Oversight / NHS	
FHWA REGION VIII OVERSIGHT?	☐ NO ■ YES
NATIONAL HIGHWAY SYSTEM?	☐ NO ■ YES

DEPARTMENT OF TRANSPORTATION
STATE OF COLORADO

HIGHWAY CONSTRUCTION BID PLANS OF ~~PROPOSED~~ FINAL
FEDERAL AID PROJECT NO. IM-0703-322
STATE HIGHWAY NO. 70
EISENHOWER/JOHNSON MEMORIAL TUNNEL
PANEL REPLACEMENT PROJECT-EJMT-South Tunnel
SUMMIT AND CLEAR CREEK COUNTIES
CONSTRUCTION PROJECT CODE NO. 16102

Related Projects:	
P. E. UNDER PROJECT:	
Project Number	IM-0703-254
Project Code:	12982
~~R.O.W. Projects:~~	
~~R.O.W. Project Description~~	

PROJECT DESCRIPTION

REMOVAL AND DISPOSAL OF EXISTING TILE BLOCK PANELS, FABRICATION AND INSTALLATION OF NEW TILE-FACED PRECAST CONCRETE PANELS, AND INCIDENTAL WORK.

TABULATION OF LENGTH & DESIGN DATA

STATION	I-70 EASTBOUND ROADWAY LIN FT	I-70 EASTBOUND MAJOR STR. LIN FT
APPROACH TO PROJECT (WEST)	5280	
BEGIN PROJECT IM-0703-322 STA. 30+97.82 EB ON I-70	500	
STRUCTURE F-13-X M.P. 213.65	8976	8976
END PROJECT IM-0703-322 STA. 130+57.28 EB ON I-70	500	
APPROACH TO PROJECT (EAST)	5280	
SUMMARY OF PROJECT LENGTH	FEET	MILES
ROADWAY (NET LENGTH)	11560	2.19
MAJOR STRUCTURE	8976	1.70
PROJECT GROSS LENGTH	20536	3.89

DESIGN DATA	
MINIMUM RADIUS OF CURVE (EXISTING)	3° 30'
MAXIMUM GRADE (EXISTING)	2.23%
MINIMUM S.S.D. HORIZONTAL (EXISTING)	350'
MINIMUM S.S.D. VERTICAL (EXISTING)	490'
MAXIMUM DESIGN SPEED	*65 MPH

* POSTED SPEED LIMIT = 50MPH

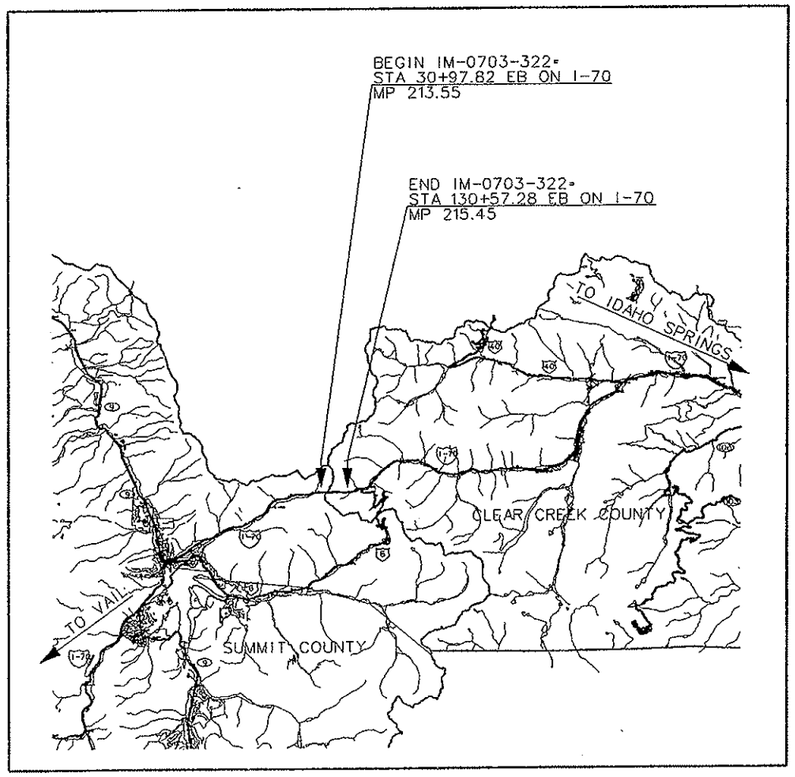

INDEX OF SHEETS

NEW AND REVISED STANDARDS

S-630-1 TRAFFIC CONTROLS FOR HIGHWAY CONSTRUCTION (03/05/2007)

Print Date: 2/14/2008	Sheet Revisions	Colorado Department of Transportation	As Constructed
File Name: EJMT_TO_01_TitleSheet.dgn	Date: / Comments / Init.	P.O. Box 399, Dumont, CO 80436, Phone: (303) 512-5750, Fax: (303) 512-5775	No Revisions:
Horiz. Scale: As Noted / Vert. Scale: As Noted		Region 1 Mountain Residency R.M.S.	Revised: 9/30/09
Unit 0221 / Unit Leader STW			Void:
PARSONS, 1700 Broadway Suite 900, Denver, CO 80290, (303) 863-7900			

Contract Information	
Contractor:	FLATIRONS CONSTRUCTORS, INC.
Resident Engineer:	MARK VESSELY
Project Engineer:	GARY KACZYNSKI
PROJECT STARTED:	6/2/08 ACCEPTED: 9/30/09
Comments:	

Project No./Code
IM-0703-322
16102
Sheet Number 1

PLAN NUMBER	NEW OR REVISED	M STANDARD TITLE	PAGE NUMBER
☐ M-100-1	☐	STANDARD SYMBOLS (3 SHEETS)	1-3
☐ M-203-1	☐	APPROACH ROADS	4
☐ M-203-2	☐	DITCH TYPES	5
☐ M-203-11	☐	SUPERELEVATION CROWNED AND DIVIDED HIGHWAYS (3 SHEETS)	6-8
☐ M-203-12	☐	SUPERELEVATION STREETS (2 SHEETS)	9-10
☐ M-206-1	☐	EXCAVATION AND BACKFILL FOR STRUCTURES (2 SHEETS)	11-12
☐ M-206-2	☐	EXCAVATION AND BACKFILL FOR BRIDGES (2 SHEETS)	13-14
☐ M-208-1	☐	TEMPORARY EROSION CONTROL (7 SHEETS)	15-21
☐ M-210-1	☐	MAILBOX SUPPORTS (2 SHEETS)	22-23
☐ M-214-1	☐	PLANTING DETAILS	24
☐ M-412-1	☐	CONCRETE PAVEMENT JOINTS (5 SHEETS)	25-29
☐ M-510-1	☐	STRUCTURAL PLATE PIPE H-20 LOADING	30
☐ M-601-1	☐	SINGLE CONCRETE BOX CULVERT (2 SHEETS)	31-32
☐ M-601-2	☐	DOUBLE CONCRETE BOX CULVERT (2 SHEETS)	33-34
☐ M-601-3	☐	TRIPLE CONCRETE BOX CULVERT (2 SHEETS)	35-36
☐ M-601-10	☐	HEADWALL FOR PIPES	37
☐ M-601-11	☐	TYPE "S" SADDLE HEADWALLS FOR PIPE	38
☐ M-601-12	☐	HEADWALLS AND PIPE OUTLET PAVING	39
☐ M-601-20	☐	WINGWALLS FOR PIPE BOX CULVERTS	40
☐ M-603-1	☐	METAL AND PLASTIC PIPE (2 SHEETS)	41-42
☐ M-603-2	☐	REINFORCED CONCRETE PIPE	43
☐ M-603-3	☐	PRECAST CONCRETE BOX CULVERT	44
☐ M-603-10	☐	CONCRETE AND METAL END SECTIONS (2 SHEETS)	45-46
☐ M-604-10	☐	INLET, TYPE C	47
☐ M-604-11	☐	INLET, TYPE D	48
☐ M-604-12	☐	CURB INLET TYPE R (2 SHEETS)	49-50
☐ M-604-13	☐	CONCRETE INLET TYPE 13	51
☐ M-604-20	☐	MANHOLES (3 SHEETS)	52-54
☐ M-604-25	☐	VANE GRATE INLETS (5 SHEETS)	55-59
☐ M-605-1	☐	SUBSURFACE DRAINS	60
☐ M-606-1	☐	GUARDRAIL TYPE 3 W-BEAM (16 SHEETS)	61-76
☐ M-606-13	☐	GUARDRAIL TYPE 7 F-SHAPE BARRIER (4 SHEETS)	77-80
☐ M-606-14	☐	PRECAST TYPE 7 CONCRETE BARRIER (3 SHEETS)	81-83

PLAN NUMBER	NEW OR REVISED	M STANDARD TITLE	PAGE NUMBER
☐ M-607-1	☐	WIRE FENCES AND GATES (3 SHEETS)	84-86
☐ M-607-2	☐	CHAIN LINK FENCE (3 SHEETS)	87-89
☐ M-607-3	☐	BARRIER FENCE	90
☐ M-607-4	☐	DEAR FENCE AND GATES (2 SHEETS)	91-92
☐ M-607-10	☐	PICKET SNOW FENCE	93
☐ M-607-15	☐	ROAD CLOSURE GATE (9 SHEETS)	94-102
☐ M-608-1	☐	CURB RAMPS (4 SHEETS)	103-106
☐ M-609-1	☐	CURBS, GUTTERS, AND SIDEWALKS (3 SHEETS)	107-109
☐ M-611-1	☐	CATTLE GUARD (2 SHEETS)	110-111
☐ M-613-1	☐	ROADWAY LIGHTING (4 SHEETS)	112-115
☐ M-614-1	☐	RUMBLE STRIPS (3 SHEETS)	116-118
☐ M-614-2	☐	SAND BARREL ARRAYS (2 SHEETS)	119-120
☐ M-615-1	☐	EMBANKMENT PROTECTOR TYPE 3	121
☐ M-615-2	☐	EMBANKMENT PROTECTOR TYPE 5	122
☐ M-616-1	☐	INVERTED SIPHON	123
☐ M-620-1	☐	FIELD LABORATORY CLASS 1	124
☐ M-620-2	☐	FIELD LABORATORY CLASS 2	125
☐ M-620-11	☐	FIELD OFFICE CLASS 1	126
☐ M-620-12	☐	FIELD OFFICE CLASS 2	127
☐ M-629-1	☐	SURVEY MONUMENTS (2 SHEETS)	128-129

PLAN NUMBER	NEW OR REVISED	S STANDARD TITLE	PAGE NUMBER
☐ S-612-1	☐	DELINEATOR INSTALLATIONS (5 SHEETS)	131-135
☐ S-614-1	☐	GROUND SIGN PLACEMENT (2 SHEETS)	136-137
☐ S-614-2	☐	CLASS I SIGNS	138
☐ S-614-3	☐	CLASS II SIGNS	139
☐ S-614-4	☐	CLASS III SIGNS (3 SHEETS)	140-142
☐ S-614-5	☐	BREAK-AWAY SIGN SUPPORT DETAILS FOR GROUND SIGNS (2 SHEETS)	143-144
☐ S-614-6	☐	CONCRETE FOOTINGS AND SIGN ISLANDS FOR CLASS III SIGNS (2 SHEETS)	145-146
☐ S-614-8	☐	TUBULAR STEEL SIGN SUPPORT DETAILS (5 SHEETS)	147-151
☐ S-614-10	☐	MARKER ASSEMBLY INSTALLATIONS	152
☐ S-614-12	☐	STRUCTURE NUMBER INSTALLATION	153
☐ S-614-14	☐	FLASHING BEACON AND SIGN INSTALLATIONS (3 SHEETS)	154-156
☐ S-614-20	☐	TYPICAL POLE MOUNT SIGN INSTALLATIONS	157
☐ S-614-21	☐	CONCRETE BARRIER SIGN POST INSTALLATIONS	158
☐ S-614-22	☐	TYPICAL MULTI-SIGN INSTALLATIONS	159
☐ S-614-40	☐	TYPICAL TRAFFIC SIGNAL INSTALLATIONS DETAILS (7 SHEETS)	160-166
☐ S-614-40A	☐	ALTERNATIVE TRAFFIC SIGNAL INSTALLATION DETAILS (5 SHEETS)	167-171
☐ S-614-50	☐	MONOTUBE OVERHEAD SIGNS (14 SHEETS)	172-185
■ S-627-1	☐	PAVEMENT MARKINGS (5 SHEETS)	186-190
☐ S-630-1	■	TRAFFIC CONTROLS FOR HIGHWAY CONSTRUCTION (12 SHEETS)	191-202
■ S-630-2	☐	BARRICADES, DRUMS, CONCRETE BARRIERS (TEMP) AND VERTICAL PANELS	203
☐ S-630-3	☐	FLASHING BEACON (PORTABLE) DETAILS	204

THE STANDARD PLAN SHEETS INDICATED HEREON BY A MARKED BOX ARE TO BE USED TO CONSTRUCT THIS PROJECT.

ALL OF THE M&S STANDARD PLANS, AS SUPPLEMENTED AND REVISED, APPLY TO THIS PROJECT WHEN USED BY DESIGNATED PAY ITEM OR SUBSIDIARY ITEM.

COLORADO
DEPARTMENT OF TRANSPORTATION

STANDARD PLANS LIST
M&S STANDARDS
JULY 4, 2006

Print Date: 2/14/2008
File Name: EJMT_TO_01_StandardPlanList.dgn
Horiz. Scale: As Noted Vert. Scale: As Noted
Unit 0221 Unit Leader STW

PARSONS
1700 Broadway Suite 900
Denver, CO 80290
(303) 863-7900

Sheet Revisions		
Date:	Comments	Init.

Colorado Department of Transportation
DOT
P.O. Box 399
Dumont, CO 80436
Phone: (303) 512-5750
Fax: (303) 512-5775
Region 1 Mountain Residency R.M.S.

As Constructed
No Revisions: 9/30/09
Revised:
Void:

EISENHOWER/JOHNSON MEMORIAL TUNNEL PANEL REPLACEMENT PROJECT
STANDARD PLANS LIST

Designer: J. BRAAKSMA
Detailer: J. SPANIER
Structure Numbers: F-13-X
Sheet Subset:
Subset Sheets:

Project No./Code
IM-0703-322
16102
Sheet Number 2

GENERAL NOTES

ALL WORK SHALL BE DONE ACCORDING TO THE STANDARD SPECIFICATIONS OF THE COLORADO DEPARTMENT OF TRANSPORTATION, APPLICABLE TO THE PROJECT.

EXPANSION JOINT MATERIAL SHALL MEET AASHTO SPECIFICATION M-213.

ALL STRUCTURAL STEEL SHALL BE AASHTO M-270 (ASTM A709), UNLESS OTHERWISE NOTED AND SHALL BE INCLUDED IN THE COST OF ITEMS LISTED IN THE "SUMMARY OF QUANTITIES."

GRADE 60 REINFORCING STEEL IS REQUIRED.

ALL REINFORCING STEEL SHALL BE NON-EPOXY COATED UNLESS OTHERWISE NOTED AND SHALL BE INCLUDED IN THE COST OF ITEMS LISTED IN THE "SUMMARY OF QUANTITIES."

THE FOLLOWING TABLE GIVES THE MINIMUM LAP SPLICE LENGTH FOR REINFORCING BARS PLACED IN ACCORDANCE WITH SUBSECTION 602.06. LENGTHS SHALL BE INCREASED BY 25% FOR BARS SPACED AT LESS THAN 6" ON CENTER.

BAR SIZE	#4	#5	#6	#7	#8	#9	#10	#11
SPLICE LENGTH FOR CLASS D CONCRETE EPOXY COATED REINFORCING BARS	1'-3"	1'-7"	2'-5"	2'-10"	3'-8"	4'-8"	5'-11"	7'-3"
SPLICE LENGTH FOR CLASS S35 CONCRETE BLACK REINFORCING BARS	1'-4"	1'-4"	1'-7"	1'-10"	2'-4"	2'-11"	3'-9"	4'-7"

CONCRETE SHALL BE SUITABLE FOR SULFATE PROTECTION AGAINST EXPOSURE CLASS 0.

ALL CONSTRUCTION JOINTS NOT SHOWN ON THE PLANS SHALL BE APPROVED BY THE ENGINEER.

THE MINIMUM COVER, MEASURED FROM THE FACE OF THE CONCRETE TO THE SURFACE OF ANY REINFORCING BAR SHALL BE 2", EXCEPT WHERE OTHERWISE NOTED.

ANY REINFORCING STEEL SPLICES NOT SHOWN SHALL BE APPROVED BY THE ENGINEER. THE SPLICE LOCATIONS SHALL BE ALTERNATED WHEN POSSIBLE.

THE CONTRACTOR SHALL BE RESPONSIBLE FOR THE STABILITY OF THE PANELS DURING CONSTRUCTION.

THE INFORMATION SHOWN ON THESE DRAWINGS CONCERNING TYPE AND LOCATION OF UTILITIES IS NOT GAURANTEED TO BE ACCURATE OR ALL INCLUSIVE. THE CONTRACTOR IS RESPONSIBLE FOR MAKING HIS OWN DETERMINATION AS TO THE TYPE AND LOCATION OF UTILITIES AS MAY BE NECESSARY TO AVOID DAMAGE TO THEM.

ALL STATIONS AND DIMENSIONS CONTAINED IN THESE PLANS ARE CALCULATED FROM THE "AS CONSTRUCTED PLANS" AND FIELD SURVEYS. THE CONTRACTOR SHALL VERIFY ALL DEPENDENT DIMENSIONS IN THE FIELD BEFORE ORDERING OR FABRICATING ANY MATERIALS OR PANELS, AND DIMENSIONS SHALL BE ADJUSTED TO MEET THE EXISTING STRUCTURE.

ANY ELECTRICAL WORK INVOLVING EXISTING TUNNEL ELECTRICAL SYSTEMS OR CONNECTION TO EXISTING TUNNEL ELECTRICAL SYSTEMS SHALL HAVE PRIOR APPROVAL OF THE TUNNEL ELECTRICIAN. THE CONTRACTOR SHALL PROVIDE A WRITTEN METHOD/PROCEDURE DETAILING EACH TYPE OF ELECTRICAL RESET, FOR TUNNEL ELECTRICIAN APPROVAL. THE CONTRACTOR SHALL COMPLY WITH ALL INSPECTION REQUIREMENTS OF ELECTRICAL WORK IMPOSED BY THE TUNNEL ELECTRICIAN. ALL ELECTRICAL RESET WORK SHALL RESULT IN REINSTALLATIONS THAT OPERATE THE SAME AS OR BETTER THAN THEIR ORIGINAL FUNCTIONS.

THE CONTRACTOR SHALL PROVIDE ALL ELECTRICAL POWER NEEDED TO PERFORM THE WORK.

ALL EXTERIOR CONCRETE CORNERS SHALL BE CONSTRUCTED WITH ¾" CHAMFERS, UNLESS OTHERWISE NOTED.

INDEX OF DRAWINGS

DESIGN DATA

TILE-FACED PRECAST CONCRETE PANELS
- LIVE LOAD : 20 POUNDS PER SQUARE FOOT
- DEAD LOAD : SELF WEIGHT
- ERECTION LOADS : BY CONTRACTOR

REINFORCED CONCRETE:
- CLASS D CONCRETE: f'c = 4,500 psi
- CLASS S35 CONCRETE: f'c = 5,000 psi
- REINFORCING STEEL: fy = 60,000 psi

STRUCTURAL STEEL:
- AASHTO M-270 (ASTM A709) GRADE 36 fy = 36,000 psi

DESIGN METHOD:
- AASHTO LRFD BRIDGE DESIGN SPECIFICATIONS, 4TH EDITION.

ABBREVIATIONS

CL = CLEAR
EW = EACH WAY
EF = EACH FACE
FF = FAR FACE
NF = NEAR FACE
CONT = CONTINUOUS
CIP = CAST-IN-PLACE
EXIST = EXISTING
EQ SPA = EQUAL SPACES
HCL = HORIZONTAL CONTROL LINE
PGL = PROFILE GRADE LINE
EL OR ELEV = ELEVATION
(TYP) = TYPICAL
CONC = CONCRETE
REINF = REINFORCING

INDEX BOOK	INDEX PAGE	INDEX SHEET	CONTRACT ITEM NO.	CONTRACT ITEM	UNIT	STRUCTURE PLAN	STRUCTURE AS CONST.	PROJECT TOTALS PLAN	PROJECT TOTALS AS CONST.
			202-06520	REMOVAL OF EXISTING WALL PANELS	L S	1		1	1
			210-00427	RESET PIPE HANDRAILING	LF	8,405		8,405	0 → SEE DA" 12/
			210-00473	RESET TV CAMERAS	EACH	12		12	2
			210-00760	RESET LUMINAIRE	EACH	128		128	128
			519-01000	EPOXY RESIN (INJECTION)	LF	1,200		1,200	541.5
			601-21004	PRECAST WALL SEGMENT (FURNISH ONLY	SF	3,513		3,513	3513
			601-25900	TILE-FACED PRECAST CONCRETE PANELS	SF	203,554		203,554	203,554
			601-40100	CONCRETE ANCHOR	EACH	410		410	0 → SEE DA" 12/
			606-00900	GUARDRAIL (SPECIAL)	LF	216		216	238.7
			625-00000	CONSTRUCTION SURVEYING	L S	1		1	1
			626-00000	MOBILIZATION	L S	1		1	1
				FORCE ACCOUNT ==========					
			700-70010	F/A MINOR CONTRACT REVISIONS	F A	1		1	SEE CMO #3
			700-70011	F/A PARTNERING	F A	1		1	0
			700-70022	F/A OJT COLORADO TRAINING PROGRAM	F A	1		1	0
			700-70028	F/A ESB PROGRAM	F A	1		1	0
			700-70002	F/A ANTICIPATED CMO	FA				
			900-00014	NEW PIPE HANDRAIL ANGLES, WALK	LS				
			900-00014	CAMERA CABINETS AND FIBER	LS		SEE CMO #2		
			900-00014	INSTALL NEW FIRE HYDRANTS	LS				
			900-00014	LOOP DETECTORS AND WIRING	LS				

Print Date: 2/14/2008	Sheet Revisions	Colorado Department of Transportation	As Constructed
File Name: EJMT_TO_01_02.dgn	Date: / Comments / Init.	DOT — P.O. Box 399, Dumont, CO 80436, Phone: (303) 512-5750, Fax: (303) 512-5775	No Revisions:
Horiz. Scale: As Noted — Vert. Scale: As Noted		Region 1 Mountain Residency R.M.S.	Revised: 12/15/09
Unit 0221 — Unit Leader STW			Void:
PARSONS — 1700 Broadway Suite 900, Denver, CO 80290, (303) 863-7900			

EISENHOWER/JOHNSON MEMORIAL TUNNEL PANEL REPLACEMENT PROJECT SUMMARY OF ~~APPROXIMATE~~ FINAL QUANTITIES			Project No./Code
Designer: J. BRAAKSMA	Structure Numbers	F-13-X	IM-0703-322
Detailer: J. SPANIER			16102
Sheet Subset:	Subset Sheets: S-2 OF S-19		Sheet Number 4

TO ESTABLISH GEOMETRIC CONTROL FOR THE CONSTRUCTION OF THIS PROJECT, THE DEPARTMENT HAS PROVIDED THE FOLLOWING INFORMATION:

	Format *
■ Horizontal Control	Plans
☐ Vertical Control	
☐ Roadway Alignment	
☐ Original Terrain Data	
☐ Other:	

* Specify the information format, ie., plan sheet, computer disk, computer printout, or other. The information marked is either contained on the plans or is available from the Engineer.

TYPE OF PROJECT

- ☐ Landscaping
- ☐ Signalization
- ☐ Safety Improvement
- ☐ Asphalt Overlay
- ☐ Concrete Overlay
- ☐ Minor Widening
- ☐ Major Reconstruction
- ☐ New Roadway Construction
- ☐ Bridge Replacement
- ☐ Bridge Widening
- ☐ New Bridge
- ■ Other: _____

SURVEY WORK TO BE PERFORMED BY OTHERS: _____

WORK PERFORMED BY THE CONTRACTOR'S SURVEYOR UNDER SECTION 625:

- ___ ☐ Establish and Maintain Project Centerline or Engineer Approved Offset Line(s)
- ___ ☐ Verification and Maintenance of Horizontal and Vertical Control
- ___ ☐ Verify or Determine existing grades and alignments
- ___ ☐ Verify or Determine existing topography
- ___ ☐ Clearing and Grubbing Limits (Section 201)
- ___ ☐ Removal Limits (Section 202)
- ___ ☐ Reset Items (Section 210)
- ___ ☐ Excavation and Embankment (Section 203)
  - ___ ☐ Excavation
    - ___ ☐ Unclassified
    - ___ ☐ Stripping
    - ___ ☐ Muck
    - ___ ☐ Rock
    - ___ ☐ Borrow
    - ___ ☐ Other: _____
    - ___ ☐ Potholing
  - ___ ☐ Embankment
  - ___ ☐ Site Grading
  - ___ ☐ Erosion Control (Perm)
  - ___ ☐ Other: _____
  - ___ ☐ As Staked Earthwork Quantities (See General Notes)

	Slope Staking (Y/N)	Grid (Y/N)	Grade Stakes	Special Interval
Excavation	-	-	-	-
	-	-	-	-
	-	-	-	-
	-	-	-	-
	-	-	-	-
	-	-	-	-
Embankment	-	-	-	-
	-	-	-	-
	-	-	-	-
	-	-	-	-

- ___ ☐ Landscaping
  - ___ ☐ Top Soil (Section 207)
  - ___ ☐ Seeding (Section 212)
  - ___ ☐ Mulching (Section 213)
  - ___ ☐ Planting (Section 214)
  - ___ ☐ Herbicide (Section 217)
  - ___ ☐ Other: _____
- ___ ☐ Erosion Control (Section 208)
  - ___ ☐ Seeding (Temp)
  - ___ ☐ Silt Fence
  - ___ ☐ Erosion Bales
  - ___ ☐ Erosion Logs
  - ___ ☐ Riprap (Temp)
  - ___ ☐ Other: _____
- ___ ☐ Roadway Bases
  - ___ ☐ Untreated Subgrade
  - ___ ☐ Treated Subgrade
  - ___ ☐ Aggregate Base Course (Section 304)
  - ___ ☐ Reconditioning
  - ___ ☐ PMBB - Plant Mix Bituminous Base
  - ___ ☐ Other: _____

	Grid (Y/N)	Grade (Y/N)	Special Interval	Special Offset
Roadway Bases	-	-	-	-
	-	-	-	-
	-	-	-	-
	-	-	-	-
	-	-	-	-
	-	-	-	-

- ___ ☐ Pavements
  - ___ ☐ HMA - Hot Mix Asphalt (Section 403)
  - ___ ☐ Concrete (Section 412)
  - ___ ☐ Heating & Scarifying Treatment
  - ___ ☐ Prime Coat, Tack Coat & Rejuvenating Agent (Section 407)
  - ___ ☐ Seal Coat or Chip Seal (Section 409)
  - ___ ☐ Other: _____

	Grid (Y/N)	Special Interval	Special Offset
Pavements	-	-	-
	-	-	-
	-	-	-
	-	-	-
	-	-	-
	-	-	-

	Tangent Interval	Curve Interval	Special Offset
Curb & Gutter	-	-	-

	Left Interval	Center Interval	Right Interval
Stationing	-	-	-

- ___ ☐ Roadway Elements
  - ___ ☐ Curb and Gutter (Section 609)
  - ___ ☐ Drop inlets - alignment and grades (Section 604)
  - ___ ☐ Retaining Walls
  - ___ ☐ Guard Rail (Section 606)
  - ___ ☐ Sidewalk (Section 608)
  - ___ ☐ Overlay Stationing
  - ___ ☐ Other: _____
- ___ ☐ Riprap (Perm) (Section 506)
- ___ ☐ Slope and Ditch Paving (Section 507)
- ___ ■ Minor Structures
  - ___ ☐ Structure Excavation limits (Section 206)
  - ___ ☐ Culverts (Section 603)
  - ___ ☐ Culverts w/ Headwalls and Wingwalls (Section 601)
  - ___ ☐ Concrete Box Culverts w/ Headwalls and Wingwalls
  - ___ ☐ Pipes (Section 603)
    - ___ ☐ Sanitary Sewer
    - ___ ☐ Storm Sewer
    - ___ ☐ Water
    - ___ ☐ Irrigation
    - ___ ☐ Miscellaneous
  - ___ ☐ Manholes (Section 604)
  - ___ ☐ Inlets (Section 604)
  - ___ ■ Other: Wall Panels
- ___ ☐ Major Structures - Overhead Signs (Section 614), Concrete Box Culverts, Bridges - and all other structures assigned a structure number
  - ___ ☐ Structure Excavation limits (Section 206)
  - ___ ☐ Concrete Box Culverts (Section 603) w/ Headwalls and Wingwalls (Section 601)
  - ___ ☐ Piling locations and cut off elevations (Section 502)
  - ___ ☐ Caisson locations and elevations (Section 503)
  - ___ ☐ Footing locations, alignment, and elevations
  - ___ ☐ Abutment/Pier locations, alignment, and elevations
  - ___ ☐ Wingwall skew angles/offsets
  - ___ ☐ Structural concrete form locations
  - ___ ☐ Substructure As-constructed survey required for Bridges (Subsection 601 .12) and Overhead signs (S-614-50)
  - ___ ☐ Bridge expansion joint(s) alignment and grade (longitudinal and transverse)
  - ___ ☐ Deck grades at Girder 10th or "n" th point locations and elevations
  - ___ ☐ Slope and Ditch Paving (Section 507)
  - ___ ☐ Other: _____
- ___ ☐ Fencing (Section 607)
  - ___ ☐ Temporary
  - ___ ☐ Permanent
  - ___ ☐ Sound Barrier
  - ___ ☐ Other: _____
- ___ ☐ Delineators (Section 612)
  - ___ ☐ Temporary
  - ___ ☐ Permanent
- ___ ☐ Lighting (Section 613) and Traffic Control Devices (Permanent) (Section 614)
  - ___ ☐ Signal pole locations and elevations
  - ___ ☐ Light pole locations and elevations
  - ___ ☐ Sign locations
  - ___ ☐ Field verify sign post locations, elevations, and lengths before fabrication.
  - ___ ☐ Other: _____
- ___ ☐ Pavement Marking (Section 627)
  - ___ ☐ Striping (Temp)
  - ___ ☐ Striping (Perm)
  - ___ ☐ Symbols
  - ___ ☐ Other: _____
- ___ ☐ Temporary Lighting and Construction Traffic Control Devices (Section 630)
  - ___ ☐ Signal pole locations and elevations (Temp)
  - ___ ☐ Light pole locations and elevations (Temp)
  - ___ ☐ Sign Locations (Temp)
  - ___ ☐ Other: _____
- ___ ☐ Easements (Temp Staking by P.L.S. Only)
- ___ ☐ Right of Way (Temp Staking by P.L.S. Only)

WORK PERFORMED BY THE CONTRACTOR'S SURVEYOR UNDER SECTION 629:

- ___ ☐ Monumentation (Section 629)
  - ___ ☐ Control
  - ___ ☐ Right of Way
  - ___ ☐ Land corners, Aliquot corners
  - ___ ☐ Easements
  - ___ ☐ Reference the specified existing monuments: ** _____
  - ___ ☐ Replace the specified existing monuments: ** _____
  - ___ ☐ Locate monuments. It is estimated ___hours are required.

NOTE: All 629 items shall include adequate research, calculations, and evaluations of evidence for monuments to be set.

** A Tabulation of Survey Monuments may be provided on the plans.

GENERAL NOTES:

1. Unless indicated otherwise on this Survey Tabulation Sheet, all survey work and staking intervals shall be done in accordance with the latest edition of the CDOT Survey Manual.
2. Adequate information for establishing lines, grades, and locations for all work items have been specified on the plans. Any additional information required to stake the item or element shall be generated by the Contractor's surveyor.
3. The Contractor's surveyor shall provide an estimate of the man-hours necessary to complete the work items indicated on this sheet. A copy of this sheet, with the estimated man-hours written on the blank line to the left of the specified items, shall be submitted with the Survey Schedule to the Engineer _____ days prior to the Presurvey Conference - Construction Survey.
4. Stakes and Monuments which are damaged or destroyed by the progress of construction shall be replaced by the Contractor at no additional cost to the Department.
5. The Contractor shall furnish an As Staked earthwork quantity to the Engineer prior to completion of twenty percent (20%) of the planned earthwork in any phase as per the CDOT Survey Manual. A printed copy of the As Staked earthwork data and a computer disk in the specified format shall be submitted to the Engineer. The Contractor shall field verify original ground cross sections at a maximum 500 feet intervals.
6. Prior to beginning work on any subsequent operation, such as placing base course or paving, the Contractor shall certify in writing to the Engineer that the final grade is within specified tolerance.
7. The Contractor's surveyor shall perform all field surveying and calculations necessary to tie plan grades into field grades.
8. The Contractor shall coordinate construction staking on the project with any utility work.
9. Fieldbooks shall contain daily records of points set and or measurements observed. The information recorded shall contain: date, crew members' names, point no., description, staking information, and sketches. If the survey information is collected electronically, information recorded shall be provided to the Project Engineer in a hard copy format that is intuitive, clear and related to the supplemental information recorded in the field books. All linear surveys, such as slope stakes and blue tops, shall have the station and offset information related to the measured information. Non-linear surveys such as structures staking shall have sketches relating electronic information, such as point numbers, to the sketch.
10. The Contractor's surveyor shall submit the following fieldbooks to the Engineer:
    - ☐ Horizontal Control (Primary & Secondary)
    - ☐ Vertical Control (i.e. Benchmarks)
    - ☐ Property Pin Ties
    - ☐ Horizontal Alignment
    - ☐ Grading
    - ☐ Slope Staking
    - ■ Minor Structures
    - ☐ Major Structures
    - ☐ One fieldbook for each work category shown on this sheet
    - ☐ Other Fieldbook(s): _____

Print Date: 02/14-08			
File Name: 16102SURV_Tab.dgn			
Horiz. Scale: 1:1	Vert. Scale: As Noted	R-X	
Unit Information	Unit Leader Initials		

Sheet Revisions

Date:	Comments	Init.

As Constructed

No Revisions: 9/30/09

Revised:

Void:

SURVEY TABULATION SHEET

Designer:	B. Claybrook	Structure Numbers	F-13-X
Detailer:	B. Claybrook		
Sheet Subset:		Subset Sheets:	1 of 1

Project No./Code
IM 0703-322
16102
Sheet Number

claybrookb 3:05:53 PM C:\Projects\16102\Design\Drawings\16102SURV_Tab.dgn

UTILITIES
CDOT
U.S. WEST
XCEL (ELECTRIC)

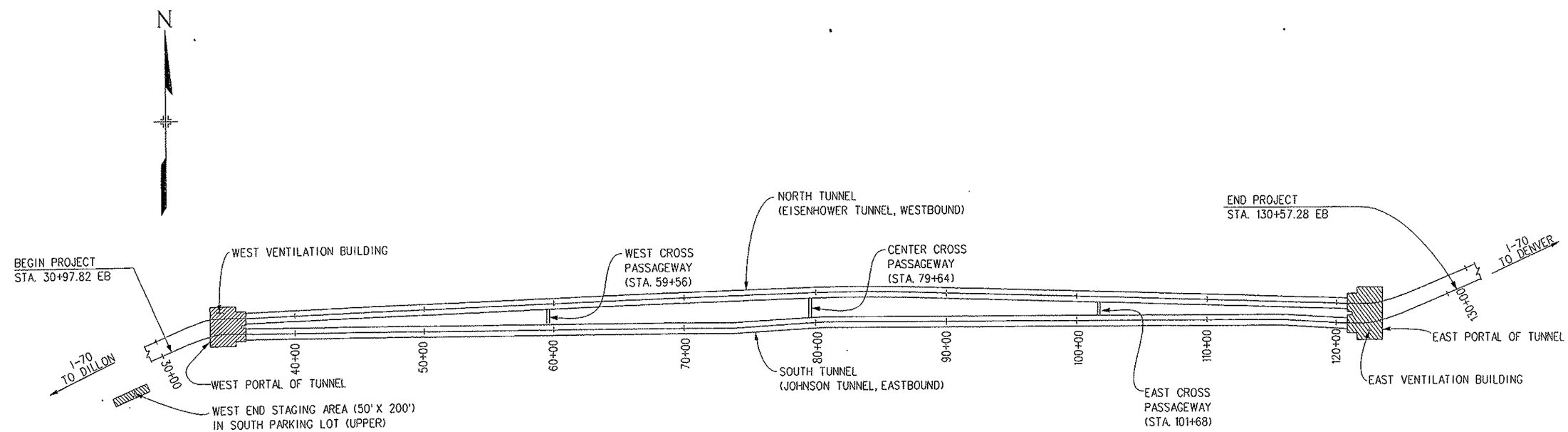

SITE PLAN
(NOT TO SCALE)

NOTES:
1. THE STAGING AREAS, IF USED, SHALL BE DEFINED WITH EIGHT FOOT HIGH CHAIN LINK FENCING. LOCKING GATES SHALL BE PROVIDED FOR ACCESS. COST OF FENCING SHALL BE INCIDENTAL TO THE COST OF THE PROJECT.
2. THE FINAL LOCATION OF STAGING AREAS SHALL BE APPROVED BY THE ENGINEER.
3. NO STORAGE WILL BE ALLOWED WITHIN THE TUNNEL FACILITIES.

Print Date: 2/14/2008	Sheet Revisions	Colorado Department of Transportation	As Constructed	EISENHOWER/JOHNSON MEMORIAL TUNNEL PANEL REPLACEMENT PROJECT		Project No./Code
File Name: EJMT_TO_01_03.dgn	Date: / Comments / Init.	P.O. Box 399, Dumont, CO 80436, Phone: (303) 512-5750, Fax: (303) 512-5775	No Revisions: 9/30/09	SITE PLAN		IM-0703-322
Horiz. Scale: As Noted / Vert. Scale: As Noted		Region 1 Mountain Residency R.M.S.	Revised:	Designer: J. BRAAKSMA / Structure Numbers: F-13-X		16102
Unit 0221 / Unit Leader STW			Void:	Detailer: J. SPANIER		Sheet Number 6
PARSONS 1700 Broadway Suite 900, Denver, CO 80290, (303) 863-7900				Sheet Subset:	Subset Sheets: S-4 of S-19	

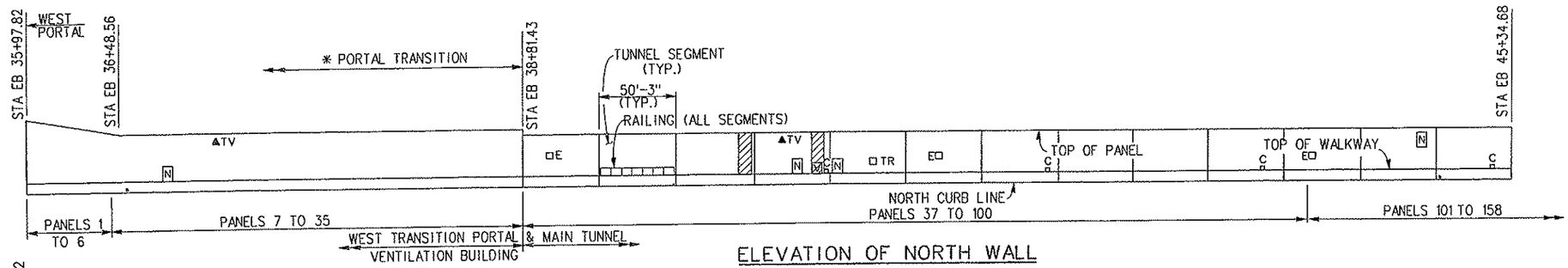

ELEVATION OF NORTH WALL

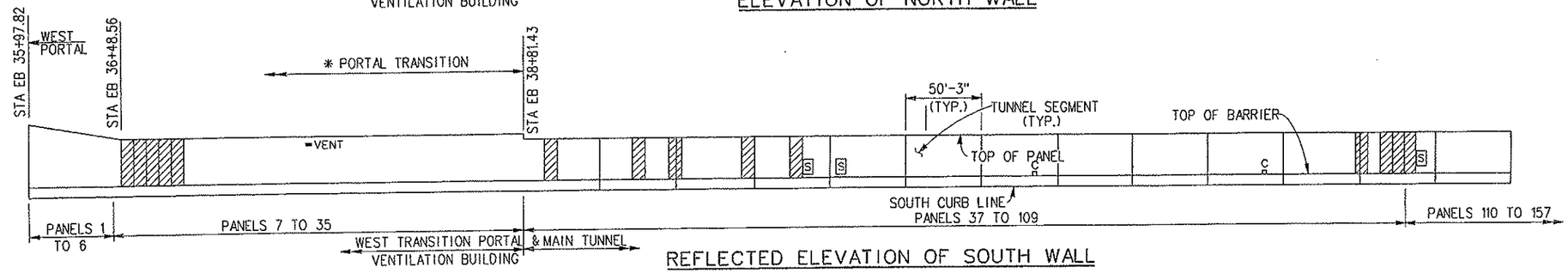

REFLECTED ELEVATION OF SOUTH WALL

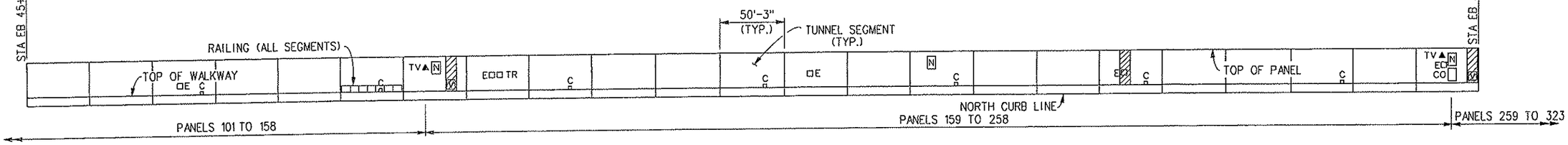

ELEVATION OF NORTH WALL

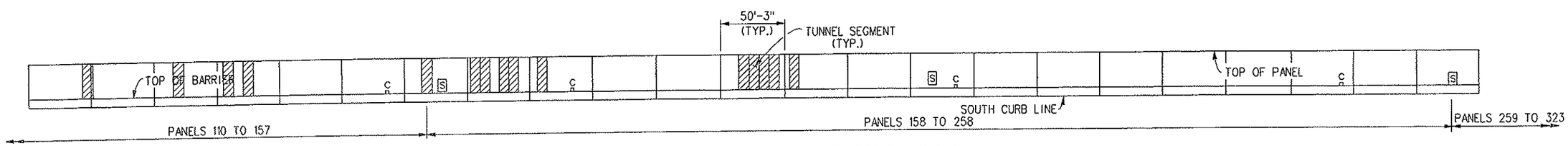

REFLECTED ELEVATION OF SOUTH WALL

LEGEND:

EB	EAST BOUND
N	NORTH WALL PULLBOX DISTRIBUTION STATION
S	SOUTH WALL PULLBOX DISTRIBUTION STATION
E	FIRE EXTINGUISHER CABINET
TV	TELEVISION CAMERA
	PANELS ALREADY REPLACED
TR	TUNNEL EMERGENCY REPORTING TELEPHONE RECESS
CO	CARBON MONOXIDE ANALYZER CABINET
C	DRAIN CLEANOUT COVER PLATE
V	VARIABLE MESSAGE SIGN CABINET

NOTES:

1. * PANEL HEIGHT TRANSITIONS AT PORTALS. CONTRACTOR IS RESPONSIBLE FOR THE DETERMINATION OF PANEL HEIGHTS AND WIDTHS. THE MAXIMUM SINGLE PANEL HEIGHT IS 15'-4". FOR HEIGHTS IN EXCESS OF 15'-4", SEE DOUBLE PANEL CONNECTION DETAILS ON SHEET S-13.
2. DIMENSIONS AND STATIONS TAKEN AT CENTERLINE OF ROADWAY.
3. LOCATIONS OF UTILITIES SHOWN ARE FOR REFERENCE ONLY.
4. PANEL LOCATIONS SHOWN ARE FOR THE EXISTING PANELS.

Print Date: 2/14/2008	Sheet Revisions	Colorado Department of Transportation	As Constructed
File Name: EJMT_TO_01_04.dgn	Date: / Comments / Init.	P.O. Box 399, Dumont, CO 80436, Phone: (303) 512-5750, Fax: (303) 512-5775	No Revisions: 9/30/09
Horiz. Scale: As Noted / Vert. Scale: As Noted		Region 1 Mountain Residency R.M.S.	Revised:
Unit 0221 / Unit Leader STW			Void:
PARSONS 1700 Broadway Suite 900, Denver, CO 80290, (303) 863-7900			

EISENHOWER/JOHNSON MEMORIAL TUNNEL PANEL REPLACEMENT PROJECT
SOUTH TUNNEL SCHEMATIC PANEL LAYOUT (WEST PORTAL TO STA.56+90.43)

Designer: J. BRAAKSMA	Structure Numbers	F-13-X	Project No./Code: IM-0703-322
Detailer: J. SPANIER			16102
Sheet Subset:	Subset Sheets: S-5 of S-19		Sheet Number 7

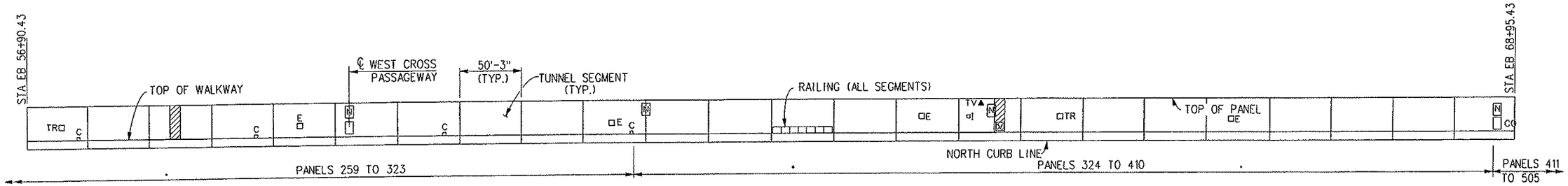

ELEVATION OF NORTH WALL

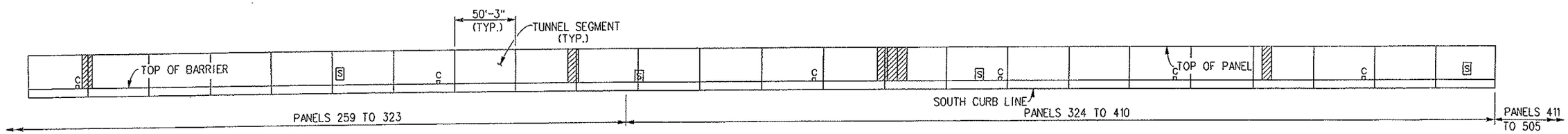

REFLECTED ELEVATION OF SOUTH WALL

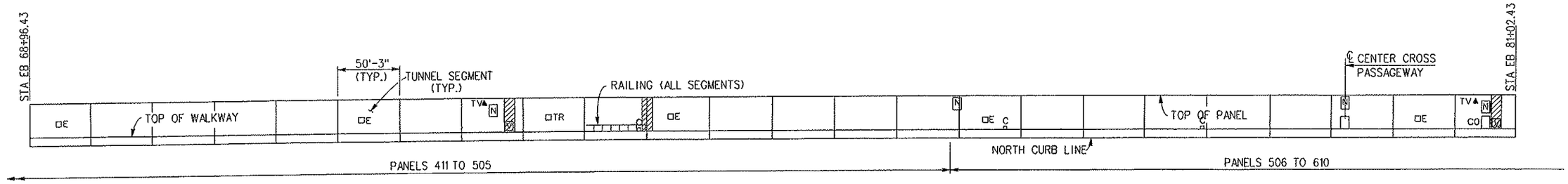

ELEVATION OF NORTH WALL

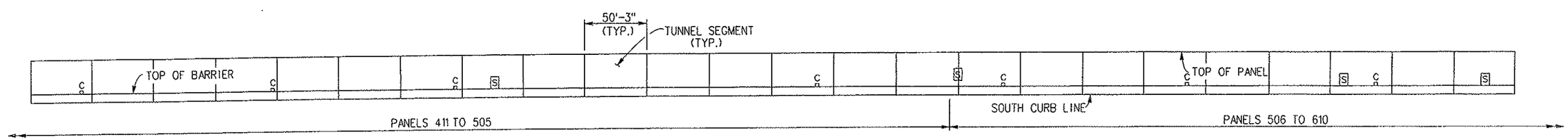

REFLECTED ELEVATION OF SOUTH WALL

NOTES:

1. FOR SOUTH TUNNEL PANEL LAYOUT NOTES AND LEGEND, SEE SHEET S-5.

Print Date: 2/14/2008	Sheet Revisions	Colorado Department of Transportation	As Constructed
File Name: EJMT_TO_01_05.DGN	Date: / Comments / Init.	P.O. Box 399, Dumont, CO 80436, Phone: (303) 512-5750, Fax: (303) 512-5775	No Revisions: 9/30/09
Horiz. Scale: As Noted / Vert. Scale: As Noted		Region 1 Mountain Residency R.M.S.	Revised:
Unit 0221 / Unit Leader STW			Void:
PARSONS, 1700 Broadway Suite 900, Denver, CO 80290, (303) 863-7900			

EISENHOWER/JOHNSON MEMORIAL TUNNEL PANEL REPLACEMENT PROJECT SOUTH TUNNEL SCHEMATIC PANEL LAYOUT (STA.56+90.43 TO STA.81+02.43)			Project No./Code
Designer: J. BRAAKSMA	Structure Numbers	F-13-X	IM-0703-322
Detailer: J. SPANIER			16102
Sheet Subset:	Subset Sheets: S-6 of S-19		Sheet Number 8

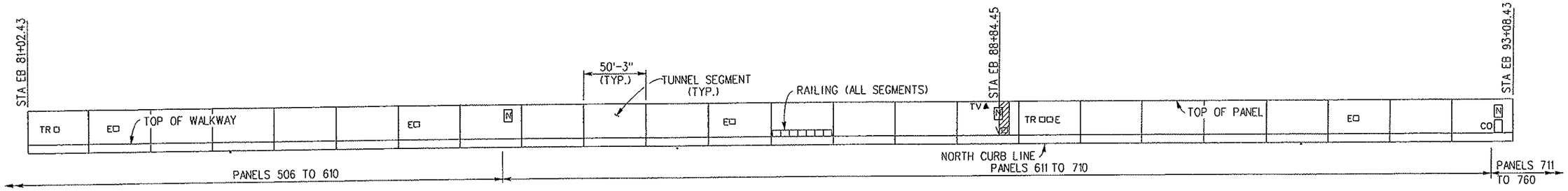

ELEVATION OF NORTH WALL

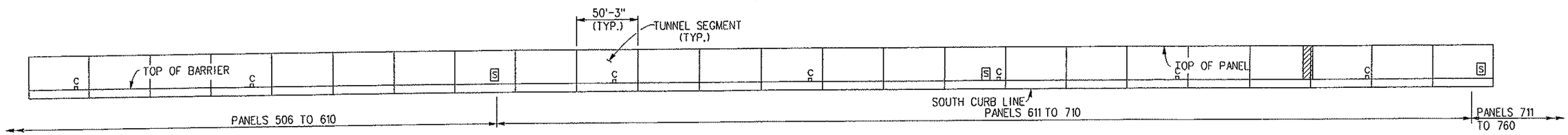

REFLECTED ELEVATION OF SOUTH WALL

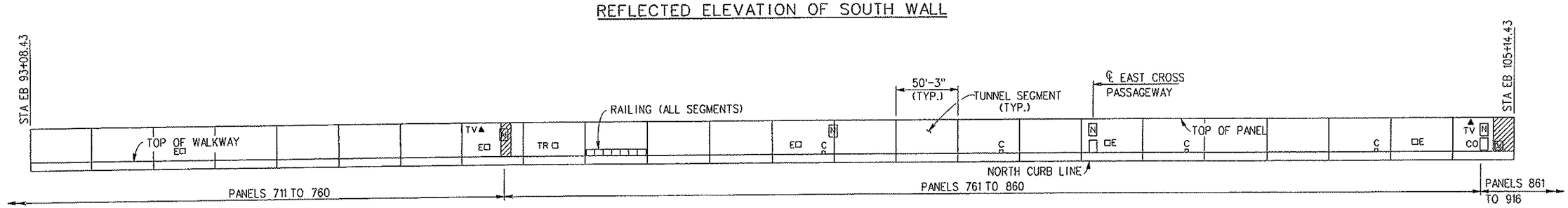

ELEVATION OF NORTH WALL

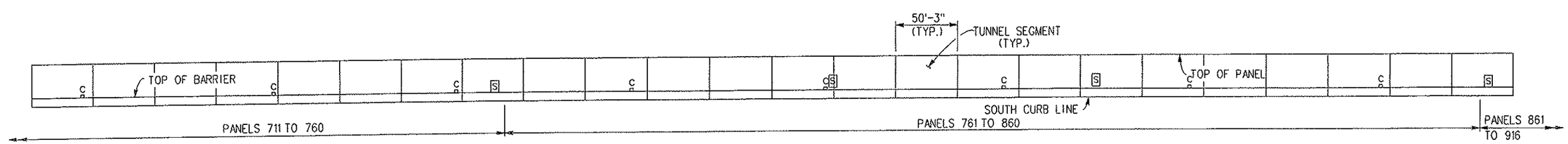

REFLECTED ELEVATION OF SOUTH WALL

NOTES:

1. FOR SOUTH TUNNEL PANEL LAYOUT NOTES AND LEGEND, SEE SHEET S-5.

Print Date: 2/14/2008	Sheet Revisions	Colorado Department of Transportation	As Constructed
File Name: EJMT_TO_01_06.DGN	Date: / Comments / Init.	P.O. Box 399, Dumont, CO 80436, Phone: (303) 512-5750, Fax: (303) 512-5775	No Revisions: 9/30/09
Horiz. Scale: As Noted / Vert. Scale: As Noted		Region 1 Mountain Residency R.M.S.	Revised:
Unit 0221 / Unit Leader STW			Void:
PARSONS, 1700 Broadway Suite 900, Denver, CO 80290, (303) 863-7900			

EISENHOWER/JOHNSON MEMORIAL TUNNEL PANEL REPLACEMENT PROJECT SOUTH TUNNEL SCHEMATIC PANEL LAYOUT (STA.81+02.43 TO STA.105+14.43)			Project No./Code
Designer: J. BRAAKSMA	Structure Numbers	F-13-X	IM-0703-322
Detailer: J. SPANIER			16102
Sheet Subset:	Subset Sheets: S-7 of S-19		Sheet Number 9

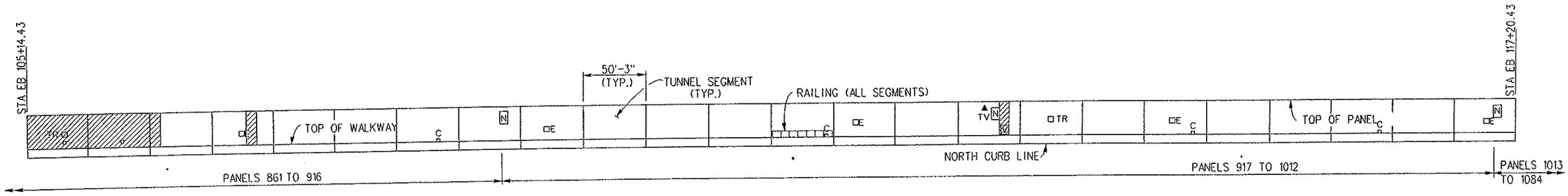

ELEVATION OF NORTH WALL

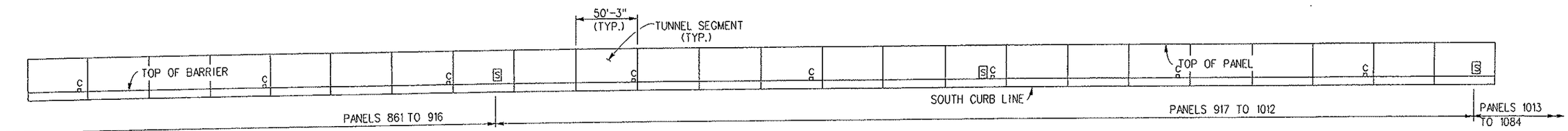

REFLECTED ELEVATION OF SOUTH WALL

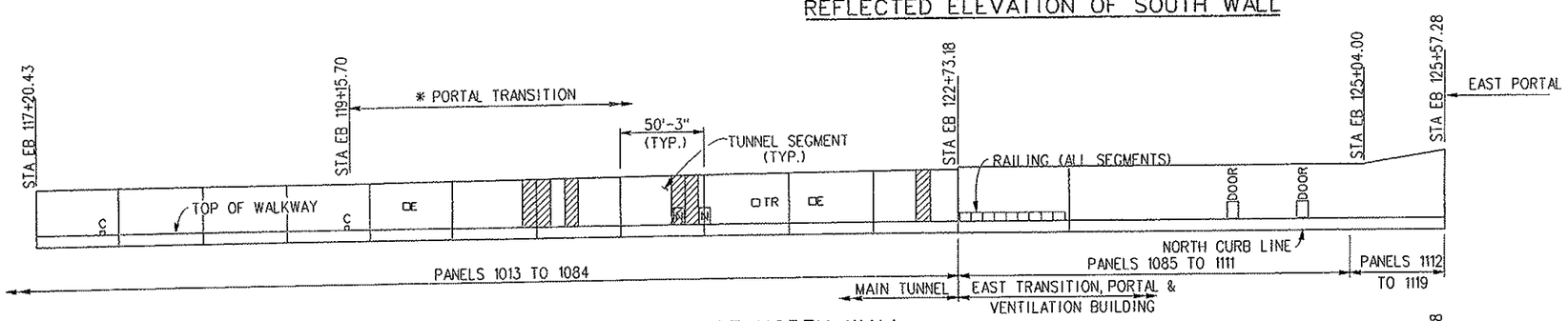

ELEVATION OF NORTH WALL

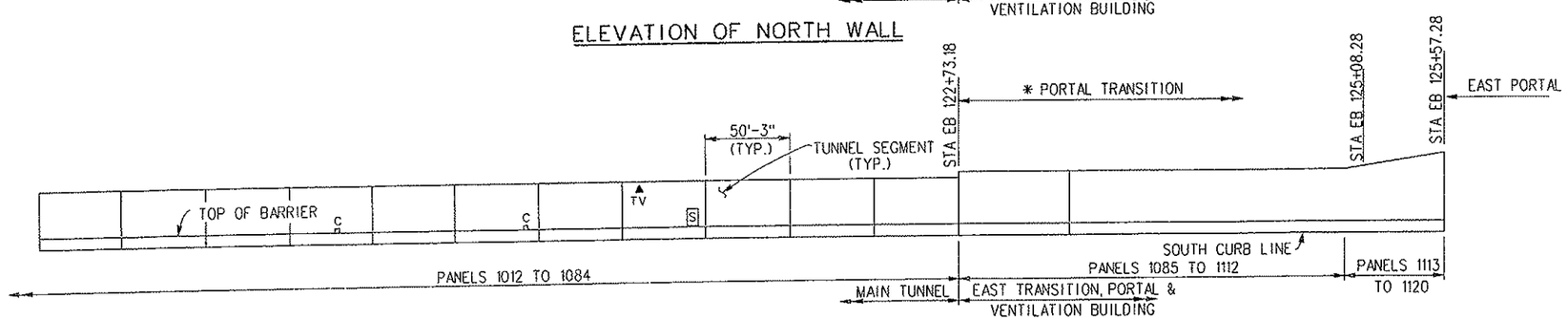

REFLECTED ELEVATION OF SOUTH WALL

NOTES:

1. FOR SOUTH TUNNEL PANEL LAYOUT NOTES AND LEGEND, SEE SHEET S-5.

Print Date: 2/14/2008	Sheet Revisions	Colorado Department of Transportation	As Constructed	EISENHOWER/JOHNSON MEMORIAL TUNNEL PANEL REPLACEMENT PROJECT	Project No./Code
File Name: EJMT_TO_01_07.DGN	Date: / Comments / Init.	P.O. Box 399, Dumont, CO 80436, Phone: (303) 512-5750, Fax: (303) 512-5775	No Revisions: 9/30/09	SOUTH TUNNEL SCHEMATIC PANEL LAYOUT (STA.105+14.43 TO EAST PORTAL)	IM-0703-322
Horiz. Scale: As Noted / Vert. Scale: As Noted			Revised:	Designer: J. BRAAKSMA / Structure Numbers: F-13-X	16102
Unit 0221 / Unit Leader STW			Void:	Detailer: J. SPANIER	
PARSONS 1700 Broadway Suite 900, Denver, CO 80290, (303) 863-7900		Region 1 Mountain Residency R.M.S.		Sheet Subset: / Subset Sheets: S-8 of S-19	Sheet Number 10

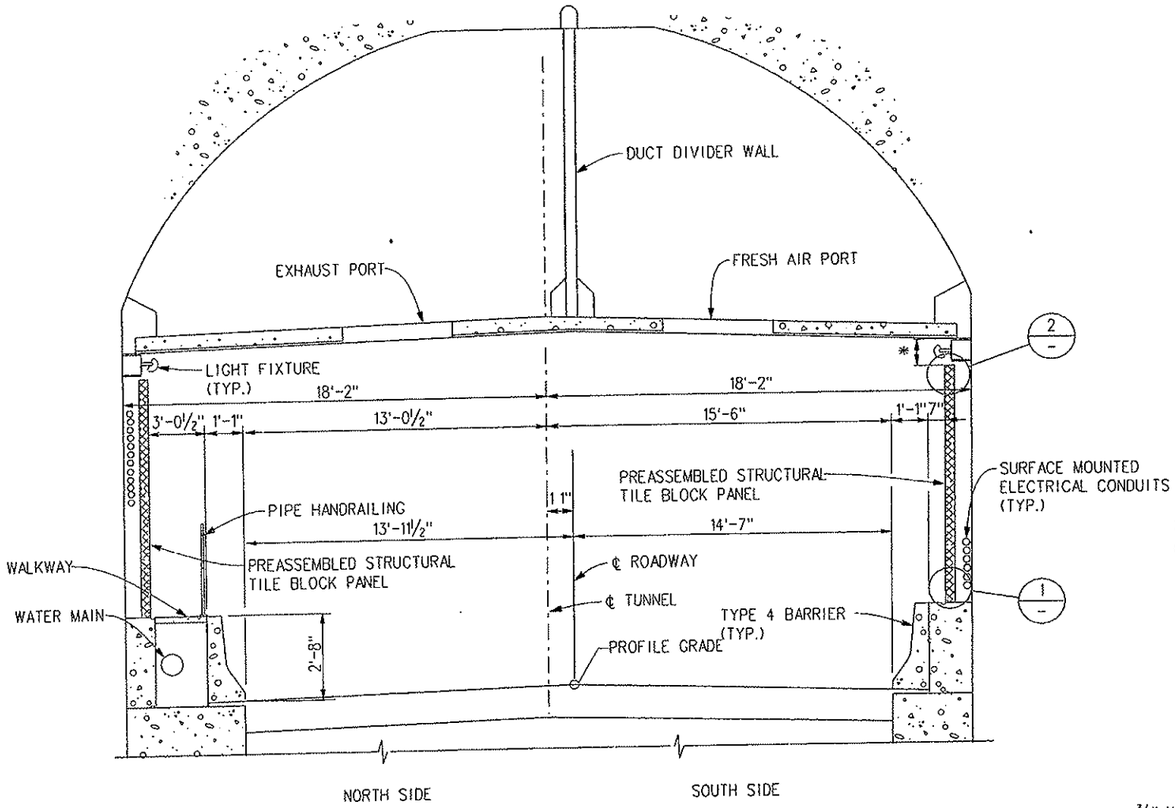

TYPICAL SOUTH TUNNEL CROSS SECTION

(LOOKING EAST)

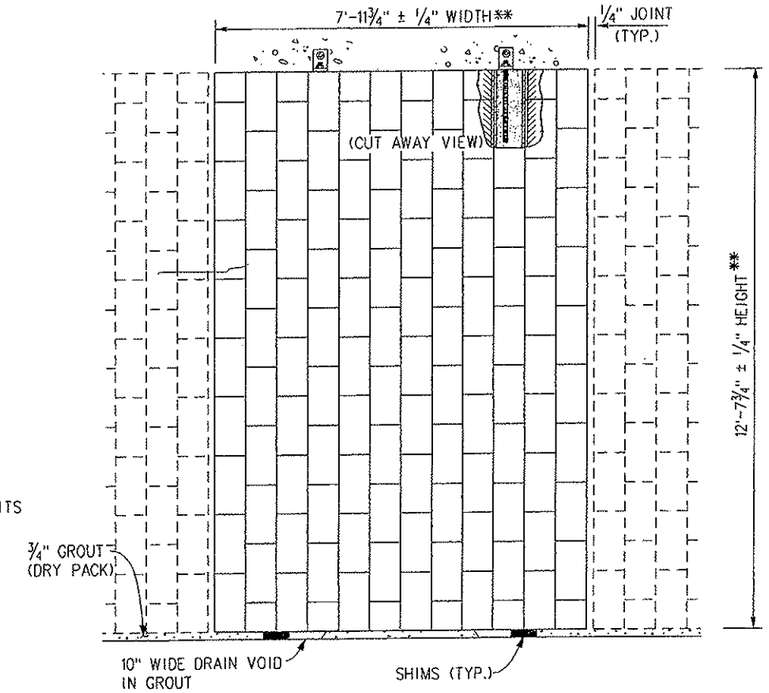

TYPICAL TILE BLOCK PANEL

(SOUTH TUNNEL)

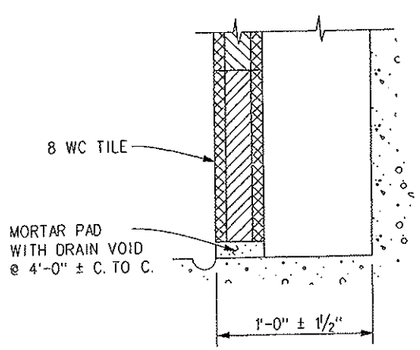

TYPICAL SECTION (1)

PANEL CONNECTION @ BOTTOM

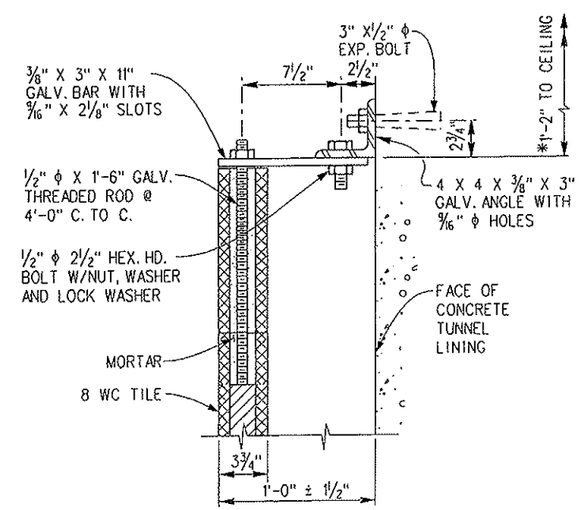

TYPICAL SECTION (2)

PANEL CONNECTION @ TOP

NOTES:

1. PANELS ARE NORMAL TO ROADWAY PROFILE GRADE.
2. ** PANEL HEIGHTS VARY IN TRANSITION AREAS AND PORTALS.
3. PANELS AT UTILITY BLOCKOUTS VARY.
4. * 1'-2" CLEARANCE TYPICAL. LIGHTS ARE MOUNTED ON PANELS IN TRANSITION AREAS.
5. DURING PANEL REMOVAL, ALL ANCHOR BOLTS FOR EXISTING TILE BLOCK PANELS SHALL BE CUT OFF TO ¼" BELOW CONCRETE TUNNEL LINING AND THE HOLE SHALL BE PATCHED WITH EPOXY GROUT.
6. DURING PANEL REMOVAL, THE WALKWAY AND BARRIER SHALL BE PROTECTED FROM DAMAGE. THE METHOD OF PROTECTION SHALL BE SUBMITTED TO THE ENGINEER FOR REVIEW AND APPROVAL.
7. TILE BLOCK PANELS THAT HAVE BEEN REPLACED WITH TILE FACED PRECAST CONCRETE PANELS SHALL BE LEFT IN PLACE UNLESS NOTED OTHERWISE.

Print Date: 2/14/2008	Sheet Revisions	Colorado Department of Transportation	As Constructed
File Name: EJMT_TO_01_08.DGN	Date: / Comments / Init.	P.O. Box 399, Dumont, CO 80436, Phone: (303) 512-5750, Fax: (303) 512-5775	No Revisions: 9/30/09
Horiz. Scale: As Noted / Vert. Scale: As Noted		Region 1 Mountain Residency R.M.S.	Revised:
Unit 0221 / Unit Leader STW			Void:
PARSONS, 1700 Broadway Suite 900, Denver, CO 80290, (303) 863-7900			

EISENHOWER/JOHNSON MEMORIAL TUNNEL PANEL REPLACEMENT PROJECT			Project No./Code
SOUTH TUNNEL TYPICAL SECTIONS (EXISTING) (1)			IM-0703-322
Designer: J. BRAAKSMA	Structure Numbers	F-13-X	16102
Detailer: J. SPANIER			
Sheet Subset:	Subset Sheets: S-9 of S-19		Sheet Number 11

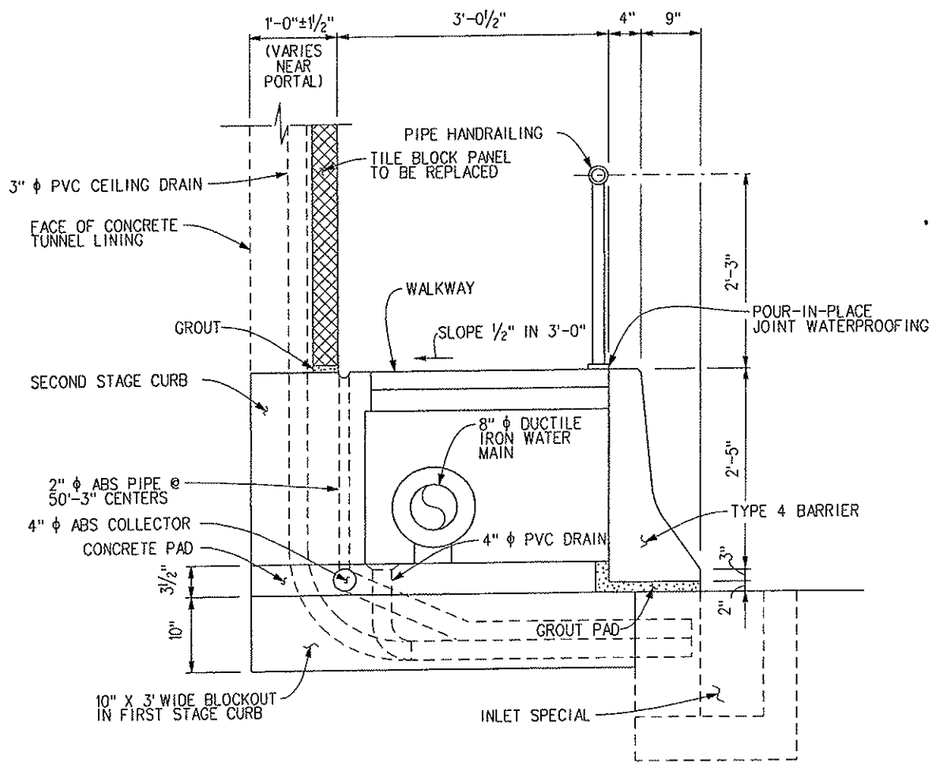

SECTION @ NORTH CURB

(LOOKING EAST)

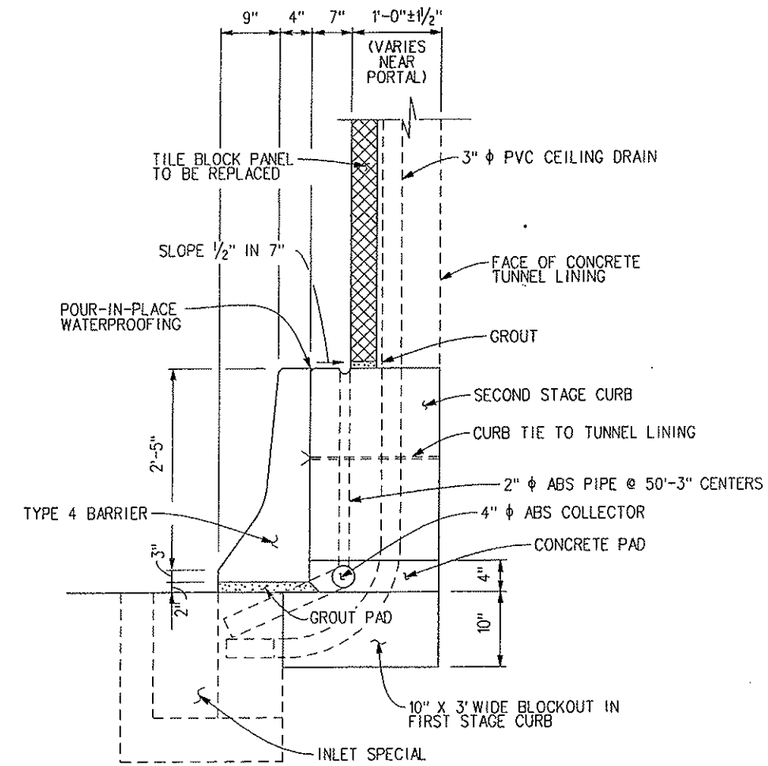

SECTION @ SOUTH CURB

(LOOKING EAST)

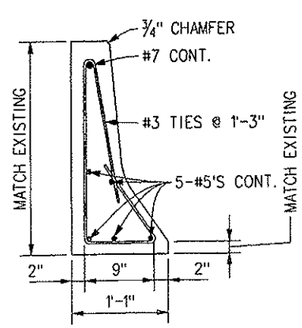

TYPICAL GUARDRAIIL (SPECIAL) SECTION

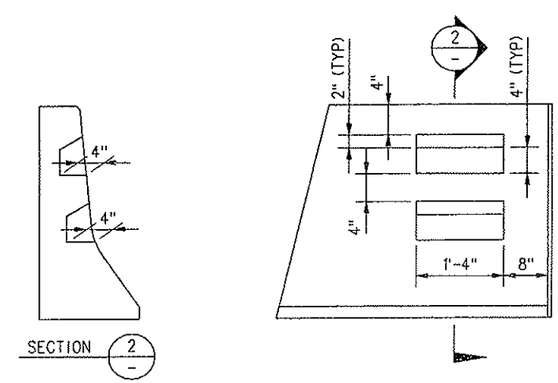

TYPICAL STEP BLOCKOUT

NOTES:

1. SECTIONS SHOWN AT NORTH AND SOUTH CURB APPLY TO EXISTING BARRIER AND TO REPLACEMENT BARRIER [GUARDRAIL (SPECIAL)]. AS-CONSTRUCTED DIMENSIONS VARY SLIGHTLY FROM THOSE SHOWN. GUARDRAIL (SPECIAL) SHALL BE CONSTRUCTED COMPLETE WITH HARDWARE TO JOIN THE REPLACEMENT SECTIONS TO THE STRUCTURE BEHIND THEM.
2. ALL GUARDRAIL (SPECIAL) REINFORCING SHALL BE EPOXY COATED REINFORCING. CURB TIES TO THE TUNNEL LINING SHALL BE AT MAXIMUM 4 FOOT INTERVALS ALONG THE LENGTH OF THE BARRIER. THE CONTRACTOR SHALL PROPOSE THE TYPE OF CURB TIE TO BE USED, FOR REVIEW AND APPROVAL BY THE ENGINEER.
3. POUR-IN PLACE MASTIC JOINT WATERPROOFING SHALL BE USED AT TOP OF REPLACEMENT BARRIER [GUARDRAIL (SPECIAL)] AS SHOWN IN EXISTING SECTIONS. WHERE REPLACEMENT BARRIER [GUARDRAIL (SPECIAL)] ABUTS EXISTING BARRIER, 1/2" EXPANSION JOINT MATERIAL SHALL BE PLACED BETWEEN FACES, RECESSED 1/2", AND SEALED AGAINST INTRUSION OF SURFACE WATER BY A WATERPROOF JOINT SEALER APPROVED BY THE ENGINEER. COST OF JOINT WATERPROOFING, EXPANSION JOINT MATERIAL, AND JOINT SEALER SHALL BE INCLUDED IN THE COST OF GUARDRAIL (SPECIAL) AND WILL NOT BE PAID FOR SEPARATELY.
4. STEPS IN GUARDRAIL (SPECIAL) SHALL BE FORMED TO MATCH LOCATION OF EXISTING STEPS.
5. FOR ADDITIONAL NOTES SEE SHEET S-9.

Print Date: 2/14/2008	Sheet Revisions	Colorado Department of Transportation	As Constructed
File Name: EJMT_TO_01_09.DGN	Date: / Comments / Init.	P.O. Box 399, Dumont, CO 80436, Phone: (303) 512-5750, Fax: (303) 512-5775	No Revisions: 9/30/09
Horiz. Scale: As Noted / Vert. Scale: As Noted		Region 1 Mountain Residency R.M.S.	Revised:
Unit 0221 / Unit Leader STW			Void:
PARSONS 1700 Broadway Suite 900, Denver, CO 80290, (303) 863-7900			

EISENHOWER/JOHNSON MEMORIAL TUNNEL PANEL REPLACEMENT PROJECT			Project No./Code
SOUTH TUNNEL TYPICAL SECTIONS (EXISTING) (11)			IM-0703-322
Designer: J. BRAAKSMA	Structure Numbers	F-13-X	16102
Detailer: J. SPANIER			
Sheet Subset:	Subset Sheets: S-10 of S-19		Sheet Number 12

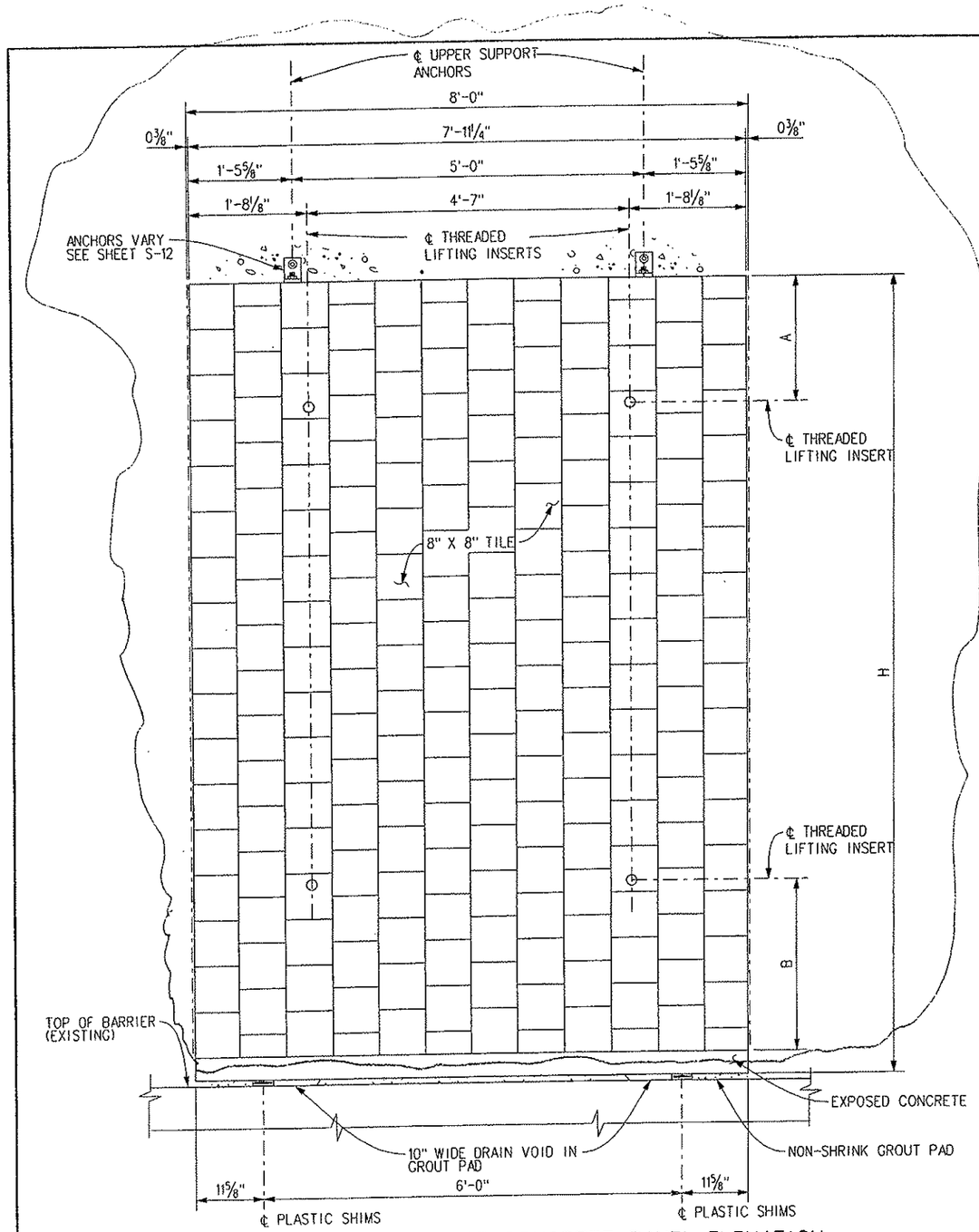

TYPICAL TILE-FACED PRECAST CONCRETE PANEL ELEVATION

SEE SHEET 13A FOR ACCEPTED TYPICALS

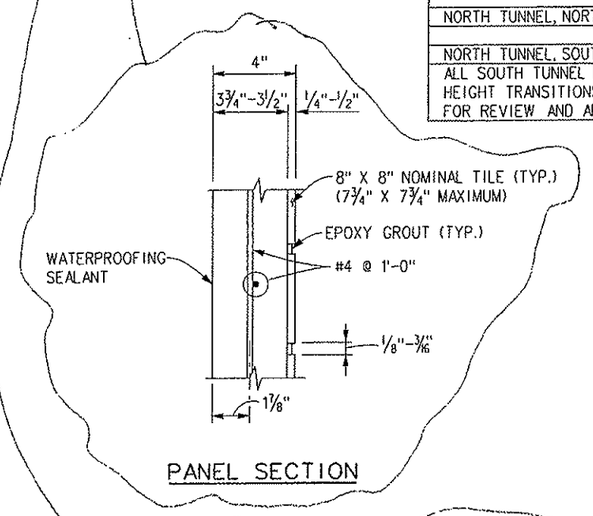

PANEL SECTION

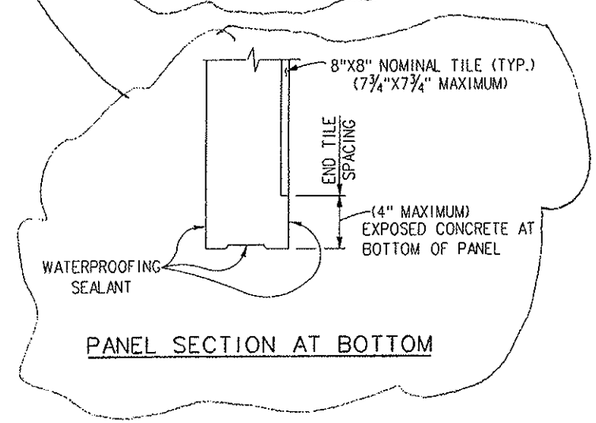

PANEL SECTION AT BOTTOM

TABLE OF PANEL HEIGHTS

LOCATION	PANELS	H*	A	B	COMMENTS
SOUTH TUNNEL, NORTH WALL	1 - 6	VARIES 17'-5" TO 13'-9"	2'-10"	2'-10"	PORTAL
	7 - 35	13'-9"	2'-10"	2'-10"	TRANSITION AREA
	36 - 1044	11'-8"	1'-10"	2'-6"	INTERIOR ZONE
	1045 - 1084	VARIES 11'-8" TO 13'-0"	1'-10"	2'-6"	INTERIOR ZONE
	1085 - 1111	15'-4"	2'-10"	2'-10"	TRANSITION AREA
	1112 - 1119	VARIES 15'-4" TO 20'-8"	2'-10"	2'-10"	PORTAL
SOUTH TUNNEL, SOUTH WALL	1 - 6	VARIES 19'-4" TO 15'-4"	2'-10"	2'-10"	PORTAL
	7 - 35	VARIES 15'-4" TO 14'-0"	2'-10"	2'-10"	TRANSITION AREA
	36 - 1084	11'-8"	1'-10"	2'-6"	INTERIOR ZONE
	1085 - 1112	14'-0"	2'-10"	2'-10"	TRANSITION AREA
	1113 - 1120	VARIES 14'-0" TO 18'-8"	2'-10"	2'-10"	PORTAL
SOUTH TUNNEL		11'-8"	1'-10"	2'-6"	20 TOTAL SPARE PANELS
NORTH TUNNEL, NORTH WALL		10'-10½"	1'-10"	2'-6"	10 TOTAL SPARE PANELS
NORTH TUNNEL, SOUTH WALL		10'- 0½"	1'-10"	2'-6"	10 TOTAL SPARE PANELS

ALL SOUTH TUNNEL PANEL DIMENSIONS, INCLUDING ACCOMMODATIONS FOR ALL OPENINGS AND HEIGHT TRANSITIONS, SHALL BE VERIFIED BY THE CONTRACTOR AND SUBMITTED TO THE ENGINEER FOR REVIEW AND APPROVAL BEFORE PANEL FABRICATION.

* MAXIMUM SINGLE PANEL HEIGHT SHALL BE 15'-4".

NOTES:

1. TYPICAL TILE-FACED PRECAST CONCRETE PANEL SHOWN. DIMENSIONS VARY FOR NON-TYPICAL TILE-FACED PRECAST CONCRETE PANELS.
2. PANEL HEIGHTS VARY, SEE TABLE OF PANEL HEIGHTS FOR DETAILS.
3. COST OF MISCELLANEOUS STEEL, SHIMS, REINFORCEMENT, AND GROUT PAD SHALL BE INCLUDED IN THE COST OF TILE-FACED PRECAST CONCRETE PANELS.
4. FILL LIFTING INSERT OPENING WITH SCREW-IN TYPE PLASTIC PLUG SET IN AN APPROVED SILICONE SEALANT AFTER INSTALLATION OF PANEL. PLUG COLOR SHALL MATCH CERAMIC TILE FACE COLOR. SURFACE OF PLASTIC PLUG SHALL BE FLUSH WITH SURFACE OF PANEL FACE. PROVIDE 200 ADDITIONAL PLASTIC PLUGS PRIOR TO PROJECT COMPLETION. COST OF PLASTIC PLUGS SHALL BE INCLUDED IN THE COST OF TILE-FACED PRECAST CONCRETE PANELS.
5. CUT TILE AS REQUIRED TO MATCH BOTH VERTICAL AND HORIZONTAL PANEL DIMENSIONS. FINAL TILE LAYOUT AND SPACING SHALL BE SUBMITTED TO THE ENGINEER FOR CONCEPTUAL REVIEW AND APPROVAL.
6. REMOVE EXISTING GROUT PAD AT PANEL BASE PRIOR TO INSTALLATION OF THE PANEL.
7. PLACE PANELS SO THAT THE CENTERLINE OF THE JOINT BETWEEN THE PANELS IS NORMAL TO THE ROADWAY GRADE.
8. PRIOR TO DRILLING UPPER ANCHORS, SET PANELS AND ADJUST FOR VISUAL APPEARANCE.
9. WATERPROOFING SEALANT (SILOXANE-BASED OR APPROVED EQUAL) SHALL BE APPLIED TO THE BACKFACE, TOP, BOTTOM, AND EDGES OF EXPOSED CONCRETE SURFACES OF TILE-FACED PRECAST CONCRETE PANELS.
10. PANELS SHALL BE INSPECTED BY THE ENGINEER UPON THE COMPLETION OF THE INSTALLATION. PANELS WITH CRACKING, SPALLING, OR OTHER DAMAGE SHALL BE REPLACED AS DIRECTED BY THE ENGINEER.

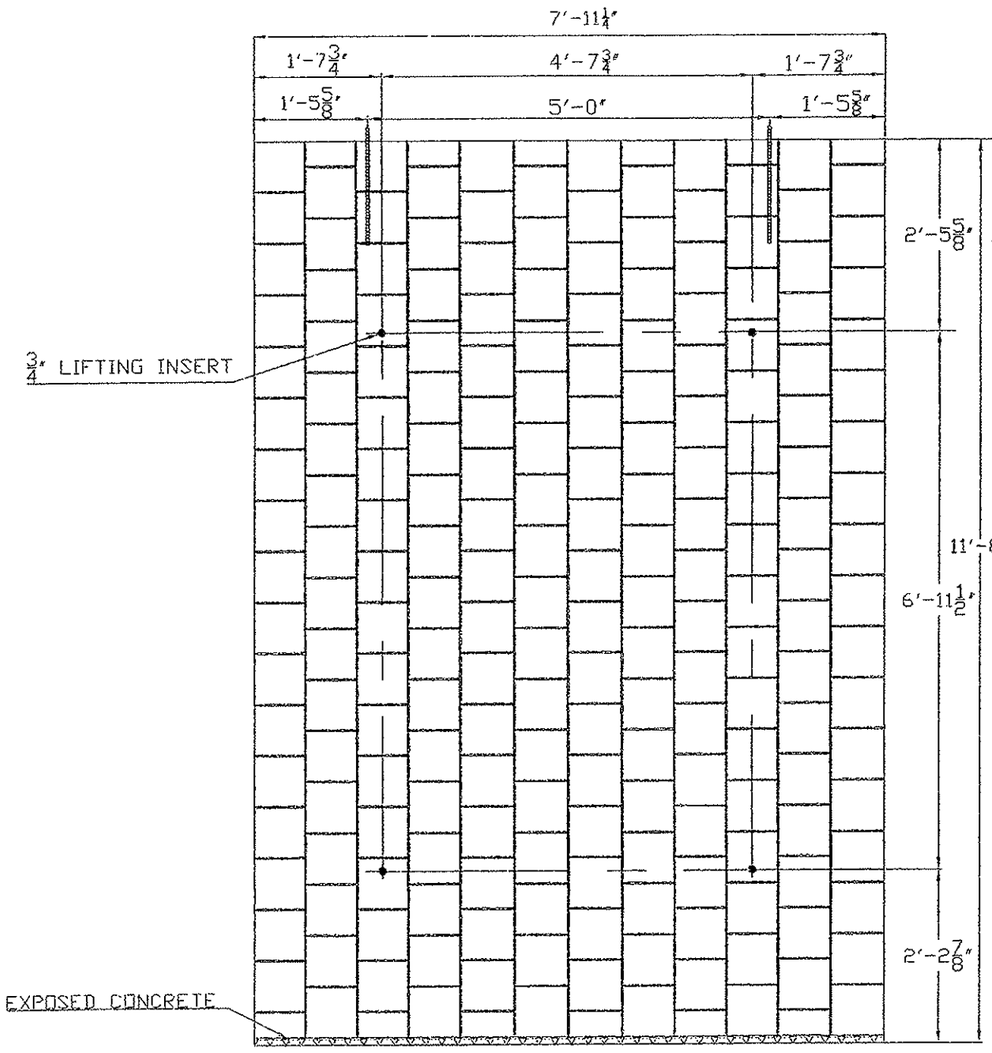

TYPICAL TILE-FACED PRECAST CONCRETE PANEL ELEVATION

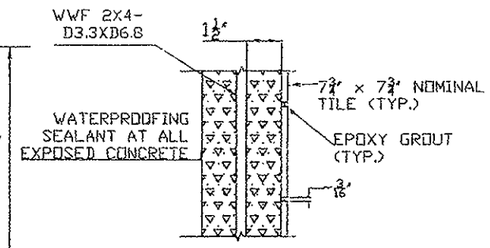

PANEL SECTION

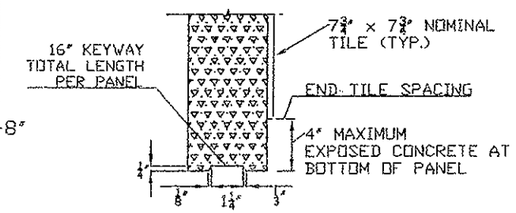

PANEL SECTION AT BOTTOM

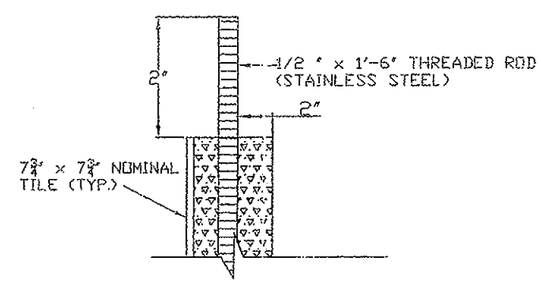

PROJECTED ROD AT TOP OF PANEL

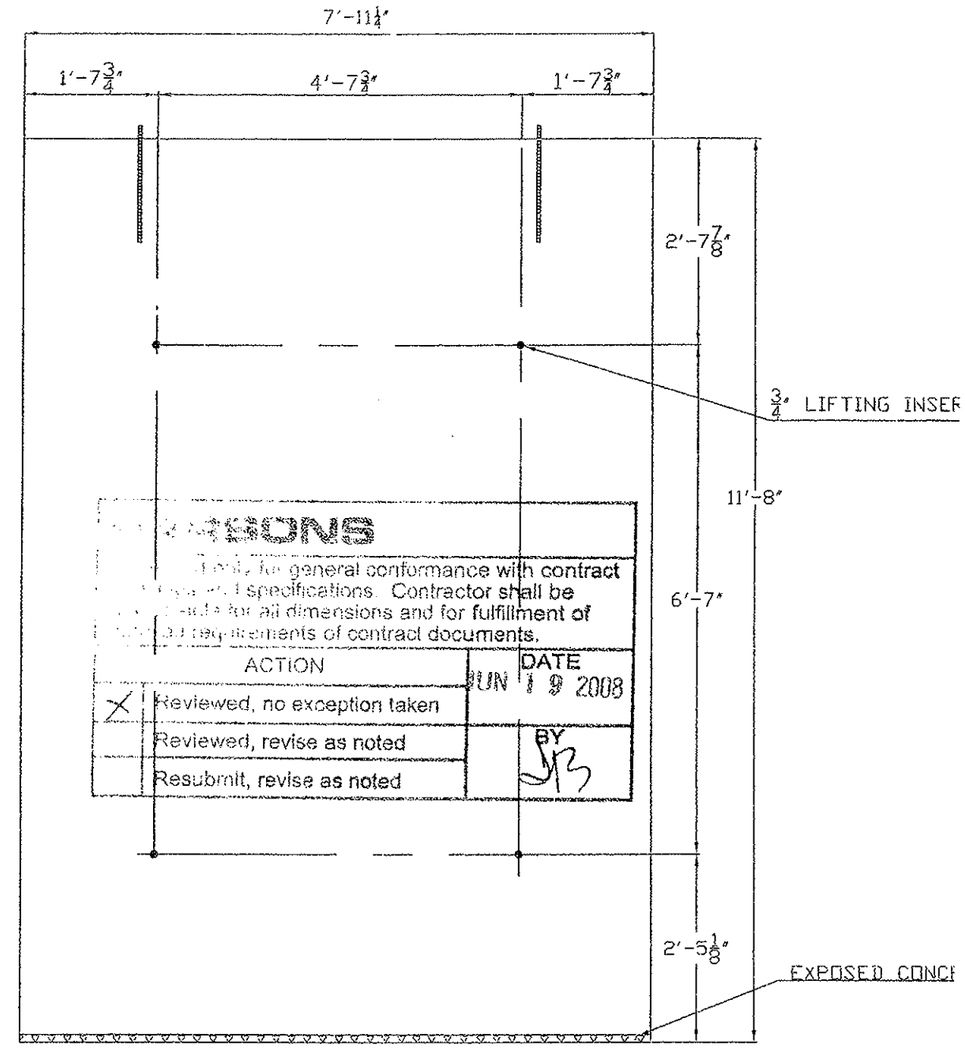

REVISIONS

[illegible] for general conformance with contract [illegible] specifications. Contractor shall be [illegible] for all dimensions and for fulfillment of [illegible] requirements of contract documents.

	ACTION	DATE
X	Reviewed, no exception taken	JUN 19 2008
	Reviewed, revise as noted	BY
	Resubmit, revise as noted	

TYPICAL BACK-FACED PRECAST CONCRETE PANEL ELEVATION

APPROVED
AS CORRECTED
JUN 0 2008
BY

FLATIRON

Scale Details	Sheet Revisions			EISENHOWER/JOHNSON MEMORIAL TUNNEL PANEL REPLACEMENT PROJECT TILE-FACED PRECAST CONCRETE PANEL DETAILS	Project No.
	Date:	Comments:	Init.		IM-0703-322
Horiz. Scale: As Noted				Engineer: Norman Kirk	Construction Code: 16102
Vert. Scale: As Noted				Drafter: Josh Chun	Sheet Number: 13A

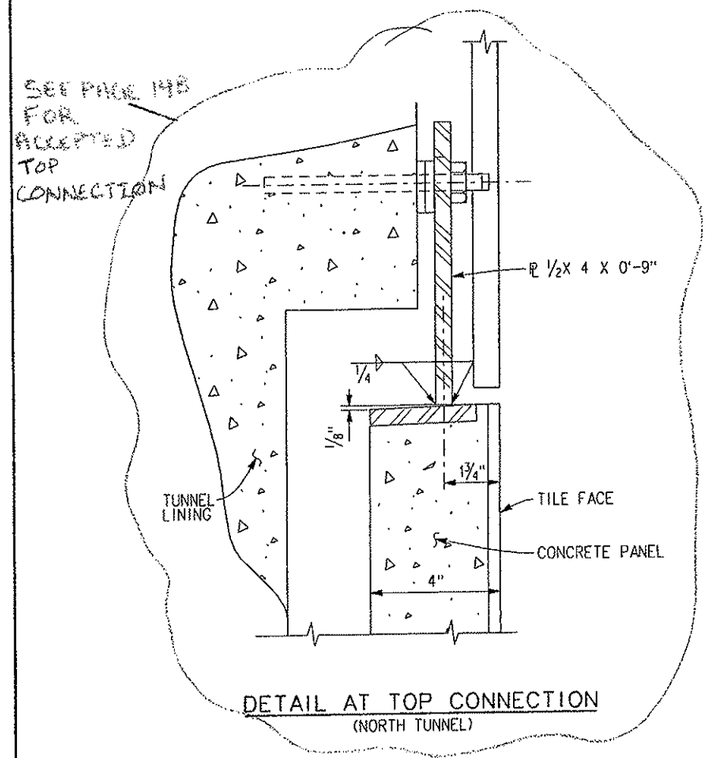

DETAIL AT TOP CONNECTION
(NORTH TUNNEL)

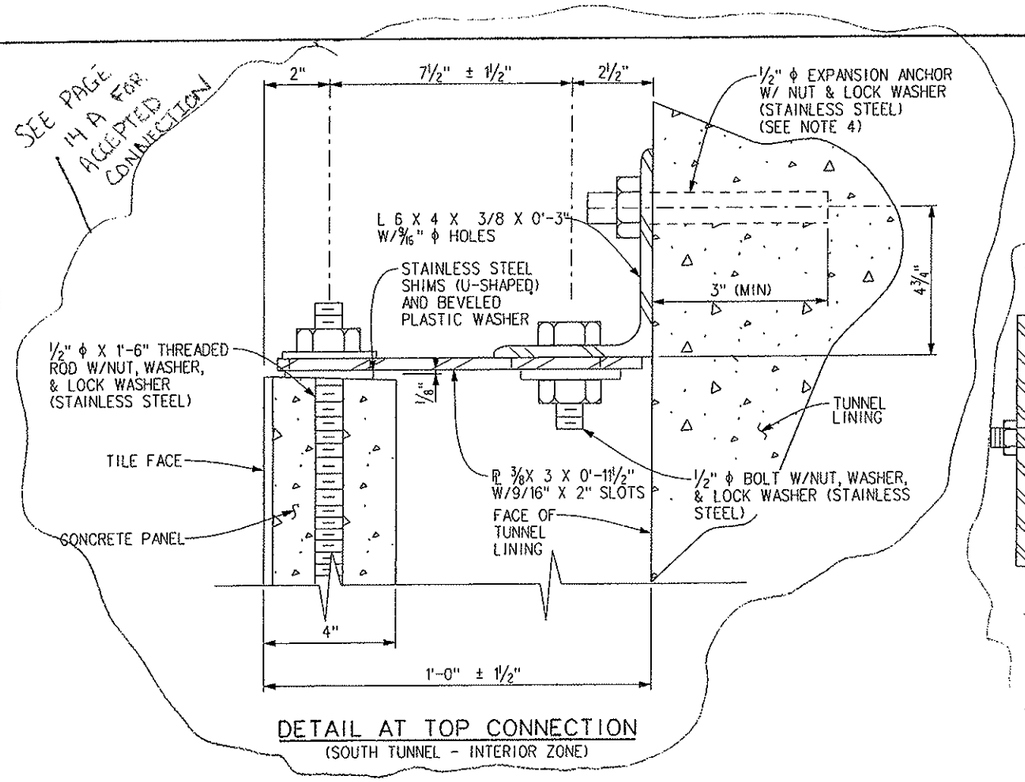

DETAIL AT TOP CONNECTION
(SOUTH TUNNEL - INTERIOR ZONE)

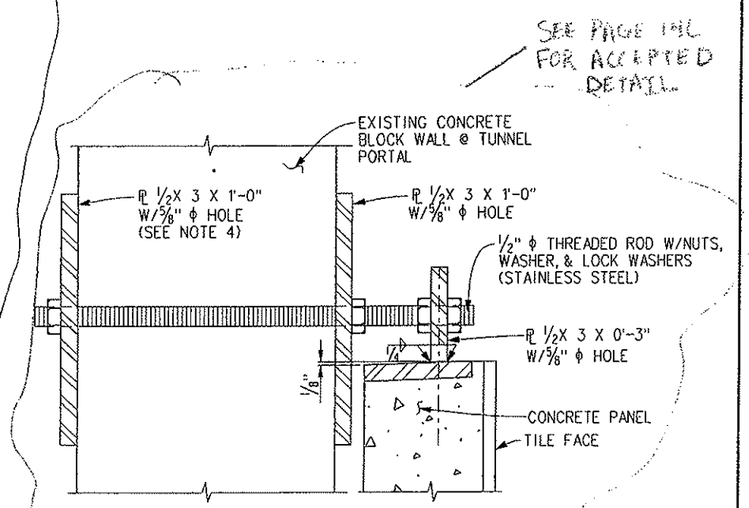

DETAIL AT CONCRETE BLOCK WALLS
(PORTAL AND TRANSITION AREAS)

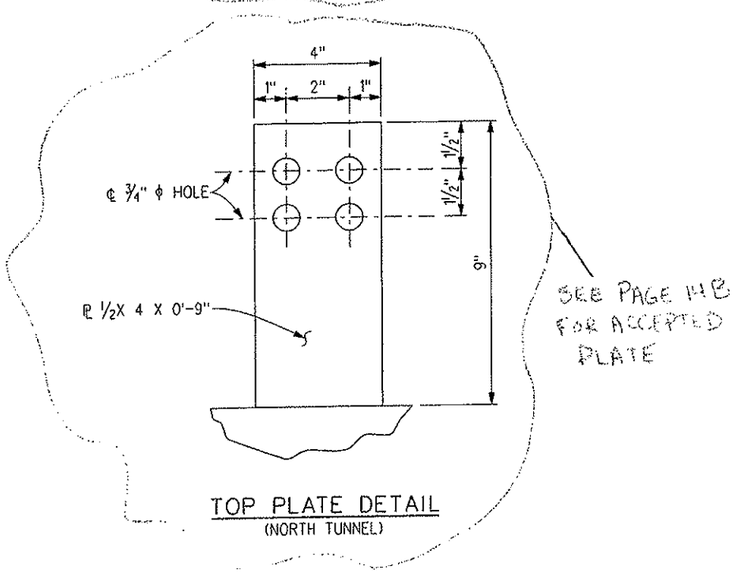

TOP PLATE DETAIL
(NORTH TUNNEL)

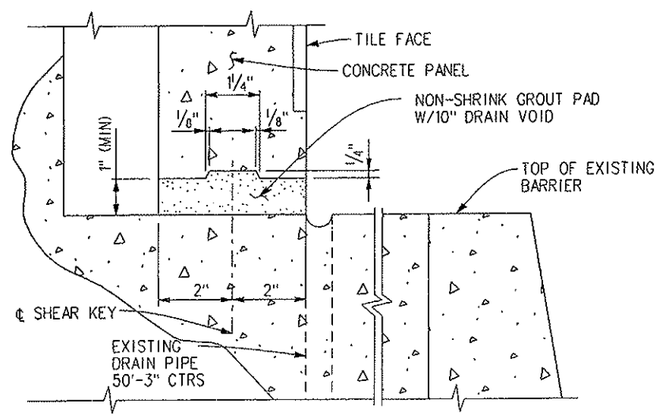

DETAIL AT PANEL BOTTOM
(SEE NOTE 5)

NOTES:
1. FOR CONCRETE PANEL NOTES, SEE SHEET S-11.
2. ALL STEEL, UNLESS NOTED OTHERWISE, SHALL BE GALVANIZED IN ACCORDANCE WITH AASHTO M 111. COST OF ½" PLATE AND ½" ϕ THREADED ROD AT BLOCK WALLS SHALL BE INCLUDED IN THE COST OF THE TILE-FACED PRECAST CONCRETE PANELS AND WILL NOT BE PAID FOR SEPARATELY.
3. CONCRETE PANEL STEEL INSERTS, EMBEDS, AND PLATES SHALL BE DESIGNED BY THE CONTRACTOR. DESIGN AND DETAILS SHALL BE SUBMITTED TO THE ENGINEER FOR REVIEW AND APPROVAL. REGARDLESS OF THEIR WIDTH, ALL CONCRETE PANELS SHALL HAVE AT LEAST TWO ANCHORS.
4. CONTRACTOR SHALL COORDINATE INSTALLATION OF PLATES ON THE INTERIOR SIDE OF THE BLOCK WALL WITH TUNNEL MAINTENANCE FORCES, TO ENSURE ACCESS AND TO MINIMIZE INTERFERENCE WITH TUNNEL FACILITIES. SCAFFOLDING OR OTHER TEMPORARY RAISED PLATFORM MAY BE NECESSARY TO COMPLETE THE INTERIOR ANCHORAGE. FIREPROOFING MATERIAL WITH A FIRE RESISTANCE RATING OF AT LEAST THREE HOURS SHALL BE APPLIED TO THE EXPOSED PANEL ANCHORAGES WITHIN THE VENTILATION BUILDING ROOMS.
5. FOR CASES IN WHICH BOND DOES NOT DEVELOP WITH THE EXPANSION ANCHOR FOR THE DEPTH SHOWN, A DEEPER ANCHOR AND/OR AN EPOXY RESIN SYSTEM SHALL BE USED SUBJECT TO REVIEW AND APPROVAL OF THE ENGINEER. SEE THE TILE-FACED PRECAST CONCRETE PANEL SPECIFICATIONS FOR DETAILS.
6. PROVIDE 16" TOTAL SHEAR KEY LENGTH PER 8' PANEL WIDTH, EVENLY DISTRIBUTED TO TWO SEGMENTS WITHIN THE GROUT PAD ON THE PANEL BOTTOM EDGE. USE BACKER ROD AT BACK AND TEMPORARY FORM AT FRONT TO HOLD GROUT PAD UNTIL CURED.

Print Date: 2/14/2008	Sheet Revisions	Colorado Department of Transportation	As Constructed	EISENHOWER/JOHNSON MEMORIAL TUNNEL PANEL REPLACEMENT PROJECT TILE-FACED PRECAST CONCRETE PANEL DETAILS (1)	Project No./Code
File Name: EJMT_TO_01_11.DGN	Date: / Comments / Init.	P.O. Box 399 Dumont, CO 80436 Phone: (303) 512-5750 Fax: (303) 512-5775	No Revisions:		IM-0703-322
Horiz. Scale: As Noted / Vert. Scale: As Noted			Revised: 4/30/09	Designer: J. BRAAKSMA / Structure Numbers: F-13-X	16102
Unit 0221 / Unit Leader STW		Region 1 Mountain Residency R.M.S.	Void:	Detailer: J. SPANIER	
PARSONS 1700 Broadway Suite 900 Denver, CO 80290 (303) 863-7900				Sheet Subset: / Subset Sheets: S-12 of S-19	Sheet Number 14

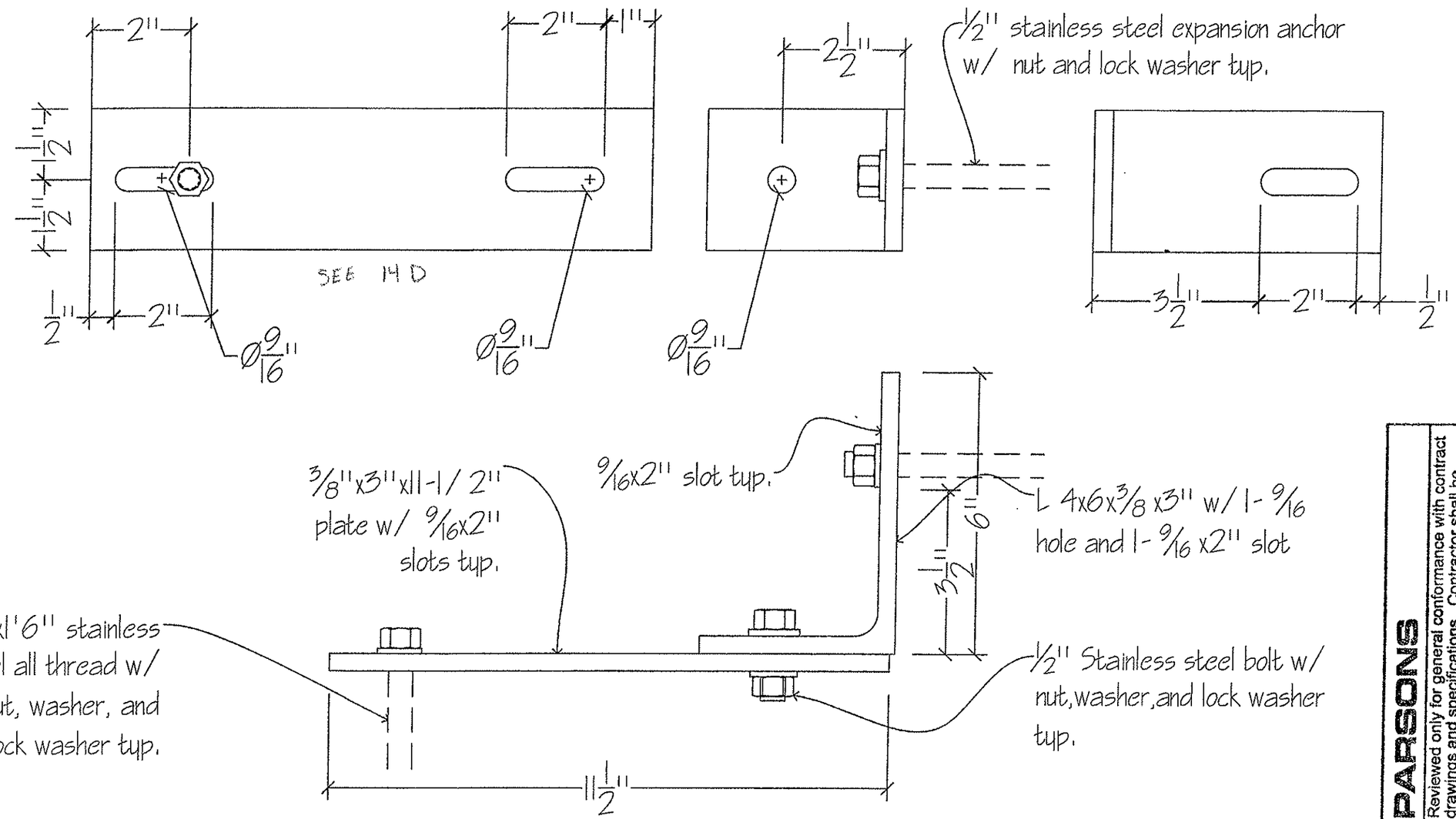

PARSONS

Reviewed only for general conformance with contract drawings and specifications. Contractor shall be responsible for all dimensions and for fulfillment of detailed requirements of contract documents.

ACTION	DATE	BY
Reviewed, no exception taken	JUN 19 2008	
Reviewed, revise as noted		

Qty of 4112 connections total.

APPROVED
for construction
JUN 04 2008
BY: [signature]
Flatiron

standard Top connection Detail

NOTE: ALL MILD STEEL TO BE GALVANIZED TYP.

Eisenhower / Johnson memorial Tunnel Panel replacement project.
Project # IM-0703-322
K&K Custom Welding and Fabrication (fabricator)
Flat Irons Constructors (Contractor)

DWG NO. | REF SHEET 4 A

Drawn by B. Woodward May 30, 2008

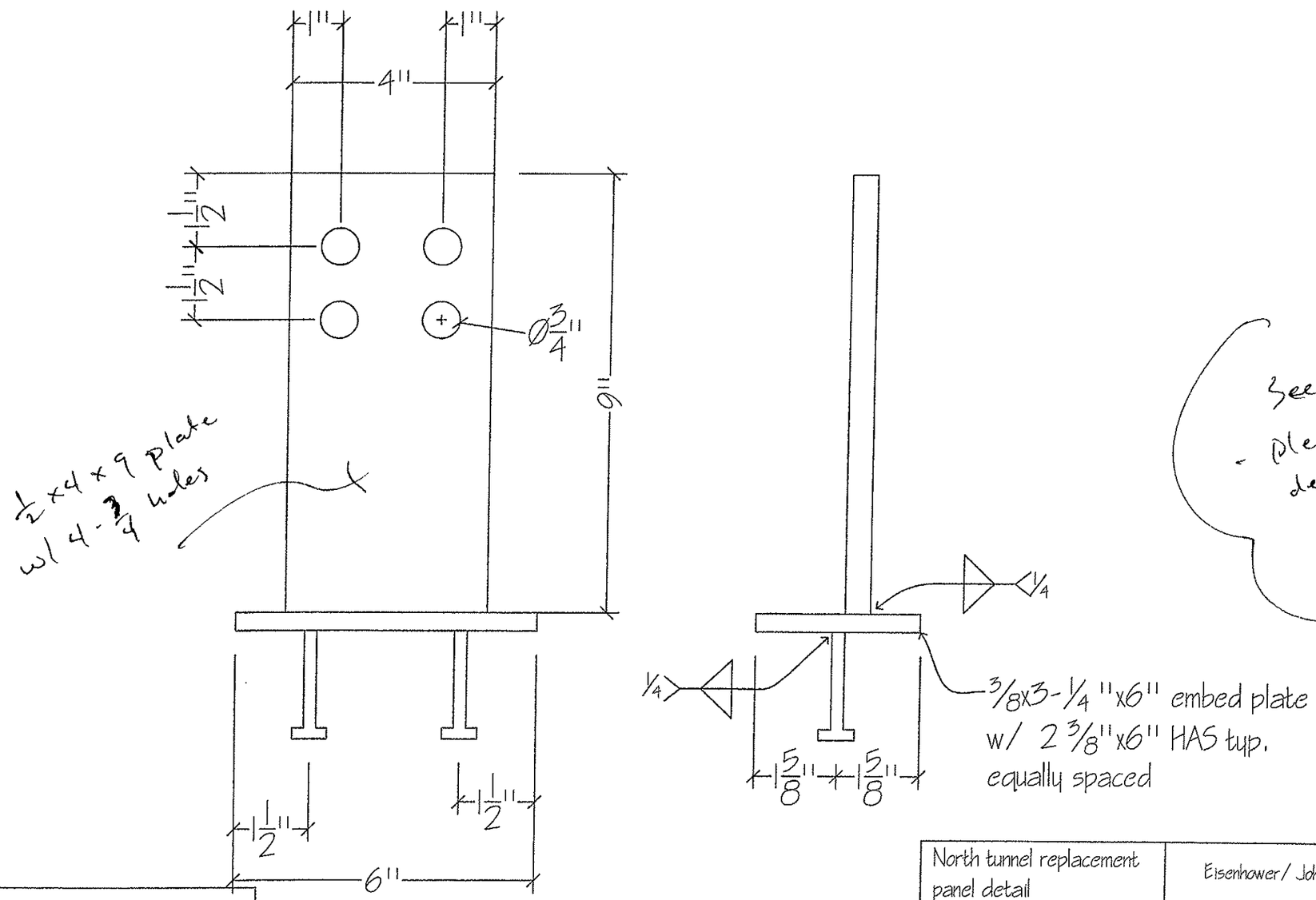

See plan sheet 14, note 3
- please provide embed plate design calcs for project records

Qty of 40 connections total.

North tunnel replacement panel detail	Eisenhower / Johnson memorial Tunnel Panel replacement project. Project # IM-0703-322 K&K Custom Welding and Fabrication (fabricator) Flat Irons Constructors (Contractor)
NOTE: ALL MILD STEEL TO BE GALVANIZED TYP.	DWG NO. 2 — REF SHEET 14B

Drawn by B. Woodward May 30, 2008

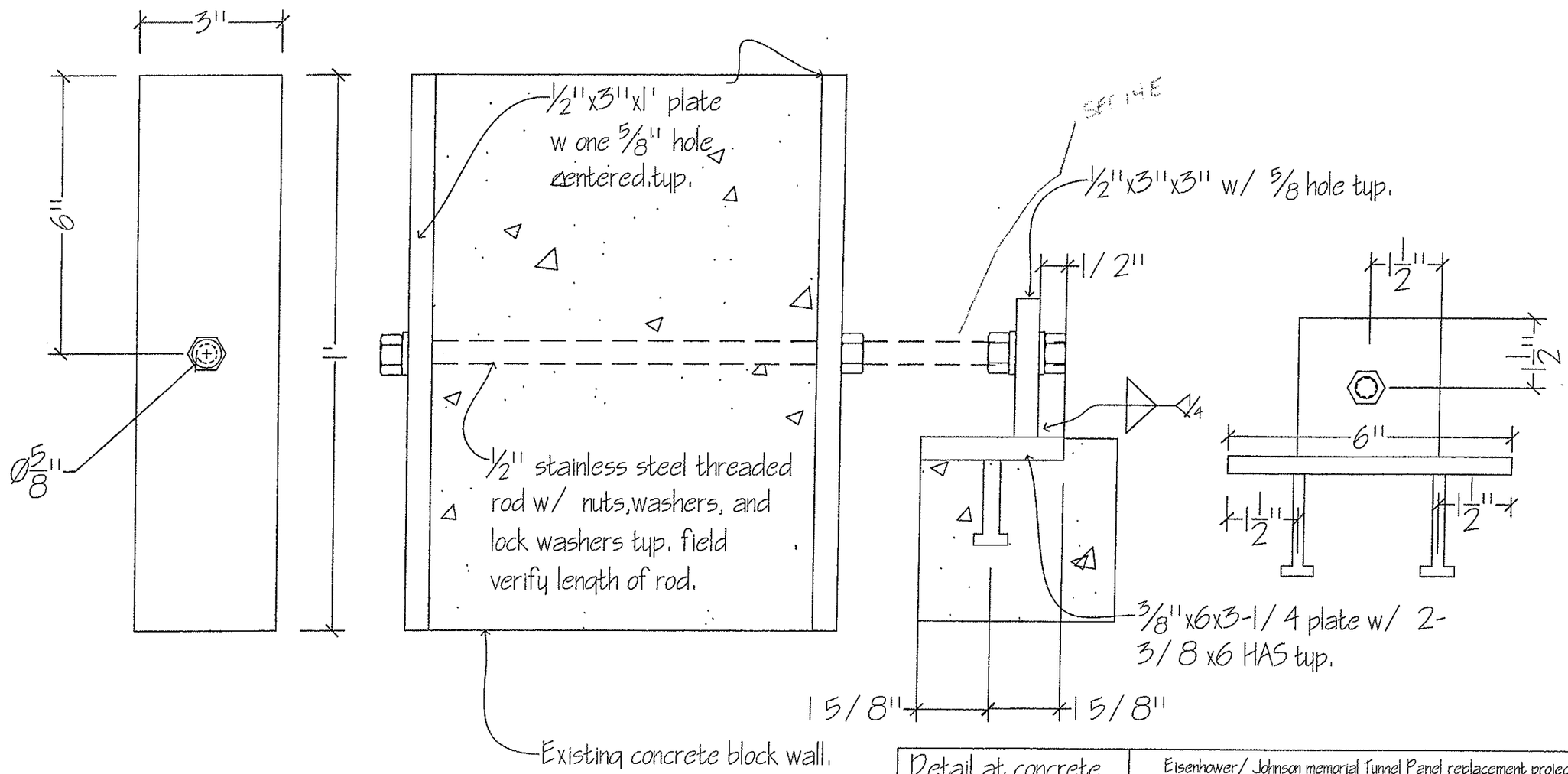

Qty of 232
connections total

Detail at concrete
block walls

NOTE: ALL MILD STEEL
TO BE GALVANIZED
TYP.

Eisenhower/ Johnson memorial Tunnel Panel replacement project.
Project # IM-0703-322
K&K Custom Welding and Fabrication (fabricator)
Flat Irons Constructors (Contractor)

DWG NO. 3

REF SHEET 14 C

drawn by B. Woodward May 30, 2008

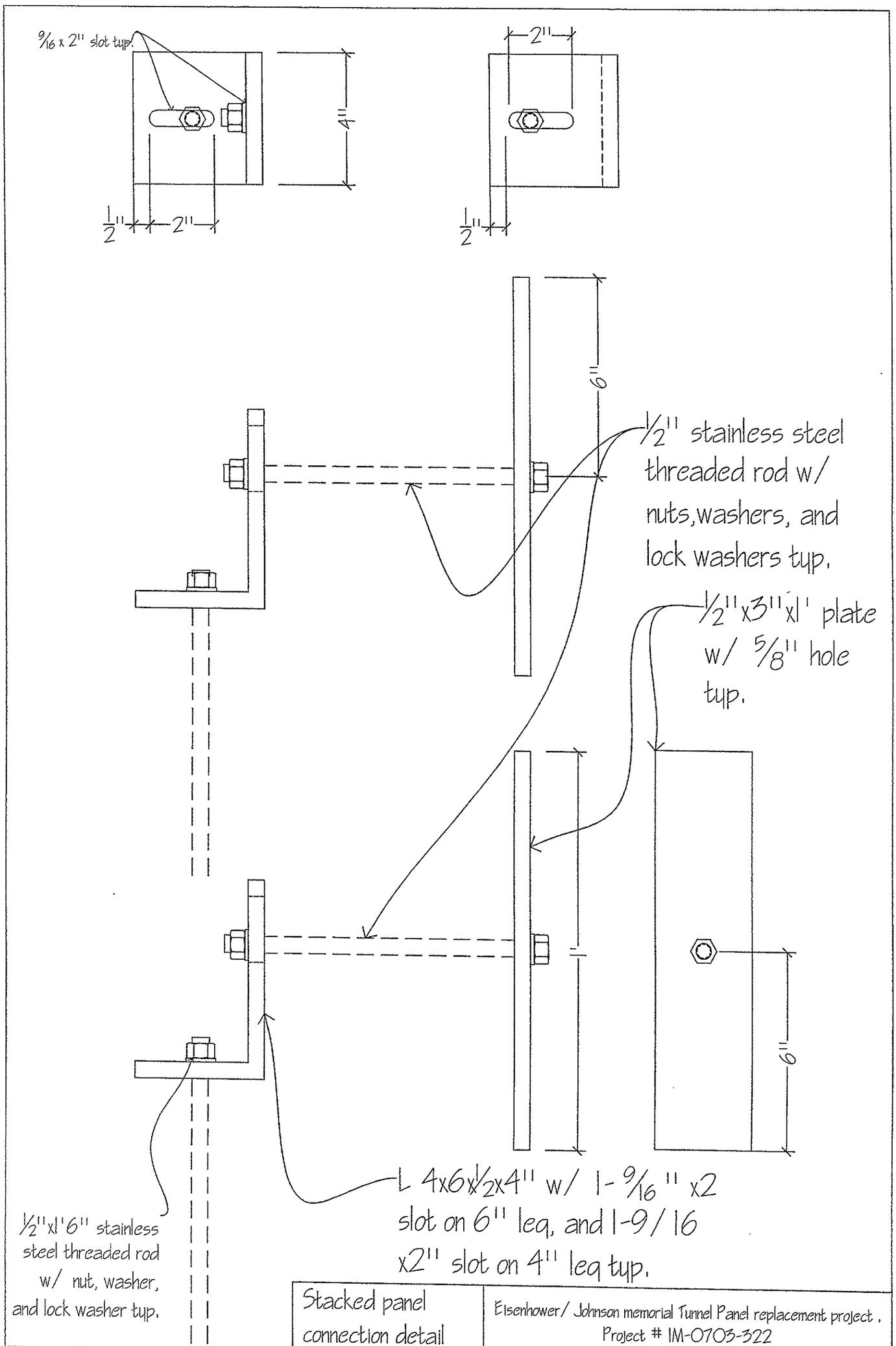

116 Connections total

Stacked panel connection detail

NOTE: ALL MILD STEEL TO BE GALVANIZED TYP.

Eisenhower/ Johnson memorial Tunnel Panel replacement project.
Project # IM-0703-322
K&K Custom Welding and Fabrication (fabricator)
Flat Irons Constructors (Contractor)

DWG NO. 4 | REF SHEET 14

Drawn by B. Woodward May 30, 2008

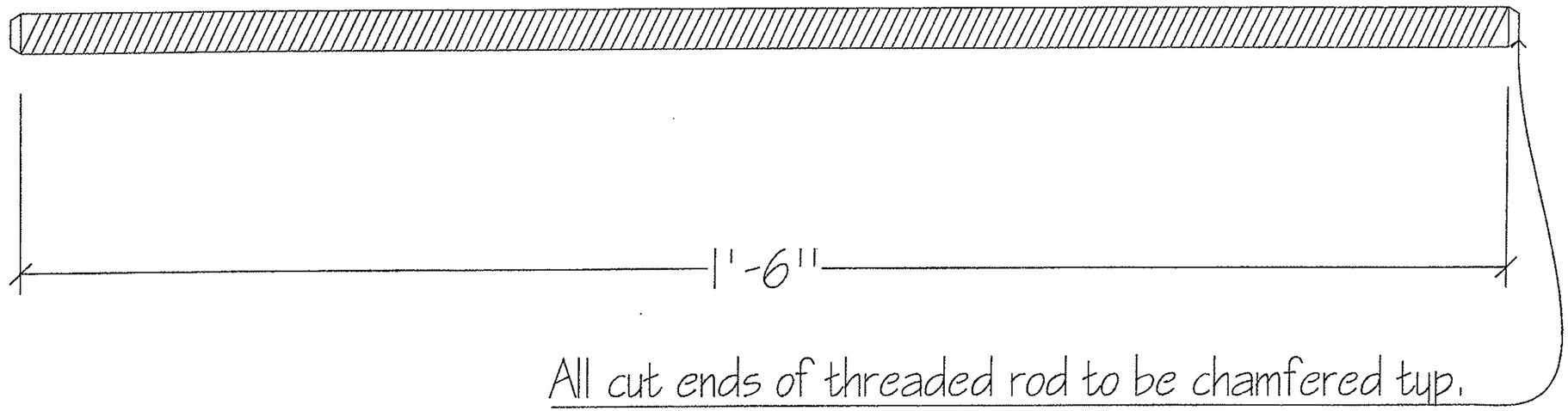

NOTE:
232 Additional 1/2" threaded rods to be cut, verify length with field measurment.

Qty of 4264 Total
All hardware to be Stainless

Eisenhower/ Johnson memorial Tunnel Panel replacement project.
Project # IM-0703-322
K&K Custom Welding and Fabrication (fabricator)
Flat Irons Constructors (Contractor)

DWG NO. 5 REF SHEET 14

Drawn by B. Woodward May 30, 2008

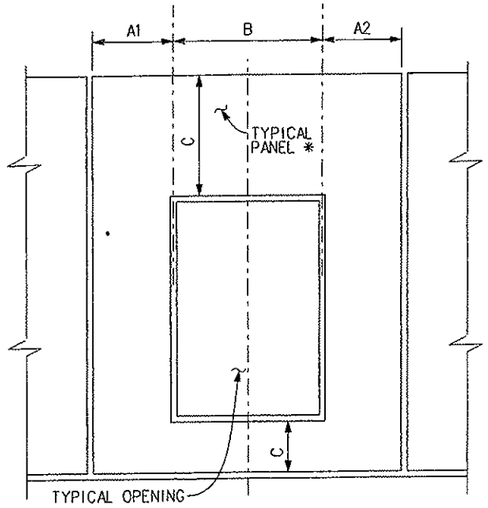

ELEVATION AT PANEL OPENINGS

TYPE 1

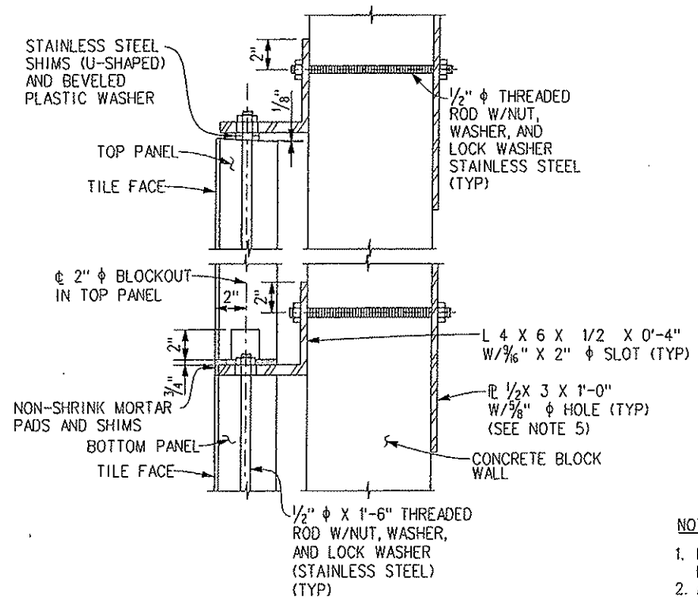

STACKED PANEL CONNECTION DETAILS

PORTAL AREAS ONLY

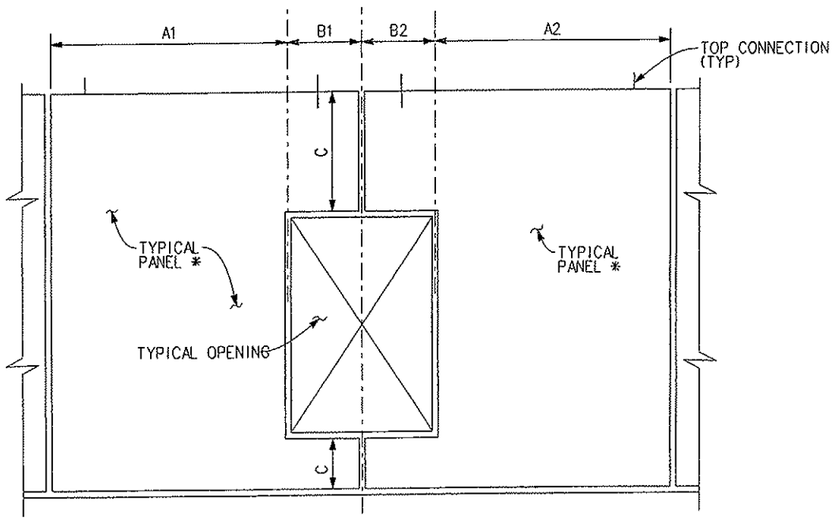

ELEVATION AT PANEL OPENINGS

TYPE 2

REQUIRED DIMENSIONS FOR PANELS WITH OPENINGS		
	TYPE 1	TYPE 2
A1, A2	GREATER THAN 27"	GREATER THAN 54"
B, B1, B2	LESS THAN 42"	
C	0" OR GREATER THAN 16"	

SEE NOTE 13

NOTES

1. FOR ADDITIONAL NOTES AND DETAILS OF TILE-FACED PRECAST CONCRETE PANELS, SEE SHEETS S-11 AND S-12..
2. ALL STEEL, UNLESS OTHERWISE NOTED, SHALL BE GALVANIZED IN ACCORDANCE WITH AASHTO M 111.
3. COST OF 1/2" PLATE AND 1/2" THREADED ROD AT BLOCK WALLS SHALL BE INCLUDED IN THE COST OF TILE-FACED PRECAST CONCRETE PANELS AND WILL NOT BE PAID FOR SEPARATELY.
4. CONCRETE PANEL STEEL INSERTS, EMBEDS, AND PLATES SHALL BE DESIGNED BY THE CONTRACTOR. DESIGN AND DETAILS SHALL BE SUBMITTED TO THE ENGINEER FOR REVIEW AND APPROVAL.
5. CONTRACTOR SHALL COORDINATE INSTALLATION OF PLATES ON THE INTERIOR SIDE OF THE BLOCK WALL WITH TUNNEL MAINTENANCE FORCES, TO ENSURE ACCESS AND TO MINIMIZE INTERFERENCE WITH TUNNEL FACILITIES. SCAFFOLDING OR OTHER TEMPORARY RAISED PLATFORM MAY BE NECESSARY TO COMPLETE THE INTERIOR ANCHORAGE. FIREPROOFING MATERIAL WITH A FIRE RESISTANCE RATING OF AT LEAST THREE HOURS SHALL BE APPLIED TO THE EXPOSED PANEL ANCHORAGES WITHIN THE VENTILATION BUILDING ROOMS.
6. THE CONTRACTOR IS RESPONSIBLE FOR ALL CONCRETE PANEL LAYOUTS AND DIMENSIONS AT THE UTILITY OPENINGS.
7. CONCRETE PANELS MAY BE SAW CUT IN THE FIELD. ALL SAW CUTS SHALL BE FULL DEPTH.
8. OPENINGS LESS THAN 3'-0" X 3'-0" MAY BE SAW CUT OUT OF THE CONCRETE PANELS AS NECESSARY.
9. * ADJUST WIDTHS OF ADJACENT CONCRETE PANELS AS REQUIRED.
10. THE CONTRACTOR IS RESPONSIBLE FOR DETERMINATION OF TYPE AND LOCATION OF UTILITIES PRIOR TO INSTALLATION OF CONCRETE PANEL ANCHORS.
11. THE REMOVAL AND RESETTING OF ALL SIGNS FROM EXISTING PANELS TO CONCRETE PANELS, IS INCIDENTAL AND SHALL BE INCLUDED IN THE WORK.
12. THE REMOVAL AND RESETTING OF UTILITIES (AS REQUIRED) TO REMOVE AND REPLACE CONCRETE PANELS IS INCIDENTAL AND SHALL BE INCLUDED IN THE WORK.
13. PANELS THAT DO NOT MEET THESE DIMENSIONAL REQUIREMENTS WITHIN THE EXISTING PANEL LAYOUT ARE NOTED AS 'SPECIAL' PANELS. FOR A LISTING OF SPECIAL PANELS, SEE SHEETS S-16 THROUGH S-19.

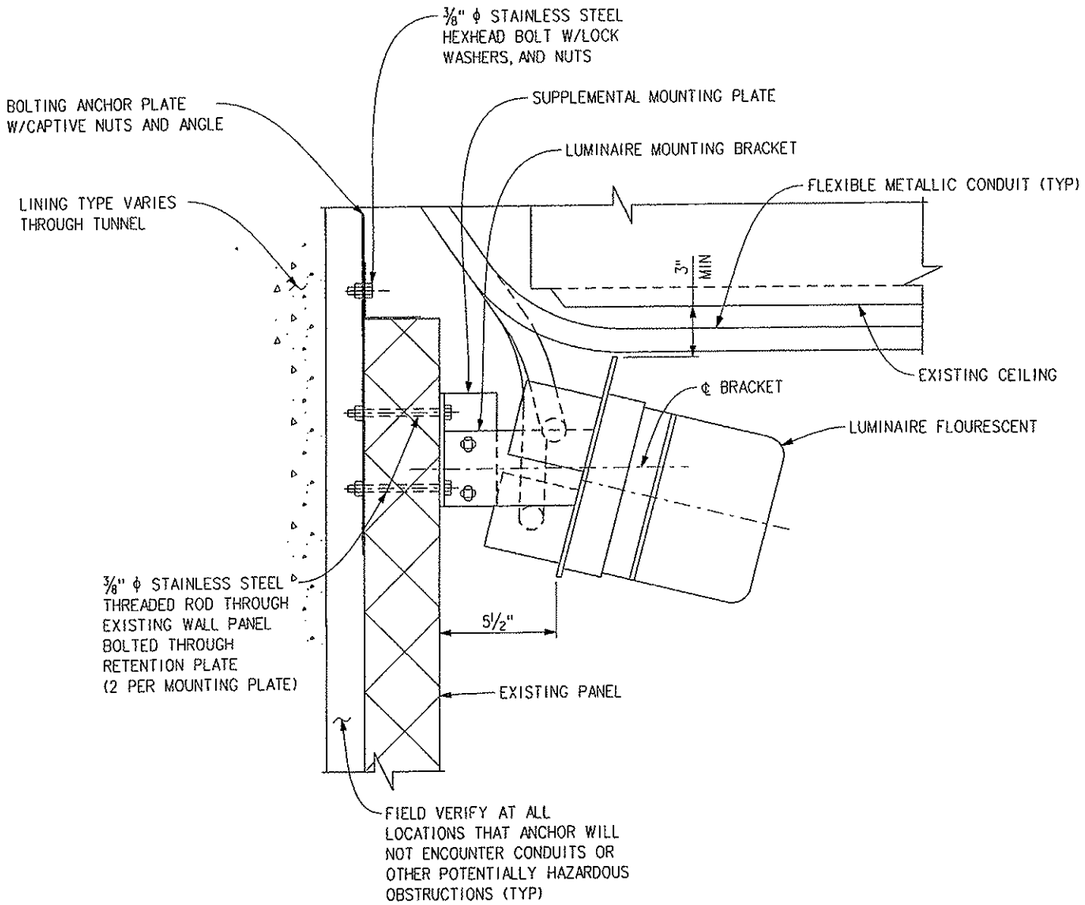

EXISTING MOUNTING CONDITION-TUNNEL PORTAL TRANSITION

SOUTH TUNNEL - NORTH WALL & SOUTH WALL
STA. 36+04 TO STA 38+81
STA. 122+73 TO STA.125+51

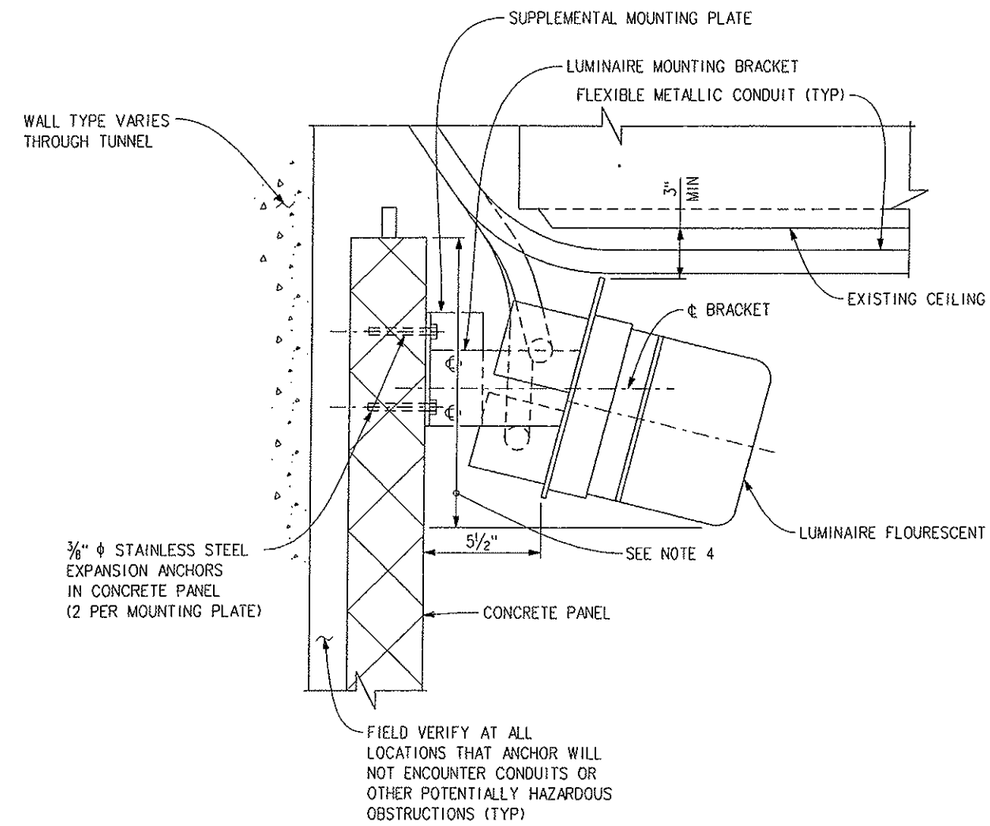

NEW MOUNTING CONDITION-TUNNEL PORTAL TRANSITION

SOUTH TUNNEL - NORTH WALL & SOUTH WALL
STA. 36+04 TO STA 38+81
STA. 122+73 TO STA.125+51

NOTES:

1. THE DETAILS SHOWN FOR EXISTING CONDITIONS ARE TAKEN FROM RECENT PLANS FOR LIGHTING UPGRADES IN THE SOUTH TUNNEL.
2. TUNNEL LIGHTING UNITS THAT ARE MOUNTED ON EXISTING PANELS AT THE PORTAL AND TRANSITION AREAS SHALL BE REINSTALLED ONTO CONCRETE PANELS AT THEIR EXISTING LOCATIONS. THE CONTRACTOR SHALL VERIFY THE EXACT LOCATIONS, LAYOUTS, AND ANCHOR POINTS FOR LIGHTING UNITS IN THESE AREAS.
3. AT LEAST ONE WALL OF SOUTH TUNNEL LIGHTING UNITS SHALL BE OPERATIONAL IN ALL TUNNEL AREAS AT ALL TIMES.
4. AT CONTRACTOR'S OPTION, TILE FACING MAY BE ELIMINATED BEHIND LUMINAIRES.

Print Date: 2/14/2008	Sheet Revisions	Colorado Department of Transportation	As Constructed	EISENHOWER/JOHNSON MEMORIAL TUNNEL PANEL REPLACEMENT PROJECT DETAILS FOR RESET LUMINAIRE	Project No./Code
File Name: EJMT_TO_01_13.DGN	Date: / Comments / Init.	P.O. Box 399 Dumont, CO 80436 Phone: (303) 512-5750 Fax: (303) 512-5775	No Revisions: 9/30/09		IM-0703-322
Horiz. Scale: As Noted / Vert. Scale: As Noted			Revised:	Designer: J. BRAAKSMA / Structure Numbers: F-13-X	16102
Unit 0221 / Unit Leader STW		Region 1 Mountain Residency R.M.S.	Void:	Detailer: J. SPANIER	
PARSONS 1700 Broadway Suite 900 Denver, CO 80290 (303) 863-7900				Sheet Subset: / Subset Sheets: S-14 of S-19	Sheet Number 16

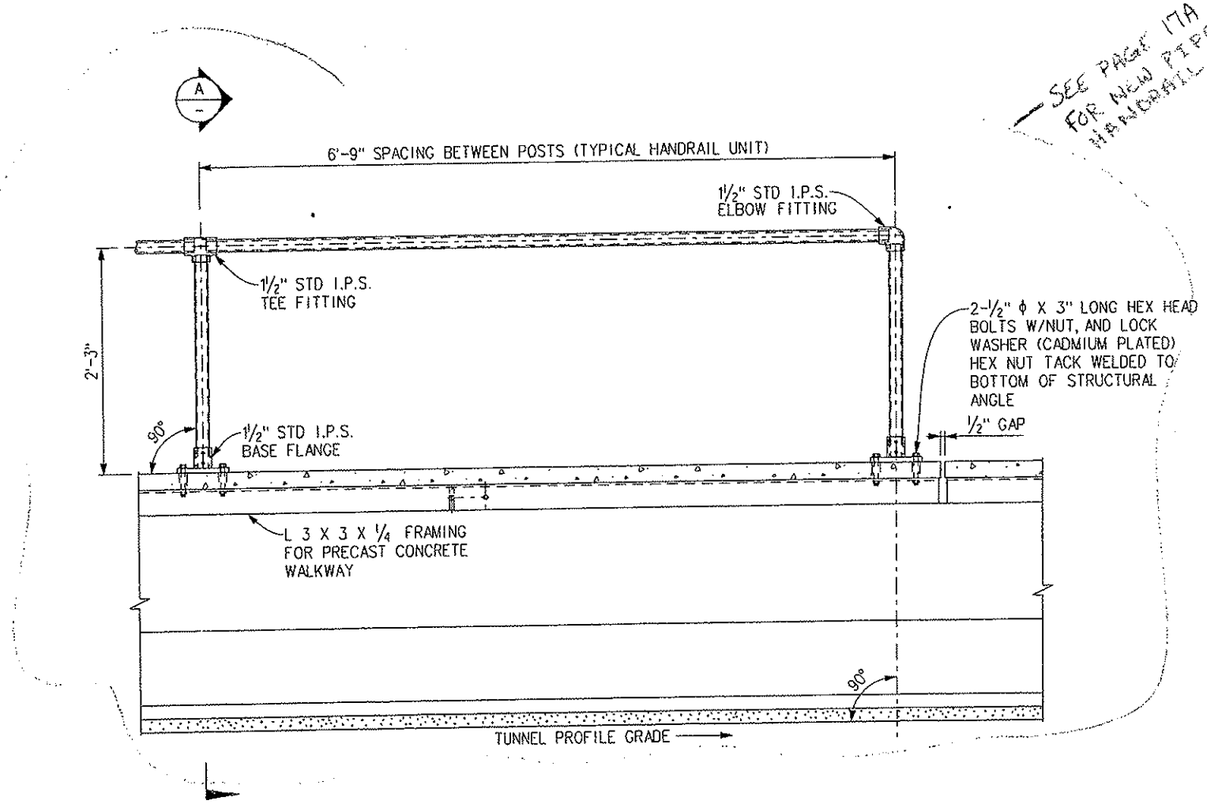

SEE PAGE 17A FOR NEW PIPE HANDRAIL DETAIL

ELEVATION

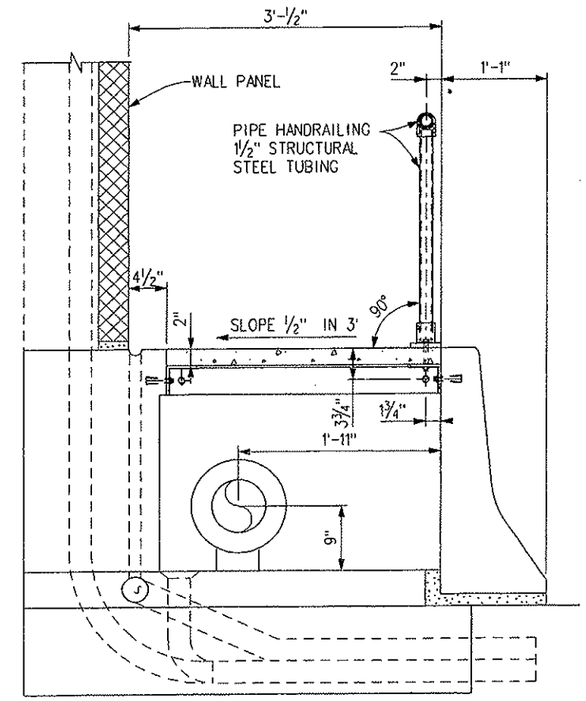

SECTION A

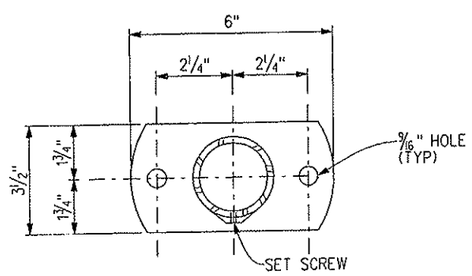

BASE FLANGE

NOTES:

1. THE DETAILS SHOWN ARE TAKEN FROM AS-BUILT PLANS FOR THE SOUTH TUNNEL. TYPICAL PRECAST CONCRETE WALKWAY ELEMENT ON STEEL FRAMING IS APPROXIMATELY 2'-7½" WIDE BY 4'-2" LONG.
2. PIPE HANDRAILING AND BASE FLANGE ATTACHMENT AT THE PORTAL ENDS OF THE TUNNEL DIFFERS FROM THE DETAILS SHOWN. SEE AS-BUILT PLANS AND FIELD VERIFY ALL ATTACHMENT DETAILS BEFORE REMOVING THE PIPE HANDRAILING.
3. THE EXISTING PIPE HANDRAILING OR AN APPROVED ALTERNATE SHALL BE IN PLACE AND FUNCTIONAL AT THE END OF EVERY WORKING SHIFT. THE COST OF AN APPROVED ALTERNATE SHALL BE INCLUDED IN THE WORK.
4. PIPE HANDRAILING REMOVAL AND RESETTING SHALL BE COORDINATED WITH REMOVAL OF EXISTING PANELS, INSTALLATION OF TILE-FACED PRECAST CONCRETE PANELS, REPLACEMENT OF GUARDRAIL, AND ALL OTHER PROJECT WORK.

Print Date: 2/14/2008	Sheet Revisions	Colorado Department of Transportation	As Constructed	EISENHOWER/JOHNSON MEMORIAL TUNNEL PANEL REPLACEMENT PROJECT	Project No./Code
File Name: EJMT_TO_01_14.dgn	Date: / Comments / Init.	P.O. Box 399, Dumont, CO 80436, Phone: (303) 512-5750, Fax: (303) 512-5775	No Revisions:	DETAILS FOR RESET PIPE HANDRAILING	IM-0703-322
Horiz. Scale: As Noted / Vert. Scale: As Noted		Region 1 Mountain Residency R.M.S.	Revised: 12/15/09	Designer: J. BRAAKSMA / Structure Numbers: F-13-X	16102
Unit 0221 / Unit Leader STW			Void:	Detailer: J. SPANIER	
PARSONS, 1700 Broadway Suite 900, Denver, CO 80290, (303) 863-7900				Sheet Subset: / Subset Sheets: S-15 of S-19	Sheet Number 17

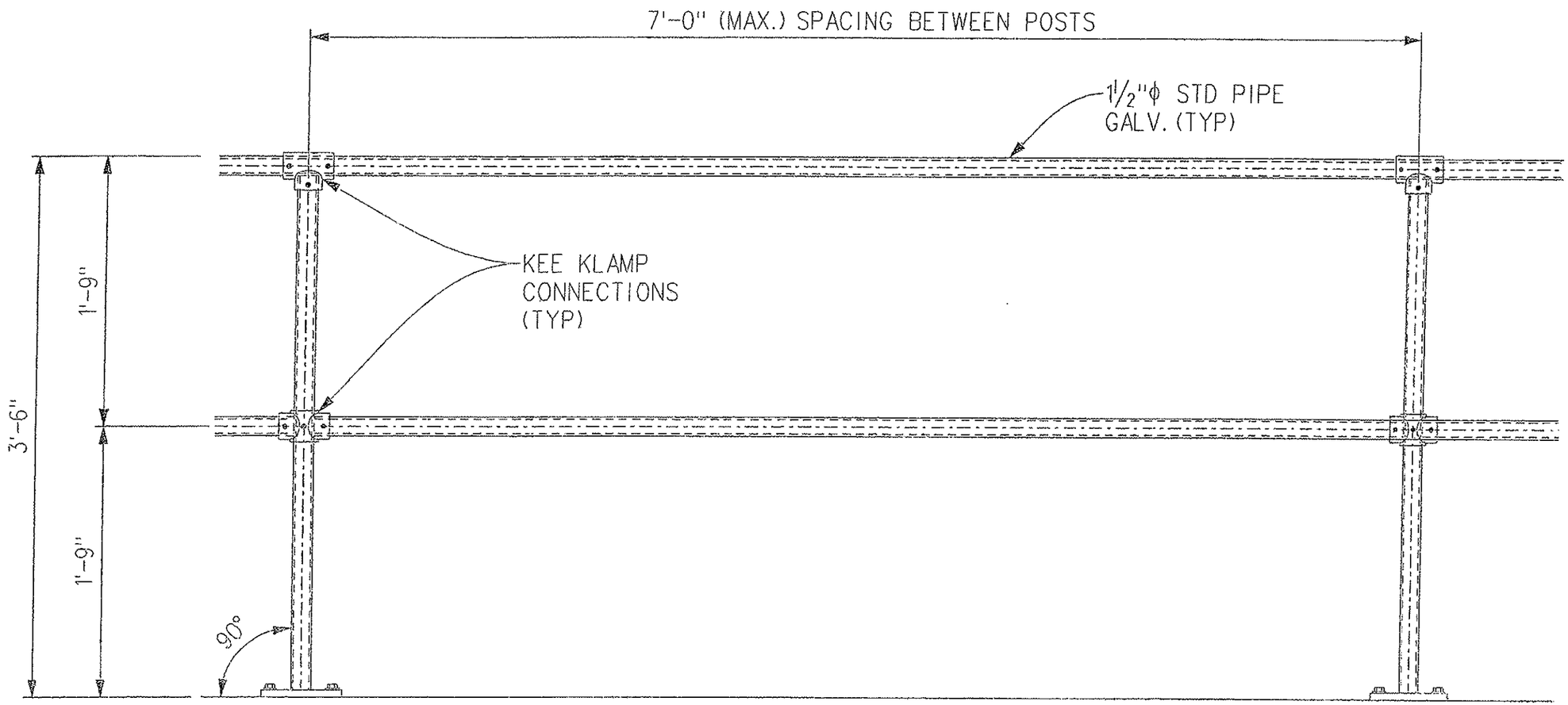

NEW HANDRAIL DETAIL

4/18/2008 1:50:54 PM G:\646878_CDOT_NPS_TUNNEL\CADD\DGN\EJMT_TO_01_14.dgn

PANEL NUMBER	UTILITY/APPURTENANCE	RE-INSTALL	ABANDON	SPECIAL PANEL REQUIRED	COMMENTS
20, 21	VENT	X			
55	ANCHOR		X		
59	AC PULLBOX / TELEPHONE PULLBOX	X		X	
61, 62	AC PULLBOX / TELEPHONE PULLBOX / MESSAGE BOARD DISCONNECT	X			
78	DRAIN CLEANOUT COVER PLATE	X			
86	ANCHOR		X		
97	DRAIN CLEANOUT COVER PLATE	X			
110	AC PULLBOX / TELEPHONE PULLBOX / MESSAGE BOARD DISCONNECT	X		X	
153	DRAIN CLEANOUT COVER PLATE	X		X	SEE NOTE 6
158	ANCHOR		X		
158, 159	AC PULLBOX / TELEPHONE PULLBOX / MESSAGE BOARD DISCONNECT	X			
159	ANCHOR		X		
172	DRAIN CLEANOUT COVER PLATE	X		X	SEE NOTE 6
207, 208	AC PULLBOX / TELEPHONE PULLBOX / MESSAGE BOARD DISCONNECT	X		X	
210	DRAIN CLEANOUT COVER PLATE	X		X	SEE NOTE 6
214	ANCHOR		X		
248	DRAIN CLEANOUT COVER PLATE	X		X	SEE NOTE 6
259 TOP	ANCHOR		X		
259 BTM	AC PULLBOX / TELEPHONE PULLBOX / MESSAGE BOARD DISCONNECT	X		X	
260	ANCHOR		X		
267	DRAIN CLEANOUT COVER PLATE	X		X	SEE NOTE 6
295	AC PULLBOX / TELEPHONE PULLBOX / MESSAGE BOARD DISCONNECT	X		X	
304	DRAIN CLEANOUT COVER PLATE	X			
324, 325	AC PULLBOX / TELEPHONE PULLBOX / MESSAGE BOARD DISCONNECT	X			
342	DRAIN CLEANOUT COVER PLATE	X			
359	ANCHOR		X		
359, 360	AC PULLBOX / TELEPHONE PULLBOX / MESSAGE BOARD DISCONNECT	X		X	
360	ANCHOR		X		
361	DRAIN CLEANOUT COVER PLATE	X		X	SEE NOTE 6
379	DRAIN CLEANOUT COVER PLATE	X		X	SEE NOTE 6
398	DRAIN CLEANOUT COVER PLATE	X		X	SEE NOTE 6
409, 410 TOP	ANCHOR PLATE		X		
409, 410 BTM	AC PULLBOX / TELEPHONE PULLBOX / MESSAGE BOARD DISCONNECT	X			
417	DRAIN CLEANOUT COVER PLATE	X		X	SEE NOTE 6
436	DRAIN CLEANOUT COVER PLATE	X		X	SEE NOTE 6
455	DRAIN CLEANOUT COVER PLATE	X		X	SEE NOTE 6
459	ANCHOR		X		
459, 460	AC PULLBOX / TELEPHONE PULLBOX / MESSAGE BOARD DISCONNECT	X		X	
460	ANCHOR		X		
480	ANCHOR		X		
486	ANCHOR		X		
492	DRAIN CLEANOUT COVER PLATE	X		X	SEE NOTE 6
506, 507	AC PULLBOX / TELEPHONE PULLBOX / MESSAGE BOARD DISCONNECT	X			
509	ANCHOR		X		
511	DRAIN CLEANOUT COVER PLATE	X		X	SEE NOTE 6
530	DRAIN CLEANOUT COVER PLATE	X			
545, 546	AC PULLBOX / TELEPHONE PULLBOX / MESSAGE BOARD DISCONNECT	X		X	
549	DRAIN CLEANOUT COVER PLATE	X			
560 TOP	ANCHOR		X		
560 BTM	AC PULLBOX / TELEPHONE PULLBOX / MESSAGE BOARD DISCONNECT	X		X	
561	ANCHOR		X		
568	DRAIN CLEANOUT COVER PLATE	X			
581	CABINET AND LEAD WIRES FOR GAUGES		X		
586	DRAIN CLEANOUT COVER PLATE	X		X	SEE NOTE 6
589	ANCHOR		X		
610	ANCHOR		X		
611	AC PULLBOX / TELEPHONE PULLBOX / MESSAGE BOARD DISCONNECT	X		X	
623	DRAIN CLEANOUT COVER PLATE	X			
638	ANCHOR		X		
643	DRAIN CLEANOUT COVER PLATE	X		X	SEE NOTE 6
660	ANCHOR		X		
660, 661	AC PULLBOX / TELEPHONE PULLBOX / MESSAGE BOARD DISCONNECT	X			
661	ANCHOR		X		

PANEL NUMBER	UTILITY/APPURTENANCE	RE-INSTALL	ABANDON	SPECIAL PANEL REQUIRED	COMMENTS
662	DRAIN CLEANOUT COVER PLATE	X		X	SEE NOTE 6
680, 681	DRAIN CLEANOUT COVER PLATE	X			
700	DRAIN CLEANOUT COVER PLATE	X		X	SEE NOTE 6
711, 712	AC PULLBOX / TELEPHONE PULLBOX / MESSAGE BOARD DISCONNECT	X			
718	DRAIN CLEANOUT COVER PLATE	X			
737	DRAIN CLEANOUT COVER PLATE	X			
756	DRAIN CLEANOUT COVER PLATE	X		X	SEE NOTE 6
760	ANCHOR		X		
761 TOP	ANCHOR		X		
761 BTM	AC PULLBOX / TELEPHONE PULLBOX / MESSAGE BOARD DISCONNECT	X		X	
774	DRAIN CLEANOUT COVER PLATE	X		X	SEE NOTE 6
781	ANCHOR		X		
794	DRAIN CLEANOUT COVER PLATE	X		X	SEE NOTE 6
795	AC PULLBOX / TELEPHONE PULLBOX / MESSAGE BOARD DISCONNECT	X		X	
812	DRAIN CLEANOUT COVER PLATE	X			
821, 822	AC PULLBOX / TELEPHONE PULLBOX / MESSAGE BOARD DISCONNECT	X		X	
831	DRAIN CLEANOUT COVER PLATE	X		X	SEE NOTE 6
850	DRAIN CLEANOUT COVER PLATE	X		X	SEE NOTE 6
861	ANCHOR		X		
861, 862	AC PULLBOX / TELEPHONE PULLBOX / MESSAGE BOARD DISCONNECT	X		X	
862	ANCHOR		X		
869	DRAIN CLEANOUT COVER PLATE	X			
888	DRAIN CLEANOUT COVER PLATE	X		X	SEE NOTE 6
907	DRAIN CLEANOUT COVER PLATE	X		X	SEE NOTE 6
911, 912	AC PULLBOX / TELEPHONE PULLBOX / MESSAGE BOARD DISCONNECT	X			
926	DRAIN CLEANOUT COVER PLATE	X		X	SEE NOTE 6
944	DRAIN CLEANOUT COVER PLATE	X		X	SEE NOTE 6
961	ANCHOR		X		
961, 962	AC PULLBOX / TELEPHONE PULLBOX / MESSAGE BOARD DISCONNECT	X		X	
962	ANCHOR		X		
963	DRAIN CLEANOUT COVER PLATE	X			
973	ANCHOR		X		
982	DRAIN CLEANOUT COVER PLATE	X			
1001	DRAIN CLEANOUT COVER PLATE	X		X	SEE NOTE 6
1012, 1013	AC PULLBOX / TELEPHONE PULLBOX / MESSAGE BOARD DISCONNECT	X		X	
1038	DRAIN CLEANOUT COVER PLATE	X			
1052, 1053	DRAIN CLEANOUT COVER PLATE	X			
1060, 1061	CAMERA AND TWO EXTERNAL BOXES - ELECTRIC, TELEPHONE, COAX	X			
1065 TOP	TWO ANCHORS		X		
1065 BTM	AC PULLBOX / TELEPHONE PULLBOX / MESSAGE BOARD DISCONNECT	X		X	
1069	ANCHOR		X		
1119	SIGNAL HORN / ELECTRIC		X		

NOTES:

1. THE PANEL NUMBER SHOWN INCLUDES BOTH THE UPPER AND LOWER PANEL SECTIONS AT THE PORTALS.
2. FOR DETAILS AT SPECIAL PANELS AND AT STACKED PANELS AT PORTAL AREAS, SEE SHEET S-13.
3. THE CONTRACTOR SHALL VERIFY ALL LOCATIONS AND DIMENSIONS FOR CONCRETE PANELS PRIOR TO PANEL FABRICATION AND INSTALLATION. ALL ON-SITE PANEL SURVEY EFFORTS SHALL BE COORDINATED WITH TUNNEL MAINTENANCE AND THE ENGINEER.
4. AT PANELS 331 AND 332 ON THE SOUTH WALL, THE CONTINENTAL DIVIDE MARKER AND SIGNS SHALL BE REINSTALLED ONTO NEW PANELS AT THEIR EXISTING LOCATIONS. HARDWARE FOR REINSTALLATION SHALL BE NEW AND SHALL MATCH EXISTING SIGN HARDWARE.
5. DURING PANEL REMOVAL, ALL ANCHOR BOLTS THROUGH THE EXISTING TILE BLOCK PANELS SHALL BE CUT OFF TO 1/4" BELOW THE SURFACE OF THE CONCRETE OF THE TUNNEL LINING, AND THE HOLE SHALL BE PATCHED WITH AN APPROVED EPOXY GROUT. ANCHOR BOLTS THROUGH EXISTING TILE BLOCK PANELS ARE LOCATED IN PANELS NUMBERED 55, 158, 159, 214, 259, 260, 359, 360, 409, 410, 459, 460, 480, 486, 509, 560, 561, 589, 638, 660, 661, 760, 761, 781, 861, 862, 961, 962, 973, 1065, AND 1069 ON THE SOUTH WALL.
6. THE CONTRACTOR SHALL COORDINATE WITH THE ENGINEER THE FINAL SIZE AND LOCATION OF DRAIN CLEANOUTS UNDER COVER PLATES TO MINIMIZE THE NUMBER OF SPECIAL PANELS WITH DRAIN CLEANOUT COVER PLATES.
7. THE CONTRACTOR MAY ADJUST THE EXISTING PANEL LAYOUT TO REDUCE THE NUMBER OF SPECIAL PANELS AND TO INCREASE THE NUMBER OF PANELS THAT MEET THE DIMENSIONAL REQUIREMENTS SHOWN ON SHEET S-13. REVISIONS TO THE PANEL LAYOUT SHALL BE PROVIDED TO THE ENGINEER FOR REVIEW AND APPROVAL BEFORE THE PANEL SHOP DRAWINGS.

PANEL NUMBER	UTILITY/APPURTENANCE	RE-INSTALL	ABANDON	SPECIAL PANEL REQUIRED	COMMENTS
4	CO ANALYZER, ELECTRIC		X		
10, 11	DOORWAY	X			
14	CAMERA AND TWO EXTERNAL BOXES - ELECTRIC, TELEPHONE, COAX	X			
17	HEAT TRACE / ELECTRIC	X			
38	FIRE*EXTINGUISHER	X			SEE NOTE 5
42	HEAT TRACE / ELECTRIC	X			
50	ANCHOR		X		
57	CAMERA AND THREE EXTERNAL BOXES - ELECTRIC, TELEPHONE, COAX	X			
58, 59	AC PULLBOX / DC PULLBOX / TELEPHONE PULLBOX / COAX PULLBOX	X		X	
60	VMS PANEL	PANEL WILL NOT BE REPLACED			
61 BTM	DRAIN CLEANOUT COVER PLATE	X			
61 TOP	ANCHOR		X		
61, 62	AC PULLBOX / DC PULLBOX / TELEPHONE PULLBOX / COAX PULLBOX	X			
65 BTM	TELEPHONE CABINET	X			SEE NOTE 5
65 TOP	ELECTRIC LIGHT		X		
67	ELECTRIC BOX		X		
70	FIRE EXTINGUISHER CABINET	X		X	SEE NOTE 5
71	CABINET, LEAD WIRES FOR GAUGES		X		
79	DRAIN CLEANOUT COVER PLATE	X		X	SEE NOTE 4
92	ELECTRIC BOX		X		
96	ANCHOR		X		
97	DRAIN CLEANOUT COVER PLATE	X		X	SEE NOTE 4
101	FIRE EXTINGUISHER CABINET	X			SEE NOTE 5
104	ELECTRIC BOX		X		
105	HEAT TRACE / ELECTRIC	X			
110	AC PULLBOX / DC PULLBOX / TELEPHONE PULLBOX / COAX PULLBOX	X		X	
116	DRAIN CLEANOUT COVER PLATE	X			
117	ELECTRIC BOX		X		
129	ELECTRIC BOX		X		
133	FIRE EXTINGUISHER CABINET	X		X	SEE NOTE 5
135	DRAIN CLEANOUT COVER PLATE	X			
142	ELECTRIC BOX		X		
153	DRAIN CLEANOUT COVER PLATE	X		X	SEE NOTE 4
154	ELECTRIC BOX		X		
157	CAMERA AND TWO EXTERNAL BOXES - ELECTRIC, TELEPHONE, COAX	X			
158, 159	AC PULLBOX / DC PULLBOX / TELEPHONE PULLBOX / COAX PULLBOX	X		X	
160	VMS PANEL	PANEL WILL NOT BE REPLACED			
164	FIRE EXTINGUISHER CABINET	X		X	SEE NOTE 5
165 BTM	TELEPHONE CABINET	X			SEE NOTE 5
165 TOP	ELECTRIC LIGHT		X		
166	ELECTRIC BOX	X			
168	HEAT TRACE / ELECTRIC	X			
172	DRAIN CLEANOUT COVER PLATE	X		X	SEE NOTE 4
179	ELECTRIC BOX		X		
191 BTM	DRAIN CLEANOUT COVER PLATE	X			
191 TOP	ELECTRIC BOX		X		
195, 196	FIRE EXTINGUISHER CABINET	X			SEE NOTE 5
200	CABINET, LEAD WIRES FOR GAUGES		X		
203	ELECTRIC BOX		X		
207, 208	AC PULLBOX / DC PULLBOX / TELEPHONE PULLBOX / COAX PULLBOX	X		X	
210	DRAIN CLEANOUT COVER PLATE	X		X	SEE NOTE 4
216	ELECTRIC BOX		X		
227	FIRE EXTINGUISHER CABINET	PANEL WILL NOT BE REPLACED			
228	ELECTRIC BOX		X		
229	DRAIN CLEANOUT COVER PLATE	X		X	SEE NOTE 4
230	HEAT TRACE / ELECTRIC	X			
240	ELECTRIC BOX		X		
248	DRAIN CLEANOUT COVER PLATE	X		X	SEE NOTE 4

PANEL NUMBER	UTILITY/APPURTENANCE	RE-INSTALL	ABANDON	SPECIAL PANEL REQUIRED	COMMENTS
253	ELECTRIC BOX		X		
258 TOP	CAMERA AND TWO EXTERNAL BOXES - ELECTRIC, TELEPHONE, COAX	X			
258 BTM	FIRE EXTINGUISHER CABINET	X		X	SEE NOTE 5
259 TOP	AC PULLBOX / DC PULLBOX / TELEPHONE PULLBOX / COAX PULLBOX	X		X	
259 MDL	CO ANALYZER, ELECTRIC	X *		X	
259 BTM	CO ANALYZER, ELECTRIC		X		
261	VMS PANEL	PANEL WILL NOT BE REPLACED			
265 BTM	TELEPHONE CABINET	X		X	SEE NOTE 5
265 TOP	ELECTRIC BOX		X		
265	ELECTRIC LIGHT		X		
267	DRAIN CLEANOUT COVER PLATE	X		X	SEE NOTE 4
277	ELECTRIC BOX	PANEL WILL NOT BE REPLACED			
285	DRAIN CLEANOUT COVER PLATE	X		X	SEE NOTE 4
287	CABINET, LEAD WIRES FOR GAUGES		X		
289, 290	FIRE EXTINGUISHER CABINET	X			SEE NOTE 5
290	ELECTRIC BOX		X		
293	HEAT TRACE / ELECTRIC	X			
294	FIRE EXIT LIGHT / ELECTRIC	X			
294, 295	AC PULLBOX / DC PULLBOX / TELEPHONE PULLBOX / COAX PULLBOX	X			
295 L	WEST CROSSOVER	X		X	
295 R	CO ANALYZER, ELECTRIC		X		
302	ELECTRIC BOX		X		
304	DRAIN CLEANOUT COVER PLATE	X			
314	ELECTRIC BOX		X		
321	FIRE EXTINGUISHER CABINET	X		X	SEE NOTE 5
323	DRAIN CLEANOUT COVER PLATE	X			
324	HEAT TRACE / ELECTRIC	X			
324, 325	AC PULLBOX / DC PULLBOX / TELEPHONE PULLBOX / COAX PULLBOX	X		X	
327	ELECTRIC BOX		X		
331	CABINET, LEAD WIRES FOR GAUGES		X		
338	CABINET, LEAD WIRES FOR GAUGES		X		
339	ELECTRIC BOX		X		
345	CABINET, LEAD WIRES FOR GAUGES		X		
350 BTM	CABINET, LEAD WIRES FOR GAUGES		X		
350 TOP	ANCHOR		X		
352 BTM	FIRE EXTINGUISHER CABINET	X		X	SEE NOTE 5
352 TOP	ELECTRIC BOX		X		
356 BTM	HEAT TRACE / ELECTRIC		X		
356 TOP	ANCHOR		X		
357	CABINET, LEAD WIRES FOR GAUGES		X		
358	CAMERA AND TWO EXTERNAL BOXES - ELECTRIC, TELEPHONE, COAX	X			
359, 360	AC PULLBOX / DC PULLBOX / TELEPHONE PULLBOX / COAX PULLBOX	X		X	
360	VMS PANEL	PANEL WILL NOT BE REPLACED			
364 BTM	CABINET, LEAD WIRES FOR GAUGES		X		
364 TOP	ELECTRIC BOX		X		

NOTES:

1. FOR ADDITIONAL NOTES AND DETAILS OF SPECIAL PANELS, SEE SHEETS S-13 AND S-16.
2. TUNNEL SEGMENT SIGNS SHALL BE REINSTALLED ONTO NEW PANELS AT THEIR EXISTING LOCATIONS AT THE BEGINNING AND ENDING OF ALL TUNNEL SEGMENTS. HARDWARE FOR REINSTALLATION SHALL BE NEW AND SHALL MATCH EXISTING HARDWARE.
3. DURING PANEL REMOVAL, ALL ANCHOR BOLTS THROUGH THE EXISTING TILE BLOCK PANELS SHALL BE CUT OFF TO ¼" BELOW THE SURFACE OF THE CONCRETE OF THE TUNNEL LINING, AND THE HOLE SHALL BE PATCHED WITH AN APPROVED EPOXY GROUT. ANCHOR BOLTS THROUGH EXISTING TILE BLOCK PANELS ARE LOCATED IN PANELS NUMBERED 50, 61, 96, 350, 356, 400, 404, 486, 615, 672, 741, 824,931, 934, 943, 959, AND 1047 ON THE NORTH WALL.
4. THE CONTRACTOR SHALL CORDINATE WITH THE ENGINEER THE FINAL SIZE AND LOCATION OF HOLES FOR DRAIN CLEANOUTS UNDER COVER PLATES, TO MINIMIZE THE NUMBER OF SPECIAL PANELS WITH DRAIN CLEANOUT COVER PLATES.
5. HOLE LOCATIONS OF CABINETS FOR FIRE EXTINGUISHERS AND EMERGENCY TELEPHONES MAY BE SHIFTED UP TO THREE FEET LATERALLY, TO MINIMIZE THE NUMBER OF SPECIAL PANELS WITH THOSE CABINETS.
6. THE CONTRACTOR MAY ADJUST THE EXISTING PANEL LAYOUT TO REDUCE THE NUMBER OF SPECIAL PANELS AND TO INCREASE THE NUMBER OF PANELS THAT MEET THE DIMENSIONAL REQUIREMENTS SHOWN ON SHEET S-13. REVISIONS TO THE PANEL LAYOUT SHALL BE PROVIDED TO THE ENGINEER FOR REVIEW AND APPROVAL BEFORE THE PANEL SHOP DRAWINGS.

PANEL NUMBER	UTILITY/APPURTENANCE	RE-INSTALL	ABANDON	SPECIAL PANEL REQUIRED	COMMENTS
366 BTM	TELEPHONE CABINET	X		X	SEE NOTE 5
366 TOP	ELECTRIC LIGHT		X		
376	ELECTRIC BOX		X		
383, 384	FIRE EXTINGUISHER CABINET	X			SEE NOTE 5
389	ELECTRIC BOX		X		
400	ANCHOR		X		
401	ELECTRIC BOX		X		
404	ANCHOR		X		
409, 410 BTM	CO ANALYZER, ELECTRIC		X		
409, 410 TOP	CO ANALYZER, ELECTRIC	X			
410, 411	AC PULLBOX / DC PULLBOX / TELEPHONE PULLBOX / COAX PULLBOX	X		X	
413	ELECTRIC BOX		X		
415	FIRE EXTINGUISHER CABINET	X			SEE NOTE 5
419	HEAT TRACE / ELECTRIC	X			
426	ELECTRIC BOX		X		
428	CABINET, LEAD WIRES FOR GAUGES		X		
438 BTM	CABINET, LEAD WIRES FOR GAUGES		X		
438 TOP	ELECTRIC BOX		X		
446	FIRE EXTINGUISHER CABINET	X			SEE NOTE 5
450	ELECTRIC BOX		X		
456	CABINET, LEAD WIRES FOR GAUGES		X		
458, 459	CAMERA AND TWO EXTERNAL BOXES - ELECTRIC, TELEPHONE, COAX	X			
459, 460	AC PULLBOX / DC PULLBOX / TELEPHONE PULLBOX / COAX PULLBOX	X		X	
461	VMS PANEL	PANEL WILL NOT BE REPLACED			
463	ELECTRIC BOX		X		
465 BTM	TELEPHONE CABINET	X		X	SEE NOTE 5
465 TOP	ELECTRIC LIGHT		X		
469	CABINET, LEAD WIRES FOR GAUGES		X		
474	DRAIN CLEANOUT COVER PLATE	X		X	SEE NOTE 4
477, 478	FIRE EXTINGUISHER CABINET	X			SEE NOTE 5
481	HEAT TRACE / ELECTRIC	X			
486	ANCHOR		X		
488	ELECTRIC BOX		X		
493	DRAIN CLEANOUT COVER PLATE	X			
500	ELECTRIC BOX		X		
506, 507	AC PULLBOX / DC PULLBOX / TELEPHONE PULLBOX / COAX PULLBOX	X		X	
509	FIRE EXTINGUISHER CABINET	X			SEE NOTE 5
511	DRAIN CLEANOUT COVER PLATE	X			
512	ELECTRIC BOX		X		
525	ELECTRIC BOX		X		
531	DRAIN CLEANOUT COVER PLATE	X		X	SEE NOTE 4
537	ELECTRIC BOX		X		
544	HEAT TRACE / ELECTRIC	X			
545	FIRE EXIT LIGHT / ELECTRIC	X			
545, 546 BTM	CENTER CROSSOVER	X			
545, 546 TOP	AC PULLBOX / DC PULLBOX / TELEPHONE PULLBOX / COAX PULLBOX	X			
546	CO ANALYZER, ELECTRIC		X		
547	ANEMOMETER	X			
549	ELECTRIC BOX		X		
553	FIRE EXTINGUISHER CABINET	X		X	SEE NOTE 5
559	CAMERA AND TWO EXTERNAL BOXES - ELECTRIC, TELEPHONE, COAX	X			
560 BTM	CO ANALYZER, ELECTRIC		X		
560 MDL	CO ANALYZER, ELECTRIC	X		X	
560 TOP	AC PULLBOX / DC PULLBOX / TELEPHONE PULLBOX / COAX PULLBOX	X		X	
561	VMS PANEL	PANEL WILL NOT BE REPLACED			
562	ELECTRIC BOX		X		
566	ELECTRIC LIGHT		X		
566, 567	TELEPHONE CABINET	X		X	SEE NOTE 5

PANEL NUMBER	UTILITY/APPURTENANCE	RE-INSTALL	ABANDON	SPECIAL PANEL REQUIRED	COMMENTS
569	CABINET, LEAD WIRES FOR GAUGES		X		
572	FIRE EXTINGUISHER CABINET	X		X	SEE NOTE 5
574	ELECTRIC BOX		X		
576	HEAT TRACE / ELECTRIC	X			
580	CABINET, LEAD WIRES FOR GAUGES		X		
581 L	CABINET, LEAD WIRES FOR GAUGES		X		
581 R	CABINET, LEAD WIRES FOR GAUGES		X		
586	ELECTRIC BOX		X		
593	CABINET, LEAD WIRES FOR GAUGES		X		
599	ELECTRIC BOX		X		
600	CABINET, LEAD WIRES FOR GAUGES		X		
602, 603	FIRE EXTINGUISHER CABINET	X			SEE NOTE 5
611 BTM	AC PULLBOX / DC PULLBOX / TELEPHONE PULLBOX / COAX PULLBOX	X		X	
611 TOP	ELECTRIC BOX		X		
615	ANCHOR		X		
624 BTM	CABINET, LEAD WIRES FOR GAUGES		X		
624 TOP	ELECTRIC BOX		X		
634, 635	FIRE EXTINGUISHER CABINET	X			SEE NOTE 5
636	ELECTRIC BOX		X		
638	HEAT TRACE / ELECTRIC	X			
648	ELECTRIC BOX		X		
652	CABINET, LEAD WIRES FOR GAUGES		X		
659, 660	CAMERA AND TWO EXTERNAL BOXES - ELECTRIC, TELEPHONE, COAX	X			
660, 661	AC PULLBOX / DC PULLBOX / TELEPHONE PULLBOX / COAX PULLBOX	X		X	
661	ELECTRIC BOX		X		
662	VMS PANEL	PANEL WILL NOT BE REPLACED			
666	FIRE EXTINGUISHER CABINET	X			SEE NOTE 5
667 BTM	TELEPHONE CABINET	X		X	SEE NOTE 5
667 TOP	ELECTRIC LIGHT		X		
671	CABINET, LEAD WIRES FOR GAUGES		X		
672	ANCHOR		X		
673	ELECTRIC BOX		X		
675	CABINET, LEAD WIRES FOR GAUGES		X		
681	CABINET, LEAD WIRES FOR GAUGES		X		
685	ELECTRIC BOX		X		
697	FIRE EXTINGUISHER CABINET	X			SEE NOTE 5
698	ELECTRIC BOX		X		
699, 700	CABINET, LEAD WIRES FOR GAUGES		X		
701	HEAT TRACE / ELECTRIC	X			
710	ELECTRIC BOX		X		
710, 711	CO ANALYZER, ELECTRIC	X			
711	CO ANALYZER, ELECTRIC		X		
711, 712	AC PULLBOX / DC PULLBOX / TELEPHONE PULLBOX / COAX PULLBOX	X		X	
713	CABINET, LEAD WIRES FOR GAUGES		X		
722	ELECTRIC BOX		X		
726	CABINET, LEAD WIRES FOR GAUGES		X		
729	FIRE EXTINGUISHER CABINET	X			SEE NOTE 5
735	ELECTRIC BOX		X		
741	ANCHOR		X		
747	ELECTRIC BOX		X		
759, 760	CAMERA AND TWO EXTERNAL BOXES - ELECTRIC, TELEPHONE, COAX	X			
760 BTM	FIRE EXTINGUISHER CABINET	X		X	SEE NOTE 5
760 TOP	ELECTRIC BOX		X		
760, 761	AC PULLBOX / DC PULLBOX / TELEPHONE PULLBOX / COAX PULLBOX	X		X	
762	VMS PANEL	PANEL WILL NOT BE REPLACED			
763	CABINET, LEAD WIRES FOR GAUGES		X		
764	HEAT TRACE / ELECTRIC	X			
767 BTM	TELEPHONE CABINET	X		X	SEE NOTE 5

NOTES:
1. FOR NOTES, SEE SHEET S-17.

Print Date: 2/14/2008
File Name: EJMT_TO_01_16.dgn
Horiz. Scale: As Noted Vert. Scale: As Noted
Unit 0221 Unit Leader STW

PARSONS
1700 Broadway Suite 900
Denver, CO 80290
(303) 863-7900

Sheet Revisions

Date:	Comments	Init.

Colorado Department of Transportation
DOT
P.O. Box 399
Dumont, CO 80436
Phone: (303) 512-5750
Fax: (303) 512-5775
Region 1 Mountain Residency R.M.S.

As Constructed
No Revisions: 9/30/09
Revised:
Void:

EISENHOWER/JOHNSON MEMORIAL TUNNEL
PANEL REPLACEMENT PROJECT
TABLE OF SPECIAL PANELS
NORTH WALL (II)

Designer: J. BRAAKSMA
Detailer: J. SPANIER
Structure Numbers: F-13-X
Sheet Subset:
Subsel Sheets: S-18 of S-19

Project No./Code
IM-0703-322
16102
Sheet Number 20

PANEL NUMBER	UTILITY/APPURTENANCE	RE-INSTALL	ABANDON	SPECIAL PANEL REQUIRED	COMMENTS
767 TOP	ELECTRIC LIGHT		X		
769	CABINET, LEAD WIRES FOR GAUGES		X		
772	ELECTRIC BOX		X		
784	ELECTRIC BOX		X		
791, 792	FIRE EXTINGUISHER CABINET	X			SEE NOTE 5
794	DRAIN CLEANOUT COVER PLATE	X		X	SEE NOTE 4
795	AC PULLBOX / DC PULLBOX / TELEPHONE PULLBOX / COAX PULLBOX	X		X	
797	ELECTRIC BOX		X		
809	ELECTRIC BOX		X		
812	DRAIN CLEANOUT COVER PLATE	X			
819, 820	CABINET, LEAD WIRES FOR GAUGES		X		
820	CABINET, LEAD WIRES FOR GAUGES		X		
821, 822 BTM	EAST CROSSOVER	X			
821, 822 TOP	AC PULLBOX / DC PULLBOX / TELEPHONE PULLBOX / COAX PULLBOX	X			
822 BTM	CO ANALYZER, ELECTRIC		X		
822 TOP	FIRE EXIT LIGHT / ELECTRIC	X			
823	FIRE EXTINGUISHER CABINET	X		X	SEE NOTE 5
824	ANCHOR		X		
827	HEAT TRACE / ELECTRIC	X			
831	DRAIN CLEANOUT COVER PLATE	X		X	SEE NOTE 4
831, 832	CABINET, LEAD WIRES FOR GAUGES		X		
834	ELECTRIC BOX		X		
837	CABINET, LEAD WIRES FOR GAUGES		X		
846	ELECTRIC BOX		X		
850	DRAIN CLEANOUT COVER PLATE	X			
854	FIRE EXTINGUISHER CABINET	X		X	SEE NOTE 5
858	ELECTRIC BOX		X		
860, 861	CAMERA AND TWO EXTERNAL BOXES - ELECTRIC, TELEPHONE, COAX	X			
861 BTM	CO ANALYZER, ELECTRIC		X		
861, 862	CO ANALYZER, ELECTRIC	X			
861 TOP	AC PULLBOX / DC PULLBOX / TELEPHONE PULLBOX / COAX PULLBOX	X		X	
863	VMS PANEL	PANEL WILL NOT BE REPLACED			
868 L	TELEPHONE CABINET	PANEL WILL NOT BE REPLACED			
868	ELECTRIC LIGHT	PANEL WILL NOT BE REPLACED			
868 R	CABINET	PANEL WILL NOT BE REPLACED			
874	CABINET	PANEL WILL NOT BE REPLACED			
879, 880	CABINET, LEAD WIRES FOR GAUGES		X		
883	ELECTRIC BOX		X		
885, 886	FIRE EXTINGUISHER CABINET	X			SEE NOTE 5
889	HEAT TRACE / ELECTRIC	X			
895, 896	ELECTRIC BOX		X		
906	DRAIN CLEANOUT COVER PLATE	X		X	SEE NOTE 4
908 BTM	CABINET, LEAD WIRES FOR GAUGES		X		
908 TOP	ELECTRIC BOX		X		
912, 913	AC PULLBOX / DC PULLBOX / TELEPHONE PULLBOX / COAX PULLBOX	X		X	
917	FIRE EXTINGUISHER CABINET	X			SEE NOTE 5
920	ELECTRIC BOX		X		
931	ANCHOR		X		
933	ELECTRIC BOX		X		
934	ANCHOR		X		
943	ANCHOR		X		
945 BTM	DRAIN CLEANOUT COVER PLATE	X			
945 TOP	ELECTRIC BOX		X		
947	CABINET, LEAD WIRES FOR GAUGES		X		
947, 948	CABINET, LEAD WIRES FOR GAUGES		X		
948, 949	FIRE EXTINGUISHER CABINET	X			SEE NOTE 5
952	HEAT TRACE / ELECTRIC	X			
957	ELECTRIC BOX		X		

PANEL NUMBER	UTILITY/APPURTENANCE	RE-INSTALL	ABANDON	SPECIAL PANEL REQUIRED	COMMENTS
959	ANCHOR		X		
960, 961	CAMERA AND TWO EXTERNAL BOXES - ELECTRIC, TELEPHONE, COAX	X			
961, 962	AC PULLBOX / DC PULLBOX / TELEPHONE PULLBOX / COAX PULLBOX	X		X	
963	VMS PANEL	PANEL WILL NOT BE REPLACED			
968 BTM	TELEPHONE CABINET	X			SEE NOTE 5
968 TOP	ELECTRIC LIGHT		X		
970	ELECTRIC BOX		X		
973	CABINET, LEAD WIRES FOR GAUGES		X		
980	FIRE EXTINGUISHER CABINET	X		X	SEE NOTE 5
982 BTM	DRAIN CLEANOUT COVER PLATE	X		X	SEE NOTE 4
982 TOP	ELECTRIC BOX		X		
994	ELECTRIC BOX		X		
1001	DRAIN CLEANOUT COVER PLATE	X		X	SEE NOTE 4
1007	ELECTRIC BOX		X		
1012	FIRE EXTINGUISHER CABINET	X			SEE NOTE 5
1013	AC PULLBOX / DC PULLBOX / TELEPHONE PULLBOX / COAX PULLBOX	X		X	
1015	HEAT TRACE / ELECTRIC	X			
1019	ELECTRIC BOX		X		
1020	DRAIN CLEANOUT COVER PLATE	X		X	SEE NOTE 4
1032	ELECTRIC BOX		X		
1034, 1035	CABINET, LEAD WIRES FOR GAUGES		X		
1038	DRAIN CLEANOUT COVER PLATE	X			
1042, 1043	FIRE EXTINGUISHER CABINET	X			SEE NOTE 5
1043	CABINET, LEAD WIRES FOR GAUGES		X		
1044	ELECTRIC BOX		X		
1047	ANCHOR		X		
1056	ELECTRIC BOX		X		
1061	HEAT TRACE / ELECTRIC	X			
1063	VMS PANEL	PANEL WILL NOT BE REPLACED			
1065	AC PULLBOX / DC PULLBOX / TELEPHONE PULLBOX / COAX PULLBOX	X		X	
1069 BTM	TELEPHONE CABINET	X			SEE NOTE 5
1069 TOP	ELECTRIC LIGHT		X		
1073	FIRE EXTINGUISHER CABINET	X		X	SEE NOTE 5
1078	HEAT TRACE / ELECTRIC	X			
1103	HEAT TRACE / ELECTRIC	X			
1104	DOORWAY	X		X	
1109	DOORWAY	X		X	
1109, 1110	VENT	X			
1114	CO ANALYZER, ELECTRIC		X		
1115	VENT	X		X	

NOTES:
1. FOR NOTES, SEE SHEET S-17.

Print Date: 2/14/2008
File Name: EJMT_TO_01_16.dgn
Horiz. Scale: As Noted Vert. Scale: As Noted
Unit 0221 Unit Leader STW

PARSONS
1700 Broadway Suite 900
Denver, CO 80290
(303) 863-7900

Sheet Revisions

Date:	Comments	Init.

Colorado Department of Transportation
DOT
P.O. Box 399
Dumont, CO 80436
Phone: (303) 512-5750
Fax: (303) 512-5775
Region 1 Mountain Residency R.M.S.

As Constructed
No Revisions: 9/30/09
Revised:
Void:

EISENHOWER/JOHNSON MEMORIAL TUNNEL
PANEL REPLACEMENT PROJECT
TABLE OF SPECIAL PANELS
NORTH WALL (III)

Designer: J. BRAAKSMA
Detailer: J. SPANIER
Sheet Subset:
Structure Numbers: F-13-X
Subset Sheets: S-19 of S-19

Project No./Code
IM-0703-322
16102
Sheet Number 21

GENERAL NOTES

1. ALL CONSTRUCTION ZONE TRAFFIC CONTROL DEVICES, INCLUDING BUT NOT LIMITED TO BARRICADES, SIGNS, ARROW PANELS, FLASHING BEACON (PORTABLE), AND CHANNELIZING DEVICES, SHALL BE FURNISHED, INSTALLED, MAINTAINED (INCLUDING WASHING), REPLACED IF DAMAGED, REMOVED WHEN TEMPORARILY NOT IN USE AND RETURNED WHEN REQUIRED, RESET AS NECESSARY DURING THE PROGRESS OF CONSTRUCTION, AND REMOVED ENTIRELY WHEN THE PROJECT IS COMPLETED. ALL DEVICES SHALL MEET THE REQUIREMENTS OF ATSSA "QUALITY STANDARDS FOR WORK ZONE TRAFFIC CONTROL - 1992"

2. WORK ON THE PROJECT SHALL NOT BE STARTED UNTIL ALL REQUIRED TRAFFIC CONTROL DEVICES ARE IN PLACE, AND APPROVED BY THE ENGINEER.

3. WHEN SPEED LIMIT REDUCTION IS REQUIRED, SUCH REDUCTION SHALL BE IN ACCORDANCE WITH CDOT FORM 568, "AUTHORIZATION AND DECLARATION OF TEMPORARY SPEED LIMITS."

   WHEN A CHANGE IN AN EXISTING SPEED LIMIT IS REQUIRED, THE R2-1 SIGNS, SHOWN ON THE SCHEDULE OF CONSTRUCTION TRAFFIC CONTROL DEVICES, SHOULD BE INSTALLED AT THE LOCATIONS SHOWN ON THE TYPICAL CASES BY R2-1 (OPTIONAL) SIGNS.

   AN ADVISORY SPEED PLATE (W13-1) MAY BE USED WITH A WARNING SIGN WHEN THE MAXIMUM RECOMMENDED SPEED FOR CONDITION NAMED IS LOWER THAN THE POSTED SPEED LIMIT.

   THE REGULATORY OR ADVISORY SPEED REDUCTION DISPLAYED SHALL NOT EXCEED 15 MPH PER SIGN INSTALLATION.

4. ANY TRAFFIC CONTROL DEVICE THAT IS DAMAGED, WEATHERED, WORN, OR OTHERWISE DEEMED UNACCEPTABLE BY THE ENGINEER, SHALL BE REPLACED.

5. CONTRACTOR AND PERSONAL VEHICLE PARKING IS PROHIBITED WITHIN THE RIGHT-OF-WAY UNLESS DESIGNATED ON THE PLANS, OR APPROVED BY THE ENGINEER.

6. CONSTRUCTION TRAFFIC SIGNS SHALL BE MEASURED BY THE FOLLOWING SIZES AND DESCRIPTIONS:

PANEL SIZE A	0.01 TO 9.00 SQ. FT. (INCLUDING TYPE 1 AND TYPE 2 BARRICADES).
PANEL SIZE B	9.01 TO 16.00 SQ. FT.
PANEL SIZE C	GREATER THAN 16 SQ. FT.

   CONSTRUCTION TRAFFIC SIGN (SPECIAL), SQ. FT., MAY BE USED FOR SOME PROJECT SPECIFIC INFORMATION SIGNS.

   FOR DETAILED DIMENSIONS OF SIGNS WITH SIGN CODE NUMBERS, SEE "STANDARD HIGHWAY SIGNS" AND THE "COLORADO SUPPLEMENT" THERETO. SIGN LAYOUTS FOR OTHER SIGNS WILL BE FURNISHED IN THE PLANS, TRANSMITTED TO THE ENGINEER AFTER AWARD, OR MAY BE AVAILABLE UPON REQUEST.

   W20-5 WARNING SIGNS SHALL BE FURNISHED WITH EXCHANGEABLE PLAQUES READING "RIGHT", "LEFT", "CENTER", "RIGHT 2", ETC. AT NO ADDITIONAL COST.

7. ALL WARNING AND REGULATORY SIGNS SHALL BE POSTED ON BOTH SIDES OF THE ROADWAY ON DIVIDED HIGHWAYS, MULTI-LANE RAMPS, ONE-WAY STREETS, AND AS DIRECTED BY THE ENGINEER, EXCEPT WHERE ONLY ONE SHOULDER IS CLOSED (EX: CASE 11 ON SHEET 6).

8. ADDITIONAL TRAFFIC CONTROL DEVICES ADDRESSING FLAGGING, SPEED REDUCTION, ETC. WILL BE NECESSARY FOR SET-UP AND TAKE-DOWN OF MOST CASE APPLICATIONS; DAILY WORK SITE ACCESS; AND PAVEMENT MARKING REMOVAL AND INSTALLATION OPERATIONS.

9. BASED ON SIGHT DISTANCE AND OTHER CONSIDERATIONS, THE FINAL LOCATIONS OF SIGNS ARE SUBJECT TO APPROVAL OF THE ENGINEER.

10. IF CONSTRUCTION RELATED TRAFFIC CONGESTION BACKS UP BEYOND THE INSTALLED ADVANCE SIGN SEQUENCE, ADDITIONAL ADVANCE SIGNING SHALL BE PLACED BEYOND THE CONGESTION.

11. ALL SIGN MATERIAL SHALL BE SOUND AND DURABLE TO THE DEGREE NECESSARY FOR MAINTAINING EFFECTIVE AND NEAT APPEARING TRAFFIC CONTROLS, AND:

    a. SIGN PANELS MAY BE FABRICATED FROM PLYWOOD, STEEL, ALUMINUM, OR OTHER SUITABLE MATERIAL.
    b. REFLECTIVE SHEETING SHALL CONFORM TO ASTM D4956. THE TYPE SHALL BE AS DESCRIBED IN THE STANDARD SPECIFICATIONS AND/OR AS SHOWN ON THE PLANS.
    c. SYMBOLS AND LEGEND SHALL BE OF GOOD WORKMANSHIP (UNEVEN OR HAND LETTERING WILL NOT BE ACCEPTED).
    d. PORTABLE OR TEMPORARY MOUNTING SHALL NOT BE CONSTRUCTED OR WEIGHTED BY ANY METHOD OR MATERIAL THAT MAKES THEM HAZARDOUS TO TRAFFIC.
    e. CERTAIN POST SIZES AND SHAPES REQUIRE A "BREAK-AWAY" DEVICE. SEE THE APPLICABLE STANDARD PLAN. OTHER POST DESIGNS OR SYSTEMS REQUIRE THE SUBMITTAL OF AN FHWA LETTER OF ACCEPTANCE TO THE ENGINEER, AND MUST BE APPROVED BY THE ENGINEER PRIOR TO THEIR USE.

12. ALL CONSTRUCTION SIGN PLACEMENT SHALL BE IN ACCORDANCE WITH STANDARD PLAN "TYPICAL GROUND SIGN PLACEMENT" UNLESS OTHERWISE APPROVED.

    SIGNS APPROVED TO BE MOUNTED ON PORTABLE SUPPORTS, OR APPROPRIATE SIGNS MOUNTED ON BARRICADES, MAY BE AT LOWER HEIGHTS, BUT THE BOTTOM OF THE SIGNS SHALL NOT BE LESS THAN ONE FOOT ABOVE THE PAVEMENT ELEVATION.

13. SIGNS MOUNTED ON THE MEDIAN OF DIVIDED HIGHWAYS WHERE MEDIAN BARRIER IS IN PLACE MAY BE MOUNTED ON THE BARRIER WITH A SADDLE TYPE BRACKET. IF THE BRACKET ALLOWS THE SIGN PANEL TO BE TURNED PARALLEL TO THE ROADWAY, THE SIGN MAY REMAIN IN PLACE WHEN NOT APPLICABLE, BUT LAYING THE SIGN PANEL DOWN IN A HORIZONTAL POSITION IS NOT PERMITTED.

14. TRAFFIC CONES SHALL BE AT LEAST 28 INCHES IN HEIGHT. HOWEVER, THE MINIMUM SIZE SHALL BE 36 INCHES WHEN THEY ARE USED ON FREEWAYS AND EXPRESSWAYS, OR DURING NIGHT TIME WORKING HOURS. THEY SHOULD ALSO BE 36 INCHES WHEN USED ON OTHER HIGH SPEED ROADWAYS (45 MPH OR MORE) WITH AN ADT OF 6,000 OR MORE.

15. TYPE 1 BARRICADES AND VERTICAL PANELS SHALL NOT BE USED ON FREEWAYS, EXPRESSWAYS, OR OTHER HIGH SPEED ROADWAYS (45 MPH OR MORE).

16. WHEN TWO-WAY TRAFFIC IS PLACED ON ONE ROADWAY OF A NORMALLY DIVIDED HIGHWAY, OPPOSING TRAFFIC SHALL BE SEPARATED EITHER WITH CONCRETE BARRIER (TEMPORARY), OR WITH CHANNELIZING DEVICES APPROVED FOR THIS APPLICATION, THROUGHOUT THE LENGTH OF TWO-WAY OPERATION. THE TRANSITION ZONES SHALL HAVE CONCRETE BARRIER (TEMPORARY). THE BARRIER SHALL BE TIED TO AN EXISTING STRUCTURE OR GUARD RAIL, FLARED OR EXTENDED TO MEET CLEAR ZONE REQUIREMENTS, OR FITTED WITH AN IMPACT ATTENUATION DEVICE.

17. CHANNELIZING DEVICE SPACING, IN FEET, SHALL BE AS FOLLOWS:
    a. FOR TAPERS AND TRANSITIONS, SPACING EQUALS THE NUMERICAL VALUE OF THE SPEED LIMIT. (e.g. 45 MPH = 45 FEET)
    b. FOR TANGENTS ALONG THE BUFFER SPACE OR WORK AREA, SPACING MAY NOT BE GREATER THAN TWO TIMES THE SPEED LIMIT. (e.g. 50 MPH = 50 FEET TO 100 FEET MAXIMUM)

18. FOR DETAILS ON BARRICADES, CONCRETE BARRIER (TEMPORARY), VERTICAL PANELS, AND FLASHING BEACON (PORTABLE), SEE THE APPLICABLE STANDARD PLANS.

19. FLOOD LIGHTS SHALL BE USED TO ILLUMINATE FLAGGER STATIONS DURING THE HOURS OF DARKNESS UNLESS OTHERWISE APPROVED. A TYPICAL LIGHT SHOULD PROVIDE THE FOLLOWING: A FULLY DIRECTIONAL SWIVEL MOUNT QUARTZ LIGHT SOURCE (500 WATT MINIMUM), SELF-SUPPORTING STAND WITH VARIABLE LIGHT HEIGHT FROM OF MINIMUM OF EIGHT FEET ABOVE THE ROADWAY, AND A POWER SOURCE. IT SHALL ILLUMINATE THE STATION AREA AND A FLAGGER ESCAPE PATH, BUT SHALL NOT PRESENT ANY GLARE TO TRAFFIC.

20. IF WORK ON THE ROADWAY IS FOR AN EXTENDED PERIOD, INAPPLICABLE PAVEMENT MARKINGS ARE TO BE REMOVED, AND FULL COMPLIANCE PAVEMENT MARKINGS ARE TO BE INSTALLED IN ACCORDANCE WITH THE APPLICABLE SPECIFICATIONS, (PAVEMENT MARKING - GENERAL), AND/OR AS DETAILED ON THE PLANS.

    FOR ADDITIONAL PAVEMENT MARKING DETAILS, SEE STANDARD PLAN "TYPICAL PAVEMENT MARKINGS".

21. BUFFER SPACE IS OPTIONAL. NEED MUST BE DETERMINED ON A PROJECT OR SITE SPECIFIC BASIS AS DIRECTED BY THE ENGINEER. WHEN A BUFFER SPACE IS USED, DIMENSIONS AND/OR DEVICES USED ARE TO BE INCORPORATED IN THE TRAFFIC CONTROL PLAN (TCP) OR THE CONTRACTOR'S METHOD OF HANDLING TRAFFIC (MHT).

22. ADDITIONAL VMS SIGNAGE SHOULD BE CONSIDERED AT LEAST A MILE IN ADVANCE OF THE SIGNING SHOWN IN THE DETAIL FOR ANY LANE CLOSURES ON INTERSTATE AND OTHER HIGH SPEED FACILITIES ESPECIALLY WHEN THE LEVEL OF SERVICE IS SIGNIFICANTLY REDUCED AS A RESULT OF CONSTRUCTION. THE LEGENDS SHOULD BE CHANGED TO ADVISE MOTORISTS OF UPCOMING TRAFFIC CONDITIONS AND TO ALERT THEM OF UPCOMING LANE USAGE.

    ADDITIONAL ADVANCE WARNING SIGNAGE IS ENCOURAGED IN ALL CASES WHERE TRAFFIC VOLUMES AND SPEEDS ARE HIGH AND/OR WHERE THERE ARE INFREQUENT EXITS. ADDITIONAL SIGNAGE IS ALSO ENCOURAGED IN LOCATIONS WHERE DRIVERS' LINE OF SIGHT TO ADVANCE WARNING SIGNS IS OBSTRUCTED.

23. RAISED PAVEMENT MARKERS MAY BE USED TO SUPPLEMENT TEMPORARY STRIPING DURING NON-SNOW PERIODS. THEIR USE IS ENCOURAGED ON HIGHER SPEED FACILITIES WHEN TRAFFIC IS BEING DIVERTED FROM ITS USUAL COURSE.

24. THE TYPICAL CASES DEPICTED IN THIS STANDARD REFLECT THE MINIMUM REQUIREMENTS, UNLESS AS OTHERWISE DIRECTED BY THE PROJECT PLANS AND SPECIFICATIONS, AND/OR THE PROJECT ENGINEER.

NO REVISIONS 9/30/09 JK

Computer File Information	
Creation Date: 07-04-06	Initials: KCM
Last Modification Date: 07-04-06	Initials: JSW
Full Path:www.dot.state.co.us/DesignSupport/	
Drawing File Name: S-630-1 (1 of 12)	
CAD Ver.: MicroStation V8 Scale: Not to Scale	Units: English

Sheet Revisions	
Date:	Comments

Colorado Department of Transportation
4201 East Arkansas Avenue
Denver, Colorado 80222
Phone: (303) 757-9543
Fax: (303) 757-9820
Staff Traffic Branch KCM/JSW

TRAFFIC CONTROLS FOR HIGHWAY CONSTRUCTION

Issued By: Traffic Engineering Unit July 4, 2006

STANDARD PLAN NO.

S-630-1

Sheet No. 1 of 12

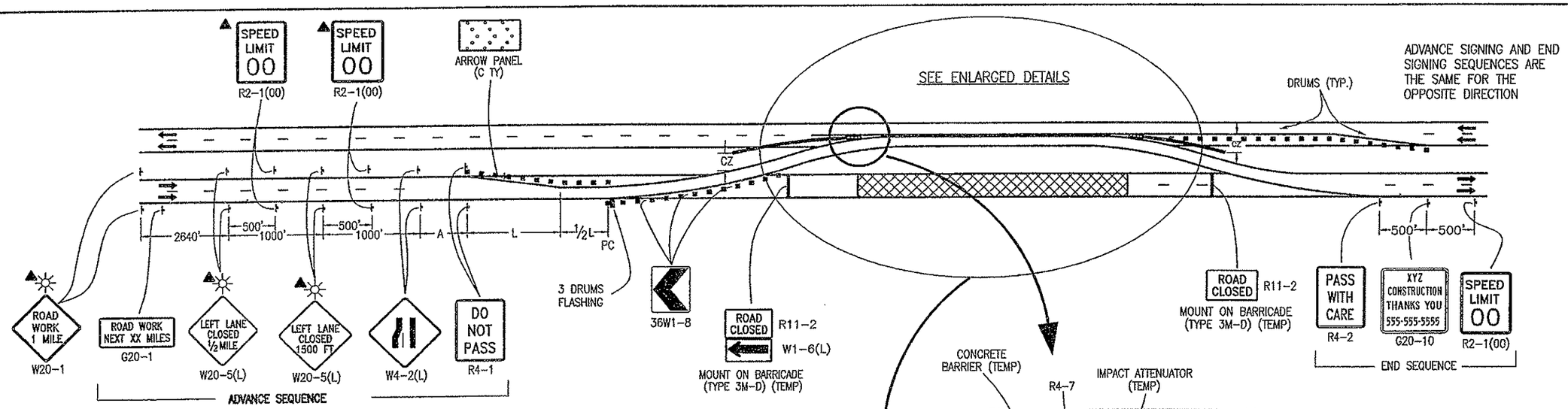

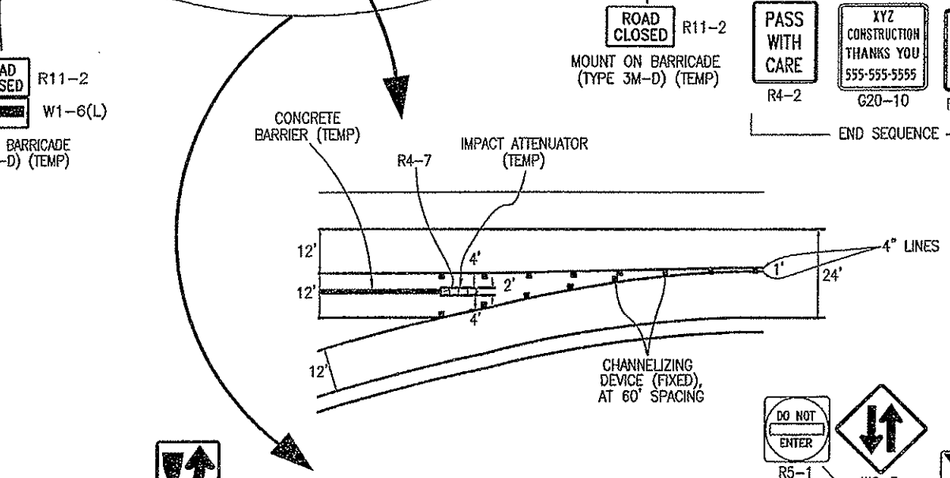

LEGEND

- CHANNELIZING DEVICE: FOR TYPE OF DEVICE TO BE USED, SEE SCHEDULE OF TRAFFIC CONTROL DEVICES INCLUDED IN THE PLANS.
- TYPE III BARRICADE
- CONCRETE BARRIER (TEMPORARY)
- FLAGGER
- DIRECTION OF TRAVEL
- WORK AREA
- L TRANSITION TAPER LENGTH:
  - L = MINIMUM LENGTH OF TAPER
  - SPEED 45 MPH OR MORE: L = S x W
  - SPEED 40 MPH OR LESS: $L = \frac{WS^2}{60}$
  - S = NUMERICAL VALUE OF SPEED LIMIT OR 85 PERCENTILE SPEED
  - W = WIDTH OF OFFSET
- ADVANCE WARNING FLASHING OR SEQUENCING ARROW PANEL
- A = 100' (URBAN LOW SPEED)
  350' (URBAN HIGH SPEED)
  500' (RURAL)
  1,000' (EXPRESSWAY / FREEWAY)
- CZ CLEAR ZONE (SEE GENERAL NOTE 16).
- ▲ THESE DEVICES ARE OPTIONAL. THEIR NEED SHALL BE DETERMINED BY DETOUR DESIGN AND/OR SCOPE OF CONSTRUCTION ACTIVITY, AND ARE REQUIRED WHEN THEY ARE INCLUDED IN THE SCHEDULE OF CONSTRUCTION CONTROL DEVICES.
- VARIES BUFFER SPACE (SEE GENERAL NOTE 21).
- IMPACT ATTENUATOR AS DETAILED ON THE PLANS
- FLASHING BEACON

TYPICAL 2-WAY ZONE STRIPING

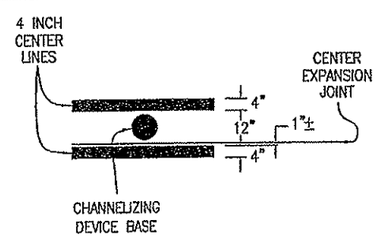

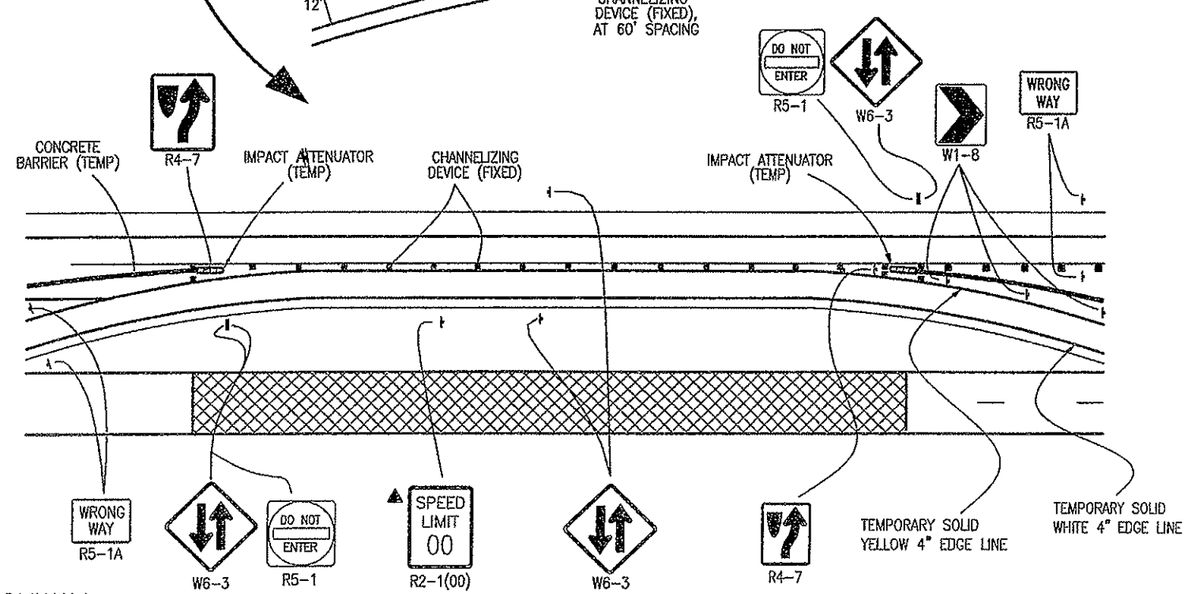

CASE NO. 1
TYPICAL APPLICATION
CLOSURE OF ONE ROADWAY 4-LANE DIVIDED HIGHWAY

NO REVISIONS 9/30/09 GK

Computer File Information		Sheet Revisions	
Creation Date: 07-04-06	Initials: KCM	Date:	Comments
Last Modification Date: 07-04-06	Initials: JSW		
Full Path:www.dot.state.co.us/DesignSupport/			
Drawing File Name: S-630-1 (2 of 12)			
CAD Ver.: MicroStation V8 Scale: Not to Scale Units: English			

Colorado Department of Transportation
4201 East Arkansas Avenue
Denver, Colorado 80222
Phone: (303) 757-9543
Fax: (303) 757-9820
Staff Traffic Branch KCM/JSW

TRAFFIC CONTROLS FOR HIGHWAY CONSTRUCTION

Issued By: Traffic Engineering Unit July 4, 2006

STANDARD PLAN NO.
S-630-1
Sheet No. 2 of 12

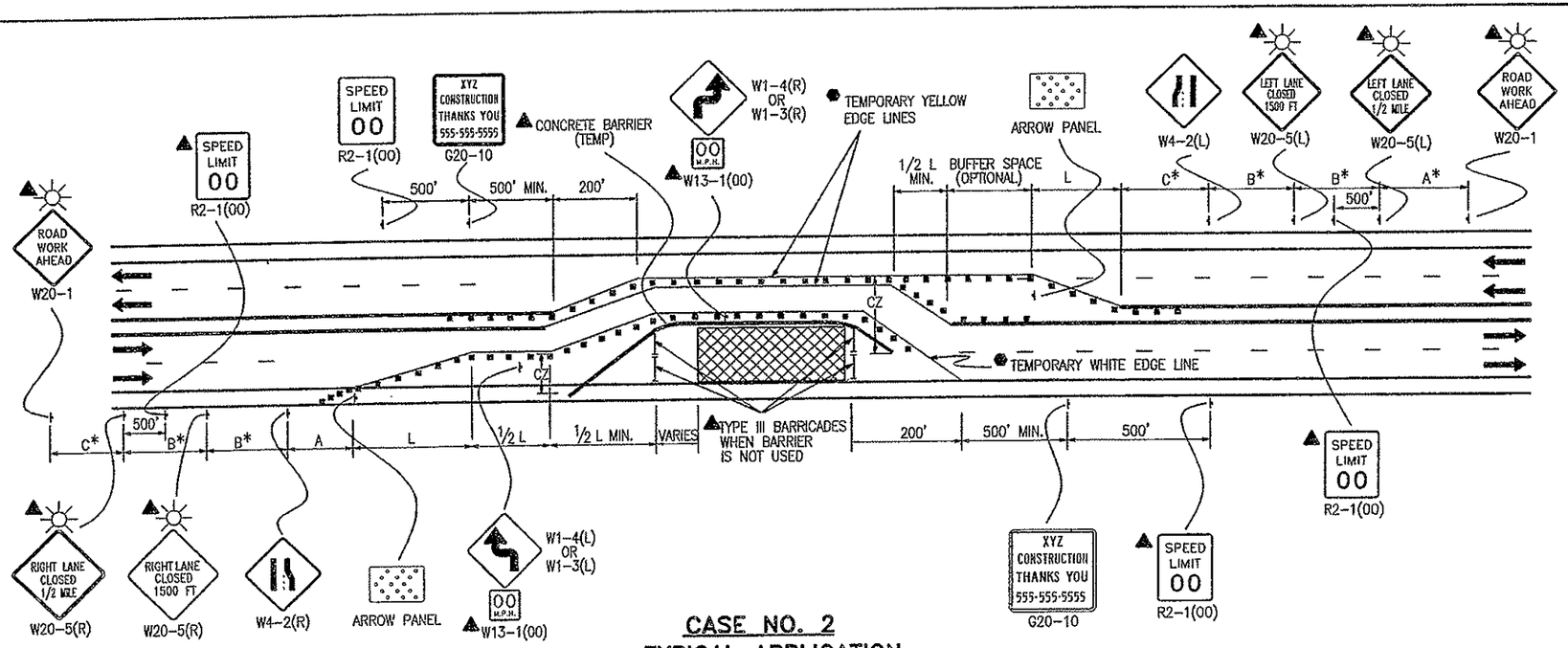

CASE NO. 2
TYPICAL APPLICATION
CLOSURE OF HALF OF 4-LANE HIGHWAY, NOT PHYSICALLY DIVIDED

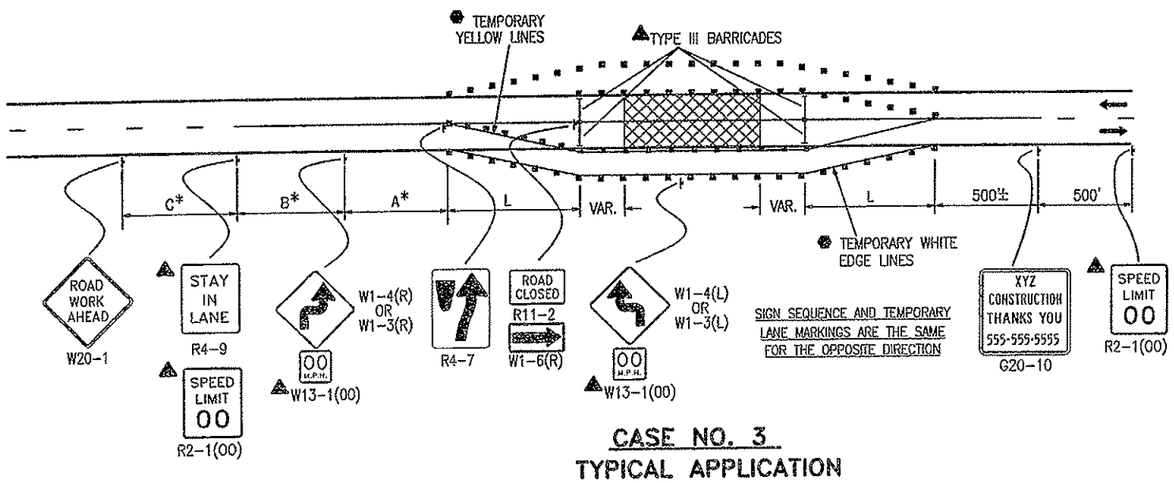

CASE NO. 3
TYPICAL APPLICATION
ROAD CLOSURE, USE OF ADJACENT SHOULDERS

LEGEND

- CHANNELIZING DEVICE: FOR TYPE OF DEVICE TO BE USED, SEE THE SCHEDULE OF CONSTRUCTION TRAFFIC CONTROL DEVICES INCLUDED IN THE PLANS.
- TYPE III BARRICADE
- CONCRETE BARRIER (TEMPORARY)
- FLAGGER
- DIRECTION OF TRAVEL
- WORK AREA

L TRANSITION TAPER LENGTH:

L = MINIMUM LENGTH OF TAPER

SPEED 45 MPH OR MORE: $L = S \times W$

SPEED 40 MPH OR LESS: $L = \frac{WS^2}{60}$

S = NUMERICAL VALUE OF SPEED LIMIT OR 85 PERCENTILE SPEED

W = WIDTH OF OFFSET

SHOULDER TAPER = 1/3 L

- ADVANCE WARNING FLASHING OR SEQUENCING ARROW PANEL

A = 100' (URBAN LOW SPEED)
350' (URBAN HIGH SPEED)
500' (RURAL)
1,000' (EXPRESSWAY / FREEWAY)

CZ CLEAR ZONE (SEE GENERAL NOTE 16).

▲ THESE DEVICES ARE OPTIONAL. THEIR NEED SHALL BE DETERMINED BY DETOUR DESIGN AND/OR SCOPE OF CONSTRUCTION ACTIVITY, AND ARE REQUIRED WHEN THEY ARE INCLUDED IN THE SCHEDULE OF CONSTRUCTION CONTROL DEVICES.

VARIES BUFFER SPACE (SEE GENERAL NOTE 21).

● REQUIRED WHEN WORK OCCUPIES THE LOCATION FOR MORE THAN 3 DAYS.

FLASHING BEACON

*KEY TO ADVANCE SIGNING DISTANCES

ROAD TYPE	DISTANCE BETWEEN SIGNS		
	A	B	C
URBAN (<=40 MPH)	100	100	100
URBAN (>=45 MPH)	350	350	350
RURAL	500	500	500
EXPRESSWAY/FREEWAY	1000	1500	2640

NO REVISIONS 9/30/09 JK

Computer File Information	
Creation Date: 07-04-06	Initials: KCM
Last Modification Date: 07-04-06	Initials: JSW
Full Path:www.dot.state.co.us/DesignSupport/	
Drawing File Name: S-630-1 (3 of 12)	
CAD Ver.: MicroStation V8 Scale: Not to Scale Units: English	

Sheet Revisions	
Date:	Comments

Colorado Department of Transportation
4201 East Arkansas Avenue
Denver, Colorado 80222
Phone: (303) 757-9543
Fax: (303) 757-9820
Staff Traffic Branch KCM/JSW

TRAFFIC CONTROLS FOR HIGHWAY CONSTRUCTION

Issued By: Traffic Engineering Unit July 4, 2006

STANDARD PLAN NO.

S-630-1

Sheet No. 3 of 12

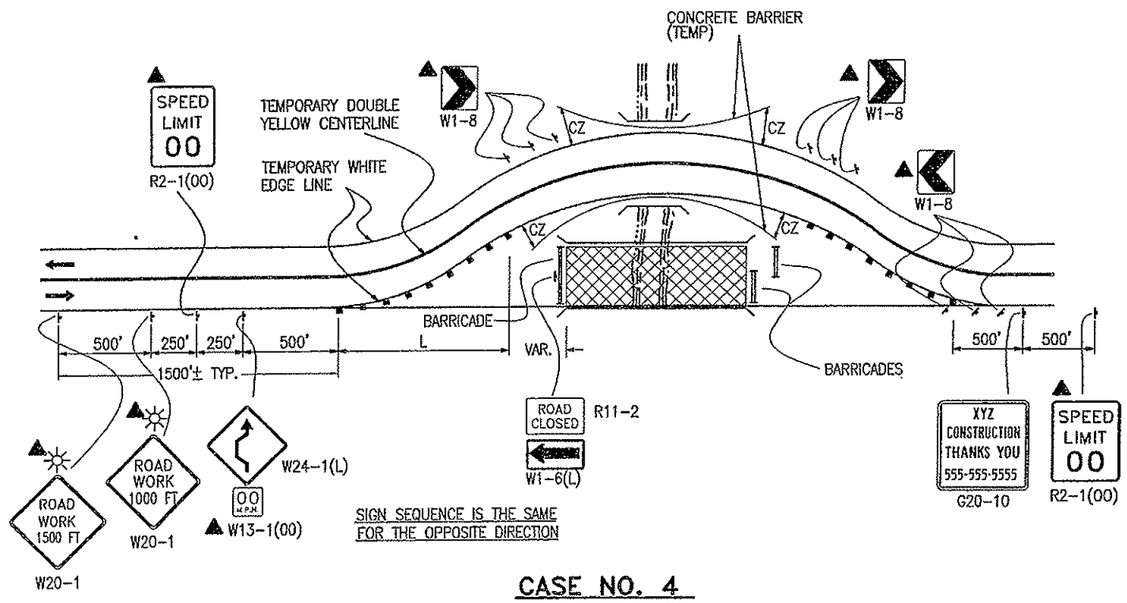

CASE NO. 4
TYPICAL APPLICATION
ROAD CLOSURE, BYPASS DETOUR PROVIDED

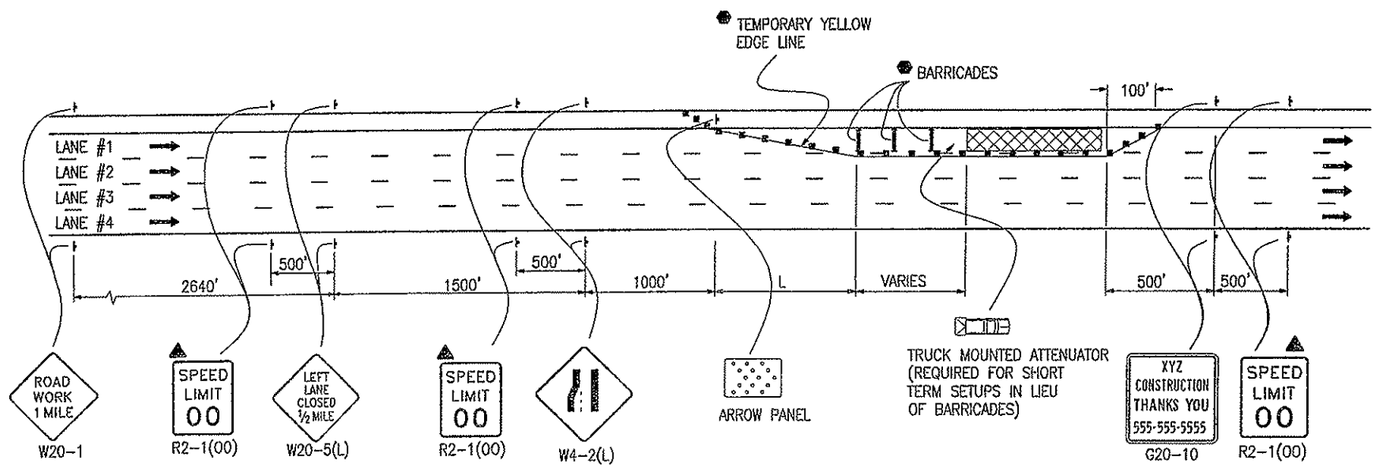

CASE NO. 5
TYPICAL APPLICATION
LANE #1 CLOSURE, MULTILANE FREEWAY

LEGEND

- CHANNELIZING DEVICE: FOR TYPE OF DEVICE TO BE USED, SEE THE SCHEDULE OF CONSTRUCTION TRAFFIC CONTROL DEVICES INCLUDED IN THE PLANS.
- TYPE III BARRICADE
- CONCRETE BARRIER (TEMPORARY)
- FLAGGER
- DIRECTION OF TRAVEL
- WORK AREA
- L — TRANSITION TAPER LENGTH:
  - L = MINIMUM LENGTH OF TAPER
  - SPEED 45 MPH OR MORE: $L = S \times W$
  - SPEED 40 MPH OR LESS: $L = \frac{WS^2}{60}$
  - S = NUMERICAL VALUE OF SPEED LIMIT OR 85 PERCENTILE SPEED
  - W = WIDTH OF OFFSET
  - SHOULDER TAPER = 1/3 L
- ADVANCE WARNING FLASHING OR SEQUENCING ARROW PANEL
- CZ — CLEAR ZONE (SEE GENERAL NOTE 16).
- ▲ THESE DEVICES ARE OPTIONAL. THEIR NEED SHALL BE DETERMINED BY DETOUR DESIGN AND/OR SCOPE OF CONSTRUCTION ACTIVITY, AND ARE REQUIRED WHEN THEY ARE INCLUDED IN THE SCHEDULE OF CONSTRUCTION CONTROL DEVICES.
- VARIES — BUFFER SPACE (SEE GENERAL NOTE 21).
- ● REQUIRED WHEN WORK OCCUPIES THE LOCATION FOR MORE THAN 3 DAYS.
- TRUCK MOUNTED ATTENUATOR
- FLASHING BEACON

NO REVISIONS 9/30/09 HK

Computer File Information		Sheet Revisions	
Creation Date: 07-04-06	Initials: KCM	Date:	Comments
Last Modification Date: 07-04-06	Initials: JSW		
Full Path:www.dot.state.co.us/DesignSupport/			
Drawing File Name: S-630-1 (4 of 12)			
CAD Ver.: MicroStation V8 Scale: Not to Scale Units: English			

Colorado Department of Transportation
4201 East Arkansas Avenue
Denver, Colorado 80222
Phone: (303) 757-9543
Fax: (303) 757-9820
Staff Traffic Branch KCM/JSW

TRAFFIC CONTROLS FOR HIGHWAY CONSTRUCTION

Issued By: Traffic Engineering Unit July 4, 2006

STANDARD PLAN NO.
S-630-1
Sheet No. 4 of 12

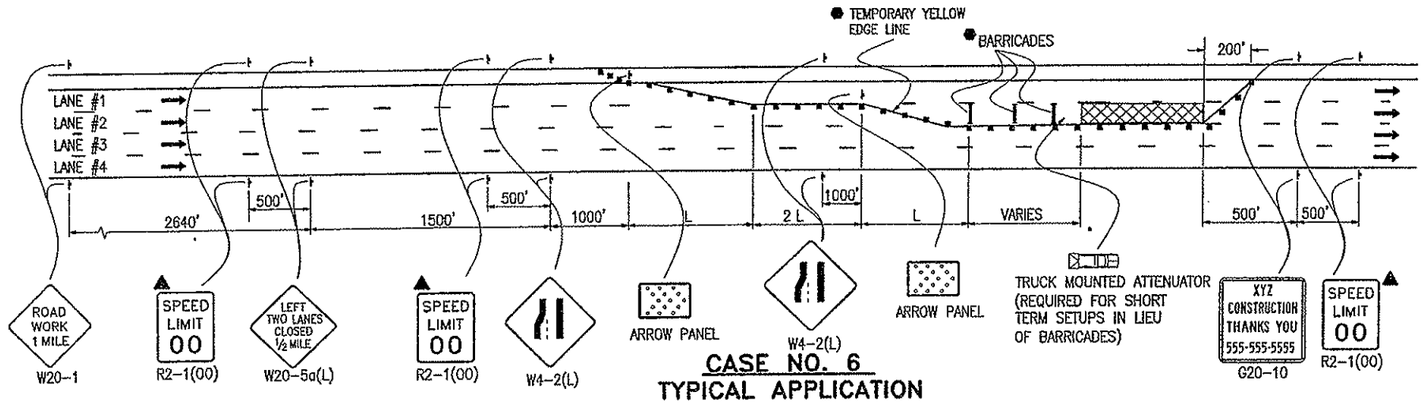

CASE NO. 6
TYPICAL APPLICATION

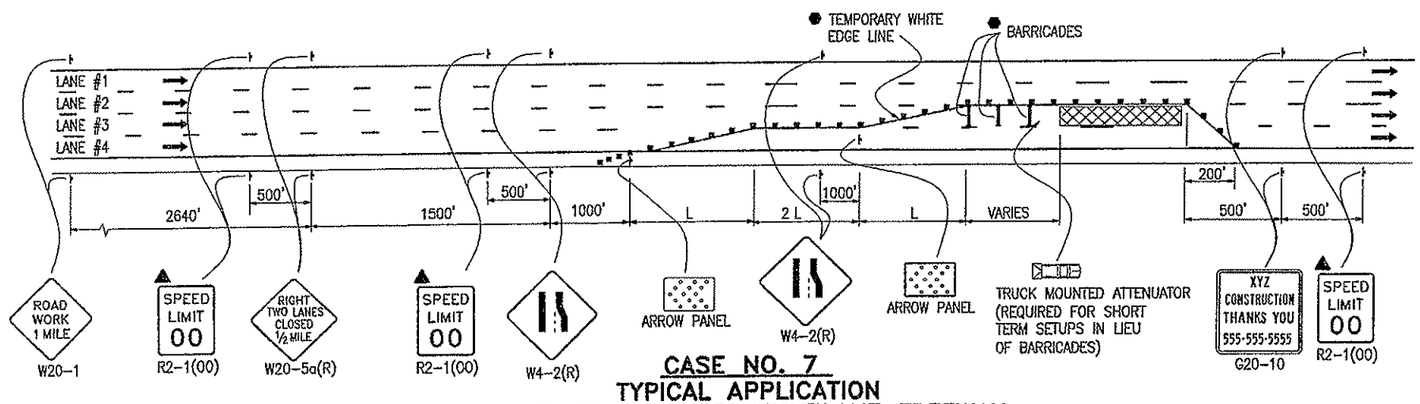

CASE NO. 7
TYPICAL APPLICATION
LANE #3 CLOSURE, MULTILANE FREEWAY

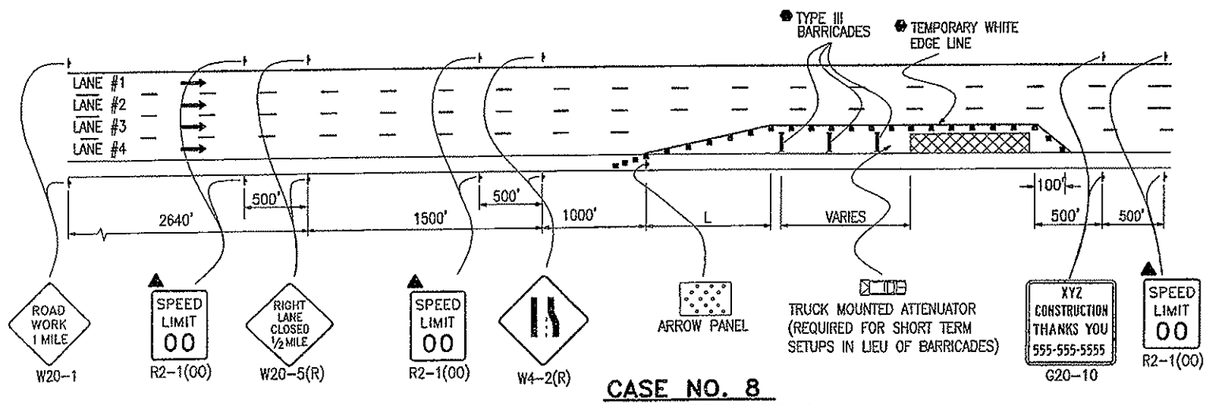

CASE NO. 8
TYPICAL APPLICATION
LANE #4 CLOSURE, MULTILANE FREEWAY

LEGEND

- CHANNELIZING DEVICE: FOR TYPE OF DEVICE TO BE USED, SEE THE SCHEDULE OF CONSTRUCTION TRAFFIC CONTROL DEVICES INCLUDED IN THE PLANS.
- TYPE III BARRICADE
- CONCRETE BARRIER (TEMPORARY)
- FLAGGER
- DIRECTION OF TRAVEL
- WORK AREA
- L — TRANSITION TAPER LENGTH:
  - L = MINIMUM LENGTH OF TAPER
  - SPEED 45 MPH OR MORE: $L = S \times W$
  - SPEED 40 MPH OR LESS: $L = \frac{WS^2}{60}$
  - S = NUMERICAL VALUE OF SPEED LIMIT OR 85 PERCENTILE SPEED
  - W = WIDTH OF OFFSET
  - SHOULDER TAPER = 1/3 L
- ADVANCE WARNING FLASHING OR SEQUENCING ARROW PANEL
- CZ — CLEAR ZONE (SEE GENERAL NOTE 16).
- ▲ — THESE DEVICES ARE OPTIONAL. THEIR NEED SHALL BE DETERMINED BY DETOUR DESIGN AND/OR SCOPE OF CONSTRUCTION ACTIVITY, AND ARE REQUIRED WHEN THEY ARE INCLUDED IN THE SCHEDULE OF CONSTRUCTION CONTROL DEVICES.
- VARIES — BUFFER SPACE (SEE GENERAL NOTE 21).
- ● — REQUIRED WHEN WORK OCCUPIES THE LOCATION FOR MORE THAN 3 DAYS.
- TRUCK MOUNTED ATTENUATOR

NO REVISIONS 9/30/09 YK

Computer File Information		Sheet Revisions	
Creation Date: 07-04-06 Initials: KCM		Date:	Comments
Last Modification Date: 07-04-06 Initials: JSW			
Full Path:www.dot.state.co.us/DesignSupport/			
Drawing File Name: S-630-1 (5 of 12)			
CAD Ver.: MicroStation V8 Scale: Not to Scale Units: English			

Colorado Department of Transportation
4201 East Arkansas Avenue
Denver, Colorado 80222
Phone: (303) 757-9543
Fax: (303) 757-9820
Staff Traffic Branch KCM/JSW

TRAFFIC CONTROLS FOR HIGHWAY CONSTRUCTION

Issued By: Traffic Engineering Unit July 4, 2006

STANDARD PLAN NO.
S-630-1
Sheet No. 5 of 12

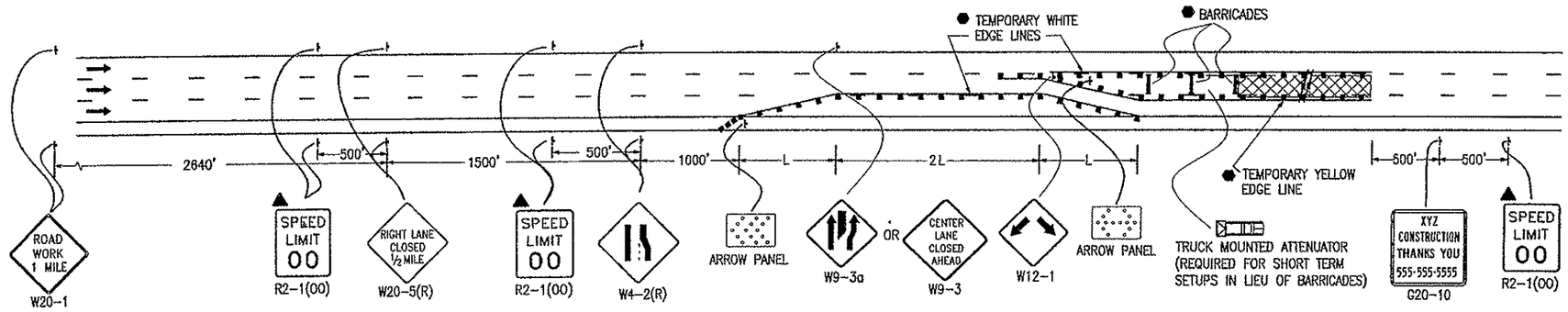

CASE NO. 9
TYPICAL APPLICATION
CENTER LANE CLOSURE – MULTILANE FREEWAY

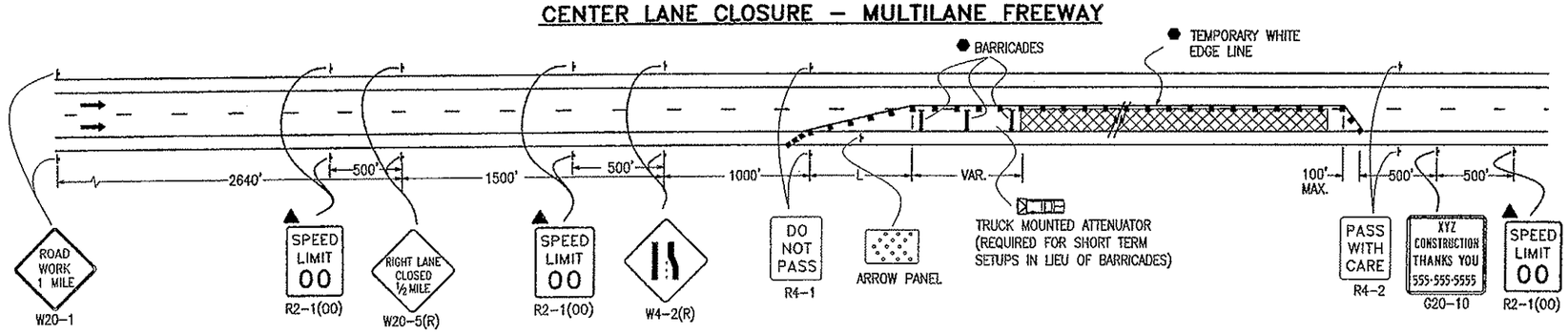

CASE NO. 10
TYPICAL APPLICATION
ONE LANE CLOSED – FOUR-LANE DIVIDED HIGHWAY

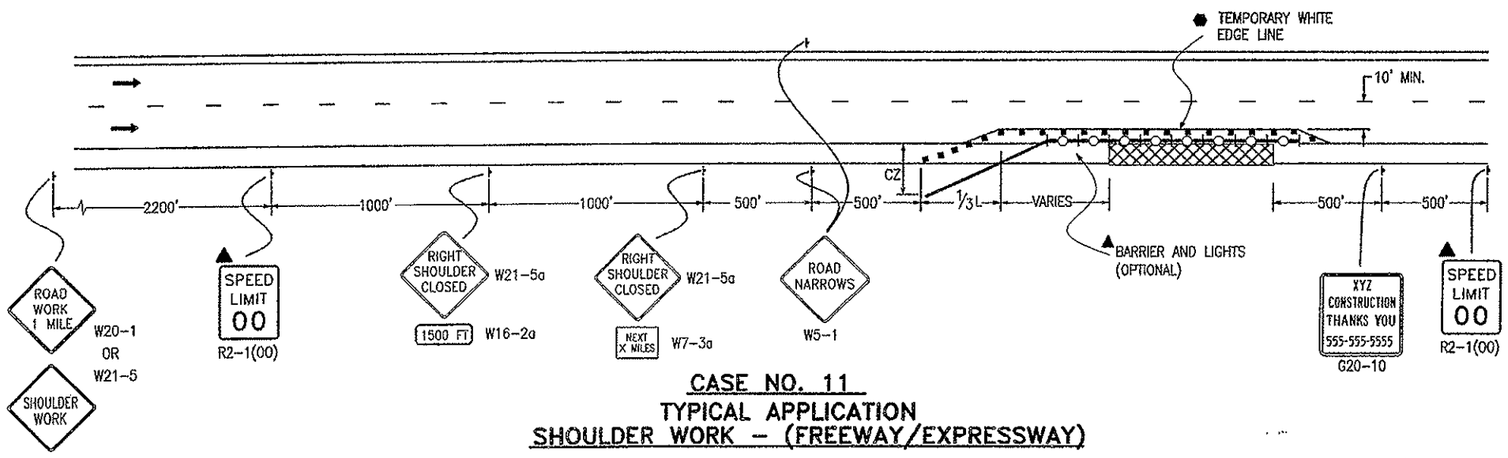

CASE NO. 11
TYPICAL APPLICATION
SHOULDER WORK – (FREEWAY/EXPRESSWAY)

LEGEND

- CHANNELIZING DEVICE: FOR TYPE OF DEVICE TO BE USED, SEE THE SCHEDULE OF CONSTRUCTION TRAFFIC CONTROL DEVICES INCLUDED IN THE PLANS.
- TYPE III BARRICADE
- CONCRETE BARRIER (TEMPORARY)
- FLAGGER
- DIRECTION OF TRAVEL
- WORK AREA
- L — TRANSITION TAPER LENGTH:
  - L = MINIMUM LENGTH OF TAPER
  - SPEED 45 MPH OR MORE: $L = S \times W$
  - SPEED 40 MPH OR LESS: $L = \frac{WS^2}{60}$
  - S = NUMERICAL VALUE OF SPEED LIMIT OR 85 PERCENTILE SPEED
  - W = WIDTH OF OFFSET
  - SHOULDER TAPER = 1/3 L
- ADVANCE WARNING FLASHING OR SEQUENCING ARROW PANEL
- CZ — CLEAR ZONE (SEE GENERAL NOTE 16).
- ▲ THESE DEVICES ARE OPTIONAL. THEIR NEED SHALL BE DETERMINED BY DETOUR DESIGN AND/OR SCOPE OF CONSTRUCTION ACTIVITY, AND ARE REQUIRED WHEN THEY ARE INCLUDED IN THE SCHEDULE OF CONSTRUCTION CONTROL DEVICES.
- VARIES — BUFFER SPACE (SEE GENERAL NOTE 21).
- ● REQUIRED WHEN WORK OCCUPIES THE LOCATION FOR MORE THAN 3 DAYS.
- TRUCK MOUNTED ATTENUATOR
- CONCRETE BARRIER (TEMPORARY) WITH LIGHTS

NO REVISIONS 9/30/09 JK

Computer File Information		Sheet Revisions		Colorado Department of Transportation	TRAFFIC CONTROLS FOR HIGHWAY CONSTRUCTION	STANDARD PLAN NO.
Creation Date: 07-04-06 Initials: KCM		Date:	Comments	4201 East Arkansas Avenue Denver, Colorado 80222 Phone: (303) 757-9543 Fax: (303) 757-9820		S-630-1
Last Modification Date: 07-04-06 Initials: JSW						
Full Path:www.dot.state.co.us/DesignSupport/						
Drawing File Name: S-630-1 (6 of 12)				Staff Traffic Branch KCM/JSW	Issued By: Traffic Engineering Unit July 4, 2006	Sheet No. 6 of 12
CAD Ver.: MicroStation V8 Scale: Not to Scale Units: English						

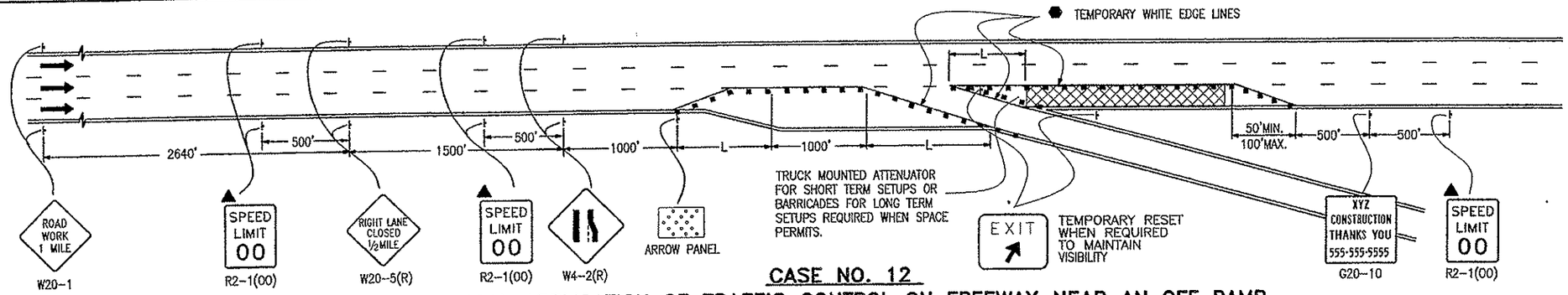

CASE NO. 12

TYPICAL APPLICATION OF TRAFFIC CONTROL ON FREEWAY NEAR AN OFF RAMP

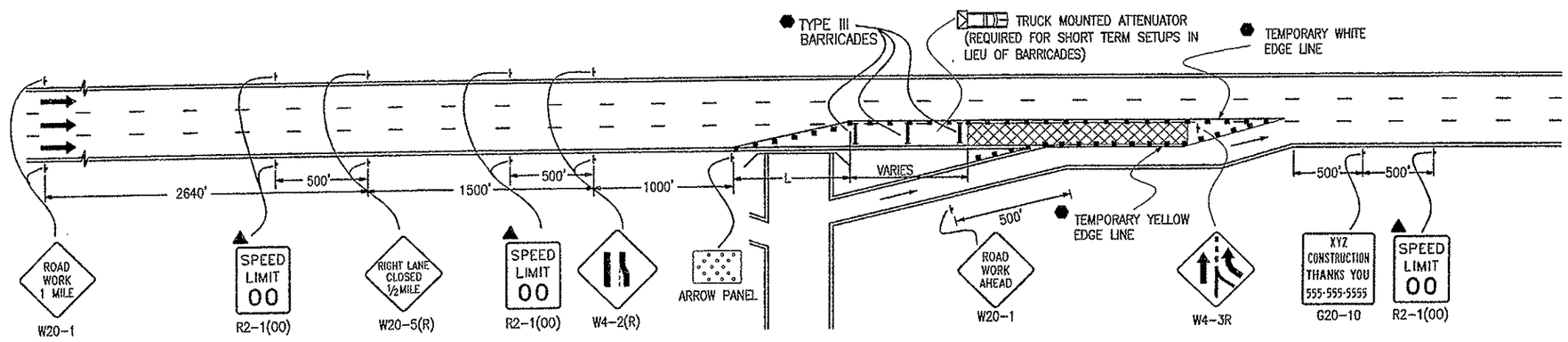

CASE NO. 13

TYPICAL APPLICATION OF TRAFFIC CONTROL ON FREEWAY BEFORE AN ON RAMP

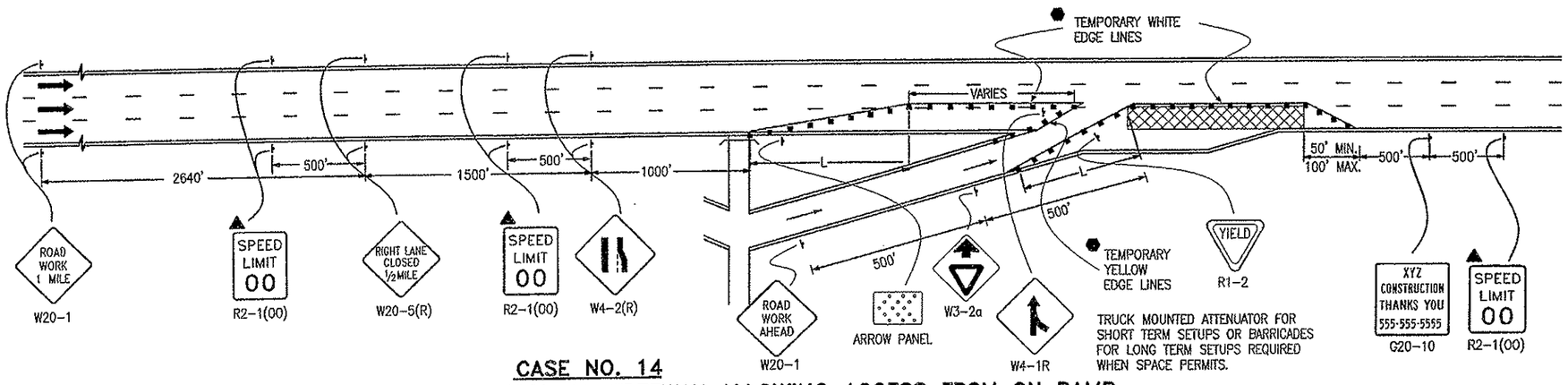

CASE NO. 14

TYPICAL APPLICATION OF TRAFFIC CONTROL ON FREEWAY ALLOWING ACCESS FROM ON RAMP

LEGEND

- CHANNELIZING DEVICE: FOR TYPE OF DEVICE TO BE USED, SEE THE SCHEDULE OF CONSTRUCTION TRAFFIC CONTROL DEVICES INCLUDED IN THE PLANS.
- TYPE III BARRICADE
- CONCRETE BARRIER (TEMPORARY)
- FLAGGER
- DIRECTION OF TRAVEL
- WORK AREA
- L — TRANSITION TAPER LENGTH:
  - L = MINIMUM LENGTH OF TAPER
  - SPEED 45 MPH OR MORE: $L = S \times W$
  - SPEED 40 MPH OR LESS: $L = \frac{WS^2}{60}$
  - S = NUMERICAL VALUE OF SPEED LIMIT OR 85 PERCENTILE SPEED
  - W = WIDTH OF OFFSET
  - SHOULDER TAPER = 1/3 L
- ADVANCE WARNING FLASHING OR SEQUENCING ARROW PANEL
- CZ — CLEAR ZONE (SEE GENERAL NOTE 16).
- ▲ THESE DEVICES ARE OPTIONAL. THEIR NEED SHALL BE DETERMINED BY DETOUR DESIGN AND/OR SCOPE OF CONSTRUCTION ACTIVITY, AND ARE REQUIRED WHEN THEY ARE INCLUDED IN THE SCHEDULE OF CONSTRUCTION CONTROL DEVICES.
- VARIES — BUFFER SPACE (SEE GENERAL NOTE 21).
- ● REQUIRED WHEN WORK OCCUPIES THE LOCATION FOR MORE THAN 3 DAYS.
- TRUCK MOUNTED ATTENUATOR

NC REVISED 9/30/09

Computer File Information		Sheet Revisions	
Creation Date: 07-04-06	Initials: KCM	Date:	Comments
Last Modification Date: 07-04-06	Initials: JSW		
Full Path:www.dot.state.co.us/DesignSupport/			
Drawing File Name: S-630-1 (7 of 12)			
CAD Ver.: MicroStation V8 Scale: Not to Scale Units: English			

Colorado Department of Transportation
4201 East Arkansas Avenue
Denver, Colorado 80222
Phone: (303) 757-9543
Fax: (303) 757-9820
Staff Traffic Branch KCM/JSW

TRAFFIC CONTROLS FOR HIGHWAY CONSTRUCTION

Issued By: Traffic Engineering Unit July 4, 2006

STANDARD PLAN NO.

S-630-1

Sheet No. 7 of 12

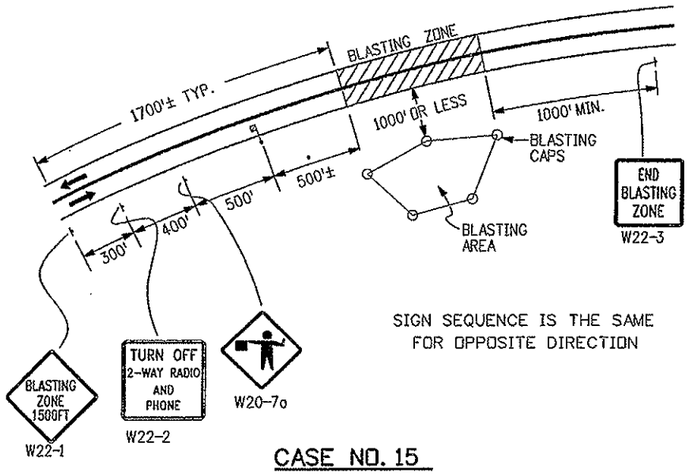

CASE NO. 15

TYPICAL APPLICATION – FOR BLASTING

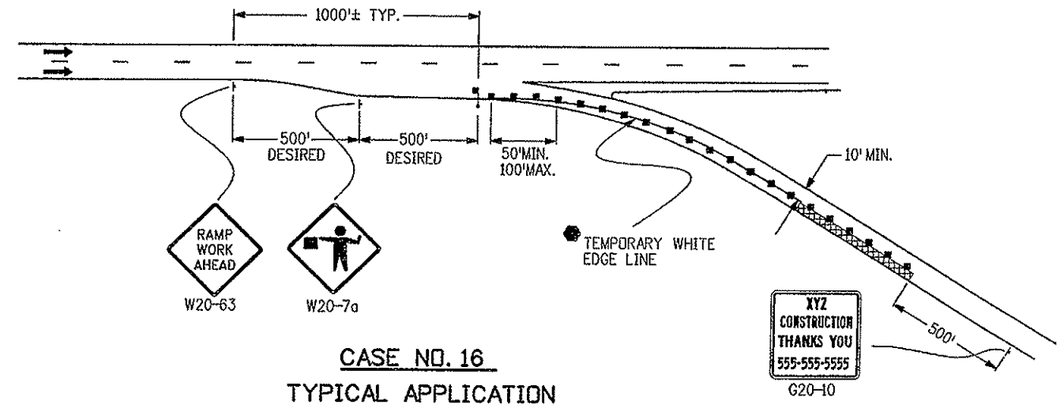

CASE NO. 16

TYPICAL APPLICATION

RAMP CONSTRUCTION WHERE PARTIAL RAMP IS CLOSED

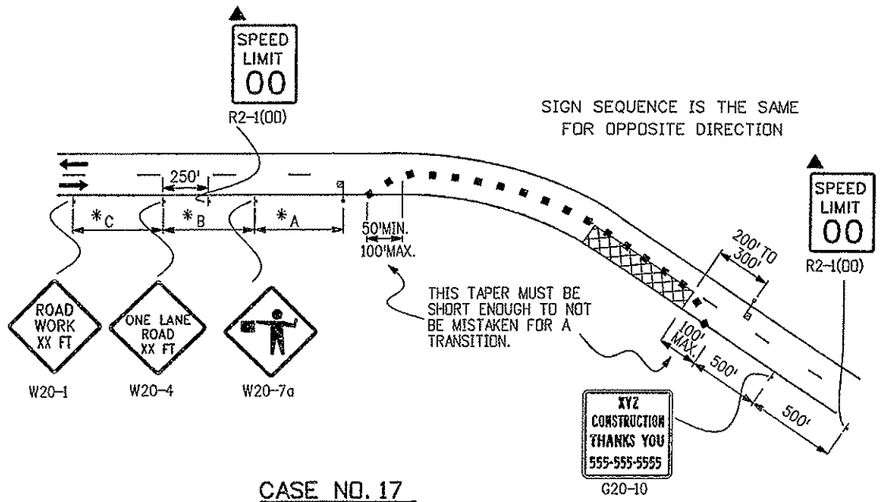

CASE NO. 17

TYPICAL APPLICATION

LANE CLOSURE, 2-LANE HIGHWAY, AT CURVE

LEGEND

- CHANNELIZING DEVICE: FOR TYPE OF DEVICE TO BE USED, SEE THE SCHEDULE OF CONSTRUCTION TRAFFIC CONTROL DEVICES INCLUDED IN THE PLANS.
- TYPE III BARRICADE
- CONCRETE BARRIER (TEMPORARY)
- FLAGGER
- DIRECTION OF TRAVEL
- WORK AREA
- L TRANSITION TAPER LENGTH:
  - L = MINIMUM LENGTH OF TAPER
  - SPEED 45 MPH OR MORE: $L = S \times W$
  - SPEED 40 MPH OR LESS: $L = \frac{WS^2}{60}$
  - S = NUMERICAL VALUE OF SPEED LIMIT OR 85 PERCENTILE SPEED
  - W = WIDTH OF OFFSET
  - SHOULDER TAPER = 1/3 L
- ADVANCE WARNING FLASHING OR SEQUENCING ARROW PANEL
- CZ CLEAR ZONE (SEE GENERAL NOTE 16).
- ▲ THESE DEVICES ARE OPTIONAL. THEIR NEED SHALL BE DETERMINED BY DETOUR DESIGN AND/OR SCOPE OF CONSTRUCTION ACTIVITY, AND ARE REQUIRED WHEN THEY ARE INCLUDED IN THE SCHEDULE OF CONSTRUCTION CONTROL DEVICES.
- VARIES BUFFER SPACE (SEE GENERAL NOTE 21).
- REQUIRED WHEN WORK OCCUPIES THE LOCATION FOR MORE THAN 3 DAYS.

*KEY TO ADVANCE SIGNING DISTANCES

ROAD TYPE	DISTANCE BETWEEN SIGNS		
	A	B	C
URBAN (<=40 MPH)	100	100	100
URBAN (>=45 MPH)	350	350	350
RURAL	500	500	500
EXPRESSWAY/FREEWAY	1000	1500	2640

No REVISIONS 9/30/09 BK

Computer File Information	
Creation Date: 07/04/06	Initials: KCM
Last Modification Date: 03/05/07	Initials: KEN
Full Path: www.dot.state.co.us/DesignSupport/	
Drawing File Name: Sheet_S-630-01_8of12.dgn	
CAD Ver.: MicroStation V8 Scale: Not to Scale	Units: English

	Sheet Revisions	
	Date:	Comments
R-1	03/05/07	W20-1 & W20-4 SIGNS REVISED
R-X		
R-X		
R-X		

Colorado Department of Transportation
4201 East Arkansas Avenue
Denver, Colorado 80222
Phone: (303) 757-9543
Fax: (303) 757-9458
Staff Traffic Branch KCM/KEN

TRAFFIC CONTROLS FOR HIGHWAY CONSTRUCTION

Issued By: Traffic Engineering Unit July 4, 2006

STANDARD PLAN NO.

S-630-1

Sheet No. 8 of 12

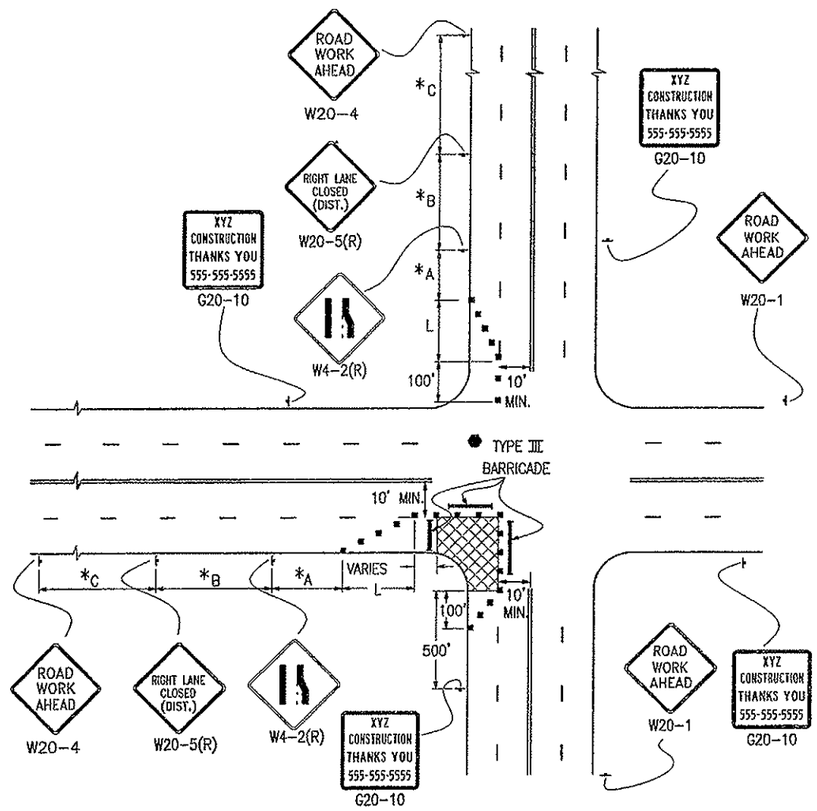

CASE NO. 18
TYPICAL APPLICATION OF TRAFFIC CONTROL AROUND A WORK AREA NEAR AN INTERSECTION, ONE LANE CLOSED

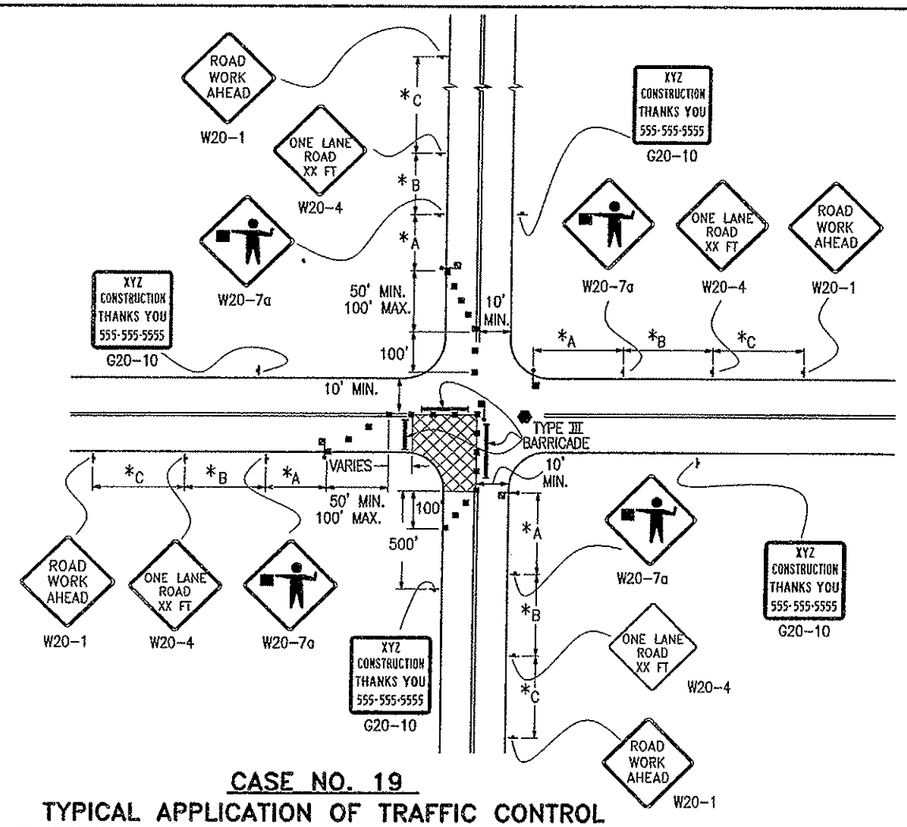

CASE NO. 19
TYPICAL APPLICATION OF TRAFFIC CONTROL AROUND A WORK AREA NEAR AN INTERSECTION

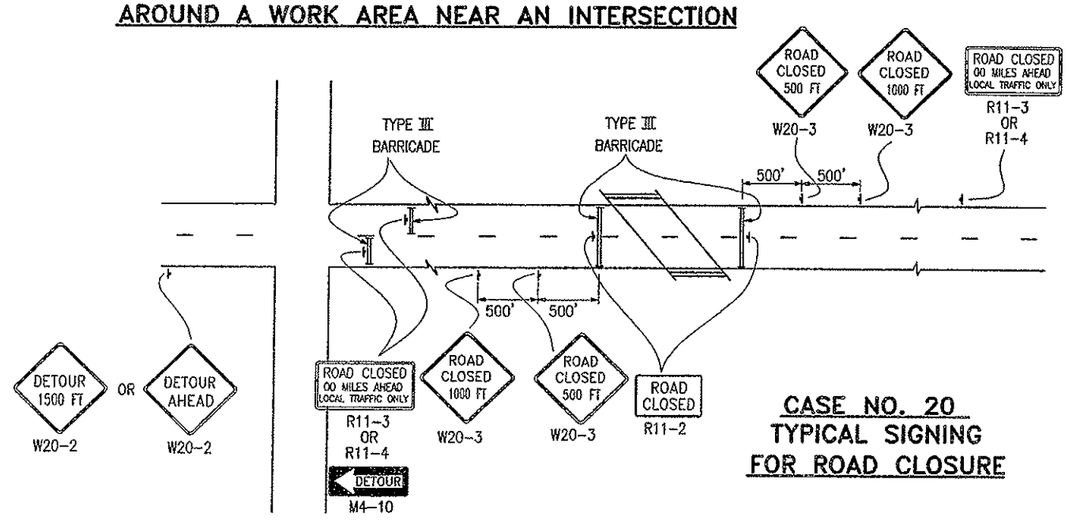

CASE NO. 20
TYPICAL SIGNING FOR ROAD CLOSURE

LEGEND

- CHANNELIZING DEVICE: FOR TYPE OF DEVICE TO BE USED, SEE THE SCHEDULE OF CONSTRUCTION TRAFFIC CONTROL DEVICES INCLUDED IN THE PLANS.
- TYPE III BARRICADE
- CONCRETE BARRIER (TEMPORARY)
- FLAGGER
- DIRECTION OF TRAVEL
- WORK AREA
- L — TRANSITION TAPER LENGTH:
  - L = MINIMUM LENGTH OF TAPER
  - SPEED 45 MPH OR MORE: L = S x W
  - SPEED 40 MPH OR LESS: $L = \frac{WS^2}{60}$
  - S = NUMERICAL VALUE OF SPEED LIMIT OR 85 PERCENTILE SPEED
  - W = WIDTH OF OFFSET
  - SHOULDER TAPER = 1/3 L
- ADVANCE WARNING FLASHING OR SEQUENCING ARROW PANEL
- CZ — CLEAR ZONE (SEE GENERAL NOTE 16).
- ▲ THESE DEVICES ARE OPTIONAL. THEIR NEED SHALL BE DETERMINED BY DETOUR DESIGN AND/OR SCOPE OF CONSTRUCTION ACTIVITY, AND ARE REQUIRED WHEN THEY ARE INCLUDED IN THE SCHEDULE OF CONSTRUCTION CONTROL DEVICES.
- VARIES — BUFFER SPACE (SEE GENERAL NOTE 21).
- ● REQUIRED WHEN WORK OCCUPIES THE LOCATION FOR MORE THAN 3 DAYS.

*KEY TO ADVANCE SIGNING DISTANCES

ROAD TYPE	DISTANCE BETWEEN SIGNS		
	A	B	C
URBAN (<=40 MPH)	100	100	100
URBAN (>=45 MPH)	350	350	350
RURAL	500	500	500
EXPRESSWAY/FREEWAY	1000	1500	2640

NOTE:

SIGN PLACEMENT SHOWN ON CASES 18 AND 19 TYPIFIES RURAL APPLICATIONS. URBAN APPLICATIONS REQUIRE THE SIGNS TO BE PLACED WITHIN ONE, OR PERHAPS TWO, BLOCKS.

No revisions. 9/30/09

Computer File Information	
Creation Date: 07-04-06	Initials: KCM
Last Modification Date: 07-04-06	Initials: JSW
Full Path:www.dot.state.co.us/DesignSupport/	
Drawing File Name: S-630-1 (9 of 12)	
CAD Ver.: MicroStation V8 Scale: Not to Scale Units: English	

Sheet Revisions	
Date:	Comments

Colorado Department of Transportation
4201 East Arkansas Avenue
Denver, Colorado 80222
Phone: (303) 757-9543
Fax: (303) 757-9820
Staff Traffic Branch
KCM/JSW

TRAFFIC CONTROLS FOR HIGHWAY CONSTRUCTION

Issued By: Traffic Engineering Unit July 4, 2006

STANDARD PLAN NO.

S-630-1

Sheet No. 9 of 12

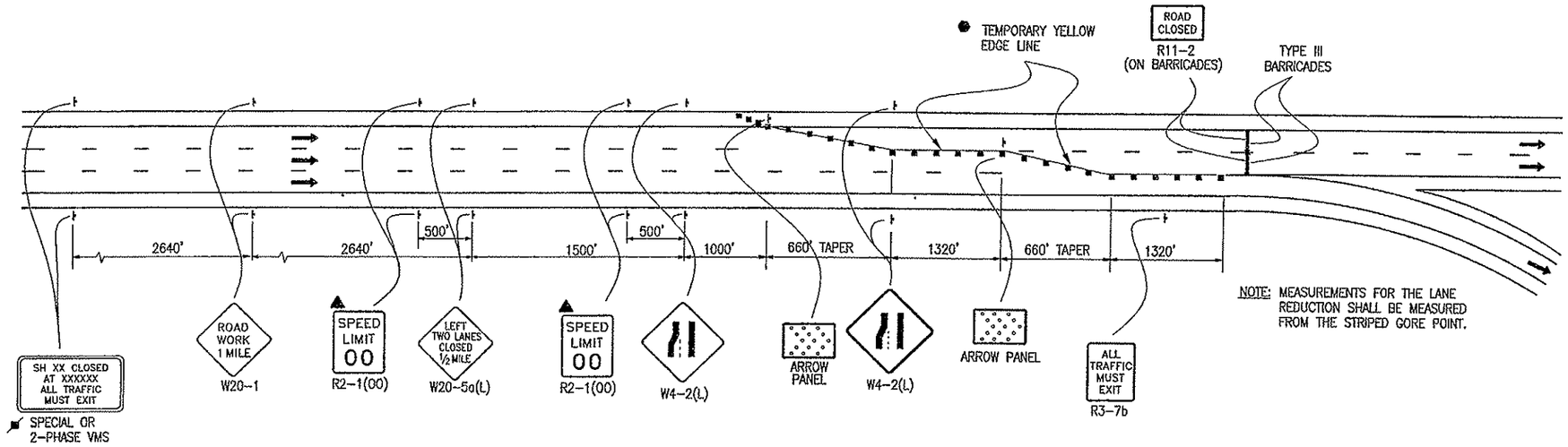

NOTE: MEASUREMENTS FOR THE LANE REDUCTION SHALL BE MEASURED FROM THE STRIPED GORE POINT.

CASE NO. 21
TYPICAL APPLICATION
FULL CLOSURE, MULTILANE FREEWAY

LEGEND

- ADVANCE WARNING FLASHING OR SEQUENCING ARROW PANEL
- ▲ THESE DEVICES ARE OPTIONAL. THEIR NEED WILL BE DETERMINED BY THE DESIGNER BASED ON DETOUR DESIGN AND/OR SCOPE OF THE CONSTRUCTION ACTIVITY, AND ARE REQUIRED WHEN THEY ARE INCLUDED IN THE PLANS.
- ● REQUIRED WHEN WORK OCCUPIES THE LOCATION FOR MORE THAN 3 DAYS.
- ▪ CHANNELIZING DEVICE: FOR TYPE OF DEVICE TO BE USED, SEE THE SCHEDULE OF CONSTRUCTION TRAFFIC CONTROL DEVICES INCLUDED IN THE PLANS.
- TYPE III BARRICADE
- DIRECTION OF TRAVEL
- L TRANSITION TAPER LENGTH:
  - L = MINIMUM LENGTH OF TAPER
  - SPEED 45 MPH OR MORE: $L = S \times W$
  - SPEED 40 MPH OR LESS: $L = \frac{WS^2}{60}$
  - S = NUMERICAL VALUE OF SPEED LIMIT OR 85 PERCENTILE SPEED
  - W = WIDTH OF OFFSET
  - SHOULDER TAPER = 1/3 L
- CLOSURE AND EXIT MESSAGES ON SIGN LEGEND(S) SHOULD BE MODIFIED TO FIT THE SITUATION.

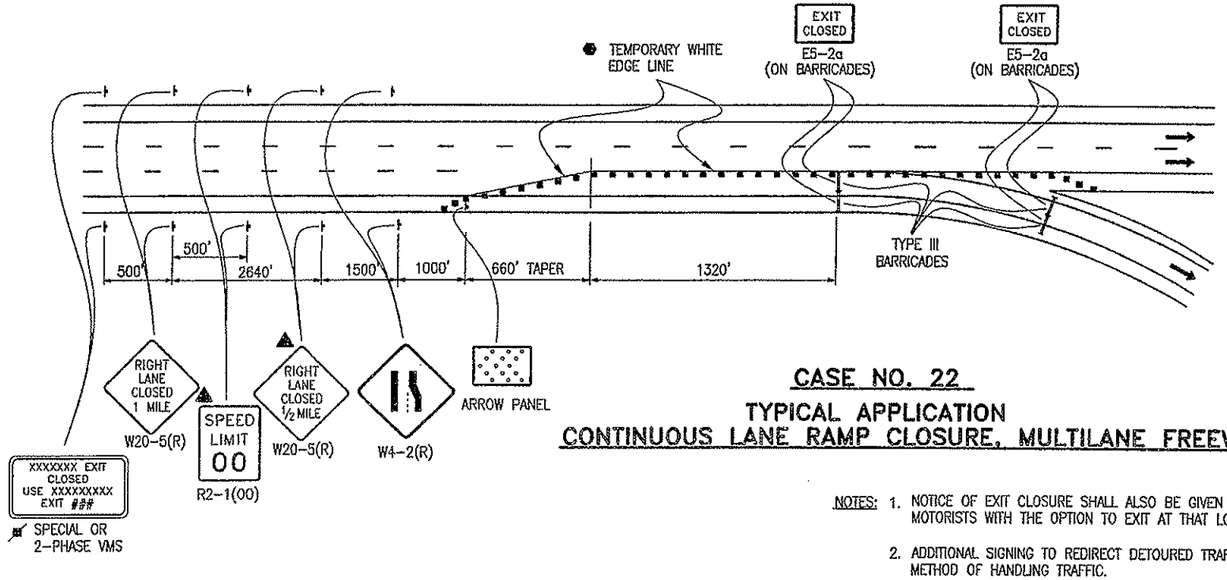

CASE NO. 22
TYPICAL APPLICATION
CONTINUOUS LANE RAMP CLOSURE, MULTILANE FREEWAY

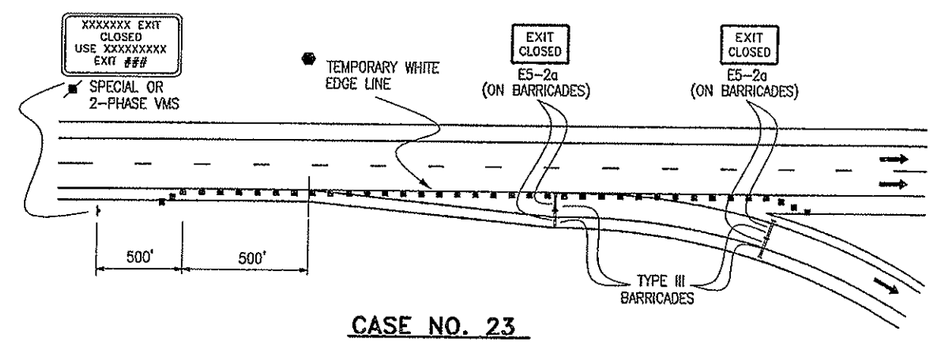

CASE NO. 23
TYPICAL APPLICATION
SIMPLE RAMP CLOSURE, MULTILANE FREEWAY

NOTES:
1. NOTICE OF EXIT CLOSURE SHALL ALSO BE GIVEN IN ADVANCE OF THE PREVIOUS EXIT TO PROVIDE MOTORISTS WITH THE OPTION TO EXIT AT THAT LOCATION.
2. ADDITIONAL SIGNING TO REDIRECT DETOURED TRAFFIC SHALL BE PROVIDED FOR IN THE PROJECT'S METHOD OF HANDLING TRAFFIC.
3. FOR LONG TERM SETUPS, A BLACK ON ORANGE "EXIT CLOSED" (E5-2a) PANEL SHALL BE MOUNTED DIAGONALLY ACROSS ALL EXISTING GUIDE SIGNS THAT PERTAIN TO THE CLOSED EXIT.

NO REVISIONS 9/30/09

Computer File Information		Sheet Revisions	
Creation Date: 07-04-06	Initials: KCM	Date:	Comments
Last Modification Date: 07-04-06	Initials: JSW		
Full Path:www.dot.state.co.us/DesignSupport/			
Drawing File Name: S-630-1 (10 of 12)			
CAD Ver.: MicroStation V8 Scale: Not to Scale Units: English			

Colorado Department of Transportation
4201 East Arkansas Avenue
Denver, Colorado 80222
Phone: (303) 757-9543
Fax: (303) 757-9820
Staff Traffic Branch
KCM/JSW

TRAFFIC CONTROLS FOR HIGHWAY CONSTRUCTION

Issued By: Traffic Engineering Unit July 4, 2006

STANDARD PLAN NO.
S-630-1
Sheet No. 10 of 12

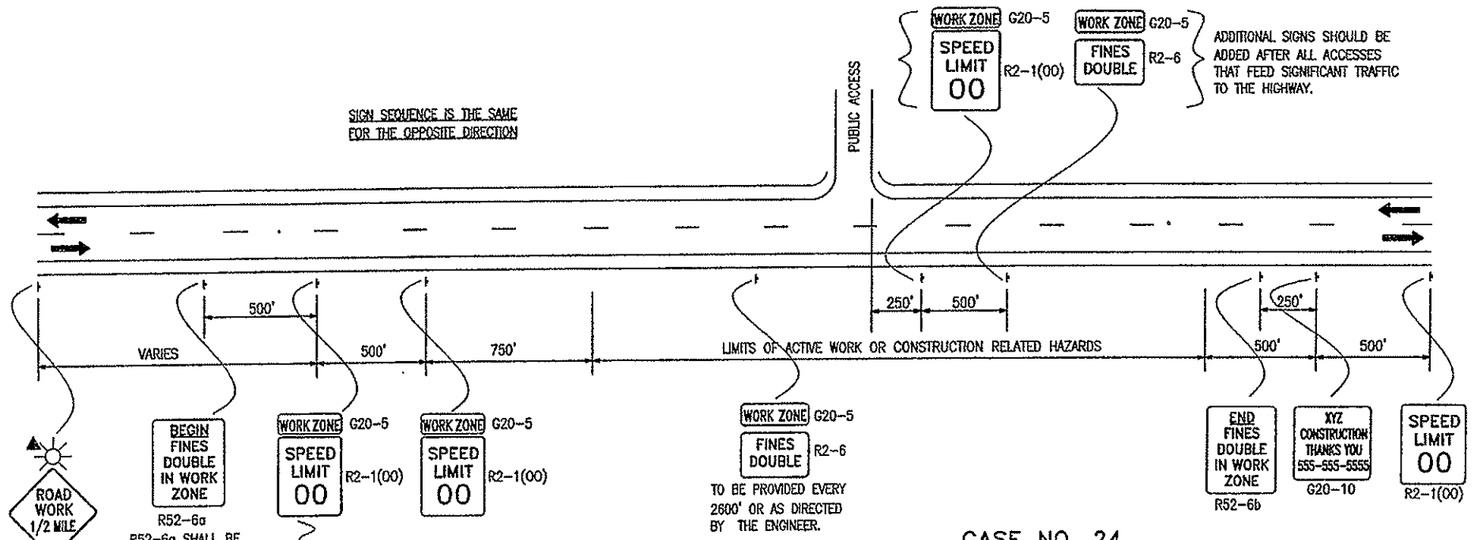

CASE NO. 24
TYPICAL APPLICATION
"FINES DOUBLE IN WORK ZONE" SIGNING
(WITH SPEED REDUCTION)

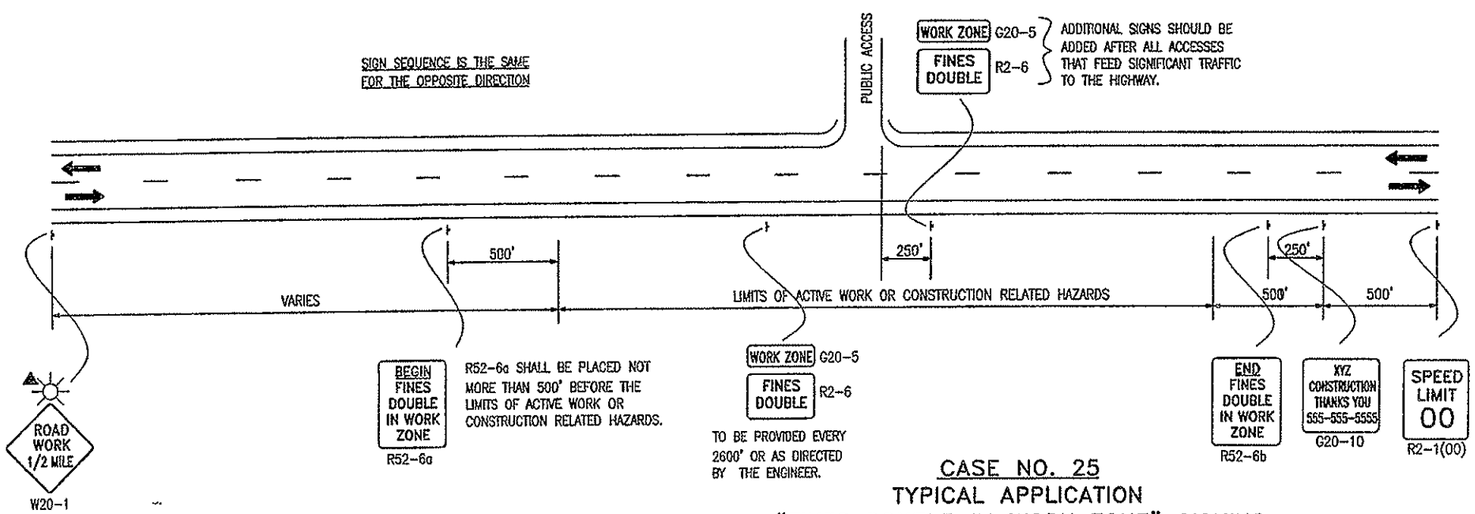

CASE NO. 25
TYPICAL APPLICATION
"FINES DOUBLE IN WORK ZONE" SIGNING
(WITHOUT SPEED REDUCTION)

LEGEND

← DIRECTION OF TRAVEL

▲ THESE DEVICES ARE OPTIONAL. THEIR NEED WILL BE DETERMINED BY THE DESIGNER BASED ON DETOUR DESIGN AND/OR SCOPE OF CONSTRUCTION ACTIVITY, AND ARE REQUIRED WHEN THEY ARE INCLUDED IN THE PLANS.

☼ FLASHING BEACON

FINES DOUBLE NOTES:

1. SIGNS SHALL NOT BE PLACED SOONER THAN FOUR HOURS BEFORE WORK IS TO BEGIN AND SHALL BE REMOVED AS SOON AS WORK ACTIVITIES ARE CONCLUDED, UNLESS POTENTIAL HAZARDS INTRODUCED AS A RESULT OF THE WORK ARE STILL PRESENT AT THE END OF THE WORK DAY. IF SIGNS ARE LEFT IN PLACE AFTER WORK ACTIVITIES, THE TRAFFIC CONTROL SUPERVISOR SHALL MAKE AN ENTRY IN THEIR DAILY DIARY THAT JUSTIFIES THEIR USE.

   "HAZARDS" INCLUDE BUT ARE NOT LIMITED TO:
   - EDGE DROP OFFS
   - EQUIPMENT, WORKERS OR NON-SHIELDED OBJECTS IN THE CLEAR ZONE
   - ROUGH PAVEMENT
   - MAJOR CHANGE IN ALIGNMENT
   - REDUCED SHOULDER WIDTH
   - TEMPORARY GUARD RAIL OR BARRIER
   - LANE CLOSURE

2. "FINES DOUBLE" SIGNS SHALL ONLY BE PLACED WHERE WORKERS ARE PRESENT IN THE ROADWAY OR CLEAR ZONE OR ARE AT RISK, OR WHERE THERE ARE HAZARDS IN THE TRAVELWAY, SHOULDERS OR CLEAR ZONE.

3. "FINES DOUBLE" SHOULD BE PLACED SO THAT MOTORISTS IMMEDIATELY ASSOCIATE THE SIGNS WITH PRESENT WORK ACTIVITIES. IF THE ZONE OF WORK ACTIVITY MOVES, THE SIGNS SHOULD BE MOVED ACCORDINGLY.

4. SIGNING SHOWN IS REQUIRED TO ENFORCE DOUBLE FINES IN A WORK ZONE. ADDITIONAL SIGNING SHALL BE IN ACCORDANCE WITH THAT NORMALLY REQUIRED FOR THE PARTICULAR WORK ZONE. PLACEMENT OF "FINES DOUBLE" SIGNING MAY BE ADJUSTED AS NEEDED TO PROVIDE A MINIMUM 250' SPACING BETWEEN OTHER SIGNING REQUIRED FOR THE SPECIFIC WORK ZONE SETUP.

No REVISIONS 9/30/09 JK

Computer File Information	
Creation Date: 07-04-06	Initials: KCM
Last Modification Date: 07-04-06	Initials: JSW
Full Path:www.dot.state.co.us/DesignSupport/	
Drawing File Name: S-630-1 (11 of 12)	
CAD Ver.: MicroStation V8 Scale: Not to Scale	Units: English

Sheet Revisions	
Date:	Comments

Colorado Department of Transportation
4201 East Arkansas Avenue
Denver, Colorado 80222
Phone: (303) 757-9543
Fax: (303) 757-9820
Staff Traffic Branch KCM/JSW

TRAFFIC CONTROLS FOR HIGHWAY CONSTRUCTION

Issued By: Traffic Engineering Unit July 4, 2006

STANDARD PLAN NO.
S-630-1
Sheet No. 11 of 12

THESE SIGNING NOTES ARE INTENDED AS A QUICK REFERENCE FOR TYPICAL SIGN USE AND PLACEMENT IN CONSTRUCTION ZONES.

G20-1 "ROAD/WORK/NEXT XX MILES" – THIS SIGN SHALL BE ERECTED AT THE LIMITS OF ANY ROAD CONSTRUCTION OR MAINTENANCE PROJECT OF MORE THAN 2 MILES IN LENGTH WHERE TRAFFIC IS MAINTAINED THROUGH THE PROJECT.

G20-10 THANK YOU SIGN – THIS SIGN SHOULD BE ERECTED APPROXIMATELY 500 FEET BEYOND THE END OF THE PROJECT.

G20-4 "PILOT CAR/FOLLOW ME" – THIS SIGN SHALL BE MOUNTED IN A CONSPICUOUS POSITION ON THE REAR OF A VEHICLE USED FOR GUIDING ONE-WAY TRAFFIC THROUGH OR AROUND THE PROJECT.

M4-9( ) "DETOUR/<<<<<<" – THIS SIGN IS USED FOR UNNUMBERED ROUTES; FOR USE IN EMERGENCY SITUATIONS; FOR PERIODS OF SHORT DURATION; OR WHERE, OVER RELATIVELY SHORT DISTANCES, IT IS NOT NECESSARY TO SHOW ROUTE MARKERS TO GUIDE TRAFFIC ALONG THE DETOUR AND BACK TO ITS AUTHORIZED ROUTE.

M4-10( ) "DETOUR ARROW" – THIS SIGN SHOULD BE MOUNTED JUST BELOW THE ROAD CLOSED SIGN AT THE POINT WHERE THE DETOUR ROADWAY OR ROUTE HAS BEEN ESTABLISHED DUE TO THE CLOSURE OF THE STREET OR HIGHWAY TO THROUGH TRAFFIC.

R2-1( ) "SPEED/LIMIT/XX" – THESE SIGNS ARE INTENDED TO REDUCE TRAFFIC SPEED IN ADVANCE OF THE DAILY WORK AREA WITHIN THE OVERALL PROJECT LIMITS.

R2-1(XX) "SPEED/LIMIT/XX" – THIS SIGN IS INTENDED FOR USE 500 FEET PAST THE "THANK YOU" SIGN TO BRING TRAFFIC BACK TO ORIGINAL POSTED SPEED.

R11-2 "ROAD/CLOSED" – THIS SIGN IS TO BE MOUNTED ON THE BARRICADE THAT IS PLACED BEFORE THE WORK ZONE ENTRANCE TO PROHIBIT TRAFFIC FROM ENTERING THE WORK ZONE.

R11-3 "ROAD CLOSED/X MILES AHEAD/L.T.O. – THIS SIGN SHOULD BE PLACED WHERE THROUGH TRAFFIC MUST DETOUR TO AVOID THE CLOSURE OF THE ROAD SOME DISTANCE BEYOND, BUT WHERE THE ROAD IS OPEN TO LOCAL TRAFFIC UP TO THE POINT OF CLOSURE.

R11-4 "ROAD CLOSED/TO/THRU TRAFFIC" FOR URBAN USE – THIS SIGN SHOULD BE PLACED WHERE THROUGH TRAFFIC MUST DETOUR TO AVOID THE CLOSURE OF THE ROAD SOME DISTANCE BEYOND, BUT WHERE THE ROAD IS OPEN TO LOCAL TRAFFIC UP TO THE POINT OF CLOSURE.

W1-1( ) "TURN ARROW" – THIS SIGN IS INTENDED FOR USE WHERE ENGINEERING INVESTIGATIONS OF ROADWAY CONDITIONS SHOW THE RECOMMENDED SPEED ON THE TURN TO BE 30 MPH OR LESS. *

W1-2( ) "CURVE ARROW" – THIS SIGN IS INTENDED FOR USE WHERE ENGINEERING INVESTIGATIONS OF ROADWAY CONDITIONS SHOW THE RECOMMENDED SPEED ON THE CURVE TO BE IN THE RANGE BETWEEN 30 AND 60 MILES PER HOUR. *

W1-3( ) "REVERSE TURN ARROW" – THIS SIGN IS INTENDED FOR USE WHERE TWO TURNS OR THE CURVE AND A TURN IN OPPOSITE DIRECTIONS ARE SEPARATED BY A TANGENT OF LESS THAN 600 FEET. *

W1-4( ) "REVERSE CURVE ARROW" – THIS SIGN IS INTENDED FOR USE WHERE TWO CURVES IN OPPOSITE DIRECTIONS ARE SEPARATED BY A TANGENT OF LESS THAN 600 FEET. *

W1-6( ) "ARROW" – THIS SIGN SHOULD BE MOUNTED JUST BELOW THE ROAD CLOSED SIGN AT THE POINT WHERE THE DIVERSION HAS BEEN ESTABLISHED DUE TO THE LANE CLOSURE.

W3-2 "YIELD AHEAD" – THIS SIGN IS INTENDED FOR USE AT THE APPROACH TO THE YIELD SIGN THAT IS NOT VISIBLE FOR A SUFFICIENT DISTANCE TO PERMIT THE DRIVER TO BRING HIS VEHICLE TO A STOP AT THE YIELD SIGN. *

W4-2 "LEFT (RIGHT) LANE TRANSITION SYMBOL" – THIS SIGN IS INTENDED FOR USE IN ADVANCE OF THE REDUCTION IN THE NUMBER OF TRAFFIC LANES IN THE DIRECTION OF TRAVEL ON THE MULTILANE HIGHWAY. *

W5-1 "ROAD NARROWS" – THIS SIGN IS INTENDED FOR USE IN ADVANCE OF THE TRANSITION ON THE ROAD WHERE THE PAVEMENT WIDTH IS REDUCED ABRUPTLY TO A WIDTH SUCH THAT TWO CARS CANNOT PASS WITHOUT REDUCING SPEED. *

W5-2a "NARROW BRIDGE SYMBOL" – THIS SIGN IS INTENDED FOR USE IN ADVANCE OF A BRIDGE OR CULVERT HAVING A CLEAR TWO-WAY ROADWAY WIDTH OF 16 TO 18 FEET OR ANY BRIDGE OR CULVERT HAVING A ROADWAY CLEARANCE LESS THAN THE WIDTH OF THE APPROACH PAVEMENT. *

W5-3 "ONE LANE/BRIDGE" – THIS SIGN SHOULD BE PLACED ON TWO-WAY ROADWAYS IN ADVANCE OF THE BRIDGES OR CULVERTS WHERE THE ROADWAY WIDTH IS LESS THAN 16 FEET (18 FEET FOR COMMERCIAL VEHICLES) OR WHEN THE ALIGNMENT IS POOR ON THE APPROACH TO THE STRUCTURE HAVING A CLEAR ROADWAY WIDTH OF 18 FEET OR LESS. *

W6-1 "DIVIDED HIGHWAY SYMBOL" – THIS SIGN SHOULD BE PLACED ON THE APPROACHES TO THE SECTION OF HIGHWAY WHERE OPPOSING FLOWS OF TRAFFIC ARE SEPARATED BY A PHYSICAL MEDIAN.

W6-2 "DIVIDED HIGHWAY ENDS SYMBOL" – THIS SIGN SHOULD BE PLACED AT THE END OF THE SECTION OF PHYSICALLY DIVIDED HIGHWAY AS A WARNING OF TWO-WAY TRAFFIC AHEAD.

TYPICAL CONSTRUCTION ZONE SIGNS

W6-3 "TWO-WAY TRAFFIC SYMBOL" – THIS SIGN IS INTENDED FOR USE TO GIVE WARNING OF TRANSITION FROM A SEPARATED ONE-WAY ROADWAY TO A TWO-WAY ROADWAY. *

W7-1 "HILL SYMBOL" – THIS SIGN SHOULD BE PLACED AT A POINT IN ADVANCE OF THE DOWNGRADE WHERE THE LENGTH, PERCENT OF GRADE, HORIZONTAL CURVATURE, OR OTHER PHYSICAL FEATURES REQUIRE SPECIAL CONSIDERATION ON THE PART OF DRIVERS. *

W8-1,W8-2 "BUMP"/"DIP" – THESE SIGNS ARE INTENDED FOR USE TO GIVE WARNING OF A SHARP RISE OR DEPRESSION IN THE PROFILE OF THE ROAD THAT IS SUFFICIENTLY ABRUPT TO AFFECT VEHICLE OPERATION OR CAUSE CONSIDERABLE DISCOMFORT TO PASSENGERS. *

W8-3a "PAVEMENT ENDS SYMBOL" – THIS SIGN IS INTENDED FOR USE IN ADVANCE OF A POINT WHERE THE PAVEMENT SURFACE CHANGES FROM A HARD-SURFACED PAVEMENT TO THE LOW-TYPE SURFACE OR EARTH ROAD. *

W8-4 "SOFT SHOULDER" – THIS SIGN IS INTENDED FOR USE TO WARN OF A SOFT SHOULDER CONDITION THAT COULD PRESENT A PROBLEM TO VEHICLES THAT MAY GET OFF THE PAVEMENT. *

W8-5 "SLIPPERY WHEN WET SYMBOL" – THIS SIGN SHOULD BE PLACED IN ADVANCE OF THE CONDITION WHERE THE HIGHWAY SURFACE IS SLIPPERY BEYOND WHAT IS ORDINARY WHEN WET. *

W8-9a "SHOULDER DROP-OFF" – THIS SIGN IS INTENDED FOR USE IN ADVANCE OF A SHOULDER DROP-OFF THAT EXCEEDS THREE INCHES IN HEIGHT. *

W8-11 "UNEVEN LANES" – THIS SIGN IS INTENDED FOR USE IN ADVANCE OF AN UNEVEN ADJACENT LANE SITUATION THAT EXCEEDS ONE INCH IN HEIGHT. *

W9-1( ) "LEFT (RIGHT) LANE ENDS" – THIS SIGN IS INTENDED FOR USE IN ADVANCE OF THE PAVEMENT WIDTH TRANSITION SIGN (W4-2).

W9-2( ) "LANE ENDS/MERGE LEFT (RIGHT)" – THIS SIGN IS INTENDED FOR USE AS A SUPPLEMENT TO THE PAVEMENT WIDTH TRANSITION SIGN (W4-2).

W9-3 OR W9-3a( ) "CENTER LANE CLOSED AHEAD" – THIS SIGN SHOULD BE USED IN ADVANCE OF THE POINT WHERE WORK OCCUPIES THE CENTER LANE AND TRAFFIC IS DIRECTED TO THE RIGHT OR LEFT OF THE WORK ZONE. *

W12-1 "DOUBLE ARROW SYMBOL" – THIS SIGN SHOULD BE PLACED AT THE POINT OF THE OBSTRUCTION IN THE ROADWAY, WHERE TRAFFIC IS PERMITTED TO PASS ON EITHER SIDE OF THE OBSTRUCTION.

W12-2 "LOW CLEARANCE SYMBOL" – THIS SIGN IS INTENDED FOR USE IN ADVANCE OF AN OBSTRUCTION TO WARN VEHICLE OPERATORS OF CLEARANCES LESS THAN THE MAXIMUM VEHICLE HEIGHT PERMITTED PLUS 12 INCHES. *

W13-1( ) "ADVISORY SPEED PLAQUE" – THIS SIGN IS INTENDED TO SUPPLEMENT WARNING SIGNS ONLY AND SHALL NOT BE MOUNTED ALONE. IT IS USED TO INDICATE THE MAXIMUM RECOMMENDED SPEED FOR THE INDICATED CONDITION.

W20-1 "ROAD/WORK/AHEAD" – THIS SIGN IS TO BE LOCATED IN ADVANCE OF THE INITIAL ACTIVITY OR DETOUR A DRIVER MAY ENCOUNTER, AND IS INTENDED TO BE USED AS A WARNING OF OBSTRUCTIONS OR RESTRICTIONS.

W20-2 "DETOUR/(DIST.)" – THIS SIGN IS INTENDED FOR USE IN ADVANCE OF THE POINT AT WHICH TRAFFIC IS DIVERTED OVER A TEMPORARY ROADWAY OR ROUTE.

W20-3 "ROAD/CLOSED/(DIST.)" – THIS SIGN IS INTENDED FOR USE IN ADVANCE OF A POINT AT WHICH A ROADWAY IS CLOSED TO ALL TRAFFIC OR TO ALL BUT LOCAL TRAFFIC.

W20-4 "ONE LANE/ROAD/(DIST.)" – THIS SIGN IS INTENDED FOR USE IN ADVANCE OF A POINT WHERE TRAFFIC IN BOTH DIRECTIONS MUST USE A SINGLE LANE.

W20-5( ) "XXX LANE/CLOSED/(DIST.)" – THIS SIGN IS INTENDED FOR USE IN ADVANCE OF A POINT WHERE ONE LANE OF A MULTIPLE-LANE ROADWAY IS CLOSED. IT SHOULD BE PROVIDED WITH INTERCHANGEABLE PLAQUES READING "RIGHT", "LEFT", AND "CENTER" AT NO ADDITIONAL COST TO THE PROJECT.

W20-7a "FLAGGER SYMBOL" – THIS SIGN IS INTENDED FOR USE IN ADVANCE OF ANY POINT AT WHICH A FLAGGER HAS BEEN STATIONED TO CONTROL TRAFFIC THROUGH OR AROUND THE PROJECT. *

W20-52 "GROOVED/PAVEMENT/AHEAD" – THIS SIGN IS INTENDED TO BE USED IN ADVANCE OF A ROADWAY THAT HAS BEEN GROOVED AND/OR ROTO MILLED.

W21-1a "WORKER SYMBOL" – THIS SIGN IS INTENDED FOR USE IN CONJUNCTION WITH MINOR MAINTENANCE AND PUBLIC UTILITY OPERATIONS FOR THE PROTECTION OF MEN WORKING IN OR NEAR THE ROADWAY.

W21-2 "FRESH/OIL" – THIS SIGN IS INTENDED FOR USE WHERE RE-SURFACING OPERATIONS HAVE RENDERED THE SURFACE OF THE PAVEMENT TEMPORARILY WET, AND OBJECTIONABLE SPLASHING ON VEHICLES MAY OCCUR. *

W21-3 "ROAD/MACHINERY/AHEAD" – THIS SIGN IS INTENDED FOR USE IN ADVANCE OF THE AREAS WHERE HEAVY EQUIPMENT IS OPERATING IN OR ADJACENT TO THE ROADWAY. *

W21-4 "ROAD/WORK/(DIST.)" – THIS SIGN IS INTENDED FOR USE IN ADVANCE OF MAINTENANCE FOR MINOR RECONSTRUCTION OPERATIONS IN THE ROADWAY.

W21-5 "SHOULDER/WORK" – THIS SIGN IS INTENDED FOR USE IN ADVANCE OF THE PROJECT INVOLVING THE SHOULDER, WHERE THE TRAVELED WAY REMAINS UNOBSTRUCTED.

W21-6 "SURVEY/CREW" – THIS SIGN IS INTENDED FOR USE IN ADVANCE OF A POINT WHERE A SURVEYING CREW IS WORKING IN OR ADJACENT TO THE ROADWAY. *

W22-1 "BLASTING/ZONE/(DIST.)" – THIS SIGN IS INTENDED FOR USE IN ADVANCE OF ANY POINT OR WORK SITE WHERE THERE ARE EXPLOSIVES BEING USED. THE W22-2 AND W22-3 SIGNS MUST BE USED IN SEQUENCE WITH THIS SIGN.

W22-2 "TURN OFF/2-WAY RADIOS/AND/CELLULAR/PHONES" – THIS SIGN IS TO BE USED IN SEQUENCE WITH THE W22-1 AND W22-3 SIGNS AND PLACED AT LEAST 1000 FEET FROM THE BEGINNING OF THE BLASTING ZONE.

W22-3 "END/BLASTING/ZONE" – THIS SIGN IS TO BE USED TO DENOTE THE END OF THE RADIO INFLUENCE AREA AND SHALL BE PLACED A MINIMUM OF 1000 FEET FROM THE BLASTING ZONE, EITHER WITH OR PRECEDING THE END CONSTRUCTION SIGN.

ADVANCE PLACEMENT OF WARNING SIGNS

POSTED OR 85TH PERCENTILE SPEED	ADVANCE PLACEMENT DISTANCE (FEET)								
	+ CONDITION A	++ CONDITION B: DECLARATION TO THE LISTED ADVISORY SPEED (MPH) FOR THE CONDITION							
		MPH							
		0	10	20	30	40	50	60	70
20	225	●	●	---	---	---	---	---	---
25	325	●	●	●	---	---	---	---	---
30	450	●	●	●	---	---	---	---	---
35	550	●	●	●	●	---	---	---	---
40	650	125	●	●	●	---	---	---	---
45	750	175	125	●	●	●	---	---	---
50	850	250	200	150	100	●	---	---	---
55	950	325	275	225	175	100	●	---	---
60	1100	400	350	300	250	175	●	---	---
65	1200	475	425	400	350	275	175	●	---
70	1250	550	525	500	425	350	250	150	---
75	1350	650	625	600	525	450	350	250	100

+ CONDITION A: SPEED REDUCTION AND LANE CHANGING IN HEAVY TRAFFIC. TYPICAL SIGNS ARE "MERGE" AND "RIGHT LANE ENDS".

++ CONDITION B: TYPICAL CONDITIONS ARE THE WARNING OF A POTENTIAL STOP SITUATION AND LOCATIONS WHERE THE ROAD USER MUST DECREASE SPEED TO MANEUVER THROUGH THE WARNED CONDITION. TYPICAL SIGNS ARE "STOP AHEAD", "SIGNAL AHEAD", "YIELD AHEAD", "CURVE", "REVERSE CURVE", "TURN".

● NO SUGGESTED DISTANCES ARE PROVIDED AT THESE SPEEDS, AS THE PLACEMENT IS DEPENDENT ON SITE CONDITIONS AND OTHER SIGNING.

A SUPPLEMENTAL PLAQUE MAY BE USED WITH WARNING SIGNS SPECIFYING THE DISTANCE TO THE CONDITION IF THERE IS AN IN-BETWEEN INTERSECTION THAT MIGHT CONFUSE THE MOTORIST.

No revisions 9/30/09

* PLACEMENT SHOULD BE IN ACCORDANCE WITH WARNING SIGN PLACEMENT TABLE.

Computer File Information	
Creation Date: 07-04-06	Initials: KCM
Last Modification Date: 07-04-06	Initials: JSW
Full Path:www.dot.state.co.us/DesignSupport/	
Drawing File Name: S-630-1 (12 of 12)	
CAD Ver.: MicroStation V8 Scale: Not to Scale	Units: English

Sheet Revisions	
Date:	Comments

Colorado Department of Transportation
4201 East Arkansas Avenue
Denver, Colorado 80222
Phone: (303) 757-9543
Fax: (303) 757-9820
Staff Traffic Branch KCM/JSW

TRAFFIC CONTROLS FOR HIGHWAY CONSTRUCTION

Issued By: Traffic Engineering Unit July 4, 2006

STANDARD PLAN NO.

S-630-1

Sheet No. 12 of 12