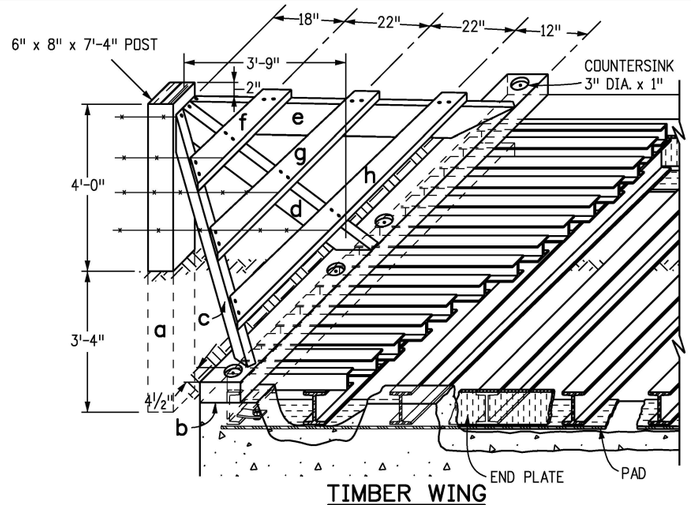

TIMBER WING

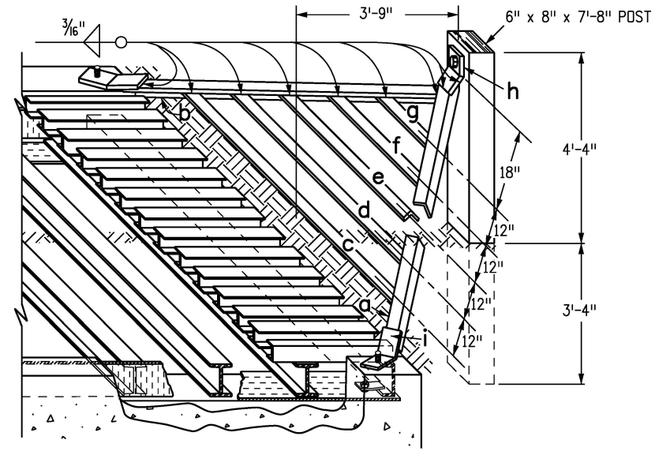

STEEL WING

TYPICAL CATTLE GUARD INSTALLATIONS

GENERAL NOTES

1. CONCRETE SHALL BE CLASS B. FOUNDATION MAY BE CAST-IN-PLACE OR PRECAST.
2. REINFORCING BARS SHALL BE #4, GRADE 60.
3. ALL TIMBER SHALL BE TREATED IN CONFORMANCE WITH ASSHTO M 133 AND AWPA C14.
4. WING POSTS MAY BE MADE FROM 8 IN. ROUND NATIVE TIMBER.
5. ALL STRUCTURAL STEEL SHALL BE FABRICATED AND PAINTED WITH ALUMINUM PAINT IN ACCORDANCE WITH SECTION 509. ALL HARDWARE SHALL BE GALVANIZED IN CONFOMRANCE WITH AASHTO M 111 OR PAINTED WITH ZINC-RICH PAINT MEETING MILITARY SPECIFICATION DOD-P-21035
6. ALL STRUCTURAL STEEL SHALL CONFORM TO AASHTO M 270 (ASTM A 709) GRADE 36.
7. WELDING SHALL CONFORM TO THE AWS STRUCTURAL WELDING CODE AND AASHTO STANDARD SPECIFICATIONS FOR WELDING OF STRUCTURAL STEEL HIGHWAY BRIDGES.
8. WHEN A CATTLE GUARD IS TO BE INSTALLED IN IMPERVIOUS MATERIAL, ADEQUATE DRAINAGE SHALL BE PROVIDED TO INSURE AGAINST POSSIBLE SUBGRADE DAMAGE. DRAINAGE DETAILS SHALL BE AS SHOWN ON THE PLANS. AN OUTLET PIPE MAY BE CONSIDERED.
9. TYPE OF WING (TIMBER OR STEEL) SHALL BE STEEL UNLESS OTHERWISE SHOWN ON THE PLANS.
10. STRUCTURE EXCAVATION AND STRUCTURE BACKFILL WILL NOT BE MEASURED AND PAID FOR SEPARATELY, BUT SHALL BE INCLUDED IN THE WORK.
11. ALTERNATIVE CATTLE GUARDS MAY BE CONSTRUCTED UPON APPROVAL BY THE PROJECT ENGINEER.

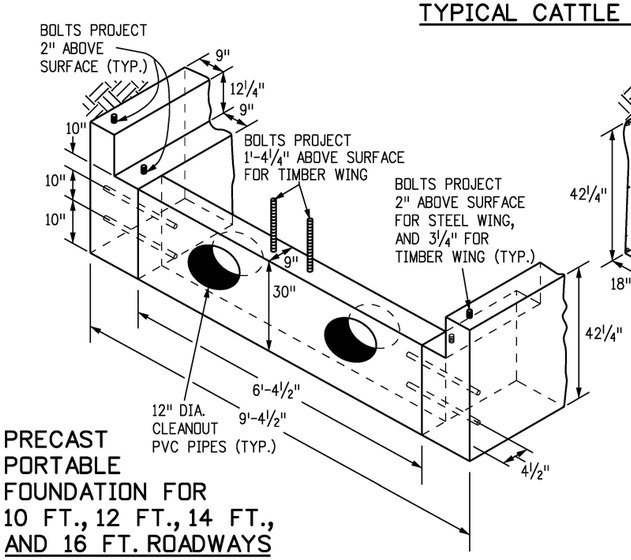

PRECAST PORTABLE FOUNDATION FOR 10 FT., 12 FT., 14 FT., AND 16 FT. ROADWAYS

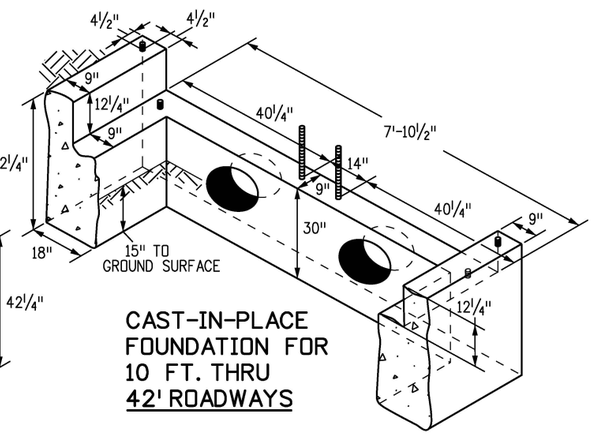

CAST-IN-PLACE FOUNDATION FOR 10 FT. THRU 42' ROADWAYS

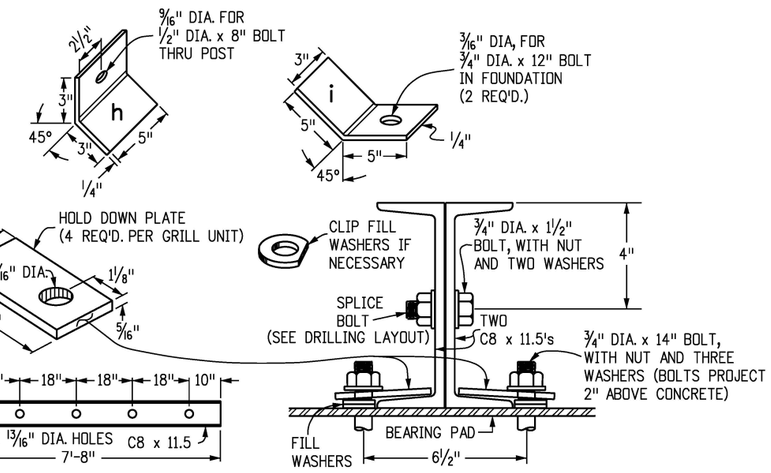

DRILLING LAYOUT

MULTIPLE GRILL UNIT CONNECTION

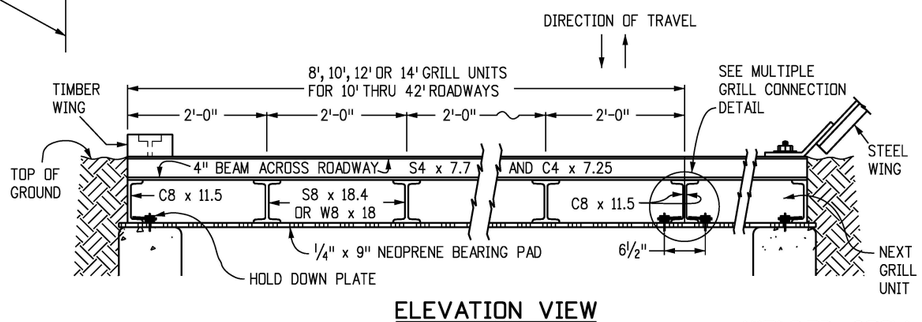

ELEVATION VIEW

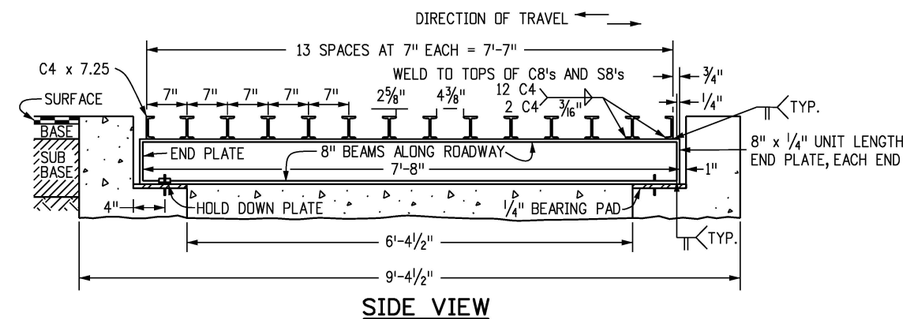

SIDE VIEW

WELDED GRILL CROSS SECTIONS

Computer File Information		Sheet Revisions	
Creation Date: 07/31/19		Date:	Comments
Designer Initials: JBK	(R-X)		
Last Modification Date: 07/31/19	(R-X)		
Detailer Initials: LTA	(R-X)		
CAD Ver.: MicroStation V8 Scale: Not to Scale Units: English	(R-X)		

Colorado Department of Transportation
2829 West Howard Place
CDOT HQ, 3rd Floor
Denver, CO 80204
Phone: 303-757-9021 FAX: 303-757-9868
Project Development Branch JBK

CATTLE GUARD

Issued by the Project Development Branch: July 31, 2019

STANDARD PLAN NO.
M-611-1
Standard Sheet No. 1 of 2
Project Sheet Number:

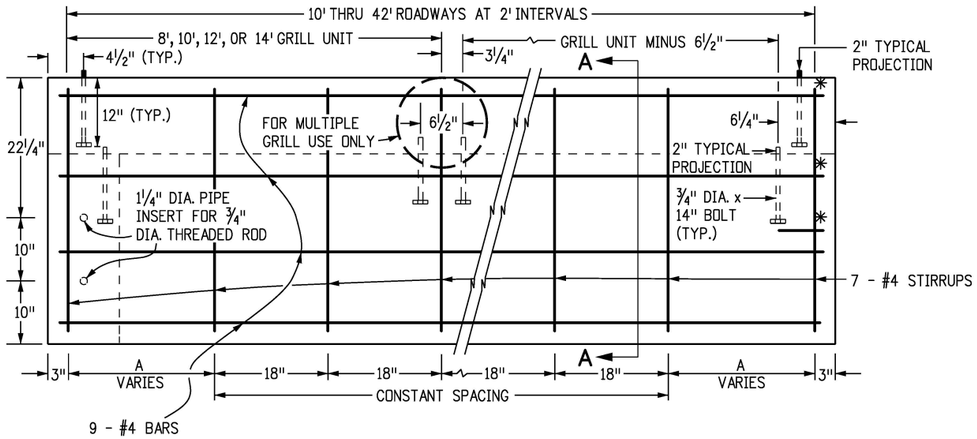

PRECAST PORTABLE FOUNDATION

CAST-IN-PLACE FOUNDATION

ELEVATION OF FOUNDATION

* WHEN CAST IN PLACE, LONGITUDINAL BARS EXTENDING FROM AND INTO THE LATERAL SUPPORT SHALL BE BENT 90° WITH A 2 IN. RADIUS AND CONTINUE PERPENDICULARY 10 IN. FROM THE BEND

a - 6" x 8" x 7'-4"
b - 4" x 8" x 9'-4½"
c - 2" x 6" x 6'-7"
d - 2" x 6" x 5'-8"
e - 2" x 6" x 6'-7"
f - 2" x 6" x 2'-5"
g - 2" x 6" x 4'-4"
h - 2" x 6" x 6'-2"
16d NAILS (GALV.) - 2 LB.

ONE TIMBER WING

a - 2" x 2" x ¼" x 79" b - 2" x 2" x ¼" x 79" c - 2" x 2" x ¼" x 84"	63.26 LBS.
d - 1½" x 1½" x ¼" x 69" e - 1½" x 1½" x ¼" x 55" f - 1½" x 1½" x ¼" x 40" g - 1½" x 1½" x ¼" x 25"	36.86 LBS.
h - 5" x 6" x ¼" x BAR - 2.13 LBS.	
i - TWO 3" x 10" x ¼" x BARS - 4.25 LBS.	
6" x 8" x 7'-8" TIMBER POST ———	
TOTAL LBS. STEEL = ~106.5	

ONE STEEL WING

WING QUANTITIES

ROADWAY WIDTH (FT.)	USE GRILL UNITS (FT.)	PRECAST		CAST-IN-PLACE		A (IN.)	TOTAL GRILL WEIGHT (LBS.)
		CONCRETE (CU. YD.)	REINF. STEEL (LBS.)	CONCRETE (CU. YD.)	REINF. STEEL (LBS.)		
10 12	10 12	5.6 6.5	295 342	5.6 6.5	316 364	24 18	1946 2328
14 16	14 8 8	7.4 8.1	378 414	7.4 8.1	399 435	21 24	2170 3128
18 20	8 10 10 10			9.0 9.8	482 518	18 21	3434 3806
22 24	10 12 12 12			10.6 11.5	553 601	24 18	4274 4656
26 28	12 14 14 14			12.3 13.1	636 672	21 24	5038 5420
30 32	10 10 10 10 12 10			13.9 14.8	719 755	18 21	5838 6220
34 36	12 10 12 12 12 12			15.5 16.4	790 838	24 18	6602 6984
38 40 42	12 14 12 14 12 14 14 14 14			17.3 18.0 18.9	873 909 956	21 24 18	7366 7748 8130

FOUNDATION QUANTITIES

SIZE	WEIGHT (LBS.)
8'	1564
10'	1946
12'	2328
14'	2710

WELDED GRILL UNITS

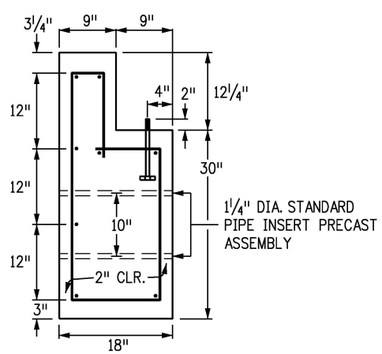

END SECTION OF FOUNDATION

SECTION A-A

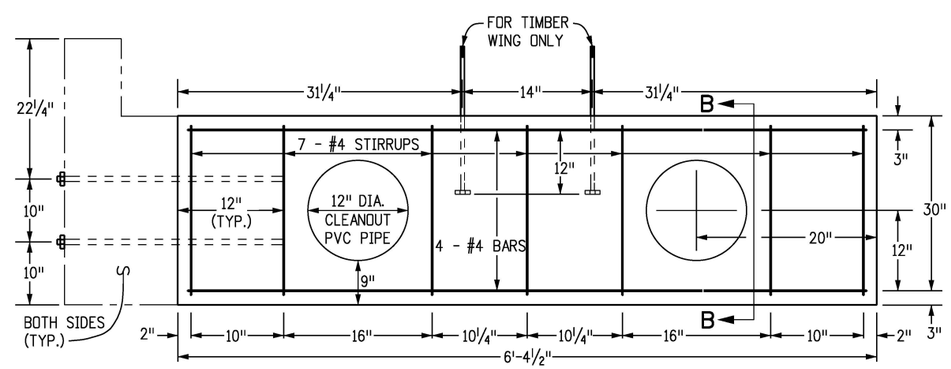

ELEVATION OF LATERAL SUPPORT

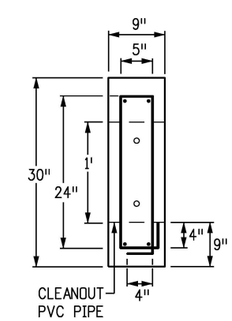

LATERAL SUPPORT

SECTION B-B

Computer File Information		Sheet Revisions	
Creation Date: 07/31/19		Date:	Comments
Designer Initials: JBK	(R-X)		
Last Modification Date: 07/31/19	(R-X)		
Detailer Initials: LTA	(R-X)		
CAD Ver.: MicroStation V8 Scale: Not to Scale Units: English	(R-X)		

Colorado Department of Transportation
2829 West Howard Place
CDOT HQ, 3rd Floor
Denver, CO 80204
Phone: 303-757-9021 FAX: 303-757-9868
Project Development Branch JBK

CATTLE GUARD

Issued by the Project Development Branch: July 31, 2019

STANDARD PLAN NO.

M-611-1

Standard Sheet No. 2 of 2

Project Sheet Number: