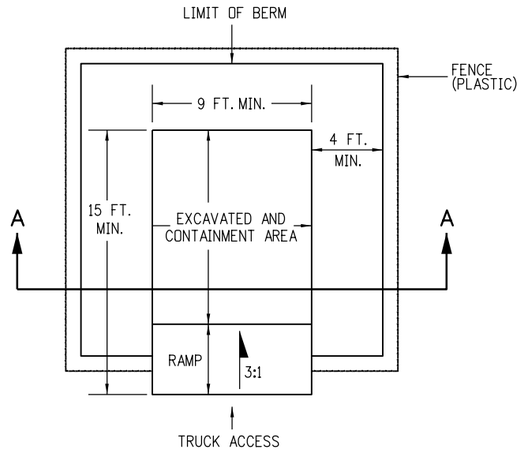

PLAN VIEW

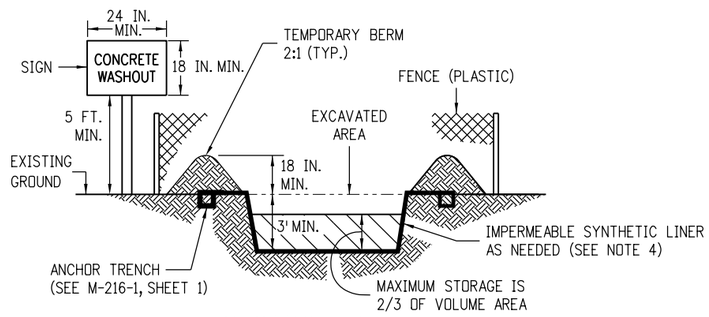

SECTION A-A

NOTES:

1. A FENCE (PLASTIC) CONFORMING TO SECTION 607 SHALL BE INSTALLED AROUND THE CONCRETE WASHOUT STRUCTURE, EXCEPT AT THE OPENING.
2. THE CONCRETE WASHOUT SIGN SHALL HAVE LETTERS AT LEAST 3 INCHES HIGH AND CONFORM TO SUBSECTION 630.02.
3. ALL MATERIALS AND LABOR TO COMPLETE THE CONCRETE WASHOUT STRUCTURE SHALL BE INCLUDED IN THE COST OF WORK AND NOT PAID FOR SEPARATELY.
4. THE BOTTOM OF EXCAVATION SHALL BE A MINIMUM OF FIVE FEET ABOVE GROUND WATER. IF NOT, THE BOTTOM OF EXCAVATION SHALL BE IN ACCORDANCE WITH 208.02 (k).
5. THE PAY ITEM NUMBER FOR CONCRETE WASHOUT STRUCTURE (EACH) IS 208-00045.

CONCRETE WASHOUT STRUCTURE

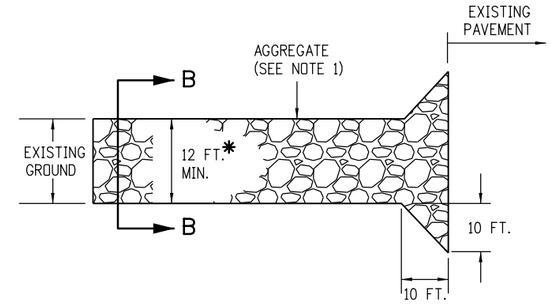

PLAN VIEW

* SHALL EXTEND FULL WIDTH OF INGRESS AND EGRESS OPERATION.

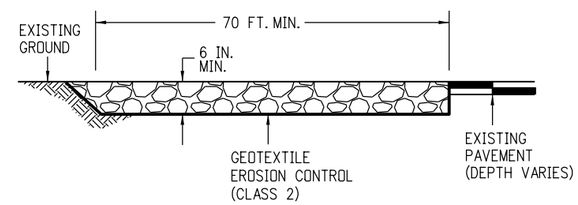

ELEVATION SECTION

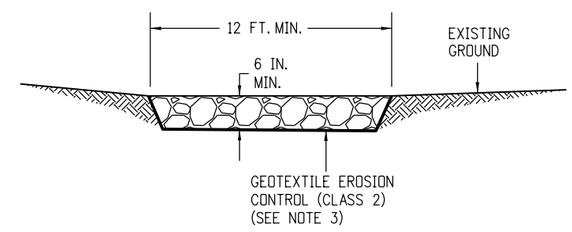

SECTION B-B

NOTES:

1. AGGREGATE SHALL CONFORM TO SUBSECTION 208.02 (m).
2. THE CONTRACTOR SHALL PROTECT CURB AND GUTTER THAT CROSSES THE ENTRANCE FROM DAMAGE, WHILE NOT BLOCKING FLOW OF WATER THRU STRUCTURE. PROTECTION OF THE CURB AND GUTTER SHALL BE INCLUDED IN THE COST OF WORK AND NOT PAID FOR SEPARATELY.
3. GEOTEXTILE SHALL CONFORM TO SUBSECTION 712.08.
4. ALL MATERIALS AND LABOR TO COMPLETE THE VEHICLE TRACKING PAD SHALL BE INCLUDED IN THE COST OF WORK AND NOT PAID FOR SEPARATELY.
5. THE PAY ITEM NUMBER FOR VEHICLE TRACKING PAD (EACH) IS 208-00070.

VEHICLE TRACKING PAD

Computer File Information		Sheet Revisions	
Creation Date: 07/31/19		Date:	Comments
Designer Initials: DK	(R-X)	05/16/24	Revised Concrete Washout Structure Notes 1 and 4, and Vehicle Tracking Pad Note 1.
Last Modification Date: 05/16/24	(R-X)		
Detailer Initials: LTA	(R-X)		
CAD Ver.: MicroStation V8 Scale: Not to Scale Units: English	(R-X)		

Colorado Department of Transportation
2829 West Howard Place
CDOT HQ, 3rd Floor
Denver, CO 80204
Phone: 303-757-9021 FAX: 303-757-9868
Construction Engineering Services DK

TEMPORARY EROSION CONTROL

Issued by the Project Development Branch: July 31, 2019

STANDARD PLAN NO.
M-208-1
Standard Sheet No. 1 of 11
Project Sheet Number:

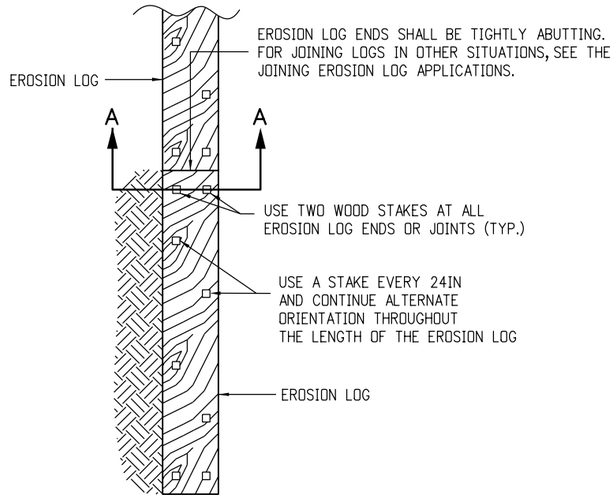

PLAN VIEW

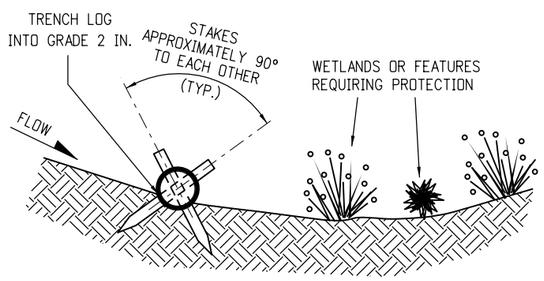

SECTION A-A

TYPICAL STAKE INSTALLATION

EROSION LOGS PAY ITEMS	
NUMBER	DESCRIPTION
208-00012	TYPE 1 (9 IN.)
208-00002	TYPE 1 (12 IN.)
208-00013	TYPE 1 (20 IN.)
208-00007	TYPE 2 (8 IN.)
208-00008	TYPE 2 (12 IN.)
208-00009	TYPE 2 (18 IN.)
208-00022	TYPE 3 (9 IN.)
208-00023	TYPE 3 (12 IN.)
208-00024	TYPE 3 (20 IN.)

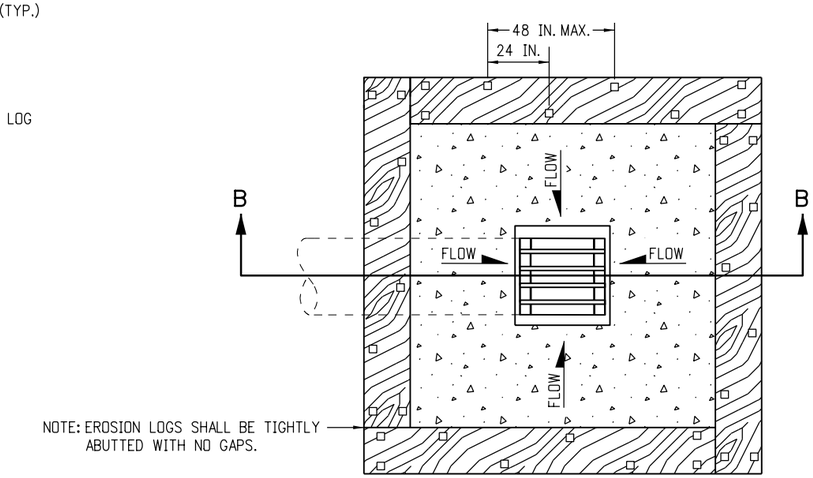

PLAN VIEW

NOTE: THE TOPS OF ALL STAKES SHALL NOT EXTEND MORE THAN 2 INCHES ABOVE THE TOPS OF EROSION LOGS.

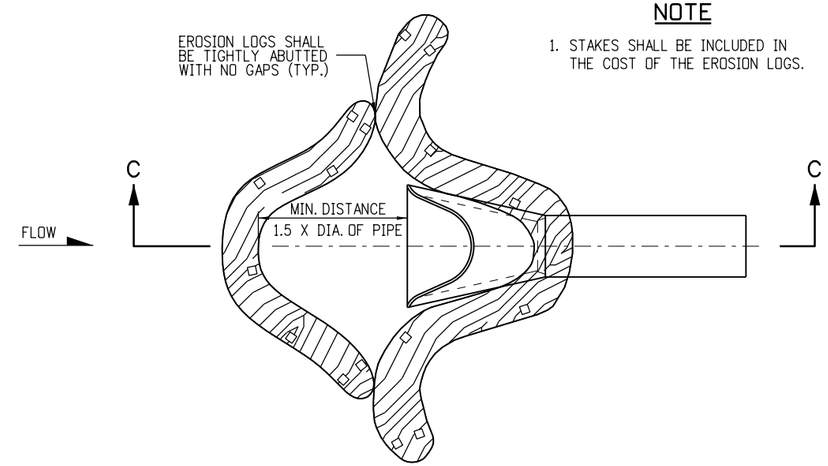

PLAN VIEW

NOTE

1. STAKES SHALL BE INCLUDED IN THE COST OF THE EROSION LOGS.

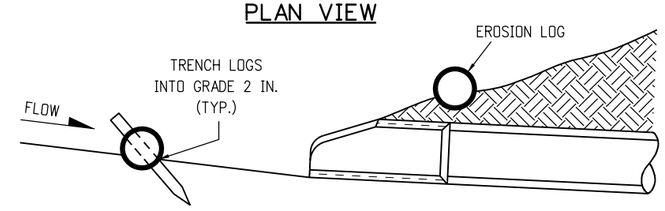

SECTION C-C
(NOT ALL LOGS SHOWN)

NOTE: TOP OF STAKE SHALL NOT EXTEND PAST TOP OF EROSION LOG MORE THAN 2 IN.

EROSION LOG CULVERT INLET PROTECTION

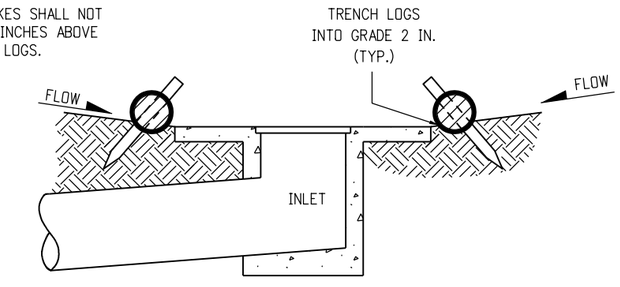

SECTION B-B

NOTE: LOCATE EROSION LOGS AT THE OUTSIDE EDGE OF THE CONCRETE APRON.

EROSION LOG FILTER AT DROP INLET

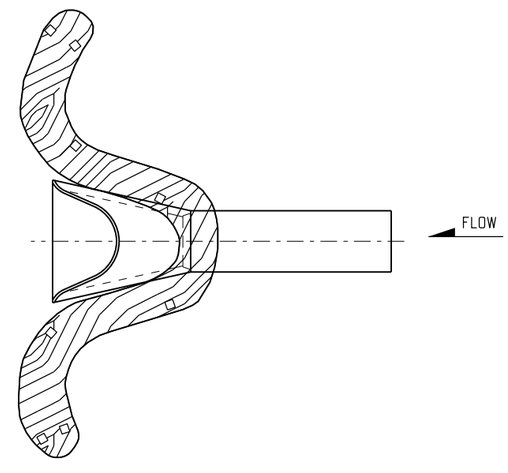

EROSION LOG CULVERT OUTLET PROTECTION

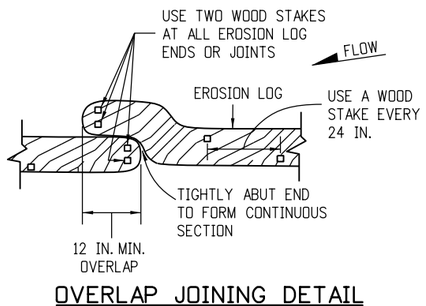

OVERLAP JOINING DETAIL

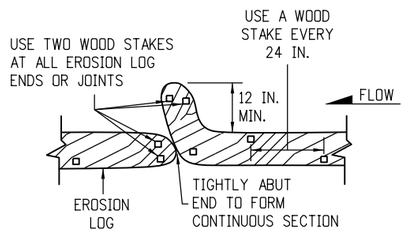

J-HOOK JOINING DETAIL

JOINING EROSION LOG APPLICATIONS

EROSION LOG (SEDIMENT CONTROL LOG) APPLICATIONS

Computer File Information		Sheet Revisions	
Creation Date: 07/31/19		Date:	Comments
Designer Initials: DK	(R-X)	05/16/24	Added "Erosion Logs...No Gaps" dimension note to the "... Drop Inlet" plan view. Revised title.
Last Modification Date: 05/16/24	(R-X)		
Detailer Initials: LTA	(R-X)		
CAD Ver.: MicroStation V8 Scale: Not to Scale Units: English	(R-X)		

Colorado Department of Transportation
2829 West Howard Place
CDOT HQ, 3rd Floor
Denver, CO 80204
Phone: 303-757-9021 FAX: 303-757-9868
Construction Engineering Services DK

TEMPORARY EROSION CONTROL

Issued by the Project Development Branch: July 31, 2019

STANDARD PLAN NO.
M-208-1
Standard Sheet No. 2 of 11
Project Sheet Number:

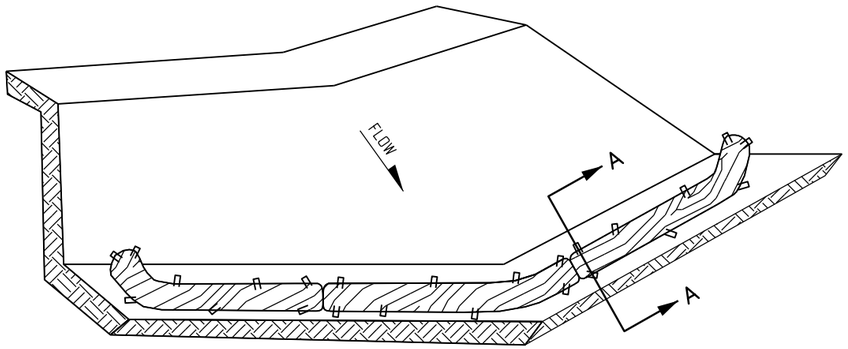

ISOMETRIC VIEW

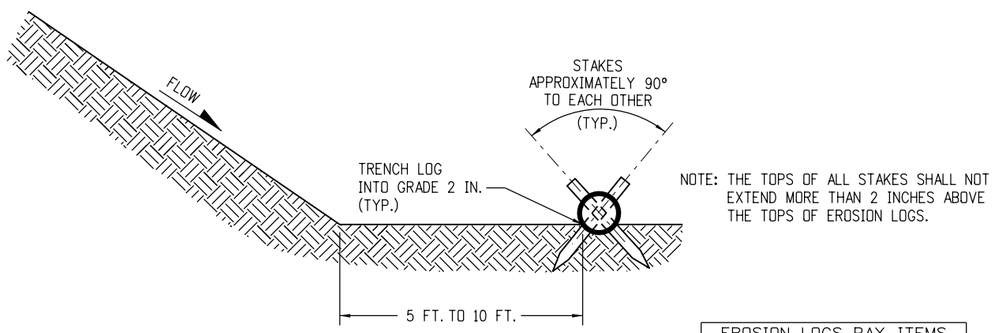

NOTE: THE TOPS OF ALL STAKES SHALL NOT EXTEND MORE THAN 2 INCHES ABOVE THE TOPS OF EROSION LOGS.

SECTION A-A

NOTES:

1. EROSION LOGS USED AT TOE OF SLOPE SHALL BE PLACED 5 TO 10 FEET BEYOND TOE OF SLOPE TO PROVIDE STORAGE CAPACITY.
2. EROSION LOGS SHALL BE PLACED ON THE CONTOUR WITH ENDS FLARED UP SLOPE.
3. SEE SHEET 2 OF 11 FOR JOINING LOGS DETAIL.

EROSION LOGS PAY ITEMS	
NUMBER	DESCRIPTION
208-00012	TYPE 1 (9 IN.)
208-00002	TYPE 1 (12 IN.)
208-00013	TYPE 1 (20 IN.)
208-00007	TYPE 2 (8 IN.)
208-00008	TYPE 2 (12 IN.)
208-00009	TYPE 2 (18 IN.)
208-00022	TYPE 3 (9 IN.)
208-00023	TYPE 3 (12 IN.)
208-00024	TYPE 3 (20 IN.)

EROSION LOG TOE OF SLOPE PROTECTION

NOTES

1. SILT FENCE SHALL HAVE A MAXIMUM DRAINAGE AREA OF ONE-QUARTER ACRE PER 100 FEET OF SILT FENCE LENGTH; MAXIMUM SLOPE LENGTH BEHIND BARRIER IS 100 FEET.
2. SILT FENCE USED AT TOE OF SLOPE SHALL BE PLACED 5 TO 10 FEET BEYOND TOE OF SLOPE TO PROVIDE STORAGE CAPACITY.
3. SILT FENCE SHALL BE PLACED PARALLEL TO THE CONTOUR WITH ENDS FLARED UP SLOPE.
4. THE MAXIMUM LENGTH OF EROSION LOGS OR SILT FENCES WITHOUT A FLARED END TURNING UPSLOPE IS 150 FEET.

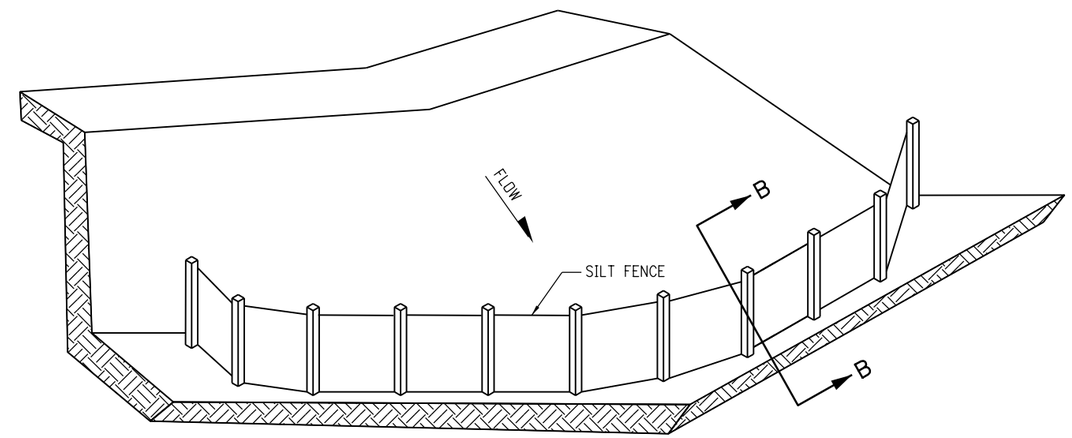

ISOMETRIC VIEW

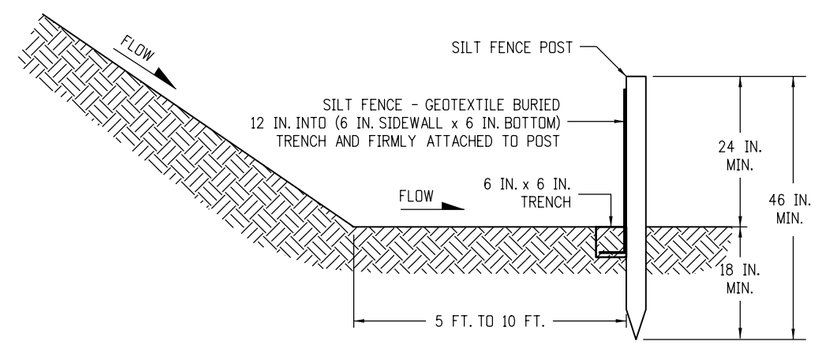

SECTION B-B

SILT FENCE TOE OF SLOPE PROTECTION

NOTE: THE PAY ITEM NUMBER FOR SILT FENCE (LF) IS 208-00020.

TOE OF SLOPE PROTECTION APPLICATIONS

Computer File Information		Sheet Revisions	
Creation Date: 07/31/19		Date:	Comments
Designer Initials: DK	(R-X)		
Last Modification Date: 05/16/24	(R-X)		
Detailer Initials: LTA	(R-X)		
CAD Ver.: MicroStation V8 Scale: Not to Scale Units: English	(R-X)		

Colorado Department of Transportation
2829 West Howard Place
CDOT HQ, 3rd Floor
Denver, CO 80204
Phone: 303-757-9021 FAX: 303-757-9868
Construction Engineering Services DK

TEMPORARY EROSION CONTROL

Issued by the Project Development Branch: July 31, 2019

STANDARD PLAN NO.
M-208-1
Standard Sheet No. 3 of 11
Project Sheet Number:

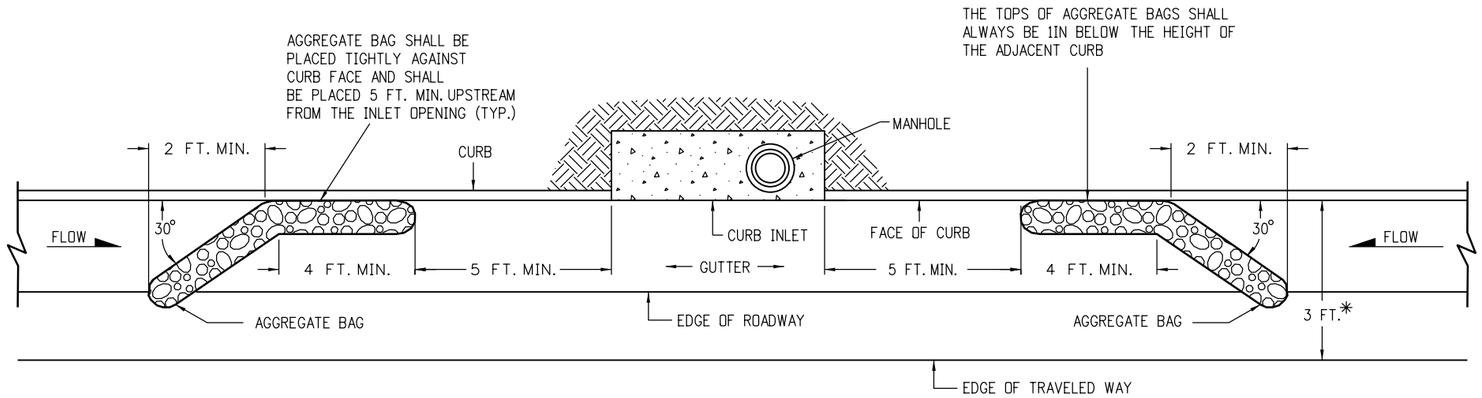

PLAN VIEW

* NOTE: USE AGGREGATE BAGS ONLY WHEN THERE IS A MINIMUM CLEARANCE OF 3 FEET FROM THE EDGE OF THE TRAVELED WAY (INCLUDING CONDITIONS DURING DETOURS) TO THE FACE OF CURB.

LENGTH (L) OF INLET FT.	NUMBER OF AGGREGATE BAGS UPSTREAM OF INLET
0 - 5	1
6 - 10	2
L > 10	3

AGGREGATE BAGS AT STORM DRAIN INLET (TYPE I)

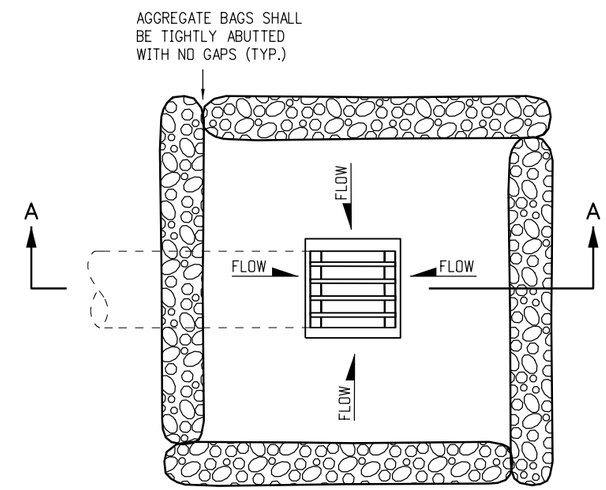

PLAN VIEW

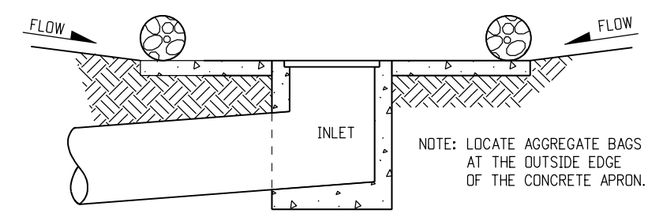

SECTION A-A

AGGREGATE BAGS AT DROP INLET

AGGREGATE BAG APPLICATIONS

NOTE: THE PAY ITEM NUMBER FOR AGGREGATE BAG (LF) IS 208-00035

Computer File Information		Sheet Revisions	
Creation Date: 07/31/19		Date:	Comments
Designer Initials: DK	R-X		
Last Modification Date: 05/16/24	R-X		
Detailer Initials: LTA	R-X		
CAD Ver.: MicroStation V8 Scale: Not to Scale Units: English	R-X		

Colorado Department of Transportation
2829 West Howard Place
CDOT HQ, 3rd Floor
Denver, CO 80204
Phone: 303-757-9021 FAX: 303-757-9868
Construction Engineering Services DK

TEMPORARY EROSION CONTROL

Issued by the Project Development Branch: July 31, 2019

STANDARD PLAN NO.
M-208-1
Standard Sheet No. 4 of 11
Project Sheet Number:

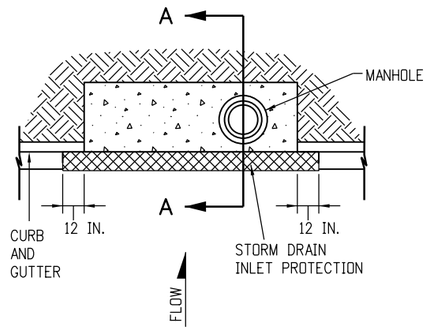

PLAN VIEW

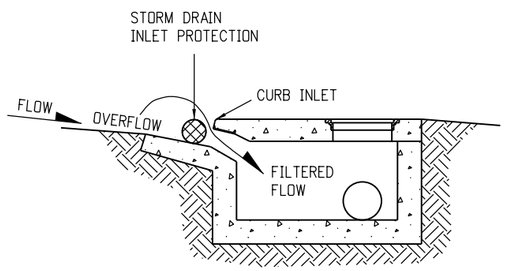

SECTION A-A

STORM DRAIN INLET PROTECTION (TYPE I)

NOTES:

1. INLET PROTECTION DEVICE SHALL EXTEND 12 INCHES PAST EACH END OF THE INLET.
2. THE PAY ITEM NUMBERS FOR STORM DRAIN INLET PROTECTION (TYPE I) ARE 208-00051 (LF), 208-00053 84 INCHES (EACH), 208-00057 144 INCHES (EACH), AND 208-00058 204 INCHES (EACH).
3. FOR STORM DRAIN INLET TYPES I AND II, IF THERE IS A MINIMUM CLEARANCE OF 3 FEET FROM THE EDGE OF THE TRAVELED WAY TO THE FACE OF CURB, USE THE AGGREGATE BAGS AT STORM DRAIN INLET (TYPE I) DETAIL ON SHEET 4 INSTEAD.

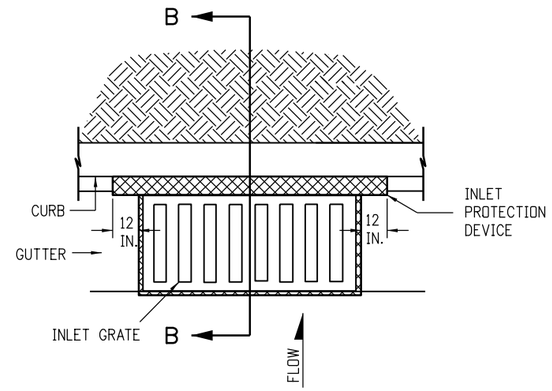

PLAN VIEW

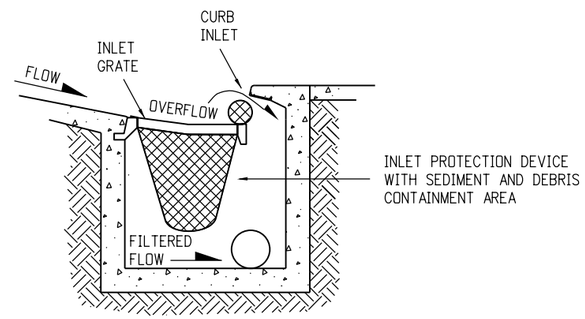

SECTION B-B

OPTION A

STORM DRAIN INLET PROTECTION (TYPE II)

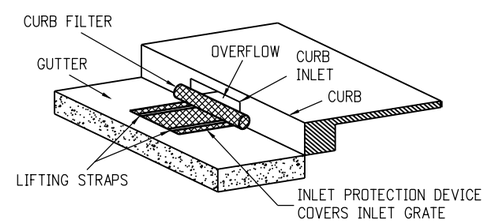

ISOMETRIC VIEW

OPTION B

STORM DRAIN INLET PROTECTION (TYPE II)

NOTE: THE PAY ITEM NUMBERS FOR STORM DRAIN INLET PROTECTION (TYPE II) ARE 208-00054 (EACH).

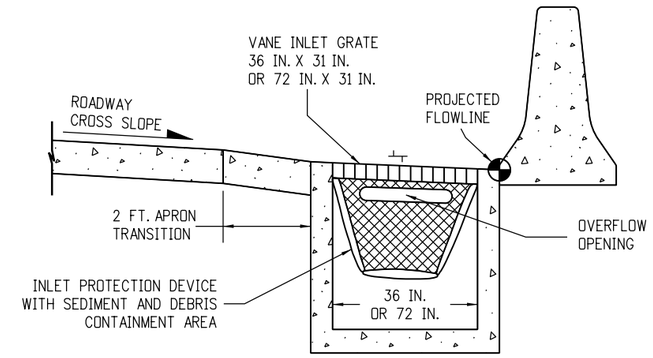

OPTION A

STORM DRAIN INLET PROTECTION (TYPE III)

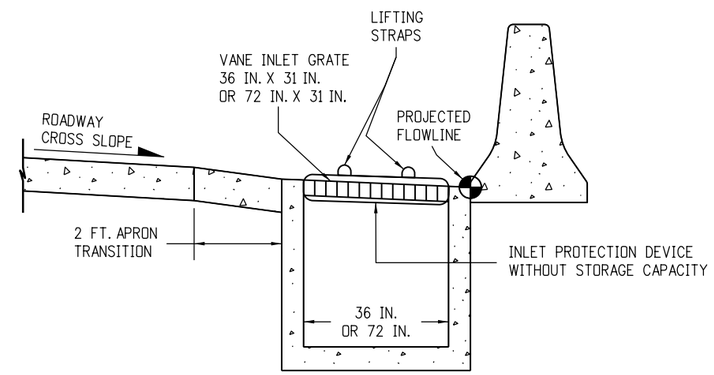

OPTION B

STORM DRAIN INLET PROTECTION (TYPE III)

NOTE: THE PAY ITEM NUMBER FOR STORM DRAIN INLET PROTECTION (TYPE III) (EACH) IS 208-00056.

STORM DRAIN INLET PROTECTION TYPES

Computer File Information		Sheet Revisions	
Creation Date: 07/31/19		Date:	Comments
Designer Initials: DK	(R-X)		
Last Modification Date: 05/16/24	(R-X)		
Detailer Initials: LTA	(R-X)		
CAD Ver.: MicroStation V8 Scale: Not to Scale Units: English	(R-X)		

Colorado Department of Transportation
2829 West Howard Place
CDOT HQ, 3rd Floor
Denver, CO 80204
Phone: 303-757-9021 FAX: 303-757-9868
Construction Engineering Services DK

TEMPORARY EROSION CONTROL

Issued by the Project Development Branch: July 31, 2019

STANDARD PLAN NO.
M-208-1
Standard Sheet No. 5 of 11
Project Sheet Number:

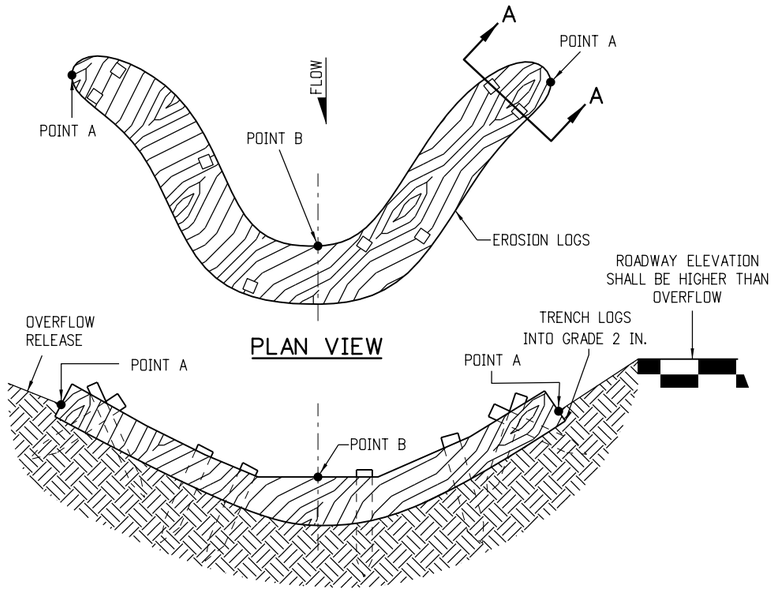

PLAN VIEW

NOTE: POINTS "A" SHALL BE A MINIMUM 4 IN. HIGHER THAN POINT "B".

ELEVATION

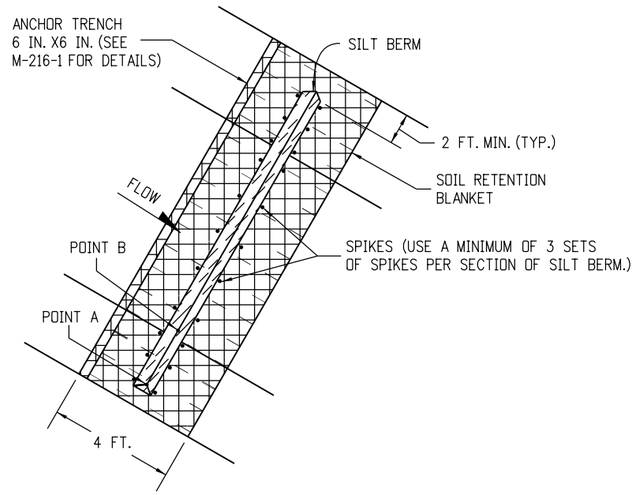

PLAN VIEW

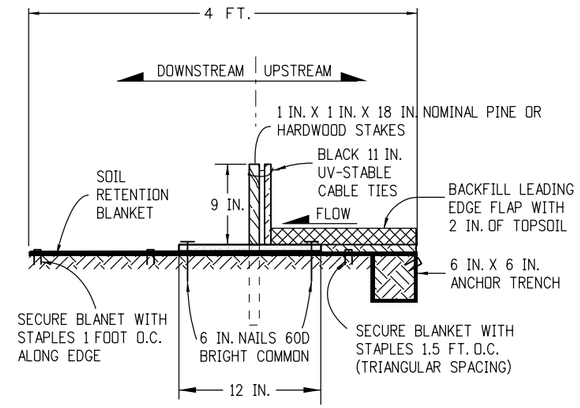

NOTES:
1. MINIMUM 4 NAILS PER SEGMENT (UPSTREAM).
2. MINIMUM 2 NAILS PER SEGMENT (DOWNSTREAM).
3. MINIMUM 2 WOOD STAKES PER SEGMENT.

SILT BERM (2) SECTION VIEW

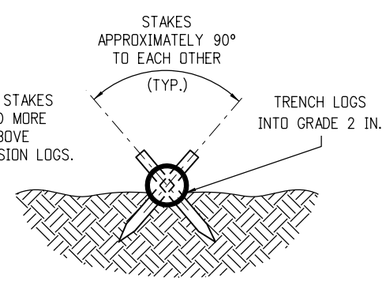

NOTE: THE TOPS OF ALL STAKES SHALL NOT EXTEND MORE THAN 2 INCHES ABOVE THE TOPS OF EROSION LOGS.

SECTION A-A

NOTES:
1. EROSION LOGS SHALL BE EMBEDDED 2 INCHES INTO THE SOIL.
2. EROSION LOGS SHALL BE TIGHTLY ABUTTED WITH NO GAPS.
3. V-SHAPED TEMPORARY DITCHES SHALL NOT BE USED. DITCHES SHAL BE GRADED IN A PARABOLIC OR TRAPEZOIDAL SHAPE.

EROSION LOG INSTALLATION

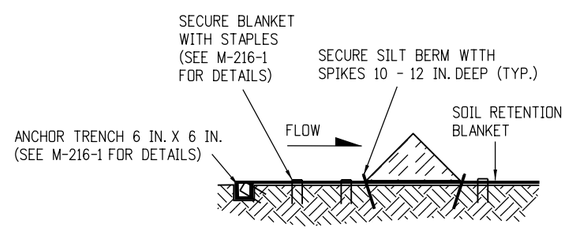

SILT BERM (1) SECTION VIEW

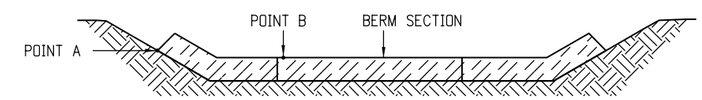

POINT "A" SHALL BE HIGHER THAN POINT "B" TO ENSURE THAT WATER FLOWS OVER THE BERM AND NOT AROUND THE ENDS.

FRONT VIEW

NOTES
1. ANCHOR SOIL RETENTION BLANKET INTO TRENCH WITH 8 INCHES MIN. STAPLES PLACED AT 1 FOOT INTERVALS ALONG EDGE.
2. FILL AND COMPACT TRENCH.
3. SECTIONS OF THE SILT BERM SHALL BE OVERLAPPED WITH NO GAPS.
4. FOR SLOPE AND CHANNEL SPACING SEE THE "SECTION VIEW ALONG DITCH FLOWLINE" DETAIL ON SHEET 11 OF 11.
5. SOIL RETENTION BLANKET SHALL ALWAYS BE REQUIRED.
6. THE PAY ITEM NUMBER FOR SILT BERM (LF) IS 208-00004.

SILT BERM INSTALLATION

DRAINAGE DITCH APPLICATIONS

Computer File Information		Sheet Revisions	
Creation Date: 07/31/19		Date:	Comments
Designer Initials: DK	(R-X)		
Last Modification Date: 05/16/24	(R-X)		
Detailer Initials: LTA	(R-X)		
CAD Ver.: MicroStation V8 Scale: Not to Scale Units: English	(R-X)		

Colorado Department of Transportation
2829 West Howard Place
CDOT HQ, 3rd Floor
Denver, CO 80204
Phone: 303-757-9021 FAX: 303-757-9868
Construction Engineering Services DK

TEMPORARY EROSION CONTROL

Issued by the Project Development Branch: July 31, 2019

STANDARD PLAN NO.
M-208-1
Standard Sheet No. 6 of 11
Project Sheet Number:

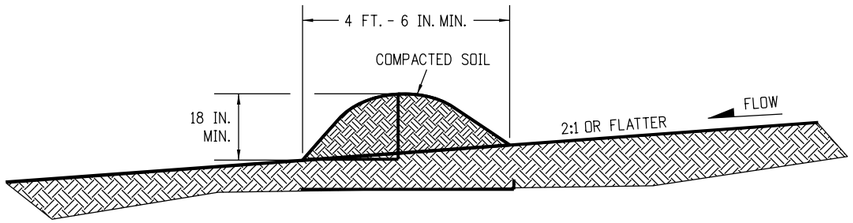

NOTES:

1. BERMS SHALL HAVE A HEIGHT OF 18 INCHES, SIDE SLOPES OF 2:1 OR FLATTER AND A MINIMUM BASE WIDTH OF 4 FT. -6 IN.
2. BERMS SHALL BE USED TO INTERCEPT AND DIVERT DRAINAGE TO A DESIGNATED OUTLET.
3. BERMS SHALL NOT BE USED WHERE DRAINAGE AREA EXCEEDS 10 ACRES.
4. BERMS SHALL BE CONSTRUCTED OUT OF ACCEPTABLE MATERIAL THAT CAN BE COMPACTED AND RECEIVE AT A MINIMUM HEAVY EQUIPMENT WHEEL ROLLED COMPACTION.
5. TEMPORARY BERMS SHALL BE CONSTRUCTED OUT OF EMBANKMENT (SUBSOIL) AND IN NO CIRCUMSTANCE CONSTRUCTED OUT OF SALVAGED TOPSOIL.
6. THE PAY ITEM NUMBER FOR TEMPORARY BERM (LF) IS 208-00300.

TEMPORARY BERM

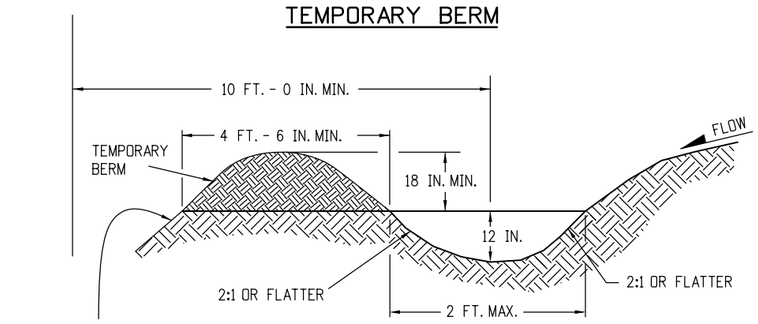

FOR BERMS TALLER THAN 2 FT., INSTALL TOE OF SLOPE CONTOL MEASURES. SEE SHEET 3 OF 11 FOR DETAILS.

NOTES:

1. TEMPORARY DIVERSION DITCHES SHALL BE CONSTRUCTED ACROSS THE SLOPE TO INTERCEPT RUNOFF AND DIRECT IT TO A STABLE OUTLET OR SEDIMENT TRAP.
2. USE THE TEMPORARY DIVERSION DITCH IMMEDIATELY ABOVE A NEW CUT, FILL SLOPE, OR AROUND THE PERIMETER OF A DISTURBED AREA.
3. THE GRADIENT ALONG THE FLOW PATH SHALL HAVE A POSITIVE GRADE TO ASSURE DRAINAGE, BUT SHALL NOT BE SO STEEP AS TO RESULT IN EROSION DUE TO HIGH VELOCITY.
4. THE DIVERSION FLOWLINE SHALL ALWAYS BE LOCATED A MINIMUM 10 FEET FROM THE OUTSIDE LIMITS OF DISTURBED AREA BOUNDARY.
6. DIVERSION BERMS SHALL BE CONSTRUCTED OUT OF EMBANKMENT (SUBSOIL) AND IN NO CIRCUMSTANCE CONSTRUCTED OUT OF SALVAGED TOPSOIL.
5. THE PAY ITEM NUMBER FOR TEMPORARY DIVERSION (LF) IS 208-00301.

TEMPORARY DIVERSION

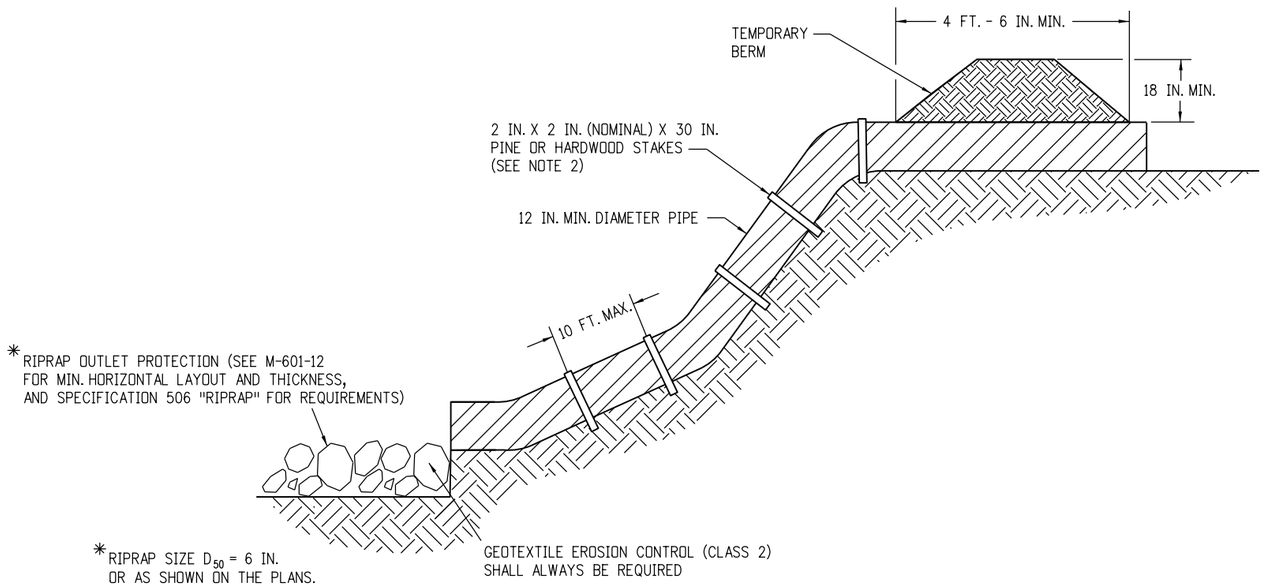

NOTES:

1. ANCHOR SIZE VARIES ACCORDING TO PIPE SIZE
2. TO SECURE THE PIPE, DRIVE STAKES INTO GROUND, THEN TIE A 12 GUAGE WIRE BETWEEN THEM ABOVE AND ACROSS THE PIPE'S WIDTH.
3. THE OUTLET SHALL BE ALIGNED WITH THE FLOW DIRECTION OF THE EXISTING GRADE. PERPENDICULAR DISCHARGE TO A CHANNEL SHALL NOT BE ACCEPTABLE.
4. THE GRADE AROUND THE INLET TO THE PIPE SHALL BE COMPACTED.
5. THE PAY ITEM NUMBER FOR TEMPORARY SLOPE DRAINS (LF) IS 208-00060.

TEMPORARY SLOPE DRAINS

GRADING APPLICATIONS

Computer File Information		Sheet Revisions	
		Date:	Comments
Creation Date: 07/31/19			
Designer Initials: DK	(R-X)		
Last Modification Date: 05/16/24	(R-X)		
Detailer Initials: LTA	(R-X)		
CAD Ver.: MicroStation V8 Scale: Not to Scale Units: English	(R-X)		

Colorado Department of Transportation
2829 West Howard Place
CDOT HQ, 3rd Floor
Denver, CO 80204
Phone: 303-757-9021 FAX: 303-757-9868
Construction Engineering Services DK

TEMPORARY EROSION CONTROL

Issued by the Project Development Branch: July 31, 2019

STANDARD PLAN NO.
M-208-1
Standard Sheet No. 7 of 11
Project Sheet Number:

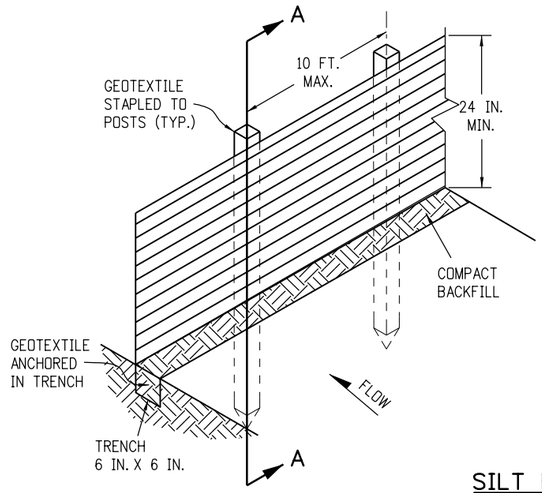

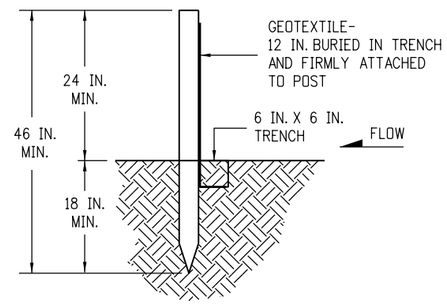

SECTION A-A

SILT FENCE

NOTES:

1. GEOTEXTILE SHALL BE ATTACHED TO WOOD POSTS WITH THREE OR MORE STAPLES PER POST. STAPLES SHALL BE HEAVY DUTY WIRE AND AT LEAST 1 INCH LONG.
2. WOOD POST SHALL BE INSTALLED PER 208.02 (b).
3. THE PAY ITEM NUMBER FOR SILT FENCE (LF) IS 208-00020.
4. THE SILT FENCE SHALL BE PLACED ON THE CONTOUR (AT THE SAME ELEVATION ±6 IN.). THE ENDS SHALL BE FLARED UP SLOPE (MINIMUM ELEVATION GAIN OF 18 IN.).

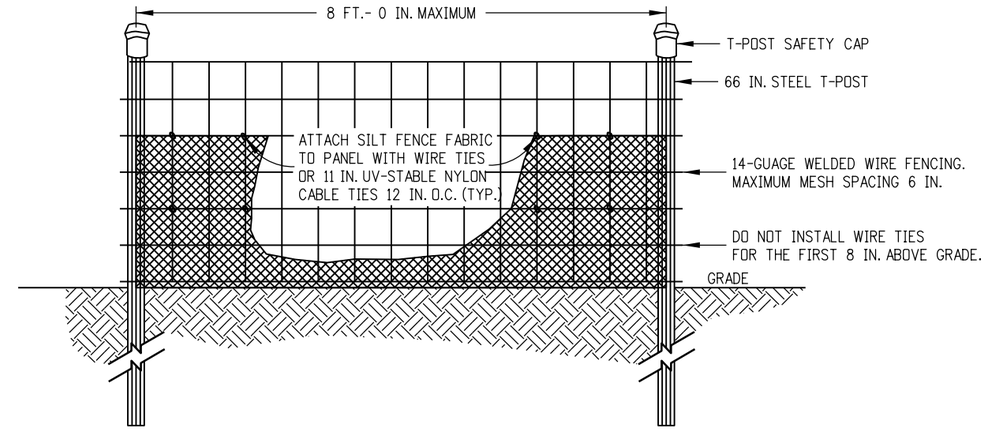

ELEVATION VIEW

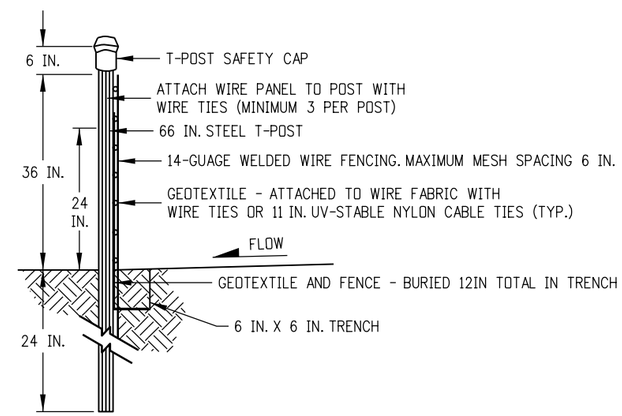

SIDE VIEW

NOTES:

1. THE ENDS OF THE SILT FENCE FABRIC SHALL BE JOINED TOGETHER BY WRAPPING APPROXIMATELY 6 INCHES OF EACH END AROUND A STEEL T-POST, THEN SECURED ALONG THE POST WITH WIRE TIES (MINIMUM 3 PER POST, AT THE TOP, MIDDLE, AND BOTTOM).
2. POSTS SHALL BE TIGHTLY ABUTTED WITH NO GAPS TO PREVENT POTENTIAL FLOW-THROUGH OF SEDIMENT AT JOINT.
3. SILT FENCES SHALL NOT BE USED FOR CHECK DAMS.
4. THE PAY ITEM NUMBER FOR SILT FENCE (REINFORCED) (LF) IS 208-00021.

SILT FENCE (REINFORCED)

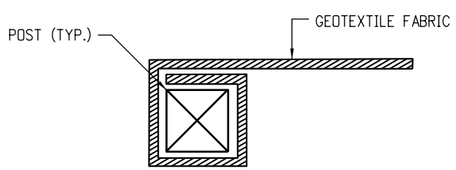

END SECTION DETAIL (PLAN VIEW)

NOTE:

1. THE END OF THE SILT FENCE FABRIC SHALL BE WRAPPED APPROX. 6 INCHES AROUND A WOODEN POST ONE FULL TURN, THEN SECURED ALONG THE POST WITH 6 HEAVY DUTY WIRE STAPLES AT LEAST 1 INCH LONG.

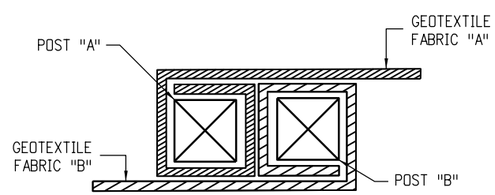

JOINING SECTION DETAIL (PLAN VIEW)

NOTES:

1. THE ENDS OF THE SILT FENCE FABRIC SHALL BE JOINED TOGETHER BY WRAPPING APPROX. 6 INCHES OF EACH END AROUND A WOODEN POST ONE FULL TURN, THEN SECURED ALONG THE POST WITH 6 HEAVY DUTY WIRE STAPLES AT LEAST 1 INCH LONG.
2. POSTS SHALL BE TIGHTLY ABUTTED WITH NO GAPS TO PREVENT POTENTIAL FLOW-THROUGH OF SEDIMENT AT JOINT.

SILT FENCE APPLICATIONS

Computer File Information	
Creation Date: 07/31/19	
Designer Initials: DK	(R-X)
Last Modification Date: 05/16/24	(R-X)
Detailer Initials: LTA	(R-X)
CAD Ver.: MicroStation V8 Scale: Not to Scale Units: English	(R-X)

Sheet Revisions	
Date:	Comments
05/16/24	Revised Silt Fence Note 2 and Silt Fence (Reinforced) Note 1.

Colorado Department of Transportation
2829 West Howard Place
CDOT HQ, 3rd Floor
Denver, CO 80204
Phone: 303-757-9021 FAX: 303-757-9868
Construction Engineering Services DK

TEMPORARY EROSION CONTROL

Issued by the Project Development Branch: July 31, 2019

STANDARD PLAN NO.
M-208-1
Standard Sheet No. 8 of 11
Project Sheet Number:

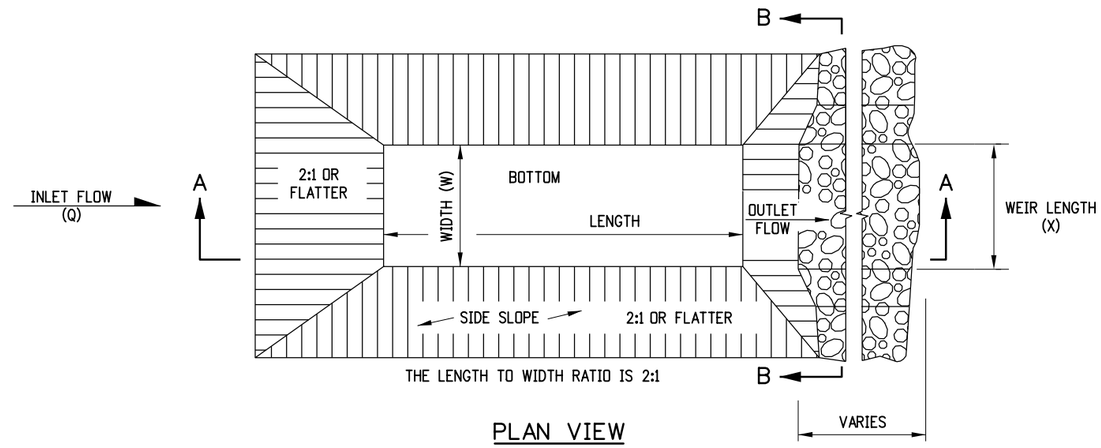

PLAN VIEW

NOTES

1. THE MAXIMUM DRAINAGE AREA IS 5 ACRES.
2. THE MAXIMUM STRUCTURE LIFE IS 2 YEARS.
3. THE STORAGE AREA IS 1800 CUBIC FEET PER ACRE.
4. THE MAXIMUM EMBANKMENT HEIGHT SHALL BE 5 FT. MEASURED ON THE DOWNSTREAM SIDE.
5. THE LENGTH/WIDTH RATIO MAY BE ADJUSTED TO MEET SITE CONDITIONS WHEN APPROVED BY THE ENGINEER.
6. WIDTH (W) OF SEDIMENT TRAP IS APPROXIMATELY EQUAL TO THE WEIR LENGTH (X).
7. SEDIMENT TRAP DESIGN SHALL BE APPROVED BY THE ENGINEER.
8. THE DOWN GRADE FROM WEIR SHALL BE STABLE AND NON-ERODIABLE.
9. THE PAY ITEM NUMBER FOR SEDIMENT TRAP (EACH) IS 208-00033.

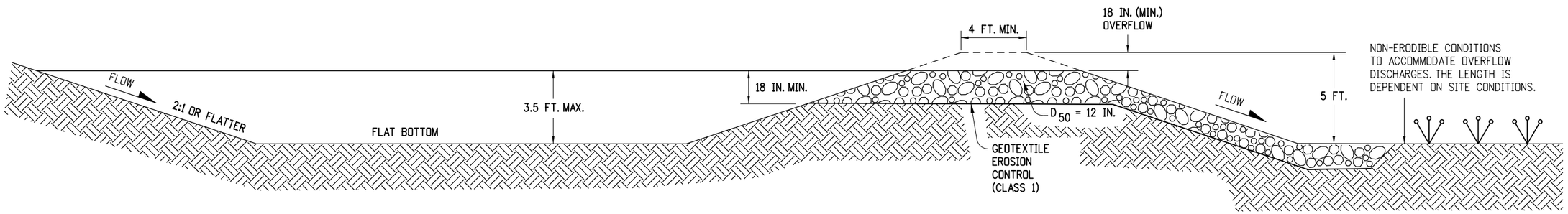

SECTION A-A

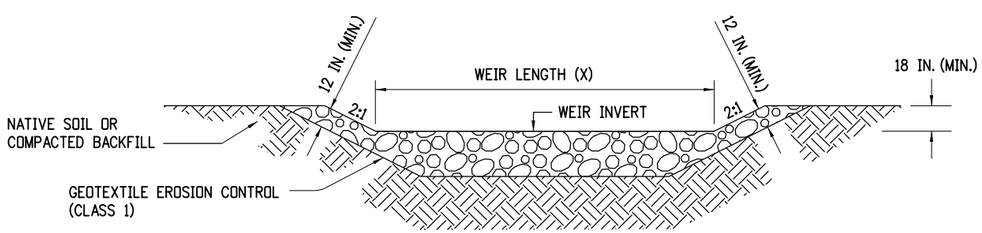

SECTION B-B

DRAINAGE AREA (ACRES)	WEIR LENGTH (FEET)
1	4
2	6
3	8
4	10
5	12

WEIR LENGTH TABLE

SEDIMENT TRAP

Computer File Information		Sheet Revisions	
Creation Date: 07/31/19		Date:	Comments
Designer Initials: DK	(R-X)	05/16/24	Revised General Note 9.
Last Modification Date: 05/16/24	(R-X)		
Detailer Initials: LTA	(R-X)		
CAD Ver.: MicroStation V8 Scale: Not to Scale Units: English	(R-X)		

Colorado Department of Transportation
2829 West Howard Place
CDOT HQ, 3rd Floor
Denver, CO 80204
Phone: 303-757-9021 FAX: 303-757-9868
Construction Engineering Services DK

TEMPORARY EROSION CONTROL

Issued by the Project Development Branch: July 31, 2019

STANDARD PLAN NO.
M-208-1
Standard Sheet No. 9 of 11
Project Sheet Number:

NOTES

1. ST-KES SH-LL BE WOOD -ND SH-LL BE 2 IN. X 2 IN. X 30 IN. NOMIN-L.
2. EROSION B-LES SH-LL BE 18 IN. X 18 IN. X 36 IN.
3. EROSION B-LES SH-LL BE ENTRENCHED 4 IN. MINIMUM INTO THE SOIL, THIGHTLY -BUTTED WITH NO G-PS, ST-KED, -ND B-CKFILLED -ROUND THE ENTIRE OUTSIDE PERIMETER.
4. EROSION B-LES C-NNOT BE USED FOR CHECK D-MS.
5. EROSION B-LE FILTER SH-LL BE LOWER TH-N BERM ELEV-TION OR USED IN - SUMP CONDITION.
6. THE P-Y ITEM NUMBER FOR EROSION B-LES (WEED FREE) (E-) IS 208-00011.

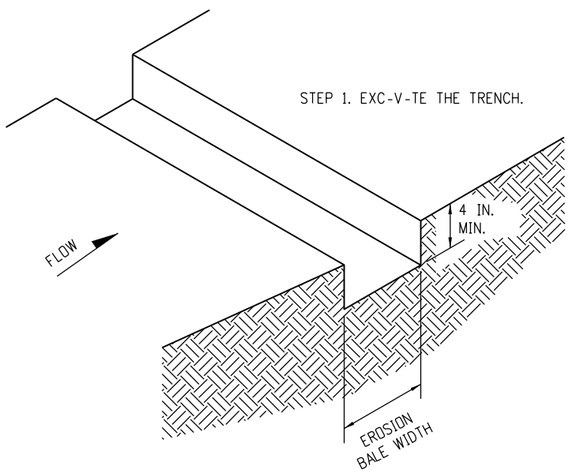

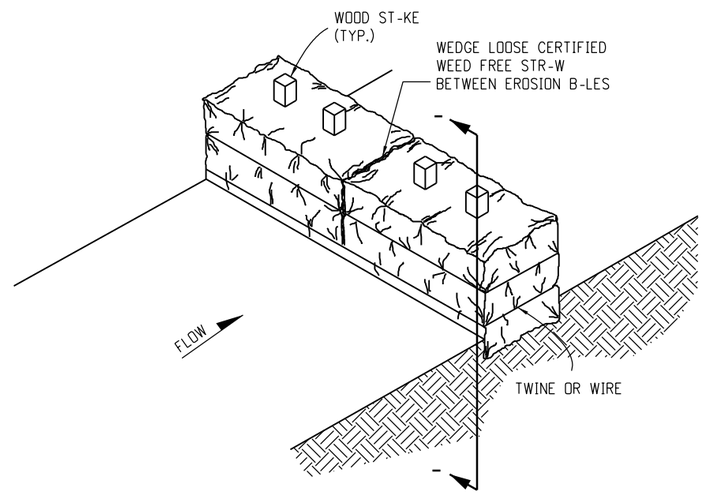

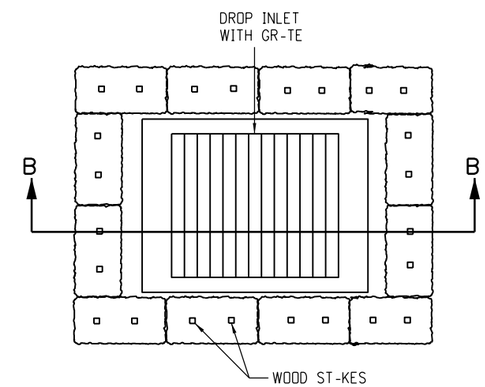

PL-N VIEW

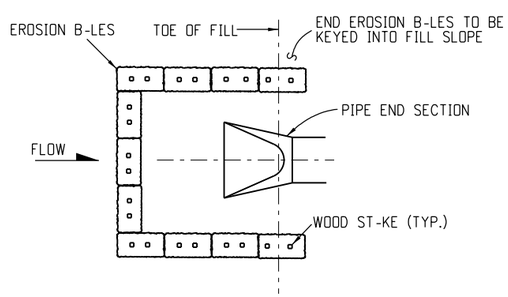

PL-N VIEW

EROSION B-LE CULVERT INLET PROTECTION

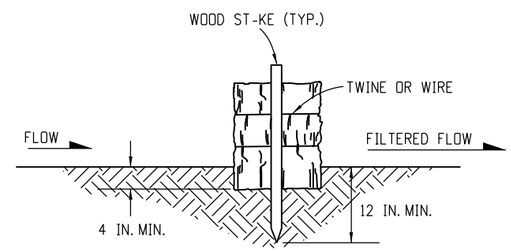

SECTION --

EROSION B-LE TRENCHING -ND ST-KING

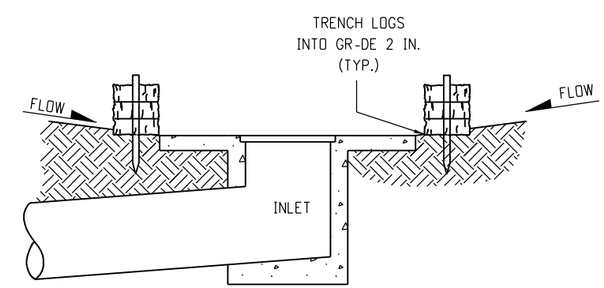

SECTION B-B

NOTE: LOC-TE EROSION B-LES -T THE OUTSIDE EDGE OF THE CONCRETE -PRON.

EROSION LOG FILTER -T DROP INLET

EROSION BALE APPLICATIONS

Computer File Information		Sheet Revisions	
Creation Date: 07/31/19		Date:	Comments
Designer Initials: DK	(R-X)		
Last Modification Date: 05/16/24	(R-X)		
Detailer Initials: LTA	(R-X)		
C-D Ver.: MicroStation V8 Scale: Not to Scale Units: English	(R-X)		

Colorado Department of Transportation
2829 West Howard Place
CDOT HQ, 3rd Floor
Denver, CO 80204
Phone: 303-757-9021 FAX: 303-757-9868
Construction Engineering Services DK

TEMPORARY EROSION CONTROL

Issued by the Project Development Branch: July 31, 2019

STANDARD PLAN NO.
M-208-1
Standard Sheet No. 10 of 11
Project Sheet Number:

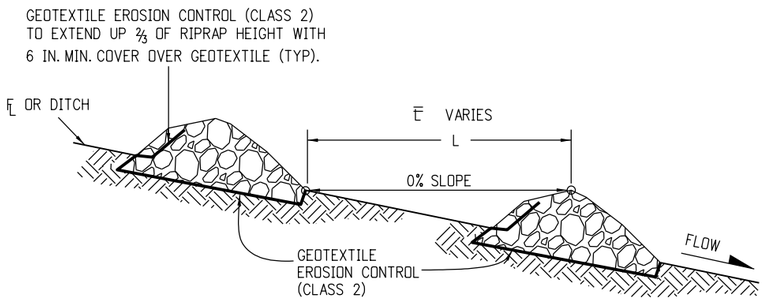

SECTION VIEW ALONG DITCH FLOWLINE

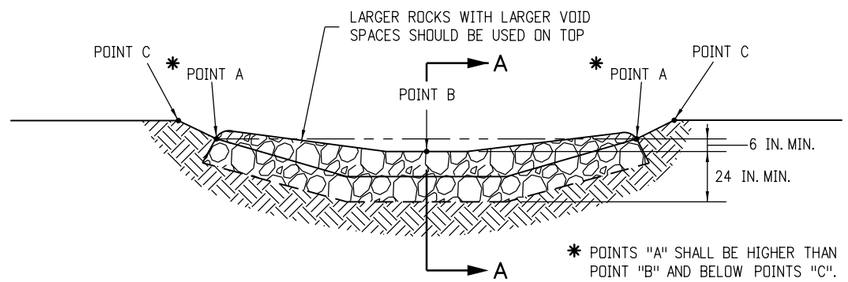

TYPICAL SECTION VIEW

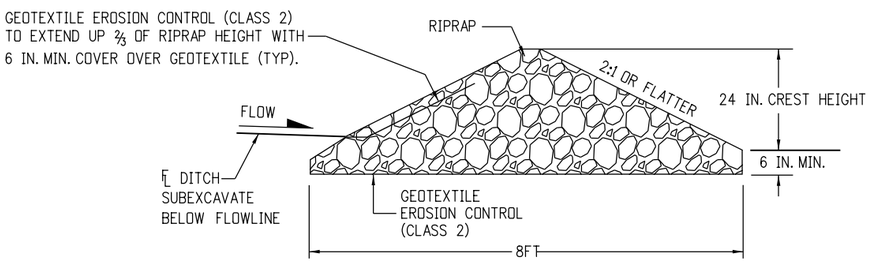

SECTION A-A

NOTES:

1. RIPRAP SIZE D_{50} = 6IN OR AS SHOWN ON THE PLANS.
2. THE GEOTEXTILE EROSION CONTROL SHALL BE CLASS 2 AND CONFORM TO THE REQUIREMENTS OF SUBSECTION 712.08.
3. THE ENDS OF RIPRAP CHECK DAM SHALL BE A MINIMUM OF 6 IN. HIGHER THAN CENTER OF CHECK DAM.
4. FOR USE AS TEMPORARY CHECK DAMS ONLY AND NOT FOR PERMANENT INSTALLATIONS.
5. THE PAY ITEM NUMBER FOR ROCK CHECK DAM (EA) IS 208-00041.

NOTE: ALL MATERIALS AND LABOR TO COMPLETE THE ROCK CHECK DAM SHALL BE INCLUDED IN THE COST OF WORK.

ROCK CHECK DAM

Computer File Information		Sheet Revisions	
Creation Date: 07/31/19		Date:	Comments
Designer Initials: DK	(R-X)		
Last Modification Date: 05/16/24	(R-X)		
Detailer Initials: LTA	(R-X)		
CAD Ver.: MicroStation V8 Scale: Not to Scale Units: English	(R-X)		

Colorado Department of Transportation
2829 West Howard Place
CDOT HQ, 3rd Floor
Denver, CO 80204
Phone: 303-757-9021 FAX: 303-757-9868
Construction Engineering Services DK

TEMPORARY EROSION CONTROL

Issued by the Project Development Branch: July 31, 2019

STANDARD PLAN NO.
M-208-1
Standard Sheet No. 11 of 11
Project Sheet Number:

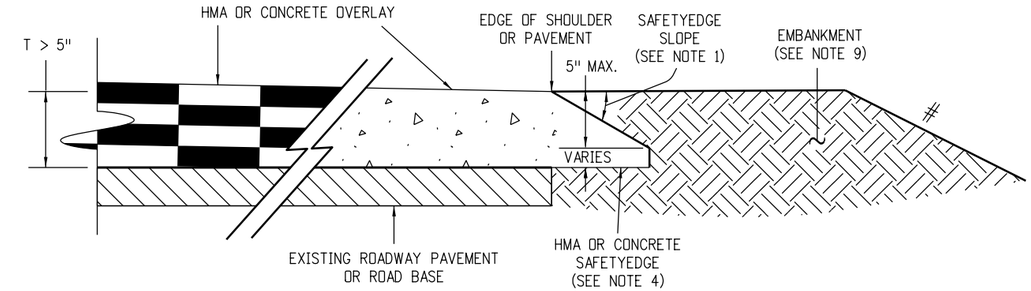

SAFETYEDGE DETAIL FOR HOT MIX ASPHALT OR CONCRETE RESURFACING
GREATER THAN 5 INCHES

T - TOTAL THICKNESS OF PAVEMENT

- SEE APPROPRIATE TYPICAL SECTION DETAIL IN PLANS FOR ROADSIDE DETAILS.

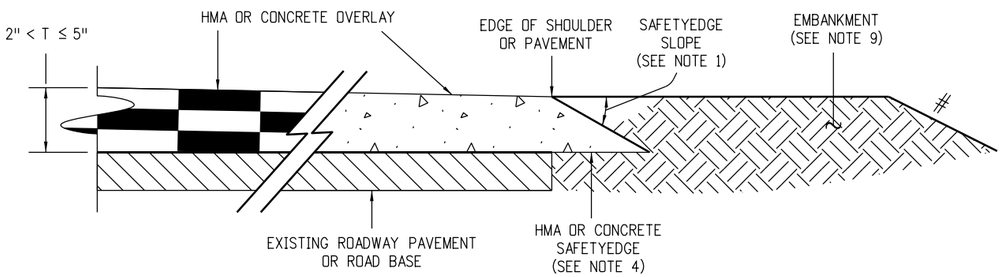

SAFETYEDGE DETAIL FOR HOT MIX ASPHALT OR CONCRETE RESURFACING
LESS THAN OR EQUAL TO 5 INCHES

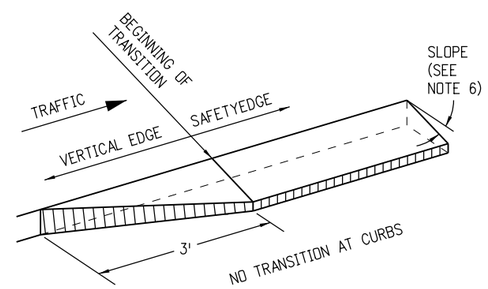

TRANSITION DETAIL
FOR CONCRETE ONLY

GENERAL NOTES

1. THE SAFETYEDGE SHALL HAVE A SLOPE OF 32° (1V:1.6H) RELATIVE TO THE PAVEMENT CROSS SLOPE WITH AN ACCEPTABLE RISE TO RUN RANGE BETWEEN 27° (1V:1.9H) AND 37° (1H:1.3V).
2. CONSTRUCTION OF THE SAFETYEDGE SHALL NOT RESULT IN A DECREASE OF PAVED SHOULDER OR LANE WIDTH.
3. THE SAFETYEDGE SHALL BE CONSTRUCTED MONOLITHICALLY WITH THE ADJACENT LANE OR SHOULDER, AND SHAPED AND COMPACTED WITH A DEVICE ATTACHED TO THE PAVER. THE DEVICE MUST PRODUCE A UNIFORM SURFACE TEXTURE WITHOUT TEARING, SHOVING, OR GOUGING, AND MUST NOT LEAVE MARKS SUCH AS RIDGES AND INDENTATIONS. THE DEVICE MUST BE CAPABLE OF TRANSITION TO CROSSROADS, DRIVEWAYS, AND OBSTRUCTIONS.
4. THE EDGE OF THE ROADWAY, WHERE THE SAFETYEDGE TREATMENT IS TO BE PLACED, MUST HAVE A SOLID BASE, FREE OF DEBRIS SUCH AS: LOOSE MATERIAL, GRASS, WEEDS, OR MUD. GRADE AREAS ON WHICH THE SAFETYEDGE IS TO BE PLACED AS REQUIRED.
5. IN AREAS THAT DO NOT REQUIRE SAFETYEDGE, IT IS ACCEPTABLE TO SAW CUT AND REMOVE THE SAFETYEDGE AFTER PAVING OPERATIONS ARE COMPLETED OR TO CONSTRUCT A FORMED "BOX-OUT" TO PREVENT PLACEMENT DURING PAVING.
6. IN LOCATIONS WHERE A TRANSITION FROM A SAFETYEDGE SECTION TO A NON-SAFETYEDGE SECTION EXISTS, A TRANSITION SHALL BE CONSTRUCTED TO AVOID A VERTICAL EDGE PERPENDICULAR TO TRAFFIC. TRANSITIONS SHALL BE INCLUDED IN THE COST OF THE SAFETYEDGE WORK.
7. WITH THE APPROVAL OF THE ENGINEER, IN AREAS WHERE IT IS NOT POSSIBLE TO PLACE THE SAFETYEDGE IN CONJUNCTION WITH MAINLINE PAVING OPERATIONS, SHORT SECTIONS OF HANDWORK SHALL BE ALLOWED WHEN NECESSARY FOR TRANSITIONS AND TURNOUTS.
8. SITE PREPARATION AND ADDITIONAL EARTHWORK REQUIRED TO CONSTRUCT THE SAFETYEDGE SHALL NOT BE PAID FOR SEPARATELY BUT SHALL BE INCLUDED IN THE WORK.
9. AFTER SAFETYEDGE HAS BEEN PLACED, THE SHOULDER OR EMBANKMENT MATERIAL SHALL BE GRADED BACK FLUSH WITH THE PAVED LANE OR SHOULDER FACE.
10. THE SAFETYEDGE SHALL NOT BE USED WHERE THE FORESLOPE/EMBANKMENT OR THE GROUND SURFACE HAS A STEEPER SLOPE THAN THE SLOPE OF THE SAFETYEDGE.

ADDITIONAL QUANTITIES REQUIRED FOR SAFETYEDGE*

CASE	PAVEMENT THICKNESS	HMA TONS**/SIDE/LF	HMA TONS**/SIDE/MILE	CONCRETE CY/SIDE/LF	CONCRETE CY/SIDE/MILE
T≤5"	2"	0.002	9.3	NA	NA
	3"	0.004	20.9	NA	NA
	4"	0.007	37.2	0.003	17.0
	5"	0.011	58.2	0.005	29.7
T>5"	6"	0.015	81.4	0.008	41.6
	7"	0.020	104.7	0.010	53.5
	8"	0.024	127.9	0.012	65.4
	9"	0.029	151.2	0.015	77.2
	10"	0.033	174.5	0.017	89.1
	11"	0.037	197.7	0.019	101.0
	12"	0.042	221.0	0.021	112.9
	13"	0.046	244.2	0.024	124.8
	14"	0.051	267.5	0.026	136.7
	15"	0.055	290.8	0.028	148.5
	16"	0.059	314.0	0.030	160.4

* FOR INFORMATION ONLY. ** ASSUME HMA DENSITY IS EQUAL TO 145 LBS PER CUBIC FOOT.

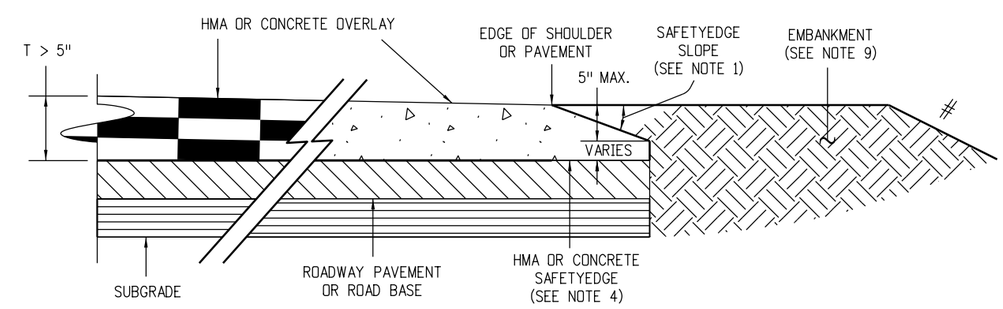

SAFETYEDGE DETAIL FOR NEW CONSTRUCTION, WIDENING, AND RECONSTRUCTION
GREATER THAN 5 INCHES

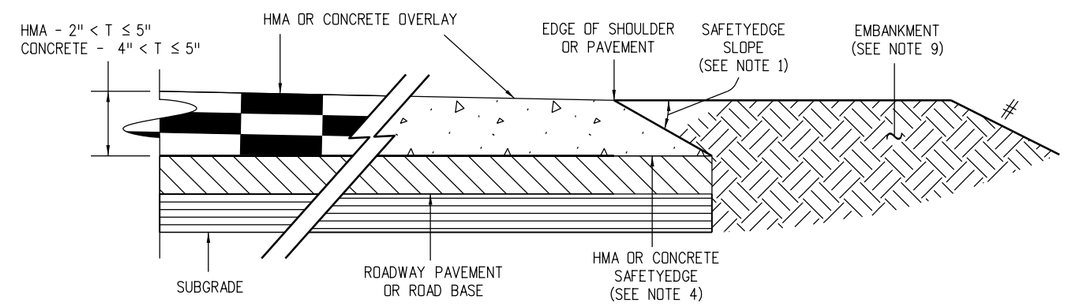

SAFETYEDGE DETAIL FOR NEW CONSTRUCTION, WIDENING, AND RECONSTRUCTION
LESS THAN OR EQUAL TO 5 INCHES

Computer File Information		Sheet Revisions	
Creation Date: 07/31/19		Date:	Comments
Designer Initials: DLK	(R-X)	12/12/24	New M Standard Plan Sheet.
Last Modification Date: 12/12/24	(R-X)		
Detailer Initials: LTA	(R-X)		
CAD Ver.: MicroStation V8 Scale: Not to Scale Units: English	(R-X)		

Colorado Department of Transportation
2829 West Howard Place
CDOT HQ, 3rd Floor
Denver, CO 80204
Phone: 303-757-9021 FAX: 303-757-9868
Construction Engineering Services DLK

SAFETYEDGE FOR PAVEMENT

Issued by the Project Development Branch: July 31, 2019

STANDARD PLAN NO.
M-400-1
Standard Sheet No. 1 of 1
Project Sheet Number:

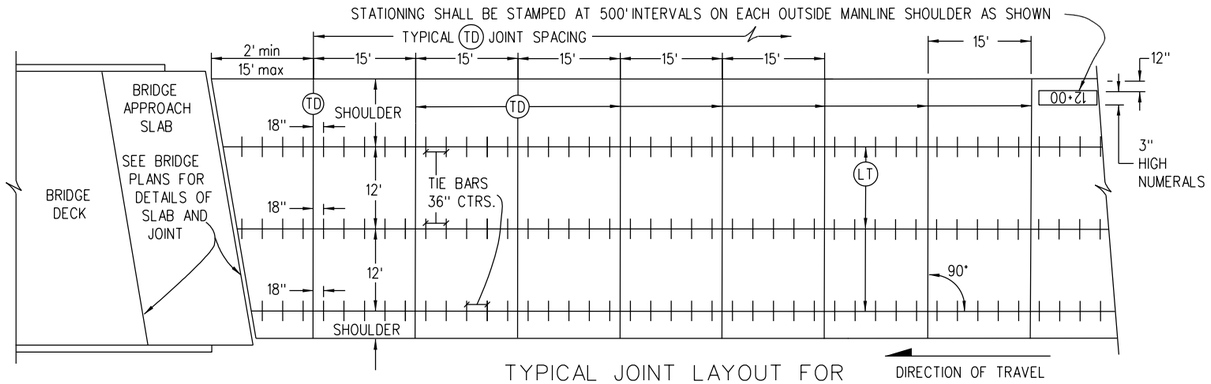

TYPICAL JOINT LAYOUT FOR CONCRETE ROADWAY WITH CONCRETE SHOULDERS

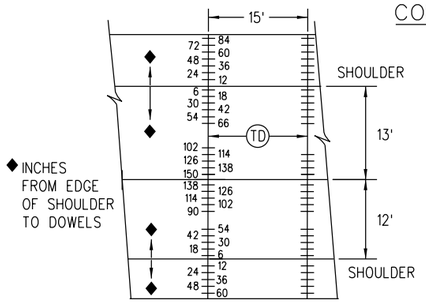

DOWEL BAR DETAIL FOR (TD) JOINT WITH 13 FT. AND 12 FT. WIDE SLABS

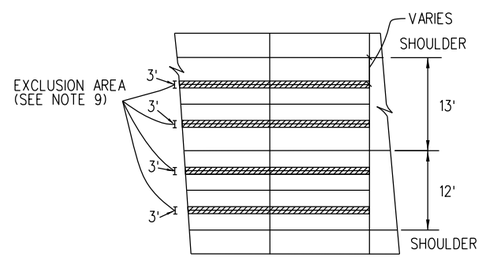

JOINT EXCLUSION AREA FOR WHEEL PATH

GENERAL NOTES

1. THIS STANDARD PLAN DOES NOT APPLY TO THIN CONCRETE OVERLAYS (WHITETOPPING).
2. LONGITUDINAL JOINT SHALL BE PLACED ADJACENT TO LANE MARKINGS WHEN POSSIBLE AND HAVE A MAXIMUM SPACING OF 13 FT.
3. THIS JOINT LAYOUT SHALL BE USED AS A STANDARD OF THE JOINT LAYOUT FOR THE PROJECT. IF THE CONTRACTOR PROPOSES VARIATIONS FROM THIS STANDARD OR THE PROJECT HAS UNUSUAL OR IRREGULAR CONDITIONS NOT COVERED HEREIN, THE CONTRACTOR SHALL PREPARE A PAVEMENT JOINT LAYOUT FOR APPROVAL BY THE ENGINEER. SLABS 13 FEET IN WIDTH SHALL BE CONSTRUCTED ONLY WHERE DESIGNATED ON THE PLANS.
4. ON MULTILANE DIVIDED HIGHWAYS, THE MULTILANE DIRECTIONAL PAVEMENT AND BOTH SHOULDERS SHALL BE PLACED WITH (LT) LONGITUDINAL CONTRACTION JOINTS.
5. ON MULTILANE DIVIDED HIGHWAYS SEPARATED BY A CONCRETE BARRIER, A (UT) JOINT SHALL BE CONSTRUCTED AT ONE OF THE BARRIER FACES.
6. (UT) JOINTS SHALL BE CONSTRUCTED BETWEEN THE TWO OPPOSING DIRECTIONS OF TRAVEL ON A MULTILANE UNDIVIDED HIGHWAY WHEN ALL OF THE FOLLOWING APPLY:
   A. PAVEMENT IS CONTINUOUS ACROSS BOTH DIRECTIONS OF TRAVEL.
   B. THERE IS NO MEDIAN BARRIER.
   C. THE WIDTH OF THE PAVEMENT IN ONE DIRECTION IS GREATER THAN 80 FEET.
7. ON VARIABLE WIDTH SLABS, THE 2 FEET OR 4 FEET END OF SLAB WIDTH DIMENSION MAY VARY ±6 INCHES.
8. ON GORE PANEL WIDTHS LESS THAN 6 FEET TIE BARS SHALL BE ELIMINATED ON THE SIDE ADJACENT TO THE RAMP.
9. NO JOINTS SHALL BE PLACED WITHIN 1.5 FEET OF EITHER SIDE OF THE CENTER OF THE WHEEL PATH. WHEELPATH IS DEFINED PER SUBSECTION 101.02.
10. THE TICK MARKS FOR TIE BAR LINE TYPE ARE FOR ILLUSTRATIVE PURPOSES ONLY AND DO NOT REPRESENT ACTUAL TIE BAR LOCATIONS. SEE M-412-1 SHEET 5 OF 9 FOR TIE BAR PLACEMENT LOCATIONS.
11. IF A JONT IS NOT CONTINUOUS INTO AN ADJACENT SLAB, A JOINT TERMINATION CORE (SEE SHEET 5) SHALL BE CONSTRUCTED USING 4 INCH PVC PIPE FILLED WITH AN APPROVED NON-SHRINK GROUT OR BOND BREAKER FILLED WITH AN APPROVED NON-SHRINK GROUT.

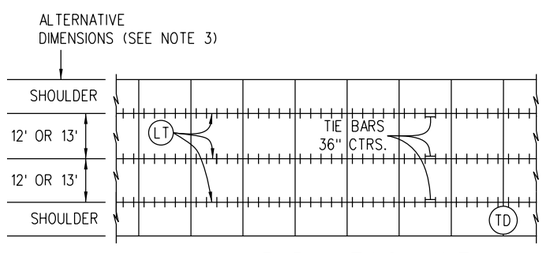

RURAL TWO-LANE

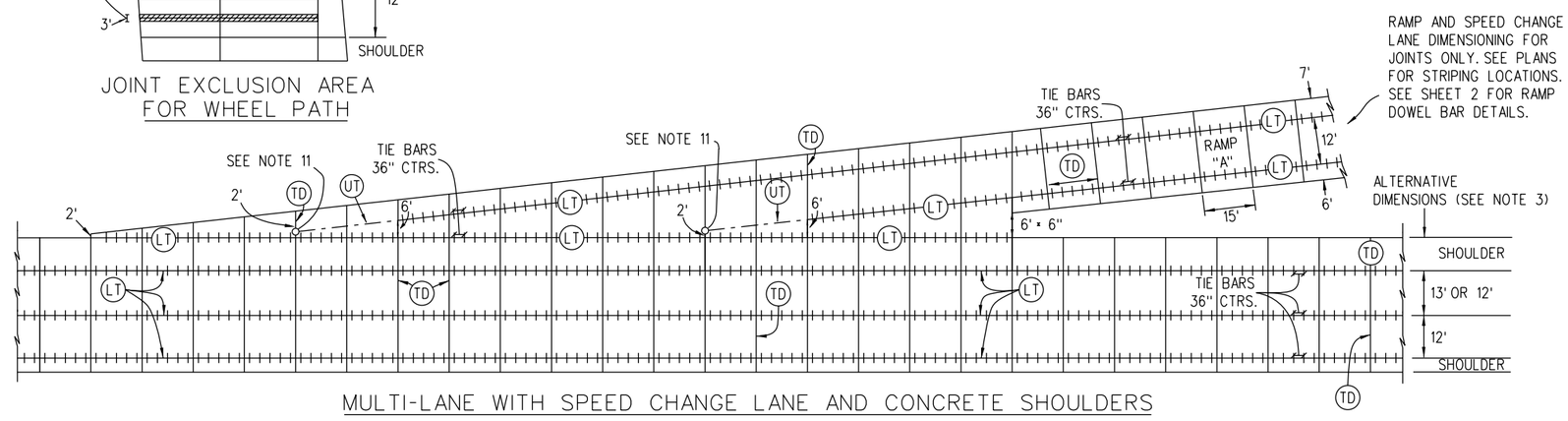

MULTI-LANE WITH SPEED CHANGE LANE AND CONCRETE SHOULDERS

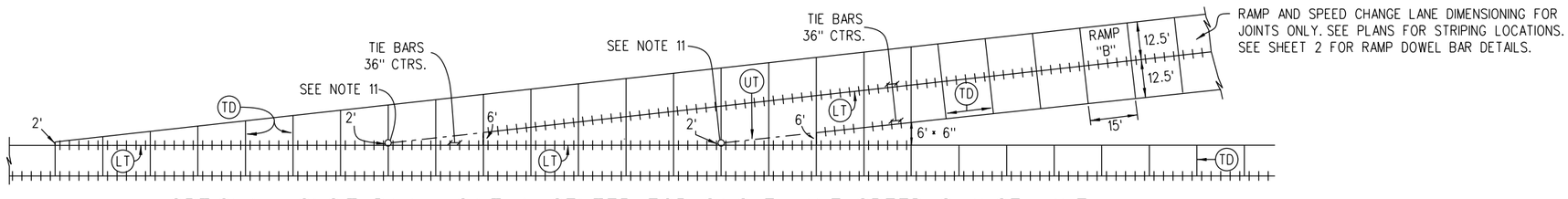

OPTIONAL LONGITUDINAL JOINT IN CENTER FOR SINGLE LANE SPEED CHANGE LANE

JOINT LEGEND

(SEE SHEET 5 FOR JOINT DETAILS)

- (TD) TRANSVERSE DOWELED
- (UT) UNTIED
- (LT) LONGITUDINAL TIED

Computer File Information		Sheet Revisions	
Creation Date: 07/31/19		Date:	Comments
Designer Initials: JBK	(R-X)	01/31/22	Revised all sheets.
Last Modification Date: 01/31/22	(R-X)		
Detailer Initials: LTA/HMG	(R-X)		
CAD Ver.: MicroStation V8 Scale: Not to Scale Units: English	(R-X)		

Colorado Department of Transportation
2829 West Howard Place
CDOT HQ, 3rd Floor
Denver, CO 80204
Phone: 303-757-9021 FAX: 303-757-9868
Construction Engineering Services JBK

CONCRETE PAVEMENT JOINTS

Issued by the Project Development Branch: July 31, 2019

STANDARD PLAN NO.
M-412-1
Standard Sheet No. 1 of 9
Project Sheet Number:

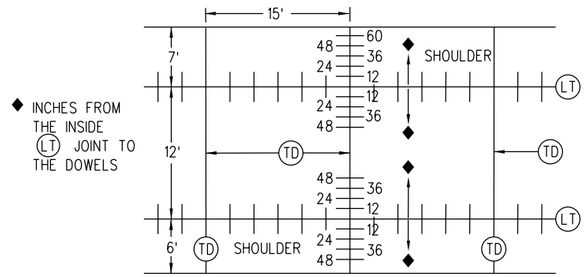

RAMP "A" DOWEL BAR DETAIL
FOR (TD) JOINT WITH A 12 FT. LANE

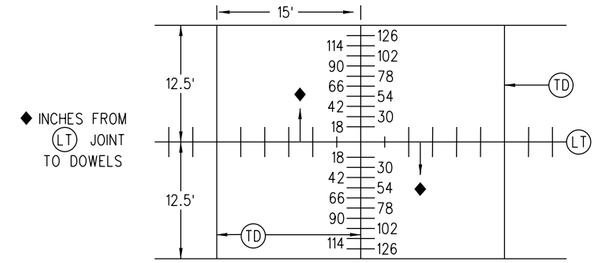

RAMP "B" DOWEL BAR DETAIL FOR (TD) JOINT
WITH CENTER LONGITUDINAL SPLIT LANE

JOINT LEGEND
(SEE SHEET 5 FOR JOINT DET-ILS)

- (TD) TR-NSVERSE DOWELED
- (UT) UNTIED
- (LT) LONGITUDIN-L TIED

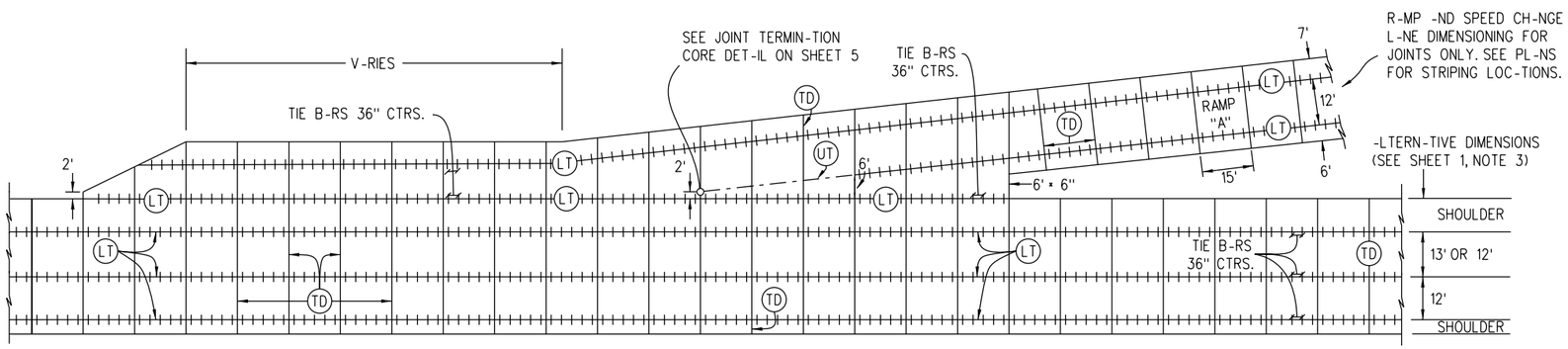

MULTI-LANE WITH ACCELERATION AND DECELERATION LANES AND CONCRETE SHOULDERS

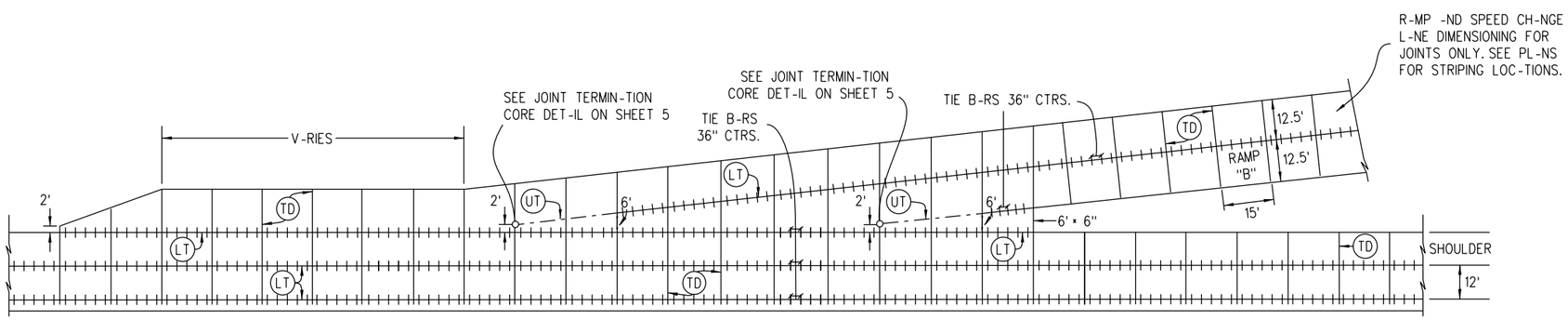

OPTIONAL LONGITUDINAL JOINT IN CENTER FOR SINGLE LANE ACCELERATION AND DECELERATION LANE

Computer File Information		Sheet Revisions	
Creation Date: 07/31/19		Date:	Comments
Designer Initials: JBK	(R-X)	01/31/22	Revised all sheets.
Last Modification Date: 01/31/22	(R-X)		
Detailer Initials: LTA/HMG	(R-X)		
C-D Ver.: MicroStation V8 Scale: Not to Scale Units: English	(R-X)		

Colorado Department of Transportation
2829 West Howard Place
CDOT HQ, 3rd Floor
Denver, CO 80204
Phone: 303-757-9021 FAX: 303-757-9868
Construction Engineering Services JBK

CONCRETE PAVEMENT JOINTS

Issued by the Project Development Branch: July 31, 2019

STANDARD PLAN NO.
M-412-1
Standard Sheet No. 2 of 9
Project Sheet Number:

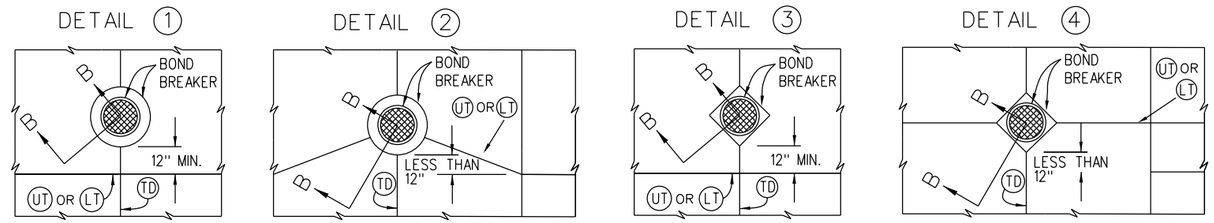

INLET OR MANHOLE CAST IN PAVEMENT

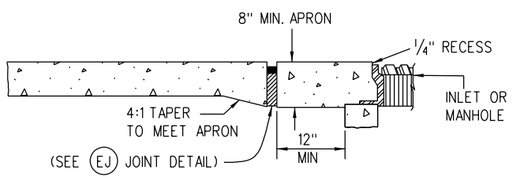

SECTION A-A

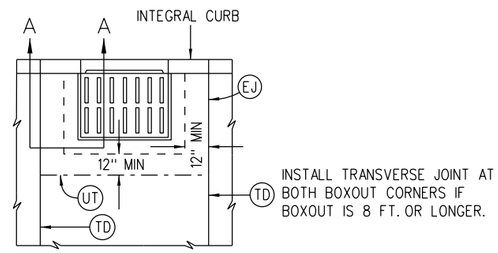

CURB INLET BOXOUT

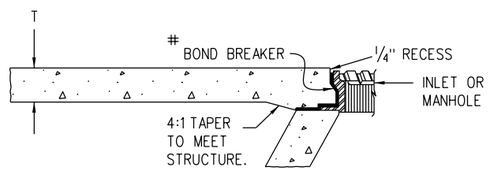

BOND BREAKER SHALL BE COMPOSED OF PLASTIC SHEET, BUILDING PAPER OR OTHER APPROVED MATERIAL THAT PREVENTS BONDING.

SECTION B-B

NOTES

1. LONGITUDINAL JOINTS SHALL BE PLACED ADJACENT TO LANE MARKINGS WHEN POSSIBLE AND HAVE A MAXIMUM SPACING OF 13 FEET (15 FEET IS PERMITTED WITH MONOLITHIC CURB AND GUTTER).
2. CONSTRUCT TRANSVERSE JOINTS PERPENDICULAR TO THE CENTERLINE OF PAVEMENT AND EXTEND THROUGH THE CURB OR CURB AND GUTTER.
3. * PLACE 1/2 INCH MINIMUM EXPANSION JOINT FILLER IN FULL DEPTH CURB JOINT AT INTERSECTION RETURN RADIUS POINTS.
4. THE CONTRACTOR SHALL, UNLESS OTHERWISE SHOWN ON THE PLANS, SELECT AND USE A BOND BREAKER AT INLETS, MANHOLES AND SIMILAR SIZE STRUCTURES. SMALLER STRUCTURES SUCH AS VALVE AND MONUMENT BOXES SHALL NOT REQUIRE A BOND BREAKER.
5. WHERE A LONGITUDINAL JOINT PASSES LESS THAN 1 FOOT FROM A CAST-IN-PAVEMENT MANHOLE OR SIMILAR SIZE STRUCTURE, INSTALL JOINT AS SHOWN IN DETAILS 1 THROUGH 4.
6. TRANSVERSE JOINTS SHALL EITHER INTERSECT THE CENTER OF CIRCULAR MANHOLES AND INLETS OR BE AT LEAST 4 FEET AWAY FROM THE EDGE OF CIRCULAR MANHOLES. SEE CURB INLET BOXOUT DETAIL.
7. WHEN THE SHORT RUN OF THE TRANSVERSE JOINT IS LESS THAN THREE FEET WIDE, ELIMINATE DOWELS.
8. THE TICK MARKS FOR TIE BAR LINE TYPE ARE FOR ILLUSTRATIVE PURPOSES ONLY AND DO NOT REPRESENT ACTUAL TIE BAR LOCATIONS. SEE M-412-1 SHEET 5 OF 9 FOR TIE BAR PLACEMENT LOCATIONS.
9. IF A JONT IS NOT CONTINUOUS INTO AN ADJACENT SLAB, A JOINT TERMINATION CORE (SEE SHEET 5) SHALL BE CONSTRUCTED USING 4" PVC PIPE FILLED WITH AN APPROVED NON-SHRINK GROUT OR BOND BREAKER FILLED WITH AN APPROVED NON-SHRINK GROUT.

JOINT LEGEND

(SEE SHEET 5 FOR JOINT DETAILS)

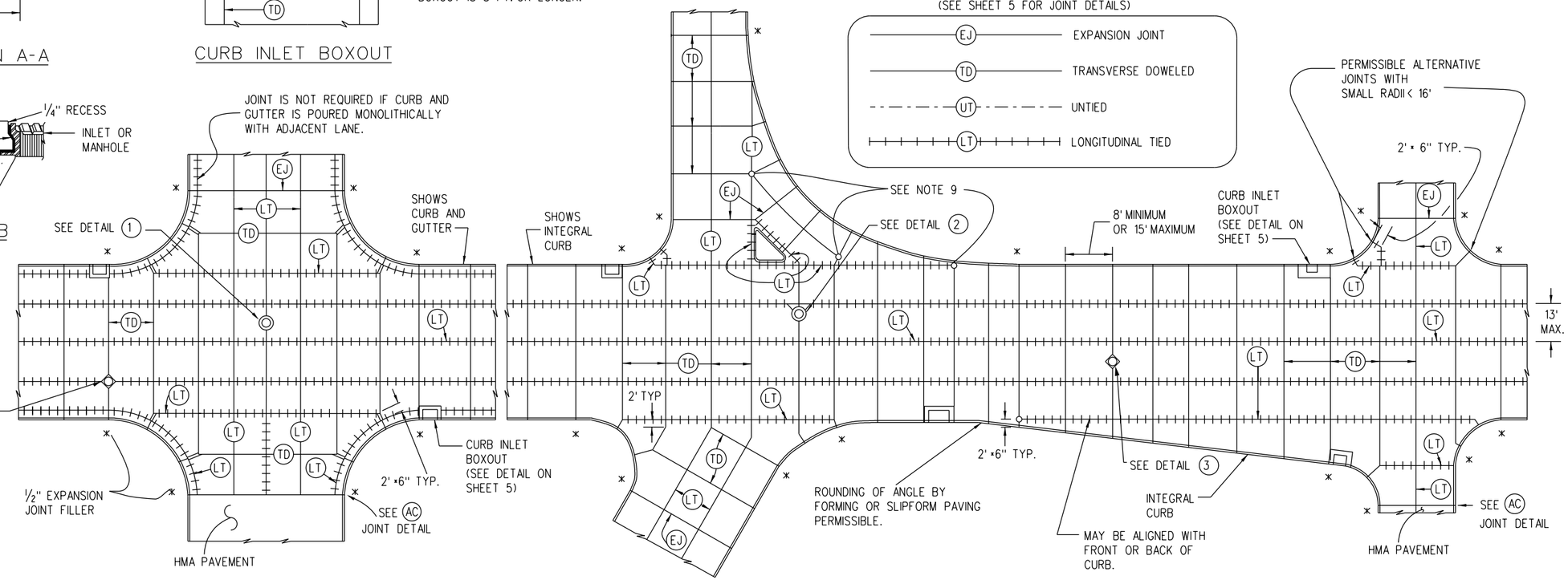

TYPICAL CURBED PAVEMENT JOINT LAYOUT

Computer File Information		Sheet Revisions	
Creation Date: 07/31/19		Date:	Comments
Designer Initials: JBK	(R-X)	01/31/22	Revised all sheets.
Last Modification Date: 01/31/22	(R-X)		
Detailer Initials: LTA/HMG	(R-X)		
CAD Ver.: MicroStation V8 Scale: Not to Scale Units: English	(R-X)		

Colorado Department of Transportation
2829 West Howard Place
CDOT HQ, 3rd Floor
Denver, CO 80204
Phone: 303-757-9021 FAX: 303-757-9868
Construction Engineering Services JBK

CONCRETE PAVEMENT JOINTS

Issued by the Project Development Branch: July 31, 2019

STANDARD PLAN NO.
M-412-1
Standard Sheet No. 3 of 9
Project Sheet Number:

NOTES

1. LONGITUDINAL JOINTS SHALL BE PLACED ADJACENT TO LANE MARKINGS WHEN POSSIBLE AND HAVE A MAXIMUM SPACING OF 13 FEET (15 FEET IS PERMITTED WITH MONOLITHIC CURB AND GUTTER).
2. CONSTRUCT TRANSVERSE JOINTS PERPENDICULAR TO THE CENTERLINE OF PAVEMENT AND EXTEND THROUGH THE CURB OR CURB AND GUTTER.
3. * PLACE 1/2 INCH MINIMUM EXPANSION JOINT FILLER IN FULL DEPTH OF CURB JOINT AT INTERSECTION RETURN RADIUS POINTS.
4. THE CONTRACTOR SHALL, UNLESS OTHERWISE SHOWN ON THE PLANS, SELECT AND USE A BOND BREAKER AT INLETS, MANHOLES, AND SIMILAR SIZE STRUCTURES. SMALLER STRUCTURES SUCH AS VALVE AND MONUMENT BOXES DO NOT REQUIRE A BOND BREAKER.
5. WHERE A LONGITUDINAL JOINT WOULD PASS LESS THAN 1 FOOT FROM A CAST-IN-PAVEMENT MANHOLE OR SIMILAR SIZE STRUCTURE, CONSTRUCT JOINT AS SHOWN IN DETAILS 1 AND 2 ON PAGE 3.
6. TRANSVERSE JOINTS SHALL EITHER INTERSECT THE CENTER OF CIRCULAR MANHOLES AND INLETS OR BE AT LEAST 4 FEET AWAY FROM THE EDGE OF CIRCULAR MANHOLES. SEE CURB INLET BOXOUT DETAIL ON SHEET 3.
7. WHEN THE SHORT RUN OF THE TRANSVERSE JOINT IS LESS THAN THREE FEET WIDE, ELIMINATE THE DOWELS.
8. ON GORE PANEL WIDTHS LESS THAN 6 FEET, TIE BARS SHALL BE ELIMINATED.
9. THE TICK MARKS FOR TIE BAR LINE TYPE ARE FOR ILLUSTRATIVE PURPOSES ONLY AND DO NOT REPRESENT ACTUAL TIE BAR LOCATIONS. SEE M-412-1 SHEET 5 OF 9 FOR TIE BAR PLACEMENT LOCATIONS.
10. IF A JONT IS NOT CONTINUOUS INTO AN ADJACENT SLAB, A JOINT TERMINATION CORE (SEE SHEET 5) SHALL BE CONSTRUCTED USING 4 INCH PVC PIPE FILLED WITH AN APPROVED NON-SHRINK GROUT OR BOND BREAKER FILLED WITH AN APPROVED NON-SHRINK GROUT.

JOINT LEGEND

(SEE SHEET 5 FOR JOINT DETAILS)

- EJ — EXPANSION JOINT
- TD — TRANSVERSE DOWELED
- UT — UNTIED
- LT — LONGITUDINAL TIED
- DE — DOWELED EXPANSION

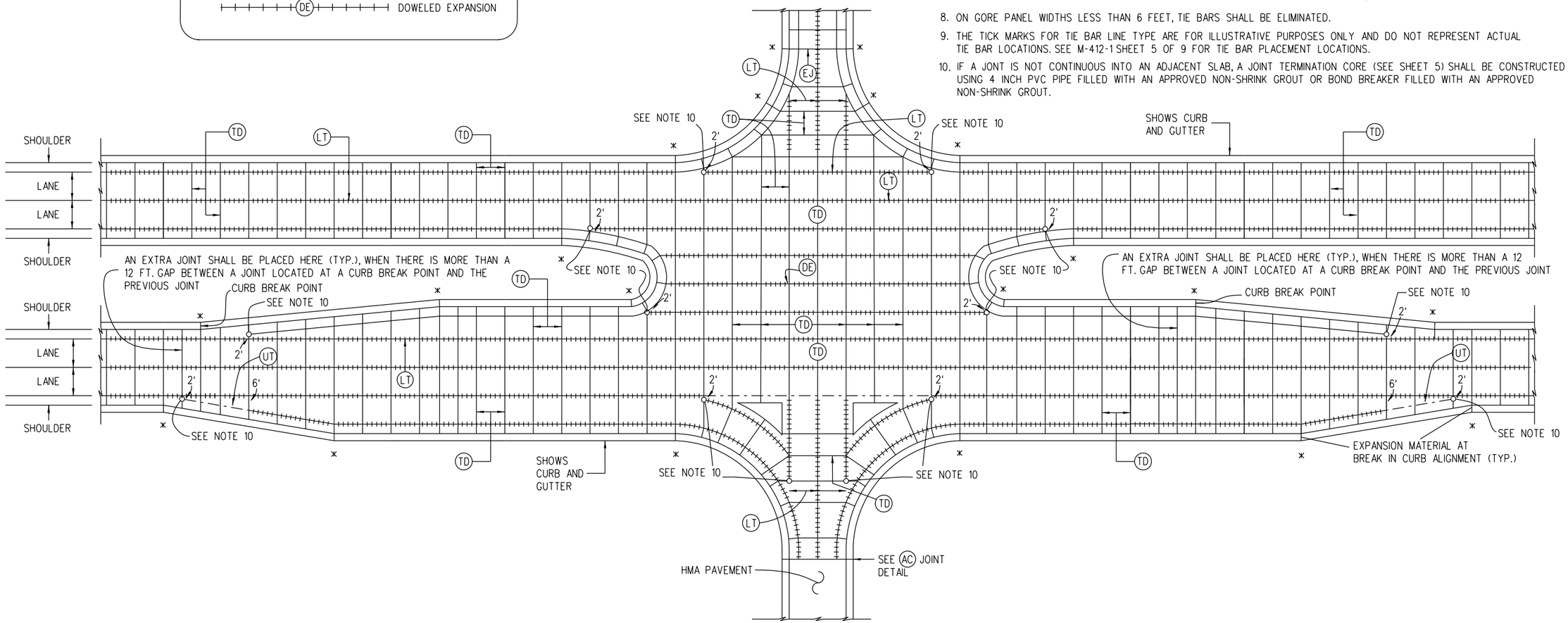

MULTI-LANE INTERSECTION WITH SPEED CHANGE LANE AND CONCRETE SHOULDERS

Computer File Information		Sheet Revisions	
Creation Date: 07/31/19		Date:	Comments
Designer Initials: JBK	(R-X)	01/31/22	Revised all sheets.
Last Modification Date: 01/31/22	(R-X)		
Detailer Initials: LTA/HMG	(R-X)		
CAD Ver.: MicroStation V8 Scale: Not to Scale Units: English	(R-X)		

Colorado Department of Transportation
2829 West Howard Place
CDOT HQ, 3rd Floor
Denver, CO 80204
Phone: 303-757-9021 FAX: 303-757-9868
Construction Engineering Services JBK

CONCRETE PAVEMENT JOINTS

Issued by the Project Development Branch: July 31, 2019

STANDARD PLAN NO.
M-412-1
Standard Sheet No. 4 of 9
Project Sheet Number:

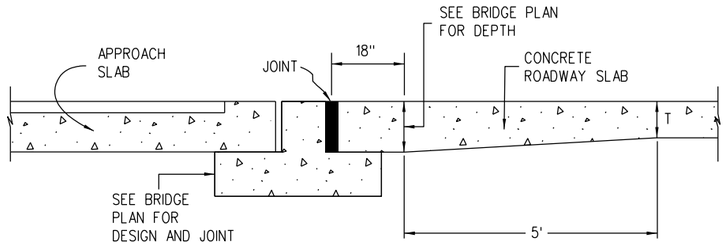

BRIDGE APPROACH

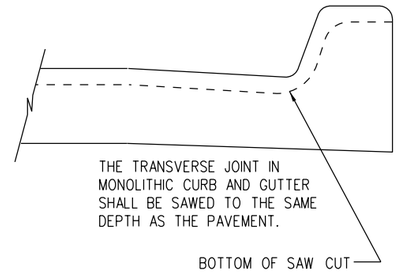

NOTE

1. PAVEMENT THICKNESS (T), SHALL BE AS SHOWN ON THE PLANS.

REINFORCING SIZE TABLE

TIE BAR SIZE IS NO. 5 WHEN PAVEMENT IS PLACED ON UNBOUND BASES.

TIE BAR IS NO. 6 WHEN PAVEMENT IS PLACED ON LIME TREATED SOIL, ASPHALT OR CEMENT TREATED, MILLED ASPHALT, OR RECYCLED ASPHALT BASES.

PAVEMENT THICKNESS (T)	DOWEL BAR DIAMETER
7 IN. ≤ T < 8 IN.	1 IN.
8 IN. ≤ T ≤ 10 IN.	1.25 IN.
10 IN. < T ≤ 15 IN.	1.50 IN.

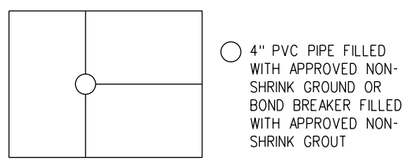

JTC

JOINT TERMINATION CORE

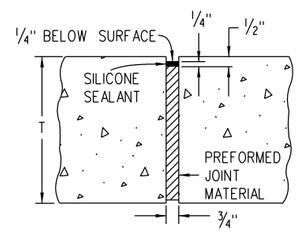

EJ

EXPANSION JOINT

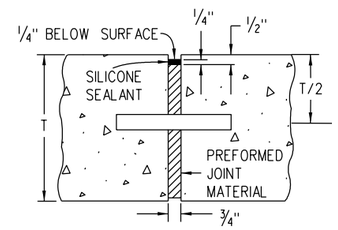

DE

DOWELED EXPANSION JOINT

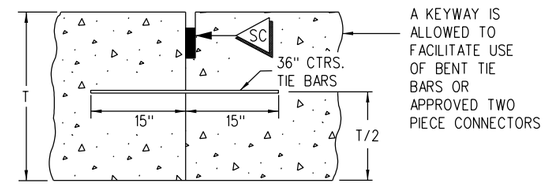

LT

LONGITUDINAL TIED JOINT

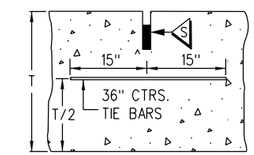

LT

SAWED LONGITUDINAL JOINT

(LONGITUDINAL WEAKENED PLANE JOINT)

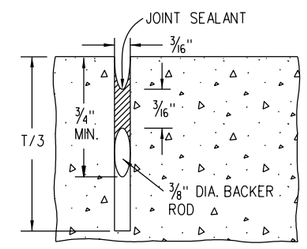

SAWED JOINT S

*** USE T/4 WHEN T < 8 IN.

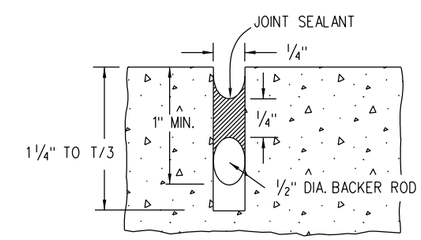

SEAL AT CONSTRUCTION JOINT SC

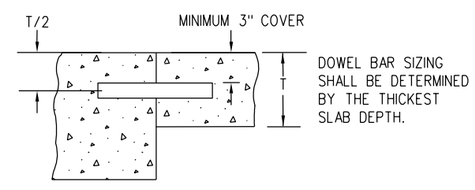

DOWEL AND TIE BAR PLACEMENT FOR VARYING PAVEMENT THICKNESSES

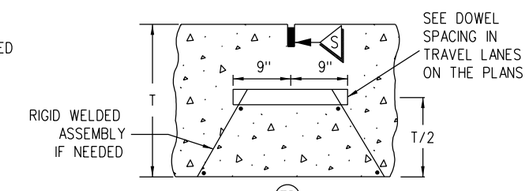

TD

DOWELED TRANSVERSE CONSTRUCTION OR CONTRACTION JOINT

(TRANSVERSE WEAKENED PLANE JOINT)

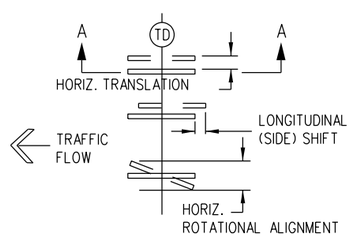

PLAN VIEW

SHOWING HORIZ. TRANSLATION, LONGITUDINAL (SIDE) SHIFT AND HORIZ. ROTATIONAL ALIGNMENT

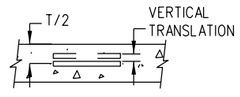

SECTION A-A

SHOWING VERTICAL TRANSLATION TOLERANCE

T IS PAVEMENT THICKNESS FROM PLANS

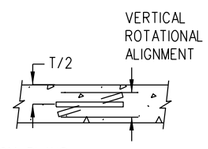

SECTION A-A

SHOWING VERTICAL ROTATIONAL ALIGNMENT

DETAILS ILLUSTRATING DOWEL PLACEMENT TOLERANCES

SEE SUBSECTION 412.13(b)2 FOR ALLOWED TOLERANCE VALUES.

Computer File Information		Sheet Revisions	
Creation Date: 07/31/19		Date:	Comments
Designer Initials: JBK	R-X	01/31/22	Revised all sheets.
Last Modification Date: 01/31/22	R-X		
Detailer Initials: LTA/HMG	R-X		
CAD Ver.: MicroStation V8 Scale: Not to Scale Units: English	R-X		

Colorado Department of Transportation
2829 West Howard Place
CDOT HQ, 3rd Floor
Denver, CO 80204
Phone: 303-757-9021 FAX: 303-757-9868
Construction Engineering Services JBK

CONCRETE PAVEMENT JOINTS

Issued by the Project Development Branch: July 31, 2019

STANDARD PLAN NO.
M-412-1
Standard Sheet No. 5 of 9
Project Sheet Number:

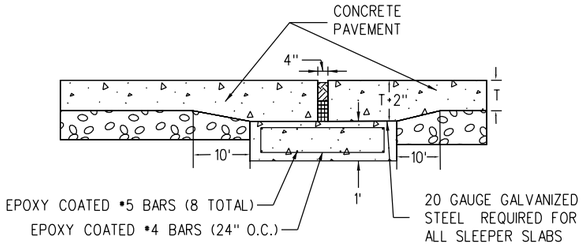

PCCP EXPANSION JOINT

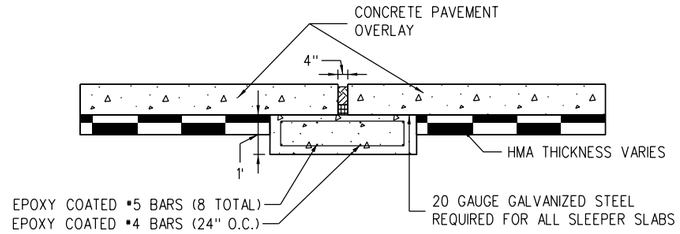

PCCP OVERLAY EXPANSION JOINT

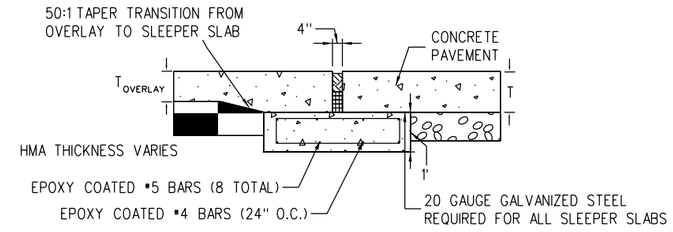

PCCP OVERLAY TO EXISTING PCCP TRANSITION WITH EXPANSION JOINT

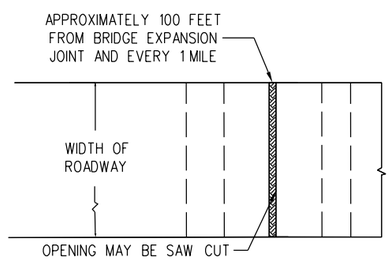

SLEEPER SLAB
PLAN VIEW

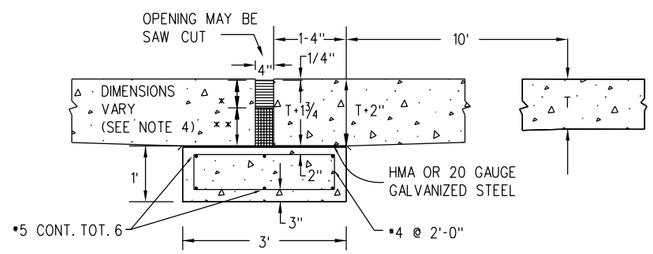

SLEEPER SLAB
PROFILE VIEW

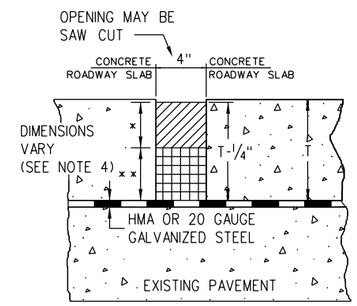

EXPANSION JOINT DETAIL

NOT TO SCALE

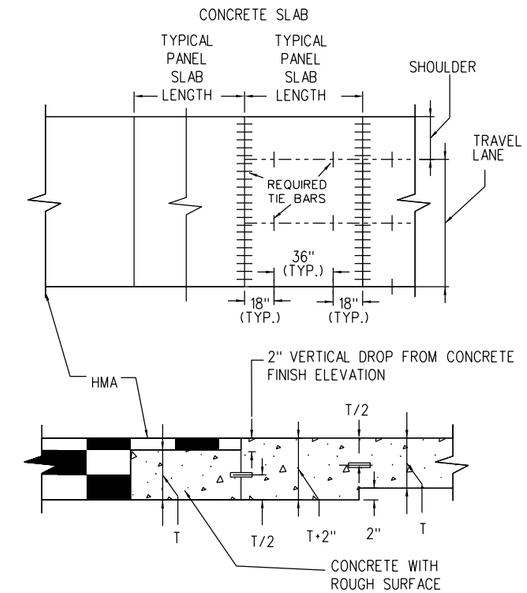

(AC)

ASPHALT TO CONCRETE TRANSITION

NOT TO SCALE

NOTES

1. CONCRETE EXPANSION JOINTS SHALL BE REQUIRED AT THE LOCATIONS SHOWN. SLEEPER SLABS FOR THE CONCRETE EXPANSIONS SHALL BE CLASS D OR P CONCRETE. REINFORCING STEEL SHALL BE GRADE 60 EPOXY COATED. THE COST OF THE CONCRETE, REINFORCING STEEL, AND GALVANIZED STEEL SHALL NOT BE PAID FOR SEPARATELY BUT SHALL BE INCLUDED IN THE COST OF ITEM 412 CONCRETE PAVEMENT BID ITEM.

2. AT EACH OF THE RECONSTRUCTION EXPANSION JOINTS A PIPE EDGE DRAIN SHALL BE INSTALLED PER M-605-1 OF THE M&S STANDARD PLANS. THE EDGE DRAIN SHALL CONTINUE 2 FEET BEYOND BOTH SIDES OF THE EXPANSION JOINT AND INCLUDE A TRANSVERSE UNDERDRAIN AT EACH END ON THE EDGE DRAIN. IF THE UNDERDRAIN PIPE CANNOT DRAIN OUTSIDE OF THE ROADWAY PRISM, THE PIPE EDGE DRAIN SHALL NOT BE INSTALLED. THIS WORK SHALL NOT BE PAID FOR SEPERATELY, BUT SHALL BE INCLUDED IN THE PRICE OF ITEM 412 CONCRETE PAVEMENT.

3. *4 INCH WIDE PRECOMPRESSED CHEMICALLY RESISTANT FOAM TOPPED WITH A TRAFFIC-GRADE SILICONE SEALANT SUCH AS WILLSEAL 250, WABO HSEAL, EMSEAL BEJS SYSTEM, OR AN ALTERNATIVE AS APPROVED BY THE ENGINEER AND REGION MATERIALS ENGINEER. EXPANSION JOINTS SHALL BE PLACED AT APPROXIMATELY ONE MILE INCREMENTS AS DIRECTED BY THE ENGINEER. THE COST SHALL BE INCLUDED IN ITEM 412 - PLACE CONCRETE PAVEMENT. DEPTH OF SEALANT SHALL BE BASED ON THE TABLE BELOW.

PAVEMENT THICKNESS (T)	SEALANT DEPTH (INCHES)
* 11 IN.	4
> 11 IN.	6

4. **STYROFOAM OR OTHER MATERIAL AS APPROVED BY THE ENGINEER AND REGION MATERIALS ENGINEER.

Computer File Information		Sheet Revisions	
Creation Date: 07/31/19		Date:	Comments
Designer Initials: JBK	(R-X)	01/31/22	Revised all sheets.
Last Modification Date: 01/31/22	(R-X)		
Detailer Initials: LTA/HMG	(R-X)		
CAD Ver.: MicroStation V8 Scale: Not to Scale Units: English	(R-X)		

Colorado Department of Transportation
2829 West Howard Place
CDOT HQ, 3rd Floor
Denver, CO 80204
Phone: 303-757-9021 FAX: 303-757-9868
Construction Engineering Services JBK

CONCRETE PAVEMENT JOINTS

Issued by the Project Development Branch: July 31, 2019

STANDARD PLAN NO.
M-412-1
Standard Sheet No. 6 of 9
Project Sheet Number:

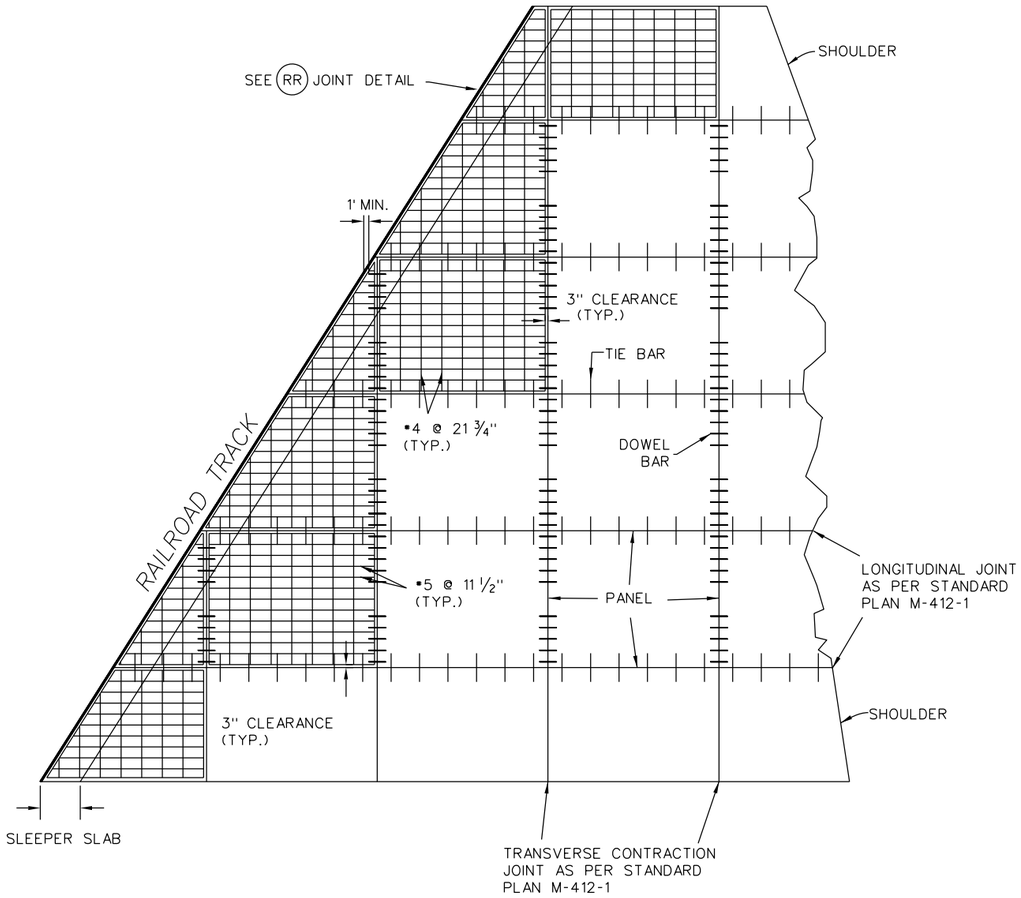

SKEWED RAILROAD PLAN VIEW

NOTE ON SKEWED RAILROAD DETAILS:

1. IF THE FIRST PANEL ADJACENT TO THE RAIL ROAD CROSSING IS LESS THAN ONE HALF THE AREA OF A NORMAL FULL PANEL, THEN THE FIRST PARTIAL PANEL AND THE NEXT FULL PANEL SHALL BE LONGITUDINALLY AND TRANSVERSLY REINFORCED AS SHOWN IN THE DETAILS. IF THE AREA OF THE FIRST PANEL ADJACENT TO THE RAIL ROAD CROSSING IS GREATER THAN ONE HALF THE AREA OF A NORMAL FULL PANEL, THEN JUST THE FIRST PARTIAL PANEL SHALL BE REINFORCED.

NOTES ON ALL RAILROAD DETAILS:

1. CONCRETE CLASS P OR CLASS D SHALL BE USED FOR THE SLEEPER SLAB.
2. GRADE 60 EPOXY COATED REINFORCING STEEL IS REQUIRED, OTHER THAN TIE AND DOWEL BARS.
3. ALL COST ASSOCIATED WITH THE REQUIREMENTS OF THESE DETAILS SHALL BE INCLUDED IN THE COST OF ITEM 412 - CONCRETE PAVEMENT (_ INCH).
4. THE CONTRACTOR SHALL PROVIDE, FOR APPROVAL, TO THE ENGINEER A DETAILED PLAN SHOWING THE JOINT CONFIGURATION A MINIMUM OF TWO WEEKS PRIOR TO THE START OF REINFORCING STEEL FABRICATION.
5. THESE DETAILS SHALL APPLY TO BOTH SIDES OF THE RAIL ROAD CROSSING, IF CONCRETE PAVEMENT IS REQUIRED.

NOTE ON PERPENDICULAR RAILROAD DETAILS:

1. THE LENGTH OF THE FIRST PANEL ADJACENT TO THE RAIL ROAD SHALL BE BETWEEN 12 AND 15 FEET.

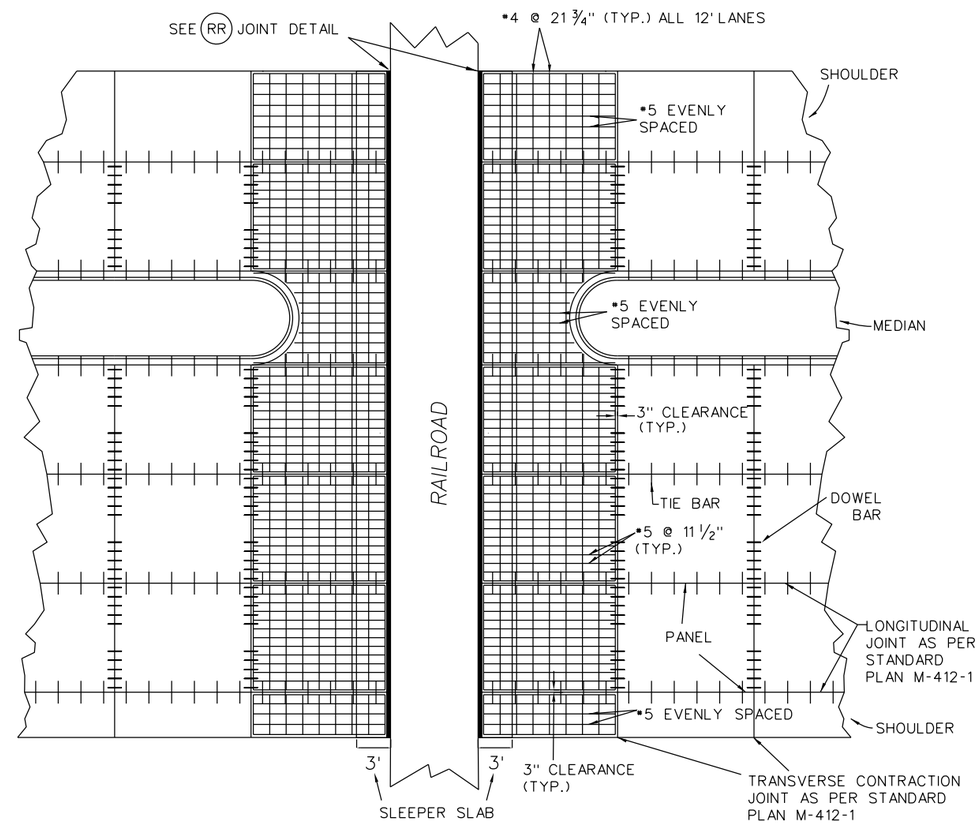

PERPENDICULAR RAILROAD PLAN VIEW

Computer File Information		Sheet Revisions	
Creation Date: 07/31/19		Date:	Comments
Designer Initials: JBK	(R-X)	01/31/22	Revised all sheets.
Last Modification Date: 01/31/22	(R-X)		
Detailer Initials: LTA/HMG	(R-X)		
CAD Ver.: MicroStation V8 Scale: Not to Scale Units: English	(R-X)		

Colorado Department of Transportation
2829 West Howard Place
CDOT HQ, 3rd Floor
Denver, CO 80204
Phone: 303-757-9021 FAX: 303-757-9868
Construction Engineering Services JBK

CONCRETE PAVEMENT JOINTS

Issued by the Project Development Branch: July 31, 2019

STANDARD PLAN NO.
M-412-1
Standard Sheet No. 7 of 9
Project Sheet Number:

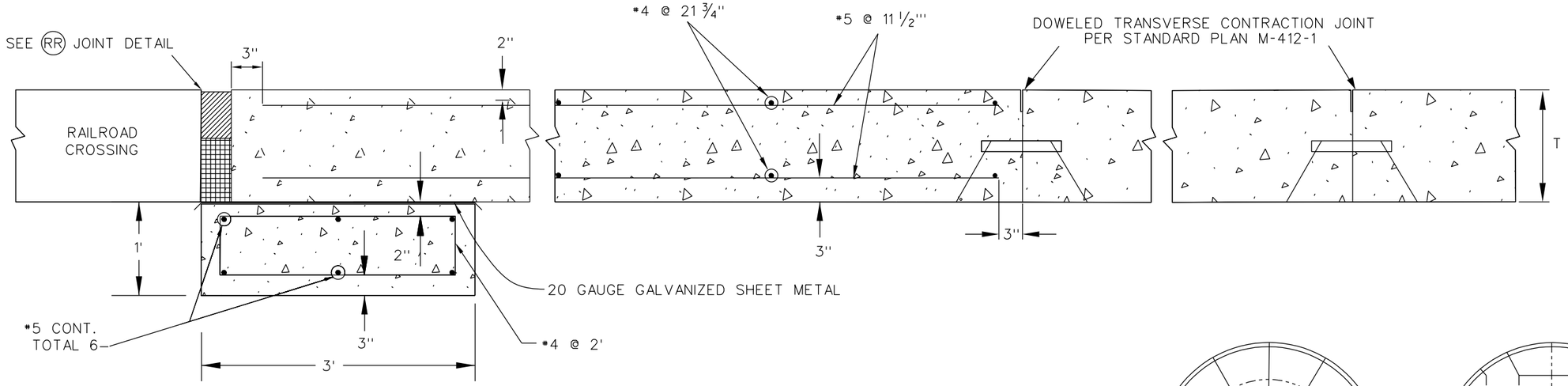

RAILROAD PROFILE VIEW

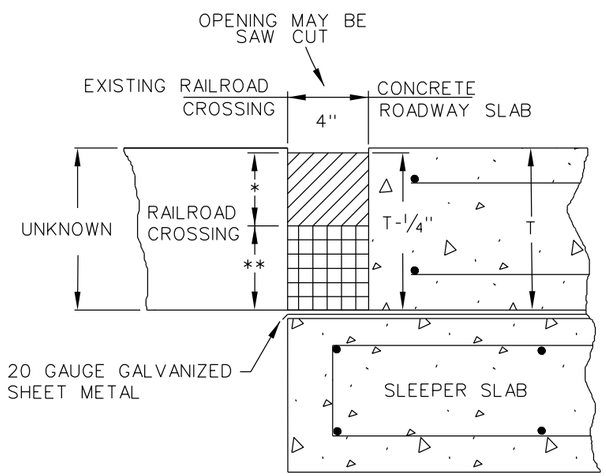

(RR)

RAILROAD JOINT DETAILS

NOTES ON RAILROAD JOINTS:

1. * FOR SKEWED RAILROADS: 2" WIDE X 3" DEEP CHEMICALLY RESISTANT NEOPRENE JOINT SEAL.

   FOR PERPENDICULAR RAILROADS: PREFORMED COMPRESSION SEALS MEETING THE REQUIREMENTS OF SECTION 412 FOR THE OPENING SHOWN.

2. ** PREFORMED EXPANSION JOINT FILLER AS APPROVED BY THE ENGINEER.

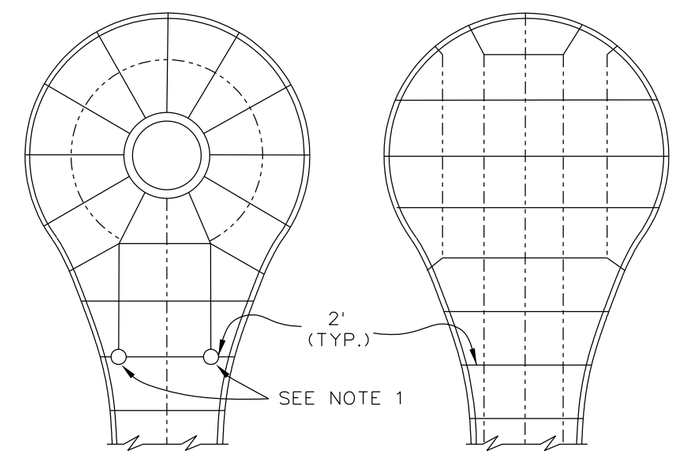

OPEN CENTER

CLOSED CENTER

CUL-DE-SAC

NOTE ON CUL-DE-SACS:

1. IF A JOINT IS NOT CONTINUOUS INTO AN ADJACENT SLAB, A JOINT TERMINATION CORE (SEE SHEET 5) SHALL BE CONSTRUCTED USING 4" PVC PIPE FILLED WITH AN APPROVED NON-SHRINK GROUT OR BOND BREAKER FILLED WITH AN APPROVED NON-SHRINK GROUT.

Computer File Information		Sheet Revisions	
Creation Date: 07/31/19		Date:	Comments
Designer Initials: JBK	(R-X)	01/31/22	Revised all sheets.
Last Modification Date: 01/31/22	(R-X)		
Detailer Initials: LTA/HMG	(R-X)		
C-D Ver.: MicroStation V8 Scale: Not to Scale Units: English	(R-X)		

Colorado Department of Transportation
2829 West Howard Place
CDOT HQ, 3rd Floor
Denver, CO 80204
Phone: 303-757-9021 FAX: 303-757-9868
Construction Engineering Services JBK

CONCRETE PAVEMENT JOINTS

Issued by the Project Development Branch: July 31, 2019

STANDARD PLAN NO.
M-412-1

NOTES

1. ALL RADIAL AND TRANSVERSE JOINTS SHALL BE (TD) JOINTS.
2. (EJ) JOINTS SHALL BE CONSTRUCTED WITH PREFORMED EXPANSION JOINT FILLER AS APPROVED BY THE ENGINEER.
3. THE TICK MARKS FOR TIE BAR LINE TYPE ARE FOR ILLUSTRATIVE PURPOSES ONLY AND DO NOT REPRESENT ACTUAL TIE BAR LOCATIONS. SEE M-412-1 SHEET 5 OF 9 FOR TIE BAR PLACEMENT LOCATIONS.
4. EXPANSION JOINTS SHALL BE INSTALLED BETWEEN CONCRETE CURB AND ANY FIXED STRUCTURE OR BRIDGE. EXPANSION JOINT MATERIAL SHALL EXTEND THE FULL DEPTH OF THE CONTACT SURFACE.
5. JOINT CONFIGURATIONS SHOWN ARE FOR SIMPLE ROUNDABOUTS AND DO NOT REPRESENT ALL ROUNDABOUT DESIGNS. THE CONTRACTOR SHALL SUBMIT A JOINT LAYOUT FOR APPROVAL BY THE ENGINEER PRIOR TO CONSTRUCTION. THE PAVEMENT JOINT LAYOUT SHALL CONSIDER, AT A MINIMUM, CONSTRUCTION STAGING AND LANE DELINEATION.

JOINT LEGEND

(SEE SHEET 5 FOR JOINT DETAILS)

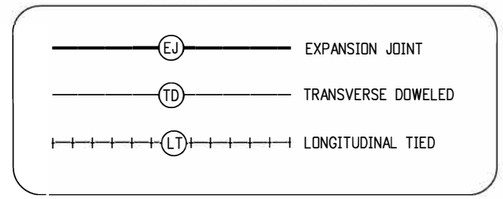

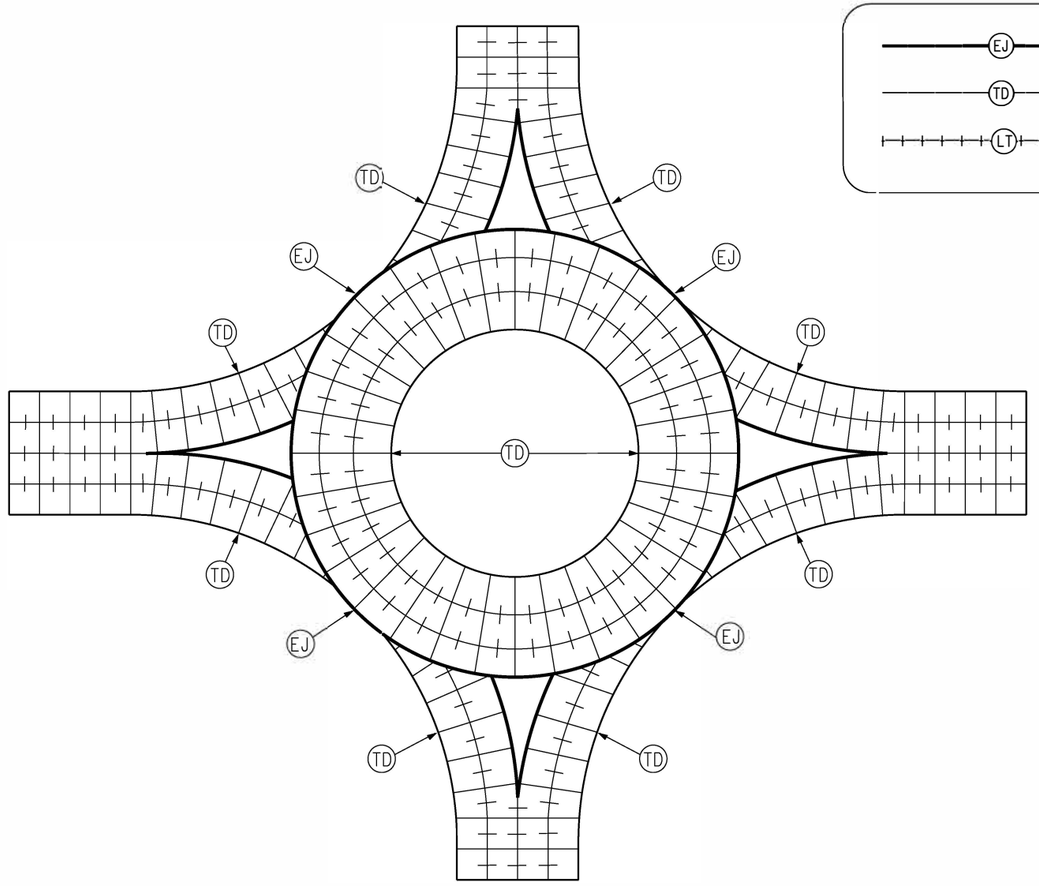

ISOLATED CIRCLE ROUNDABOUT

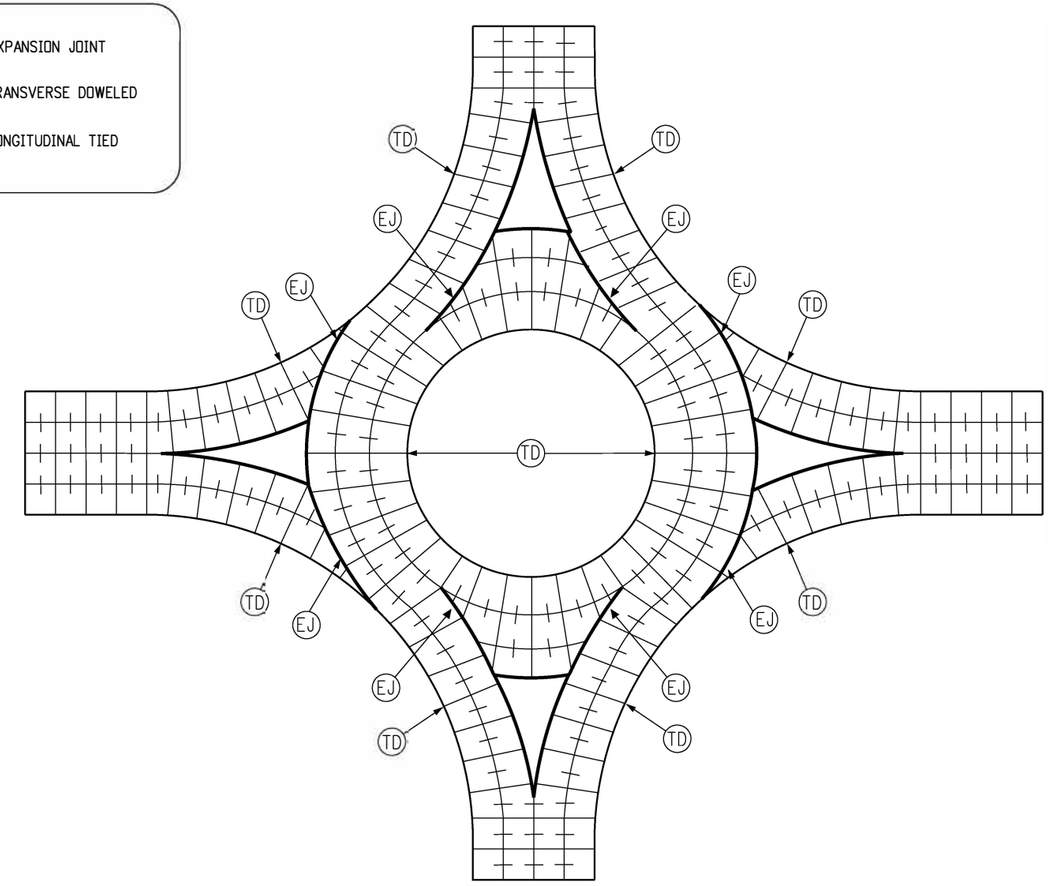

PAVE-THROUGH ROUNDABOUT

Computer File Information		Sheet Revisions	
Creation Date: 07/31/19		Date:	Comments
Designer Initials: JBK	(R-X)	01/31/22	Revised all sheets.
Last Modification Date: 01/31/22	(R-X)		
Detailer Initials: LTA/HMG	(R-X)		
CAD Ver.: MicroStation V8 Scale: Not to Scale Units: English	(R-X)		

Colorado Department of Transportation
2829 West Howard Place
CDOT HQ, 3rd Floor
Denver, CO 80204
Phone: 303-757-9021 FAX: 303-757-9868
Construction Engineering Services JBK

CONCRETE PAVEMENT JOINTS

Issued by the Project Development Branch: July 31, 2019

STANDARD PLAN NO.
M-412-1
Standard Sheet No. 9 of 9
Project Sheet Number:

SL-B THICKNESS (T) (IN.)								
-NGLE	8	9	10	11	12	13	14	15≥
	DIST-NCE TO HOLE (IN.)							
35	5.75	6.50	7.25	7.75	8.50	-	-	-
40	-	-	-	6.50	7.25	7.75	8.25	-
45	-	-	-	-	6.00	6.50	7.00	7.50
LENGTH OF B-R (L) (IN.)								
35	9.50	11.00	12.50	14.50	16.00	-	-	-
40	-	-	-	12.50	14.00	16.00	18.50	-
45	-	-	-	-	12.00	14.00	16.50	18.00
EPOXY CO-TED B-R NUMBER (#)								
	6	6	6	6	6	8	8	8

CROSS STITCHING B-R DIMENSIONS -ND LOC-TION OF DRILL HOLES

GENER-L NOTES

1. THERE SH-LL BE - MINIMUM 1 INCH G-P FROM THE ENDS OF THE DEFORMED REB-RS TO THE TOP OR BOTTOM OF THE CONCRETE SL-B.
2. DO NOT DRILL HOLE COMPLETELY THROUGH THE SL-B, SO TH-T THE EPOXY/GROUT WILL BE CONT-INED IN THE HOLE WHILE B-CK FILLING.

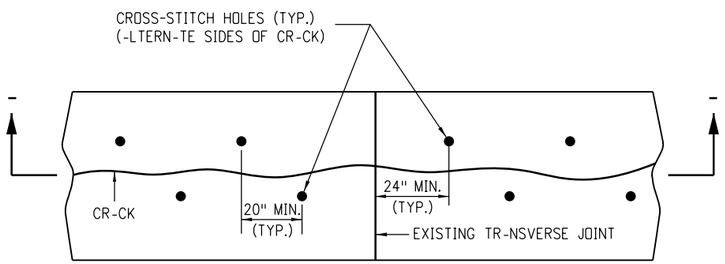

PL-N VIEW

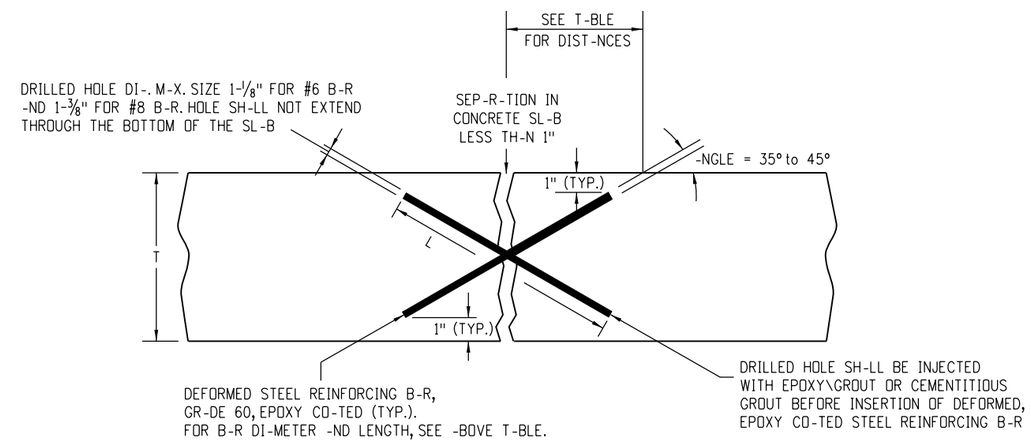

SECTION -A-

CROSS STITCHING DETAILS

FOR PCCP 8" OR MORE IN THICKNESS

Computer File Information		Sheet Revisions	
Creation Date: 10/07/19		Date:	Comments
Designer Initials: JBK	R-X		
Last Modification Date: 09/06/22	R-X		
Detailer Initials: LTA	R-X		
C-D Ver.: MicroStation V8 Scale: Not to Scale Units: English	R-X		

Colorado Department of Transportation
2829 West Howard Place
CDOT HQ, 3rd Floor
Denver, CO 80204
Phone: 303-757-9021 FAX: 303-757-9868
Project Development Branch JBK

CONCRETE PAVEMENT CRACK REPAIR

Issued by the Project Development Branch: July 31, 2019

STANDARD PLAN NO.
M-412-2
Standard Sheet No. 1 of 6
Project Sheet Number:

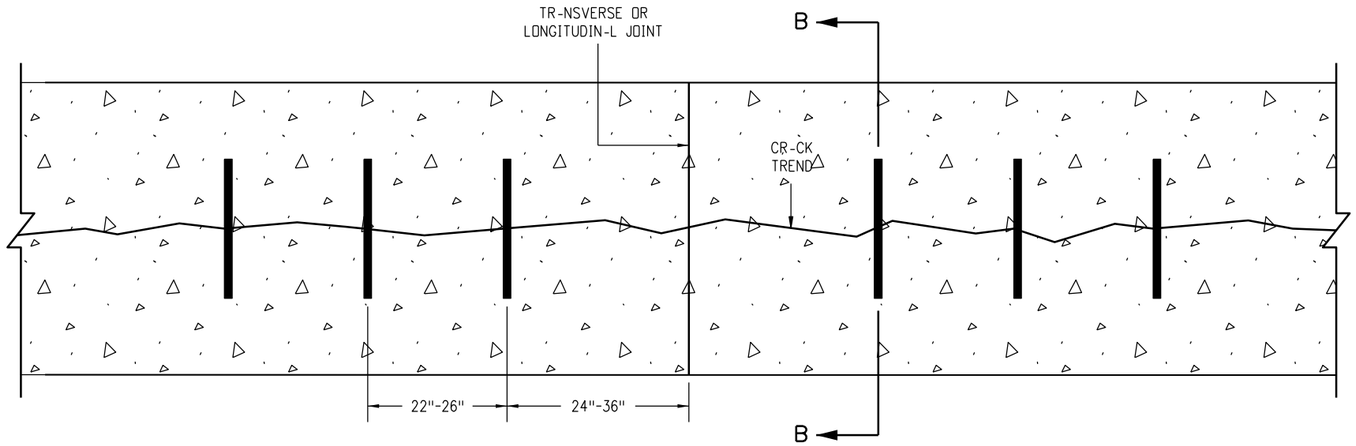

PL-N VIEW

P-VEMENT THICKNESS (T)	TIE B-R SIZE
T ≤ 6 INCHES	#4
6 INCHES < T < 8 INCHES ON UNBOUNDED B-SE	#5
6 INCHES < T < 8 INCHES ON LIME TRE-TED, -SPH-LT OR CEMENT TRE-TED, MILLED -SPH-LT OR RECYCLED -SPH-LT B-SES	#6

TIE B-RS SHOULD BE PL-CED -PPROXIM-TELY PERPENDICUL-R TO THE GENER-L TREND OF THE CR-CK.

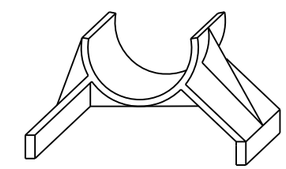

TYPIC-L CH-IR DET-IL

ONE REQUIRED UNDER E-CH END OF TIE B-R

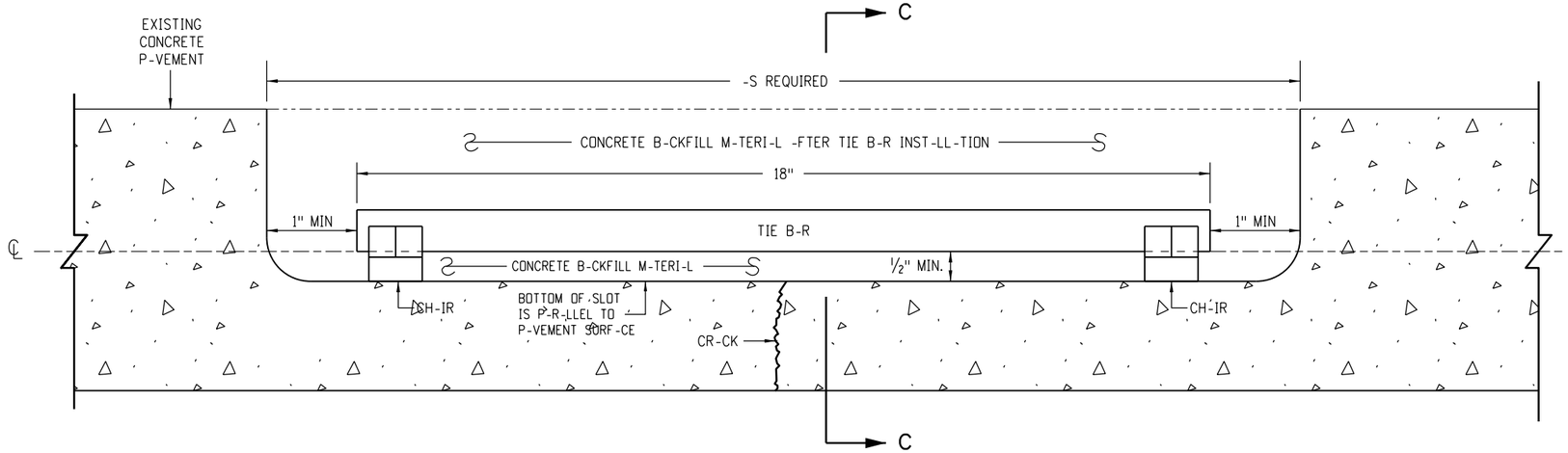

SECTION B-B

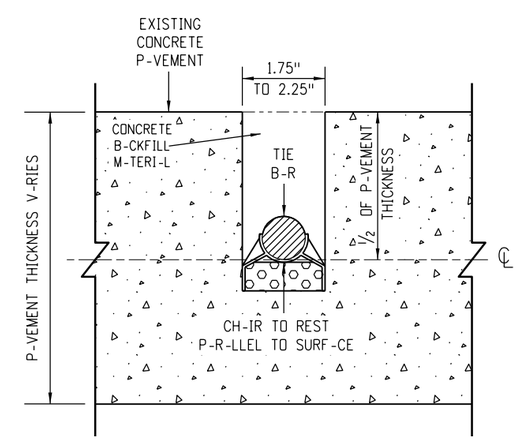

SECTION C-C

SLOT STITCHING DETAILS

FOR PCCP LESS TH-N 8" IN THICKNESS

Computer File Information	
Creation Date: 10/07/19	
Designer Initials: JBK	R-X
Last Modification Date: 09/06/22	R-X
Detailer Initials: LTA	R-X
C-D Ver.: MicroStation V8 Scale: Not to Scale Units: English	R-X

Sheet Revisions	
Date:	Comments

Colorado Department of Transportation
2829 West Howard Place
CDOT HQ, 3rd Floor
Denver, CO 80204
Phone: 303-757-9021 FAX: 303-757-9868
Project Development Branch JBK

CONCRETE PAVEMENT CRACK REPAIR

Issued by the Project Development Branch: July 31, 2019

STANDARD PLAN NO.
M-412-2
Standard Sheet No. 2 of 6
Project Sheet Number:

NOTES

1. IF - LONGITUDIN-L JOINT IS PRESENT IN THE WHEEL P-TH OR -T THE MIDDLE OF THE SL-B, CONT-CT THE ENGINEER.
2. DOWELS SH-LL BE - MINIMUM OF 1 FT. - 6 INCHES -W-Y FROM -NY LONGITUDIN-L JOINT.

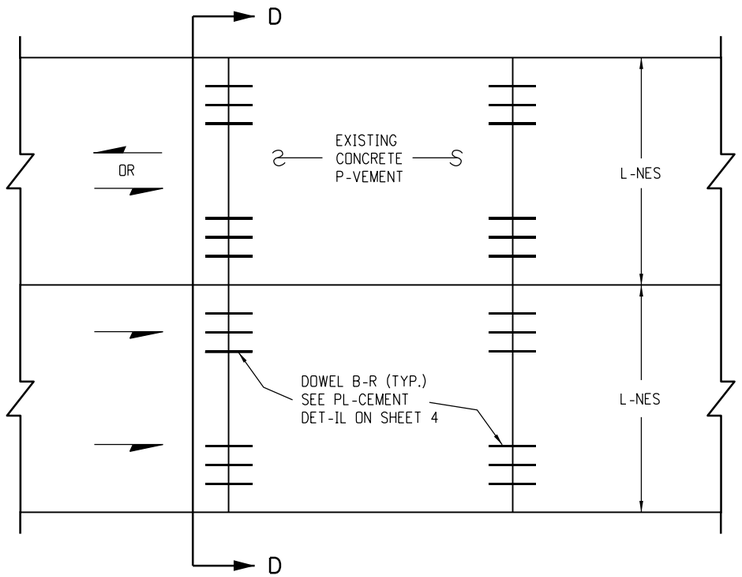

PL-N VIEW
DOWEL B-R RETRO FIT

FOR E-CH L-NE IN UNDIVIDED HIGHW-Y (TWO W-Y TR-FFIC)
OR FOR MULTI-L-NE DIVIDED HIGHW-Y (ONE W-Y TR-FFIC)

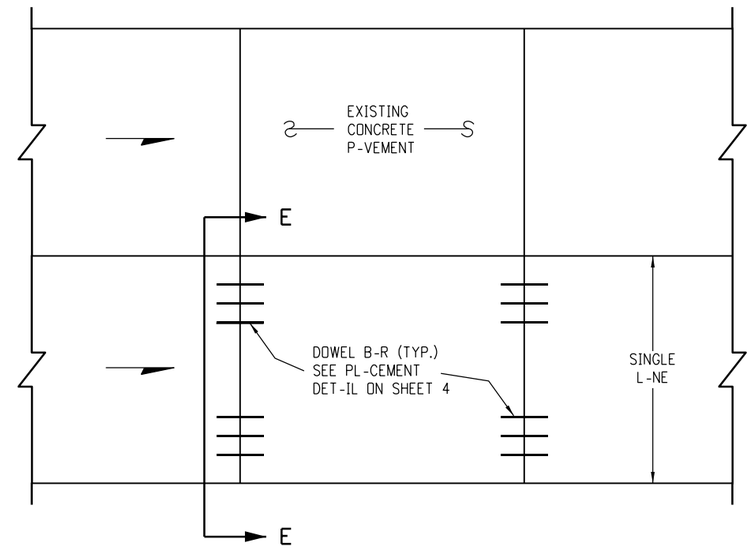

PL-N VIEW
DOWEL B-R RETRO FIT

FOR SINGLE L-NE RETROFIT

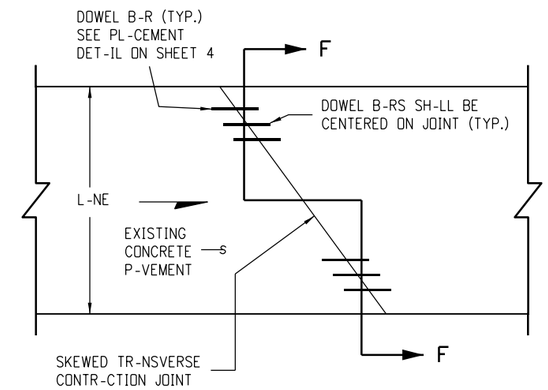

PL-N VIEW
SKEWED JOINT DET-IL

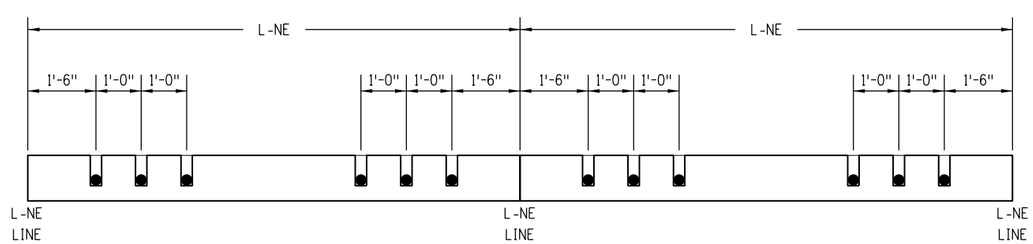

SECTION D-D

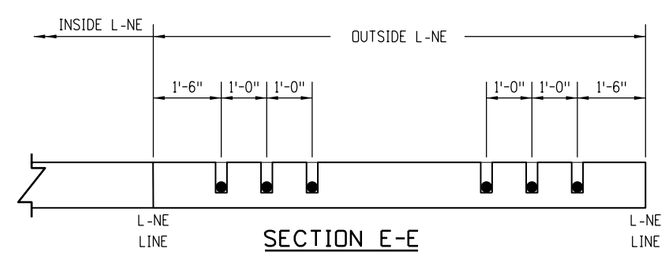

SECTION E-E

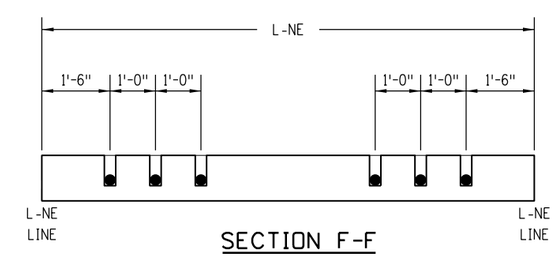

SECTION F-F

DOWEL BAR RETROFIT DETAILS

Computer File Information		Sheet Revisions	
Creation Date: 10/07/19		Date:	Comments
Designer Initials: JBK	(R-X)		
Last Modification Date: 09/06/22	(R-X)		
Detailer Initials: LTA	(R-X)		
C-D Ver.: MicroStation V8 Scale: Not to Scale Units: English	(R-X)		

Colorado Department of Transportation
2829 West Howard Place
CDOT HQ, 3rd Floor
Denver, CO 80204
Phone: 303-757-9021 FAX: 303-757-9868
Project Development Branch JBK

CONCRETE PAVEMENT CRACK REPAIR

Issued by the Project Development Branch: July 31, 2019

STANDARD PLAN NO.
M-412-2
Standard Sheet No. 3 of 6
Project Sheet Number:

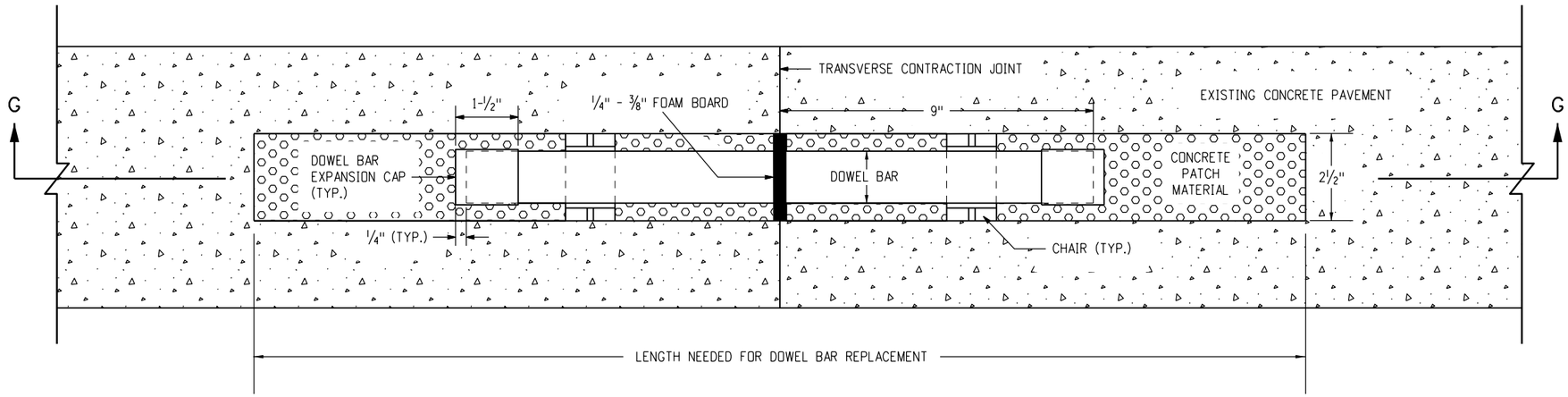

PLAN VIEW

PAVEMENT THICKNESS (T)	DOWEL BAR DIAMETER
7 INCHES ≤ T < 8 INCHES	1 INCH
8 INCHES ≤ T ≤ 10 INCHES	1.25 INCH
10 INCHES < T ≤ 15 INCHES	1.50 INCH

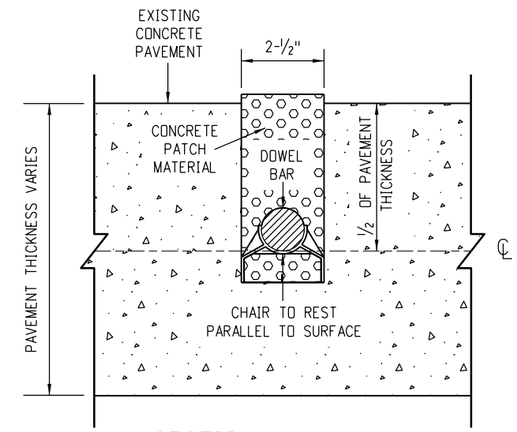

SECTION H-H

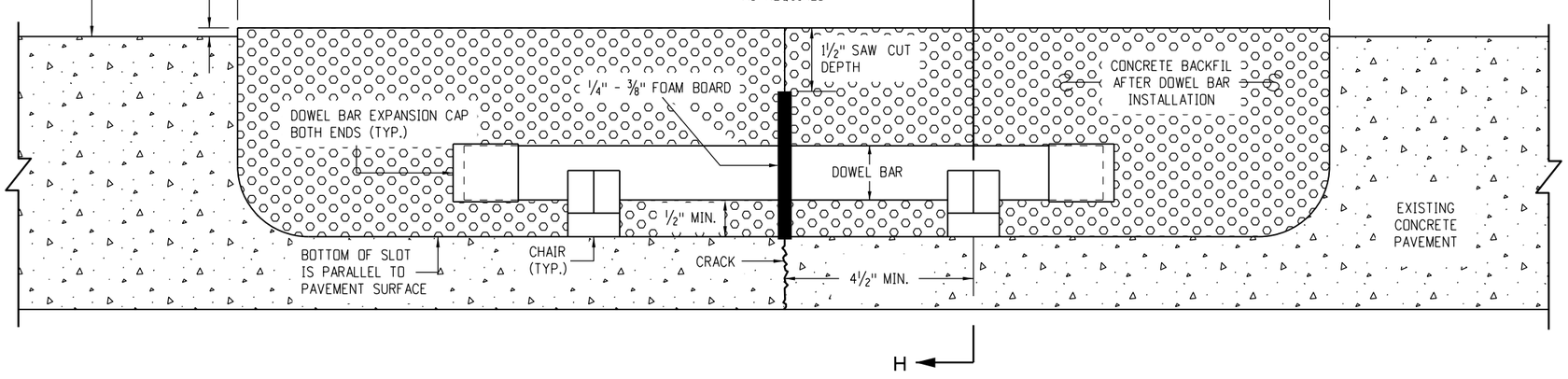

SECTION G-G

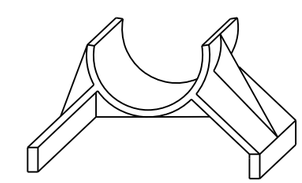

TYPICAL CHAIR DETAIL

ONE REQUIRED UNDER EACH END OF DOWEL BAR

DOWEL BAR RETROFIT DETAILS

Computer File Information	
Creation Date: 10/07/19	
Designer Initials: JBK	R-X
Last Modification Date: 09/06/22	R-X
Detailer Initials: LTA	R-X
CAD Ver.: MicroStation V8 Scale: Not to Scale Units: English	R-X

Sheet Revisions	
Date:	Comments

Colorado Department of Transportation
2829 West Howard Place
CDOT HQ, 3rd Floor
Denver, CO 80204
Phone: 303-757-9021 FAX: 303-757-9868
Project Development Branch JBK

CONCRETE PAVEMENT CRACK REPAIR

Issued by the Project Development Branch: July 31, 2019

STANDARD PLAN NO.
M-412-2
Standard Sheet No. 4 of 6
Project Sheet Number:

NOTES

1. DAMAGE TO THE CONCRETE RESULTING FROM THE CONTRACTOR'S DRILLING OPERATIONS SHALL BE REPAIRED AT THE CONTRACTOR'S EXPENSE.
2. ALL FULL AND HALF SLABS TO BE REPLACED SHALL BE DOUBLE SAW CUT TO PROTECT THE ADJACENT SLABS FROM DAMAGE.
3. DOUBLE SAW CUTS SHALL BE THE FULL DEPTH OF CONCRETE SLAB.
4. THE INSIDE DOUBLE SAW CUT SHALL BE 4 INCHES MINIMUM IN FROM AREA TO BE REMOVED AS SHOWN IN THE DETAIL.
5. BOTH LONGITUDINAL AND TRANSVERSE DOUBLE SAW CUTS SHALL BE DONE PRIOR TO REMOVING SLAB.
6. ALL SAW CUTTING AND CONCRETE WASTE WATER RESIDUE SHALL BE CONTAINED AND NOT ALLOWED TO ENTER ANY STORM DRAIN OR SURFACE WATER.
7. PANELS SHALL BE REMOVED SO AS TO MINIMIZE DAMAGE TO THE SUBGRADE.
8. NO LARGE EQUIPMENT SHALL BE ALLOWED ON EXPOSED SUBGRADE.
9. ALL PARTIAL SLAB REPLACEMENTS SHALL BE FULL WIDTH WITH A LENGTH OF 6 FEET TO 9 FEET AS SHOWN IN THE DETAIL. SLAB SIZES LESS THAN THAT ARE NOT PERMITTED.
10. REMOVED SLABS MUST BE PLACED IN ONE POUR.
11. ALL TRANSVERSE JOINTS ARE DOWELED.
12. ALL LONGITUDINAL JOINTS ARE TIED.

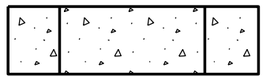

DOUBLE SAW CUT
CROSS-SECTION VIEW

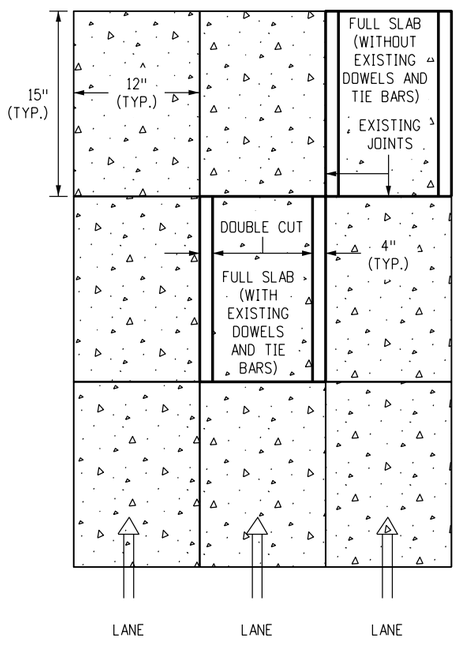

FULL SLAB REPLACEMENT

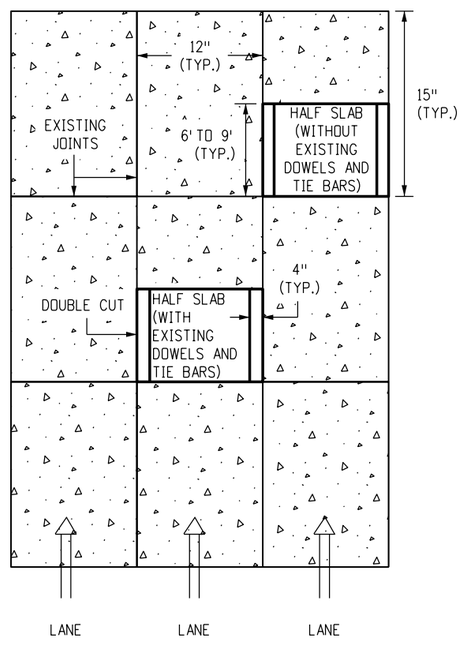

HALF SLAB REPLACEMENT

PLAN VIEW
LONGITUDINAL CUT DETAIL

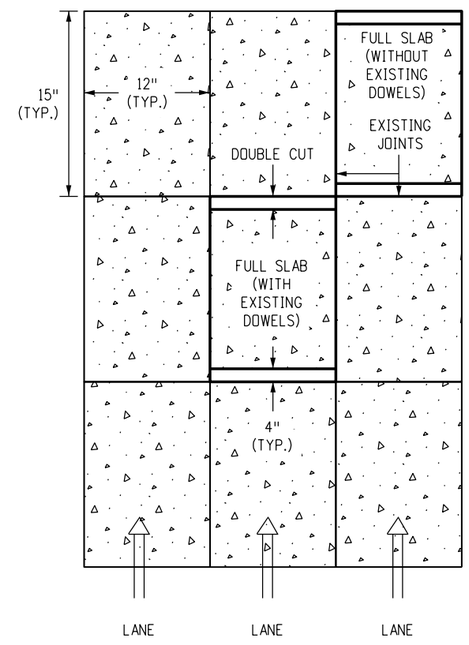

FULL SLAB REPLACEMENT

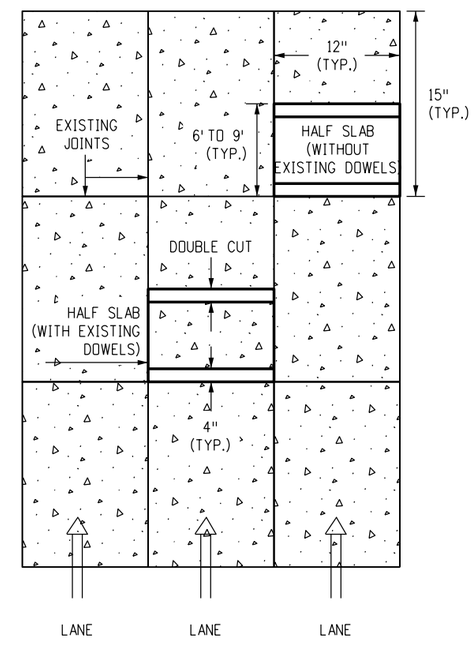

HALF SLAB REPLACEMENT

PLAN VIEW
TRANSVERSE CUT DETAIL

SLAB REMOVAL DETAILS

Computer File Information		Sheet Revisions	
Creation Date: 10/07/19		Date:	Comments
Designer Initials: JBK	(R-X)	09/06/22	Added this new sheet.
Last Modification Date: 09/06/22	(R-X)		
Detailer Initials: LTA	(R-X)		
CAD Ver.: MicroStation V8 Scale: Not to Scale Units: English	(R-X)		

Colorado Department of Transportation
2829 West Howard Place
CDOT HQ, 3rd Floor
Denver, CO 80204
Phone: 303-757-9021 FAX: 303-757-9868
Project Development Branch JBK

CONCRETE PAVEMENT CRACK REPAIR

Issued by the Project Development Branch: July 31, 2019

STANDARD PLAN NO.
M-412-2
Standard Sheet No. 5 of 6
Project Sheet Number:

NOTES

1. DAMAGE TO THE CONCRETE RESULTING FROM THE CONTRACTOR'S DRILLING OPERATIONS SHALL BE REPAIRED AT THE CONTRACTOR'S EXPENSE.
2. HOLES SHALL NOT BE DRILLED WITHIN 18 INCHES OF AN EXISTING LONGITUDINAL JOINT OR TRANSVERSE JOINT.
3. ALL SAW CUTTING AND CONCRETE WASTE WATER RESIDUE SHALL BE CONTAINED (OR AS DIRECTED BY THE ENGINEER).
4. CONCRETE SHALL BE CLASS P OR PRS AND SHALL ACHIEVE COMPRESSIVE STRENGTH OF 2500 PSI PRIOR TO OPENING TO TRAFFIC.
5. THICKNESS OF NEW CONCRETE PAVEMENT SECTION SHALL MATCH EXISTING CONCRETE PAVEMENT SECTION. THIS SHALL INCLUDE EXISTING CONCRETE DEPTH, EXISTING AGGREGATE BASE COURSE, AND REQUIRED SUBGRADE MATERIAL AS DETERMINED BY THE ENGINEER.
6. NEW DOWEL BARS SHALL BE CENTERED BETWEEN EXISTING DOWELS. NEW BARS SHALL BE A MINIMUM OF 3 INCHES FROM EXISTING BARS. THE ENGINEER MAY APPROVE CHANGES DUE TO MISALIGNED EXISTING DOWEL BARS.

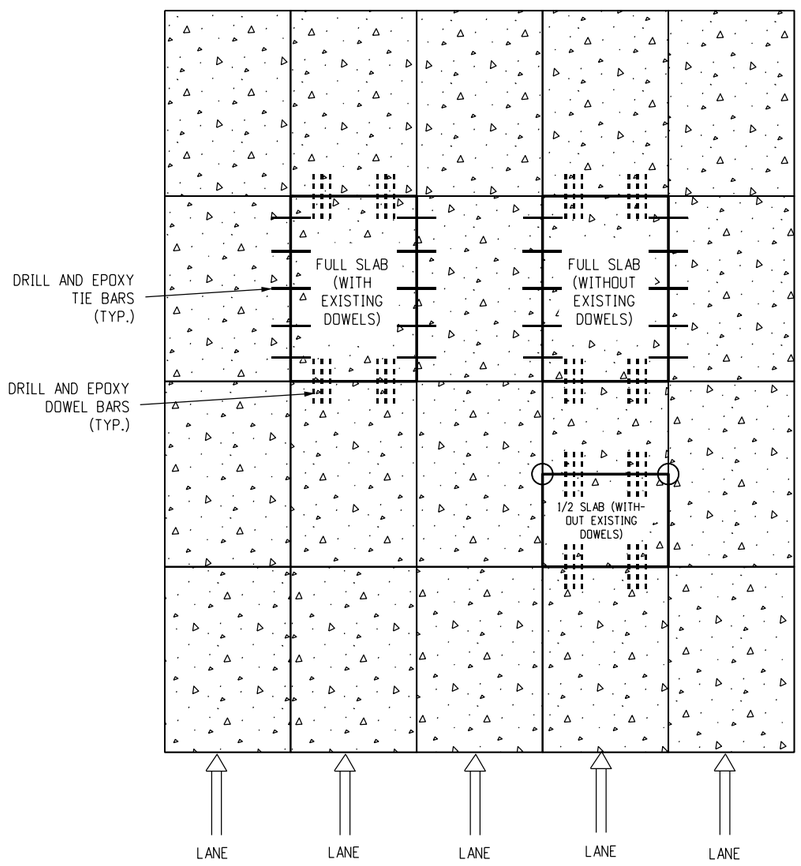

SLAB REPLACEMENT DETAIL

PLAN VIEW

4" PVC PIPE FILLED WITH APPROVED NON-SHRINK GROUT OR BOND BREAKER FILLED WITH APPROVED NON SHRINK GROUT

INSTALLED TRANSVERSE DOWEL BARS

INSTALLED LONGITUDINAL TIE BARS

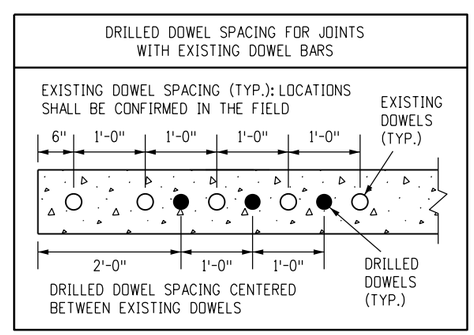

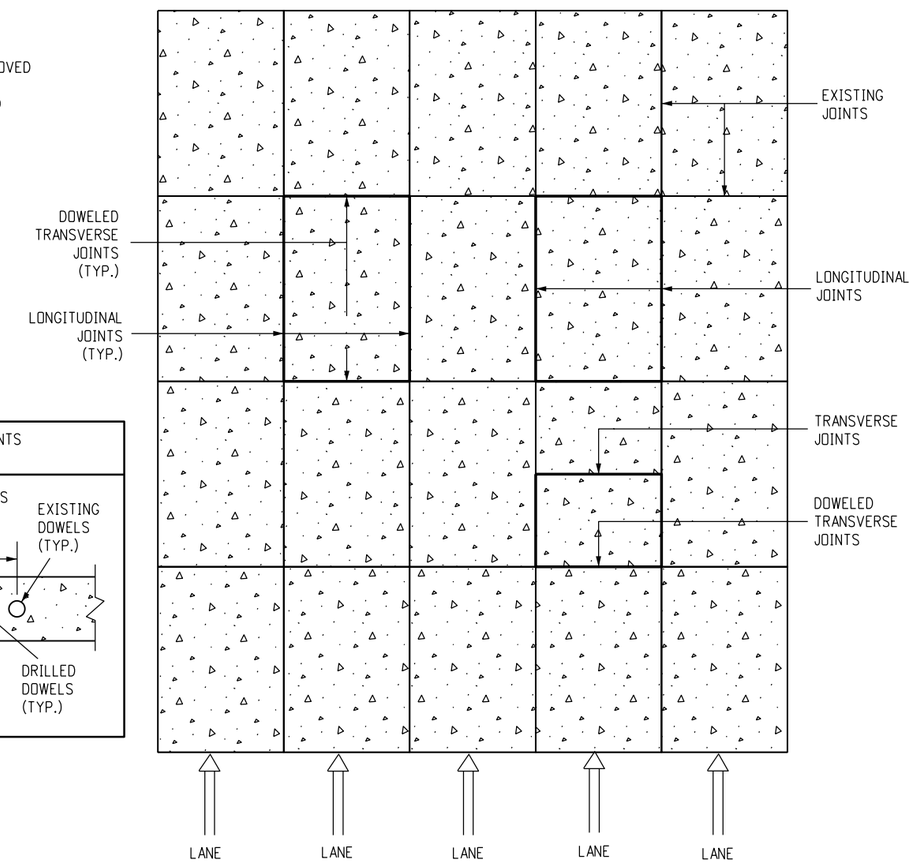

FINAL SAWED JOINT DETAIL

PLAN VIEW

SLAB REPLACEMENT DETAILS

Computer File Information		Sheet Revisions	
Creation Date: 10/07/19		Date:	Comments
Designer Initials: JBK	(R-X)	09/06/22	Added this new sheet.
Last Modification Date: 09/06/22	(R-X)		
Detailer Initials: LTA	(R-X)		
CAD Ver.: MicroStation V8 Scale: Not to Scale Units: English	(R-X)		

Colorado Department of Transportation
2829 West Howard Place
CDOT HQ, 3rd Floor
Denver, CO 80204
Phone: 303-757-9021 FAX: 303-757-9868
Project Development Branch JBK

CONCRETE PAVEMENT CRACK REPAIR

Issued by the Project Development Branch: July 31, 2019

STANDARD PLAN NO.

M-412-2

Standard Sheet No. 6 of 6

Project Sheet Number:

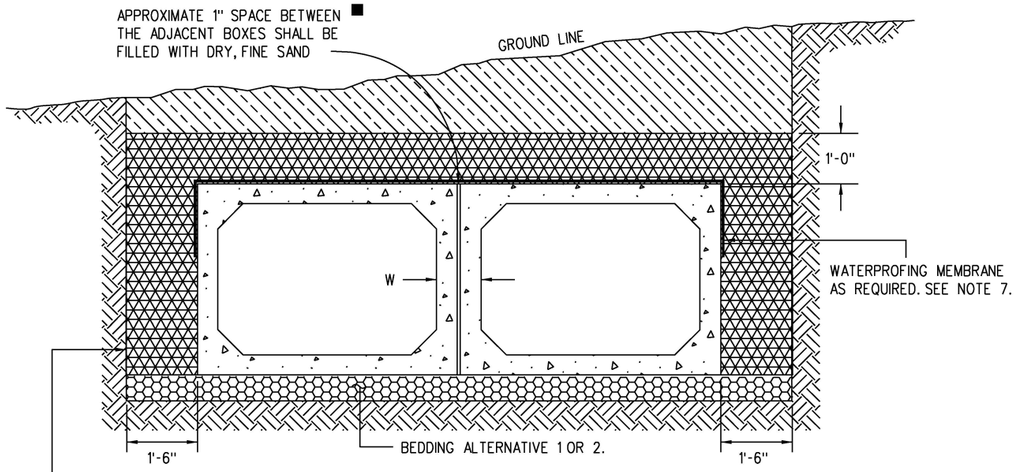

■ GROUT OR FOAM SEALANT SHALL BE USED WHEN SPECIFIED ON THE PLANS.

EXCAVATION & BACKFILL

(DOUBLE PARALLEL PRECAST BOX CULVERT INSTALLATION SHOWN)

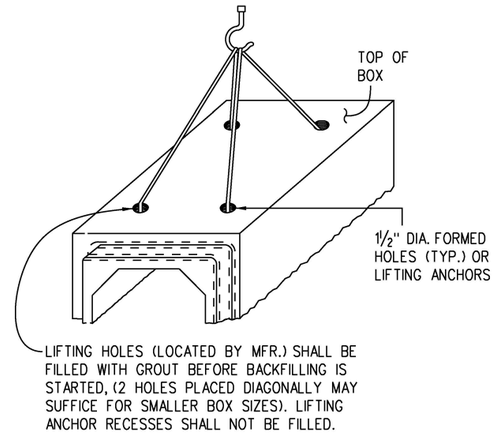

LIFTING

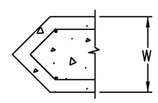

NOSE ANGLE DETAIL

SEE STANDARD PLANS M-601-2, AND 3 TYPICAL AT ADJACENT BOXES DRILL AND GROUT REINFORCING BARS (TYP.)

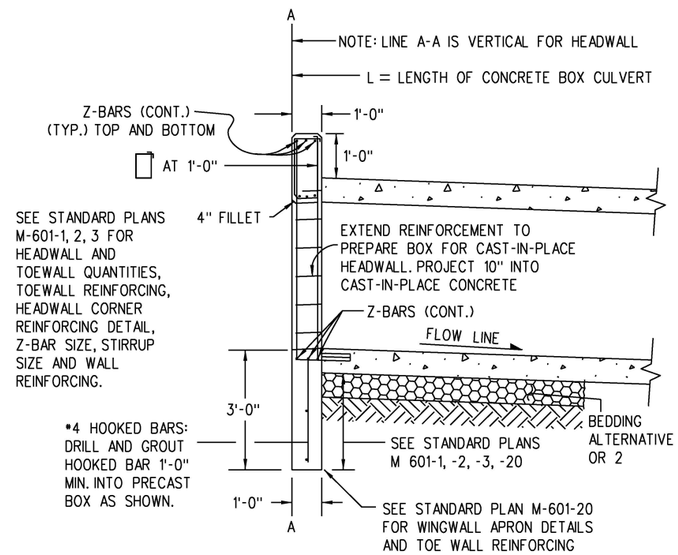

CULVERT END

(WITH HEADWALL)

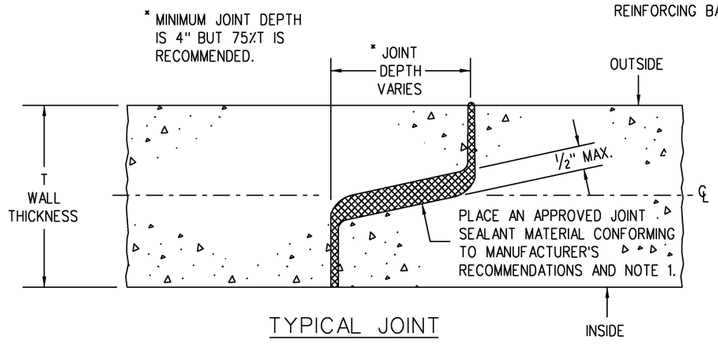

TYPICAL JOINT

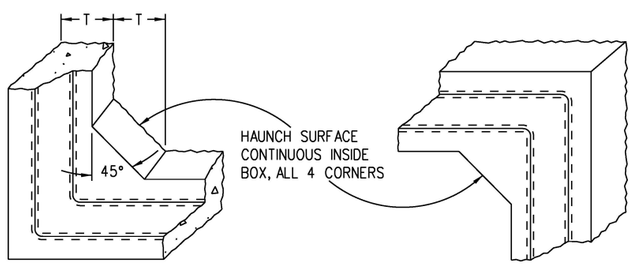

CORNERS

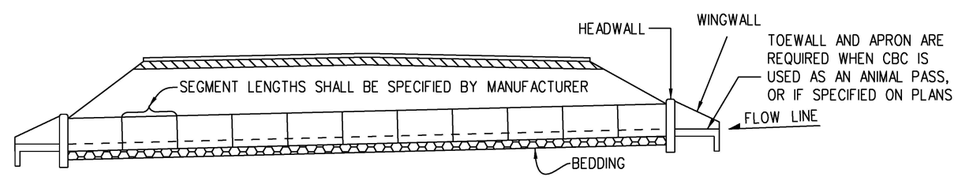

TYPICAL CULVERT INSTALLATION

GENERAL NOTES

1. ALL PRECAST CONCRETE BOX CULVERTS SHALL CONFORM TO THE LRFD DESIGN REQUIREMENTS OF ASTM C 1577, AND THE FOLLOWING SPECIFICATIONS:

ITEM OR CONDITION	AASHTO	EQUIV. ASTM	CDOT SPECIFICATION
PREFORMED JOINT MATERIAL	M 198, 6.1 OR 6.2	C 990, 6.1 OR 6.2	705.01

   ELECTRONICALLY SEALED DESIGN CALCULATIONS, INDEPENDENT CHECK, AND RATING FOR A PRECAST CONCRETE BOX WITH SPANS NOT INCLUDED IN C 1577 SHALL BE PROVIDED BY THE MANUFACTURER IN ACCORDANCE WITH THE CURRENT CDOT BRIDGE DESIGN AND RATING MANUALS.

2. THE CONTRACTOR SHALL SUBMIT ELECTRONICALLY SEALED SHOP DRAWINGS TO THE ENGINEER FOR REVIEW PRIOR TO FABRICATION.

3. BEDDING ALTERNATIVE 1 OR 2 IS REQUIRED:

   BEDDING ALTERNATIVE IS AT THE CONTRACTOR'S OPTION. BEDDING AND EXCAVATION FOR BEDDING WILL NOT BE MEASURED AND PAID FOR SEPARATELY, BUT SHALL BE INCLUDED IN THE WORK.

   BEDDING ALTERNATIVE 1 CONSISTS OF 6 IN. OF AGGREGATE BASE COURSE (CLASS 6) COMPACTED TO NOT LESS THAN 95% MAXIMUM DENSITY DETERMINED IN CONFORMANCE WITH AASHTO T 180.

   BEDDING ALTERNATIVE 2 CONSISTS OF AN 3 IN. THICK, MINIMUM, LEAN CONCRETE BASE. CEMENT CONTENT = 250 LBS./CU. YD.

   AGGREGATE GRADATION FOR ALTERNATIVE 2 BEDDING:

   PASSING 2 IN. SIEVE — 100%
   PASSING NO. 4 SIEVE — 20% TO 70%
   PASSING NO. 200 SIEVE — 5% TO 15%

4. CBC JOINTS USING RUBBER GASKETS SHALL MEET ASTM C1677.

5. CLASS 1 DRAINAGE GEOTEXTILE SHALL BE COMPLETELY WRAPPED AROUND ALL CBC JOINTS WHICH DO NOT HAVE RUBBER GASKETS. THE GEOTEXTILE SHALL EXTEND A MINIMUM OF 1 FT. ON EACH SIDE OF JOINTS AND SHALL OVERLAP AND BE SECURELY ATTACHED FOR AT LEAST 1 FT. AT ITS ENDS. THE WRAP SHALL BE A SMOOTH FIT (NOT LOOSE OR STRETCHED) JUST PRIOR TO BACKFILL. THE GEOTEXTILE MATERIAL SHALL MEET THE APPLICABLE REQUIREMENTS OF SECTION 420. COST FOR GEOTEXTILE WILL NOT BE MEASURED AND PAID FOR SEPARATELY, BUT SHALL BE INCLUDED IN THE WORK.

6. FOR ANY CULVERT SPAN OR COMBINATION OF SPANS FOR MULTIPLE BOXES 20 FEET OR GREATER, A FOUNDATION INVESTIGATION AND REPORT ARE REQUIRED.

7. FOR FILL HEIGHTS LESS THAN 2 FEET, A WATERPROOFING MEMBRANE OR 30 MIL THICK GEOMEMBRANE SHALL BE PROVIDED FOR THE TOP OF THE TOP SLAB AND 18 INCHES DOWN ALONG THE TOPS OF THE EXTERIOR WALLS.

8. SEE M-601-1, 2, AND 3 FOR CAST-IN-PLACE CONCRETE BOX CULVERT DETAILS.

LEGEND

- STRUCTURE EXCAVATION LIMITS
- STRUCTURE BACKFILL, (CLASS 1)
- EMBANKMENT MATERIAL
- EARTH
- BEDDING
- CONCRETE

Computer File Information	
Creation Date: 07/31/19	
Designer Initials: JBK	(R-X)
Last Modification Date: 09/10/20	(R-X)
Detailer Initials: LTA	(R-X)
CAD Ver.: MicroStation V8 Scale: Not to Scale Units: English	(R-X)

Sheet Revisions	
Date:	Comments
09/10/20	Added the Waterproofing Membrane in the "Excavation and Backfill" detail and revised General Note 7. Added ASTM C 1577 design requirements in General Note 1, and revised the table. Added Electronically Sealed requirements in notes 1 and 2. Revised note 6.

Colorado Department of Transportation
2829 West Howard Place
CDOT HQ, 3rd Floor
Denver, CO 80204
Phone: 303-757-9021 FAX: 303-757-9868
Project Development Branch JBK

PRECAST CONCRETE BOX CULVERT

Issued by the Project Development Branch: July 31, 2019

STANDARD PLAN NO.
M-603-3
Standard Sheet No. 1 of 1
Project Sheet Number:

LEGEND

H = ALLOWABLE HEIGHT OF COVER OVER THE TOP OF THE PIPE, EXCLUDING PAVEMENT THICKNESS.

THE MINIMUM COVER SHALL BE THE DIMENSIONS SHOWN IN THE TABLE BELOW OR THE ENTIRE PAVEMENT STRUCTURE THICKNESS AS DEFINED IN SPECIFICATION 101.02, WHICHEVER IS GREATER.

THE MINIMUM COVER IN THE TABLE BELOW IS MEASURED FROM THE TOP OF THE PIPE TO THE BOTTOM OF THE PAVEMENT: HMA OR PCCP

FILL HEIGHTS AND DESIGN ASSUMPTIONS ARE BASED ON AASHTO LRFD BRIDGE DESIGN SPECIFICATIONS, 8TH EDITION, SECTION 12, FOR 900 PSI LONG TERM STRENGTH OF HDPE, AND AASHTO T180 MINIMUM RELATIVE COMPACTION OF 95%.

FILL HEIGHTS ARE BASED ON AASHTO M294 FOR POLYETHYLENE TYPE S PIPES WITH OUTER, CORRUGATED WALLS AND SMOOTH INNER LINEARS.

L_1 = LENGTH OF PIPE TO BE MEASURED WHEN PLACED IN ACCORDANCE WITH SECTION 624.

L_2 = LENGTH OF PIPE TO BE MEASURED WHEN PLACED IN ACCORDANCE WITH SECTION 603.

M = THE MINIMUM SPACING BETWEEN THE OUTSIDE WALLS OF MULTIPLE PIPES OR END SECTIONS IS 18" OR ½(d), WHICHEVER IS GREATER.

d = INNER DIAMETER OF PIPE.

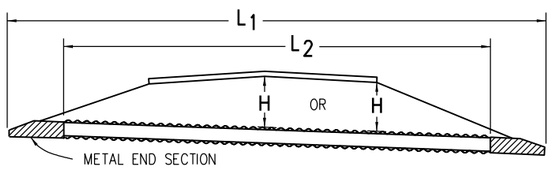

NOTE: USE THE H THAT IS GREATER FOR MAXIMUM ALLOWABLE FILL HEIGHT.

PIPE WITH END SECTIONS

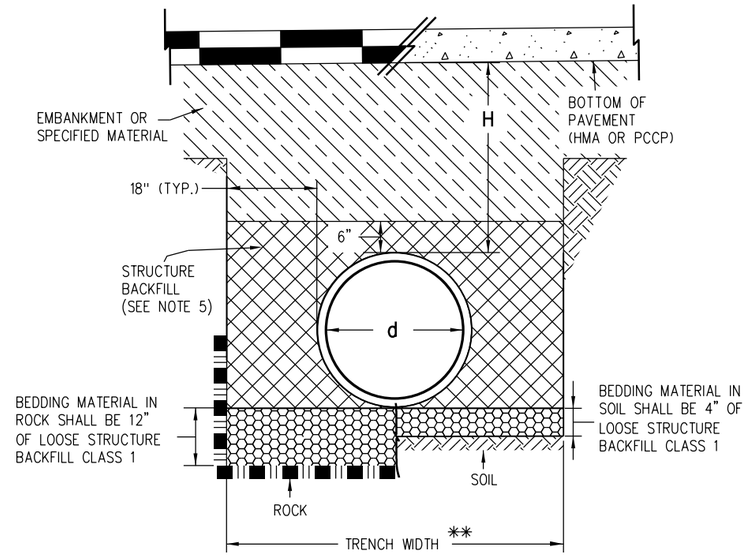

INSTALLATION OF PIPE

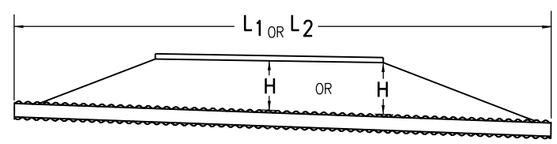

NOTE: USE THE H THAT IS GREATER FOR MAXIMUM ALLOWABLE FILL HEIGHT.

PIPE WITHOUT END SECTIONS

GENERAL NOTES

1. ALL PIPES SHALL MEET THE REQUIREMENTS OF AASHTO M294 FOR POLYETHYLENE TYPE S WITH SMOOTH INNER SURFACE.
2. WHEN A PIPE IS TO BE EXTENDED, THE SAME PIPE MATERIAL AND SIZE AS IN THE ORIGINAL INSTALLATION SHALL BE USED.
3. MINIMUM COVER FOR TEMPORARY/CONSTRUCTION LOADS SHALL BE PROVIDED DURING CONSTRUCTION TO PROTECT THE PIPE FROM DAMAGE AS SHOWN IN THE TABLE. FINAL MAXIMUM COVER HEIGHTS (H) SHALL NOT BE EXCEEDED DURING CONSTRUCTION.
4. WHEN INSTALLING A GUARDRAIL OR A SIGN POST DIRECTLY ABOVE A PIPE, THE POST'S BOTTOM MUST BE AT LEAST 1 FOOT ABOVE THE TOP OF THE PIPE. THE HOLE FOR THE POST SHALL BE DRILLED INTO THE SOIL.
5. STRUCTURE BACKFILL MATERIAL SHALL BE CLASS 1.
6. FOR PIPES 24 INCHES OR LESS IN DIAMETER, H MIN. MAY BE REDUCED TO ONE FOOT FOR LOW VOLUME APPROACH ROADS NOT ON STATE HIGHWAYS.
7. FOR FLOWABLE FILL INSTALLATIONS, REFER TO SECTION 206.02(A). CONTRACTOR SHALL BE RESPONSIBLE TO MAINTAIN PROPER PIPE ALIGNMENT AND PREVENT DISPLACEMENT DUE TO PIPE BOUANCY.

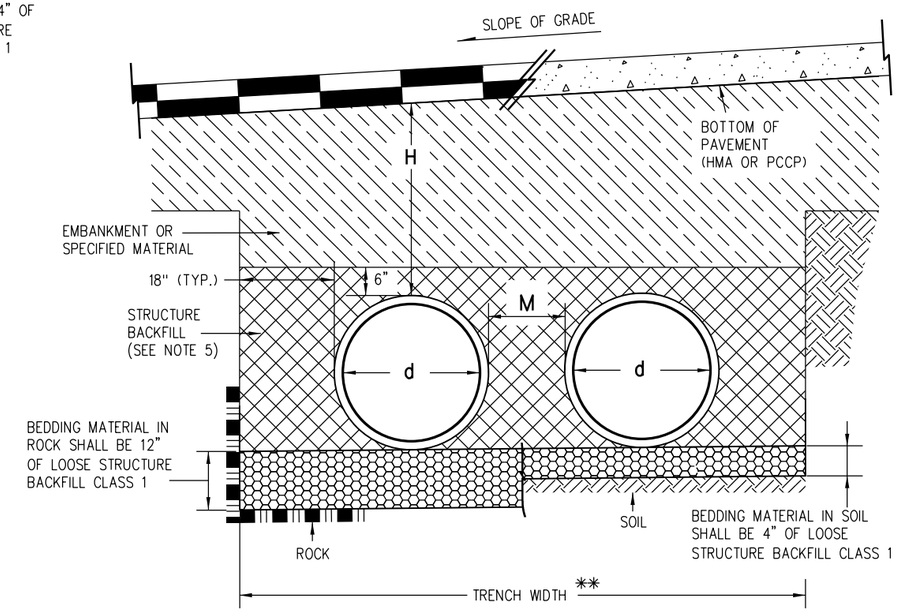

INSTALLATION OF MULTIPLE PIPES

NOTE: M IS 12 INCHES FOR DIAMETERS (d) UP TO AND INCLUDING 24 INCHES AND d/2 FOR GREATER DIAMETERS.

** TRENCH WIDTH ASSUMES STABLE IN-SITU SIDE WALL

HIGH DENISTY POLYETHYLENE (HDPE) FINAL FILL HEIGHTS				
		H MAXIMUM COVER (FT.)		
PIPE DIA. d (IN.)	H MIN. COVER (FT.)	FLOWABLE FILL	CDOT CLASS 3 AND A-1, A-3	CDOT CLASS 1, 2, AND A-2-4, A-2-5
		COMP.	95%	95%
12	1	35	24	17
15	1	38	25	18
18	1	36	24	17
24	1	28	20	14
30	1	28	20	14
36	1	26	18	13
42	1	23	16	11
48	1	25	17	12
54	1	22	16	11
60	2	25	17	12

MINIMUM AND MAXIMUM COVER

NOMINAL PIPE DIAMETER (IN.)	MINIMUM COVER (IN.) FOR INDICATED AXLE LOADS (KIPS)			
	18.0–50.0	50.0–75.0	75.0–110.0	110.0–150.0
24 – 36	24.0	30.0	36.0	36.0
42 – 48	36.0	36.0	42.0	48.0
54 – 60	36.0	36.0	42.0	48.0

MINIMUM COVER FOR CONSTRUCTION LOADS

Computer File Information		Sheet Revisions	
Creation Date: 07/31/19		Date:	Comments
Designer Initials: JBK	(R-X)	03/07/22	Separated the previous M-603-4, Corrugated Polyethylene Pipe (AASHTO M294) and Polypropylene Pipe (AASHTO M330) sheet into 2 sheets. Revised the Legend and Gen. Notes. Deleted the "Construction Minimum Cover for Pipe" detail and incorporated its dimensions in to the tables and Installation of Pipes details.
Last Modification Date: 03/07/22	(R-X)		
Detailer Initials: LTA	(R-X)		
CAD Ver.: MicroStation V8 Scale: Not to Scale Units: English	(R-X)		

Colorado Department of Transportation
2829 West Howard Place
CDOT HQ, 3rd Floor
Denver, CO 80204
Phone: 303-757-9021 FAX: 303-757-9868
Construction Engineering Services JBK

CORRUGATED POLYETHYLENE PIPE (AASHTO M294)

Issued by the Project Development Branch: July 31, 2019

STANDARD PLAN NO.
M-603-4
Standard Sheet No. 1 of 2
Project Sheet Number:

LEGEND

H = ALLOWABLE HEIGHT OF COVER OVER THE TOP OF THE PIPE, EXCLUDING PAVEMENT THICKNESS.

THE MINIMUM COVER SHALL BE THE DIMENSIONS SHOWN IN THE TABLE BELOW OR THE ENTIRE PAVEMENT STRUCTURE THICKNESS AS DEFINED IN SPECIFICATION 101.02, WHICHEVER IS GREATER.

THE MINIMUM COVER IN THE TABLE BELOW IS MEASURED FROM THE TOP OF THE PIPE TO THE BOTTOM OF THE PAVEMENT: HMA OR PCCP

FILL HEIGHTS AND DESIGN ASSUMPTIONS ARE BASED ON AASHTO LRFD BRIDGE DESIGN SPECIFICATIONS, 8TH EDITION, SECTION 12, AND AASHTO T180 MINIMUM RELATIVE COMPACTION OF 95%.

FILL HEIGHTS ARE BASED ON AASHTO M330 FOR POLYPROPYLENE TYPE S PIPES WITH OUTER, CORRUGATED WALLS AND SMOOTH INNER LINEARS.

L_1 = LENGTH OF PIPE TO BE MEASURED WHEN PLACED IN ACCORDANCE WITH SECTION 624.

L_2 = LENGTH OF PIPE TO BE MEASURED WHEN PLACED IN ACCORDANCE WITH SECTION 603.

M = THE MINIMUM SPACING BETWEEN THE OUTSIDE WALLS OF MULTIPLE PIPES OR END SECTIONS IS 18" OR ½(d), WHICHEVER IS GREATER.

d = INNER DIAMETER OF PIPE.

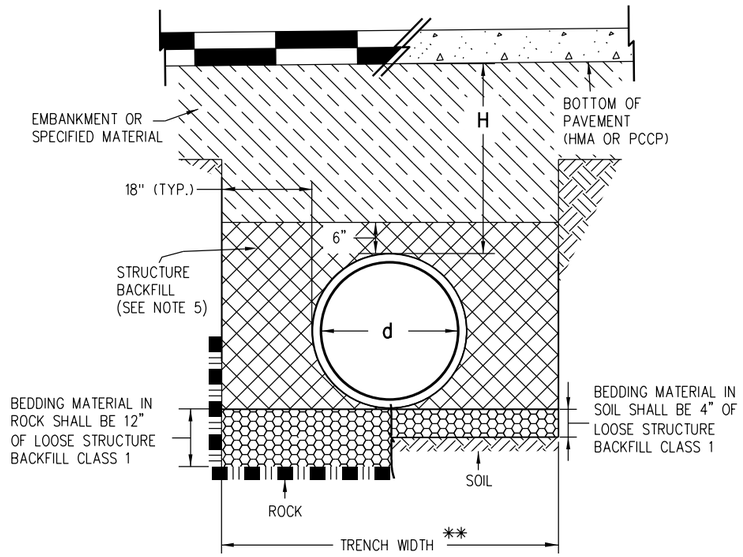

INSTALLATION OF PIPE

GENERAL NOTES

1. ALL PIPES SHALL MEET THE REQUIREMENTS OF AASHTO M330 FOR POLYPROPYLENE TYPE S FOR POLYPROPYLENE PIPE (PP) WITH SMOOTH INNER SURFACE.
2. WHEN A PIPE IS TO BE EXTENDED, THE SAME PIPE MATERIAL AND SIZE AS IN THE ORIGINAL INSTALLATION SHALL BE USED.
3. MINIMUM COVER FOR TEMPORARY/CONSTRUCTION LOADS SHALL BE PROVIDED DURING CONSTRUCTION TO PROTECT THE PIPE FROM DAMAGE AS SHOWN THE IN TABLE. FINAL MAXIMUM COVER HEIGHTS (H) SHALL NOT BE EXCEEDED DURING CONSTRUCTION.
4. WHEN INSTALLING A GUARDRAIL OR A SIGN POST DIRECTLY ABOVE A PIPE, THE POST'S BOTTOM MUST BE AT LEAST 1 FOOT ABOVE THE TOP OF THE PIPE. THE HOLE FOR THE POST SHALL BE DRILLED INTO THE SOIL.
5. STRUCTURE BACKFILL MATERIAL SHALL BE CLASS 1.
6. FOR PIPES 24 INCHES OR LESS IN DIAMETER, H MIN. MAY BE REDUCED TO ONE FOOT FOR LOW VOLUME APPROACH ROADS NOT ON STATE HIGHWAYS.
7. FOR FLOWABLE FILL INSTALLATIONS, REFER TO SECTION 206.02(A). CONTRACTOR SHALL BE RESPONSIBLE TO MAINTAIN PROPER PIPE ALIGNMENT AND PREVENT DISPLACEMENT DUE TO PIPE BOUANCY.

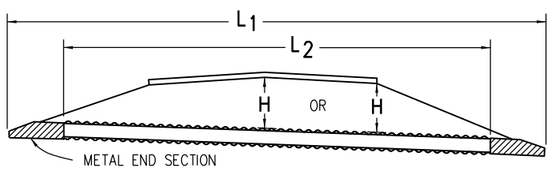

NOTE: USE THE H THAT IS GREATER FOR MAXIMUM ALLOWABLE FILL HEIGHT.

PIPE WITH END SECTIONS

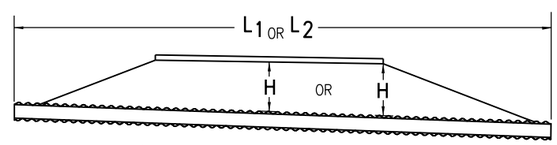

NOTE: USE THE H THAT IS GREATER FOR MAXIMUM ALLOWABLE FILL HEIGHT.

PIPE WITHOUT END SECTIONS

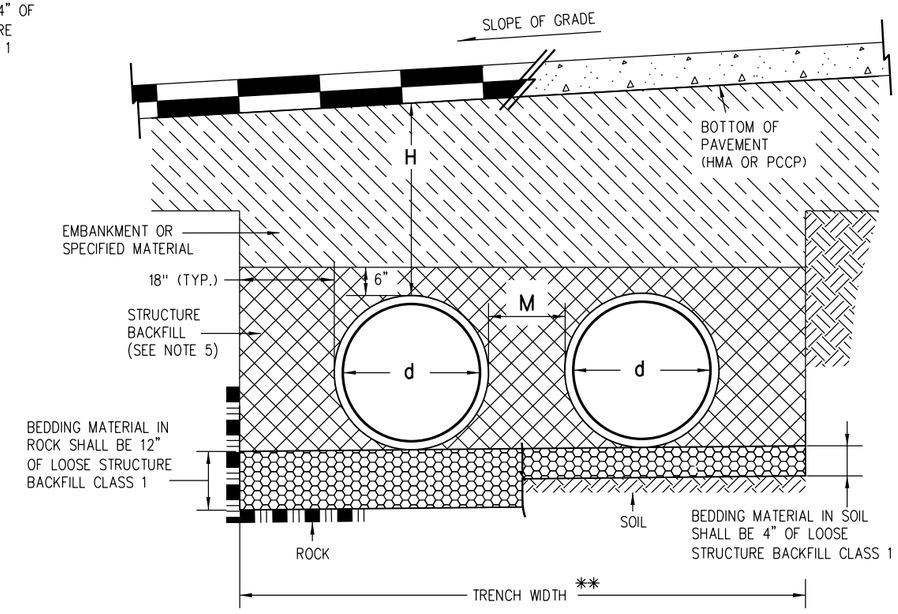

INSTALLATION OF MULTIPLE PIPES

NOTE: M IS 12 INCHES FOR DIAMETERS (d) UP TO AND INCLUDING 24 INCHES AND d/2 FOR GREATER DIAMETERS.

** TRENCH WIDTH ASSUMES STABLE IN-SITU SIDE WALL

POLYPROPYLENE (PP) FINAL FILL HEIGHTS				
		H MAXIMUM COVER (FT.)		
PIPE DIA. d (IN.)	H MIN. COVER (FT.)	FLOWABLE FILL	CDOT CLASS 3 AND A-1, A-3	CDOT CLASS 1, 2, AND A-2-4, A-2-5
		COMP.	95%	95%
12	1	41	28	20
15	1	42	29	21
18	1	44	30	22
24	1	30	21	16
30	1	39	27	19
36	1	28	20	14
42	1	30	21	15
48	1	29	20	14
60	2	29	20	14

MINIMUM AND MAXIMUM COVER

NOMINAL PIPE DIAMETER (IN.)	MINIMUM COVER (IN.) FOR INDICATED AXLE LOADS (KIPS)			
	18.0–50.0	50.0–75.0	75.0–110.0	110.0–150.0
24 – 36	24.0	30.0	36.0	36.0
42 – 48	36.0	36.0	42.0	48.0
54 – 60	36.0	36.0	42.0	48.0

MINIMUM COVER FOR CONSTRUCTION LOADS

Computer File Information	
Creation Date: 07/31/19	
Designer Initials: JBK	(R-X)
Last Modification Date: 03/07/22	(R-X)
Detailer Initials: LTA	(R-X)
CAD Ver.: MicroStation V8 Scale: Not to Scale Units: English	(R-X)

Sheet Revisions	
Date:	Comments
03/07/22	Separated the previous M-603-4, Corrugated Polyethylene Pipe (AASHTO M294) and Polypropylene Pipe (AASHTO M330) sheet into 2 sheets. Revised the Legend and Gen. Notes. Deleted the "Construction Minimum Cover for Pipe" detail and incorporated its dimensions in to the tables and Installation of Pipes details.

Colorado Department of Transportation
2829 West Howard Place
CDOT HQ, 3rd Floor
Denver, CO 80204
Phone: 303-757-9021 FAX: 303-757-9868
Construction Engineering Services JBK

CORRUGATED POLYPROPYLENE PIPE (AASHTO M330)

Issued by the Project Development Branch: July 31, 2019

STANDARD PLAN NO.
M-603-4
Standard Sheet No. 2 of 2
Project Sheet Number:

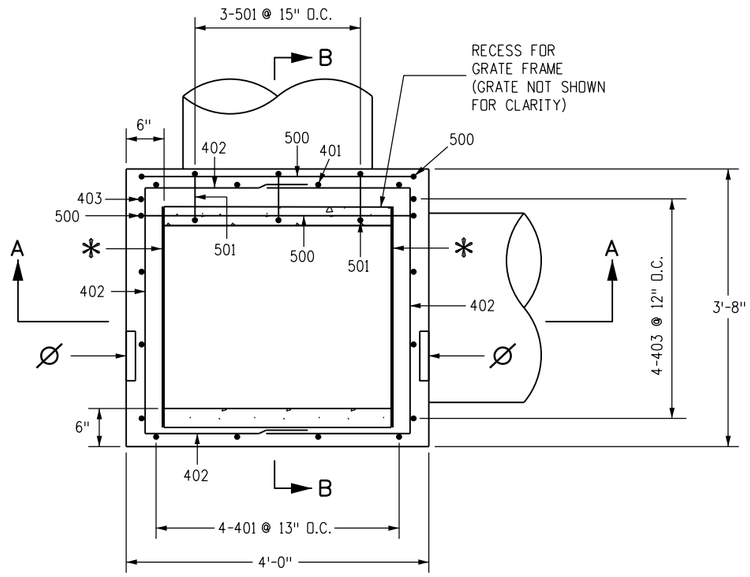

PLAN

GENERAL NOTES

1. FOR THE 32 INCH AND 36 INCH INSIDE INLET DIMENSIONS, THE ALLOWABLE PIPE I.D. IS 30 INCHES OR LESS. FOR THE 72 INCH INSIDE INLET DIMENSION, THE ALLOWABLE PIPE I.D. IS "H" MINUS 18 INCHES, OR LESS, UP TO A MAXIMUM OF 66 INCHES FOR "H" OF 7 FEET OR MORE.
2. ALL CONCRETE SHALL BE CLASS B.
3. INLET MAY BE CAST-IN-PLACE OR PRECAST.
4. REINFORCING BARS SHALL BE #4 UNLESS SHOWN OTHERWISE.
5. ALL REINFORCING BARS SHALL BE GRADE 60 AND EPOXY COATED. REINFORCING BARS SHALL HAVE A MINIMUM CLEARANCE OF 2 IN.
6. ALL EDGE DISTANCES NOT MARKED "CLEAR" ARE TO THE CENTERLINE OF THE BAR.
7. CUT OR BEND REINFORCING BARS AROUND PIPES AS REQUIRED.
8. STEPS SHALL BE REQUIRED WHEN THE INLET DEPTH "H" IS EQUAL TO OR GREATER THAN 4 FT. AND SHALL CONFORM TO AASHTO M 199.
9. THE INVERT OF THE BOX SHALL BE SLOPED TO DRAIN.
10. THE CONTRACTOR SHALL STAMP FLOW ARROWS INTO THE TOP SURFACE OF THE INLET BOX SIDEWALLS TO INDICATE THE DIRECTION OF RUNOFF. THE STAMPED ARROWS SHALL BE 6 IN. LONG, 1 IN. HIGH, AND 3/8 IN. DEEP. FOR INLETS IN SUMP CONDITIONS, THE STAMPED FLOW ARROWS SHALL INDICATE THE PREDOMINATE DIRECTION OF RUNOFF FLOW.
11. A 4 IN. DIA. STAINLESS STEEL MEDALLION WITH "NO DUMPING DRAINS TO STREAM" OR SIMILAR MESSAGE SHALL BE FIRMLY ATTACHED TO TOP OF THE INLET SURFACE WITH A PERMANENT FASTENER. THE MEDALLION WILL HAVE A FISH SYMBOL AND BLUE COLOR BACKGROUND. ALTERNATIVELY, THIS MESSAGE MAY BE CAST WITH 1 IN. HEIGHT LETTERS INTO THE TOP OF THE INLET'S CONCRETE SURFACE OR SURROUNDING CONCRETE APRON. THE NO DUMPING MESSAGE SHALL BE ELIMINATED FOR INLETS LOCATED WITHIN THE SHOULDER OF CONTROLLED ACCESS FREEWAYS WHEN SPECIFIED IN THE PLANS.

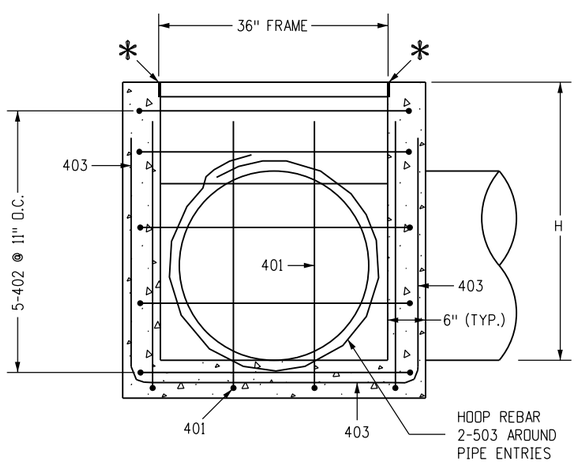

SECTION A-A

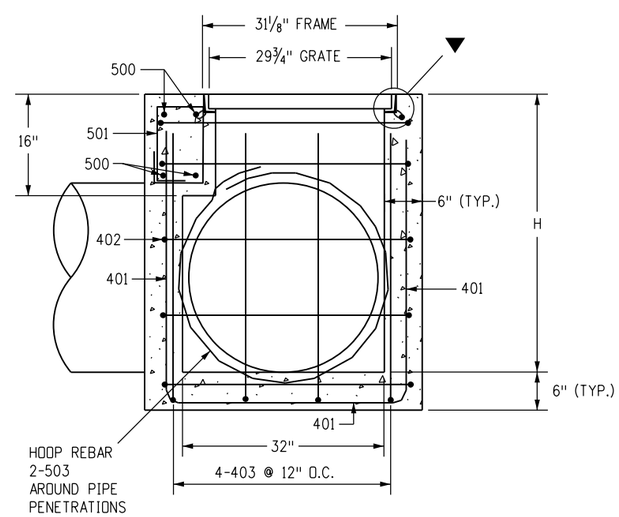

SECTION B-B

LEGEND

▼ GRATE TO BE INSTALLED DURING CONSTRUCTION OF THE BOX WITH THE VANE GRATE BOLTED IN PLACE TO THE FRAME.

* TO FACILITATE REMOVAL OF THE GRATE, PLACE PLYWOOD 3 IN. x 1/4 IN. x 31-3/8 IN. ALONG EDGE OF THE GRATE AS SHOWN.

Ø FLOW ARROW STAMP IN DIRECTION OF FLOW (TYP.). FLOW →

Computer File Information		Sheet Revisions	
Creation Date: 07/31/19		Date:	Comments
Designer Initials: JBK	(R-X)		
Last Modification Date: 02/03/23	(R-X)		
Detailer Initials: LTA	(R-X)		
CAD Ver.: MicroStation V8 Scale: Not to Scale Units: English	(R-X)		

Colorado Department of Transportation
2829 West Howard Place
CDOT HQ, 3rd Floor
Denver, CO 80204
Phone: 303-757-9021 FAX: 303-757-9868
Construction Engineering Services JBK

VANE GRATE INLET

Issued by the Project Development Branch: July 31, 2019

STANDARD PLAN NO.
M-604-25
Standard Sheet No. 1 of 5
Project Sheet Number:

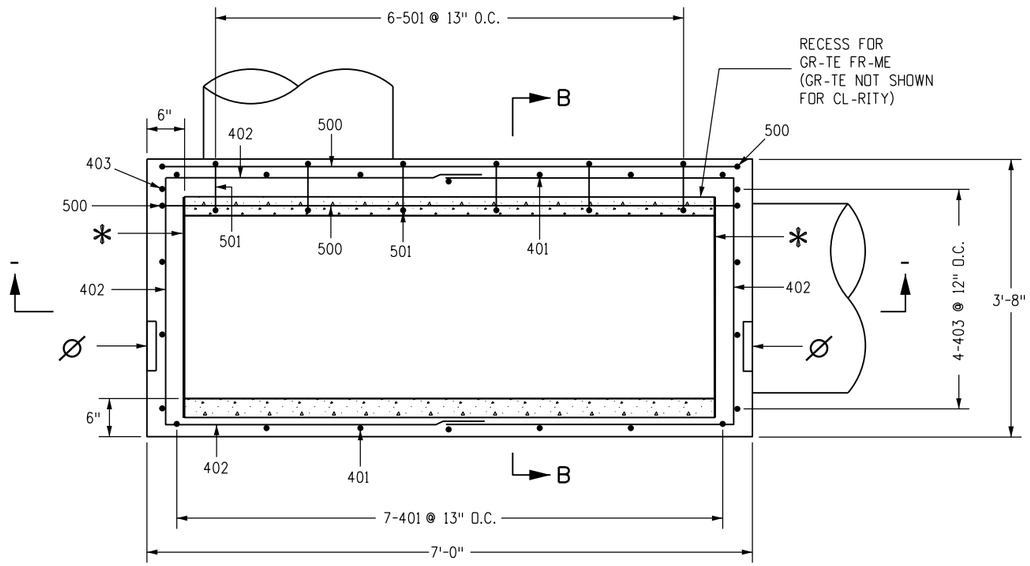

PL-N

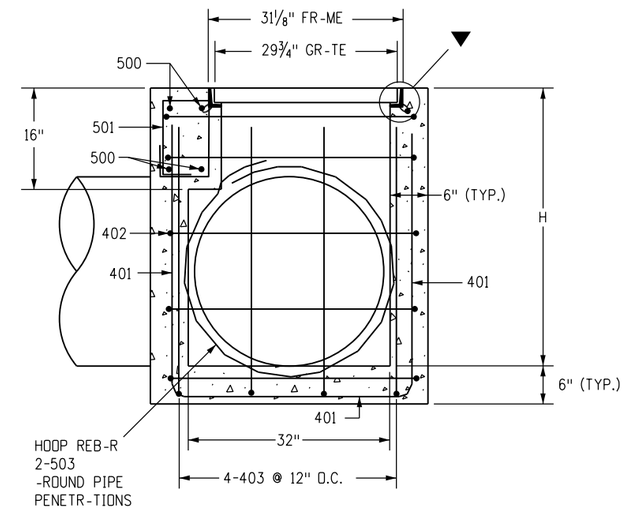

SECTION B-B

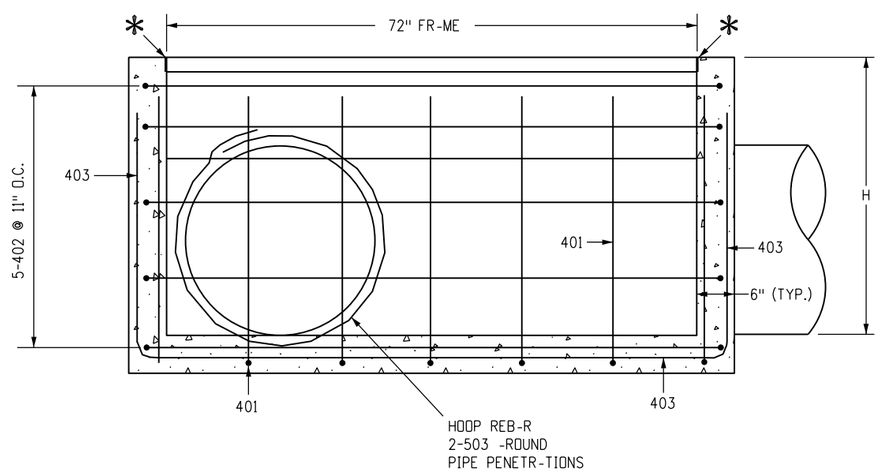

SECTION -C-

LEGEND

▼ GR-TE TO BE INST-LLED DURING CONSTRUCTION OF THE BOX WITH THE V-NE GR-TE BOLTED IN PL-CE TO THE FR-ME.

* TO F-CILIT-TE REMOV-L OF THE GR-TE, PL-CE PLYWOOD 3 IN. x 1/4 IN. x 31-3/8 IN. -LONG EDGE OF THE GR-TE -S SHOWN.

Ø FLOW -RROW ST-MP IN DIRECTION OF FLOW (TYP.). FLOW →

Computer File Information		Sheet Revisions	
Creation Date: 07/31/19		Date:	Comments
Designer Initials: JBK	R-X		
Last Modification Date: 02/03/23	R-X		
Detailer Initials: LTA	R-X		
C-D Ver.: MicroStation V8 Scale: Not to Scale Units: English	R-X		

Colorado Department of Transportation
2829 West Howard Place
CDOT HQ, 3rd Floor
Denver, CO 80204
Phone: 303-757-9021 FAX: 303-757-9868
Construction Engineering Services JBK

VANE GRATE INLET

Issued by the Project Development Branch: July 31, 2019

STANDARD PLAN NO.
M-604-25
Standard Sheet No. 2 of 5
Project Sheet Number:

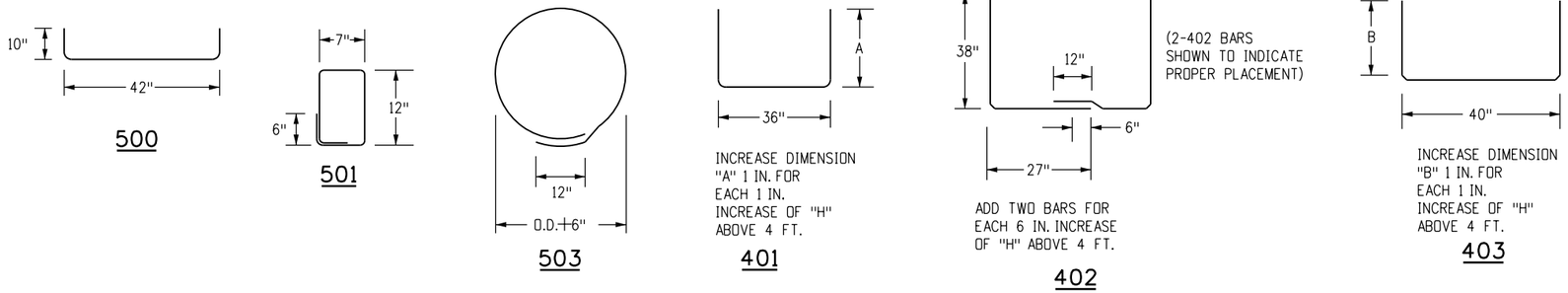

36 IN. INLET BOX BENDING DIAGRAM

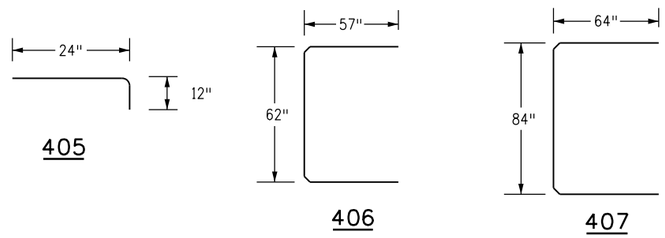

INLET APRON BENDING DIAGRAM FOR 36 IN. INLET

MARK	NO. REQ'D	LENGTH (EACH)
405	9	3'-0"
406	1	14'-8"
407	1	17'-8"

BAR LIST FOR CONCRETE APRON

(FOR INFORMATION ONLY)

MARK	NO. REQ'D	HEIGHT "A"	HEIGHT "B"	LENGTH (EACH)
500	4			5'-2"
501	3			4"-2"
503	4			10'-5"
401	4	3'-10"		10'-8"
402	10			7'-8"
403	4		4'-0"	11'-4"

BAR LIST FOR H = 4'-0" 36 IN. INLET

NOTES

1. CONCRETE QUANTITY INCLUDES VOLUME OCCUPIED BY PIPES.
2. REINFORCING STEEL QUANTITY ASSUMES TWO 503 HOOPS FOR EACH 24 INCH PIPE AND A 4 INCH PIPE WALL. ADJUST THE LENGTH AND QUANTITIES FOR 503 USED WITH DIFFERENT PIPE DIAMETERS AND INCLUDE IN THE COST OF THE INLET.
3. BARS NUMBERED IN 400 SERIES INDICATES #4 SIZE BAR. BARS NUMBERED IN 500 SERIES INDICATES #5 SIZE BAR.
4. ALL REINFORCING BARS SHALL BE GRADE 60 AND EPOXY COATED.

QUANTITIES FOR ONE 36 IN. INLET

H	NUMBER OF STEPS REQUIRED	CONC. CU. YD.	STEEL LBS.
4'-0"	1	1.3	180
4'-6"	2	1.5	186
5'-0"	2	1.6	201
5'-6"	2	1.7	207
6'-0"	3	1.8	222
6'-6"	3	1.9	227
7'-0"	3	2.1	243
7'-6"	4	2.2	248
8'-0"	4	2.3	263
8'-6"	4	2.4	269
9'-0"	5	2.5	285
9'-6"	5	2.7	289
10'-0"	5	2.8	306
10'-6"	6	2.9	310
11'-0"	6	3.0	326
11'-6"	6	3.1	331

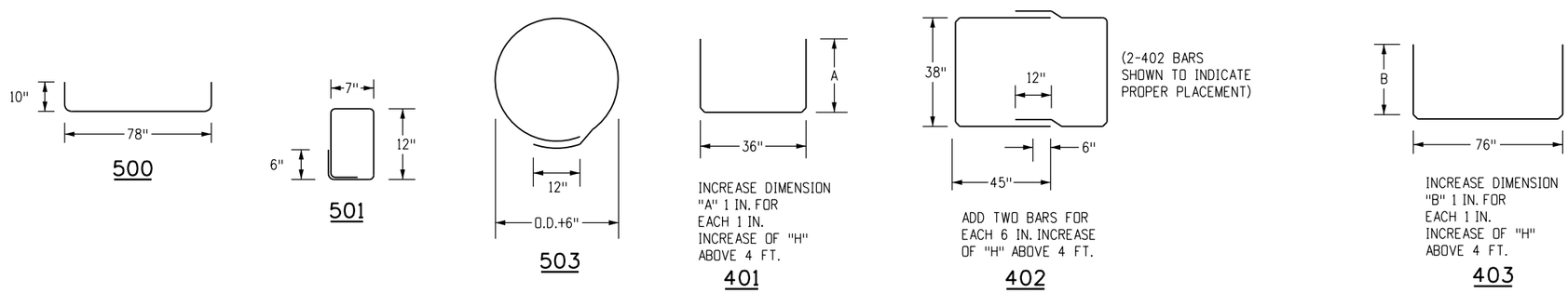

72 IN. INLET BOX BENDING DIAGRAM

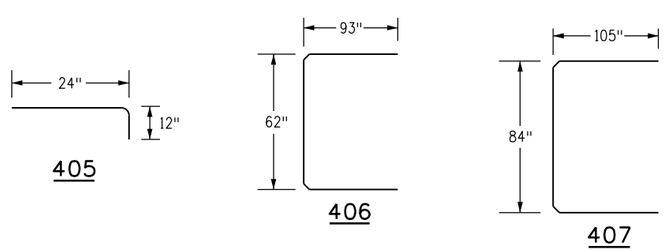

INLET APRON BENDING DIAGRAM FOR 72 IN. INLET

MARK	NO. REQ'D	LENGTH (EACH)
405	13	3'-0"
406	1	20'-8"
407	1	24'-6"

BAR LIST FOR CONCRETE APRON

(FOR INFORMATION ONLY)

MARK	NO. REQ'D	HEIGHT "A"	HEIGHT "B"	LENGTH (EACH)
500	4			8'-2"
501	6			4'-2"
503	4			10'-5"
401	7	3'-10"		10'-8"
402	10			10'-8"
403	4		4'-0"	14'-4"

BAR LIST FOR H = 4'-0" 72 IN. INLET

QUANTITIES FOR ONE 72 IN. INLET

H	NUMBER OF STEPS REQUIRED	CONC. CU. YD.	STEEL LBS.
4'-0"	1	2.1	253
4'-6"	2	2.3	260
5'-0"	2	2.4	282
5'-6"	2	2.6	289
6'-0"	3	2.8	310
6'-6"	3	3.0	318
7'-0"	3	3.2	339
7'-6"	4	3.3	346
8'-0"	4	3.5	369
8'-6"	4	3.7	376
9'-0"	5	3.9	397
9'-6"	5	4.1	405
10'-0"	5	4.2	426
10'-6"	6	4.4	433
11'-0"	6	4.6	455
11'-6"	6	4.8	462

Computer File Information		Sheet Revisions	
Creation Date: 07/31/19		Date:	Comments
Designer Initials: JBK	R-X	02/03/23	Revised Note 2.
Last Modification Date: 02/03/23	R-X		
Detailer Initials: LTA	R-X		
CAD Ver.: MicroStation V8 Scale: Not to Scale Units: English	R-X		

Colorado Department of Transportation
2829 West Howard Place
CDOT HQ, 3rd Floor
Denver, CO 80204
Phone: 303-757-9021 FAX: 303-757-9868
Construction Engineering Services JBK

VANE GRATE INLET

Issued by the Project Development Branch: July 31, 2019

STANDARD PLAN NO.
M-604-25
Standard Sheet No. 3 of 5
Project Sheet Number:

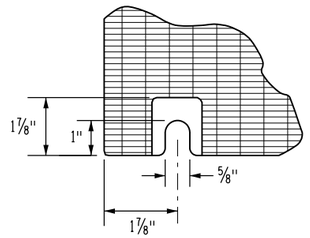

DET-IL -

BOLT SLOT -T CORNER (TYP.)

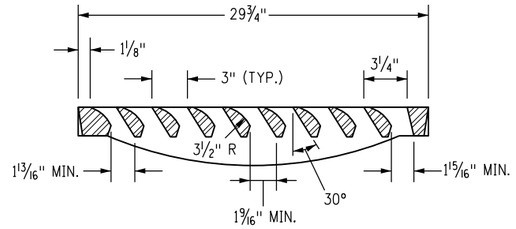

SECTION --

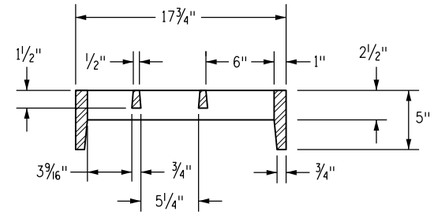

SECTION B-B

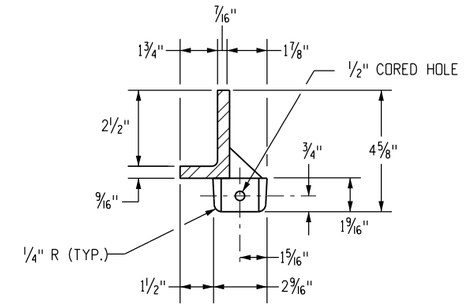

DET-IL B

NOTES

1. FREE OPEN -RE-: 190 SQ. IN./GR-TE.
2. M-TERI-L: C-ST GR-Y IRON -STM --48 CL-SS 35B.
3. FINISH: NO P-INT.
4. WEIGHT: GR-TE 170 LBS. E-CH; FR-ME 29 LBS. E-CH.
5. -LL REINFORCING B-RS SH-LL BE EPOXY CO-TED.

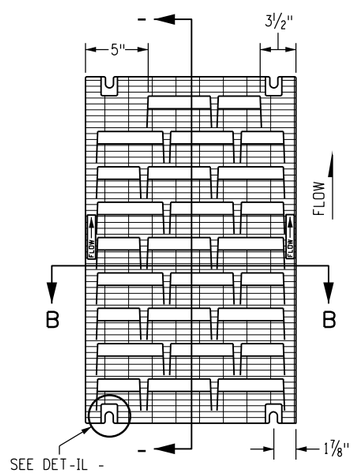

GR-TE PL-N

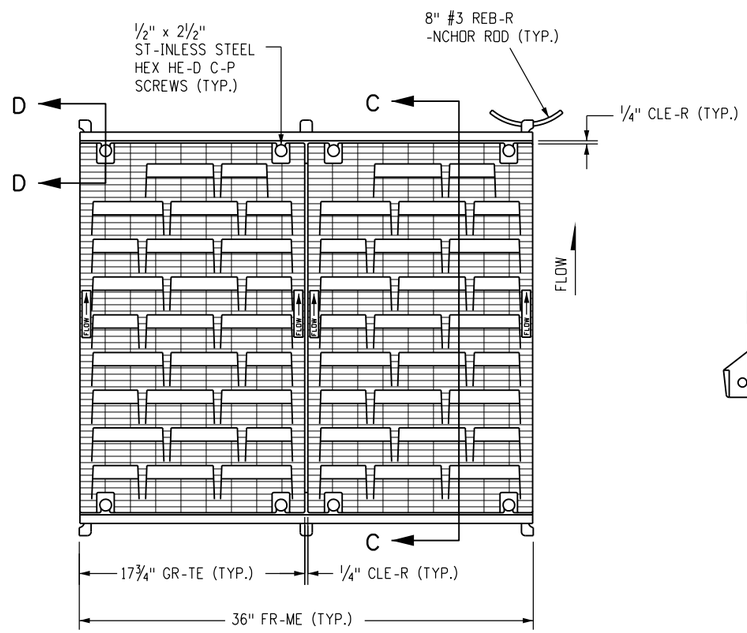

MULTIPLE GR-TE WITH FR-ME PL-N

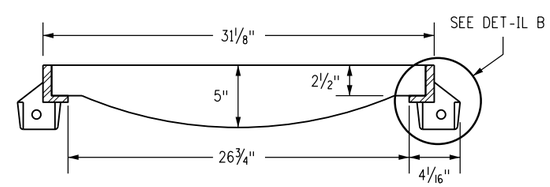

SECTION C-C

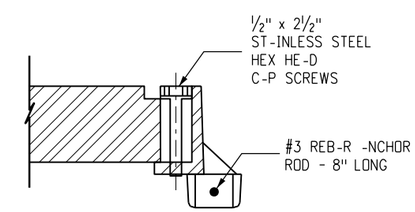

SECTION D-D

Computer File Information		Sheet Revisions	
		Date:	Comments
Creation Date: 07/31/19			
Designer Initials: JBK	(R-X)		
Last Modification Date: 02/03/23	(R-X)		
Detailer Initials: LTA	(R-X)		
C-D Ver.: MicroStation V8 Scale: Not to Scale Units: English	(R-X)		

Colorado Department of Transportation
2829 West Howard Place
CDOT HQ, 3rd Floor
Denver, CO 80204
Phone: 303-757-9021 FAX: 303-757-9868
Construction Engineering Services JBK

VANE GRATE INLET

Issued by the Project Development Branch: July 31, 2019

STANDARD PLAN NO.

M-604-25

Standard Sheet No. 4 of 5

Project Sheet Number:

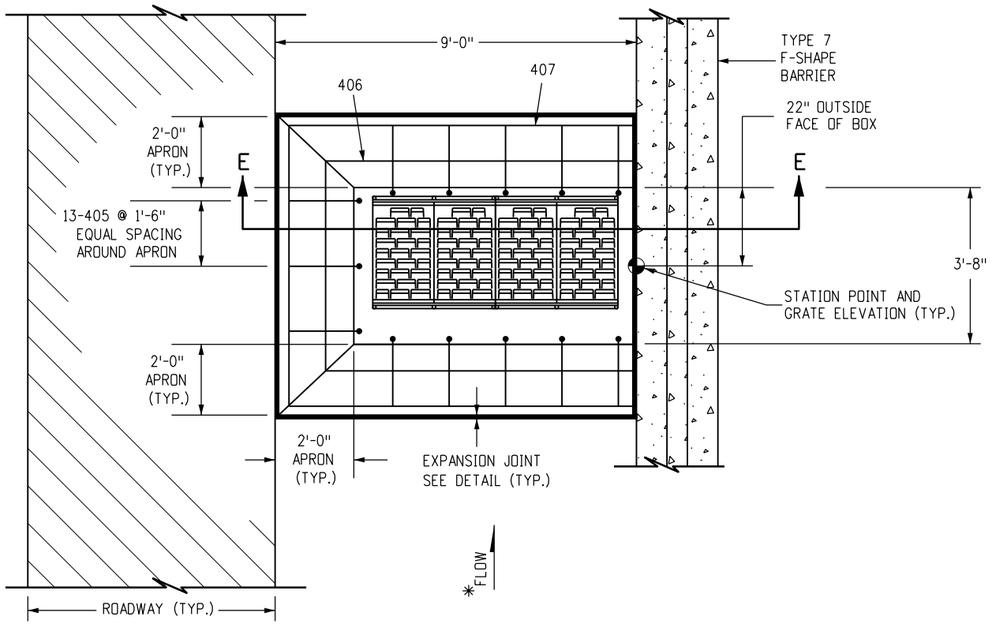

CONCRETE APRON FOR 72 IN. INLET

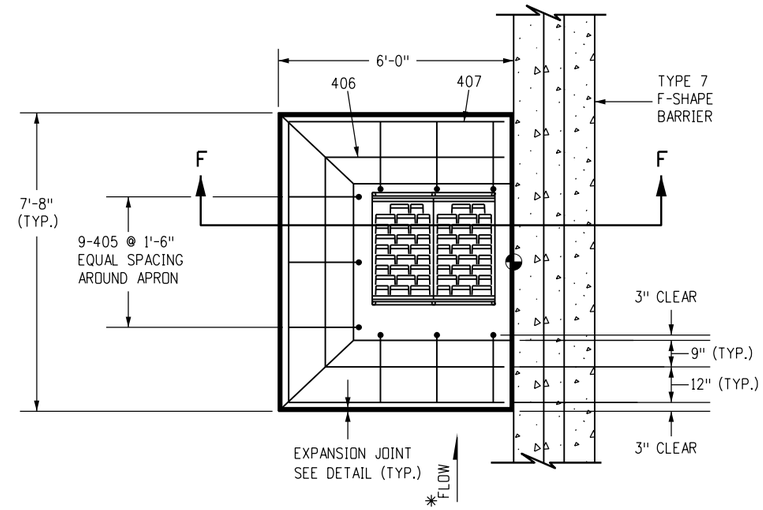

CONCRETE APRON FOR 36 IN. INLET

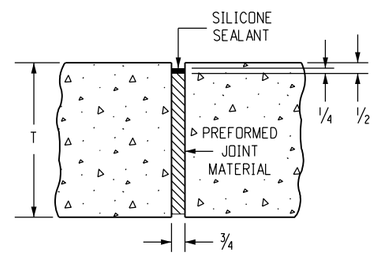

EXPANSION JOINT (TYP.)

NOTES

1. A 2 FT. CONCRETE TRANSITION APRON SHALL BE CONSTRUCTED AS SHOWN AND SHALL BE KEYED INTO THE INLET.
2. CONCRETE APRON SHALL BE THE SAME THICKNESS AND TYPE AS THE SURROUNDING CONCRETE.
3. THE COST OF THE CONCRETE APRON SHALL BE INCLUDED THE COST OF THE INLET.

* IF THE INLET IS OFFSET FROM THE BARRIER, SLOPE THE APRON ADJACENT TO THE BARRIER TO DIRECT FLOW TOWARD THE GRATE.

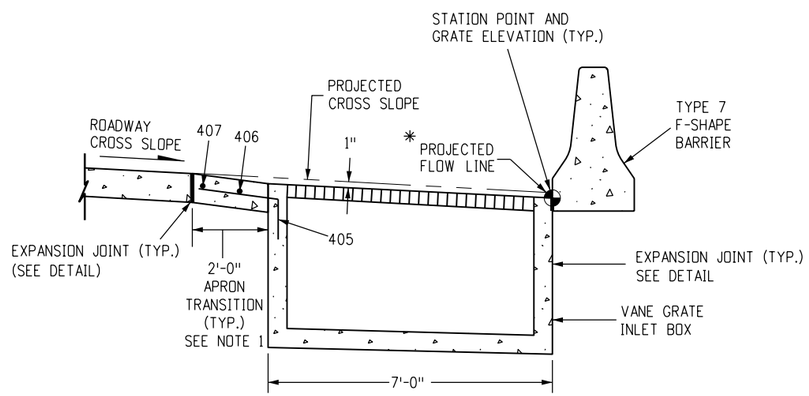

SECTION E-E

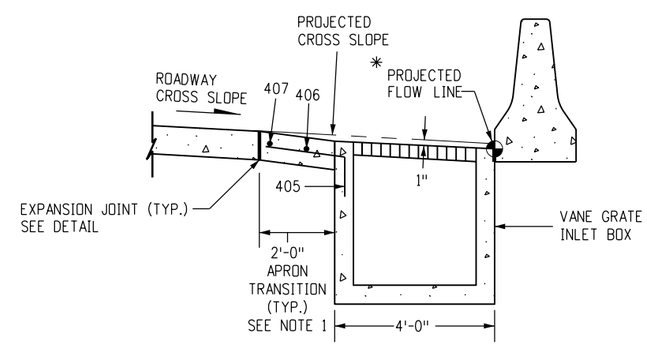

SECTION F-F

Computer File Information		Sheet Revisions	
Creation Date: 07/31/19		Date:	Comments
Designer Initials: JBK	(R-X)		
Last Modification Date: 02/03/23	(R-X)		
Detailer Initials: LTA	(R-X)		
CAD Ver.: MicroStation V8 Scale: Not to Scale Units: English	(R-X)		

Colorado Department of Transportation
2829 West Howard Place
CDOT HQ, 3rd Floor
Denver, CO 80204
Phone: 303-757-9021 FAX: 303-757-9868
Construction Engineering Services JBK

VANE GRATE INLET

Issued by the Project Development Branch: July 31, 2019

STANDARD PLAN NO.
M-604-25
Standard Sheet No. 5 of 5
Project Sheet Number:

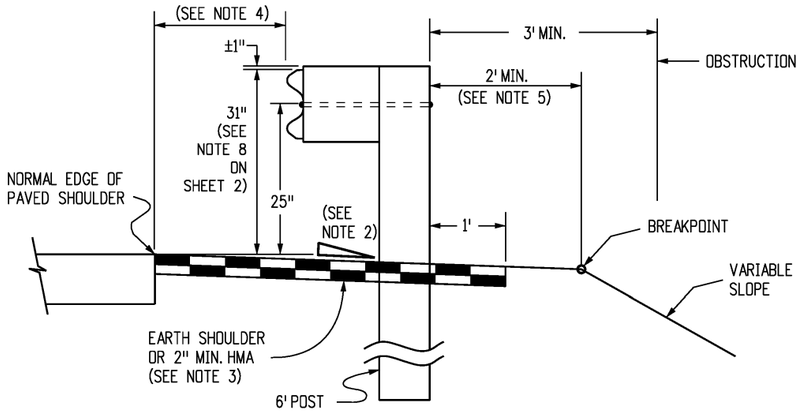

NORMAL ROADSIDE INSTALLATION WHEN FILL REQUIRES GUARDRAIL

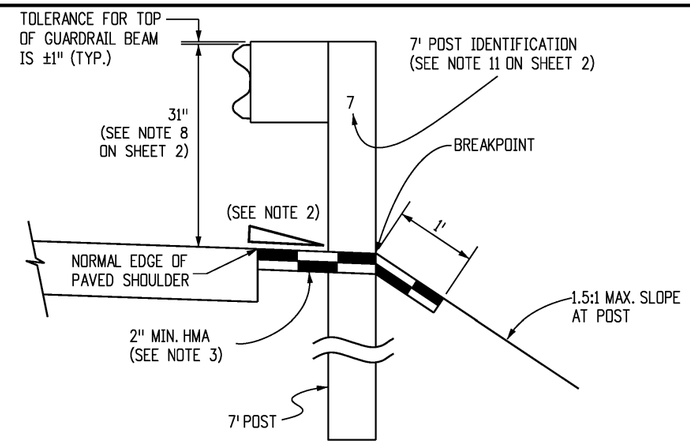

RESTRICTIVE ROADSIDE INSTALLATION WITH 7 FOOT GUARDRAIL POSTS

(SEE NOTE 5)

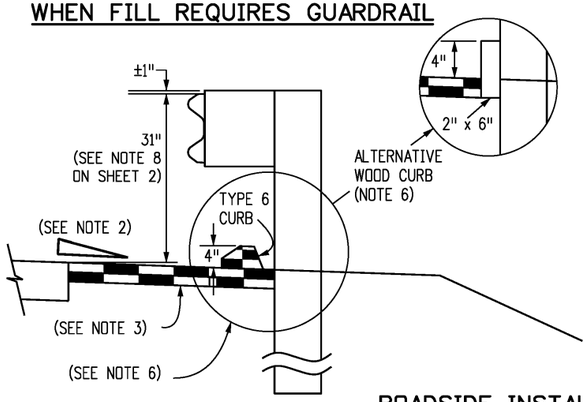

OPTION A

ROADSIDE INSTALLATION WITH EROSION CONTROL CURB

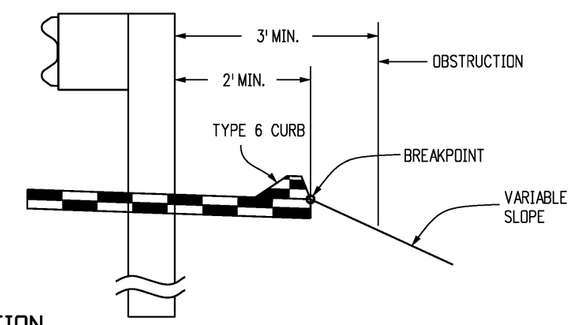

OPTION B (PREFERRED)

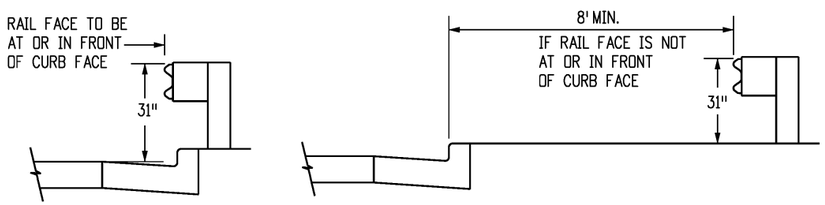

URBAN ROADSIDE INSTALLATION WITH CURB AND GUTTER

LOCATION	SPACING
ALL LOCATIONS EXCEPT BRIDGE RAIL LOCATIONS	6'-3"
BRIDGE OR STRUCTURE APPROACH	SEE SHEETS 11 & 19

NORMAL CENTER-TO-CENTER POST SPACING

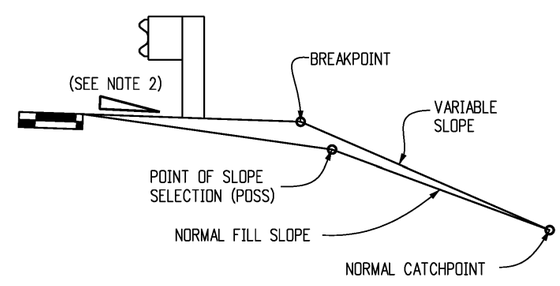

EMBANKMENT WITH GUARDRAIL

(NOTE: THE CATCHPOINT REMAINS THE SAME AS THAT FOR "NORMAL" FILL SLOPE. FOR THE WIDER "Z" DISTANCES, THE VARIABLE SLOPE MAY "CATCH" AT THE POSS.)

GENERAL NOTES (CONTINUE ON SHEET 2)

1. ALL GUARDRAILS SHOWN ARE MASH 2016 TL-3 COMPLIANT.
2. RATE OF SLOPE DEPENDS ON GUARDRAIL LOCATION:
   A. FOR GUARDRAIL FACE 2 FT. OR LESS FROM THE NORMAL EDGE OF PAVED SHOULDER, CONTINUE THE RATE OF SLOPE OF THE NORMAL PAVED SHOULDER TO THE BREAKPOINT.
   B. FOR GUARDRAIL FACE MORE THAN 2 FT. FROM THE NORMAL EDGE OF THE PAVED SHOULDER, THE SLOPE SHALL BE 10:1 OR FLATTER.
3. WHEN SPECIFIED ON THE PLANS, EXTEND A 2 IN. MINIMUM THICKNESS PAVED SURFACE TO 1 FT. BEHIND THE GUARDRAIL POSTS OR TO THE EROSION CONTROL CURB AS SHOWN ON PLANS. ASPHALT CUTTING & PATCHING OR OTHER APPROVED METHOD SHALL BE USED TO MINIMIZE DAMAGE TO ALL PAVED SURFACES UNDER GUARDRAIL INSTALLATIONS. ALL REPAIRS TO THE PAVED AREA WILL NOT BE MEASURED AND PAID FOR SEPARATELY BUT SHALL BE INCLUDED IN THE COST OF THE WORK. A MINIMUM 3 IN. THICK FIBER REINFORCED CONCRETE PAVEMENT MAY ALSO BE USED FOR PAVING BENEATH THE GUARDRAIL. INSTALL THE POST IN A ½ IN. OVERSIZED FORMED HOLE FOR GUARDRAIL RUNS AND TERMINALS AS DIRECTED. PAYMENT FOR THIS PAVED SURFACE WILL BE MADE UNDER A PAVEMENT OR CONCRETE PAY ITEM WITH QUANTITIES SHOWN ON THE PLANS.
4. THE MINIMUM GUARDRAIL OFFSET FROM PAVED SHOULDER EDGE SHALL BE:
   0 FT. FOR SHOULDERS 8 FT. OR WIDER
   2 FT. FOR SHOULDERS 6 FT. OR LESS

   THE GUARDRAIL OFFSET FROM PAVED INSIDE SHOULDER EDGE OF A DIVIDED HIGHWAY SHALL BE;
   0 FT. MINIMUM FOR SHOULDERS 6 FT. OR WIDER
   2 FT. DESIRABLE FOR 4 FT. SHOULDERS

   THE ABOVE 2 FT. GUARDRAIL TO SHOULDER OFFSET IS DESIRABLE BUT NOT REQUIRED FOR:
   A. FOR AN EXISTING HIGHWAY WITH A DESIGN SPEED LESS THAN 50 MPH, THE MINIMUM OFFSET IS 4 FT. FROM THE TRAVELED WAY.
   B. FOR A ONE-WAY ONE-LANE RAMP, AND WHERE ONE OR MORE OF THE FOLLOWING ARE TRUE:
      (1) THE NON-OFFSET GUARDRAIL BEGINS AT LEAST 100 FT. BEYOND RAMP NOSE.
      (2) THE NON-OFFSET GUARDRAIL IS NOT LOCATED ON THE RAMP EXIT OR ENTRANCE CURVE CONNECTION TO THE MAJOR HIGHWAY.
      (3) THE RAMP SHOULDERS ARE 4 FT. OR WIDER.

   USE OF GREATER THAN MINIMUM OFFSET DIMENSIONS IS ENCOURAGED TO MEET THE DESIRABLE GOAL OF PLACING THE GUARDRAIL AS FAR AS POSSIBLE FROM THE TRAVEL WAY, EVEN FOR SHORT DISTANCES, WHILE PROVIDING A SMOOTH CHANGE IN GUARDRAIL ALIGNMENT.
5. IF 2 FT. CANNOT BE PROVIDED BETWEEN THE BACK OF THE GUARDRAIL POST AND THE BREAKPOINT, USE 7 FT. GUARDRAIL POSTS. REFER TO THE "RESTRICTIVE ROADSIDE INSTALLATION" DETAIL.
6. WHEN SPECIFIED ON THE PLANS, INSTALL 4 IN. HIGH TYPE 6 CURB WITH ITS FACE AT OR BEHIND THE RAIL FACE. AS AN ALTERNATIVE WHEN SPECIFIED ON THE PLANS, INSTALL A 2 IN. x 6 IN. TREATED (AASHTO M 133) WOOD CURB. FASTEN WITH A 4 IN. LAG BOLT AND WASHER AT EACH WOOD POST, OR WITH A 1#4 IN. DIA. BOLT WITH WASHER AND NUT AT EACH STEEL POST. IF THE 2 IN. x 6 IN. WOOD CURB IS SPECIFIED, IT WILL BE INCLUDED IN THE COST OF THE GUARDRAIL. IF APPROVED BY THE ENGINEER, A 2 IN. x 4 IN. TREATED WOOD CURB MAY BE SUBSTITUTED FOR THE 2 IN. x 6 IN. CURB AND SET ON TOP OF PAVEMENT SURFACE AND ATTACHED AS DESCRIBED ABOVE. NO SPLICING SHALL BE ALLOWED IN WOOD CURBS. ADJACENT BOARDS SHALL BE BUTTED TOGETHER AND BOLTED AT A POST LOCATION. JOINTS SHALL BE LOCATED AT THE POSTS.

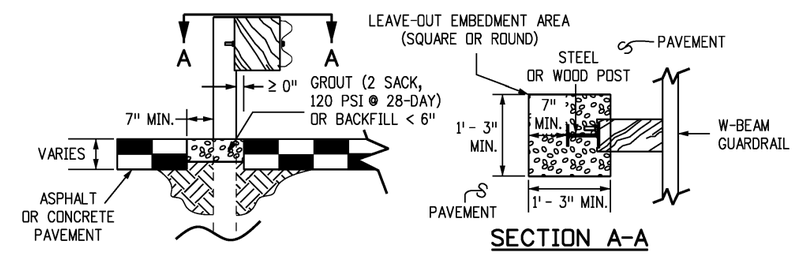

SECTION A-A

LEAVE-OUT AREA FOR GUARDRAIL POSTS LOCATED IN PAVEMENT

NOTE: LEAVE-OUT AREAS SHALL BE PROVIDED FOR ALL GUARDRAIL POSTS LOCATED IN PAVEMENT TO ALLOW THE POSTS TO ROTATE IN THEIR EMBEDMENT SUCH THAT VEHICLE IMPACT LOADS ARE DISTRIBUTED THROUGH THE POST INTO THE EMBEDMENT MATERIAL PRIOR TO THE POSTS BREAKING PREMATURELY.

Computer File Information	
Creation Date: 07/31/19	
Designer Initials: JBK	(R-X)
Last Modification Date: 03/05/20	(R-X)
Detailer Initials: LTA	(R-X)
CAD Ver.: MicroStation V8 Scale: Not to Scale Units: English	(R-X)

Sheet Revisions	
Date:	Comments
03/05/20	Revised Gen. Note 1 to show MASH compliant.

Colorado Department of Transportation
2829 West Howard Place
CDOT HQ, 3rd Floor
Denver, CO 80204
Phone: 303-757-9021 FAX: 303-757-9868
Project Development Branch JBK

MIDWEST GUARDRAIL SYSTEM (MGS) TYPE 3 W-BEAM 31 INCHES

Issued by the Project Development Branch: July 31, 2019

STANDARD PLAN NO.
M-606-1
Standard Sheet No. 1 of 19
Project Sheet Number:

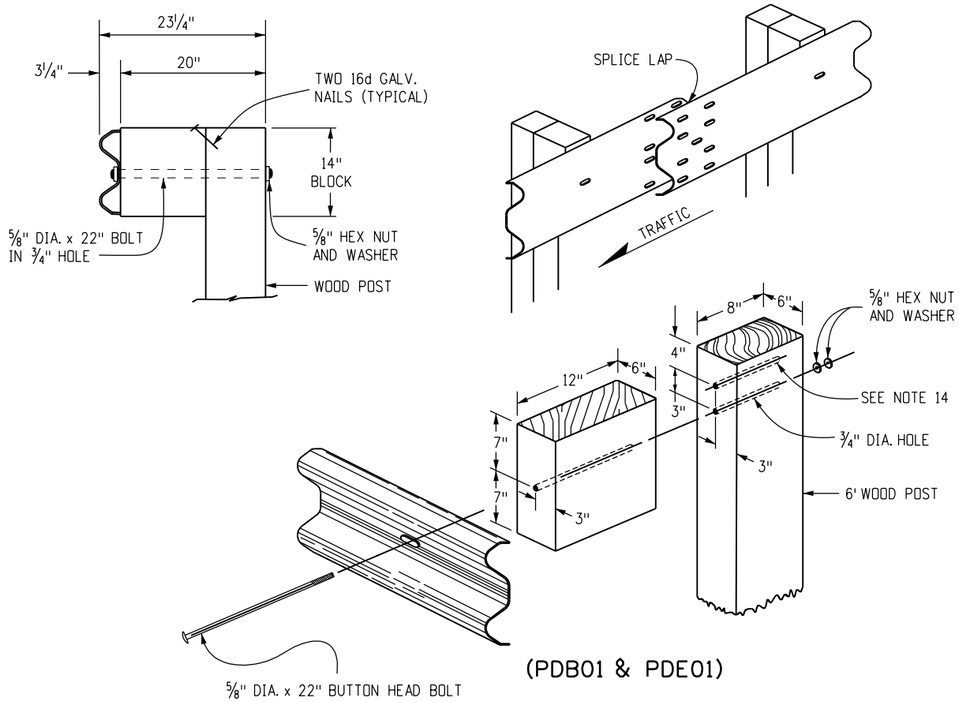

(PDB01 & PDE01)

WOOD POST & BLOCK

(NOMINAL DIMENSIONS ARE SHOWN FOR THE POSTS & BLOCKS)

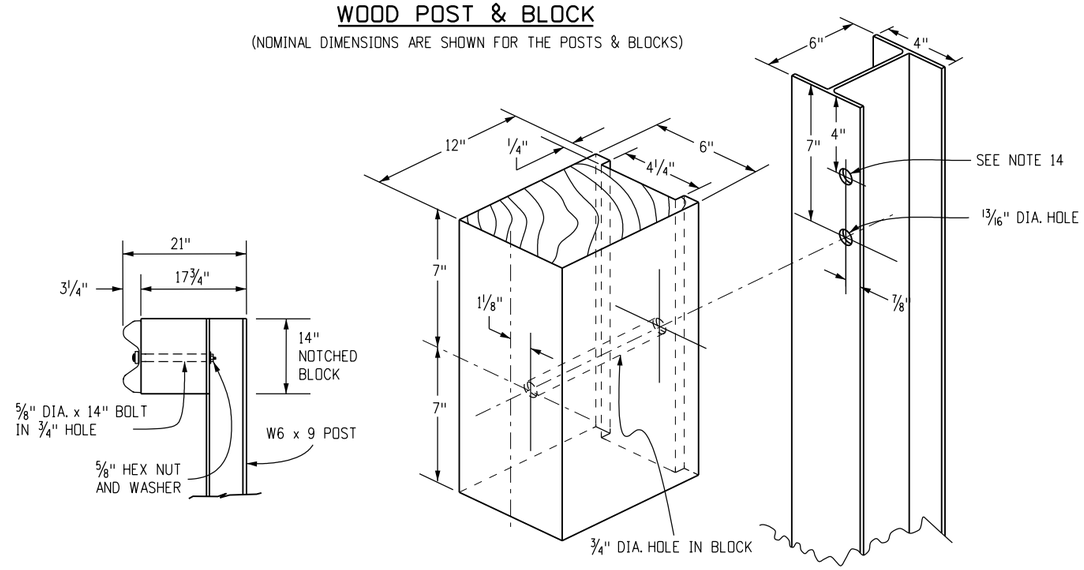

(PWE01)

STEEL POST & NOTCHED BLOCK

(NOMINAL DIMENSIONS ARE SHOWN FOR THE POSTS & BLOCKS)

GENERAL NOTES (CONTINUED FROM SHEET 1)

7. SEE SHEETS 7 AND 9 FOR CURB TREATMENTS AT GUARDRAIL TERMINALS.
8. IF THIS DIMENSION WILL BE LESS THAN 28 INCHES, RESET GUARDRAIL HEIGHT TO 28 INCHES OR ABOVE.
9. ALL W-BEAM SPLICES, AND SPLICES OF TERMINAL CONNECTORS TO W-BEAM SHALL BE LAPPED IN THE DIRECTION OF TRAFFIC UNLESS OTHERWISE NOTED IN THE PLANS OR BY THE MANUFACTURER.
10. MATERIAL TYPE AND SHAPE OF POSTS AND BLOCKS SHALL BE THE SAME THROUGHOUT THE PROJECT EXCEPT WHEN SPECIFIC POSTS AND BLOCKS ARE SPECIFIED, i.e. AT END ANCHORAGES AND BOX CULVERTS.
11. WHEN SPECIFIED IN THE CONTRACT, 7 FT. POSTS SHALL BE INSTALLED INSTEAD OF THE STANDARD 6 FT. POSTS. THE 7 FT. POSTS SHALL BE MARKED WITH THE NUMBER 7 TO ENSURE PERMANENT INDENTIFICATION. STEEL POSTS SHALL BE STAMPED PRIOR TO GALVANIZING. THE NUMBER 7 SHALL BE A MINIMUM 2 IN. TALL AND LOCATED AS SHOWN ON THE ELEVATION VIEW ON SHEET 1.
12. THE STANDARD 3 IN. X 1¾ IN. X 3⁄16 IN. RECTANGULAR WASHER USED UNDER POST BOLT HEADS IN THE PAST MAY REMAIN IN EXISTING INSTALLATIONS BUT SHALL NOT BE USED IN NEW CONSTRUCTION, REPAIRS, OR RESETTING OF RAIL, EXCEPT WHEN SPECIFICALLY IDENTIFIED ON THE STANDARD PLAN.
13. STANDARD GALVANIZED ROUND STEEL WASHERS SHALL BE USED UNDER ALL NUTS IN CONTACT WITH WOOD POSTS.
14. AN ADDITIONAL HOLE SHALL BE PROVIDED IN THE POSTS TO FACILITATE FUTURE RAISING OF THE RAIL ELEMENTS AND BLOCKS FOR OVERLAYS. POSTS PROVIDED MAY ALSO HAVE ADDITIONAL HOLES (UP TO 4 PER FLANGE) FOR MEDIAN GUARDRAIL APPLICATION.
15. RETROREFLECTOR TABS SHALL BE INSTALLED AT 25 FT. INTERVALS (SEE SHEETS 6 AND 8 FOR EXCEPTIONS). RETROREFLECTOR TABS WILL NOT BE PAID FOR SEPARATELY BUT SHALL BE INCLUDED IN THE WORK. THE TABS SHALL BE INSTALLED ON SPLICE BOLTS, NOT ON POST BOLTS AND SHALL BE MOUNTED SO THE BOLT SLOT FACES AWAY FROM TRAFFIC, AND THE RETROREFLECTOR SURFACE FACES THE APPROACHING TRAFFIC FOR ONE-WAY ROADS. FOR TWO-WAY ROADS, BOTH SIDES OF THE TABS SHALL BE RETROREFLECTIVE, SO THAT DELINEATION IS PROVIDED FOR BOTH DIRECTIONS OF TRAVEL. THE RETROREFLECTIVE SHEETING COLOR SHALL MATCH THE COLOR OF THE ADJACENT TRAVEL WAY EDGE LINE. SEE THE RETROREFLECTOR TAB DETAIL ON SHEET 3.
16. AT THE TIME OF INSTALLATION, WOOD POSTS OR BLOCKS WITH SEASONING CHECKS GREATER THAN ¼ IN. SHALL NOT BE USED WHEN THE CHECK EXTENDS THE FULL LENGTH OF THE PIECE.
17. WOOD BLOCKS SHALL BE CUT FROM THE SAME CROSS-SECTION, SPECIES, AND GRADE, AND SHALL RECEIVE THE SAME PRESERVATIVE TREATMENT AS THE POSTS WHEN WOOD POSTS ARE USED.
18. REFERENCES SUCH AS "PDB01", "PDE01", AND "PWE01" IN THIS STANDARD PLAN SPECIFY HARDWARE DETAILS FROM "A GUIDE TO STANDARDIZED HIGHWAY BARRIER HARDWARE" PREPARED BY THE AASHTO-AGC-ARTBA JOINT COOPERATIVE COMMITTEE.
19. RAIL BLOCKS MANUFACTURED FROM SYNTHETIC MATERIAL WILL BE ACCEPTED AS ALTERNATIVES TO WOOD BLOCKS FOR USE WITH STEEL POSTS PROVIDED THAT THE BLOCKS HAVE RECEIVED FHWA APPROVAL.
20. WOOD POSTS SHALL BE MADE OF TIMBER WITH AN EXTREME FIBER STRESS IN BENDING OF 1200 PSI STRESS GRADING AND POST DIMENSIONS SHALL CONFORM WITH THE RULES OF THE WEST COAST INSPECTION BUREAU, OR THE SOUTHERN PINE BUREAU, OR THE WESTERN WOOD PRODUCTS ASSOCIATION. TIMBER FOR POSTS SHALL BE EITHER ROUGH SAWN (UNPLANED) OR S4S (SURFACED FOUR SIDES) WITH NOMINAL DIMENSIONS INDICATED. ONLY ONE TYPE OF SURFACE FINISH SHALL BE USED FOR POSTS AND BLOCKS IN ANY ONE CONTINUOUS LENGTH OF GUARDRAIL.
21. GLULAM POSTS AND BLOCKS WILL BE ACCEPTED AS ALTERNATIVES PROVIDED THAT THE SUPPLIED MATERIALS HAVE RECEIVED FHWA APPROVAL AND ARE CERTIFIED AS IDENTICAL TO THE SPECIMENS USED FOR TESTING AND APPROVAL.
22. PRESSURE TREATMENT OF POSTS AND BLOCKS SHALL CONFORM TO AASHTO M 133 EXCEPT THAT BLOCKS NEED NOT BE INCISED. PRESERVATION ASSAY RETENTION REPORTS SHALL BE SUBMITTED TO THE ENGINEER. THE CONTRACTOR SHALL CERTIFY THAT THE SPECIES AND GRADE MEET THE REQUIREMENTS OF THE CONTRACT.
23. W-BEAM AND THRIE-BEAM GUARDRAIL POSTS SHALL BE MANUFACTURED USING AASHTO M 270 (ASTM A 709) GRADE 36 STEEL UNLESS CORROSION RESISTANT STEEL IS REQUIRED, IN WHICH CASE THE POST SHALL BE MANUFACTURED FROM AASHTO M 270 (ASTM A 709) GRADE 50W STEEL. THE DIMENSIONS OF THE CROSS-SECTION SHALL CONFORM TO A W6 X 9 SECTION AS DEFINED IN AASHTO M 160 (ASTM A 6). W6 X 8.5 WIDE FLANGE STEEL POSTS ARE AN ACCEPTABLE ALTERNATIVE TO THE W6 X 9.
24. AFTER THE SECTION IS CUT AND ALL HOLES ARE DRILLED OR PUNCHED THE COMPONENT SHALL BE ZINC-COATED CONFORMING TO AASHTO M 111 (ASTM A 123) UNLESS CORROSION-RESISTANT STEEL IS USED. WHEN CORROSION-RESISTANT STEEL IS USED THE PORTION OF THE POST TO BE EMBEDDED IN SOIL SHALL BE ZINC-COATED CONFORMING TO AASHTO M 111 (ASTM A 123) AND THE PORTION ABOVE THE SOIL SHALL NOT BE ZINC-COATED, PAINTED OR OTHERWISE TREATED.
25. FIELD MODIFICATION TO RAIL ELEMENTS IS ALLOWED PER MANUFACTURER'S RECOMMENDATIONS, OR WITH THE APPROVAL OF THE STANDARDS AND SPECIFICATIONS UNIT. POSTS SHALL NOT BE MODIFIED. COMPONENTS ON WHICH THE SPELTER COATING HAS BEEN DAMAGED SHALL BE EITHER REGALVANIZED OR RECOATED IN CONFORMANCE WITH AASHTO M 36, OR PAINTED WITH ONE FULL BRUSH COAT OF ZINC RICH PAINT CONFORMING TO MILITARY SPECIFICATION DOD-P-21035A.

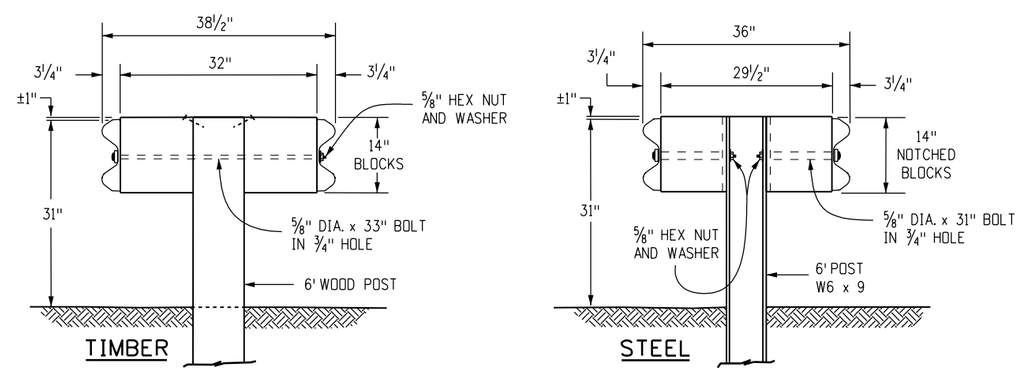

DOUBLE BLOCK AND GUARDRAIL TYPE 3 (DOUBLE) FOR MEDIAN BARRIER

Computer File Information		Sheet Revisions	
Creation Date: 07/31/19		Date:	Comments
Designer Initials: JBK	R-X		
Last Modification Date: 03/05/20	R-X		
Detailer Initials: LTA	R-X		
CAD Ver.: MicroStation V8 Scale: Not to Scale Units: English	R-X		

Colorado Department of Transportation
2829 West Howard Place
CDOT HQ, 3rd Floor
Denver, CO 80204
Phone: 303-757-9021 FAX: 303-757-9868
Project Development Branch JBK

MIDWEST GUARDRAIL SYSTEM (MGS) TYPE 3 W-BEAM 31 INCHES

Issued by the Project Development Branch: July 31, 2019

STANDARD PLAN NO.
M-606-1
Standard Sheet No. 2 of 19
Project Sheet Number:

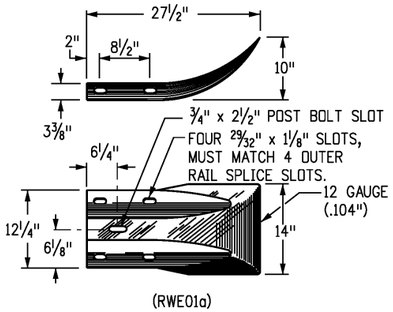

TERMINAL SECTION (FLARED)

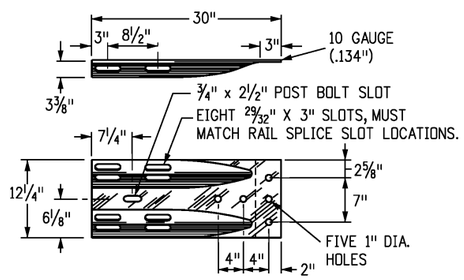

TERMINAL SECTION (CONNECTOR)

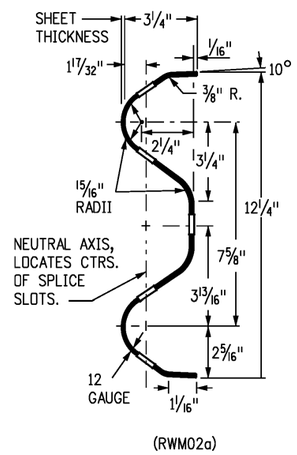

W-BEAM RAIL SECTION

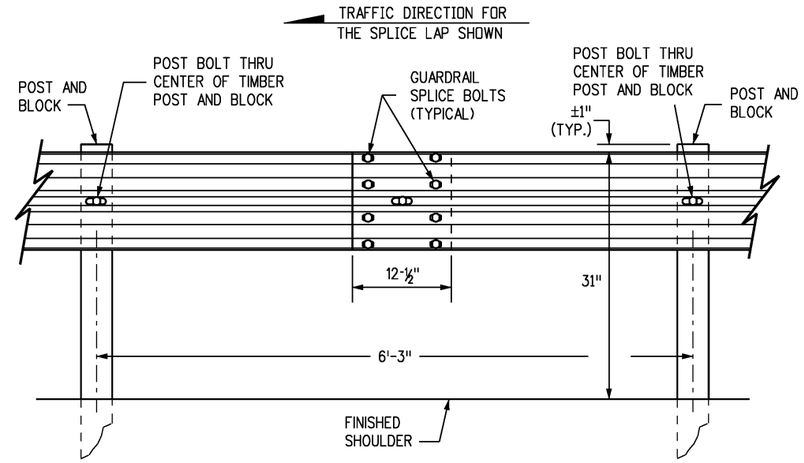

W-BEAM RAIL SPLICE

PART	MATERIAL SPEC.	GALVANIZING SPEC.	CORROSION-RESISTANT SPEC.
W-BEAM RAIL & TERMINAL SECTIONS	AASHTO M 180, CLASS A OR B	AASHTO M 180, TYPE 1 OR 2	AASHTO M 180, TYPE 4
BASE PLATE	ASTM A 36	AASHTO M 111	N.A.
NUTS, BOLTS & STUDS FOR GENERAL USE	ASTM A 307	AASHTO M 232, CLASS C OR ASTM B 695 CLASS 50 TYPE 1	
HIGH STRENGTH BOLTS & NUTS	ASTM A 325		
HIGH STRENGTH STUDS & NUTS	ASTM A 449		
ROUND STEEL WASHERS	ASTM F 436		
RECTANGULAR WASHERS	AASHTO M 180		
OTHER FITTINGS	ASTM A 36	AASHTO M 111	

THE TABULATION OF GUARDRAIL WILL SPECIFY THE TYPE OF CORROSION PROTECTION: GALVANIZED OR CORROSION - RESISTANT STEEL.

STEEL POSTS SHALL HAVE THE SAME CORROSION PROTECTION AS SPECIFIED FOR THE METAL BEAM RAIL. PUNCHING, DRILLING, CUTTING, OR WELDING OF POSTS WILL NOT BE PERMITTED AFTER GALVANIZING.

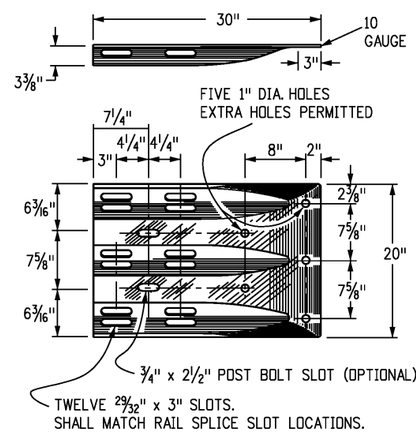

THRIE BEAM TERMINAL SECTION (CONNECTOR)

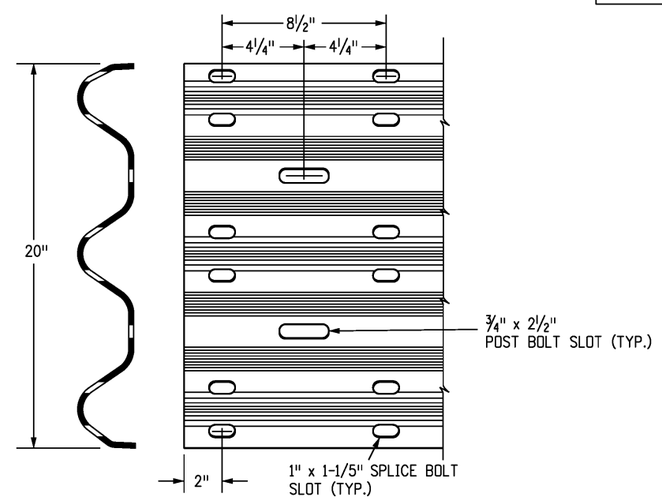

THRIE BEAM DETAIL

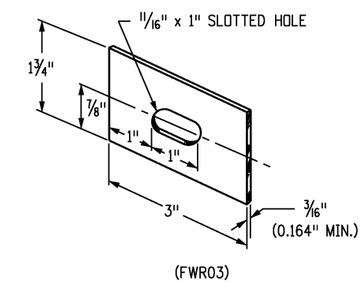

RECTANGULAR WASHER

(TO BE USED ONLY WHERE SPECIFIED.)

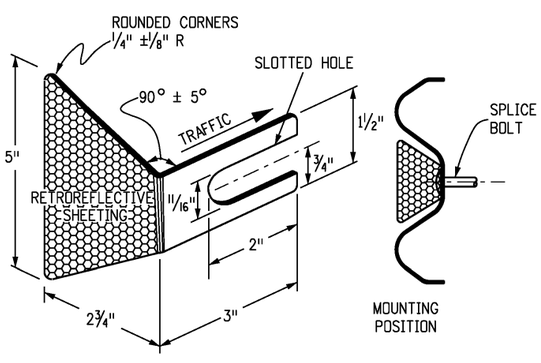

RETROREFLECTOR TAB

NOTE: RETROREFLECTOR TABS SHALL BE MANUFACTURED FROM 12 TO 14 GAUGE STEEL AND SHALL CONFORM TO THE REQUIREMENTS OF S STANDARD S-612-1.

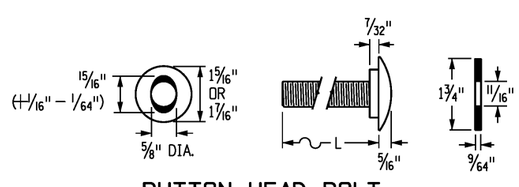

BUTTON HEAD BOLT WITH OVAL SHOULDER

WASHER

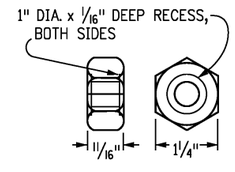

HEX NUT

DIAMETER & TYPE (INCHES)	12" BLOCKS L = LENGTH (INCHES)	THREAD LENGTH (INCHES)	INTENDED USE	AASHTO-AGC-ARTBA STANDARD NUMBER	NO. BOLTS, NUTS & WASHERS
⅝	1¼	FULL (1 1/32)	ALL RAIL SPLICES	FBB01	8 PER SPLICE*
BUTTONHEAD OVAL SHLDR.	22	MIN. 2½	SINGLE BLOCK & POST (TIMBER)	FBB04	1 PER POST
	33	MIN. 2	DOUBLE BLOCK & POST (TIMBER)	FBB05	1 PER POST
	14	MIN. 2	FASTEN NOTCHED BLOCK TO STEEL POST	FBB03	1 PER BLOCK
WASHERS NOT USED AT RAIL SPLICES					

Computer File Information		Sheet Revisions	
Creation Date: 07/31/19		Date:	Comments
Designer Initials: JBK	R-X		
Last Modification Date: 03/05/20	R-X		
Detailer Initials: LTA	R-X		
CAD Ver.: MicroStation V8 Scale: Not to Scale Units: English	R-X		

Colorado Department of Transportation
2829 West Howard Place
CDOT HQ, 3rd Floor
Denver, CO 80204
Phone: 303-757-9021 FAX: 303-757-9868
Project Development Branch JBK

MIDWEST GUARDRAIL SYSTEM (MGS) TYPE 3 W-BEAM 31 INCHES

Issued by the Project Development Branch: July 31, 2019

STANDARD PLAN NO.
M-606-1
Standard Sheet No. 3 of 19
Project Sheet Number:

NOTES

1. THE MGS TRANSITION FROM A TYPE 3 GUARDRAIL SHALL BE COMPLETED OUTSIDE THE MGS END ANCHORAGE LIMITS.

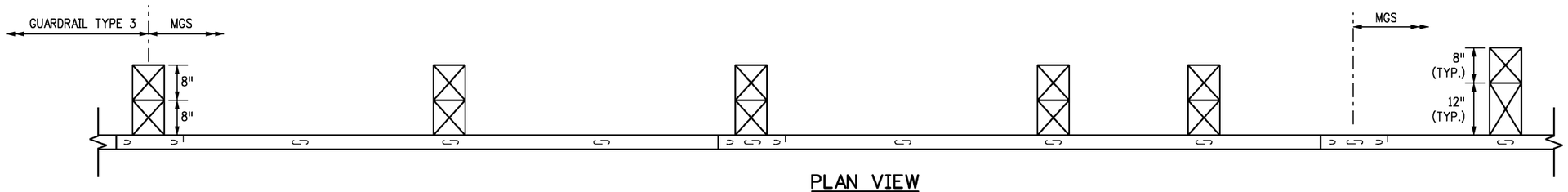

PLAN VIEW

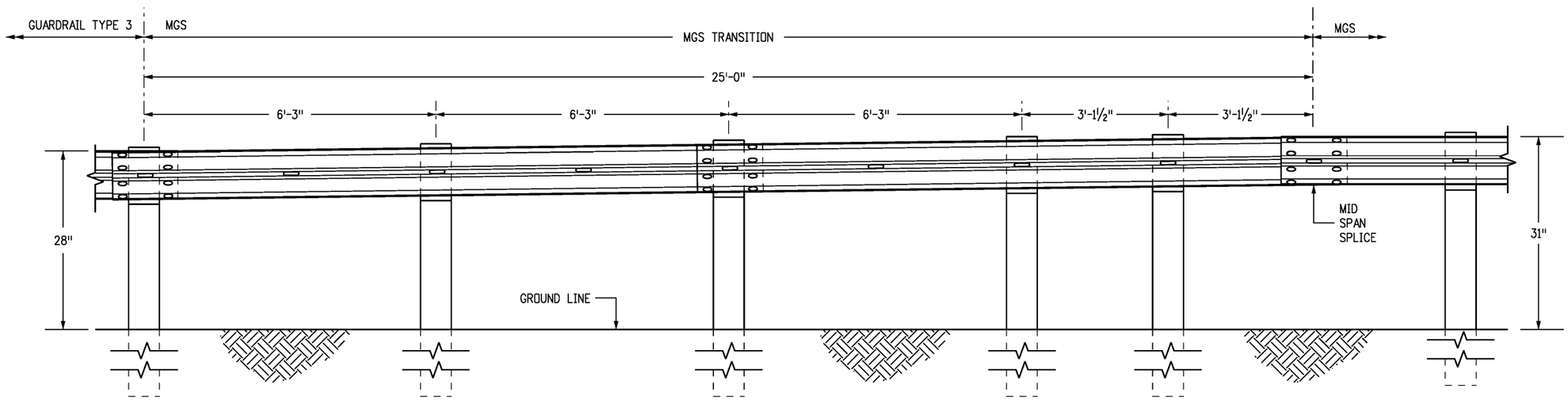

ELEVATION VIEW

TRANSITION FROM 28 INCH GUARDRAIL TO 31 INCH MGS

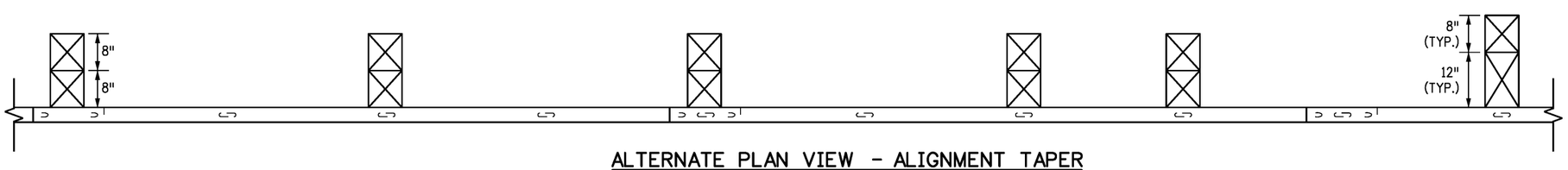

ALTERNATE PLAN VIEW - ALIGNMENT TAPER

Computer File Information		Sheet Revisions	
Creation Date: 07/31/19		Date:	Comments
Designer Initials: JBK	(R-X)		
Last Modification Date: 03/05/20	(R-X)		
Detailer Initials: LTA	(R-X)		
CAD Ver.: MicroStation V8 Scale: Not to Scale Units: English	(R-X)		

Colorado Department of Transportation
2829 West Howard Place
CDOT HQ, 3rd Floor
Denver, CO 80204
Phone: 303-757-9021 FAX: 303-757-9868
Project Development Branch JBK

MIDWEST
GUARDRAIL SYSTEM (MGS)
TYPE 3 W-BEAM 31 INCHES

Issued by the Project Development Branch: July 31, 2019

STANDARD PLAN NO.
M-606-1
Standard Sheet No. 4 of 19
Project Sheet Number:

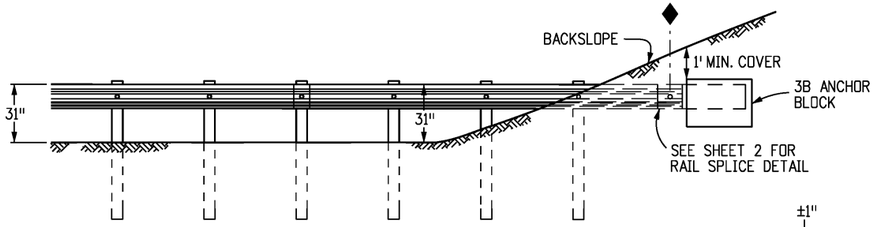

SEE TYPE 3B (RUB RAIL) PLAN VIEW FOR ALIGNMENT. THE 100 FT. FLARE LENGTH MAY BE SHORTENED IF THE SLOPE IS LESS THAN 8 FT. WIDE.

END ANCHORAGE TYPE 3B

(WITHOUT ROADSIDE DITCH AT GUARDRAIL)

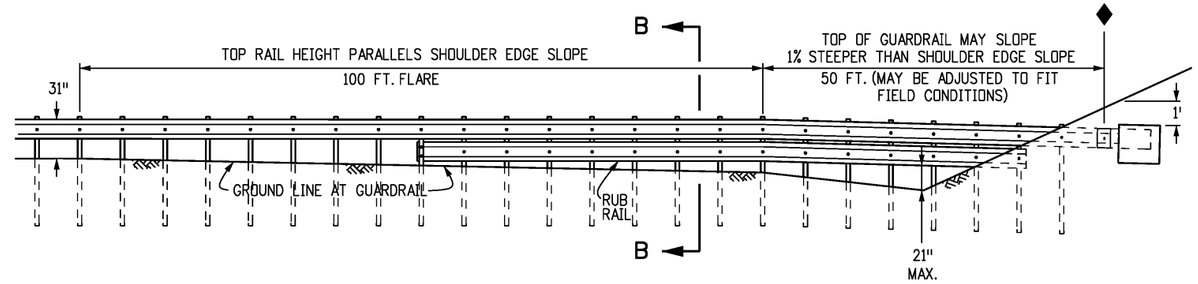

ELEVATION VIEW

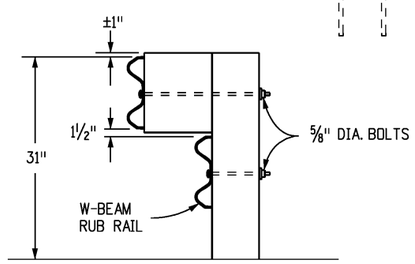

SECTION B-B

MOUNT A W-BEAM RUB RAIL 1-½ IN. BELOW THE TOP RAIL WHEN THE TOP RAIL HEIGHT EXCEEDS 33 IN. ABOVE THE GROUND

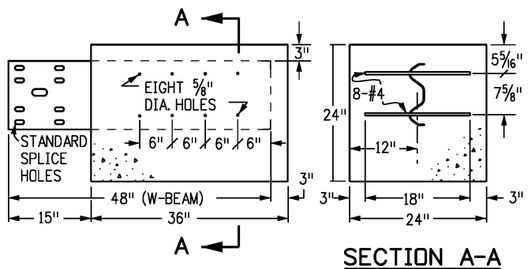

SECTION A-A

TYPE 3B ANCHOR BLOCK DETAIL

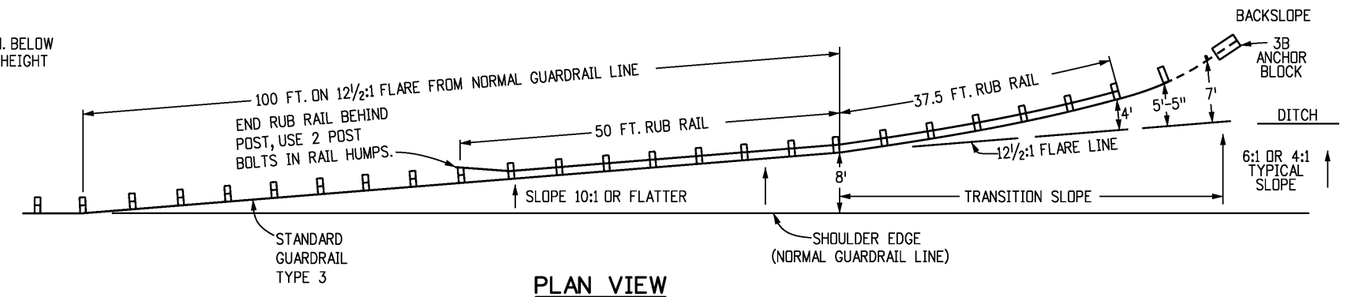

PLAN VIEW

END ANCHORAGE TYPE 3B (RUB RAIL)

(WITH ROADSIDE DITCH AT GUARDRAIL)

◆ END OF GUARDRAIL PAY LENGTH

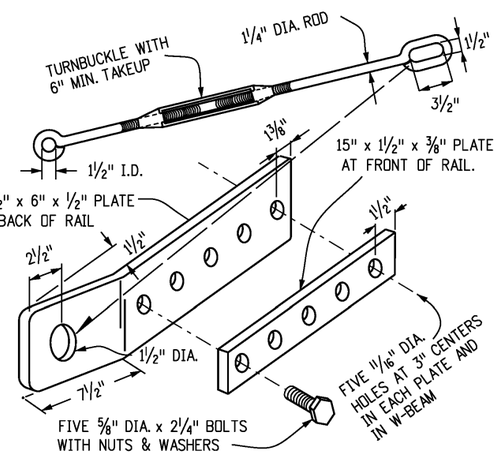

TYPE 3D HARDWARE DETAILS

NOTE: ALL PARTS SHALL BE GALVANIZED

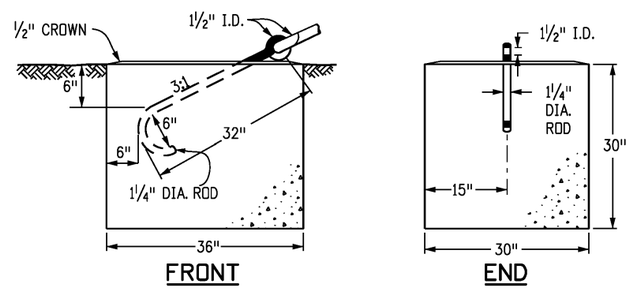

FRONT END

TYPE 3D ANCHOR BLOCK DETAIL

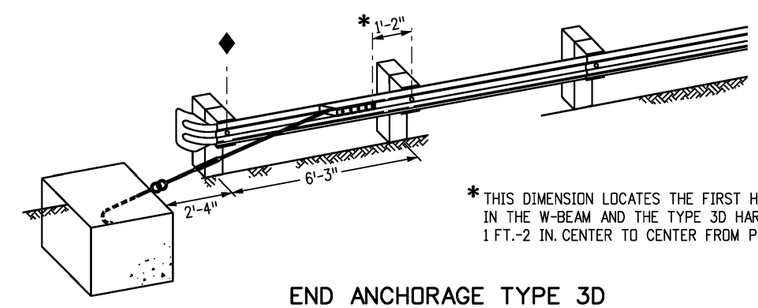

* THIS DIMENSION LOCATES THE FIRST HOLE IN THE W-BEAM AND THE TYPE 3D HARDWARE. 1 FT.-2 IN. CENTER TO CENTER FROM POST BOLT HOLE.

END ANCHORAGE TYPE 3D DEPARTURE TERMINAL

Computer File Information		Sheet Revisions	
Creation Date: 07/31/19		Date:	Comments
Designer Initials: JBK	R-X		
Last Modification Date: 03/05/20	R-X		
Detailer Initials: LTA	R-X		
CAD Ver.: MicroStation V8 Scale: Not to Scale Units: English	R-X		

Colorado Department of Transportation
2829 West Howard Place
CDOT HQ, 3rd Floor
Denver, CO 80204
Phone: 303-757-9021 FAX: 303-757-9868
Project Development Branch JBK

MIDWEST GUARDRAIL SYSTEM (MGS) TYPE 3 W-BEAM 31 INCHES

Issued by the Project Development Branch: July 31, 2019

STANDARD PLAN NO.
M-606-1
Standard Sheet No. 5 of 19
Project Sheet Number:

OFFSET NOTES

1. POST OFFSET DIMENSIONS ARE GIVEN TO THE CENTER OF THE TRAFFIC FACE OF POSTS.
2. THE GUARDRAIL BETWEEN POST (1) THRU (8) IS ON A STRAIGHT LINE FLARE.

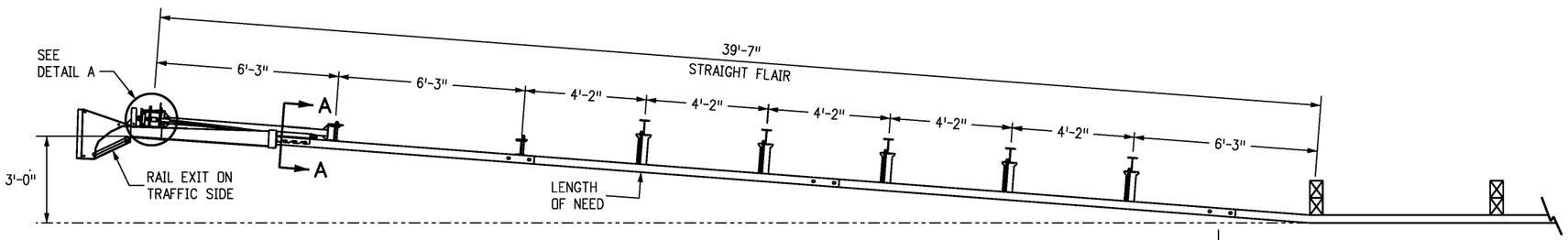

PLAN

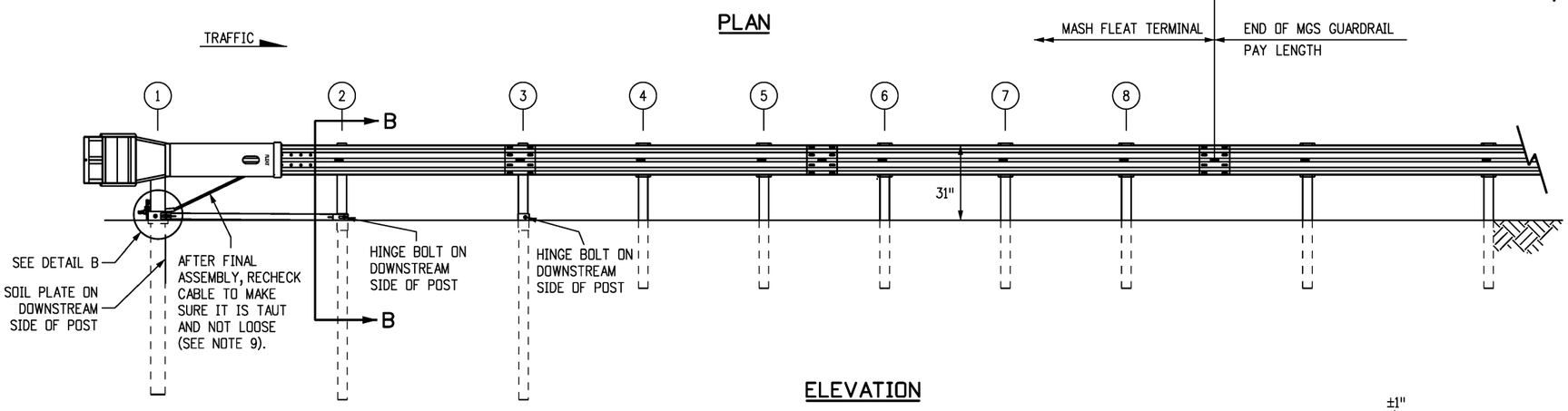

ELEVATION

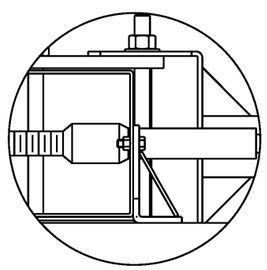

DETAIL A
IMPACT HEAD CONNETION

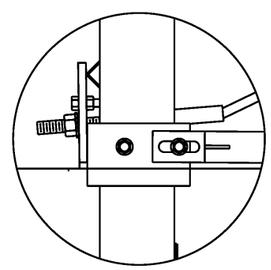

DETAIL B
POST #1 CONNECTION

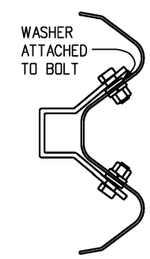

SECTION A-A
ANCHOR BRACKET

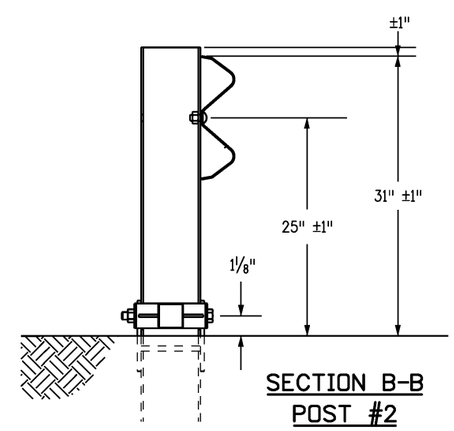

SECTION B-B
POST #2

MFLEAT TERMINAL
(MASH CERTIFIED)

NOTES

1. THE END ANCHORAGE (FLARED) SHALL BE THE MFLEAT TERMINAL, AS MANUFACTURED BY ROAD SYSTEMS INC. (TELEPHONE #: 432-263-2435). ONE END ANCHORAGE (FLARED) SHALL INCLUDE ALL POST, RAIL, AND ALL HARDWARE ITEMS REQUIRED FOR A COMPLETE UNIT. THE END ANCHORAGE (FLARED) SHALL BE INSTALLED CONFORMING TO THE MANUFACTURER'S RECOMMENDATIONS. THE CONTRACTOR SHALL PROVIDE A COPY OF THE MANUFACTURER'S INSTALLATION INSTRUCTIONS AND PARTS LIST TO THE ENGINEER PRIOR TO INSTALLATION OF THE DEVICE.
2. RETROREFLECTOR TABS SHALL NOT BE USED ON END ANCHORAGE POSTS.
3. DELINEATION SHALL BE APPLIED TO THE END PIECE, AND SHALL NOT BE PAID FOR SEPARATELY BUT SHALL BE INCLUDED IN THE WORK.
4. AESTHETIC TREATMENT OPTIONS MAY BE AVAILABLE WITH PRIOR APPROVAL OF THE PROJECT ENGINEER. CONTACT THE MANUFACTURER FOR APPROVED AESTHETIC TREATMENT OPTIONS.
5. ALL BOLTS, NUTS, CABLE ASSEMBLIES, CABLE ANCHORS AND BEARING PLATES SHALL BE GALVANIZED.
6. THE LOWER SECTIONS OF THE POSTS 1, 2, AND 3 SHALL NOT PROTRUDE MORE THAN 4 INCHES ABOVE THE GROUND (MEASURED ALONG A 5 FOOT CORD). SITE GRADING MAY BE NECESSARY TO MEET THIS REQUIREMENT.
7. THE LOWER SECTIONS OF THE HINGED POSTS SHOULD NOT BE DRIVEN WITH THE UPPER POST ATTACHED. IF THE POST IS PLACED IN A DRILLED HOLE, THE BACKFILL MATERIAL MUST BE SATISFACTORILY COMPACTED TO PREVENT SETTLEMENT.
8. WHEN COMPETENT ROCK IS ENCOUNTERED, A 12 INCH DIA. POST HOLE, DRILLED 20 INCHES DEEP INTO THE ROCK SURFACE SHALL BE USED IF APPROVED BY THE ENGINEER FOR POSTS 1 AND/OR 2. GRANULAR MATERIAL SHALL BE PLACED IN THE BOTTOM OF THE HOLE, APPROXIMATELY 2.5 INCHES DEEP TO PROVIDE DRAINAGE. THE FIRST AND/OR SECOND POST SHALL BE FIELD CUT TO LENGTH, PLACED IN THE HOLE AND BACKFILLED WITH SUITABLE BACKFILL. THE SOIL PLATE MAY BE TRIMMED IF REQUIRED.
9. THE BREAKAWAY CABLE ASSEMBLY SHALL BE TAUT. A LOCKING DEVICE (VICE GRIPS OR CHANNEL LOCK PLIERS) SHOULD BE USED TO PREVENT THE CABLE FROM TWISTING WHEN TIGHTENING NUTS.

END ANCHORAGES (FLARED)

Computer File Information		Sheet Revisions	
Creation Date: 07/31/19		Date:	Comments
Designer Initials: JBK	(R-X)	03/05/20	Replaced the SRT-31 and FLEAT 350 flared terminals with the MFLEAT flared terminal to be MASH compliant.
Last Modification Date: 03/05/20	(R-X)		
Detailer Initials: LTA	(R-X)		
CAD Ver.: MicroStation V8 Scale: Not to Scale Units: English	(R-X)		

Colorado Department of Transportation
2829 West Howard Place
CDOT HQ, 3rd Floor
Denver, CO 80204
Phone: 303-757-9021 FAX: 303-757-9868
Project Development Branch JBK

MIDWEST
GUARDRAIL SYSTEM (MGS)
TYPE 3 W-BEAM 31 INCHES

Issued by the Project Development Branch: July 31, 2019

STANDARD PLAN NO.
M-606-1
Standard Sheet No. 6 of 19
Project Sheet Number:

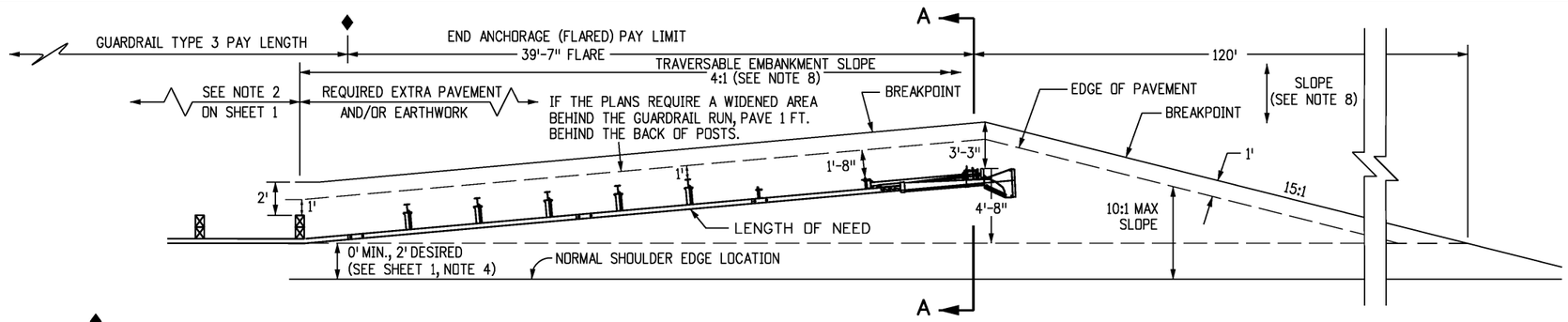

PLAN VIEW
WIDENING FOR END ANCHORAGE (FLARED) *

* THIS PLAN VIEW SHOWS ONLY THE SRT-31. THE FLEAT-350 USES THE SAME WIDENING DETAILS.

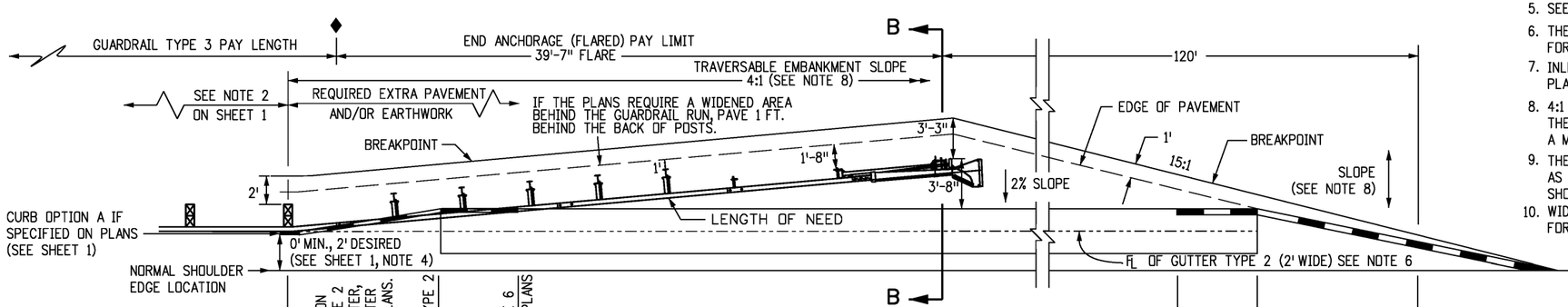

PLAN VIEW
WIDENING FOR END ANCHORAGE (FLARED) WITH CURB OPTION A *

PLAN VIEW
WIDENING FOR END ANCHORAGE (FLARED) WITH CURB OPTION B *

NOTES

1. PAYMENT FOR THE ADDED EMBANKMENT (APPROXIMATELY 45 CU. YDS.) FOR THE FLARE SHALL BE AS FOLLOWS:
   A. UNDER PAY ITEM 203 WHEN THE CONTRACT PLAN INCLUDES PAY ITEM 203
   B. INCLUDED IN THE COST OF THE END ANCHORAGE (FLARED) WHEN THE CONTRACT PLANS DO NOT INCLUDE PAY ITEM 203. THE ADDED EMBANKMENT SHALL BE CONSTRUCTED IN ACCORDANCE WITH SUBSECTION 203.07, AASHTO T 99.
2. WHEN THE WIDENED AREA IS PAVED, PAYMENT FOR THE PAVEMENT (APPROX. 70 SQ. YDS.) SHALL BE AS FOLLOWS:
   A. UNDER PAY ITEM 403 OR 412 WHEN THE CONTRACT PLAN INCLUDES PAY ITEM 403 OR 412
   B. INCLUDED IN THE COST OF THE END ANCHORAGE (FLARED) WHEN THE CONTRACT PLAN DOES NOT INCLUDE PAY ITEM 403 OR 412 (SEE SHEET 1, NOTE 2 FOR PAVEMENT TYPES)
3. CONCRETE PAVED AREAS SHALL HAVE THEIR TAPERED ENDS SQUARED OFF AS DIRECTED BY THE ENGINEER.
4. WHEN OVERLAY PAVING, THE FINISHED SURFACE AT EACH POST SHALL NOT BE ABOVE THE TOP BREAKAWAY HOLE OR STRUT ASSEMBLY. THE WIDENED AREA AT THE FLARED END ANCHORAGE SHOULD NOT BE OVERLAYED UNLESS PAVEMENT CONDITIONS WARRANT IT BEING OVERLAYED. ANY OVERLAY PAVEMENT ABUTTING THE FLARED END ANCHORAGE SHALL BE TAPERED TO PREVENT A DROP IN THE PAVED SURFACE BELOW THE RAIL.
5. SEE SHEETS 1, 2, 3, AND 5 FOR STANDARD TYPE 3 GUARDRAIL INSTALLATION DETAILS.
6. THE COST OF THE GUTTER WILL BE PAID FOR AS "GUTTER TYPE 2 (2 FT.)" FOR A LENGTH OF 134 FT. OR "GUTTER TY. 2 (3 FT.)" FOR A LENGTH OF 40 FT.
7. INLETS OR RUNDOWNS MAY BE USED INSTEAD OF THE GUTTER IF SPECIFIED ON THE PLANS. NO ADDITIONAL CURB SHALL BE ADDED IN THE VICINITY OF THE END ANCHORAGE.
8. 4:1 OR FLATTER SLOPES IN THE TRAVERSABLE AREA SHALL BE USED BEHIND THE END ANCHORAGE, AND IN ADVANCE OF POST 1. IF THIS IS NOT POSSIBLE, A MINIMUM 3:1 SLOPE MAY BE USED IF APPROVED BY THE ENGINEER.
9. THE WIDENED AREA, EXCEPT FOR CURB OPTION A, SHALL HAVE THE SAME GRADING AS THE ADJACENT GUARDRAIL: 10:1 OR FLATTER IF MORE THAN 2 FT. FROM SHOULDER OR SLOPE EQUAL TO ROADWAY SLOPE IF 2 FT. OR LESS FROM SHOULDER.
10. WIDENING FOR END ANCHORAGES SHALL BE PAVED ON INTERSTATES AND FREEWAYS. FOR OTHER HIGHWAYS, PAVING SHALL BE AS SHOWN ON THE PLANS.

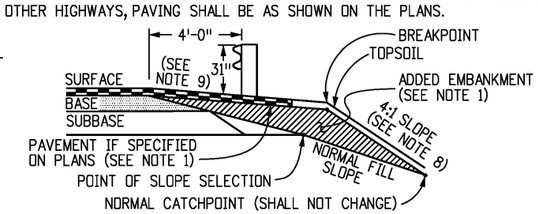

SECTION A-A

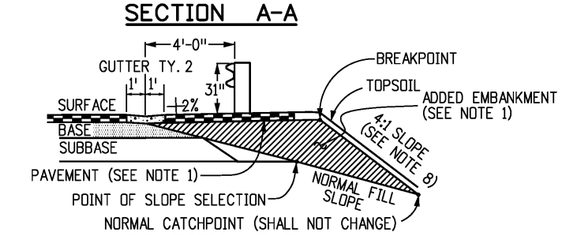

SECTION B-B

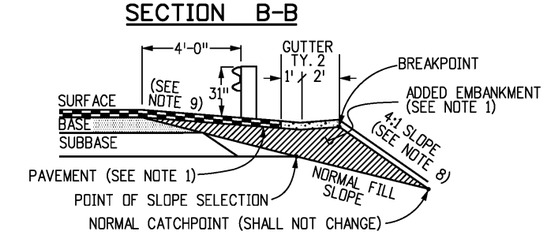

SECTION C-C

Computer File Information	
Creation Date: 07/31/19	
Designer Initials: JBK	(R-X)
Last Modification Date: 03/05/20	(R-X)
Detailer Initials: LTA	(R-X)
CAD Ver.: MicroStation V8 Scale: Not to Scale Units: English	(R-X)

Sheet Revisions	
Date:	Comments
03/05/20	Replaced the old end anchorage drawings with the new MFLEAT end anchorage drawing.

Colorado Department of Transportation
2829 West Howard Place
CDOT HQ, 3rd Floor
Denver, CO 80204
Phone: 303-757-9021 FAX: 303-757-9868
Project Development Branch JBK

MIDWEST
GUARDRAIL SYSTEM (MGS)
TYPE 3 W-BEAM 31 INCHES

Issued by the Project Development Branch: July 31, 2019

STANDARD PLAN NO.
M-606-1
Standard Sheet No. 7 of 19
Project Sheet Number:

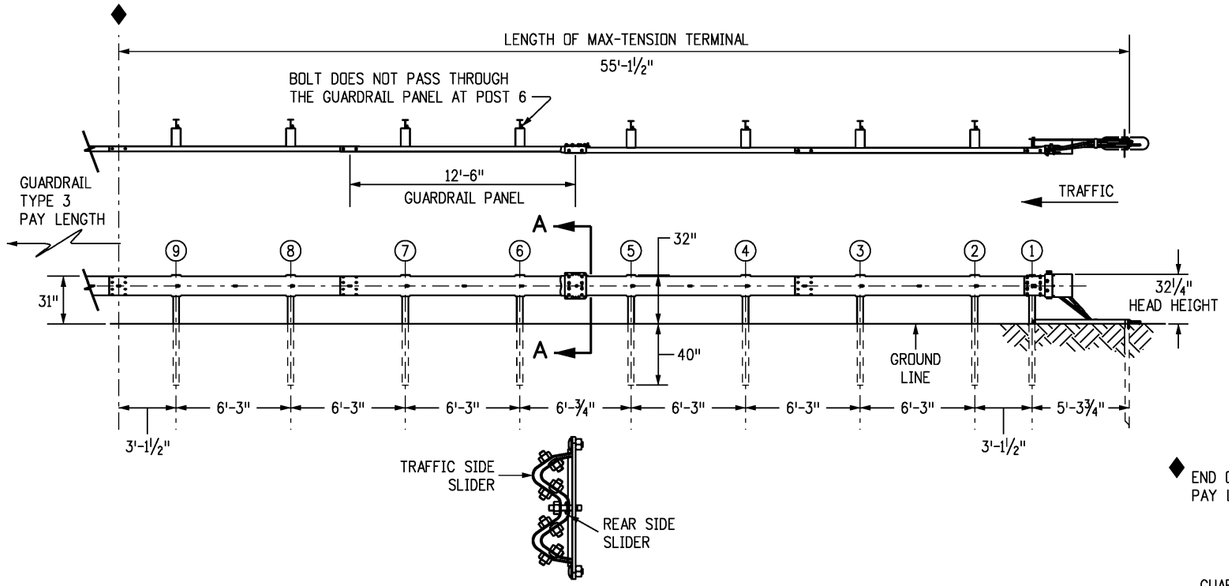

SECTION A-A

MAX-TENSION TERMINAL END ANCHORAGE (NONFLARED)

(MASH CERTIFIED)

NOTES FOR NONFLARED

1. THE END ANCHORAGE (NONFLARED) SHALL EITHER BE THE SOFTSTOP AS MANUFACTURED BY TRINITY INDUSTRIES, INC. (TEL. #: 1-888-356-2363), OR THE MAX-TENSION AS MANUFACTURED BY LINDSAY TRANSPORTATION SOLUTIONS (TEL. #: 402-829-6800), OR THE MSKT AS MANUFACTURED BY ROAD SYSTEMS, INC. (TEL. #: 432-263-2435). THE END ANCHORAGE (NONFLARED) SHALL INCLUDE ALL POST, RAIL, AND HARDWARE ITEMS REQUIRED FOR A COMPLETE UNIT. THE END ANCHORAGE (NONFLARED) SHALL BE INSTALLED CONFORMING TO THE MANUFACTURER'S RECOMMENDATIONS. THE CONTRACTOR SHALL PROVIDE A COPY OF THE MANUFACTURER'S INSTALLATION INSTRUCTIONS AND PARTS LIST TO THE ENGINEER PRIOR TO THE INSTALLATION OF THE DEVICE.
2. DO NOT ATTACH THESE END ANCHORAGES DIRECTLY TO A RIGID BARRIER (EX. CONCRETE BARRIER, STEEL BARRIER, CONCRETE STRUCTURE) WITHOUT A PROPER TRANSITION.
3. CONNECTIONS TO W-BEAMS WHERE THE SPLICE IS NOT AT MID-SPAN BUT AT A POST CAN BE MADE USING A 3'-1½", 9'-4½", OR 15'-7½" W-BEAM PANEL DOWNSTREAM OF TRAFFIC.
4. FOR MSKT END ANCHORAGES (NONFLARED), USE THE MANUFACTURER'S SPECIFIED STEEL FOUNDATION TUBES FOR POSTS (1) AND (2).
5. RETROREFLECTOR TABS SHALL NOT BE USED ON END ANCHORAGE POSTS.
6. DELINEATION SHALL BE APPLIED TO THE END PIECE AND SHALL NOT BE PAID FOR SEPARATELY BUT BE INCLUDED IN THE COST OF THE WORK. SEE STANDARD PLAN S-612-1.

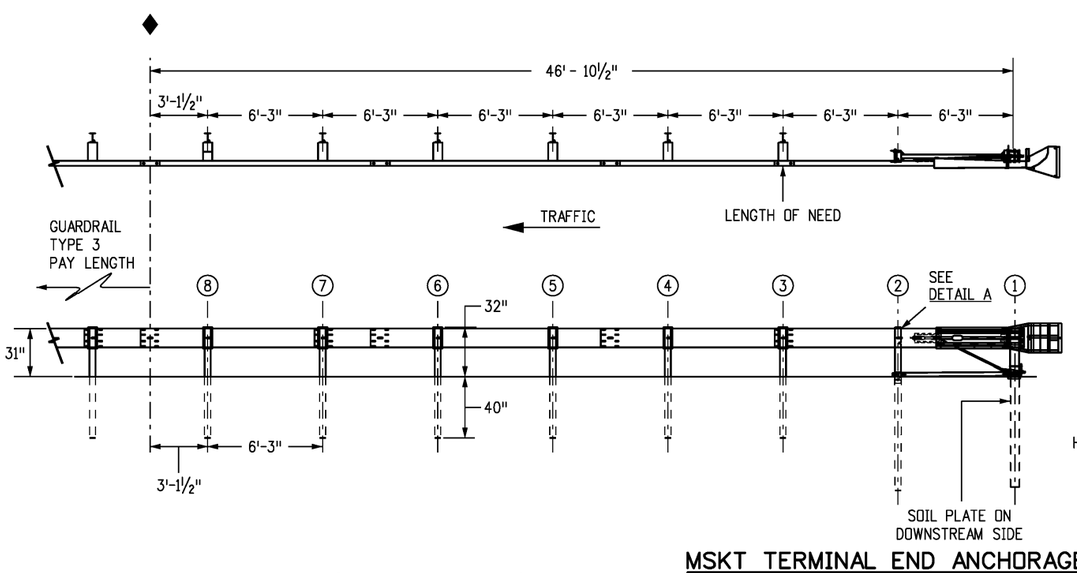

MSKT TERMINAL END ANCHORAGE (NONFLARED)

(MASH CERTIFIED)

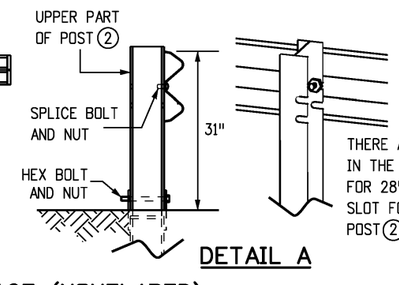

DETAIL A

THERE ARE TWO SETS OF OPEN-ENDED SLOTS IN THE UPPER PART OF POST (2). THESE ARE FOR 28" AND 31" RAIL HEIGHTS. USE THE TOP SLOT FOR THE 31" MSKT TERMINAL. INSTALL POST (2) WITH THE SLOTS FACING POST (1)

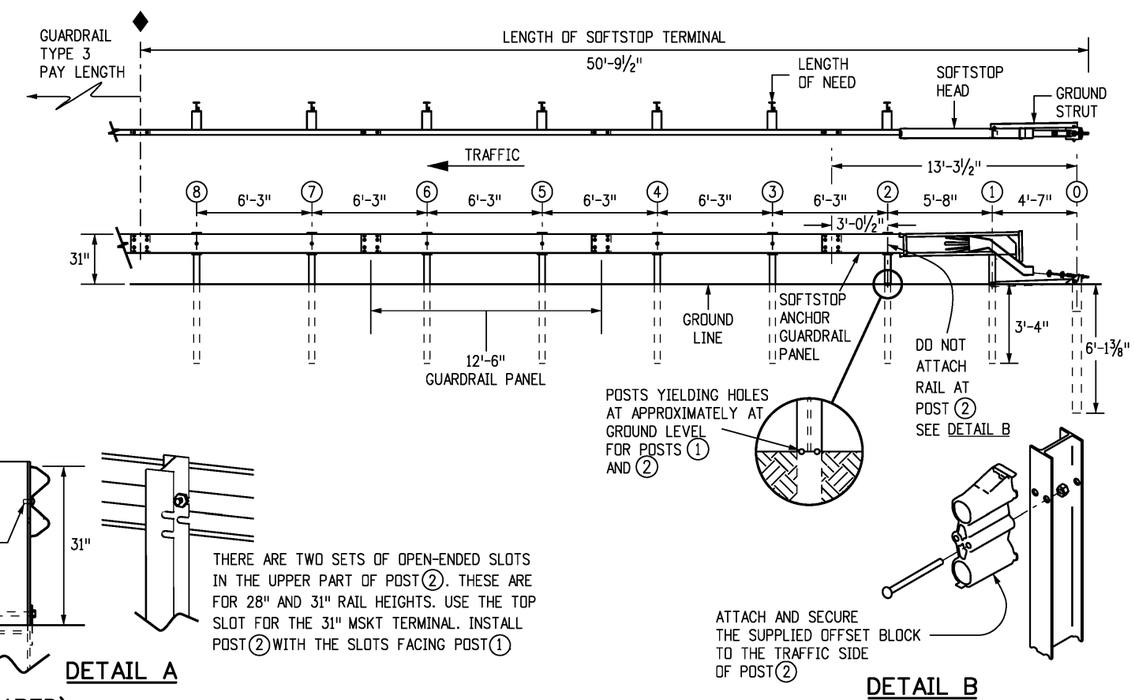

DETAIL B

SOFTSTOP TERMINAL END ANCHORAGE (NONFLARED)

(MASH CERTIFIED)

END ANCHORAGES (NONFLARED)

Computer File Information		Sheet Revisions	
Creation Date: 07/31/19		Date:	Comments
Designer Initials: JBK	(R-X)		
Last Modification Date: 03/05/20	(R-X)		
Detailer Initials: LTA	(R-X)		
CAD Ver.: MicroStation V8 Scale: Not to Scale Units: English	(R-X)		

Colorado Department of Transportation
2829 West Howard Place
CDOT HQ, 3rd Floor
Denver, CO 80204
Phone: 303-757-9021 FAX: 303-757-9868
Project Development Branch JBK

MIDWEST GUARDRAIL SYSTEM (MGS) TYPE 3 W-BEAM 31 INCHES

Issued by the Project Development Branch: July 31, 2019

STANDARD PLAN NO.
M-606-1
Standard Sheet No. 8 of 19
Project Sheet Number:

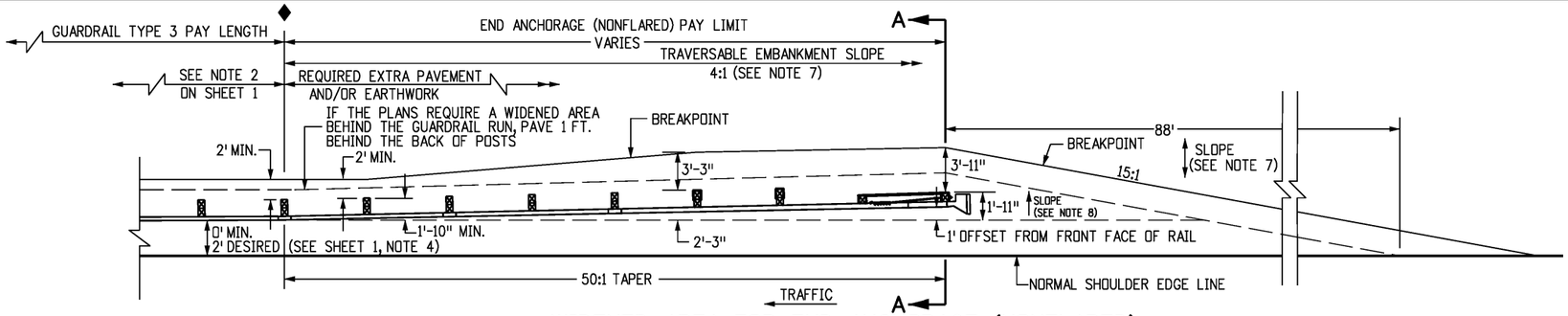

◆ END OF GUARDRAIL PAY LENGTH

WIDENED AREA FOR END ANCHORAGE (NONFLARED)
PLAN VIEW

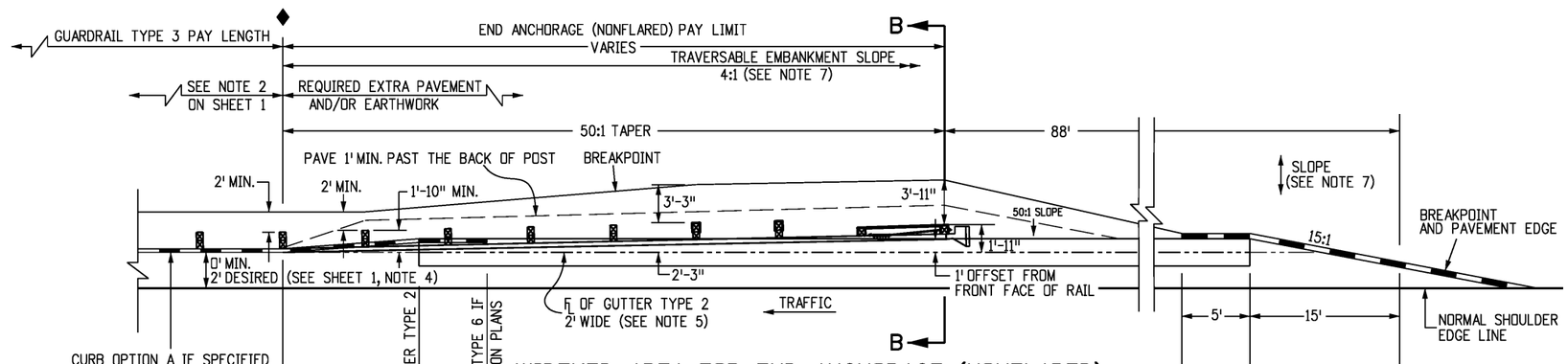

WIDENED AREA FOR END ANCHORAGE (NONFLARED)
WITH CURB OPTION A
PLAN VIEW

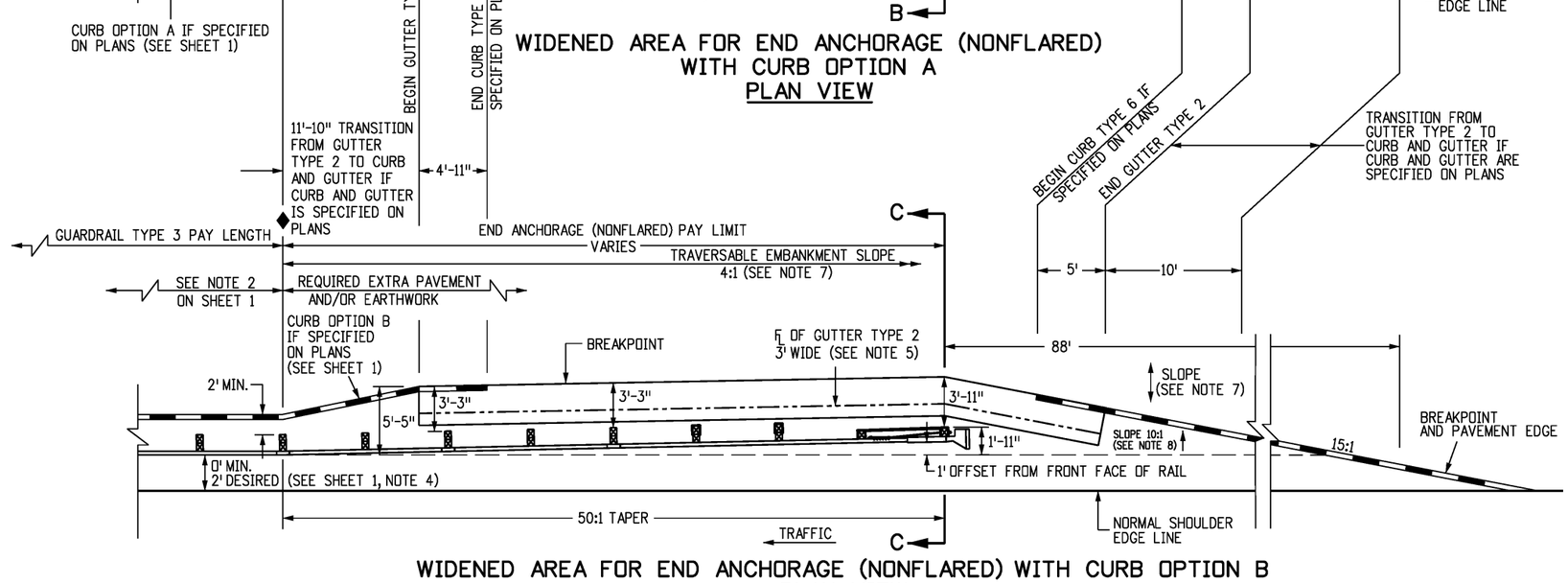

WIDENED AREA FOR END ANCHORAGE (NONFLARED) WITH CURB OPTION B
PLAN VIEW

NOTES

1. PAYMENT FOR THE ADDED EMBANKMENT (APPROXIMATELY 25 CU. YDS.) FOR THE FLARE SHALL BE AS FOLLOWS:
   A. UNDER PAY ITEM 203 WHEN THE CONTRACT PLAN INCLUDES PAY ITEM 203.
   B. INCLUDED IN THE COST OF THE END ANCHORAGE (NONFLARED) WHEN THE CONTRACT PLANS DOES NOT INCLUDE PAY ITEM 203. THE ADDED EMBANKMENT SHALL BE BE CONSTRUCTED IN ACCORDANCE WITH SUBSECTION 203.07, AASHTO T 99.
2. WHEN THE WIDENED AREA IS PAVED, PAYMENT FOR THE PAVEMENT (APPROX. 39 SQ. YDS.) SHALL BE AS FOLLOWS:
   A. UNDER PAY ITEM 403 OR 412 WHEN THE CONTRACT PLAN INCLUDES PAY ITEM 403 OR 412.
   B. INCLUDED IN THE COST OF THE END ANCHORAGE (NONFLARED) WHEN THE CONTRACT PLAN DOES NOT INCLUDE PAY ITEM 403 OR 412, (SEE SHEET 1, NOTE 2 FOR PAYMENT TYPES).
3. WHEN OVERLAY PAVING, THE FINISHED SURFACE AT EACH POST SHALL NOT BE ABOVE THE TOP BREAKWAY HOLE OR STRUT ASSEMBLY. THE WIDENED AREA AT THE END ANCHORAGE (NONFLARED) SHALL NOT BE OVERLAYED UNLESS PAVEMENT CONDITIONS WARRANT IT BEING OVERLAYED. ANY OVERLAY PAVEMENT ABUTTING THE END ANCHORAGE (NONFLARED) SHALL BE TAPERED TO PREVENT A DROP IN THE PAVED SURFACE BELOW THE RAIL.
4. SEE SHEETS 1, 2, 3, AND 5 FOR STANDARD TYPE 3 GUARDRAIL INSTALLATION DETAILS.
5. THE COST OF THE GUTTER WILL BE PAID FOR AS "GUTTER TYPE 2 (2 FT.)" FOR A LENGTH OF 111 FT., OR "GUTTER TY. 2 (3 FT.)" FOR A LENGTH OF 50 FT.
6. INLETS OR RUNDOWNS MAY BE USED INSTEAD OF THE GUTTER IF SPECIFIED ON THE PLANS. NO ADDITIONAL CURB SHALL BE ADDED IN THE VICINITY OF THE END TREATMENT.
7. 4:1 OR FLATTER SLOPES IN THE TRAVERSABLE AREA SHALL BE USED BEHIND THE END ANCHORAGE AREA, AND IN ADVANCE OF POST (1) IF THIS IS NOT POSSIBLE A MINIMUM 3:1 SLOPE MAY BE USED IF APPROVED BY THE ENGINEER.
8. THE WIDENED AREA, EXCEPT FOR CURB OPTION A, SHALL HAVE THE SAME GRADING AS BENEATH THE ADJACENT GUARDRAIL: 10:1 OR FLATTER IF MORE THAN 2 FT. FROM SHOULDER, OR SLOPE EQUAL TO ROADWAY SLOPE IF 2 FT. OR LESS FROM SHOULDER.
9. WIDENING FOR END ANCHORAGES SHALL BE PAVED ON INTERSTATES AND FREEWAYS. FOR OTHER HIGHWAYS, PAVING SHALL BE AS SHOWN ON THE PLANS.

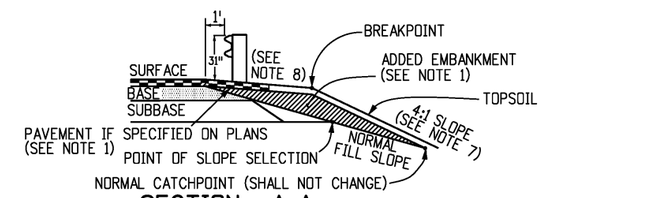

SECTION A-A

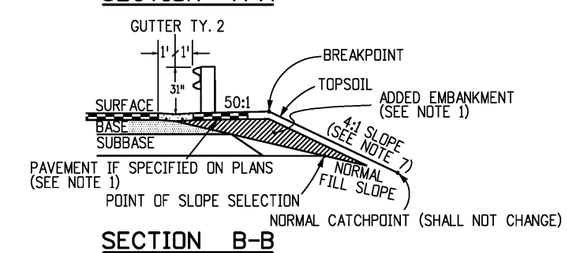

SECTION B-B

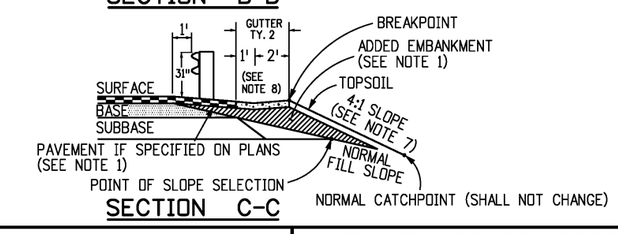

SECTION C-C

Computer File Information		Sheet Revisions	
Creation Date: 07/31/19		Date:	Comments
Designer Initials: JBK	(R-X)		
Last Modification Date: 03/05/20	(R-X)		
Detailer Initials: LTA	(R-X)		
CAD Ver.: MicroStation V8 Scale: Not to Scale Units: English	(R-X)		

Colorado Department of Transportation
2829 West Howard Place
CDOT HQ, 3rd Floor
Denver, CO 80204
Phone: 303-757-9021 FAX: 303-757-9868
Project Development Branch JBK

MIDWEST
GUARDRAIL SYSTEM (MGS)
TYPE 3 W-BEAM 31 INCHES

Issued by the Project Development Branch: July 31, 2019

STANDARD PLAN NO.
M-606-1
Standard Sheet No. 9 of 19
Project Sheet Number:

MEDIAN TERMINAL NOTES

1. THE MEDIAN TERMINAL SHALL BE THE MAX-TENSION MEDIAN AS MANUFACTURED BY BY BARRIER SYSTEM BY LINDSAY (LINDSAY TRANSPORTATION SOLUTIONS) (TEL #: 888 800-3691).
2. THE MAX-TENSION SHALL BE APPLIED DIRECTLY TO W-BEAM GUARDRAIL SYSTEMS AT, OR TRANSITIONED TO, 31 INCH WITH PANELS AND POST SPACING CONFIGURED AT MID-SPAN SPLICE. TRANSITIONS TO STRONG POST W-BEAM GUARDRAIL SYSTEMS OR OTHER BARRIERS WHERE THE SPLICE IS NOT MID-SPAN SHALL BE ACCOMPLISHED USING A 3 FT. 1-1/2 INCH, 9 FT. 4-1/2 INCH OR 15 FT. 7-1/2 INCH PANELS AFTER THE MAX-TENSION SYSTEM (MIN. OF 50 FT. DOWNSTREAM OF THE FIRST POST). TRANSITIONS TO OTHER BARRIER SYSTEMS SHALL ALSO BE AT A MIN. OF 50 FT. DOWNSTREAM FROM THE FIRST POST. SEE SHEET 4.
3. THE MAX-TENSION SHALL NOT BE ATTACHED DIRECTLY TO RIGID BARRIERS SUCH AS CONCRETE BARRIERS, STEEL BARRIERS OR CONCRETE STRUCTURES WITHOUT PROPER TRANSITION. IF ROCK OR STIFF SOIL IS ENCOUNTERED, THE POSTS AND SOIL ANCHOR MAY BE INSTALLED BY AUGURING AND BACKFILLING THE HOLE.
4. EITHER 8 INCH OR 12 INCH COMPOSITE OR TIMBER BLOCKOUTS SHALL BE USED PER MANUFACTURE'S RECOMMENDATIONS.
5. EITHER 12 FT.-6 INCH OR 25 FOOT PANELS SHALL BE USED DEPENDING ON SITE CONDITIONS OR CONNECTED BARRIER SYSTEMS.
6. RAIL PANELS SHALL BE LAPPED PER MANUFACTURER'S INSTALLATION MANUAL, REGARDLESS OF AN UPSTREAM OR DOWNSTREAM END SYSTEM POSITION.
7. ALL STEEL COMPONENTS SHALL BE GALVANIZED PER ASTM A123 OR EQUIVALENT UNLESS OTHERWISE STATED.
8. ONE MEDIAN TERMINAL SHALL INCLUDE ALL POSTS, RAIL, AND HARDWARE ITEMS REQUIRED FOR A COMPLETE UNIT. THE DEVICE SHALL BE INSTALLED IN CONFORMANCE WITH THE MANUFACTURER'S INSTRUCTIONS. THE CONTRACTOR SHALL PROVIDE A COPY OF THE MANUFACTURER'S INSTALLATION INSTRUCTIONS AND PARTS LISTS TO THE ENGINEER PRIOR TO THE INSTALLATION OF THE DEVICE.
9. UNLESS OTHERWISE SPECIFIED ON THE PLANS, THE MEDIAN TERMINAL SHALL BE INSTALLED FOR BIDIRECTIONAL TRAFFIC APPLICATION.
10. EACH INSTALLATION SHALL BE SUPERVISED AND CERTIFIED AS CORRECT UPON COMPLETION BY A REPRESENTATIVE OF THE DEVICE MANUFACTURER OR BY AN EMPLOYEE OF THE CONTRACTOR WHO IS A CERTIFIED INSTALLER. THE CERTIFIED INSTALLER SHALL HAVE COMPLETED DEVICE TRAINING AND SHALL BE REGISTERED WITH THE MANUFACTURER AS A CERTIFIED INSTALLER.
11. DELINEATION, IF REQUIRED, SHALL BE APPLIED TO THE END PIECE AND WILL NOT BE PAID FOR SEPARATELY BUT SHALL BE INCLUDED IN THE COST OF THE WORK. SEE STANDARD PLAN S-612-1.

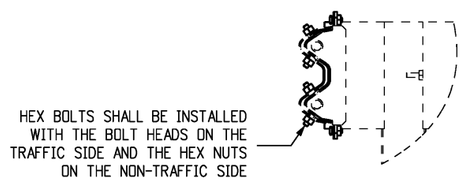

SECTION A-A

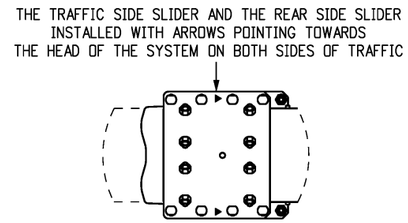

DETAIL A

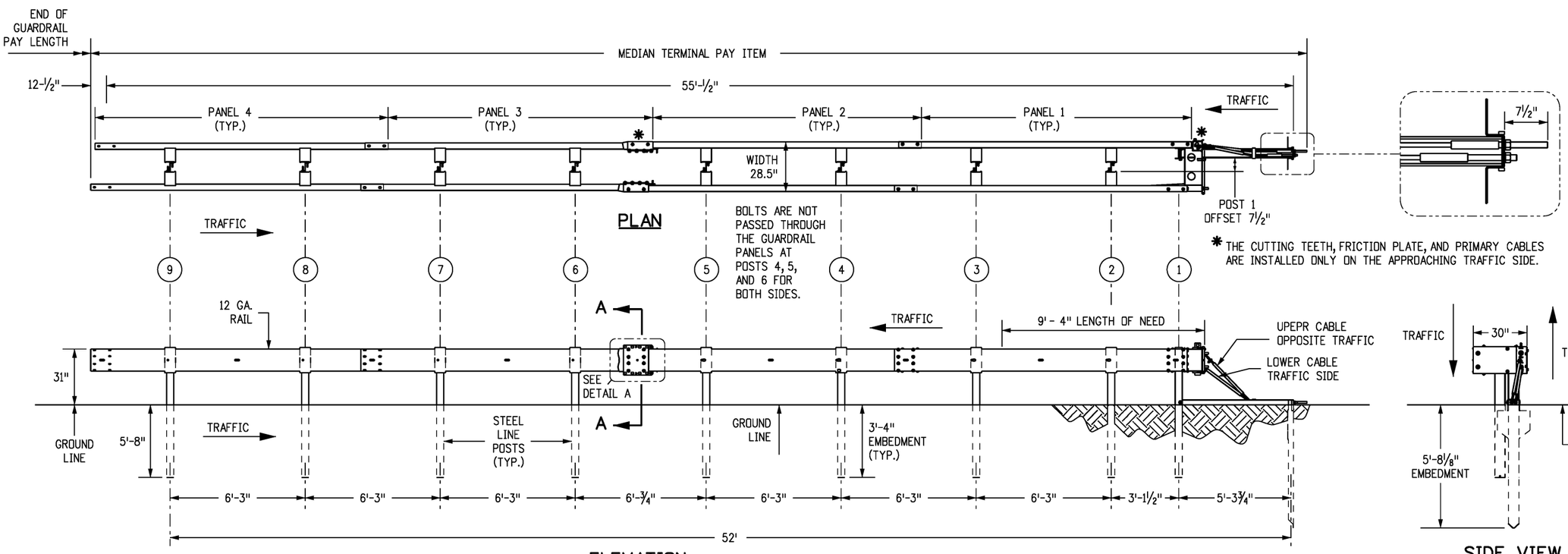

MAX-TENSION MEDIAN

(MASH CERTIFIED)

Computer File Information		Sheet Revisions	
Creation Date: 07/31/19		Date:	Comments
Designer Initials: JBK	(R-X)		
Last Modification Date: 03/05/20	(R-X)		
Detailer Initials: LTA	(R-X)		
CAD Ver.: MicroStation V8 Scale: Not to Scale Units: English	(R-X)		

Colorado Department of Transportation
2829 West Howard Place
CDOT HQ, 3rd Floor
Denver, CO 80204
Phone: 303-757-9021 FAX: 303-757-9868
Project Development Branch JBK

MIDWEST GUARDRAIL SYSTEM (MGS) TYPE 3 W-BEAM 31 INCHES

Issued by the Project Development Branch: July 31, 2019

STANDARD PLAN NO.
M-606-1
Standard Sheet No. 10 of 19
Project Sheet Number:

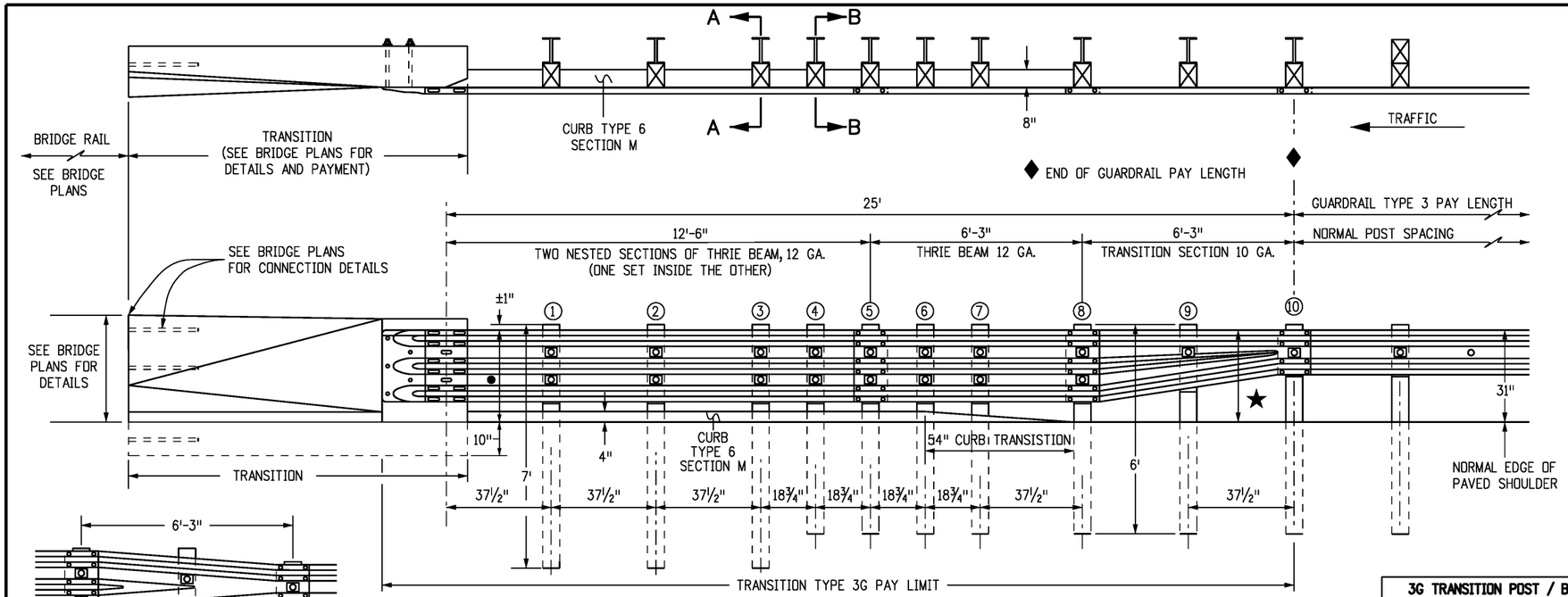

TRANSITION TYPE 3G

ALL POSTS SHALL BE STEEL

★ IF THE HEIGHT OF THE TRANSITION TYPES 3G OR 3H IS MORE THAN 31", THEN A SYMMETRICAL TRANSITION SECTION SHALL BE USED HERE.

● 31" FOR ASPHALT BRIDGE OVERLAY. 33.25" FOR POLYMER CONCRETE BRIDGE OVERLAY.

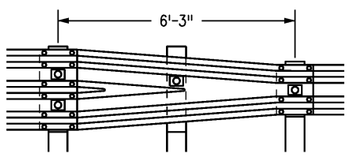

SYMMETRICAL TRANSITION SECTION

NOTES

1. TRANSITION TYPE 3G IS FOR USE AT BOTH ENDS OF BRIDGES ON TWO-WAY HIGHWAYS AND AT THE APPROACH END OF BRIDGES ON ONE-WAY HIGHWAYS.
2. TRANSITION TYPE 3H IS FOR USE AT THE TRAILING END OF BRIDGES ON ONE-WAY HIGHWAYS.
3. THE THRIE BEAM SECTION IN TRANSITION TYPES 3G AND 3H MAY BE SHOP BENT TO FIT CORRESPONDING RADIUS CURVES. HOWEVER, THE 6 FT.-3 IN. TRANSITION SECTION SHALL NOT BE BENT.
4. A TRANSITION SHALL BE REQUIRED BETWEEN TYPES 3G OR 3H AND THE BRIDGE RAILS. SEE STANDARD PLAN M-606-15 FOR THE TRANSITION TO TYPE 9 GUARDRAIL BARRIER.
5. TRANSITION TYPES 3G AND 3H ARE BOTH MASH COMPLIANT.
6. BACKUP PLATE IS NOT REQUIRED AT POSTS ON TYPE 3G AND 3H.
7. ▣ THIS SYMBOL IN THE ELEVATION DRAWINGS SHOWS THE LOCATIONS WHERE A RECTANGULAR WASHER IS REQUIRED UNDER THE POST BOLT HEAD.
8. CURB TYPE 6 SECTION M, MAY BE ASPHALT OR CONCRETE. THE COST OF CURB IS INCLUDED IN THE WORK, UNLESS A SEPARATE PAY ITEM IS INCLUDED IN THE BID SCHEDULE.
9. FOR TYPE 3G, POSTS ① THRU ③ ARE 7 FT. LONG. ALL OTHER POSTS SHALL BE A STANDARD 6 FT. LONG UNLESS OTHERWISE SPECIFIED IN THE CONTRACT.
10. NOTCHED RAIL BLOCKS MANUFACTURED FROM SYNTHETIC MATERIAL WILL BE ACCEPTED AS ALTERNATIVES TO WOOD NOTCHED BLOCKS FOR USE WITH STEEL POSTS PROVIDED THAT THE BLOCKS HAVE RECEIVED FHWA APPROVAL AND ARE CERTIFIED AS IDENTICAL TO THE SPECIMENS USED FOR TESTING AND APPROVAL. STEEL BLOCKS ARE NOT ALLOWED.

3G TRANSITION POST / BLOCK SIZING

POST #	STEEL POST SIZE	BLOCKOUT SIZE
1 - 3	84" W6 X 15	6" X 12" X 19"
4 - 9	72" W6 X 9	6" X 12" X 19"
10	72" W6 X 9	6" X 12" X 14"

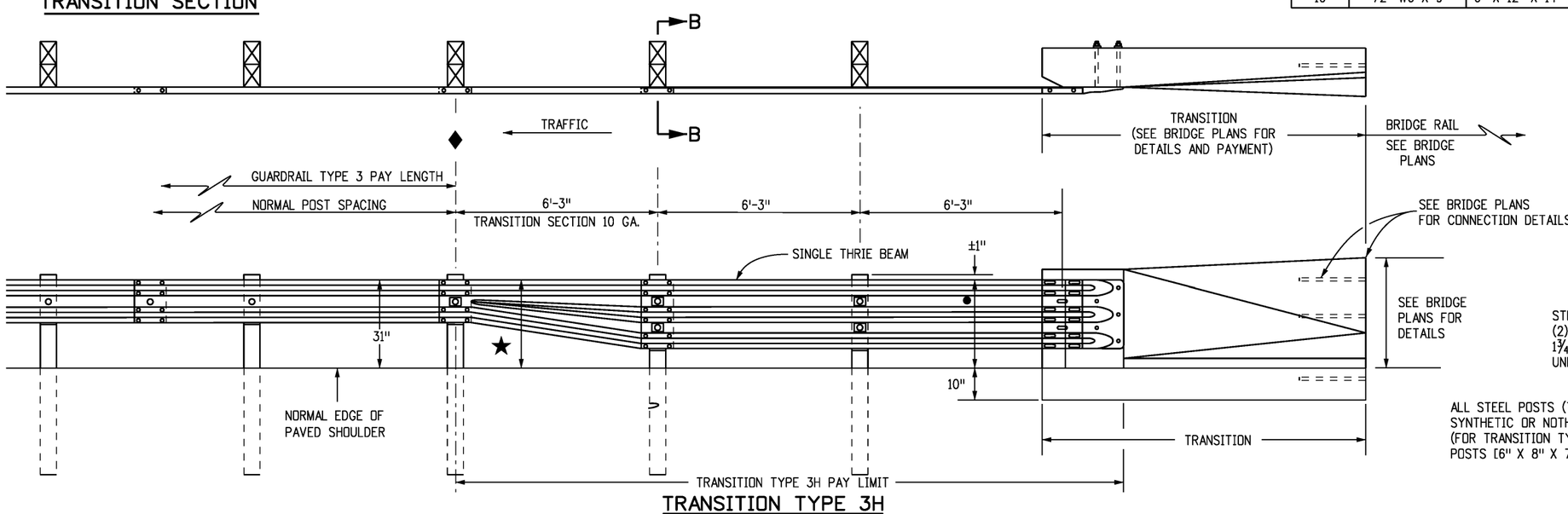

TRANSITION TYPE 3H

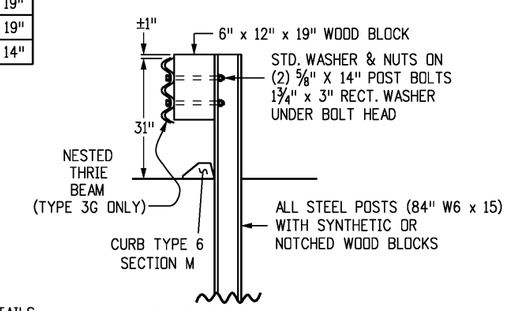

SECTION A-A

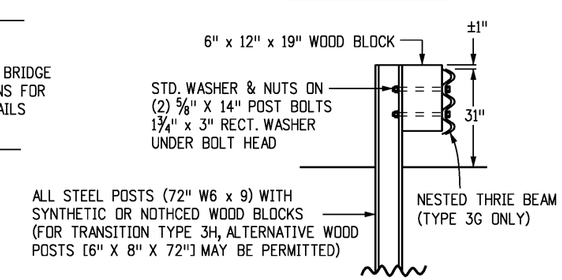

SECTION B-B

Computer File Information	
Creation Date: 07/31/19	
Designer Initials: JBK	(R-X)
Last Modification Date: 03/05/20	(R-X)
Detailer Initials: LTA	(R-X)
CAD Ver.: MicroStation V8 Scale: Not to Scale Units: English	(R-X)

Sheet Revisions

Date:	Comments
03/05/20	Revised Gen. Notes 3 & 5. Revised transition sections notes to see the "Bridge Plans" and deleted their x-sections details. Revised the ★ note.

Colorado Department of Transportation
2829 West Howard Place
CDOT HQ, 3rd Floor
Denver, CO 80204
Phone: 303-757-9021 FAX: 303-757-9868
Project Development Branch JBK

MIDWEST GUARDRAIL SYSTEM (MGS) TYPE 3 W-BEAM 31 INCHES

Issued by the Project Development Branch: July 31, 2019

STANDARD PLAN NO.
M-606-1
Standard Sheet No. 11 of 19
Project Sheet Number:

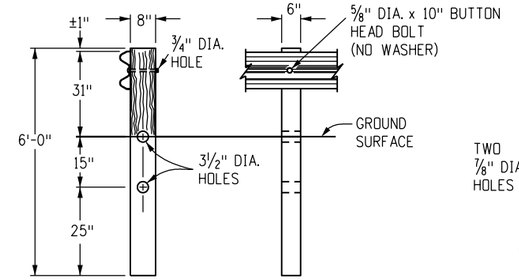

CONTROLLED RELEASING TERMINAL (CRT) POST ①

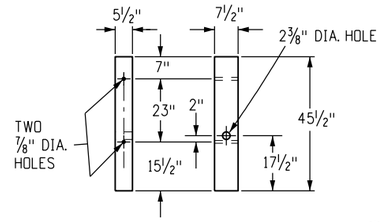

WOOD BREAKAWAY POST ②

POST	DIMENSIONS	TYPE
①	6" x 8" x 6'	CRT
②	5 1/2" x 7 1/2" x 45 1/2"	BREAKAWAY

POSTS

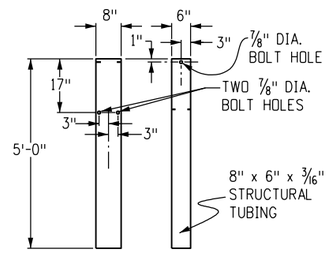

STEEL TUBE

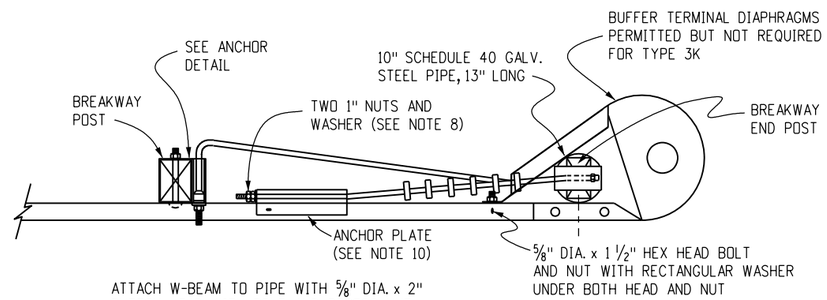

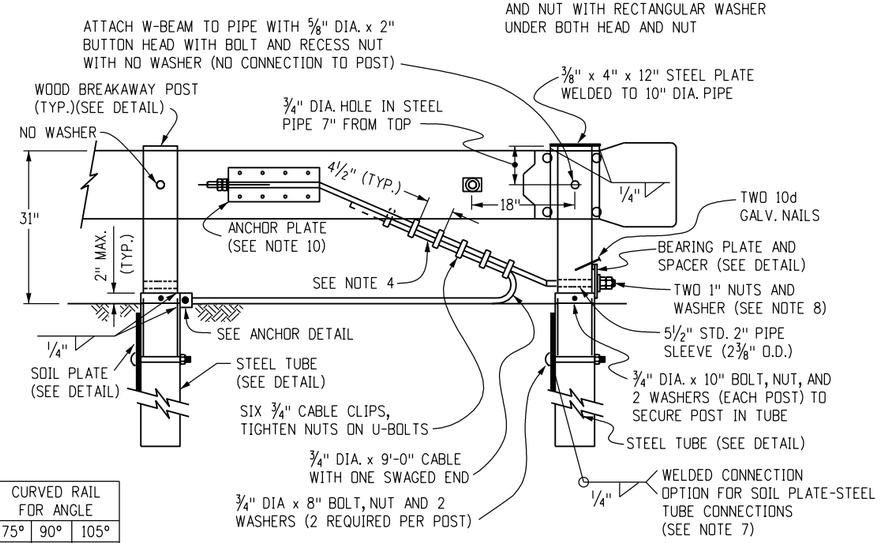

LOW SPEED END ANCHORAGE - TYPE 3K

NOTES

1. APPLICATION: THE TRANSITION TYPE 3J MAY BE USED TO SHIELD HAZARDS AT THE INTERSECTION OF TWO ROADWAYS. TYPICAL APPLICATIONS INCLUDE, BUT ARE NOT LIMITED TO, THE FOLLOWING:
   A. CANAL SERVICE ROADS AT BRIDGE ENDS.
   B. INTERRUPTIONS IN GUARDRAIL RUNS BY INTERSECTING ROADWAYS, ETC.

   THE LOW SPEED (<45 MPH) END ANCHORAGE TYPE 3K SHALL BE USED ONLY ON DRIVEWAYS AND LOW SPEED SERVICE ROADS. ***END ANCHORAGE TYPE 3K IS NOT CRASHWORTHY.*** WHEN AN APPROVED CRASH-TESTED END TREATMENT IS REQUIRED, USE THE END ANCHORAGE (FLARED) OR (NONFLARED) WITH 37 FT.-6 IN. LENGTH.
2. GRADING AND PAVING FOR THE 3J & 3K SHALL MATCH THE GRADING AND PAVING OF THE GUARDRAIL TO WHICH THEY ARE ATTACHED, AND SHALL BE IN ACCORDANCE WITH SHEET ONE OF THIS STANDARD. MAXIMUM FILL SLOPE SHALL BE 2:1.
3. THE RAIL IS NOT BOLTED TO THE CRT POST AT THE CENTER OF THE CURVE FOR THE 8 FT.-6 IN., 17 FT., AND 25 FT.-6 IN. RADII. PLATES SHALL CONFORM TO ASTM A 36, AND THE STRUCTURAL TUBING TO ASTM A 500.
4. THE 3/4IN. GALVANIZED WIRE ROPE (CABLE) SHALL CONFORM TO AASHTO M 30 TYPE II.
5. PLATES SHALL CONFORM TO ASTM A 36, AND STRUCTURAL TUBING TO ASTM A 500. WELDING SHALL MEET ALL REQUIREMENTS OF THE AMERICAN WELDING SOCIETY.
6. ALL STRUCTURAL STEEL SHALL BE GALVANIZED IN CONFORMANCE WITH ASTM A 123. POSTS SHALL NOT BE PUNCHED, DRILLED, CUT, OR WELDED AFTER GALVANIZING.
7. WHEN THE SOIL PLATE WELDED OPTION IS SELECTED, SOIL PLATE CONNECTION BOLT HOLES ARE NOT REQUIRED.
8. OUTSIDE NUT SHALL BE TORQUED AGAINST INSIDE NUT WITH THE CABLE INSTALLED TAUT BETWEEN THE ANCHOR PLATE AND FIRST POST.
9. ALL CURVED GUARDRAIL SHALL BE SHOP BENT.
10. SEE SHEET 5 FOR ANCHOR PLATE AND OTHER DETAILS.
11. THE STEEL TUBE MAY BE DRIVEN WITH WOOD POST INSERTED IF NO DAMAGE OCCURS TO THE POST OR BOLTS.

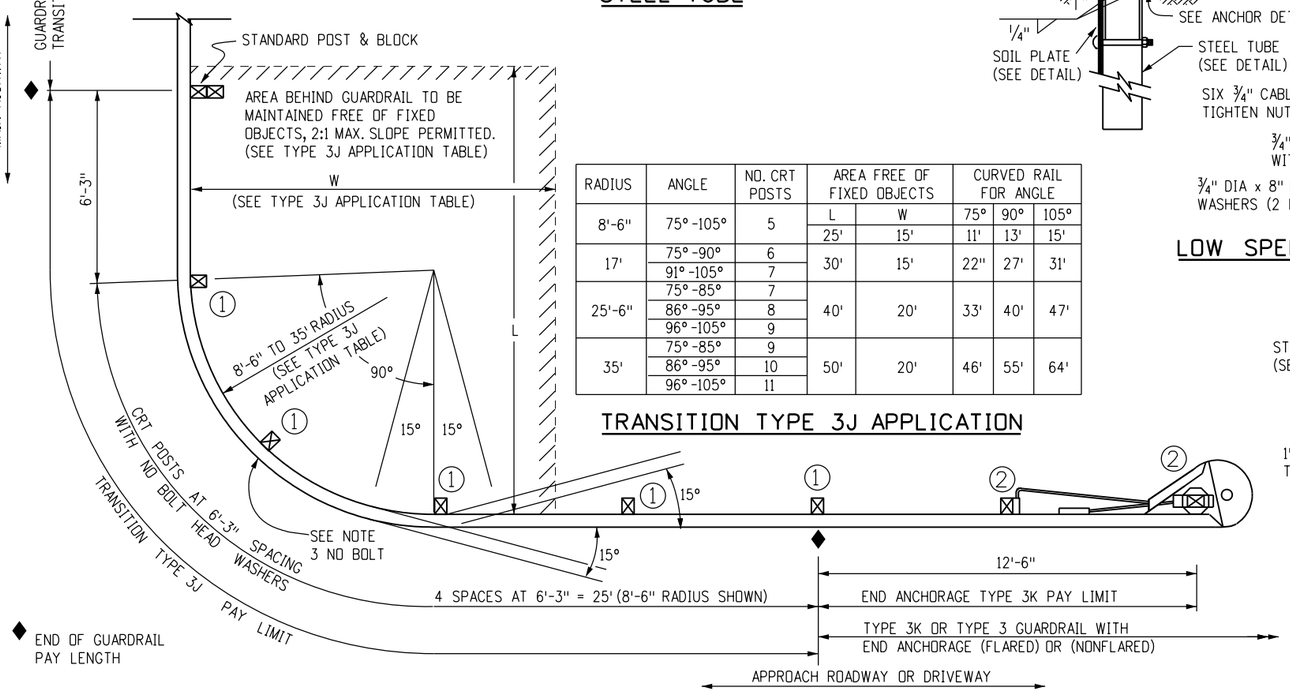

RADIUS	ANGLE	NO. CRT POSTS	AREA FREE OF FIXED OBJECTS		CURVED RAIL FOR ANGLE		
			L	W	75°	90°	105°
8'-6"	75°-105°	5	25'	15'	11'	13'	15'
17'	75°-90°	6	30'	15'	22"	27'	31'
	91°-105°	7					
25'-6"	75°-85°	7	40'	20'	33'	40'	47'
	86°-95°	8					
	96°-105°	9					
35'	75°-85°	9	50'	20'	46'	55'	64'
	86°-95°	10					
	96°-105°	11					

TRANSITION TYPE 3J APPLICATION

INTERSECTING ROADWAYS TRANSITION - TYPE 3J TRANSITION

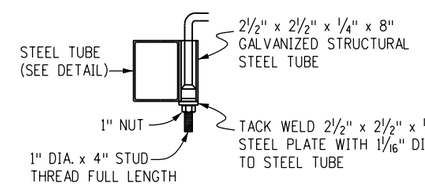

ANCHOR DETAIL

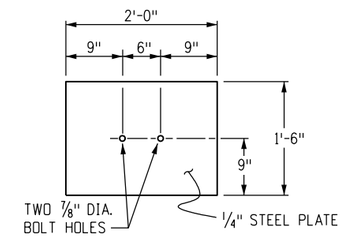

SOIL PLATE

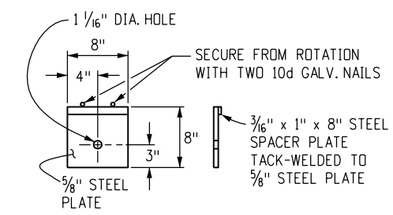

BEARING PLATE FOR STEEL TUBE

Computer File Information		Sheet Revisions	
Creation Date: 07/31/19		Date:	Comments
Designer Initials: JBK	R-X		
Last Modification Date: 03/05/20	R-X		
Detailer Initials: LTA	R-X		
CAD Ver.: MicroStation V8 Scale: Not to Scale Units: English	R-X		

Colorado Department of Transportation
2829 West Howard Place
CDOT HQ, 3rd Floor
Denver, CO 80204
Phone: 303-757-9021 FAX: 303-757-9868
Project Development Branch JBK

MIDWEST GUARDRAIL SYSTEM (MGS) TYPE 3 W-BEAM 31 INCHES

Issued by the Project Development Branch: July 31, 2019

STANDARD PLAN NO.
M-606-1
Standard Sheet No. 12 of 19
Project Sheet Number:

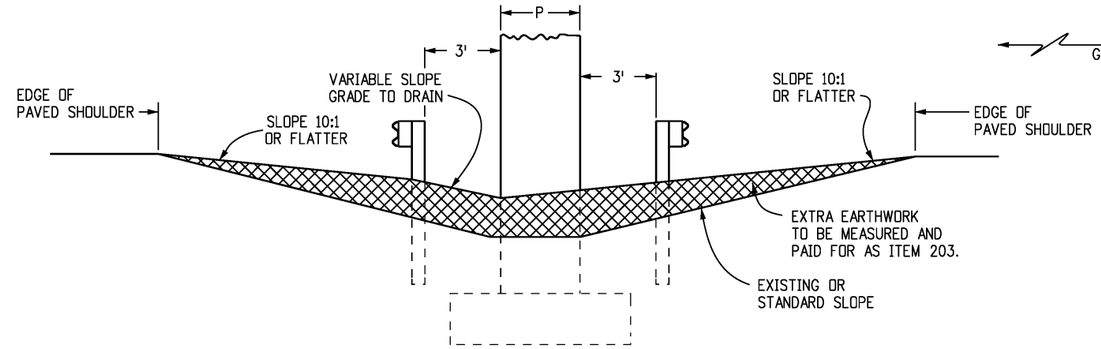

SECTION J-J

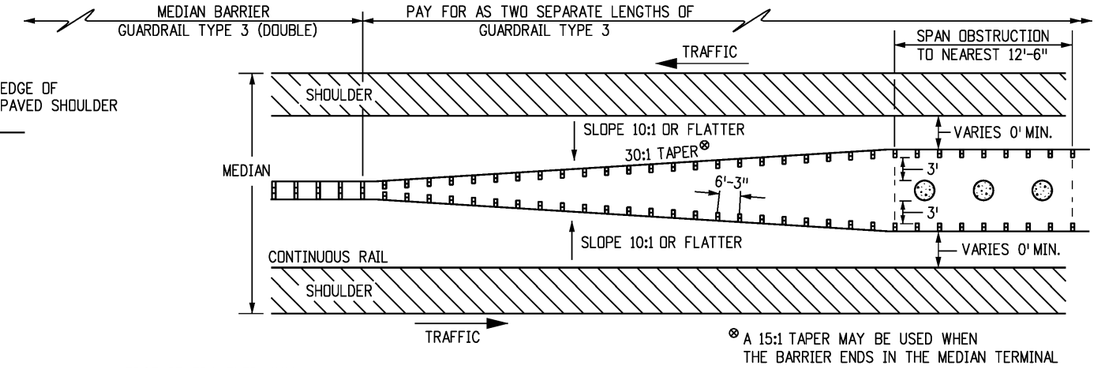

⊗ A 15:1 TAPER MAY BE USED WHEN THE BARRIER ENDS IN THE MEDIAN TERMINAL

OBSTRUCTION IN MEDIAN 30 FT. WIDE OR LESS

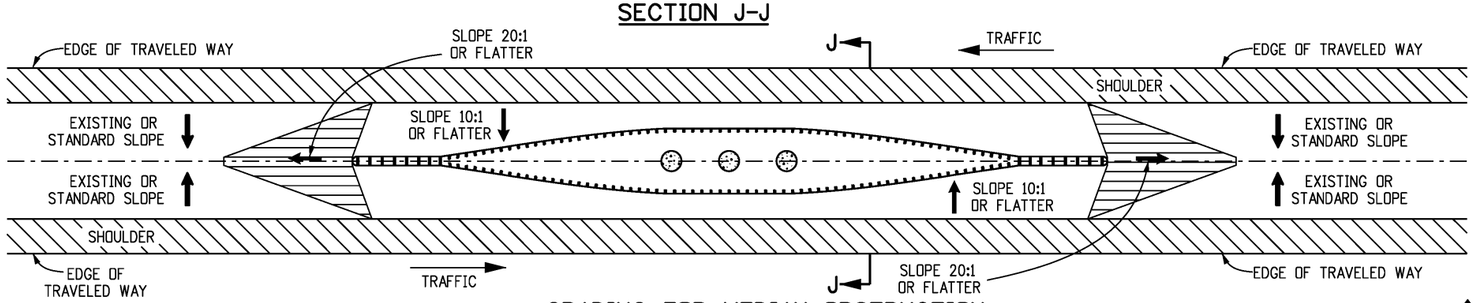

GRADING FOR MEDIAN OBSTRUCTION

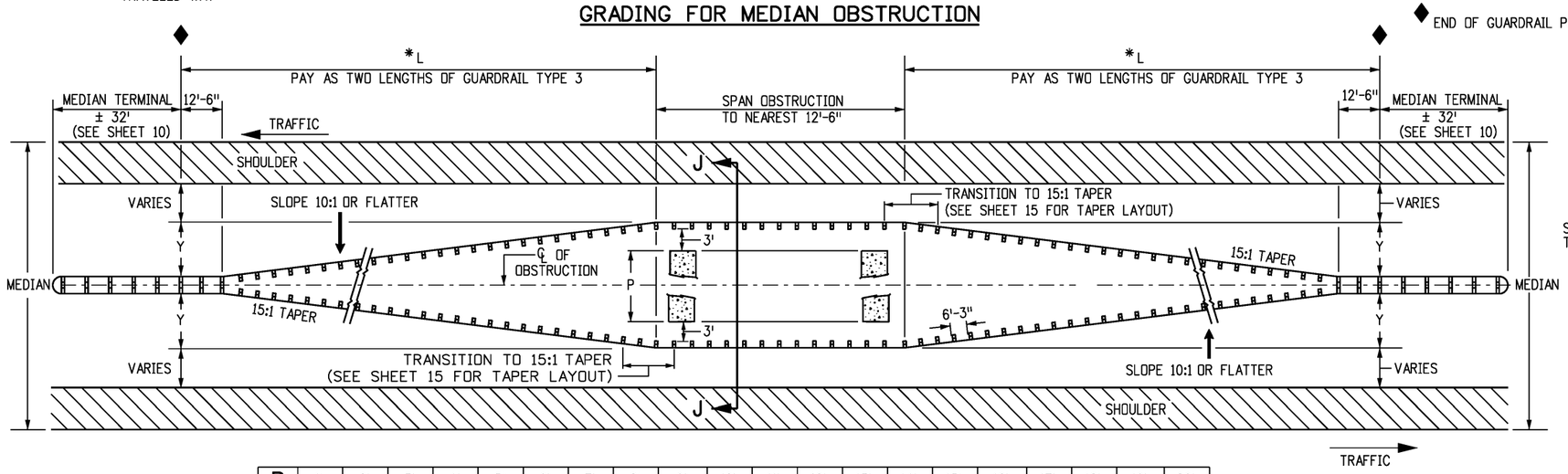

P	1'	2'	3'	4'	5'	6'	7'	8'	9'	10'	11'	12'	13'	14'	15'	16'	17'	18'	19'	20'
Y	4'-1"	4'-7"	5'-1"	5'-7"	6'-1"	6'-7"	7'-1"	7'-7"	8'-1"	8'-7"	9'-1"	9'-7"	10'-1"	10'-7"	11'-1"	11'-7"	12'-1"	12'-7"	13'-1"	13'-7"
L	75'	87'-6"		100'	112'-6"		125'		137'-6"	150'		162'-6"		175'		187'-6"	200'		212'-6"	225'

*L IS MEASURED ALONG FACE OF GUARDRAIL

GUARDRAIL FOR OBSTRUCTION IN MEDIANS WIDER THAN 30 FT.

NOTE: FOR OBSTRUCTIONS (P) THAT ARE WIDER THAN 20 FT. IN MEDIANS USE SHEET 16.

D	F
1'	10'
2'	18'
3'	28'
4'	38'
5'	48'

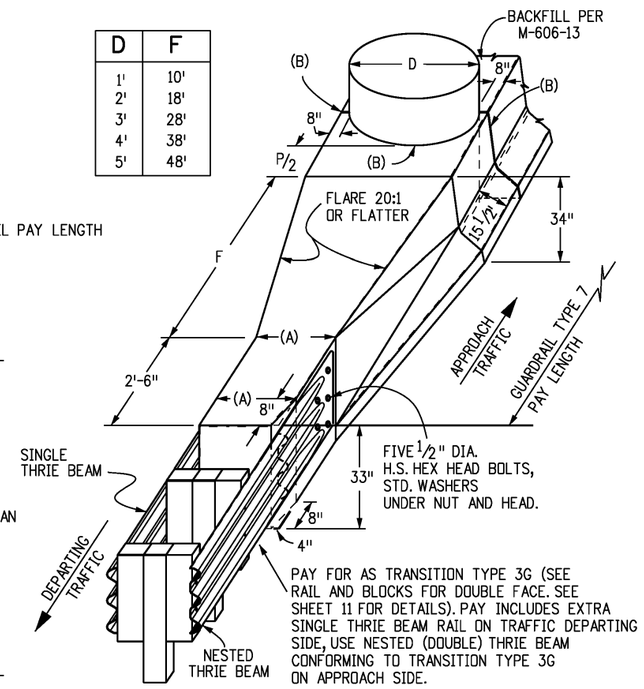

(A). TIMBER POSTS 2 FT., STEEL POSTS 1 FT.-9½IN.

(B). ½ IN. PREFORMED JOINT MATERIAL

NARROW MEDIAN DETAIL

USUALLY LESS THAN 30 FT. WIDE MEDIAN WITH ALL PAVED SURFACE

OBSTRUCTIONS IN MEDIANS

Computer File Information		Sheet Revisions	
Creation Date: 07/31/19		Date:	Comments
Designer Initials: JBK	(R-X)		
Last Modification Date: 03/05/20	(R-X)		
Detailer Initials: LTA	(R-X)		
CAD Ver.: MicroStation V8 Scale: Not to Scale Units: English	(R-X)		

Colorado Department of Transportation
2829 West Howard Place
CDOT HQ, 3rd Floor
Denver, CO 80204
Phone: 303-757-9021 FAX: 303-757-9868
Project Development Branch JBK

MIDWEST GUARDRAIL SYSTEM (MGS) TYPE 3 W-BEAM 31 INCHES

Issued by the Project Development Branch: July 31, 2019

STANDARD PLAN NO.

M-606-1

Standard Sheet No. 13 of 19

Project Sheet Number:

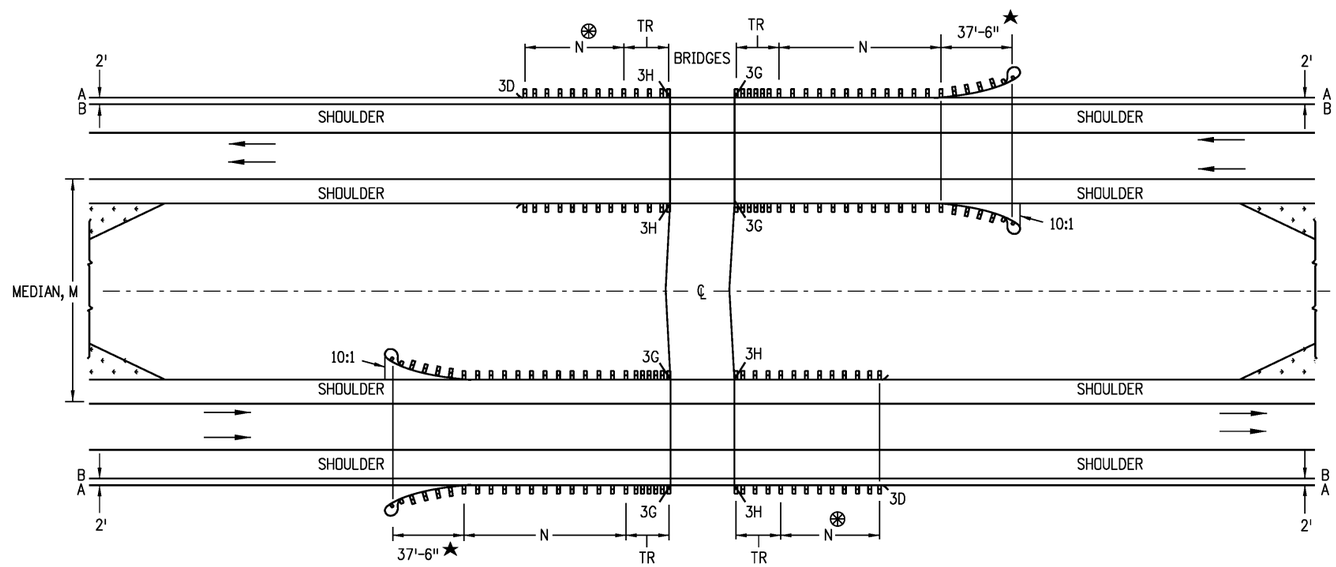

MULTILANE DIVIDED HIGHWAYS FOR STEEP EMBANKMENTS IN MEDIAN

NOTES

1. MEDIAN BARRIERS TANGENT TO THE ROADWAY MAY BE USED WHERE THE SHOULDER SLOPES IN THE MEDIAN ARE STEEP.
2. BARRIER LENGTHS SHALL BE INCREASED TO ACCOUNT FOR STEEP EMBANKMENTS OR OTHER HAZARDS WITHIN CLOSE PROXIMITY OF BRIDGES.

⊛ — DO NOT CONSTRUCT THE TR AND GUARDRAIL ON THE TRAILING BRIDGE ENDS IF SITE CONDITIONS DO NOT WARRANT THE USE OF GUARDRAIL.

N — SHOWN ON PLANS. LENGTH TO SHIELD ALL HAZARDS IS BASED ON GUARDRAIL'S LENGTH OF NEED COMPUTATION. SEE AASHTO ROADWAY DESIGN GUIDE. THE MINIMUM SHALL BE 12 FT. - 6 IN., WHERE SITE CONDITIONS ALLOW. THE TOTAL LENGTH OF NEED WILL INCLUDE THE LENGTH OF TRANSITION, THE LENGTH OF RAIL (N), AND ANY REDIRECTIVE LENGTH IN THE RAIL END TREATMENT.

TR — 25 FEET FOR TRANSITION TYPES 3G AND 3H.

A — EDGE OF 8 FT. OR 10 FT. SHOULDER.

B — EDGE OF 6 FT. OR LESS SHOULDER.

★ — END ANCHORAGE CAN BE FLARED OR NONFLARED.

Computer File Information		Sheet Revisions	
Creation Date: 07/31/19		Date:	Comments
Designer Initials: JBK	(R-X)		
Last Modification Date: 03/05/20	(R-X)		
Detailer Initials: LTA	(R-X)		
CAD Ver.: MicroStation V8 Scale: Not to Scale Units: English	(R-X)		

Colorado Department of Transportation
2829 West Howard Place
CDOT HQ, 3rd Floor
Denver, CO 80204
Phone: 303-757-9021 FAX: 303-757-9868
Project Development Branch JBK

MIDWEST
GUARDRAIL SYSTEM (MGS)
TYPE 3 W-BEAM 31 INCHES

Issued by the Project Development Branch: July 31, 2019

STANDARD PLAN NO.
M-606-1
Standard Sheet No. 14 of 19
Project Sheet Number:

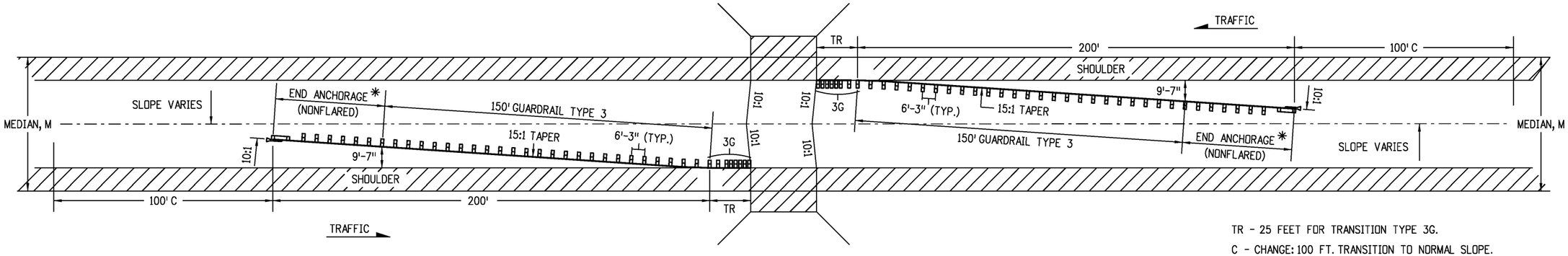

TR - 25 FEET FOR TRANSITION TYPE 3G.

C - CHANGE: 100 FT. TRANSITION TO NORMAL SLOPE.

M - WIDTH OF MEDIAN.

MEDIANS 60 FT. AND OVER WITH 10 FT. OR WIDER SHOULDERS.

* END ANCHORAGE LENGTH AND FLARE RATES VARY BY DEVICE.
SEE MANUFACTUERER/SUPPLIER FOR INSTALLATION REQUIREMENTS.

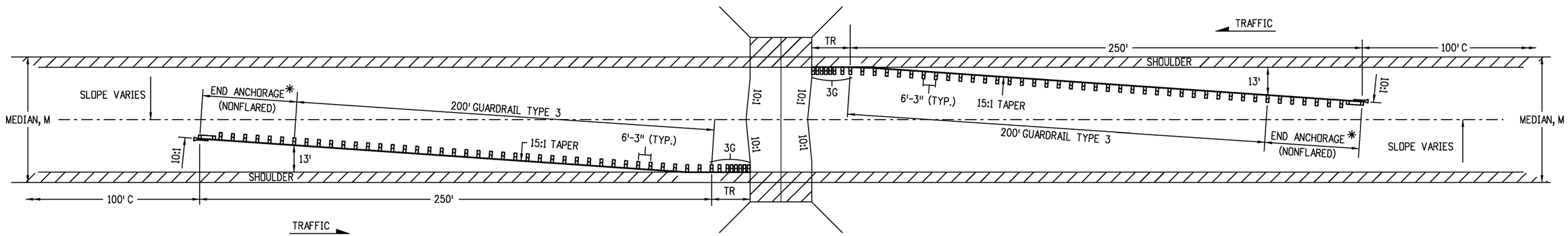

MEDIANS 60 FT. AND OVER WITH 4 to 8 FT. SHOULDERS.

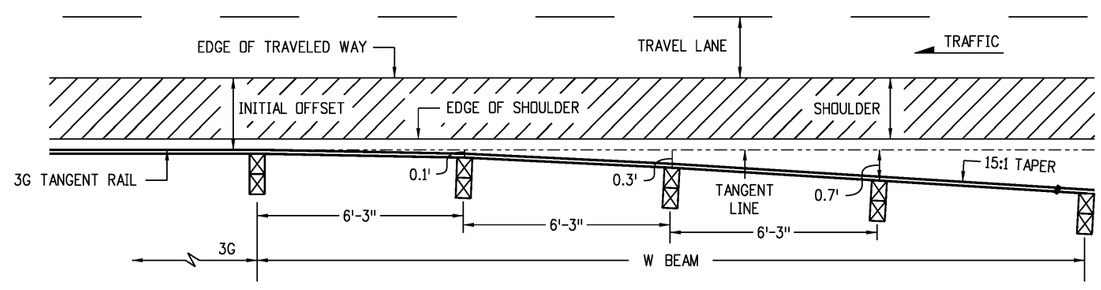

TRANSITION TO TYPICAL 15:1 TAPER

NOTES

1. GUARDRAIL TRANSITIONS FROM PARALLEL TO ROADWAY SHOULDER AT 3G SEGMENT TO 15:1 TAPER WITHIN 25 FEET BASED ON POST OFFSET DIMENSIONS SHOWN.
2. SEE SHEET 14 FOR THE RIGHT SHOULDER GUARDRAIL LAYOUT.

MULTILANE DIVIDED HIGHWAYS - (DEPRESSED MEDIANS, 60 FT. AND OVER WITH OPEN HAZARDS OR OBSTRUCTIONS)

Computer File Information		Sheet Revisions	
Creation Date: 07/31/19		Date:	Comments
Designer Initials: JBK	(R-X)		
Last Modification Date: 03/05/20	(R-X)		
Detailer Initials: LTA	(R-X)		
CAD Ver.: MicroStation V8 Scale: Not to Scale Units: English	(R-X)		

Colorado Department of Transportation
2829 West Howard Place
CDOT HQ, 3rd Floor
Denver, CO 80204
Phone: 303-757-9021 FAX: 303-757-9868
Project Development Branch JBK

MIDWEST GUARDRAIL SYSTEM (MGS) TYPE 3 W-BEAM 31 INCHES

Issued by the Project Development Branch: July 31, 2019

STANDARD PLAN NO.
M-606-1
Standard Sheet No. 15 of 19
Project Sheet Number:

NOTES

1. GUARDRAIL TRANSITIONS FROM PARALLEL TO ROADWAY SHOULDER AT 3G SEGMENT TO 15:1 TAPER WITHIN 25 FEET BASED ON POST OFFSET DIMENSIONS SHOWN.
2. THE OPTION 1 LAYOUT SHALL BE USED WHEN "Y" EXCEEDS 16 FEET OR WHEN MEDIAN BARRIER IS CONTINUOUS.
3. THE OPTION 2 LAYOUT SHALL BE USED WHEN "Y" IS 16 FEET OR LESS.
4. SEE SHEET 14 FOR RIGHT SHOULDER GUARDRAIL LAYOUT.

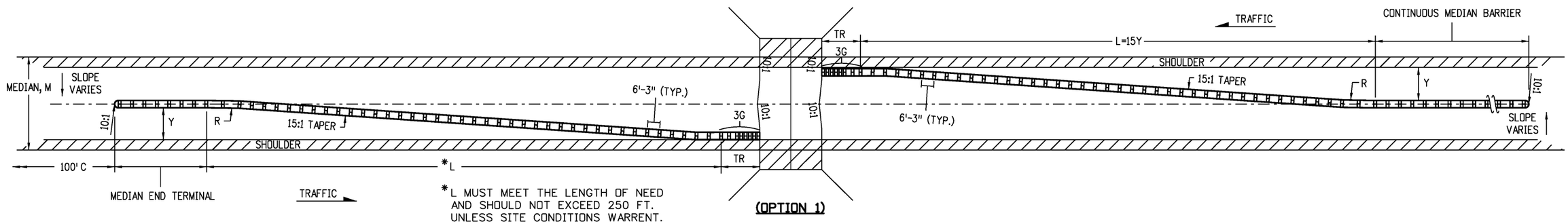

*L MUST MEET THE LENGTH OF NEED AND SHOULD NOT EXCEED 250 FT. UNLESS SITE CONDITIONS WARRENT.

(OPTION 1)

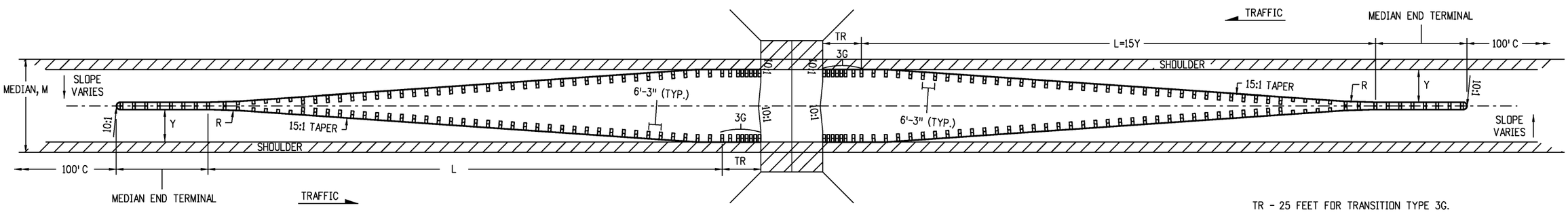

(OPTION 2)

TR - 25 FEET FOR TRANSITION TYPE 3G.
C - CHANGE: 100 FT. TRANSITION TO NORMAL SLOPE.
M - WIDTH OF MEDIAN.
L - TOTAL LENGTH PAID AS GUARDRAIL TYPE 3.
Y - FINAL OFFSET AT END.

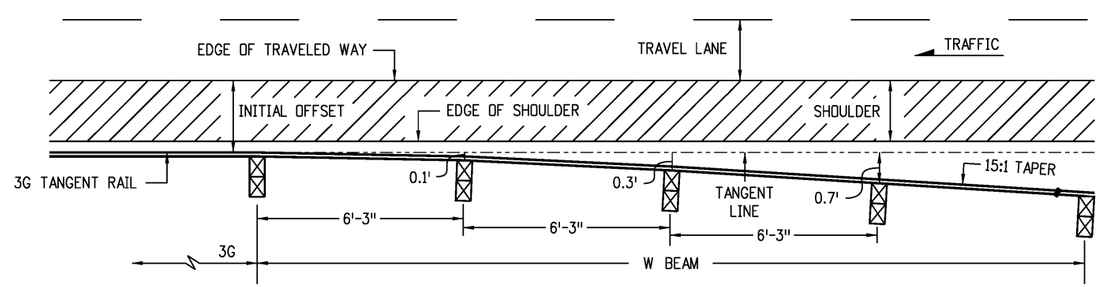

TRANSITION TO TYPICAL 15:1 TAPER

MULTILANE DIVIDED HIGHWAYS - (DEPRESSED MEDIANS, 21 - 59 FT. WITH OPEN HAZARDS OR OBSTRUCTIONS)

Computer File Information		Sheet Revisions	
Creation Date: 07/31/19		Date:	Comments
Designer Initials: JBK	(R-X)		
Last Modification Date: 03/05/20	(R-X)		
Detailer Initials: LTA	(R-X)		
CAD Ver.: MicroStation V8 Scale: Not to Scale Units: English	(R-X)		

Colorado Department of Transportation
2829 West Howard Place
CDOT HQ, 3rd Floor
Denver, CO 80204
Phone: 303-757-9021 FAX: 303-757-9868
Project Development Branch JBK

MIDWEST GUARDRAIL SYSTEM (MGS) TYPE 3 W-BEAM 31 INCHES

Issued by the Project Development Branch: July 31, 2019

STANDARD PLAN NO.
M-606-1
Standard Sheet No. 16 of 19
Project Sheet Number:

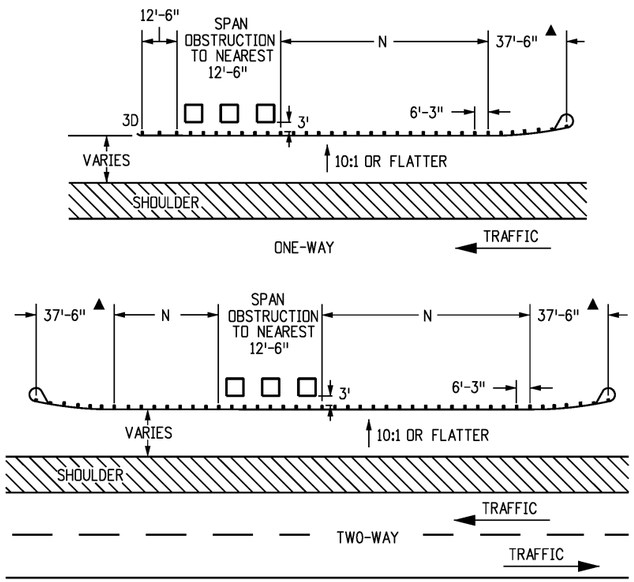

GUARDRAIL FOR ROADSIDE OBSTRUCTIONS

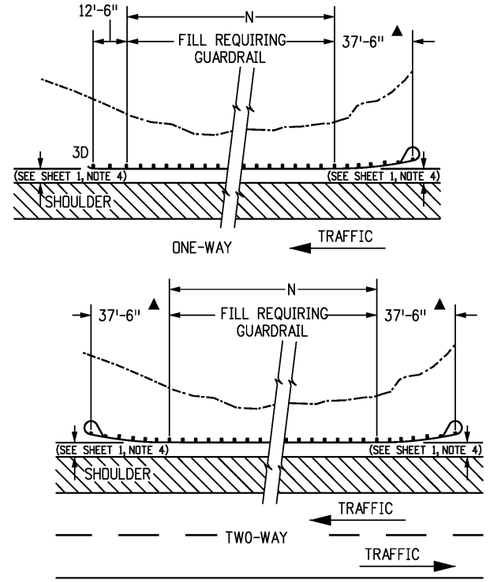

GUARDRAIL FOR ROADSIDE FILL CONSTRUCTION

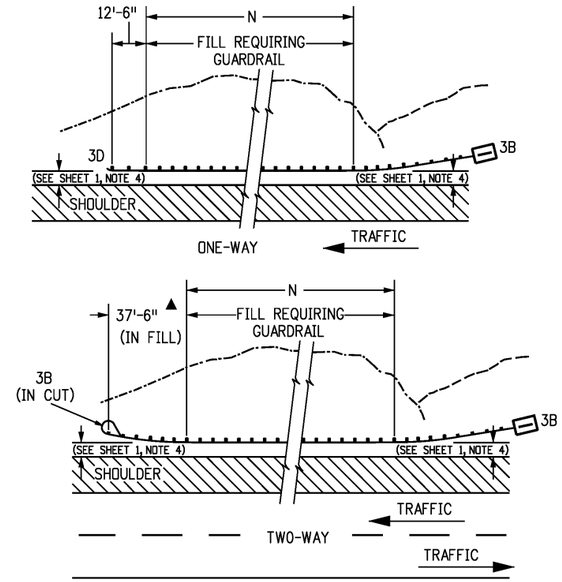

GUARDRAIL FOR ROADSIDE CUT-TO-FILL CONDITION

NOTES

1. A TYPE 3G OR 3H TRANSITION (SEE SHEET 11) SHALL BE USED TO CONNECT THE TYPE 3 W-BEAM TO A TYPE 9 CONCRETE BARRIER (SEE M-606-15) OR TO A TYPE 8 OR 10 BRIDGE RAIL.
2. "TR" SHALL BE 25 FEET FOR THE TRANSITION TYPES 3G AND 3H.
3. THE GUARDRAIL LENGTH DIMENSION "N" IS THE LENGTH AS DETERMINED BY THE LENGTH OF NEED COMPUTATION AND IS SHOWN ON THE PLANS. THE MINIMUM IS 12 FT.-6 IN. WHERE SITE CONDITIONS ALLOW. THE OVERALL REQUIRED LENGTH OF NEED CAN INCLUDE THE LENGTH OF TRANSITION, THE LENGTH OF RAIL (N), AND ANY REDIRECTIVE LENGTH IN THE RAIL END TREATMENT. A TRAVERSABLE SLOPE SHALL BE PROVIDED BEHIND THE TERMINAL TO DIMENSION "N" PRIOR TO THE OBSTRUCTION UNLESS OTHERWISE APPROVED BY THE ENGINEER.

▲ END ANCHORAGE CAN BE FLARED OR NONFLARED

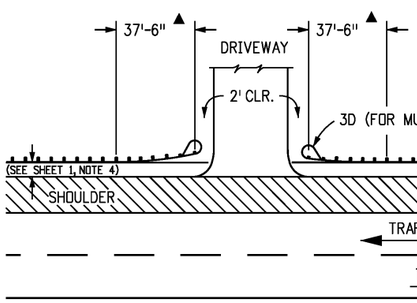

LAYOUT FOR DRIVEWAY APPROACH

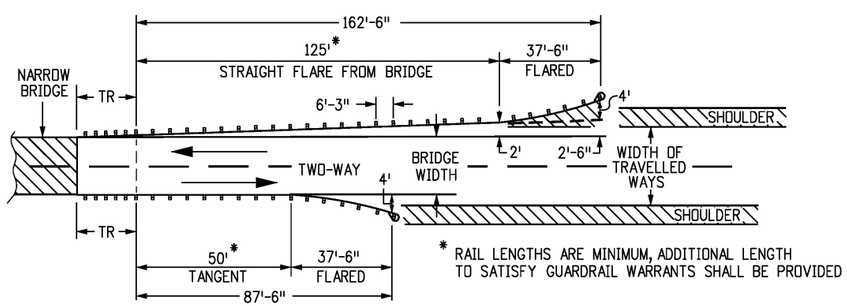

* RAIL LENGTHS ARE MINIMUM, ADDITIONAL LENGTH TO SATISFY GUARDRAIL WARRANTS SHALL BE PROVIDED

2-WAY NARROW APPLICATION

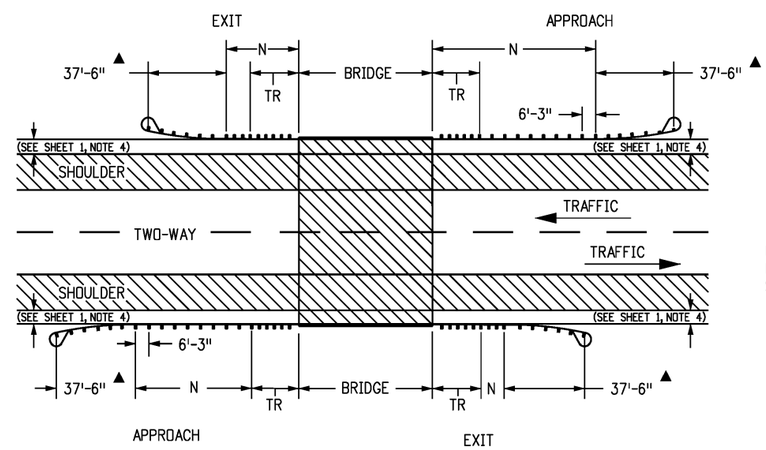

2-WAY NORMAL BRIDGE APPLICATION

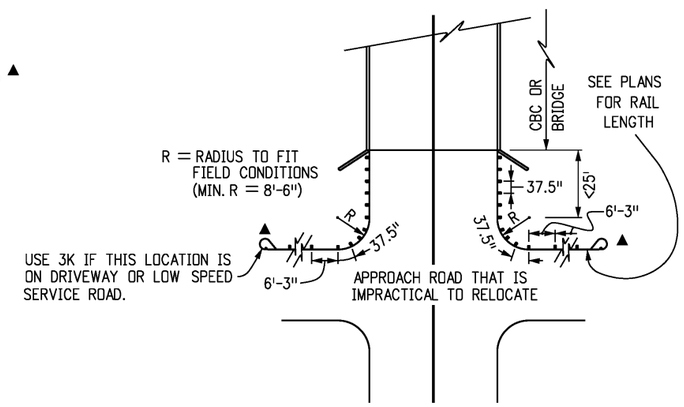

GUARDRAIL TYPE 3 WITH BLOCKED OUT POSTS SPACED AT 3'-1½" FROM STRUCTURE AROUND CURVE.

INTERRUPTED STRUCTURE APPROACH

(USE TYPE 3J ON SHEET 12 WHEN PRACTICAL)

Computer File Information		Sheet Revisions	
Creation Date: 07/31/19		Date:	Comments
Designer Initials: JBK	(R-X)		
Last Modification Date: 03/05/20	(R-X)		
Detailer Initials: LTA	(R-X)		
CAD Ver.: MicroStation V8 Scale: Not to Scale Units: English	(R-X)		

Colorado Department of Transportation
2829 West Howard Place
CDOT HQ, 3rd Floor
Denver, CO 80204
Phone: 303-757-9021 FAX: 303-757-9868
Project Development Branch JBK

MIDWEST GUARDRAIL SYSTEM (MGS) TYPE 3 W-BEAM 31 INCHES

Issued by the Project Development Branch: July 31, 2019

STANDARD PLAN NO.
M-606-1
Standard Sheet No. 17 of 19
Project Sheet Number:

NOTES

1. POSTS 1, 2, 9, and 10 MAY BE TIMBER OR STEEL.
2. THE NUMBER OF OMITTED POSTS IS DEPENDENT ON THE LENGTH OF THE GAP.
3. ONE POST MAY BE OMITTED WITHOUT ANY MODIFICATION TO THE GUARDRAIL RUN.

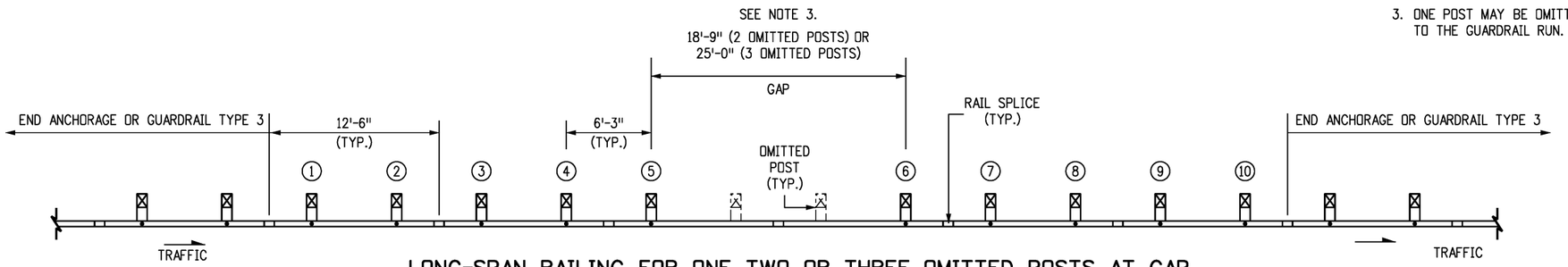

LONG-SPAN RAILING FOR ONE, TWO, OR THREE OMITTED POSTS AT GAP

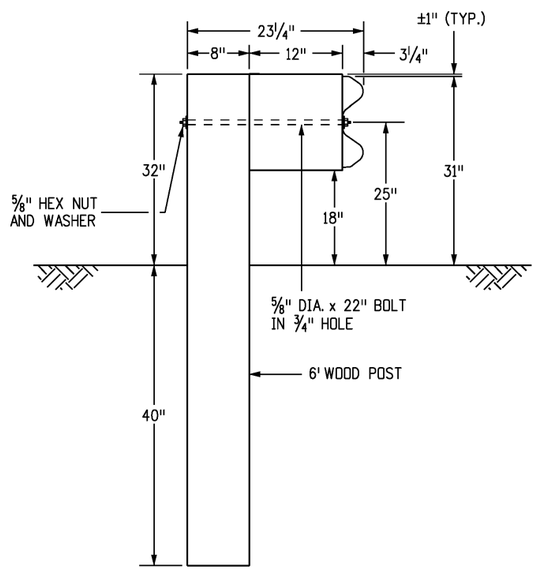

TIMBER POST

POSTS 1-2 AND 9-10
(SEE NOTE 1)

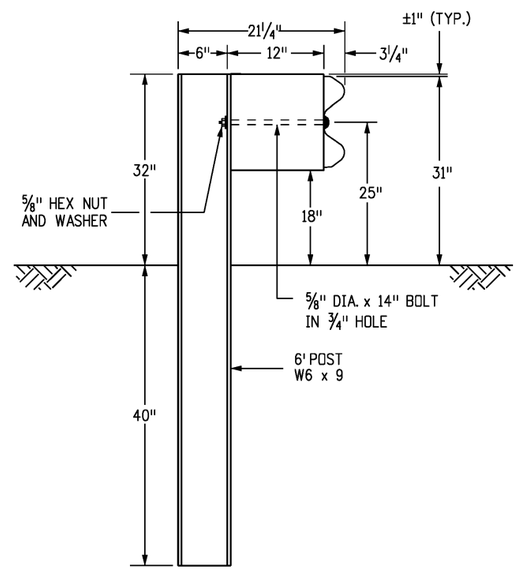

STEEL POST

POSTS 1-2 AND 9-10
(SEE NOTE 1)

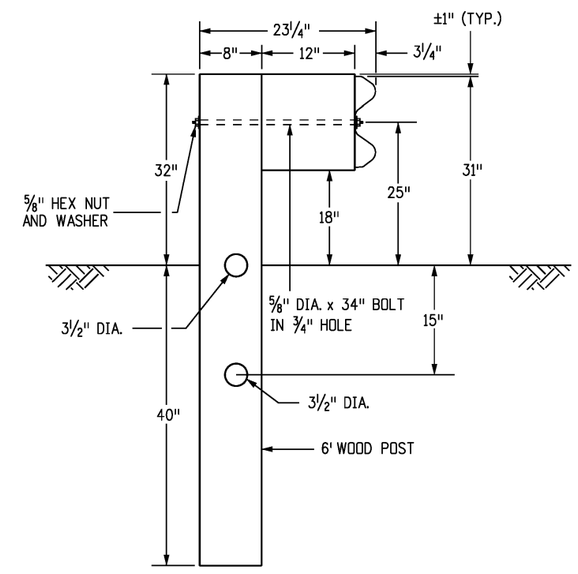

BREAKWAY TIMBER POST

POSTS 3 - 8

Computer File Information		Sheet Revisions	
Creation Date: 07/31/19		Date:	Comments
Designer Initials: JBK	R-X		
Last Modification Date: 03/05/20	R-X		
Detailer Initials: LTA	R-X		
CAD Ver.: MicroStation V8 Scale: Not to Scale Units: English	R-X		

Colorado Department of Transportation
2829 West Howard Place
CDOT HQ, 3rd Floor
Denver, CO 80204
Phone: 303-757-9021 FAX: 303-757-9868
Project Development Branch JBK

MIDWEST
GUARDRAIL SYSTEM (MGS)
TYPE 3 W-BEAM 31 INCHES

Issued by the Project Development Branch: July 31, 2019

STANDARD PLAN NO.
M-606-1
Standard Sheet No. 18 of 19
Project Sheet Number:

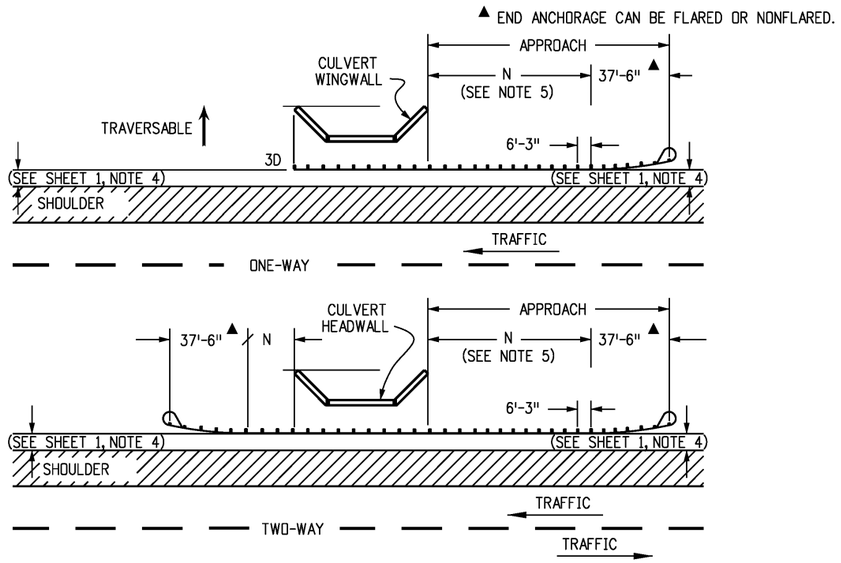

GUARDRAIL FOR CULVERTS

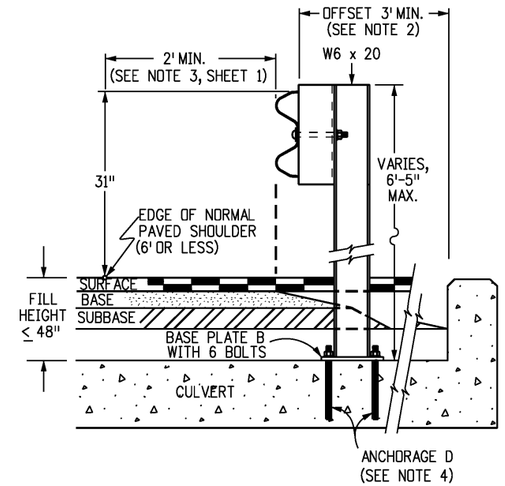

INSIDE MOUNT ON CBC

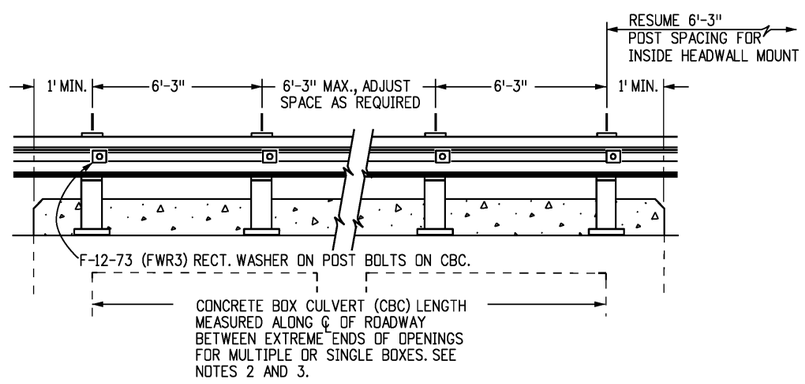

RAIL PLACEMENT FOR INSIDE MOUNT

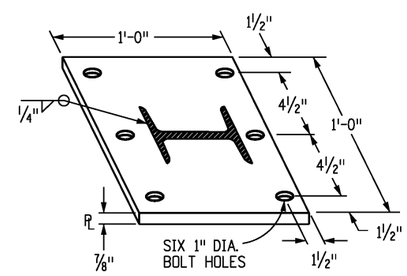

BASE PLATE B

(FOR INSIDE MOUNT)

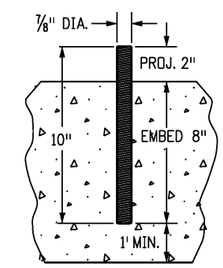

ANCHORAGE D

(FOR INSIDE MOUNT)

NOTES

1. LOCATION AND LENGTH OF MEDIAN GUARDRAIL APPROACHES TO CULVERTS WITH FULL HEADWALL AND WINGWALLS SHALL BE AS SHOWN FOR BRIDGES ON SHEET 15. THE GUARDRAIL TYPE 3 SHALL CONTINUE ACROSS THE CULVERT AS SHOWN ON THIS SHEET.

2. RIGHT SHOULDER BOX CULVERT TREATMENT IS SHOWN ON THIS SHEET FOR CULVERTS 20 FT. OR LESS IN LENGTH.

3. CONSTRUCTION AND PAYMENT FOR FILL HEIGHTS SHALL BE INCLUDED IN THE COST OF THE GUARDRAIL TYPE 3.

4. ANCHORAGE D: SIX BOLTS FOR BASE PLATE "B" WITH INSIDE MOUNT. THE BOLTS SHALL BE 7/8 IN. DIA X 10 IN. HIGH STRENGTH RODS THREADED FULL LENGTH AND ALL GALVANIZED. RODS SHALL BE CAST-IN-PLACE FOR NEW STRUCTURES. FOR EXISTING STRUCTURES, THE RODS SHALL BE INSTALLED IN 1-1/4 IN. DIA HOLES WITH NON-SHRINK GROUT OR EPOXY CONFORMING TO ASTM C 881. IF THE THICKNESS OF A CULVERT'S TOP PANEL REQUIRES BOLTS TO BE LESS THAN 10 IN. HIGH, THE BOLTS SHALL BE APPROVED BY THE ENGINEER.

5. THE GUARDRAIL LENGTH DIMENSION "N" IS THE LENGTH AS DETERMINED BY THE LENGTH OF NEED COMPUTATION AND IS SHOWN ON THE PLANS. THE MINIMUM IS 12 FT.-6 IN. WHERE SITE CONDITIONS ALLOW. THE OVERALL REQUIRED LENGTH OF NEED CAN INCLUDE THE LENGTH OF TRANSITION, THE LENGTH OF RAIL (N), AND ANY REDIRECTIVE LENGTH IN THE RAIL END TREATMENT.

6. ALL POSTS, BASE PLATES, AND ANCHOR BOLTS SHALL BE FABRICATED FROM ASTM A 36 STEEL. THE ABOVE MATERIAL, W-BEAM, AND ALL ANCHOR BOLTS AND MISCELLANEOUS BOLTS, NUTS, AND WASHERS SHALL BE GALVANIZED AFTER FABRICATION INACCORDANCE WITH SECTION 509. CONCRETE, REINFORCING STEEL, AND STRUCTURAL STEEL ELEMENTS SHALL BE IN ACCORDANCE WITH SECTIONS 601, 602, AND 509, RESPECTIVELY.

7. POST ANCHORS, ENCASED IN CONCRETE, SHALL BE ASTM A 36 STEEL, AND NEED NOT BE GALVANIZED.

8. PRIOR TO INSTALLATION OF GUARDRAIL ON CULVERTS, THREE SETS OF WORKING DRAWINGS WHICH COMPLY WITH THE REQUIREMENTS OF SECTION 105 SHALL BE SUBMITTED TO THE ENGINEER FOR INFORMATION ONLY.

Computer File Information		Sheet Revisions	
Creation Date: 07/31/19		Date:	Comments
Designer Initials: JBK	(R-X)		
Last Modification Date: 03/05/20	(R-X)		
Detailer Initials: LTA	(R-X)		
CAD Ver.: MicroStation V8 Scale: Not to Scale Units: English	(R-X)		

Colorado Department of Transportation
2829 West Howard Place
CDOT HQ, 3rd Floor
Denver, CO 80204
Phone: 303-757-9021 FAX: 303-757-9868
Project Development Branch JBK

MIDWEST GUARDRAIL SYSTEM (MGS) TYPE 3 W-BEAM 31 INCHES

Issued by the Project Development Branch: July 31, 2019

STANDARD PLAN NO.
M-606-1
Standard Sheet No. 19 of 19
Project Sheet Number:

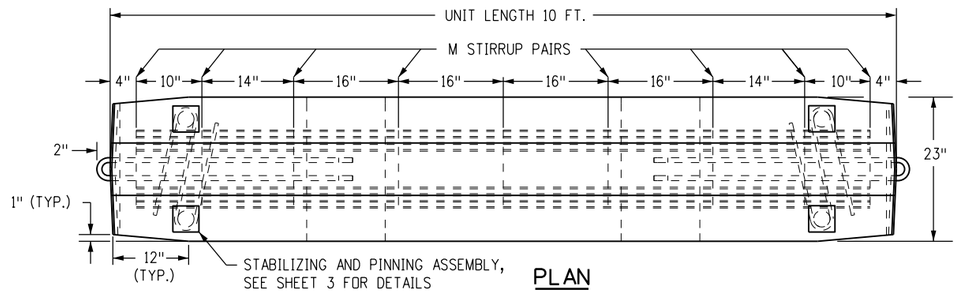

PLAN

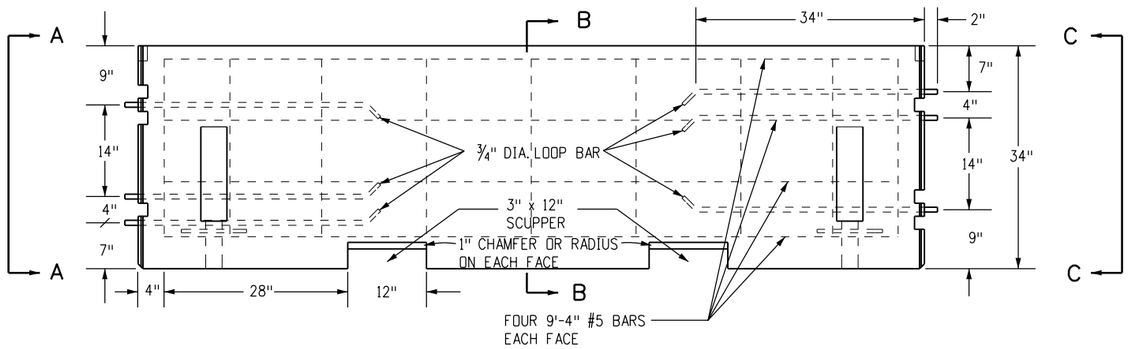

ELEVATION

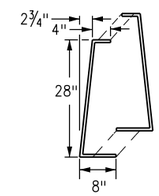

STIRRUP "M" #5 REBAR PAIR

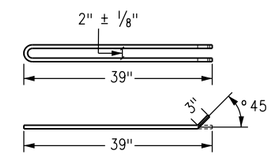

LOOP BAR BENDING DETAIL (ASTM A36)

(HOT-DIP GALVANIZED AFTER FABRICATION)

GENERAL NOTES

1. PRECAST TYPE 7 CONCRETE BARRIER HAS BEEN CLASSIFIED AS TL-3 MASH COMPLIANT. MANUFACTURING AND UTILIZATION OF PRECAST TYPE 7 CONCRETE BARRIER IS PERMITTED FOR ALL CDOT PROJECTS REQUIRING TL-3 MASH COMPLIANT TEMPORARY CONCRETE BARRIER. REFER TO CDOT'S APPROVED PRODUCT LIST (APL) FOR ADDITIONAL MASH COMPLIANT PROPRIETARY TEMPORARY BARRIER DEVICES. ALL PROPRIETARY PRODUCTS SHALL BE INSTALLED CONFORMING TO THE MANUFACTURER'S RECOMMENDATIONS. GUIDANCE FROM STANDARD M-606-14 IS NOT APPLICABLE.
2. ALL STEEL REINFORCING SHALL BE 2 INCHES CLEAR OF THE NEAREST SURFACE OF CONCRETE, UNLESS OTHERWISE SHOWN. REINFORCING STEEL SHALL BE GRADE 60 MINIMUM.
3. CONCRETE SHALL BE CLASS D.
4. FOR TEMPORARY INSTALLATIONS, INSTALL WITH A 4 FT. MINIMUM DISTANCE FROM THE CENTERLINE OF THE PRECAST TYPE 7 CONCRETE BARRIER TO ANY OBSTRUCTIONS BEHIND IT. FOR TEMPORARY INSTALLATIONS WITH LESS THAN A 4 FT. MINIMUM DISTANCE, STABILIZATION PINS SHALL BE USED ON EACH PRECAST TYPE 7 CONCRETE BARRIER UNIT ADJACENT TO, AND WITHIN 10 FT. OF BOTH SIDES OF THE OBSTRUCTION. SEE SHEET 3 FOR STABILIZATION PINNING DETAILS.
5. THE FLARE RATE FOR TEMPORARY INSTALLATIONS SHALL BE 10:1 OR FLATTER, UNLESS OTHERWISE APPROVED BY THE ENGINEER.
6. STABILIZATION PINS SHALL BE USED TO ANCHOR EACH 10 FT. UNIT IN ALL INSTALLATIONS. SEE SHEET 3 FOR STABILIZATION PINNING DETAILS.
7. THE MONTH AND YEAR THE PRECAST TYPE 7 CONCRETE BARRIER WAS MANUFACTURED SHALL BE MOLDED INTO ONE END OF EACH 10 FT. BARRIER UNIT.
8. APPROVED NON-SHRINK GROUT SHALL BE USED FOR GROUTING OVER ALL PINS AND GROUTING OF SCUPPERS.
9. WHEN HYDRAULIC ANALYSIS ALLOWS, SCUPPERS MAY NOT BE NEEDED ON:
   A. MEDIAN INSTALLATION WITH INLET DRAINAGE.
   B. PRECAST TYPE 7 CONCRETE SHOULDER BARRIER ON HIGH EDGE OF A SUPERELEVATED SHOULDER.
   C. PRECAST TYPE 7 CONCRETE MEDIAN BARRIER ON A CREST VERTICAL CURVE.
10. ALL INCIDENTAL WORK AND MATERIALS SUCH AS CONNECTING PINS, ANCHORS BOLTS, GROUT, AND INSTALLATION FOR END ANCHORAGE WILL NOT BE PAID FOR SEPARATELY, BUT SHALL BE INCLUDED IN THE COST OF THE WORK.
11. ONE INCH DIAMETER THREADED INSERTS MAY BE CAST-IN-PLACE TO FACILITATE LIFTING FOR THE TEMPORARY PRECAST TYPE 7 CONCRETE BARRIER APPLICATIONS ONLY.
12. RETROREFLECTORIZATION IS REQUIRED ON PRECAST TYPE 7 CONCRETE BARRIERS. SEE CONCRETE BARRIER RETROREFLECTOR NOTES ON STANDARD PLAN S-612-1, SHEETS 4 THROUGH 6.

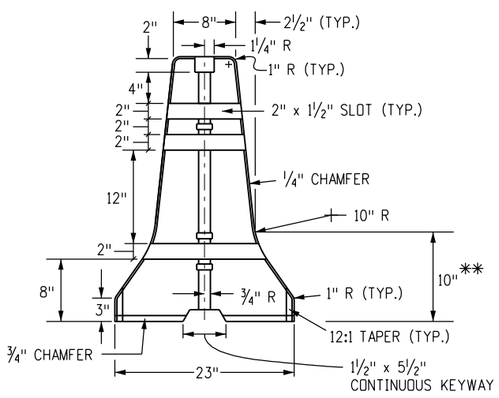

SECTION A-A

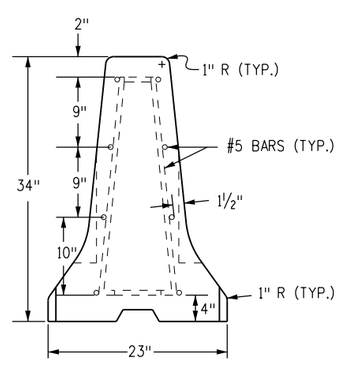

SECTION B-B

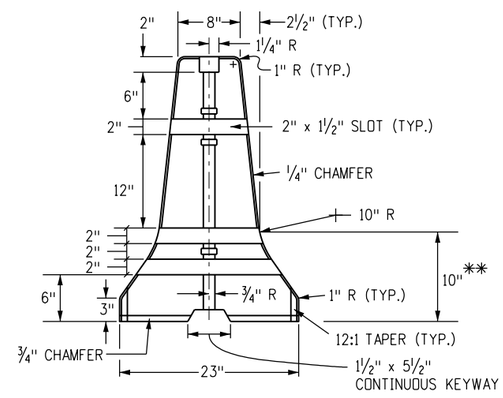

SECTION C-C

** DIMENSIONS MARKED ARE TO THE INTERSECTION POINT OF THE BARRIER SLOPES. CONSTRUCT THE 10 IN. RADIUS TO PROVIDE A SMOOTH TRANSITION BETWEEN THE SLOPES.

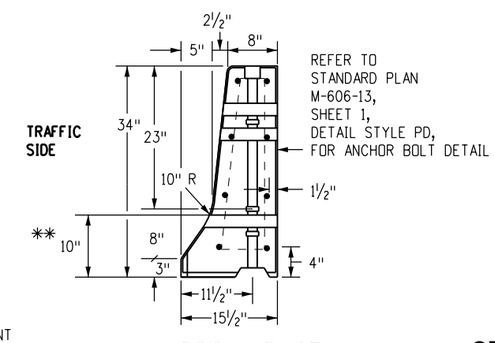

NARROW BASE SHOULDER BARRIER

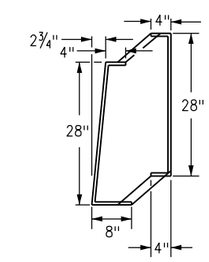

NARROW BASE STIRRUP "M" #5 REBAR PAIR

Computer File Information		Sheet Revisions	
Creation Date: 07/31/19		Date:	Comments
Designer Initials: JBK	R-X	08/21/20	Added Gen. Note 1 to show these barriers are TL-3 MASH compliant.
Last Modification Date: 02/09/23	R-X	02/09/23	Changed reinforcing steel grade to 60 min. Deleted references to this being permanent.
Detailer Initials: LTA	R-X		
CAD Ver.: MicroStation V8 Scale: Not to Scale Units: English	R-X		

Colorado Department of Transportation
2829 West Howard Place
CDOT HQ, 3rd Floor
Denver, CO 80204
Phone: 303-757-9021 FAX: 303-757-9868
Construction Engineering Services JBK

PRECAST TYPE 7 CONCRETE BARRIER

Issued by the Project Development Branch: July 31, 2019

STANDARD PLAN NO.
M-606-14
Standard Sheet No. 1 of 4
Project Sheet Number:

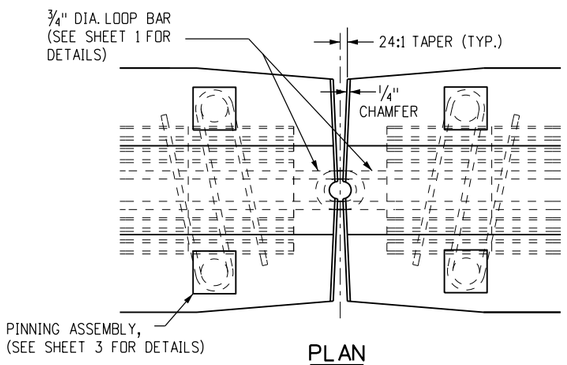

PLAN

SHOWN PRIOR TO PIN INSTALLATION.

FOR DETAILS NOT SHOWN,
SEE SECTION VIEWS A-A, B-B AND C-C
ON SHEET 1.

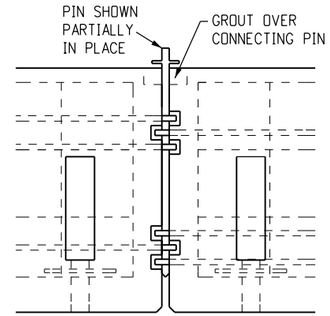

ELEVATION

FOR DETAILS NOT SHOWN,
SEE SECTION VIEWS A-A, B-B, AND C-C
ON SHEET 1

NOTES

1. WASHERS SHALL BE FORGED AS AN INTEGRAL PART OF THE PIN OR SHALL BE WELDED AS SHOWN.
2. PINS SHALL BE HOT-DIPPED GALVANIZED AFTER FABRICATION.
3. IF AN ALTERNATIVE TOP CONFIGURATION IS USED FOR LIFTING, THE LIFTING PIN SHALL BE PROVIDED. PINS SHALL CONFORM TO CRITICAL DIMENSIONS (PIN LENGTH DIAMETER).
4. PINS SHALL CONFORM TO ASTM A449.
5. APPROVED NON-SHRINK GROUT SHALL BE USED FOR GROUTING OVER ALL PINS, AND GROUTING OF SCUPPERS.
6. BOTH ENDS OF THE TYPE 7 CONCRETE BARRIER SHALL HAVE A 24:1 TAPER IN EACH DIRECTION FROM THE CENTER PIN RECESS TO IT'S OUTER EDGE TO FACILITATE PLACEMENT ON CURVES.

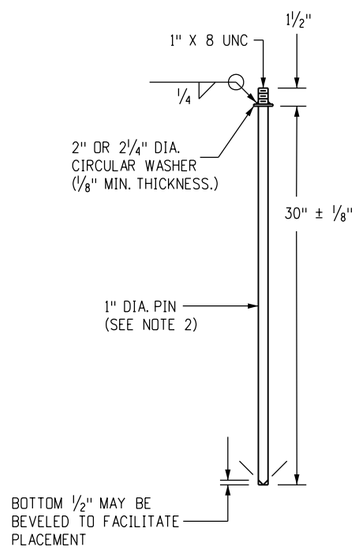

CONNECTING PIN DETAIL

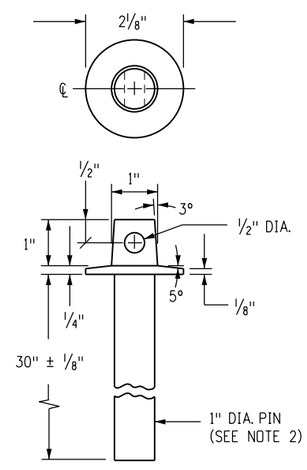

ALTERNATIVE PIN DETAIL

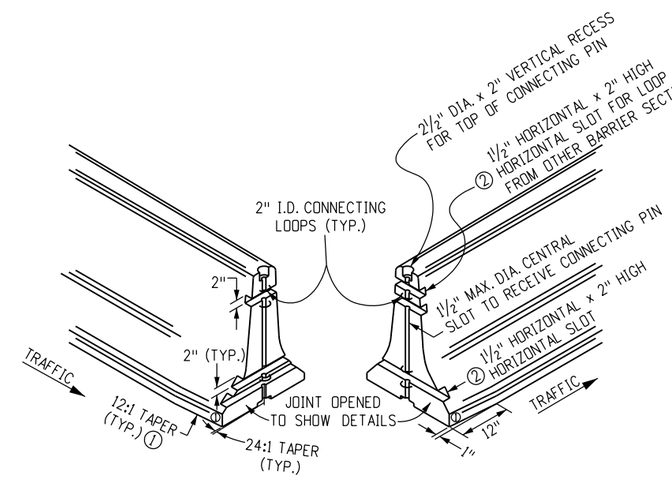

JOINT STYLE

① A 1 INCH BY 12 INCH TAPER IS REQUIRED AT THE BOTTOM OF ALL FOUR CORNERS OF THE PRECAST TYPE 7 CONCRETE BARRIER SECTIONS TO ELIMINATE SNAGGING OF SNOW PLOW BLADES.

② THE HORIZONTAL SLOTS SHALL BE 1½ INCH IN DEPTH AT THE CENTER OF THE PRECAST TYPE 7 CONCRETE BARRIER AND MAY DECREASE IN DEPTH AT THE EDGE OF THE BARRIER UNIT DUE TO THE (24:1) TAPER.

DETAILS FOR PIN AND LOOP CONNECTION

Computer File Information		Sheet Revisions	
Creation Date: 07/31/19		Date:	Comments
Designer Initials: JBK	(R-X)	08/21/20	Added Gen. Note 1 to show these barriers are TL-3 MASH compliant.
Last Modification Date: 02/09/23	(R-X)	02/09/23	Changed reinforcing steel grade to 60 min. Deleted references to this being permanent.
Detailer Initials: LTA	(R-X)		
CAD Ver.: MicroStation V8 Scale: Not to Scale Units: English	(R-X)		

Colorado Department of Transportation
2829 West Howard Place
CDOT HQ, 3rd Floor
Denver, CO 80204
Phone: 303-757-9021 FAX: 303-757-9868
Construction Engineering Services JBK

PRECAST TYPE 7 CONCRETE BARRIER

Issued by the Project Development Branch: July 31, 2019

STANDARD PLAN NO.
M-606-14
Standard Sheet No. 2 of 4
Project Sheet Number:

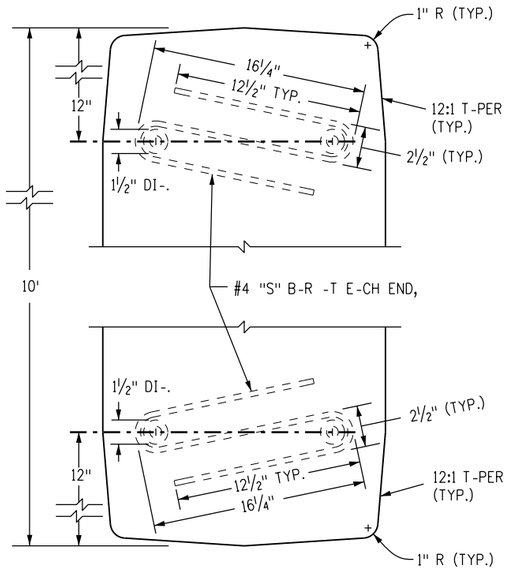

PL-N VIEW OF S B-R ENDS

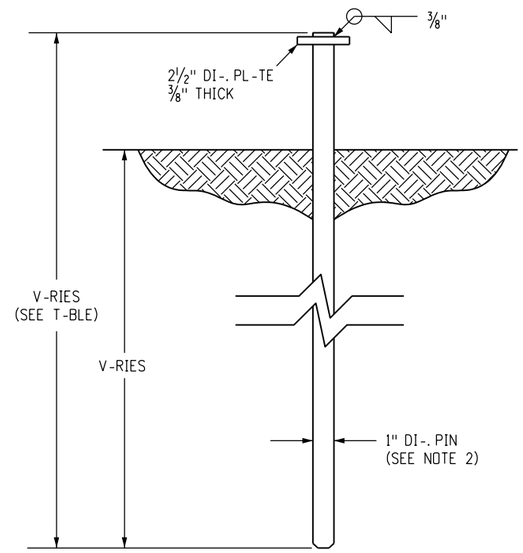

ST-BILIZ-TION PIN

(-STM - 36 STEEL)

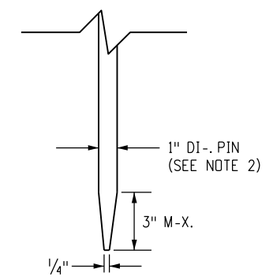

OPTION-L T-PERED END PIN

(SEE NOTE 3)

NOTES

1. SEE SHEET 1 FOR REINFORCEMENT -ND OTHER DET-ILS NOT SHOWN HERE.
2. PINS SH-LL BE HOT-DIPPED G-LV-NIZED -FTER F-BRIC-TION
3. -N OPTION-L 3 INCHES M-XIMUM T-PERED END POINT M-Y BE PROVIDED ON THE ST-BILIZ-TION PIN TO F-CILIT-TE DRIVING.

RO-D SURF-CE	PIN LENGTH
CONCRETE	2 FT.-6 IN.
HM-	3 FT.
SOIL	3 FT.-6 IN.

T-BLE OF ST-BILIZ-TION PIN LENGTHS

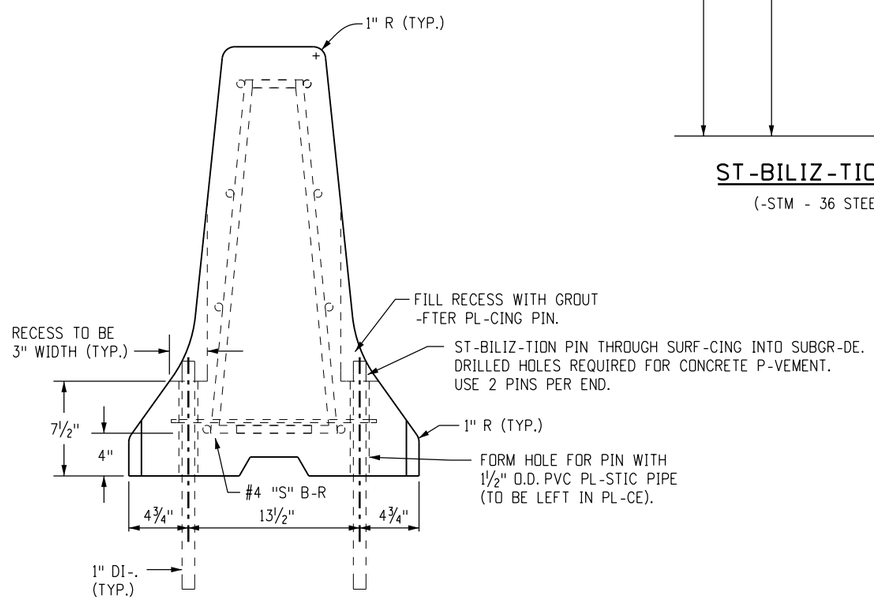

ELEV-TION VIEW WITH PINS

DETAILS FOR STABILIZATION OF TEMPORARY PINNED PRECAST TYPE 7 CONCRETE BARRIER

Computer File Information		Sheet Revisions	
Creation Date: 07/31/19		Date:	Comments
Designer Initials: JBK	R-X	08/21/20	-dded Gen. Note 1 to show these barriers are TL-3 M-SH compliant.
Last Modification Date: 02/09/23	R-X	02/09/23	Changed reinforcing steel grade to 60 min. Deleted references to this being permanent.
Detailer Initials: LTA	R-X		
C-D Ver.: MicroStation V8 Scale: Not to Scale Units: English	R-X		

Colorado Department of Transportation
2829 West Howard Place
CDOT HQ, 3rd Floor
Denver, CO 80204
Phone: 303-757-9021 FAX: 303-757-9868
Construction Engineering Services JBK

PRECAST TYPE 7 CONCRETE BARRIER

Issued by the Project Development Branch: July 31, 2019

STANDARD PLAN NO.
M-606-14
Standard Sheet No. 3 of 4
Project Sheet Number:

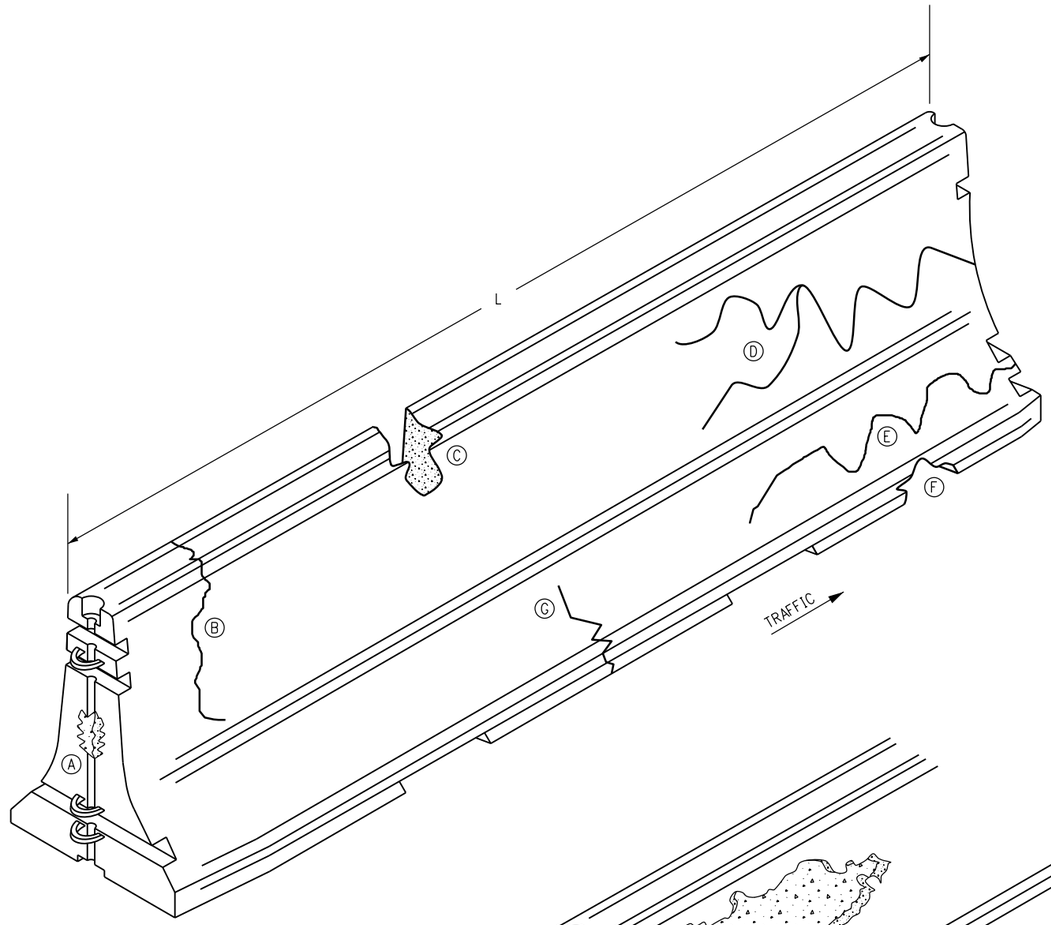

ISOMETRIC VIEW (TYP.)

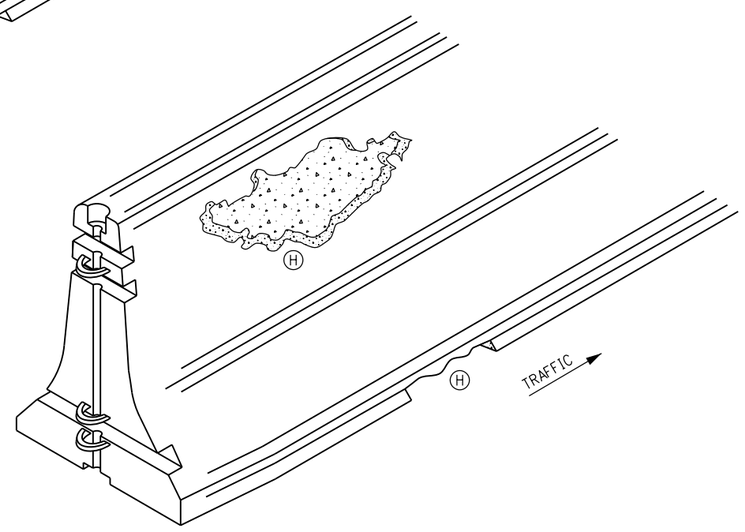

NOTES

1. PRECAST TYPE 7 CONCRETE BARRIERS SHALL BE USED ONLY IN TEMPORARY CONFIGURATIONS AND MUST BE INSPECTED PRIOR TO REUSE AND PLACEMENT IN WORK ZONES. CONTINUED USE IN WORK ZONES IS ALSO SUBJECT TO PERIODIC INSPECTIONS. INSPECTIONS AND MEASUREMENTS WILL BE PERFORMED BY CDOT. ANY PRECAST TYPE 7 CONCRETE BARRIER SHOWING ANY ONE OF THE FOLLOWING DISCREPANCIES WILL NOT BE INSTALLED OR ALLOWED TO REMAIN IN USE:

   (A) A SLOT CONNECTION WHERE MORE THAN 25% IS EITHER CRACKED OR MISSING.

   (B) A CRACK ON TOP OF A BARRIER UNIT WHICH RUNS DOWN THE VERTICAL FACE ON EITHER SIDE FOR MORE THAN 16 INCHES.

   (C) A CHIP ON THE TOP OR VERTICAL FACE WHICH IS MORE THAN 1 SQ. FT. IN AREA AND MORE THAN 2 INCHES DEEP. SMALLER AREAS AND DEPTHS SHALL BE FIELD PATCHED. CHIPS LESS THAN 2 INCHES DEEP AND WITHIN A REASONABLE AREA SHALL NOT REQUIRE ATTENTION.

   (D) A HORIZONTAL CRACK ON EITHER SIDE WHICH IS GREATER THAN L/2, OR THAT SPLITS INTO A "Y" SHAPE WITH ARMS GREATER THAN 12 INCHES.

   (E) A HORIZONTAL CRACK IN THE SLOPING AREA THAT IS GREATER THAN L/2 AND INTERSECTS A VERTICAL CRACK.

   (F) A CHIP ON A VERTICAL CURB GREATER THAN 1 SQ. FT. AND/OR 3 INCHES DEEP. SMALLER AREAS AND DEPTHS SHALL BE FIELD PATCHED. CHIPS LESS THAN 1 INCH DEEP AND WITHIN A REASONABLE AREA SHALL NOT REQUIRE ATTENTION.

   (G) A VERTICAL CRACK ACROSS THE BOTTOM AND UP THE CURB FACE INTO THE SLOPING FACE.

   (H) SPALLING CONCRETE THAT IS PITTED, FLAKED, OR BROKEN OFF MORE THAN 5 SQUARE FEET COMBINED (EXPOSED REBAR MAY OR MAY NOT BE VISIBLE).

   (I) ANY CORNERS THAT ARE CHIPPED MORE THAN 1 SQ. FT. IN AREA AND MORE THAN 2 INCHES DEEP. SMALLER AREAS AND DEPTHS SHALL BE FIELD PATCHED. CHIPS LESS THAN 2 INCHES DEEP AND WITHIN A REASONABLE AREA SHALL NOT REQUIRE ATTENTION.

2. A "CRACK" IS DEFINED AS AN OPENING OF AT LEAST 1/8 INCH IN WIDTH WHEN MEASURED WITH A FEELER GAUGE.

3. ALL PRECAST TYPE 7 CONCRETE BARRIERS SHALL BE IN ACCORDANCE WITH SUBSECTION 606.04(b).

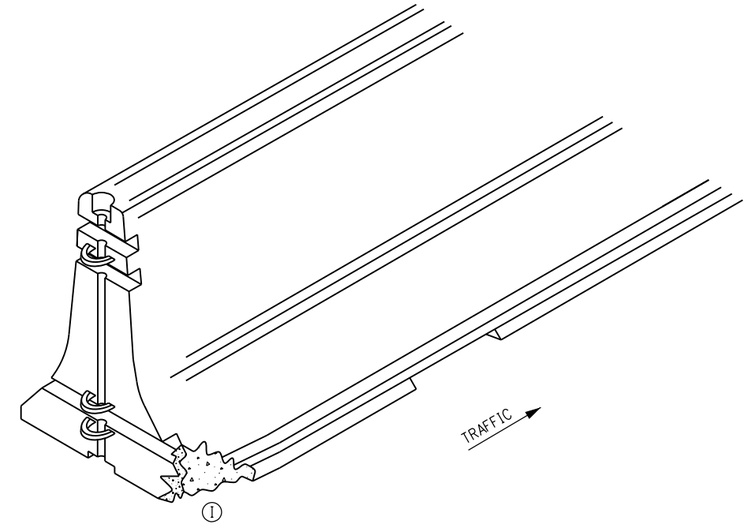

NON-REUSE OF PRECAST TYPE 7 CONCRETE BARRIER

Computer File Information		Sheet Revisions	
Creation Date: 07/31/19		Date:	Comments
Designer Initials: JBK	R-X	08/21/20	Added Gen. Note 1 to show these barriers are TL-3 MASH compliant.
Last Modification Date: 02/09/23	R-X	02/09/23	Changed reinforcing steel grade to 60 min. Deleted references to this being permanent.
Detailer Initials: LTA	R-X		
CAD Ver.: MicroStation V8 Scale: Not to Scale Units: English	R-X		

Colorado Department of Transportation
2829 West Howard Place
CDOT HQ, 3rd Floor
Denver, CO 80204
Phone: 303-757-9021 FAX: 303-757-9868
Construction Engineering Services JBK

PRECAST TYPE 7 CONCRETE BARRIER

Issued by the Project Development Branch: July 31, 2019

STANDARD PLAN NO.
M-606-14
Standard Sheet No. 4 of 4
Project Sheet Number:

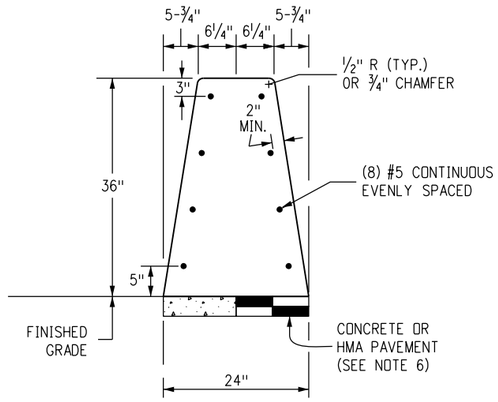

CONCRETE BARRIER STYLE CA

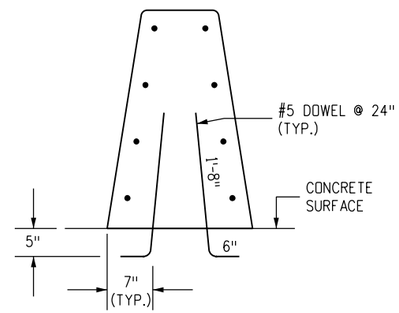

CONCRETE BARRIER STYLE CC

DETAILS SIMILAR TO STYLE CA EXCEPT AS NOTED.
BARRIER DOWELLED TO CONCRETE SURFACES.

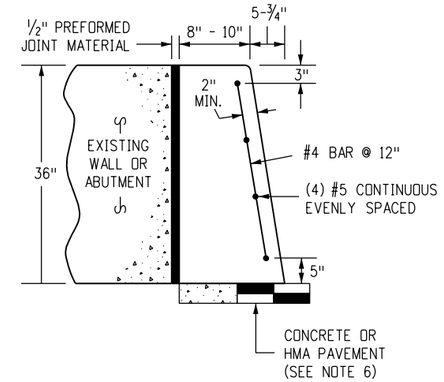

CONCRETE BARRIER STYLE CD

BARRIER AGAINST WALLS.

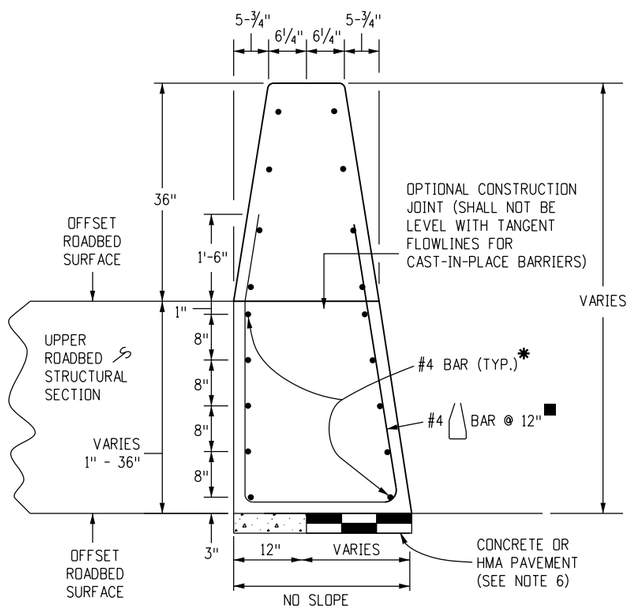

CONCRETE BARRIER STYLE CE

DETAILS SIMILAR TO STYLE CA EXCEPT AS NOTED.
USE CONCRETE BARRIER END ANCHOR WHEN NECESSARY.
SHOWN 36 INCH ROADBED SURFACES OFFSET.

* FOR SURFACES OFFSETS LESS THAN OR EQUAL TO 3 INCHES, NO ADDITIONAL REINFORCEMENT IS REQUIRED.

SURFACE OFFSETS GREATER THAN 3 INCHES WILL REQUIRE ADDITIONAL REINFORCEMENT AS SHOWN.

THE LOWEST LAYER OF TWO #4 SHALL BE 3 INCHES ABOVE THE BOTTOM OF THE BARRIER. EACH VERTICAL INCREMENT OF 8 INCHES MEASURED FROM THE LOWEST LAYER OF REINFORCEMENT SHALL INCLUDE AN ADDITIONAL TWO #4.

FOR BARRIER TRANSISTIONING IN HEIGHT MAINTAIN THE BOTTOM REINFORCEMENT LAYER COVER AND DISCONTINUE/ADD INCREMENTAL REINFORCING PARALLEL TO THE BARRIER AS HEIGHT REQUIRES.

■ REINFORCING STIRRUP NOT REQUIRED FOR ROADBED OFFSETS LESS THAN 1 FOOT.

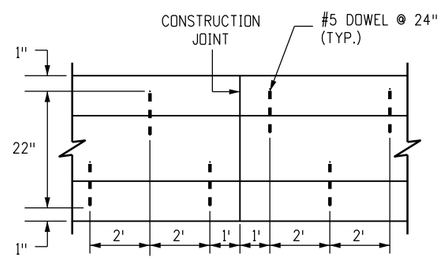

FOR STYLE CC BARRIER.
PLAN VIEW

DOWEL PLACEMENT LAYOUT

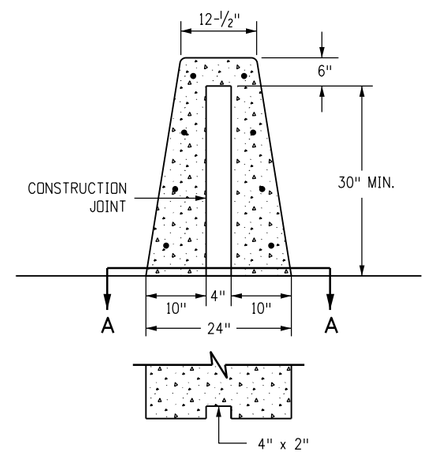

SECTION A-A
CONSTRUCTION JOINT

SEE NOTE 15.

GENERAL NOTES

1. SEE SHEET 2 FOR DETAILS OF CONCRETE BARRIER STYLE CA END ANCHOR CONNECTIONS TO STRUCTURES OR TRANSITION TO GUARDRAIL TYPE 7.
2. SEE SHEET 6 FOR CONCRETE BARRIER STYLE CA TRANSITIONS AT BRIDGE COLUMNS AND SIGN PEDESTALS IN MEDIANS.
3. WHERE GLARE SCREENS ARE REQUIRED, USE CONCRETE BARRIER STYLE CG ON SHEET 4.
4. WHERE ROADBED OFFSET IS GREATER THAN 1½ INCH, SEE CONCRETE BARRIER STYLE CE
5. BARRIER MAY BE CAST-IN-PLACE OR SLIP FORMED.
6. BARRIER FOUNDATION SHALL BE PAVEMENT, OR COMPACTED AGGREGATE BASE, OR COMPACTED EMBANKMENT MATERIAL.
7. NO ANCHORAGE IS REQUIRED (TYP.) EXCEPT FOR THE 10 FOOT ANCHORAGE. SEE SHEETS 2 AND 3 FOR DETAILS.
8. CONSTRUCTION JOINTS SHALL BE USED ON ALL BARRIER TYPES SHOWN, AT THE END OF THE DAY'S POUR OR AFTER ANY INTERRUPTION LONGER THAN 30 MINUTES. ALL CONSTRUCTION JOINTS SHALL BE THOROUGHLY CLEANED BEFORE FRESH CONCRETE IS POURED.
9. ALL REINFORCING STEEL SHALL BE GRADE 60 EPOXY COATED DEFORMED BARS AND SHALL BE A MINIMUM OF 2 INCHES IN FROM THE NEAREST CONCRETE SURFACE, UNLESS OTHERWISE NOTED.
10. CONTINUOUS LONGITUDINAL REINFORCEMENT SHALL BE EITHER GRADE 60 EPOXY COATED DEFORMED BARS OR WIRE STRAND WITH MINIMUM ULTIMATE TENSILE STRENGTH OF 28,000 LBS. AND CLASS C GALVANIZING ACCORDING TO ASTM A 603.
11. TRANSITION TO EXISTING CONCRETE BARRIER INSTALLATIONS OF DISSIMILAR SHAPE SHALL BE ACCOMPLISHED IN ONE 15 FOOT LONG SEGMENT OF BARRIER.
12. CONCRETE SHALL BE CLASS D.
13. ADDITIONAL MATERIAL FOR BARRIER EMBEDMENT GREATER THAN 1 INCH WILL NOT BE MEASURED AND PAID FOR SEPARATELY BUT SHALL BE INCLUDED IN THE WORK.
14. EPOXY COATED LONGITUDINAL REBAR SHALL HAVE A MINIMUM LAP SPLICE OF 38 INCHES. WIRE STRAND LONGITUDINAL REINFORCEMENT SHALL BE BUTT WELDED OR MECHANICALLY SPLICED TO MAINTAIN 100 PERCENT OF THE MINIMUM REQUIRED TENSILE STRENGTH.
15. ALL INCIDENTAL WORK AND MATERIAL SUCH AS DOWELS, GROUT, ANCHORS, BOLTS, PINS, JOINT MATERIAL, EXCAVATION FOR BASES, CONTINUOUS LONGITUDINAL REINFORCEMENT, SHALL BE INCLUDED IN THE COST OF GUARDRAIL.
16. RETROREFLECTORIZATION IS REQUIRED ON ALL BARRIER TYPES. SEE BARRIER RETROREFLECTOR NOTES ON STANDARD PLAN S-612-1.

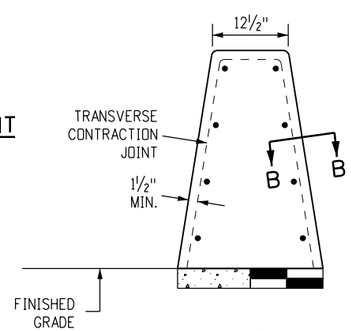

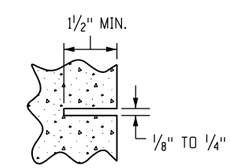

SECTION B-B

TRANSVERSE CONTRACTION JOINTS

FORMED OR SAWED TRANSVERSE CONTRACTION JOINTS ARE REQUIRED AT 20 FT. INTERVALS OR THE INTERVALS SHALL MATCH THE CONCRETE PAVEMENT JOINTS FOR INSTALLATIONS THAT ARE ON TOP OF THE CONCRETE ROADWAY PAVEMENT. SEE CONCRETE BARRIER STYLE CA FOR TYPICAL DIMENSIONS.

Computer File Information		Sheet Revisions	
Creation Date: 07/31/19		Date:	Comments
Designer Initials: JBK	R-X		
Last Modification Date: 02/17/23	R-X		
Detailer Initials: LTA	R-X		
CAD Ver.: MicroStation V8 Scale: Not to Scale Units: English	R-X		

Colorado Department of Transportation
2829 West Howard Place
CDOT HQ, 3rd Floor
Denver, CO 80204
Phone: 303-757-9021 FAX: 303-757-9868
Construction Engineering Services JBK

GUARDRAIL TYPE 9 SINGLE SLOPE BARRIER

Issued by the Project Development Branch: July 31, 2019

STANDARD PLAN NO.
M-606-15
Standard Sheet No. 1 of 11
Project Sheet Number:

NOTES

1. SEE SHEET 3 FOR END -NCHOR-GE REQUIREMENTS. -T - MINIMUM, THE B-RRIER SH-LL BE -NCHORED -T THE ENDS -ND -T INTERRUPTIONS WITH THE - 10 FOOT -NCHOR-GE. THE -NCHOR-GE. SH-LL BE MONOLITHIC OR DOWELED WITH 2-#8 X 8" @ 2'-0 B-RS.
2. SEE SHEET 1 FOR CONCRETE B-RRIER STYLE C- -ND STYLE CC.
3. TR-NSITION TO EXISTING CONCRETE B-RRIER INST-LL-TIONS OF DISSIMIL-R SH-PE SH-LL BE -CCOMPLISHED IN ONE 15 FOOT LONG SEGMENT OF B-RRIER.
4. SEE SHEET 6 FOR CONCRETE B-RRIER STYLE C- TR-NSITIONS -T BRIDGE COLUMNS -ND SIGN PEDEST-LS IN MEDI-NS.
5. FOR STYLE C- CONNECTIONS TO STRUCTURES, SEE THE BRIDGE PL-NS.

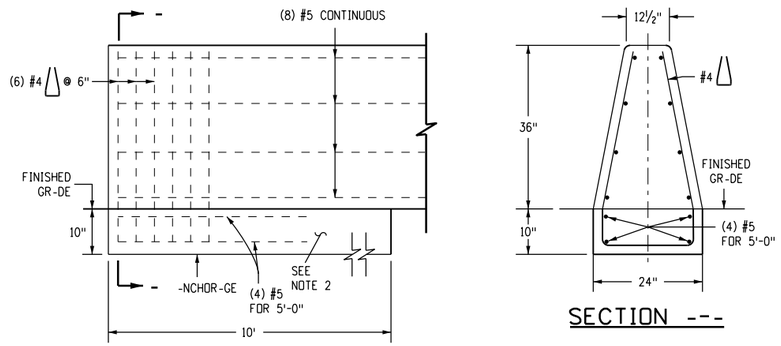

SECTION -- -

END -NCHOR-GE

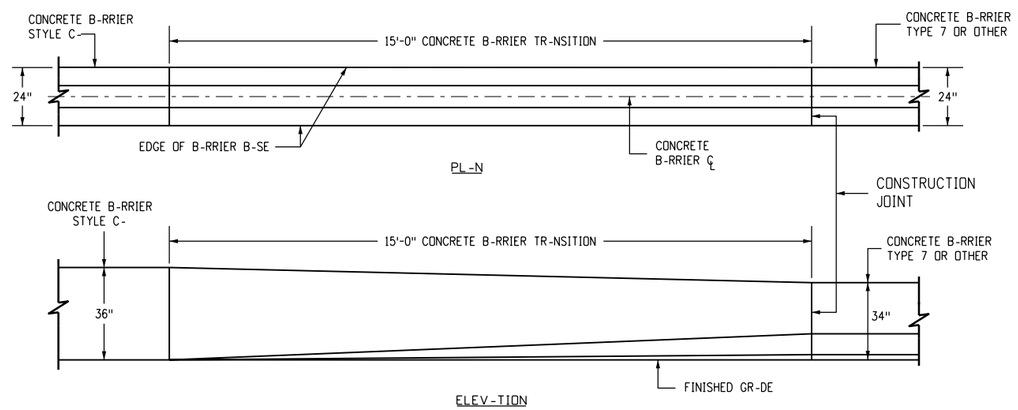

TR-NSITION CONCRETE B-RRIER TYPE 9 TO CONCRETE B-RRIER TYPE 7 OR EXISTING

Computer File Information		Sheet Revisions	
Creation Date: 07/31/19		Date:	Comments
Designer Initials: JBK	R-X		
Last Modification Date: 02/17/23	R-X		
Detailer Initials: LTA	R-X		
C-D Ver.: MicroStation V8 Scale: Not to Scale Units: English	R-X		

Colorado Department of Transportation
2829 West Howard Place
CDOT HQ, 3rd Floor
Denver, CO 80204
Phone: 303-757-9021 FAX: 303-757-9868
Construction Engineering Services JBK

GUARDRAIL TYPE 9 SINGLE SLOPE BARRIER

Issued by the Project Development Branch: July 31, 2019

STANDARD PLAN NO.
M-606-15
Standard Sheet No. 2 of 11
Project Sheet Number:

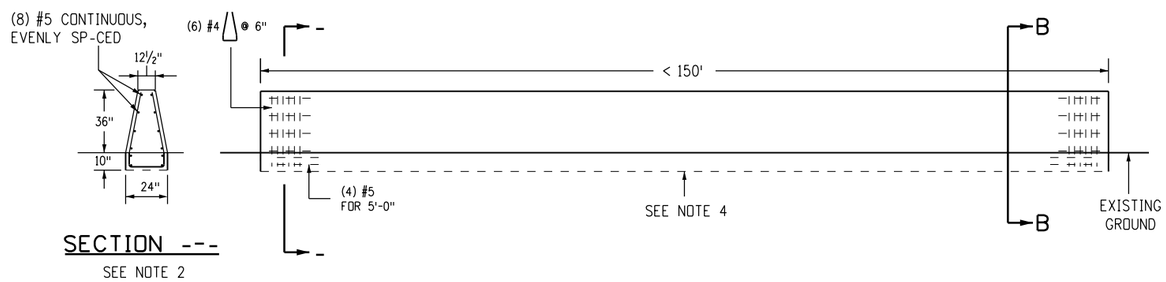

CONCRETE B-RRIER END -NCHOR-GE UNDER 150 FEET

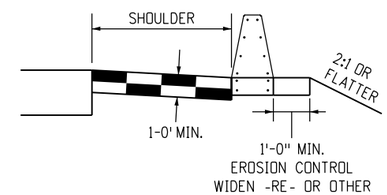

SECTION B-B

NOTES

1. SEE PL-NS FOR CONCRETE B-RRIER LENGTHS LESS TH-N 150 FEET -ND/OR HINGE WIDTHS EQU-L TO OR LESS TH-N 1 FOOT BEHIND THE CONCRETE B-RRIER.
2. SEE SHEET 2 FOR REINFORCING B-R DET-ILS.
3. NEW CONCRETE B-RRIERS UNDER 150 FEET SH-LL BE DOWELED INTO EXISTING CONCRETE BRIDGE B-RRIERS OR WINGW-LLS TO MINIMIZE ROT-TIONS TO -NY OF THEM. SEE SHEET 1 FOR DOWEL PL-CEMENT L-YOUT.
4. FOR END -NCHOR-GES UNDER 150 FEET, CONSTRUCT THE -NCHOR-GE FOR THE ENTIRE LENGTH OF THE CONCRETE B-RRIER.
5. FOR CONCRETE B-RRIER RUNS GRE-TER TH-N 150 FEET BUT LESS TH-N 500 FEET, THE RUN SH-LL BE -NCHORED -T THE ENDS -ND -T G-PS, SUCH -S -N EMERGENCY -CCESS.
6. FOR END -NCHOR-GES OVER 500 FEET, CONSTRUCT -NCHOR-GES EVERY 250 FEET.
7. REINFORCING STEEL IN -NCHOR-GE SH-LL BE GR-DE 60 EPOXY CO-TED DEFORMED B-RS.
8. CONCRETE SH-LL BE CL-SS D.
9. -LL INCIDENT-L WORK -ND -DDITION-L M-TERI-LS SH-LL BE INCLUDED IN THE COST OF THE CONCRETE B-RRIER.

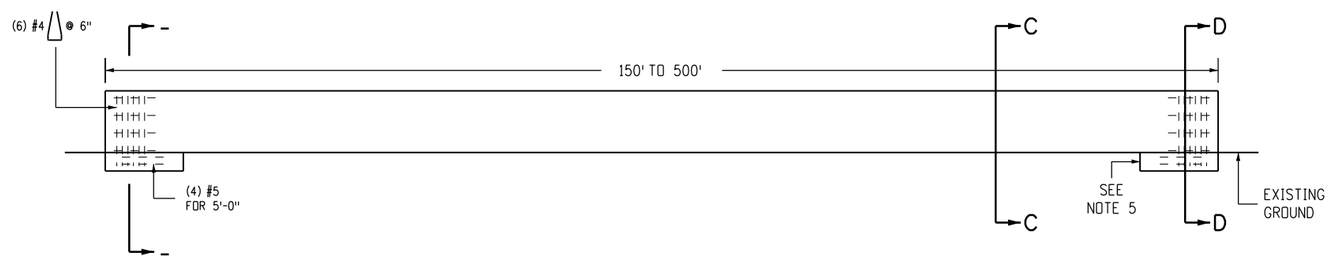

CONCRETE B-RRIER END -NCHOR-GE BETWEEN 150 FEET -ND 500 FEET

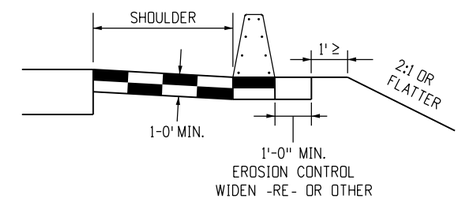

SECTION C-C

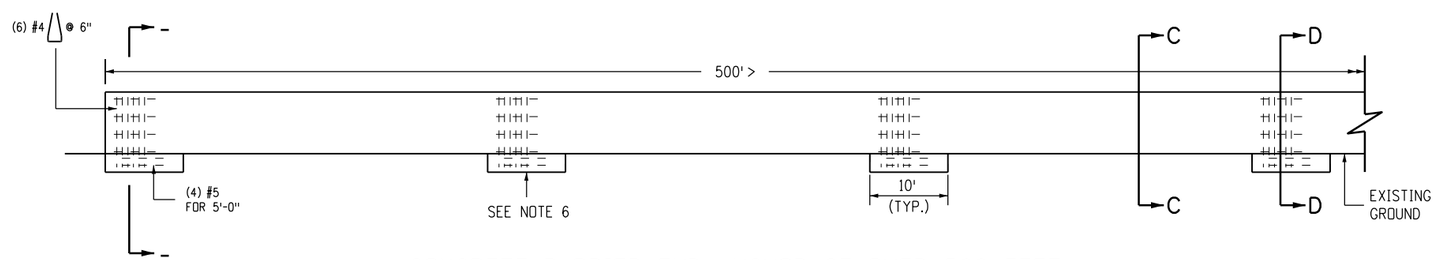

CONCRETE B-RRIER END -NCHOR-GE OVER 500 FEET

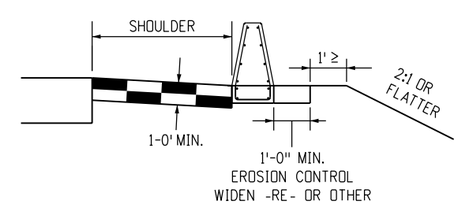

SECTION D-D

Computer File Information		Sheet Revisions	
Creation Date: 07/31/19		Date:	Comments
Designer Initials: JBK	R-X		
Last Modification Date: 02/17/23	R-X		
Detailer Initials: LTA	R-X		
C-D Ver.: MicroStation V8 Scale: Not to Scale Units: English	R-X		

Colorado Department of Transportation
2829 West Howard Place
CDOT HQ, 3rd Floor
Denver, CO 80204
Phone: 303-757-9021 FAX: 303-757-9868
Construction Engineering Services JBK

GUARDRAIL TYPE 9 SINGLE SLOPE BARRIER

Issued by the Project Development Branch: July 31, 2019

STANDARD PLAN NO.
M-606-15
Standard Sheet No. 3 of 11
Project Sheet Number:

NOTES

1. SEE SHEET 5 FOR DETAILS OF CONCRETE BARRIER STYLE CGE/CG END ANCHORS CONNECTIONS TO STRUCTURES AND TRANSITIONS TO GUARDRAIL TYPE 7.
2. WHERE ROADBED OFFSET IS GREATER THAN 1½ INCH, SEE CONCRETE BARRIER TYPE CGE.
3. BARRIER FOUNDATION SHALL BE PAVEMENT, OR COMPACTED AGGREGATE BASE, OR COMPACTED EMBANKMENT MATERIAL.
4. RETROREFLECTORIZATION IS REQUIRED ON ALL BARRIER TYPES. SEE THE BARRIER RETROREFLECTOR NOTES ON STANDARD PLAN S-612-1.

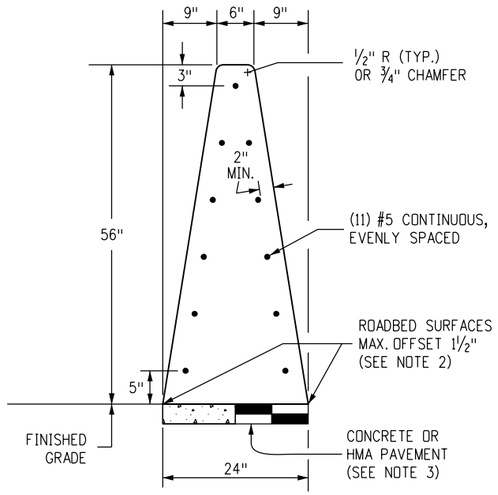

CONCRETE BARRIER STYLE CG (56")

MONOLITHIC CONCRETE GLARE SCREEN/BARRIER

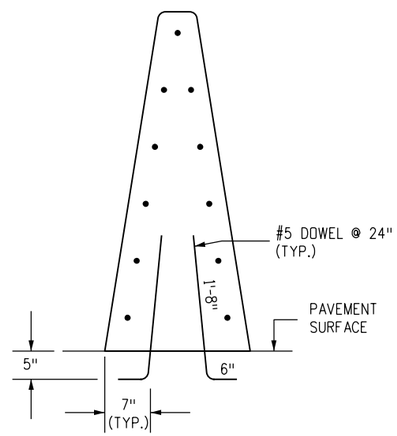

CONCRETE BARRIER STYLE CGC

DETAILS SIMILAR TO STYLE CG EXCEPT AS NOTED.
BARRIER DOWELLED TO CONCRETE SURFACES.

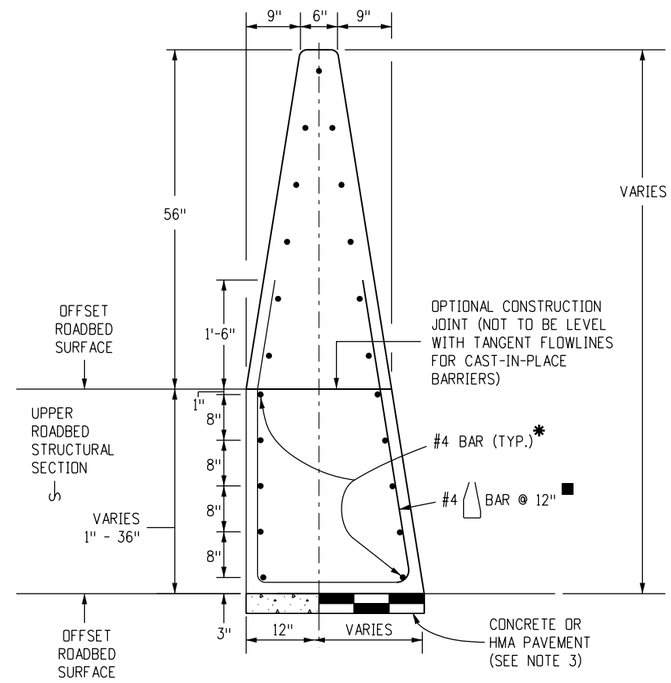

CONCRETE BARRIER STYLE CGE

DETAILS SIMILAR TO STYLE CE EXCEPT AS NOTED.
USE CONCRETE BARRIER END ANCHOR WHEN NECESSARY.
SHOWN WITH A 36 INCH ROADBED SURFACES OFFSET.
BARRIER FOR OFFSET ROADWAYS.

* FOR SURFACES OFFSETS LESS THAN OR EQUAL TO 3 INCHES, NO ADDITIONAL REINFORCEMENT IS REQUIRED.

SURFACE OFFSETS GREATER THAN 3 INCHES WILL REQUIRE ADDITIONAL REINFORCEMENT AS SHOWN.

THE LOWEST LAYER OF TWO #4 SHALL BE 3 INCHES ABOVE THE BOTTOM OF THE BARRIER. EACH VERTICAL INCREMENT OF 8 INCHES MEASURED FROM THE LOWEST LAYER OF REINFORCEMENT SHALL INCLUDE AN ADDITIONAL TWO #4.

■ REINFORCING STIRRUP NOT REQUIRED FOR ROADBED OFFSETS LESS THAN 1 FOOT.

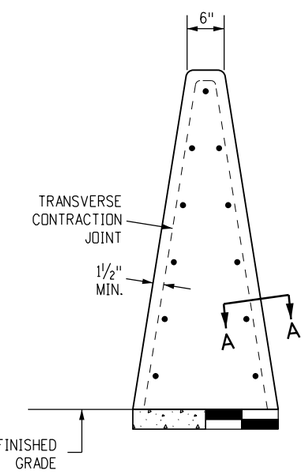

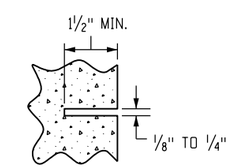

SECTION A-A

TRANSVERSE CONTRACTION JOINTS

FORMED OR SAWED TRANSVERSE CONTRACTION JOINTS ARE REQUIRED AT 20 FT. INTERVALS OR THE INTERVALS SHALL MATCH THE CONCRETE PAVEMENT JOINTS FOR INSTALLATIONS THAT ARE ON TOP OF THE CONCRETE ROADWAY PAVEMENT. SEE CONCRETE BARRIER STYLE CG FOR TYPICAL DIMENSIONS.

Computer File Information		Sheet Revisions	
Creation Date: 07/31/19		Date:	Comments
Designer Initials: JBK	(R-X)		
Last Modification Date: 02/17/23	(R-X)		
Detailer Initials: LTA	(R-X)		
CAD Ver.: MicroStation V8 Scale: Not to Scale Units: English	(R-X)		

Colorado Department of Transportation
2829 West Howard Place
CDOT HQ, 3rd Floor
Denver, CO 80204
Phone: 303-757-9021 FAX: 303-757-9868
Construction Engineering Services JBK

GUARDRAIL TYPE 9 SINGLE SLOPE BARRIER

Issued by the Project Development Branch: July 31, 2019

STANDARD PLAN NO.
M-606-15
Standard Sheet No. 4 of 11
Project Sheet Number:

NOTES

1. SEE SHEET 3 FOR END -NCHOR-GE REQUIREMENTS. -T - MINIMUM, THE B-RRIER SH-LL BE -NCHORED -T THE ENDS -ND -T INTERRUPTIONS WITH THE 10 FOOT -NCHOR-GE. -NCHOR-GE SH-LL BE MONOLITHIC OR DOWELED WITH 2-#8 X 8" @ 2'-0 B-RS.
2. SEE SHEET 4 FOR CONCRETE B-RRIER STYLE CG -ND STYLE CGC.
3. SEE SHEET 9 FOR TR-NSITION TO THRIE BE-MS.
4. TR-NSITION TO EXISTING CONCRETE B-RRIER INST-LL-TIONS OF DISSIMIL-R SH-PE SH-LL BE -CCOMPLISHED IN ONE 15 FOOT LONG SEGMENT OF B-RRIER.
5. SEE SHEET 6 FOR CONCRETE B-RRIER STYLE C- TR-NSITIONS -T BRIDGE COLUMNS -ND SIGN PEDEST-LS IN MEDI-NS.
6. FOR STYLE CG CONNECTIONS TO STRUCTURES, SEE THE BRIDGE PL-NS.

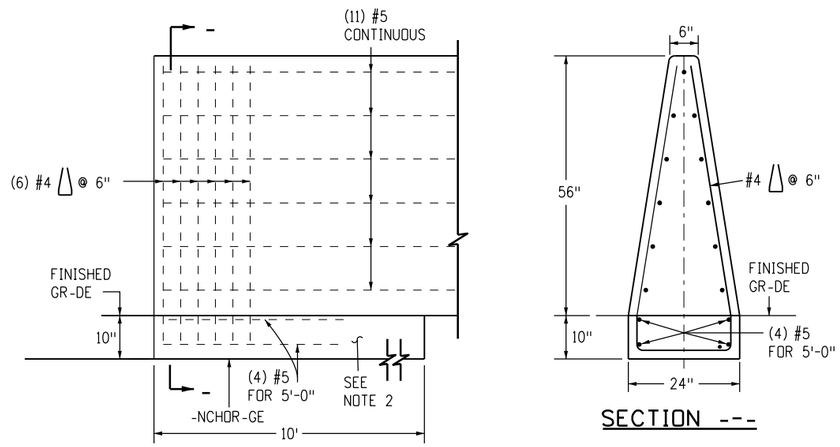

SECTION -A-A

-NCHOR-GE

B-RRIER ELEV-TION VIEW INCLUDING REINFORCED -NCHOR-GE -T END.

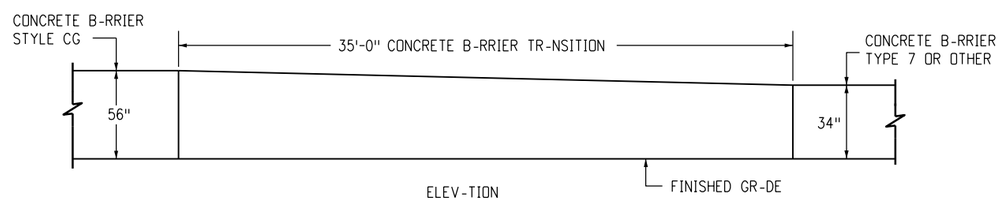

TR-NSITION CONCRETE B-RRIER STYLE CGE/CG TO CONCRETE B-RRIER TYPE 7 OR EXISTING

Computer File Information		Sheet Revisions	
Creation Date: 07/31/19		Date:	Comments
Designer Initials: JBK	(R-X)		
Last Modification Date: 02/17/23	(R-X)		
Detailer Initials: LTA	(R-X)		
C-D Ver.: MicroStation V8 Scale: Not to Scale Units: English	(R-X)		

Colorado Department of Transportation
2829 West Howard Place
CDOT HQ, 3rd Floor
Denver, CO 80204
Phone: 303-757-9021 FAX: 303-757-9868
Construction Engineering Services JBK

GUARDRAIL TYPE 9 SINGLE SLOPE BARRIER

Issued by the Project Development Branch: July 31, 2019

STANDARD PLAN NO.
M-606-15
Standard Sheet No. 5 of 11
Project Sheet Number:

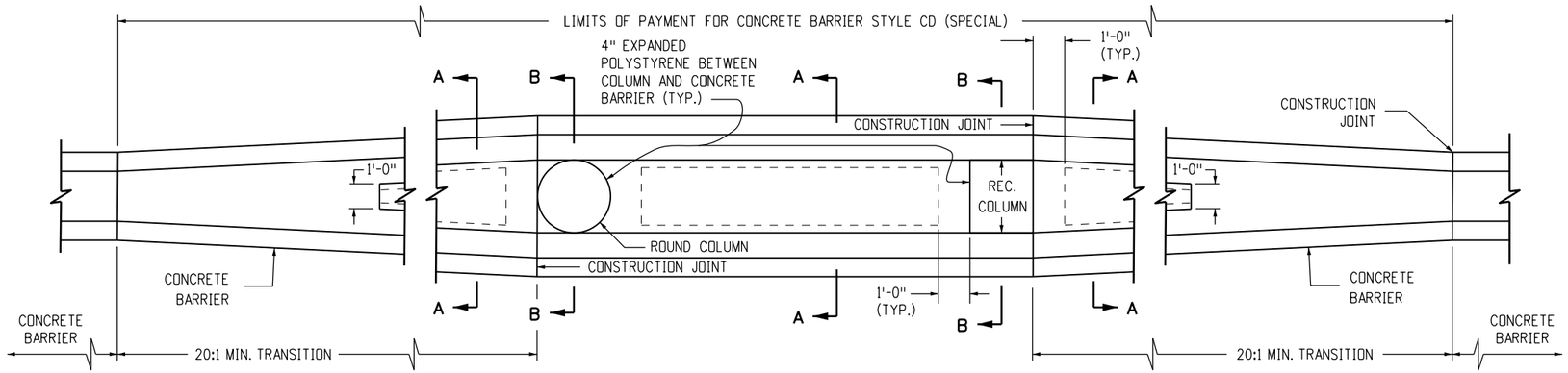

CONCRETE BARRIER TRANSITION AT BRIDGE COLUMNS

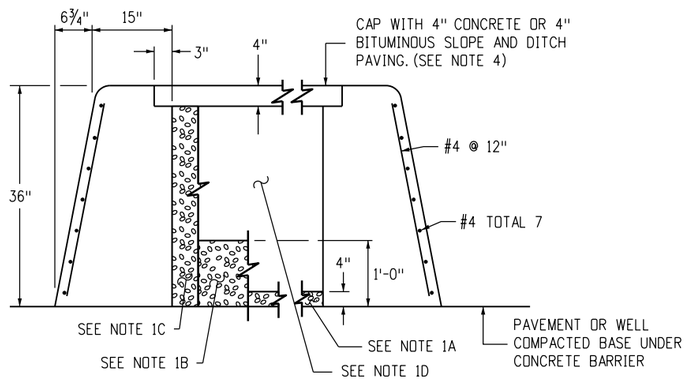

SECTION A-A

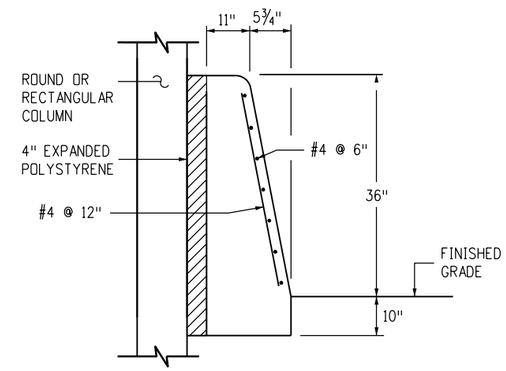

SECTION B-B

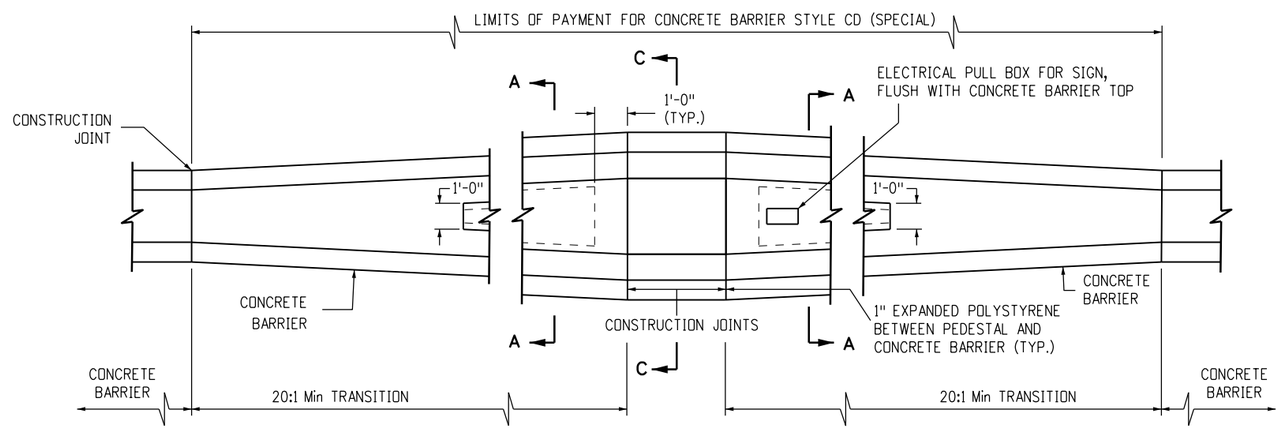

CONCRETE BARRIER TRANSITION AT SIGN PEDESTAL

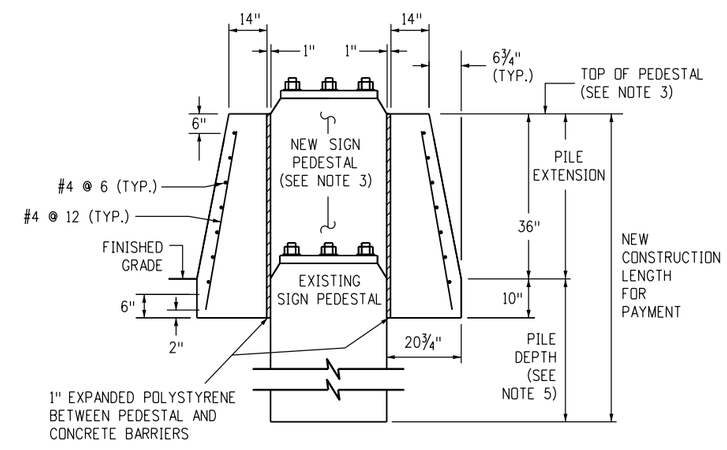

SECTION C-C

NOTES

1. THE CONTRACTOR'S OPTIONS FOR FILL BETWEEN CONCRETE BARRIER WALLS:
   A. PLACE 4 INCHES OF POLYSTYRENE AT BASE BETWEEN CONCRETE BARRIER WALLS.
   B. PLACE 1 FOOT OF GRANULAR MATERIAL AT BASE BETWEEN WALLS.
   C. PLACE GRANULAR MATERIAL FROM BASE TO BOTTOM OF 4 INCH CAP.
   D. MONOLITHIC CONCRETE WITH FOAM BLOCKOUTS IS NOT PERMITTED.
2. REINFORCING STEEL SHALL EXTEND CONTINUOUS THROUGH CONSTRUCTION JOINTS.
3. SEE OVERHEAD SIGN PLANS FOR SIGN PEDESTAL ELEVATIONS FOR NEW CONSTRUCTION.
4. ADJUST HEIGHT OF CONCRETE BARRIER WALL ON LOW SIDE OF OFFSET OR SUPERELEVATED ROADWAYS TO PROVIDE LEVEL GRADE ACROSS TOP OF CONCRETE BARRIER CAP.
5. FOR OVERHEAD SIGNS, SEE STANDARD PLAN S-614-60.
6. TYPE 9 IS A MASH TEST LEVEL 3 (TL-3) APPROVED CONCRETE BARRIER DESIGNED FOR REDIRECTION AND PROTECTION FROM MOST STANDARD ROADSIDE OBSTACLES. TO PROTECT PIERS AND OTHER STRUCTURAL BRIDGE SUPPORTS, A MASH TL-5 DESIGN MAY BE REQUIRED.

Computer File Information		Sheet Revisions	
Creation Date: 07/31/19		Date:	Comments
Designer Initials: JBK	(R-X)	03/05/20	Added General Note 6.
Last Modification Date: 02/17/23	(R-X)		
Detailer Initials: LTA	(R-X)		
CAD Ver.: MicroStation V8 Scale: Not to Scale Units: English	(R-X)		

Colorado Department of Transportation
2829 West Howard Place
CDOT HQ, 3rd Floor
Denver, CO 80204
Phone: 303-757-9021 FAX: 303-757-9868
Construction Engineering Services JBK

GUARDRAIL TYPE 9 SINGLE SLOPE BARRIER

Issued by the Project Development Branch: July 31, 2019

STANDARD PLAN NO.
M-606-15
Standard Sheet No. 6 of 11
Project Sheet Number:

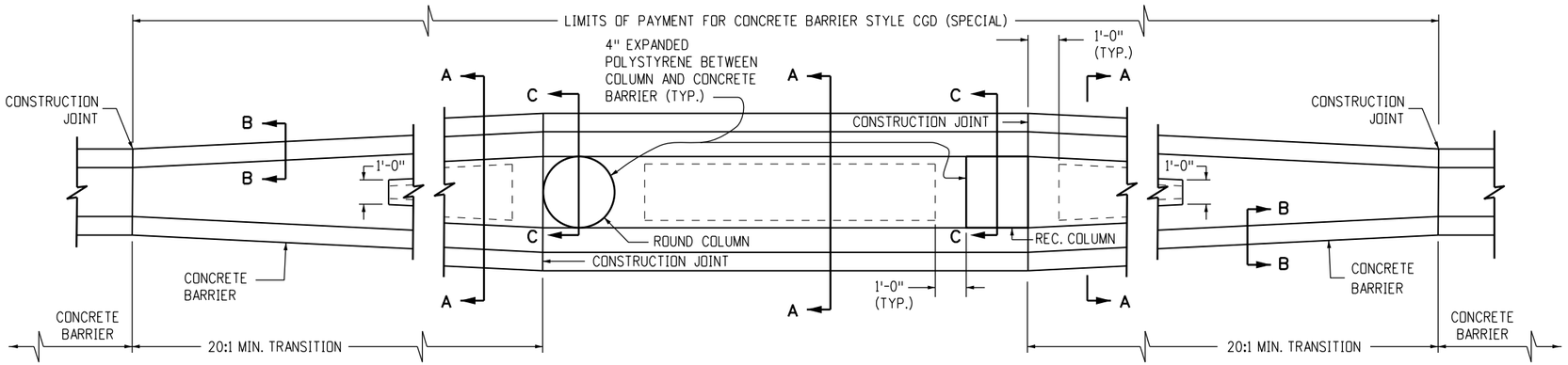

CONCRETE BARRIER TRANSITION AT BRIDGE COLUMNS

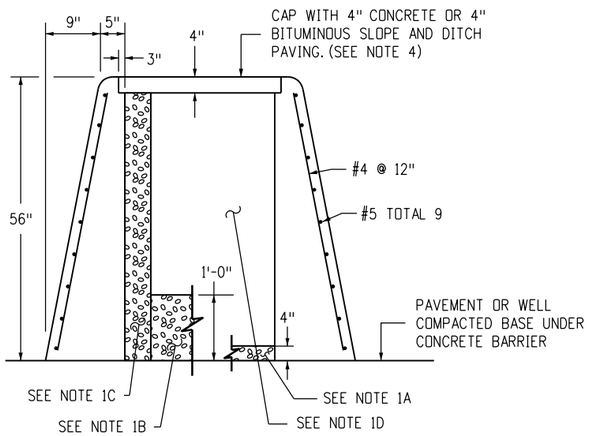

SECTION A-A

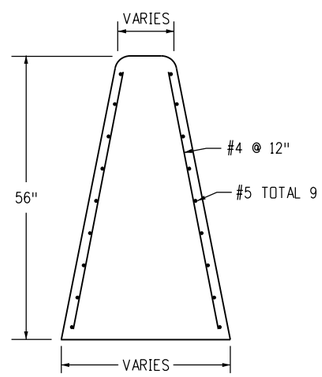

SECTION B-B

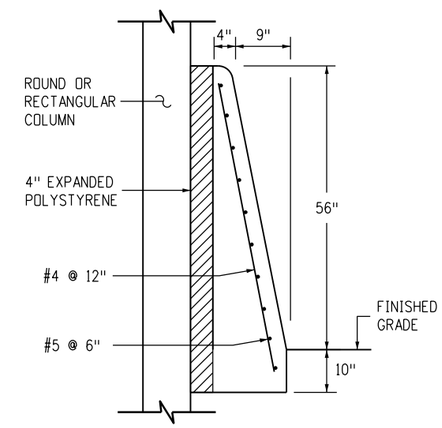

SECTION C-C

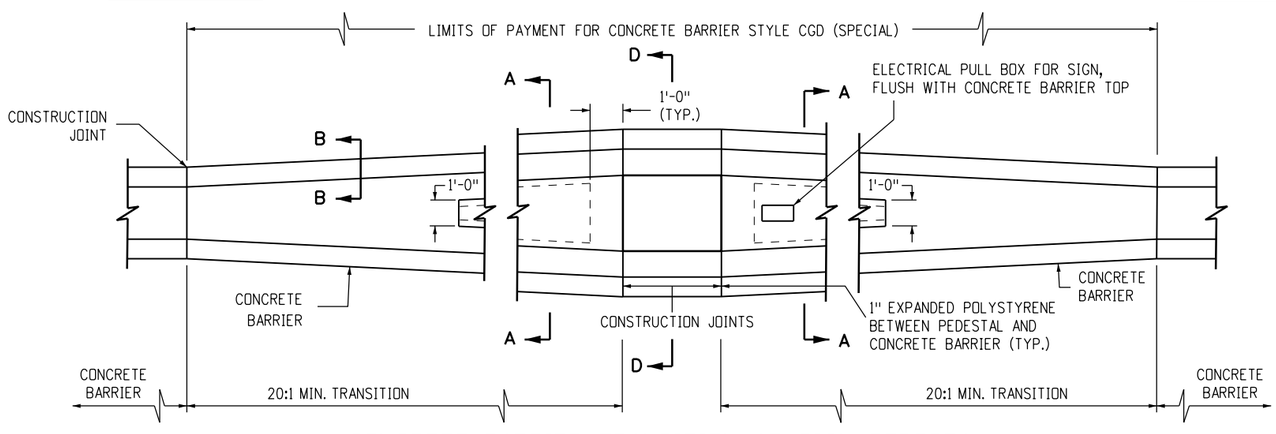

CONCRETE BARRIER TRANSITION AT SIGN PEDESTAL

NOTES

1. THE CONTRACTOR'S OPTIONS FOR FILL BETWEEN CONCRETE BARRIER WALLS:
   A. PLACE 4 INCHES OF POLYSTYRENE AT BASE BETWEEN CONCRETE BARRIER WALLS.
   B. PLACE 1 FOOT OF GRANULAR MATERIAL AT BASE BETWEEN WALLS.
   C. PLACE GRANULAR MATERIAL FROM BASE TO BOTTOM OF 4 INCH CAP.
   D. MONOLITHIC CONCRETE WITH FOAM BLOCKOUTS IS NOT PERMITTED.
2. REINFORCING STEEL SHALL EXTEND CONTINUOUS THROUGH CONSTRUCTION JOINTS.
3. SEE OVERHEAD SIGN PLANS FOR SIGN PEDESTAL ELEVATIONS FOR NEW CONSTRUCTION.
4. ADJUST HEIGHT OF CONCRETE BARRIER WALL ON LOW SIDE OF OFFSET OR SUPERELEVATED ROADWAYS TO PROVIDE LEVEL GRADE ACROSS TOP OF CONCRETE BARRIER CAP.
5. FOR OVERHEAD SIGNS, SEE STANDARD PLAN S-614-60.
6. TYPE 9 IS A MASH TEST LEVEL 3 (TL-3) APPROVED CONCRETE BARRIER DESIGNED FOR REDIRECTION AND PROTECTION FROM MOST STANDARD ROADSIDE OBSTACLES. TO PROTECT PIERS AND OTHER STRUCTURAL BRIDGE SUPPORTS, A MASH TL-5 DESIGN MAY BE REQUIRED.

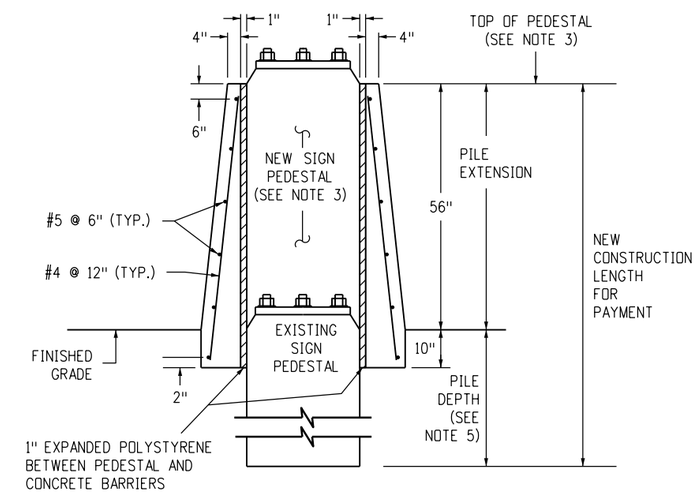

SECTION D-D

Computer File Information		Sheet Revisions	
Creation Date: 07/31/19		Date:	Comments
Designer Initials: JBK	(R-X)	03/05/20	Added General Note 6.
Last Modification Date: 02/17/23	(R-X)		
Detailer Initials: LTA	(R-X)		
CAD Ver.: MicroStation V8 Scale: Not to Scale Units: English	(R-X)		

Colorado Department of Transportation
2829 West Howard Place
CDOT HQ, 3rd Floor
Denver, CO 80204
Phone: 303-757-9021 FAX: 303-757-9868
Construction Engineering Services JBK

GUARDRAIL TYPE 9 SINGLE SLOPE BARRIER

Issued by the Project Development Branch: July 31, 2019

STANDARD PLAN NO.
M-606-15
Standard Sheet No. 7 of 11
Project Sheet Number:

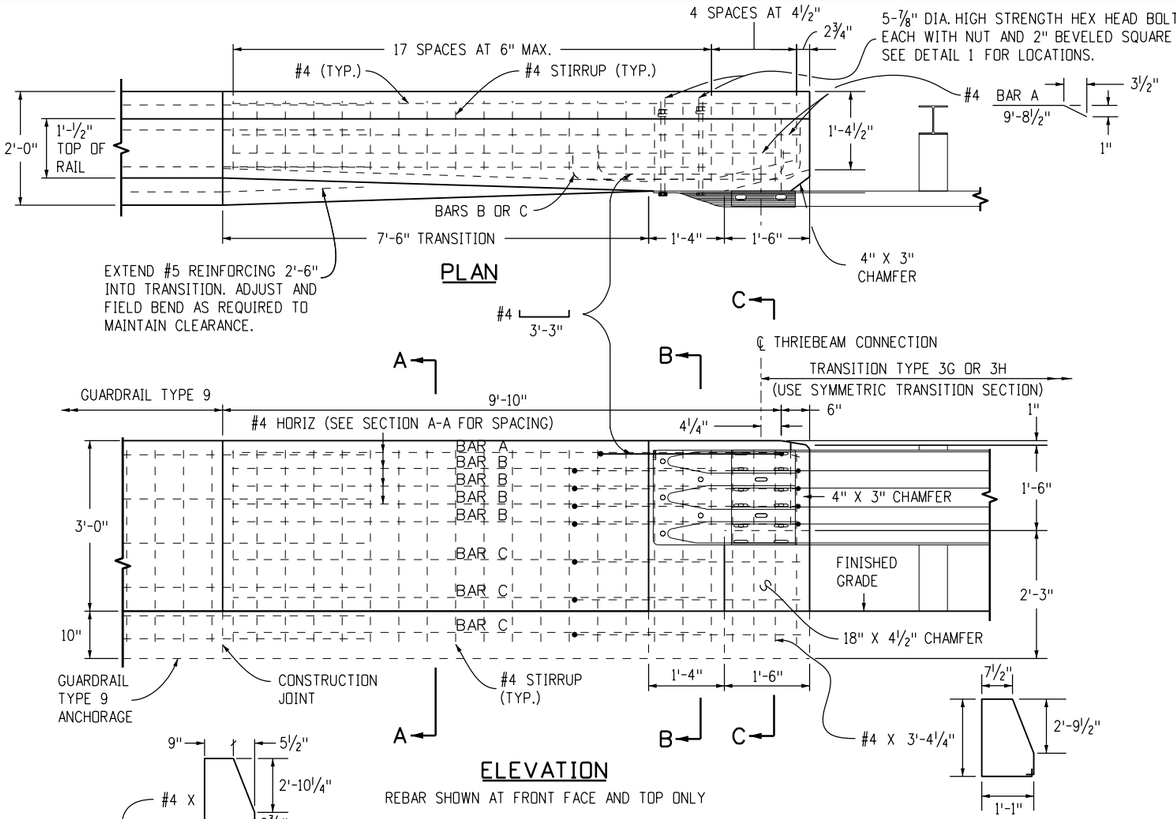

ELEVATION

REBAR SHOWN AT FRONT FACE AND TOP ONLY

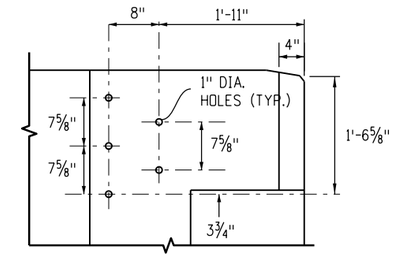

NOTE: HOLES SHALLED BE CORED THROUGH CONCRETE OR 1" INSIDE DIAMETER FULL DEPTH INSERTS PLACED BEFORE CONCRETE PLACEMENT.

DETAIL 1

NOTES

1. PAYMENT WILL BE MADE UNDER ITEM 606, TRANSITION TYPE GR9-GR3, CONSISTING OF CONCRETE (CLASS D), REINFORCING STEEL AND OTHER ITEMS SHOWN, INCLUDING ANY EXCAVATION AND BACKFILL REQUIRED.
2. TRANSITIONS MAY BE CONSTRUCTED PERPENDICULAR TO ROADWAY CROSS SLOPE. VERTICAL DIMENSIONS ARE PERPENDICULAR TO THE LONGITUDINAL ROADWAY GRADE.
3. CONCRETE AND REINFORCING STEEL SHALL CONFORM TO THE REQUIREMENTS OF SECTIONS 601 & 606 AND 602 RESPECTIVELY UNLESS OTHERWISE NOTED.
4. ALL REINFORCEMENTS SHALL BE LOCATED A MINIMUM OF 2 INCHES AWAY FROM THE OUTER EDGE OF THE CONCRETE.

DESIGN DATA:

REINFORCING STEEL: FY = 60 KSI

CONCRETE: CLASS D: F'C = 4.5 KSI

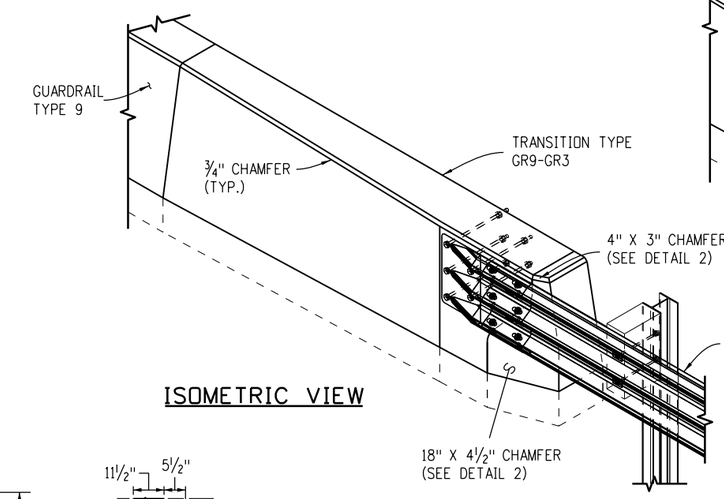

ISOMETRIC VIEW

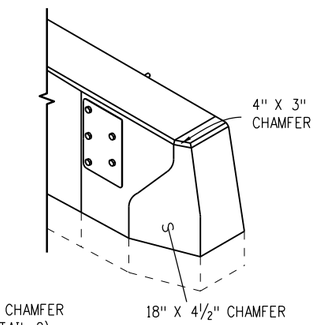

DETAIL 2

CHAMFER TRANSISTION

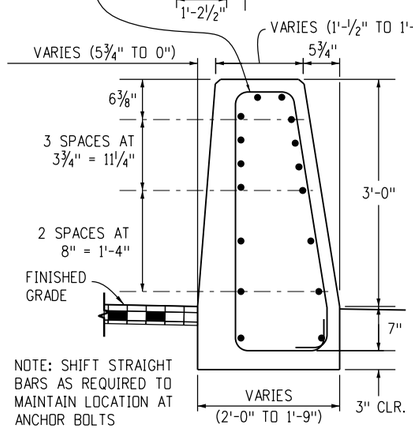

SECTION A-A

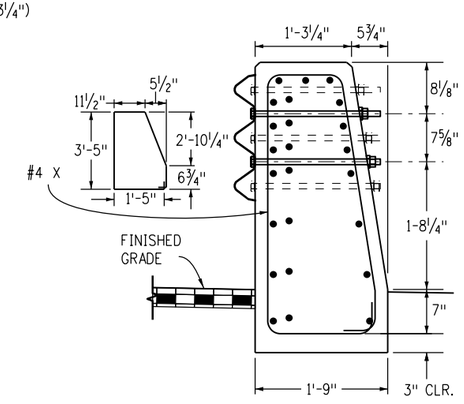

SEE SECTION A-A FOR REINFORCING SPACING

SECTION B-B

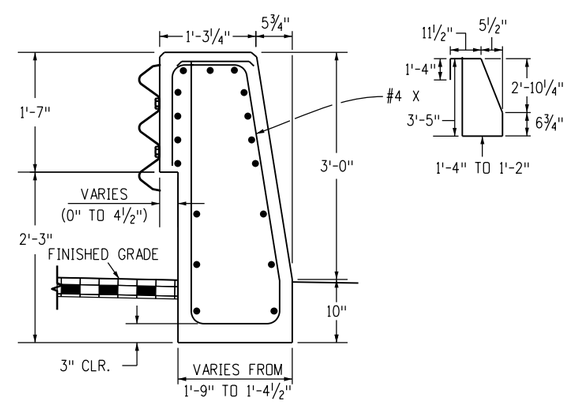

SEE SECTION A-A FOR REINFORCING SPACING

SECTION C-C

INFORMATION ONLY

DESCRIPTION	UNIT	EACH
STRUCTURAL STEEL (GALVANIZED)	LB	22
CONCRETE CLASS D	CY	2.4
REINFORCING STEEL (EPOXY COATED)	LB	301

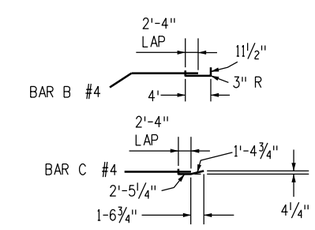

REINFORCING DIMENSIONS (FRONT BARS)

Computer File Information	
Creation Date: 07/31/19	
Designer Initials: JBK	(R-X)
Last Modification Date: 02/17/23	(R-X)
Detailer Initials: LTA	(R-X)
CAD Ver.: MicroStation V8 Scale: Not to Scale Units: English	(R-X)

Sheet Revisions	
Date:	Comments
03/05/20	Completely revised this sheet for the new roadway transition type GR9-GR3.
12/14/21	Deleted macro fiber Concrete Class D in urban areas note under Design Data.
02/17/23	Simplified Steel Reinforcing Details

Colorado Department of Transportation
2829 West Howard Place
CDOT HQ, 3rd Floor
Denver, CO 80204
Phone: 303-757-9021 FAX: 303-757-9868
Construction Engineering Services JBK

GUARDRAIL TYPE 9 SINGLE SLOPE BARRIER

Issued by the Project Development Branch: July 31, 2019

STANDARD PLAN NO.

M-606-15

Standard Sheet No. 8 of 11

Project Sheet Number:

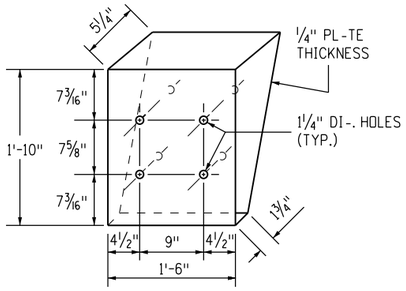

DET-IL -
BEVELED MET-L BOX SP-CE
(SEE NOTE 1)

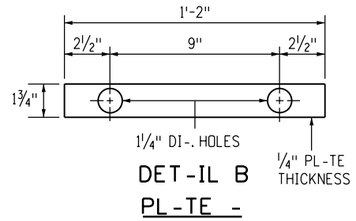

DET-IL B
PL-TE -

LEGEND

- (-) NESTED THRIE BE-M ELEMENTS (ONE 12 G-UGE ELEMENT NESTED OVER ONE 10 G-UGE ELEMENT).
- (B) ONE 10 G-UGE THRIE BE-M ELEMENT.
- (C) ONE 12 G-UGE THRIE BE-M ELEMENT.

10 G-UGE = 0.135" THICK

12 G-UGE = 0.108" THICK

NOTES

1. WHERE BEVELED MET-L BOX SP-CERS -RE INST-LLED, PL-CE - 11¼ INCH X 3¼ INCH -ND - 1¼ INCH X 2 INCH PIPE SP-CERS ON 1 INCH HS BOLTS P-SSING THROUGH THE INTERIOR OF BOX.
2. -LL MET-L BOXES SH-LL BE G-LV-NIZED.

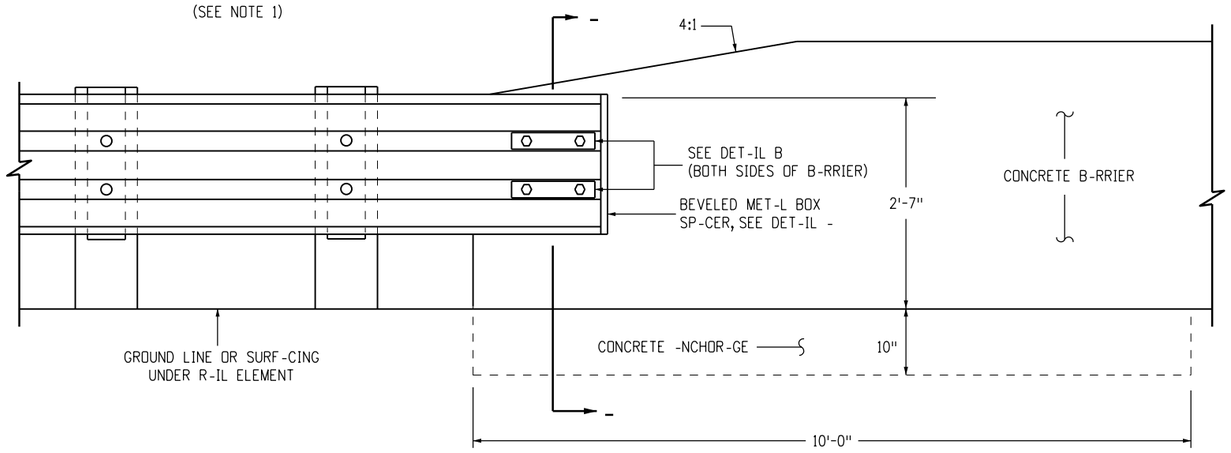

ELEV-TION

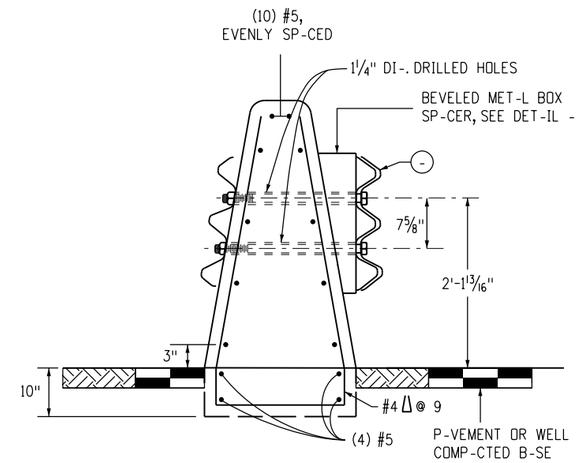

SECTION -

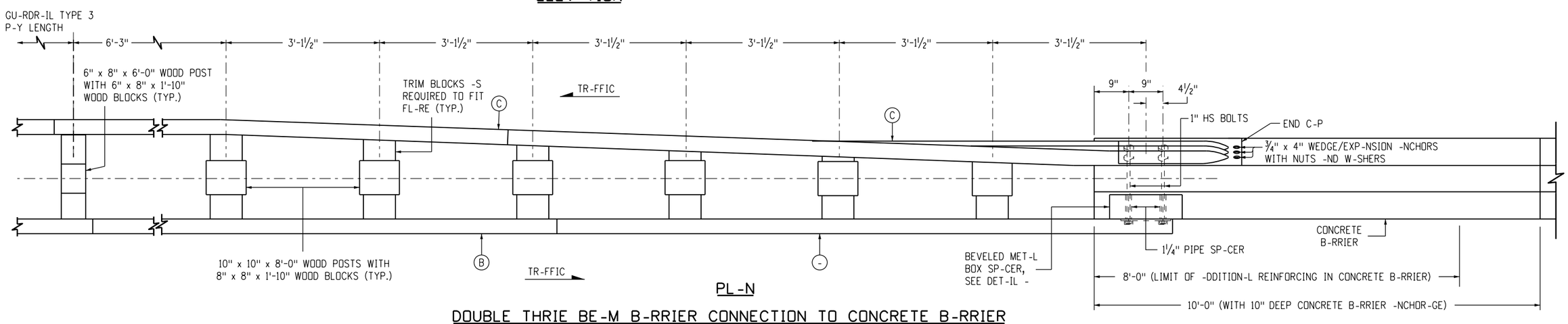

PL-N

DOUBLE THRIE BE-M B-RRIER CONNECTION TO CONCRETE B-RRIER

Computer File Information		Sheet Revisions	
Creation Date: 07/31/19		Date:	Comments
Designer Initials: JBK	(R-X)		
Last Modification Date: 02/17/23	(R-X)		
Detailer Initials: LTA	(R-X)		
C-D Ver.: MicroStation V8 Scale: Not to Scale Units: English	(R-X)		

Colorado Department of Transportation
2829 West Howard Place
CDOT HQ, 3rd Floor
Denver, CO 80204
Phone: 303-757-9021 FAX: 303-757-9868
Construction Engineering Services JBK

GUARDRAIL TYPE 9 SINGLE SLOPE BARRIER

Issued by the Project Development Branch: July 31, 2019

STANDARD PLAN NO.
M-606-15
Standard Sheet No. 9 of 11
Project Sheet Number:

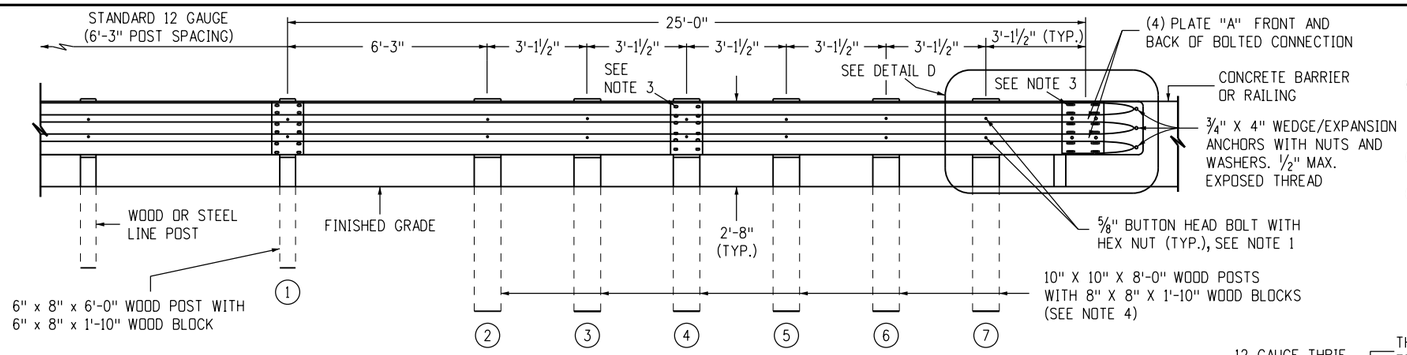

ELEVATION

LEGEND

Ⓐ NESTED THRIE BEAM ELEMENTS (ONE 12 GAUGE ELEMENT NESTED OVER ONE 10 GAUGE ELEMENT)

Ⓑ ONE 10 GAUGE THRIE BEAM ELEMENT

Ⓒ ONE 12 GAUGE THRIE BEAM ELEMENT

10 GAUGE = 0.135" THICK
12 GAUGE = 0.108" THICK

NOTES

1. USE ⅝" BUTTON HEAD BOLTS AND HEX NUTS FOR CONNECTIONS TO POSTS. NO WASHER ON RAIL FACE FOR BOLTED CONNECTIONS TO POST.
2. THE NESTED RAIL ELEMENTS, END CAP AND SINGLE 10 GAUGE THRIE BEAM ELEMENT, MAY BE SPLICED TOGETHER PRIOR TO BOLTING THE ELEMENTS TO THE WOOD POST AND CONCRETE BARRIER OR RAILING.
3. EXTERIOR SPLICE BOLT HOLES FOR RAIL ELEMENT SPLICES AT POST (4) AND THE CONNECTION TO THE CONCRETE BARRIER OR RAILING SHALL BE THE STANDARD 29/32" X 1⅛" SLOT SIZE. INTERIOR SPLICE BOLT HOLES AT THESE LOCATIONS MAY BE INCREASED UP TO 1¼". ONLY THE TOP TWO AND THE BOTTOM TWO SPLICE BOLTS WITH WASHERS AND NUTS ARE REQUIRED FOR RAIL SPLICES AT POST (4) AND THE CONNECTION TO THE CONCRETE BARRIER OR RAILING.
4. THE TOP ELEVATION OF POSTS (1) THROUGH (7) SHALL NOT PROJECT MORE THAN 1 INCH ABOVE THE TOP ELEVATION OF THE RAIL ELEMENT.
5. THE DEPTH OF THE METAL BOX SPACER VARIES FROM THE 5⅛" TO 1½" AND IS DEPENDENT ON THE WIDTH OF THE CONCRETE RAILING OR WALL. THE COMBINED DIMENSION FOR THE DEPTH OF THE METAL BOX SPACER PLUS THE WIDTH OF RAILING OR WALL IS TYPICALLY 17⅛". WHERE THE SPACE BETWEEN THE BACKSIDE OF THE CONCRETE RAILING OR WALL AND THE REAR THRIE BEAM ELEMENT IS LESS THAN 1½", METAL PLATES SIMILAR TO PLATE "A" ARE BE USED AS SPACERS.
6. WHERE THE WIDTH OF THE CONCRETE RAILING OR WALL IS GREATER THAN 17⅛", WOOD BLOCKS ARE TO BE USED TO FILL THE SPACE CREATED BETWEEN THE BACKSIDE OF POST (4) THROUGH NO. (7) AND THE REAR THRIE BEAM ELEMENT. THESE WOOD BLOCKS SHALL BE 8 INCHES IN WIDTH AND ONE FOOT-TWO INCHES IN LENGTH. THE DIMENSION BETWEEN THE FRONT THRIE BEAM ELEMENT AND THE REAR THRIE BEAM ELEMENT IS TO MATCH THE WIDTH OF THE CONCRETE RAILING OR WALL.

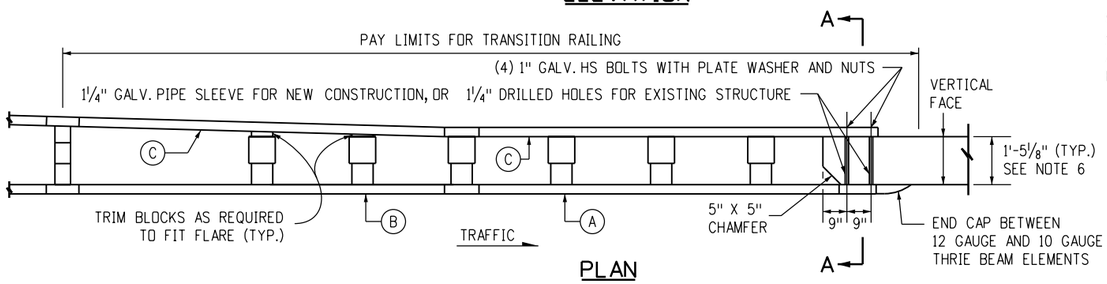

PLAN
TRANSITION RAILING
WITHOUT BLOCKOUT ATTACHMENT

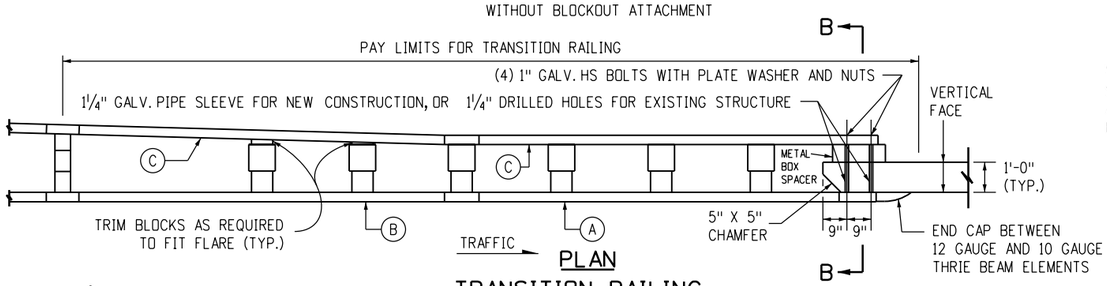

PLAN
TRANSITION RAILING
WITH BLOCKOUT ATTACHMENT

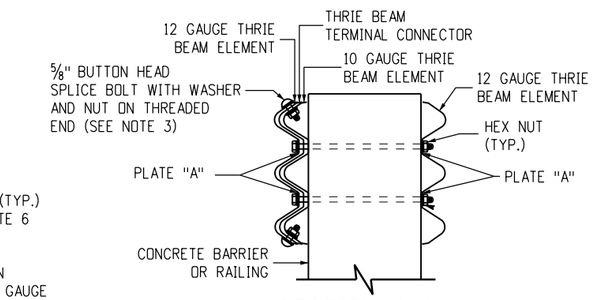

SECTION A-A

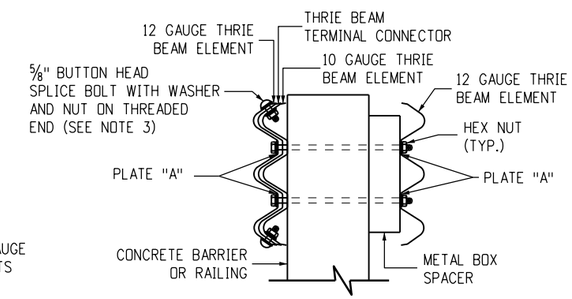

SECTION B-B

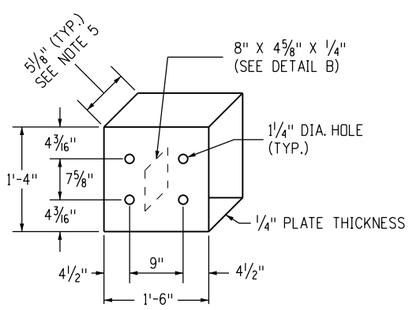

DETAIL A
PLACEMENT OF HOLES FOR FRONT AND BACK PANELS

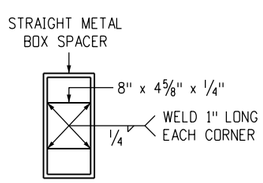

DETAIL B

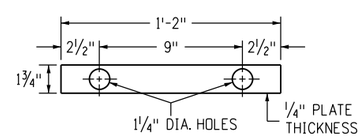

PLATE "A"
DETAIL C

STRAIGHT METAL BOX SPACER

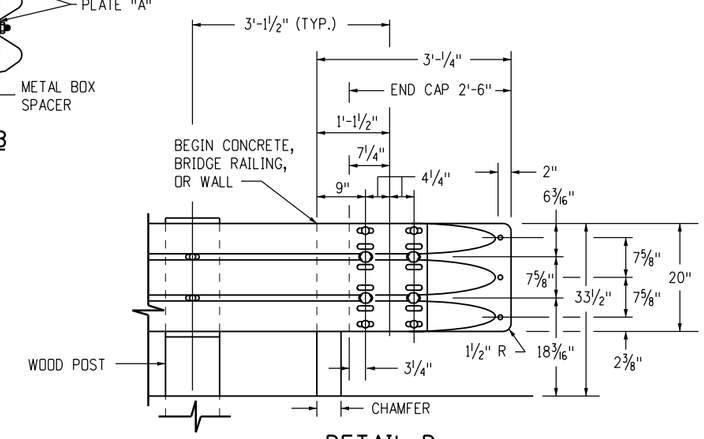

DETAIL D
SEE MANUFACTURER'S DETAILS FOR EXACT DIMENSIONS

Computer File Information		Sheet Revisions	
Creation Date: 07/31/19		Date:	Comments
Designer Initials: JBK	(R-X)		
Last Modification Date: 02/17/23	(R-X)		
Detailer Initials: LTA	(R-X)		
CAD Ver.: MicroStation V8 Scale: Not to Scale Units: English	(R-X)		

Colorado Department of Transportation
2829 West Howard Place
CDOT HQ, 3rd Floor
Denver, CO 80204
Phone: 303-757-9021 FAX: 303-757-9868
Construction Engineering Services JBK

GUARDRAIL TYPE 9 SINGLE SLOPE BARRIER

Issued by the Project Development Branch: July 31, 2019

STANDARD PLAN NO.
M-606-15
Standard Sheet No. 10 of 11
Project Sheet Number:

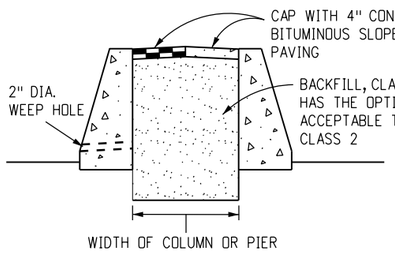

TREATMENT BETWEEN COLUMNS OR OBSTRUCTIONS

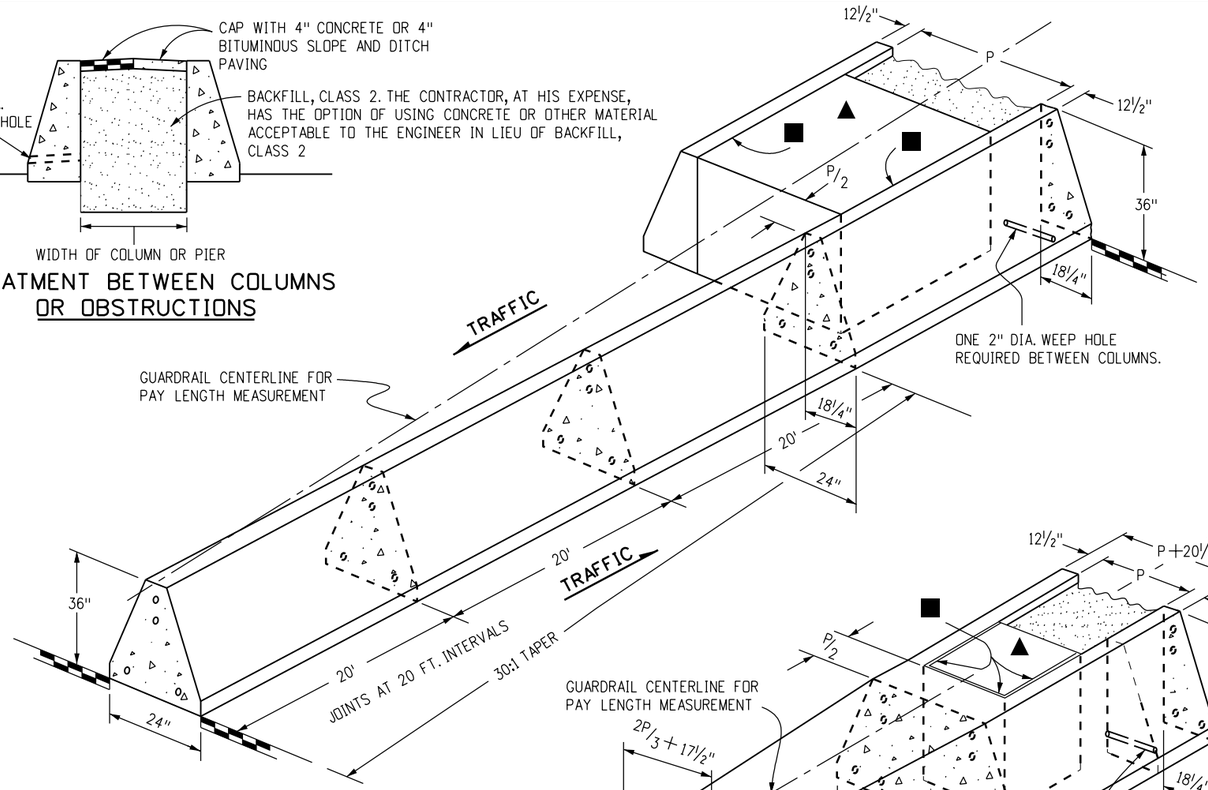

OBSTRUCTION WIDER THAN 3 FT.

■ ½" PREFORMED JOINT MATERIAL

▲ PIER COLUMN, SIGN SUPPORT FOOTING, CONCRETE WALL, OR SIMILAR OBSTRUCTIONS.

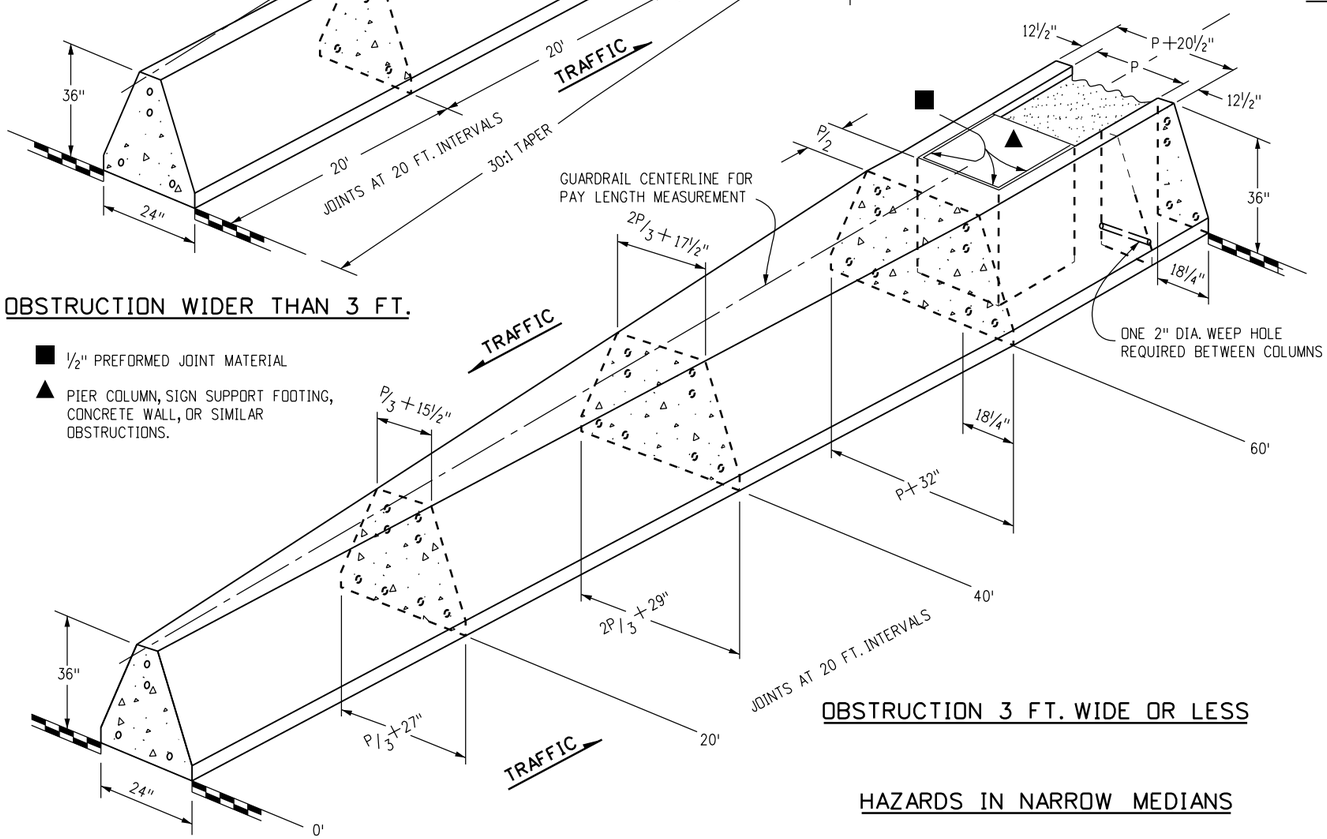

OBSTRUCTION 3 FT. WIDE OR LESS

HAZARDS IN NARROW MEDIANS

DESIGN SPEED (MPH)	SHY LINE OFFSET (FT.) *	FLARE RATE FOR BARRIER INSIDE SHY LINE	FLARE RATE FOR BARRIER OUTSIDE SHY LINE
80	12	30:1	20:1
75	10	30:1	20:1
70	9	30:1	20:1
60	8	26:1	18:1
55	7	24:1	16:1
50	6.5	21:1	14:1
45	6	18:1	12:1
40	5	16:1	10:1
30	4	13:1	8:1

* THE SHY LINE OFFSET IS MEASURED FROM THE EDGE OF THE TRAVELED WAY.

TABLE OF FLARE RATES FOR PERMANENT CONCRETE BARRIER

NOTES

1. THE MEDIAN IN THESE APPLICATIONS SHALL BE PAVED ON A SLOPE CONTINUED FROM THE ADJACENT PAVED SHOULDER OR A 10:1 OR FLATTER SLOPE.
2. THE PAY LENGTH FOR BARRIER ON BOTH SIDES OF AN OBSTRUCTION WILL BE DETERMINED BY ONE LINEAR MEASUREMENT ALONG THE GUARDRAIL CENTERLINE. THE BACKFILL AND CAP BETWEEN COLUMNS OR OBSTRUCTIONS WILL NOT BE MEASURED AND PAID FOR SEPARATELY BUT SHALL BE INCLUDED IN THE WORK.
3. GUARDRAIL BETWEEN COLUMNS OR OBSTRUCTIONS MAY BE STYLES CA OR CD AS SHOWN ON THE PLANS.
4. TYPE 9 IS A MASH TEST LEVEL 3 (TL-3) APPROVED CONCRETE BARRIER DESIGNED FOR REDIRECTION AND PROTECTION FROM MOST STANDARD ROADSIDE OBSTACLES. TO PROTECT PIERS AND OTHER STRUCTURAL BRIDGE SUPPORTS, A MASH TL-5 DESIGN MAY BE REQUIRED.

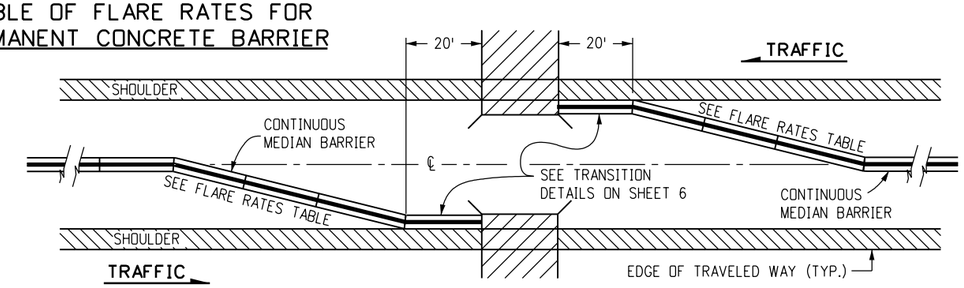

BRIDGE APPROACH

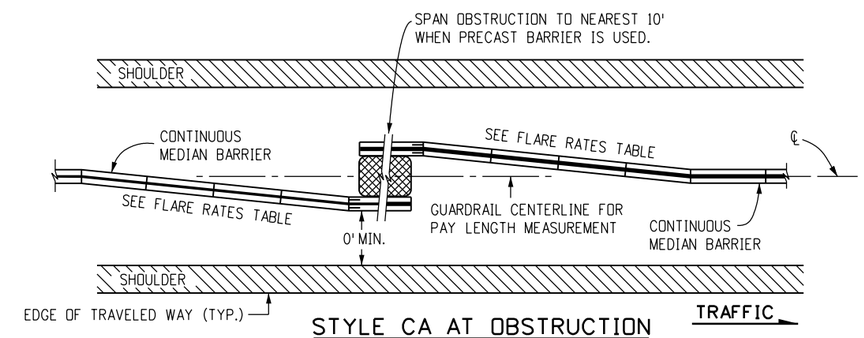

STYLE CA AT OBSTRUCTION

(OBSTRUCTION NOT SUITABLE FOR STYLE CD)

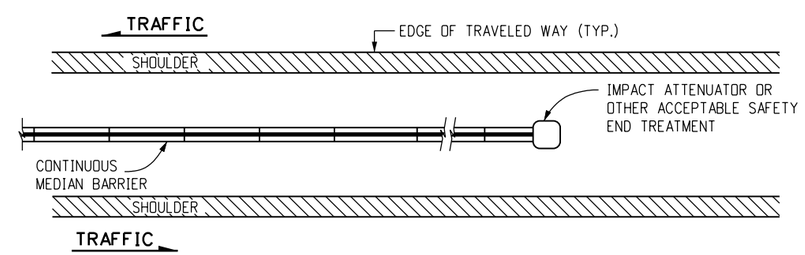

MEDIAN BARRIER END TREATMENT

Computer File Information		Sheet Revisions	
Creation Date: 07/31/19		Date:	Comments
Designer Initials: JBK	R-X	03/05/20	Added General Note 4.
Last Modification Date: 02/17/23	R-X		
Detailer Initials: LTA	R-X		
CAD Ver.: MicroStation V8 Scale: Not to Scale Units: English	R-X		

Colorado Department of Transportation
2829 West Howard Place
CDOT HQ, 3rd Floor
Denver, CO 80204
Phone: 303-757-9021 FAX: 303-757-9868
Construction Engineering Services JBK

GUARDRAIL TYPE 9 SINGLE SLOPE BARRIER

Issued by the Project Development Branch: July 31, 2019

STANDARD PLAN NO.
M-606-15
Standard Sheet No. 11 of 11
Project Sheet Number:

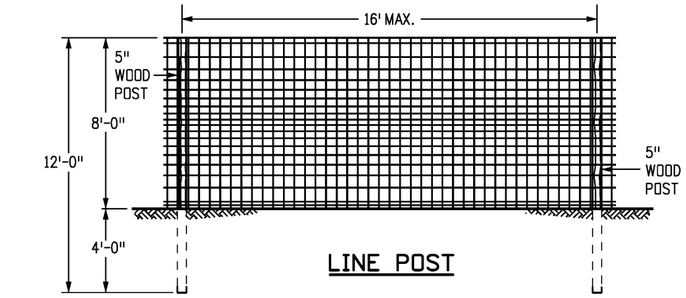

LINE POST

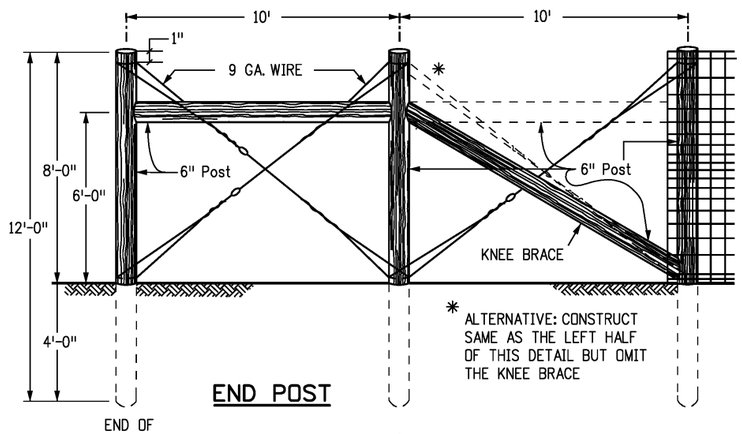

END POST

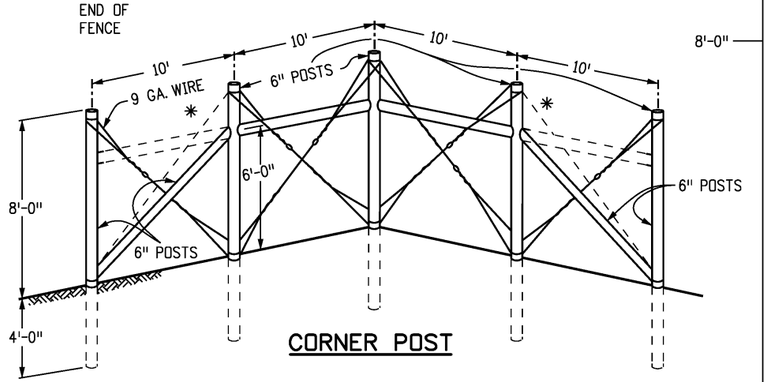

CORNER POST

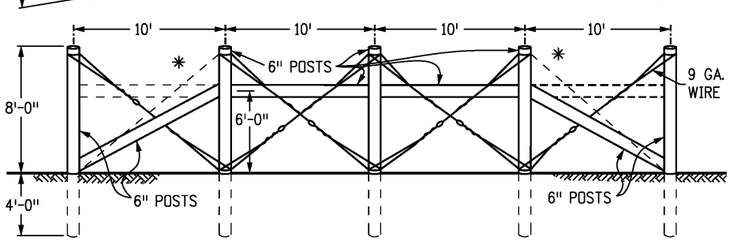

LINE BRACE POST

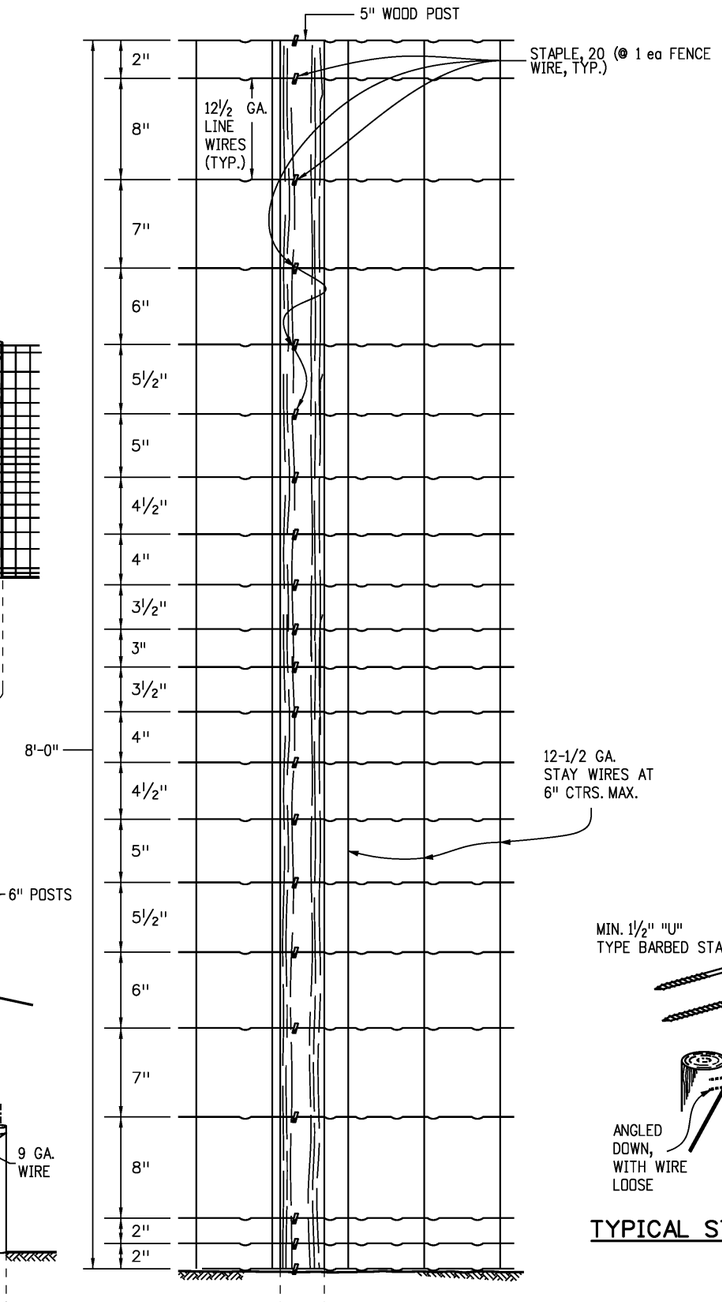

DEER FENCE WIRE FABRIC

GENERAL NOTES

1. AT EACH LOCATION WHERE AN ELECTRIC TRANSMISSION, DISTRIBUTION OR SECONDARY LINE CROSSES A BARRIER FENCE, THE CONTRACTOR SHALL FURNISH AND INSTALL A GROUND CONFORMING TO ARTICLE 250 OF THE NATIONAL ELECTRICAL CODE. THE GROUND ROD SHALL BE A MINIMUM DIAMETER OF ½ IN. AND 8 FT. IN LENGTH, AND DRIVEN AT LEAST 7½ FT. INTO THE GROUND. THE ROD SHALL BE CONNECTED TO EACH WIRE WITH A MINIMUM AWG NO. 8 STRANDED COPPER WIRE. GROUNDING WILL NOT BE PAID FOR SEPARATELY BUT SHALL BE INCLUDED IN THE WORK.
2. END POST, CORNER POST, AND LINE BRACE POST SHALL BE ASSEMBLED BY THE UNIT AND PAID FOR AS SUCH. ALL WORK AND MATERIAL ASSOCIATED WITH EACH ASSEMBLY, SHALL BE INCLUDED IN THE UNIT PRICE FOR THAT ASSEMBLY.
3. LINE BRACE POSTS SHALL BE SPACED AT 400 FT. INTERVALS, WHERE FENCING IS CONTINUOUS AND WHERE END, CORNER & LINE BRACE POSTS ARE NOT SPECIFIED.
4. ALL LINE POSTS SHALL BE 5 IN. MIN. DIAMETER AND 12 FT. LONG. ALL END, CORNER AND LINE BRACE POSTS SHALL BE 6 IN. MIN. DIAMETER AND 12 FT. LONG. ALL POSTS AND BRACES SHALL BE TREATED IN ACCORDANCE WITH SUBSECTION 710.07.
5. FENCE WIRE MAY BE PLACED ON EITHER THE ROAD SIDE OR THE FIELD SIDE OF POSTS, DEPENDING ON LOCAL CONDITIONS; i.e., ON CURVES, THE WIRE SHOULD BE PLACED ON THE SIDE WHICH WOULD RESULT IN THE LEAST AMOUNT OF TENSION ON THE STAPLES. THIS ALSO APPLIES WHERE WIND DRIFT OR OTHER CONDITIONS WOULD EXERT UNUSUAL PRESSURE AGAINST THE WIRE.
6. WHERE CONCRETE STRUCTURES ARE USED AS A DEER PASS, THE FENCE SHALL END AT EYEBOLTS IN WINGS OF THE STRUCTURE. EYEBOLTS IN FRESH CONCRETE SHALL BE MADE OF ½ IN. ROUND BARS AND EMBEDDED A MINIMUM OF 6 IN. WITH A HOOKED OR BENT END. IN EXISTING CONCRETE, THE ½ IN. ROUND BARS SHALL BE DEFORMED AND GROUTED INTO DRILLED HOLES. EYEBOLTS SHALL HAVE A MINIMUM OF 1 IN. INSIDE EYE DIAMETER AND SHALL BE FURNISHED AND INSTALLED BY THE CONTRACTOR. COST OF EYEBOLTS SHALL BE INCLUDED IN THE CONTRACT PRICE FOR FENCING.
7. WOVEN WIRE FENCE FABRIC SHALL CONFORM TO AASHTO M 279 (ASTM A 116). DESIGN NO. 2096-6-12½, GRADE 60, COATING TYPE ZA, COATING CLASS 80.
8. ALL FENCE WIRE TIES, BRACE WIRES, STAPLES AND OTHER WIRE APPURTENANCES SHALL BE GALVANIZED IN CONFORMANCE WITH AASHTO M 232.
9. THE CONTRACTOR SHALL RE-ESTABLISH DISTURBED OR DESTROYED SURVEY MONUMENTS TO THE APPROPRIATE ACCURACY IN ACCORDANCE WITH SUBSECTION 625.08 OF THE STANDARD SPECIFICATIONS.
10. CONTINUOUS LINE WIRE SHALL BE HIGH TENSILE (175 K MIN.). CONTINUOUS STAY WIRE SHALL BE MID-TENSILE (125 K MIN.). FIXED KNOT 13 GAUGE WIRE (60K MIN.) SHALL CONNECT LINE WIRE WITH THE VERTICAL STAY WIRE.
11. DEER GATE AND TOP BRACES SHALL BE PAINTED WITH GREEN PAINT ACCORDING TO SUBSECTION 708.03 AND COLOR NO. 14109 OF FEDERAL STANDARD 595B.

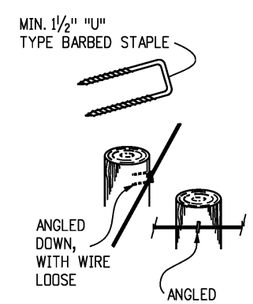

TYPICAL STAPLING

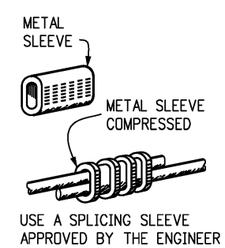

WIRE SPLICE

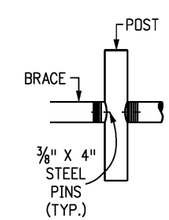

BORE A ⅜" X 2" HOLE IN EACH BRACE AND POST TO RECEIVE THE PINS. WRAP THE ENDS OF THE BRACES WITH SEVERAL TURNS OF 12-½ GAGE SMOOTH GALV. WIRE TO PREVENT SPLITTING. OR: NOTCH POST AND NAIL WITH 40d COMMON NAILS

CROSS BRACE DOWELING

Computer File Information	
Creation Date: 07/31/19	
Designer Initials: JBK	R-X
Last Modification Date: 07/13/20	R-X
Detailer Initials: LTA	R-X
CAD Ver.: MicroStation V8 Scale: Not to Scale Units: English	R-X

Sheet Revisions	
Date:	Comments

Colorado Department of Transportation
2829 West Howard Place
CDOT HQ, 3rd Floor
Denver, CO 80204
Phone: 303-757-9021 FAX: 303-757-9868
Project Development Branch JBK

DEER FENCE, GATES, AND GAME RAMPS

Issued by the Project Development Branch: July 31, 2019

STANDARD PLAN NO.
M-607-4
Standard Sheet No. 1 of 7
Project Sheet Number:

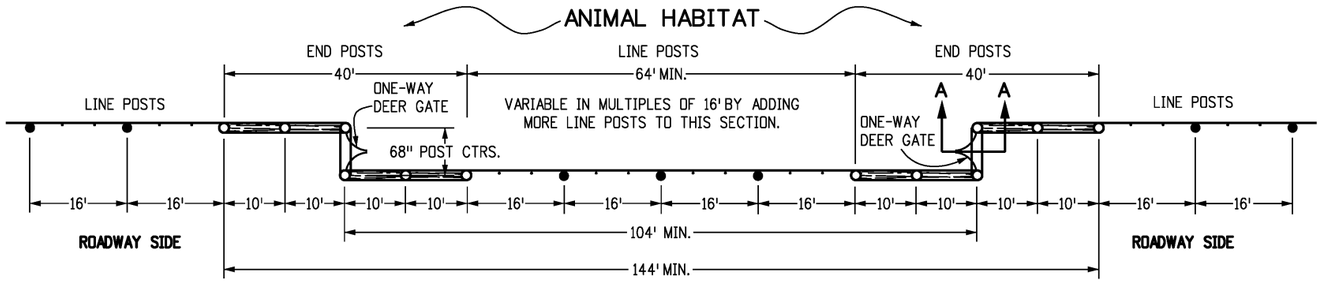

PLAN VIEW - TYPICAL DEER GATE INSTALLATION

LEGEND

- =LINE POST
- =WOODEN STAY
- =END POST
- =BRACE

NOTES

1. SIX IN. DOUBLE ACTING SPRING DOOR HINGE WITH FLAT BUTTON TIPS CUT IN TWO SHALL BE USED AS A SINGLE SWING HINGE AND BE PROVIDED WITH A GREASING NIPPLE AND WELDED TO SUPPORT PLATE.
2. TINES SHALL BE MOLDED IN ONE PIECE OF STEEL (AASHTO M 169, GRADE 1050), WITH NO WELDS ALLOWED.

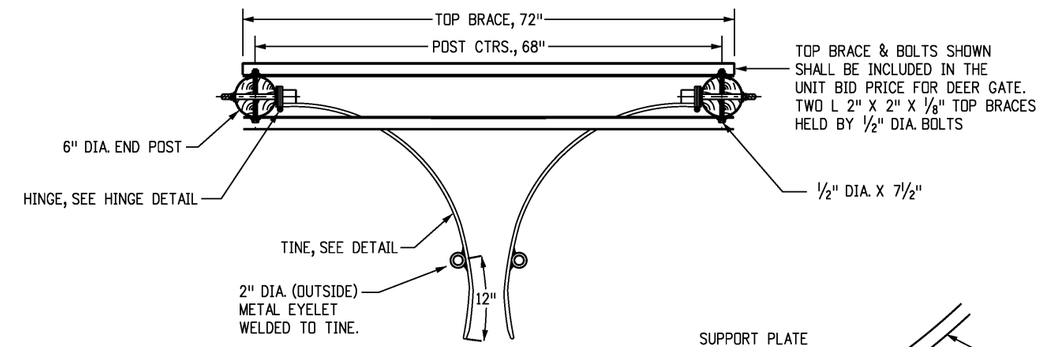

TOP VIEW - DEER GATE

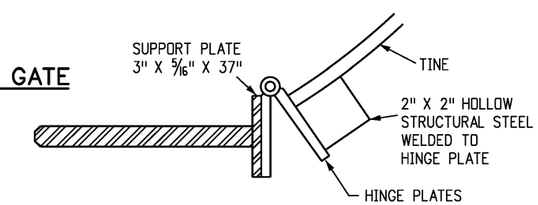

TYPICAL HINGE DETAIL

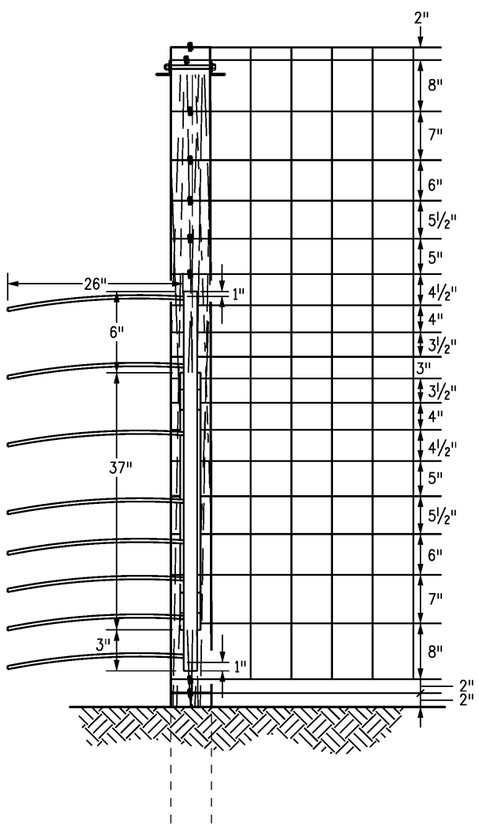

SECTION A-A

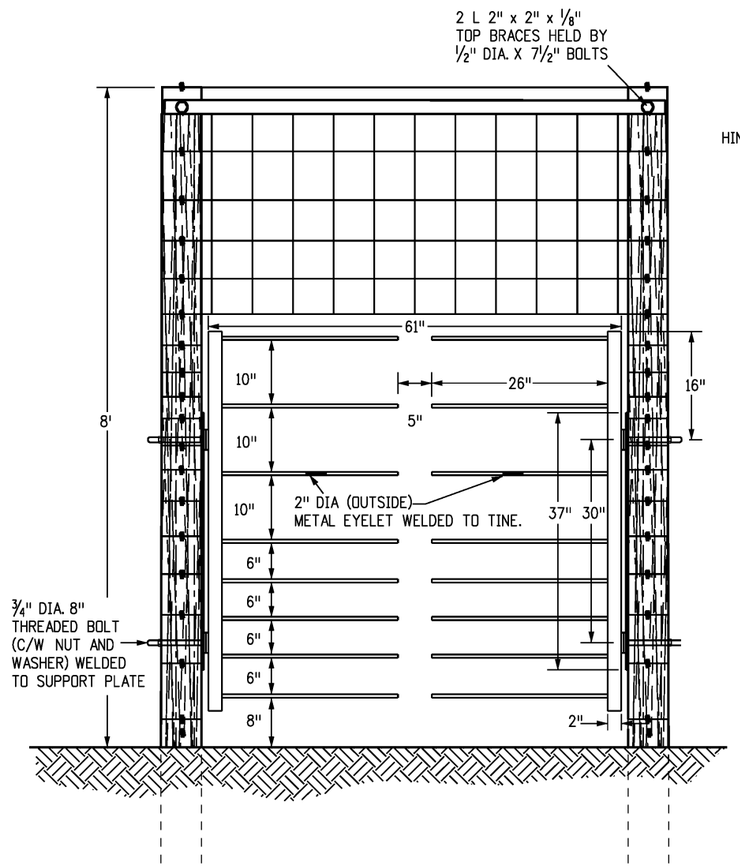

FRONT VIEW - DEER GATE

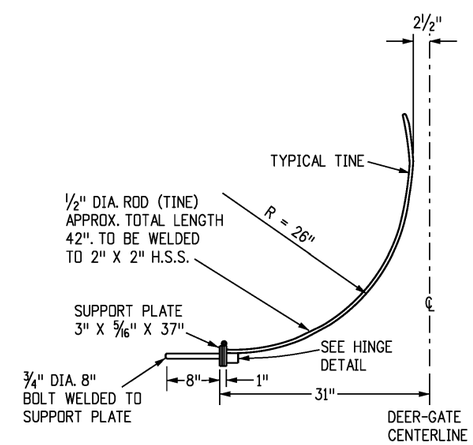

TYPICAL TINE DETAIL

Computer File Information		Sheet Revisions	
Creation Date: 07/31/19		Date:	Comments
Designer Initials: JBK	(R-X)		
Last Modification Date: 06/03/20	(R-X)		
Detailer Initials: LTA	(R-X)		
CAD Ver.: MicroStation V8 Scale: Not to Scale Units: English	(R-X)		

Colorado Department of Transportation
2829 West Howard Place
CDOT HQ, 3rd Floor
Denver, CO 80204
Phone: 303-757-9021 FAX: 303-757-9868
Project Development Branch JBK

DEER FENCE, GATES, AND GAME RAMPS

Issued by the Project Development Branch: July 31, 2019

STANDARD PLAN NO.
M-607-4
Standard Sheet No. 2 of 7
Project Sheet Number:

NOTES

1. LOCATIONS OF DEER FENCE IN THE CLEAR ZONE SHALL BE SHOWN IN THE PLANS.
2. POSTS WITHIN THE CLEAR ZONE SHALL BE DRILLED.
3. DRILL HOLES PERPENDICULAR TO THE ROADWAY.
4. KNEE BRACE SHALL BE OMITTED FROM ANY END POST OR CORNER POST WITHIN THE CLEAR ZONE.

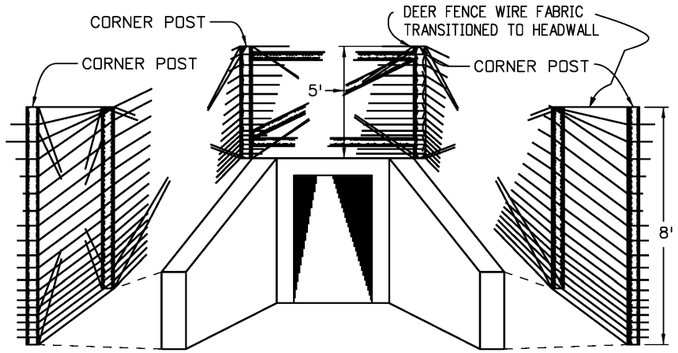

FENCE DEER OVER CONCRETE BOX CULVERT

FIVE FOOT POSTS AND WIRE FABRIC SHALL BE INSTALLED WHERE THE FENCE PASSES OVER A CBC AT LOCATIONS SHOWN IN THE PLANS. THIS WORK WILL BE PAID FOR AS FENCE DEER (SPECIAL).

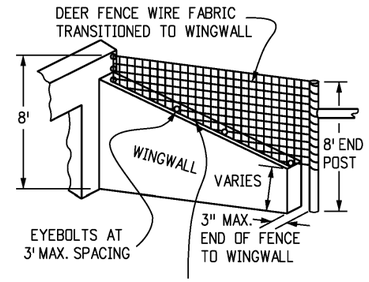

INSTALL 9 GA. WIRE THROUGH EYEBOLTS AND ATTACH FENCE FABRIC TO WIRE AT 1 FT. INTERVALS

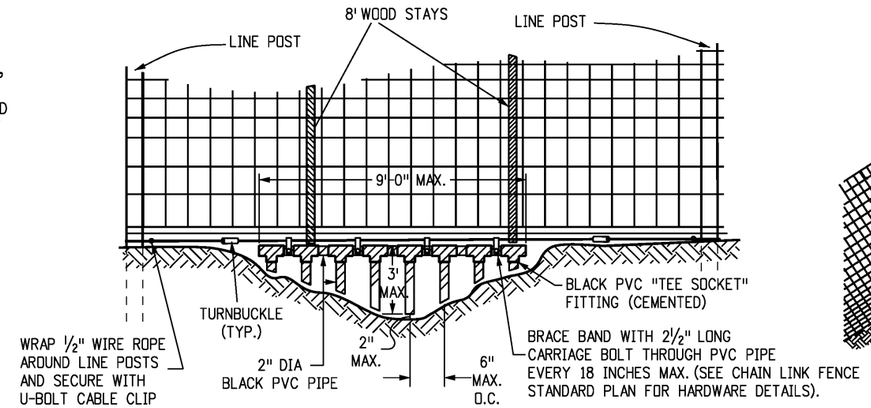

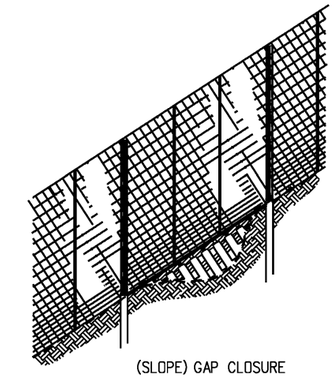

(SLOPE) GAP CLOSURE

GAP CLOSURE

USE THIS DETAIL TO CLOSE ALL GAPS BEWTEEN 6 INCHES AND 3 FEET.
GAP CLOSURES SHALL BE INCLUDED IN THE PRICE OF THE FENCE AND NOT BE PAID FOR SEPARATELY.

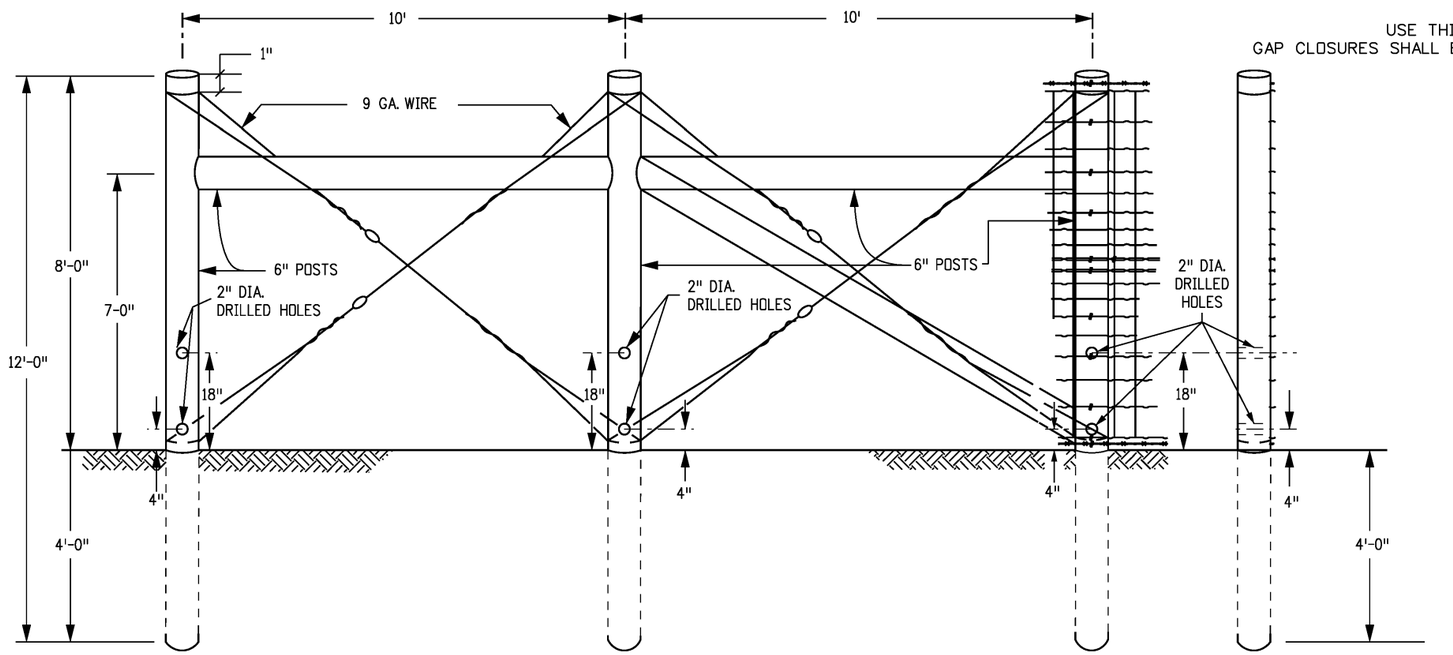

END POST AND CORNER POST

SIDE VIEW

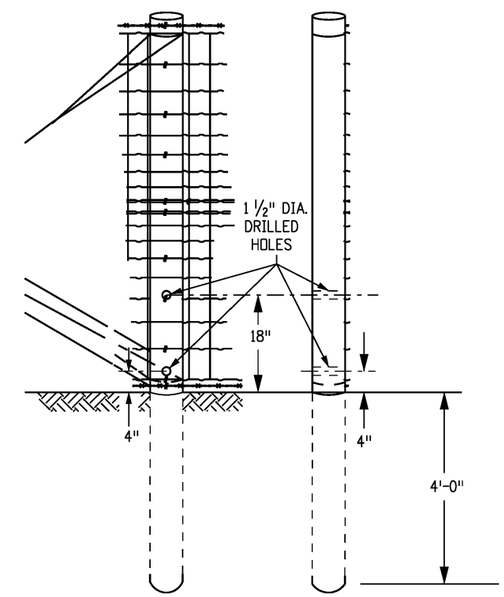

FRONT VIEW SIDE VIEW
5 IN. LINE POST

MODIFIED FOR PLACEMENT WITHIN ROADWAY CLEAR ZONE

Computer File Information		Sheet Revisions	
Creation Date: 07/31/19		Date:	Comments
Designer Initials: JBK	(R-X)		
Last Modification Date: 07/13/20	(R-X)		
Detailer Initials: LTA	(R-X)		
CAD Ver.: MicroStation V8 Scale: Not to Scale Units: English	(R-X)		

Colorado Department of Transportation
2829 West Howard Place
CDOT HQ, 3rd Floor
Denver, CO 80204
Phone: 303-757-9021 FAX: 303-757-9868
Project Development Branch JBK

DEER FENCE, GATES, AND GAME RAMPS

Issued by the Project Development Branch: July 31, 2019

STANDARD PLAN NO.
M-607-4
Standard Sheet No. 3 of 7
Project Sheet Number:

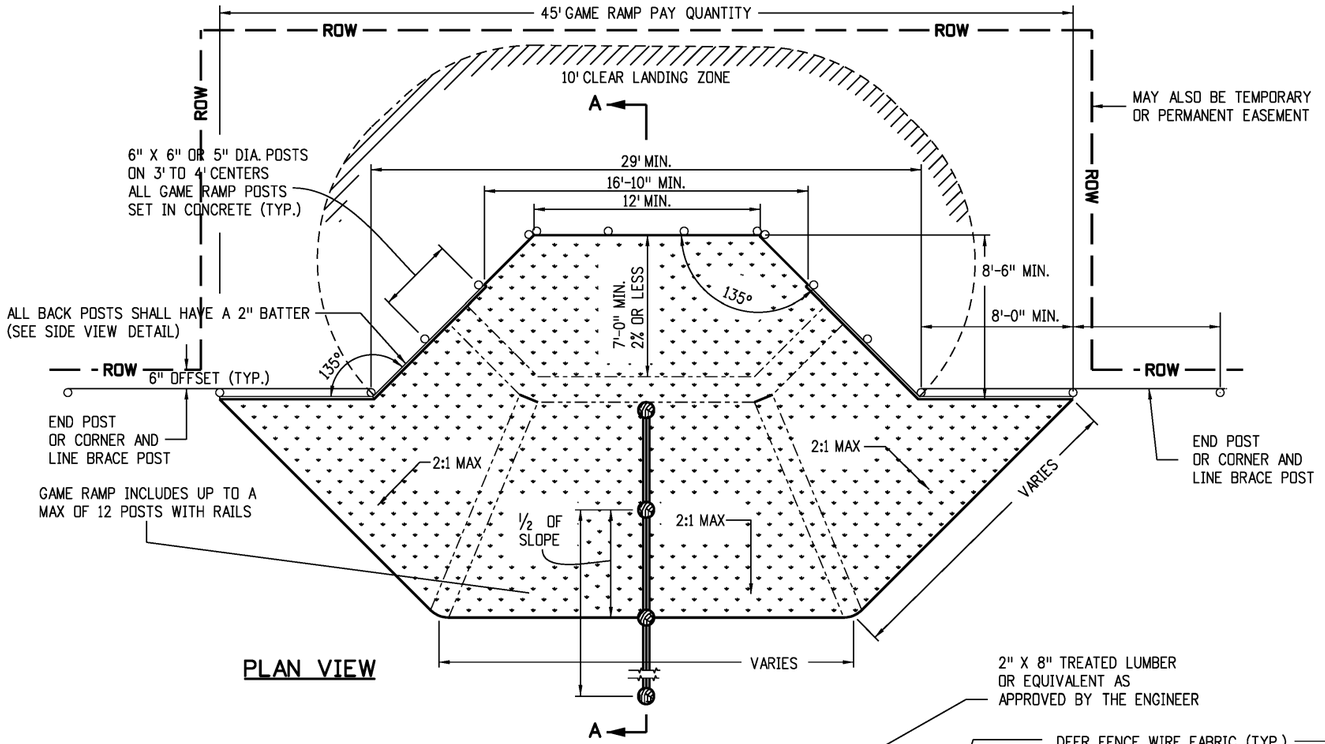

PLAN VIEW

NOTES

1. THE LANDING ZONE SHALL BE FLAT, STABLE, AND EARTHEN. THE AREA SHALL BE VOID OF OBJECTS THAT MAY HINDER OR ENDANGER WILDLIFE. THE ENGINEER MAY ADJUST THE GAME RAMP LOCATION AS NEEDED.
2. THERE SHALL BE NO DISTURBANCE BEYOND THE ROW OR TEMPORARY/PERMANANT EASETMENTS.
3. FILL MATERIAL SHALL BE STRUCTURE BACKFILL (CLASS 2) AND MEET THE REQUIREMENTS OF SECTION 206 WITH A MINIMUM COMPACTION OF 90%.
4. FOUR INCHES OF TOPSOIL SHALL BE PLACED IN ACCORDANCE WITH SECTION 207.
5. FINISHED HEIGHT OF BACKFILL/TOPSOIL SHALL BE 2" ABOVE LUMBER.
6. SEEDING SHALL BE COMPLETED AFTER THE ENGINEER APPROVES GRADING.
7. SEE THE STORMWATER MANAGEMENT PLAN FOR THE SEEDING PLAN.
8. GAME RAMP IS PAID PER REVISION OF SECTION 607, FENCES.

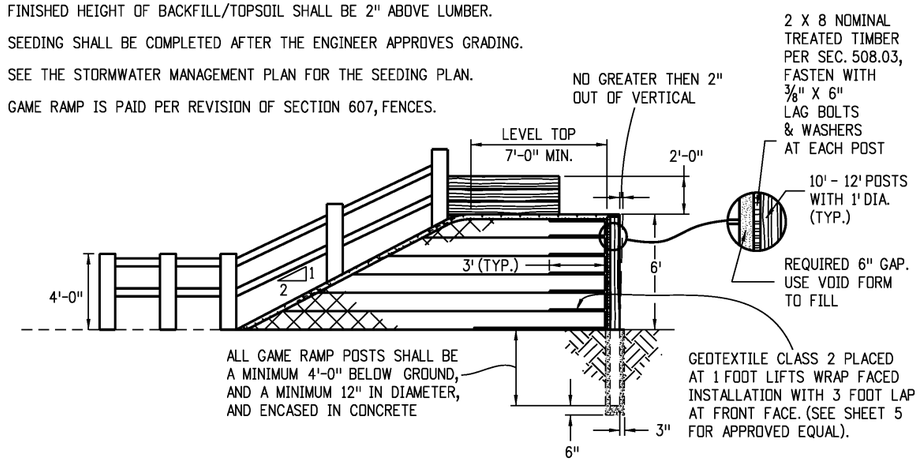

SECTION A-A

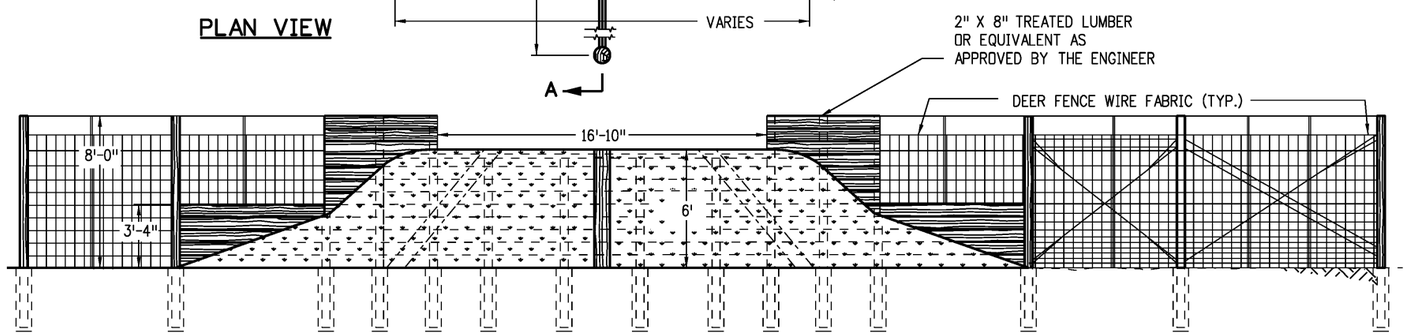

FRONT ELEVATION VIEW

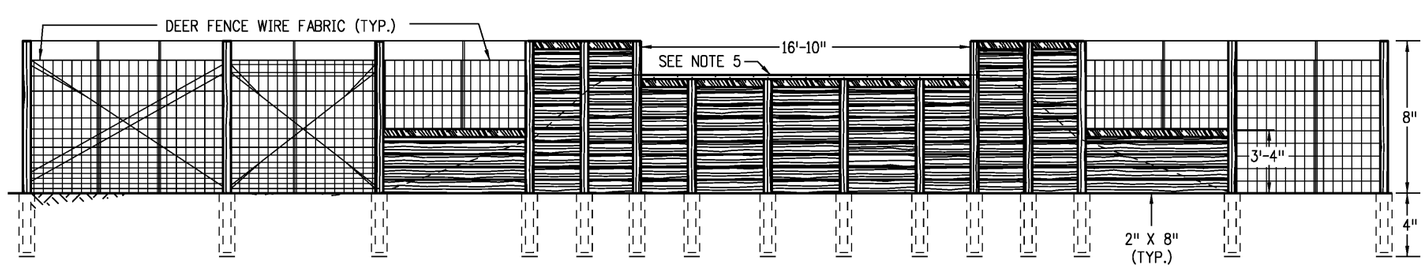

REAR ELEVATION VIEW

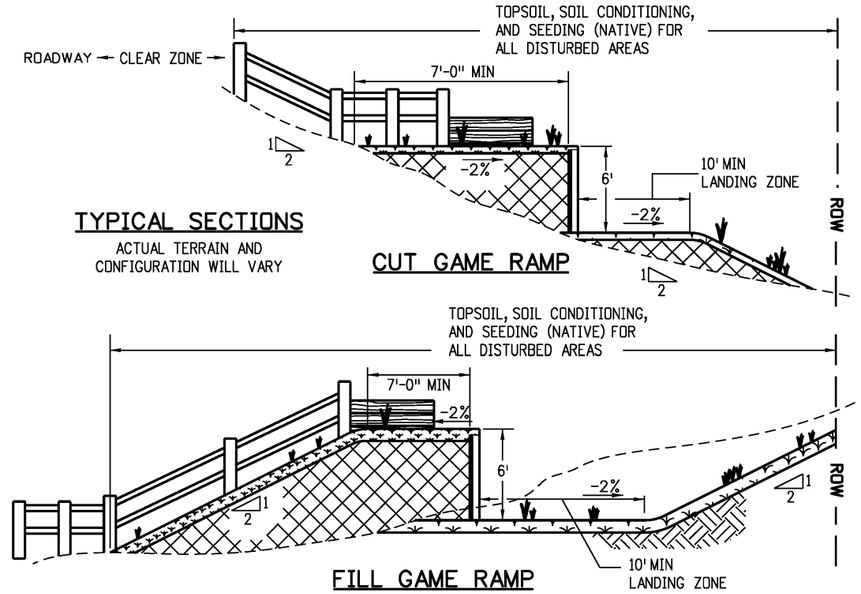

TYPICAL SECTIONS

ACTUAL TERRAIN AND CONFIGURATION WILL VARY

CUT GAME RAMP

FILL GAME RAMP

Computer File Information		Sheet Revisions	
Creation Date: 07/31/19		Date:	Comments
Designer Initials: JBK	(R-X)		
Last Modification Date: 06/03/20	(R-X)		
Detailer Initials: LTA	(R-X)		
CAD Ver.: MicroStation V8 Scale: Not to Scale Units: English	(R-X)		

Colorado Department of Transportation
2829 West Howard Place
CDOT HQ, 3rd Floor
Denver, CO 80204
Phone: 303-757-9021 FAX: 303-757-9868
Project Development Branch JBK

DEER FENCE, GATES, AND GAME RAMPS

Issued by the Project Development Branch: July 31, 2019

STANDARD PLAN NO.
M-607-4
Standard Sheet No. 4 of 7
Project Sheet Number:

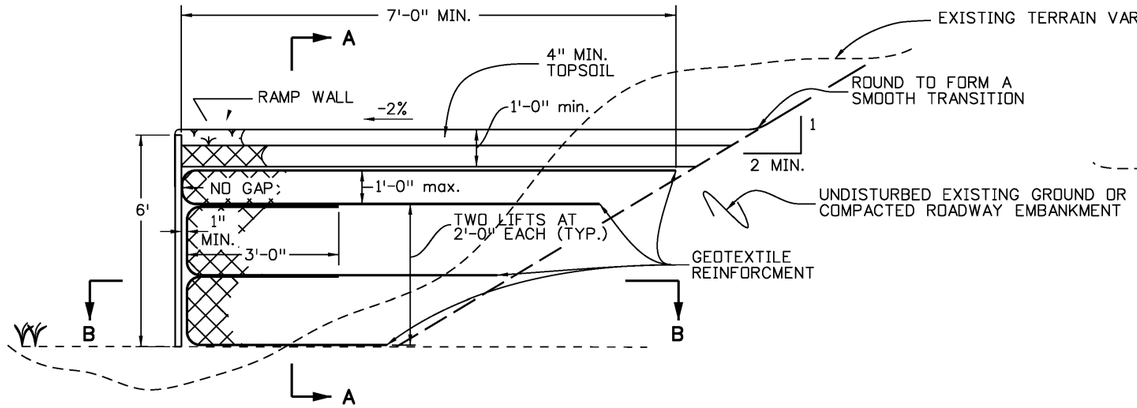

CUT SECTION PERPENDICULAR TO GAME RAMP

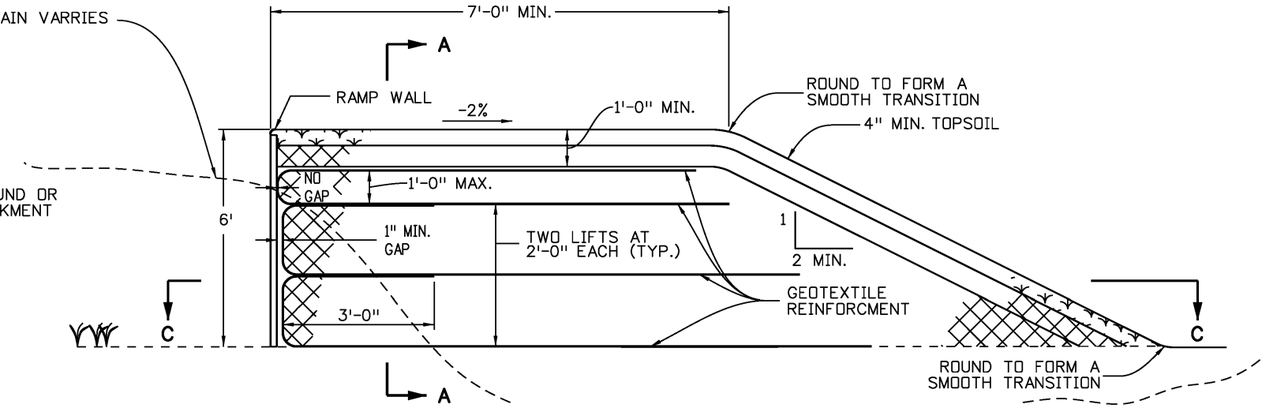

FILL SECTION PERPENDICULAR TO GAME RAMP

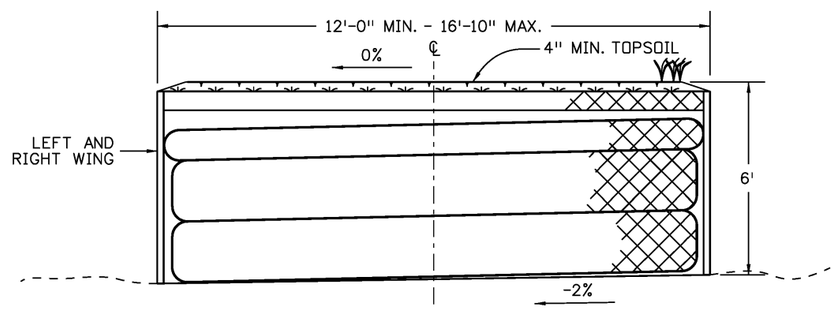

SECTION A-A

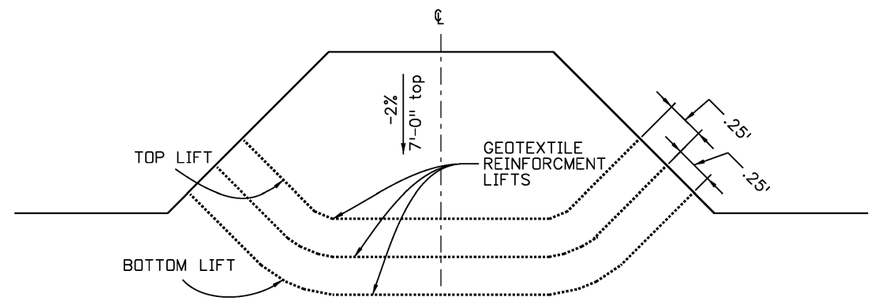

FILL SECTION C-C

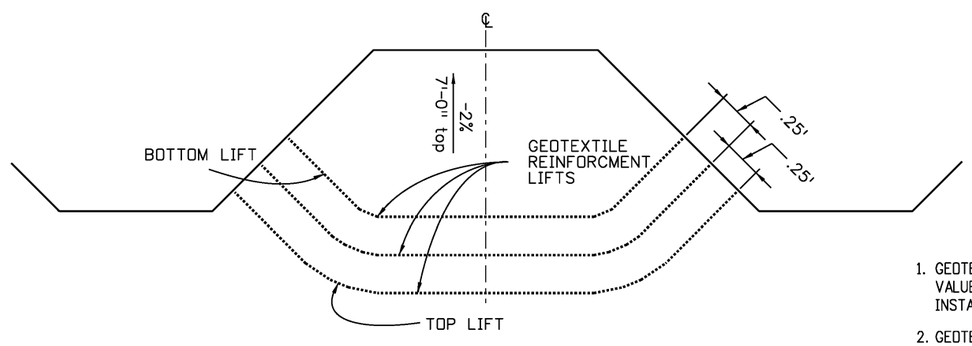

CUT SECTION B-B

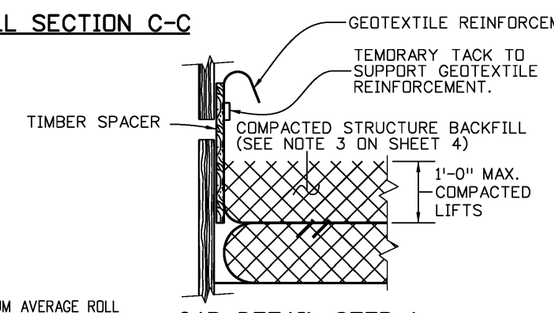

GAP DETAIL STEP 1

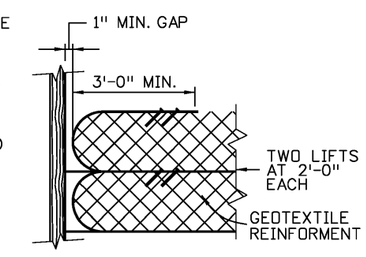

GAP DETAIL STEP 2

NOTES

1. GEOTEXTILE REINFORCEMENT SHALL BE WOVEN FABRIC WITH A MINIMUM AVERAGE ROLL VALUE OF 4800 LB/FT FOR INSTALLATIONS WITH A GAP AND 2400 LB/FT FOR INSTALLATIONS WITHOUT A GAP BASED ON ASTM D4595.
2. GEOTEXTILE REINFORCEMENT SHALL BE PLACED BY ALTERNATING MACHINE DIRECTION (MD) WITH CROSS MACHINE DIRECTION (XD) FROM LAYER TO LAYER.
3. THE GEOTEXTILE REINFORCEMENT WRAP AT BACK FACE OF GAME RAMP SHALL BE PULLED BACK SLACK FREE WITH ITS END ANCHORED TO SOIL UNDERNEATH WITH STAPLES OR PINS.
4. MINIMUM SPLICE OF ALL GEOTEXTILE SHALL CONSIST OF 1 FOOT OF OVERLAP.
5. GEOTEXTILE REINFORCEMENT WRAP AT BACK FACE OF GAME RAMP WALL SHALL BE TEMPORARILY HUNG WITH A SPACER BOARD AND TACK STRIP. AFTER REACHING A TOTAL OF 2'-0" COMPACTED LIFT, THE TACK STRIP SHALL BE REMOVED AND GEOTEXTILE REINFORCEMENT SHALL BE PULLED BACK SLACK FREE WITH ITS END ANCHORED TO SOIL UNDERNEATH WITH STAPLE OR PINS BEFORE THE SPACER BOARD IS PULLED.
6. DO NOT USE SPACER FOR THE TOP LIFT (FINAL LIFT). TOP LIFT SHALL ABUT THE GAME RAMP WALL.

Computer File Information		Sheet Revisions	
Creation Date: 07/31/19		Date:	Comments
Designer Initials: JBK	(R-X)		
Last Modification Date: 07/13/20	(R-X)		
Detailer Initials: LTA	(R-X)		
CAD Ver.: MicroStation V8 Scale: Not to Scale Units: English	(R-X)		

Colorado Department of Transportation
2829 West Howard Place
CDOT HQ, 3rd Floor
Denver, CO 80204
Phone: 303-757-9021 FAX: 303-757-9868
Project Development Branch JBK

DEER FENCE, GATES, AND GAME RAMPS

Issued by the Project Development Branch: July 31, 2019

STANDARD PLAN NO.
M-607-4
Standard Sheet No. 5 of 7
Project Sheet Number:

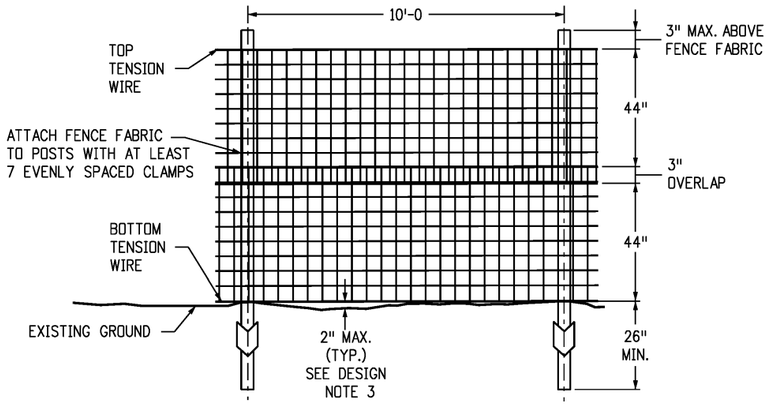

ALTERNATIVE DEER FENCE

DESIGN NOTES:

1. INSTALL A 4 FT. GATE ADJACENT TO ANIMAL CROSSING STRUCTURES.
2. A 3 INCH MIN. OVERLAP IS REQUIRED PLUS TIES OR CLAMPS TOGETHER EVERY 18 INCHES USING HOG RINGS OR OTHER TYPES OF TIES OR CLAMPS.
3. PLACE A BOTTOM TENSION WIRE AND FENCE FABRIC AT EXISTING GROUND AT POSTS AND WITHIN 2 INCHES OF EXISTING GROUND BETWEEN POSTS.
4. TIE OR CLAMP BOTTOM AND TOP TENSION WIRE TO FENCE FABRICS EVERY 24 INCHES USING HOG RINGS OR OTHER TYPES OF TIES OR CLAMPS.
5. A SINGLE FENCE FABRIC MAY BE USED IF IT MEETS OVERALL MINIMUM DIMENSIONS.

NOTES

1. SET GATE POST, BRACE POST, END POST, CORNER POST, AND POST BRACE IN CLASS "B" CONCRETE. SEE SHEET 7 FOR CORNER BRACE.
2. LINE POSTS
   A. "T", "Y", OR "U" STEEL CHANNEL SECTIONS, MINIMUM WEIGHT 1.33 LB/FT OF LENGTH OR STEEL PIPE, 1.900 INCH OUTSIDE DIAMETER SCHEDULE 40 PIPE, WEIGHT 2.72 LB/FT OF LENGTH OR HIGH TENSILE TRIPLE COATED STEEL PIPE, WEIGHT 2.23 LB/FT OF LENGTH.
   B. LINE POSTS ARE 10 FEET IN LENGTH.
3. BRACE POSTS, CORNER POSTS, AND END POSTS
   A. STEEL PIPE 2.375 INCH OUTSIDE DIAMETER, WEIGHT 3.65 LB/FT OR HIGH TENSILE TRIPLE COATED STEEL, 2.375 INCH OUTSIDE DIAMETER WEIGHT 3.11 LB/FT.
4. GATE POSTS
   A. GATE WIDTHS 6 FEET AND LESS USE STEEL PIPE WITH OUTSIDE DIAMETER 2.375 INCH AND WEIGHT 3.65 LB/FT OR HIGH TENSILE TRIPLE COATED STEEL, 2.375 INCH OUTSIDE DIAMETER WEIGHT 3.11 LB/FT.
   B. GATE WIDTHS GREATER THAN 6 FEET USE STEEL PIPE WITH OUTSIDE DIAMETER 3.50 INCH AND WEIGHT 7.58 LB/FT.
5. POST BRACES TO MATCH POST TYPE AND SIZE.
6. USE CORNER BRACE ON FENCE LINE DEVIATIONS GREATER THAN A 17 DEGREE ANGLE. SEE SHEET 7 FOR CORNER BRACE DETAILS.
7. TERMINATE FENCE FABRIC AND BARBED WIRE AT EACH CORNER POST.
8. USE 10 FEET SPACING IN AREAS OF FARM ANIMAL USE OR AS SHOWN.
9. GATE FRAME USE STEEL PIPE 1.875 INCH OUTSIDE DIAMETER WITH WEIGHT OF 2.72 LB/FT.
10. WHERE DOUBLE GATES ARE INSTALLED PROVIDE AT LEAST A 4 INCH GAP BETWEEN GATE FRAMES TO ALLOW FOR LATCH.
11. THE GALVANIZED POSTS SHALL BE STAINED FOREST SERVICE BROWN WHEN REQUIRED PER THE AEROSPACE MATERIAL SPECIFICATION STANDARD AMS 595A 20059.

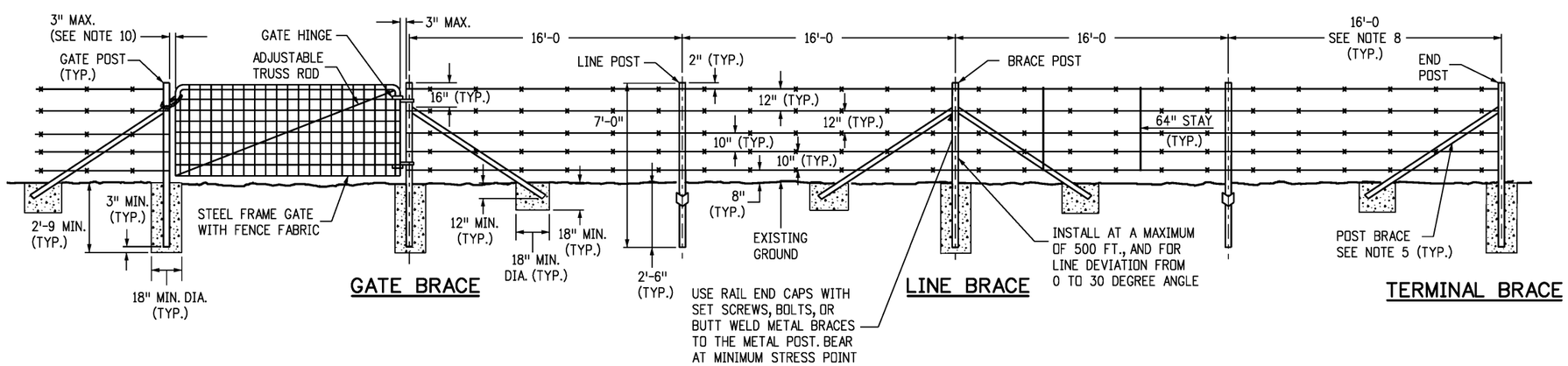

ALTERNATIVE DEER FENCE INSTALLATION WITH ONLY METAL POSTS

Computer File Information		Sheet Revisions	
Creation Date: 07/31/19		Date:	Comments
Designer Initials: JBK	R-X	07/13/20	Added this sheet.
Last Modification Date: 07/13/20	R-X		
Detailer Initials: LTA	R-X		
CAD Ver.: MicroStation V8 Scale: Not to Scale Units: English	R-X		

Colorado Department of Transportation
2829 West Howard Place
CDOT HQ, 3rd Floor
Denver, CO 80204
Phone: 303-757-9021 FAX: 303-757-9868
Project Development Branch JBK

DEER FENCE, GATES, AND GAME RAMPS

Issued by the Project Development Branch: July 31, 2019

STANDARD PLAN NO.
M-607-4
Standard Sheet No. 6 of 7
Project Sheet Number:

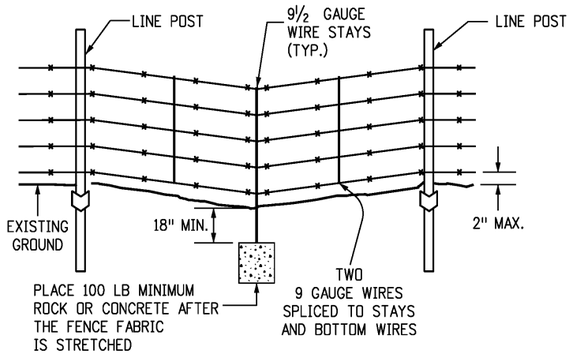

TYPICAL SAG SECTION

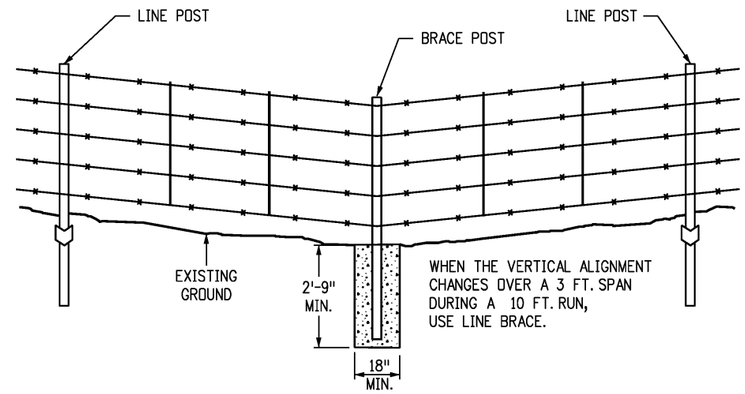

TYPICAL VERTICAL ALIGNMENT CHANGE

INSTALLATION WITH METAL POSTS (TYP.)

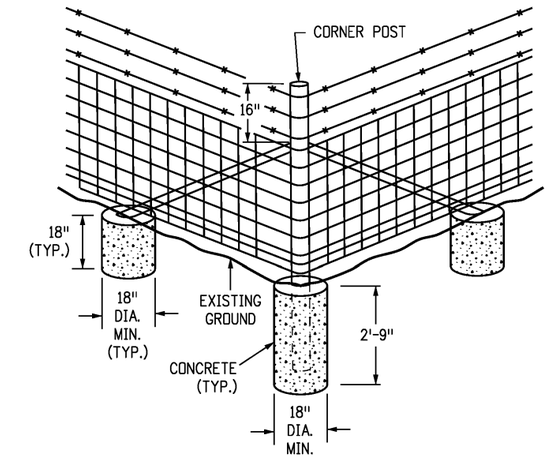

CORNER BRACE

SEE NOTE 6 ON SHEET 6

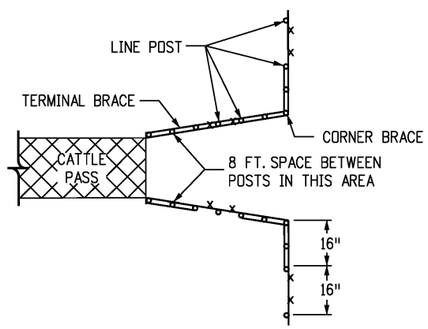

CATTLE PASS FENCE DETAIL

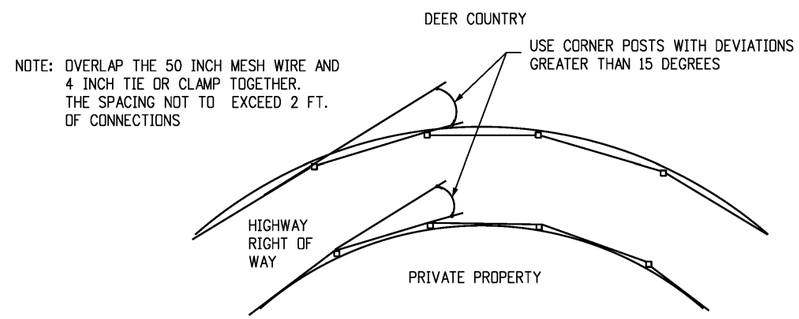

DEER BARRIER ON CURVES

SEE NOTE 6 ON SHEET 6

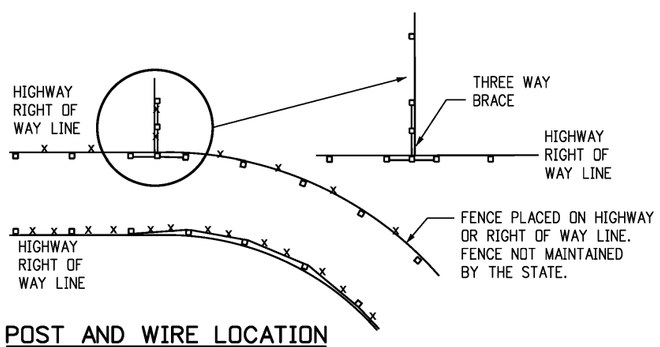

POST AND WIRE LOCATION

PLACE WIRE TO PULL AGAINST POST

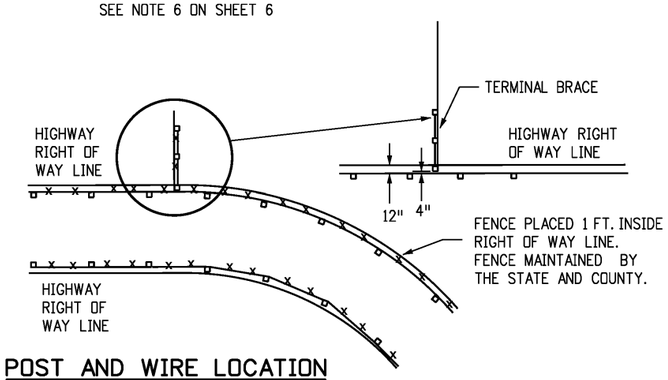

POST AND WIRE LOCATION

PLACE WIRE TO PULL AGAINST POST

ALTERNATIVE DEER FENCE INSTALLATION WITH ONLY METAL POSTS

Computer File Information		Sheet Revisions	
Creation Date: 07/31/19		Date:	Comments
Designer Initials: JBK	R-X	07/13/20	Added this sheet.
Last Modification Date: 07/13/20	R-X		
Detailer Initials: LTA	R-X		
CAD Ver.: MicroStation V8 Scale: Not to Scale Units: English	R-X		

Colorado Department of Transportation
2829 West Howard Place
CDOT HQ, 3rd Floor
Denver, CO 80204
Phone: 303-757-9021 FAX: 303-757-9868
Project Development Branch JBK

DEER FENCE, GATES, AND GAME RAMPS

Issued by the Project Development Branch: July 31, 2019

STANDARD PLAN NO.
M-607-4
Standard Sheet No. 7 of 7
Project Sheet Number: