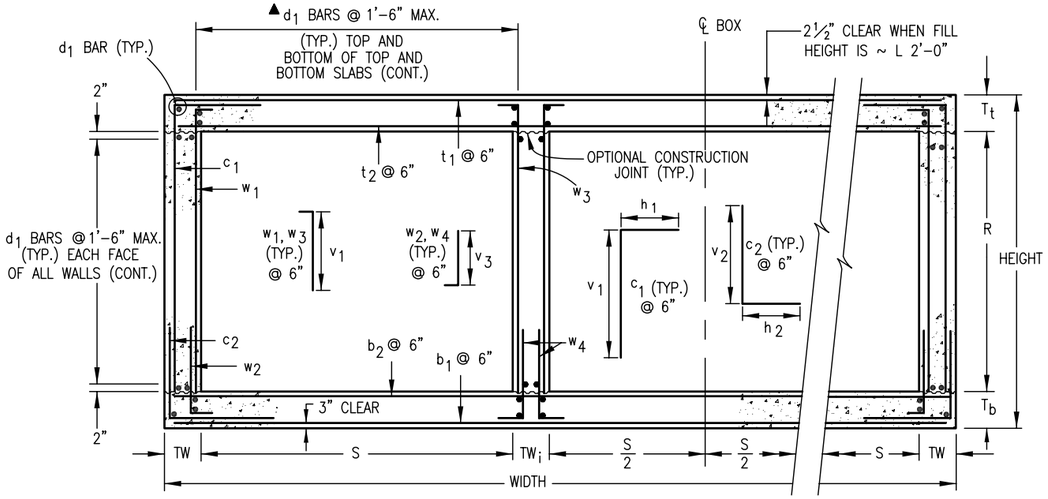

SECTION B–B

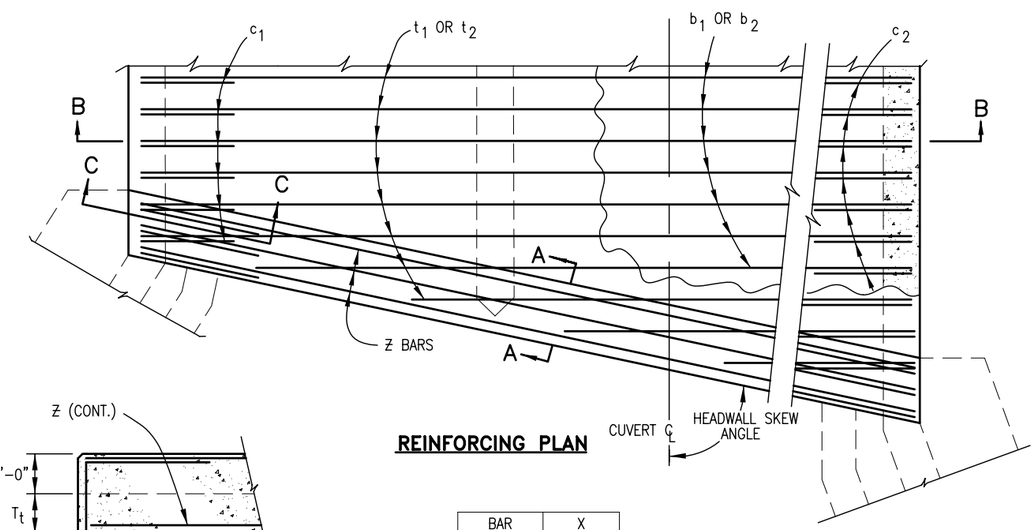

REINFORCING PLAN

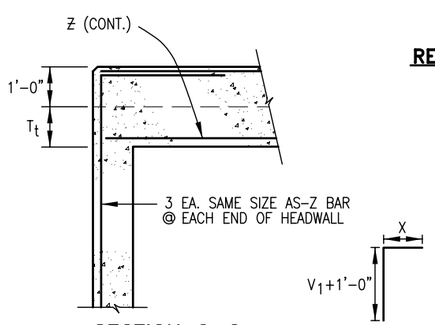

BAR SIZE (#)	X (FT.-IN.)
4	1–9
5	2–2
6	2–7
7	3–1
8	4–0
9	5–1
10	6–5
11	7–11

SECTION C–C

HEADWALL CORNER REINFORCING DETAIL

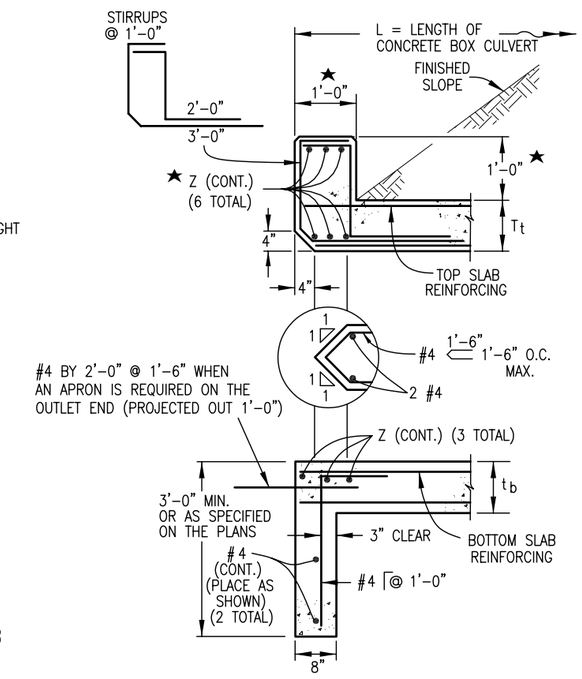

SECTION A–A

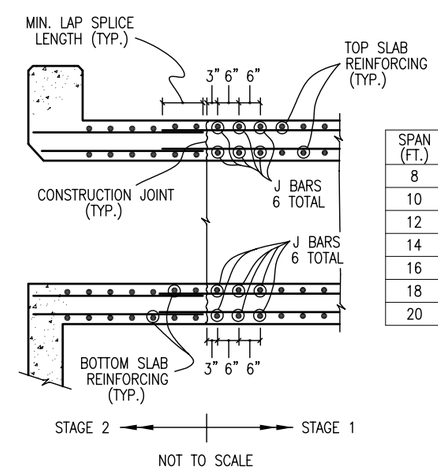

SPAN (FT.)	J BAR SIZE (#)
8	6
10	7
12	7
14	8
16	9
18	9
20	10

CONSTRUCTION JOINT DETAIL FOR STAGED CONSTRUCTION

NOTE: THIS DETAIL IS FOR CONSTRUCTION JOINTS PERPENDICULAR TO THE ℄ OF THE BOX ONLY.

GENERAL NOTES

1. ALL CONCRETE SHALL BE CLASS D (BOX CULVERT).
2. ALL CONSTRUCTION JOINTS SHALL BE THOROUGHLY CLEANED BEFORE FRESH CONCRETE IS PLACED.
3. CONSTRUCTION JOINTS NOT SHOWN ON THE PLANS MAY BE CONSTRUCTED ONLY IF APPROVED BY THE ENGINEER.
4. THE CONTRACTOR SHALL MAINTAIN THE STABILITY OF THE STRUCTURE DURING CONSTRUCTION.
5. STRUCTURE EXCAVATION AND BACKFILL SHALL BE IN ACCORDANCE WITH STANDARD PLAN M–206–1.
6. FOR ANY CULVERT SPAN 20 FT. OR GREATER, A FOUNDATION INVESTIGATION AND REPORT ARE REQUIRED.
7. BACKFILL SHALL NOT BEGIN UNTIL TOP SLAB HAS REACHED DESIGN STRENGTH, f'_c.
8. SPLICE QUANTITIES FOR LONGITUDINAL AND TRANSVERSE BARS ARE NOT INCLUDED.
9. REINFORCING STEEL SHALL BE GRADE 60.
10. THE MINIMUM LAP SPLICE LENGTH FOR EPOXY COATED REINFORCING BARS SHALL BE:

BAR SIZE:	#4	#5	#6	#7	#8	#9	#10	#11
SPLICE LENGTH:	1'–3"	1'–6"	1'–10"	2'–2"	3'–8"	4'–8"	5'–11"	7'–3"

THE MINIMUM LAP SPLICE LENGTH FOR BLACK REINFORCING BARS SHALL BE:

BAR SIZE:	#4	#5	#6	#7	#8	#9	#10	#11
SPLICE LENGTH:	1'–0"	1'–4"	1'–7"	1'–10"	2'–5"	3'–1"	3'–11"	4'–10"

11. ALL DIMENSIONS ARE PERPENDICULAR TO THE CENTERLINE OF THE BOX.
12. WINGWALLS SHALL BE TIED TO CONCRETE BOX CULVERT IN ACCORDANCE WITH STANDARD PLAN M–601–20.
13. ALL TRANSVERSE REINFORCING SHALL BE NORMAL TO THE CENTERLINE OF THE BOX.
14. FILL HEIGHT IS THE DISTANCE MEASURED FROM TOP OF TOP SLAB TO TOP OF PAVEMENT.
15. ALL EXPOSED CONCRETE CORNERS SHALL BE CHAMFERED ¾ IN.

▲ WHEN THE FILL HEIGHT IS LESS THAN OR EQUAL TO 2 FT., THE SPACING OF THE d_1 BARS IN THE BOTTOM OF THE TOP SLAB SHALL BE 6 IN. OR LESS. USE THE FOLLOWING EQUATION TO CALCULATE THE ADDITIONAL REINFORCING QUANTITY. WHERE S IS IN FEET:

$$\text{ADDED REINFORCING, LBS./LIN FT.} = 3 \times \left(\frac{S}{0.5} - \frac{S}{1.5}\right) \times 0.668 = 2.672\ S$$

DESIGN DATA: 16TH EDITION OF THE AASHTO STANDARD SPECIFICATIONS FOR HIGHWAY BRIDGES

SERVICE LOAD DESIGN METHOD

UNIT STRESSES: f_s = 24,000 psi., f_y = 60,000 psi., f_c = 1,800 psi., f'_c = 4,500 psi., n = 8

LOADING DATA:

LIVE LOAD = AASHTO, HS 20–44 AND ALTERNATE MILITARY LOADING

DEAD LOAD CASE 1: VERTICAL EARTH LOAD = 120 LBS./CU. FT.
HORIZONTAL EARTH LOAD = 30 LBS./CU.FT.

DEAD LOAD CASE 2: VERTICAL EARTH LOAD = 120 LBS./CU. FT.
HORIZONTAL EARTH LOAD = 60 LBS./CU. FT.

FUTURE HMA OVERLAY = 48 LBS./SQ. FT. BASED ON 4 IN. THICKNESS

LIVE LOAD SURCHARGE ON EXTERIOR WALLS = 2 FT. OF EARTH

★ IF HEADWALL MOUNT GUARDRAIL IS USED (SEE STANDARD PLAN M–606–1, SHEET 16):

- ALL REINFORCING STEEL SHALL BE ACCORDING TO THIS BOX CULVERT PLAN.
- ANY ADDITIONAL STIRRUP LENGTH WILL NOT BE MEASURED AND PAID FOR SEPARATELY BUT SHALL BE INCLUDED IN THE WORK.
- HEADWALL DIMENSION AND CONCRETE QUANTITY SHALL BE ACCORDING TO STANDARD PLAN M–606–1, SHEET 16.
- POST ANCHORS SHALL BE PROVIDED ACCORDING TO STANDARD PLAN M–606–1, SHEET 16.
- POST ANCHORS AND CONCRETE FOR HEADWALL MOUNT OF GUARDRAIL WILL NOT BE MEASURED AND PAID FOR SEPARATELY BUT SHALL BE INCLUDED IN THE WORK.
- POST ANCHORS WHEN REQUIRED AND ENCASED IN HEADWALL CONCRETE, SHALL CONFORM TO ASTM A 36 OR AASHTO M 169 STEEL.

Computer File Information	
Creation Date: 07/04/06	Initials: SJR
Last Modification Date: 07/04/06	Initials: LTA
Full Path: www.dot.state.co.us/DesignSupport/	
Drawing File Name: 601030102.dw	
CAD Ver.: MicroStation V8 Scale: Not to Scale	Units: English

R–X
R–X
R–X
R–X

Sheet Revisions	
Date:	Comments

Colorado Department of Transportation
4201 East Arkansas Avenue
Denver, Colorado 80222
Phone: (303) 757–9083
Fax: (303) 757–9820
Project Development Branch SRJ/LTA

TRIPLE CONCRETE BOX CULVERT

Issued By: Project Development Branch on July 04, 2006

STANDARD PLAN NO.
M-601-3
Sheet No. 1 of 2