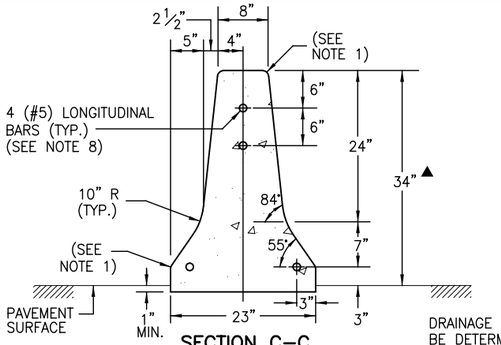

SECTION C–C
STYLE CA
CONCRETE BARRIER (TYP.)

DRAINAGE SLOT DIMENSIONS AND LOCATIONS SHALL BE DETERMINED BY A HYDRAULIC ENGINEER AND SHOWN ON THE PLANS WHEN THE FLOW MUST BE CARRIED ACROSS A BARRIER SECTION (e.g. DROP INLET OR CULVERT OVERTOPPING AREAS).

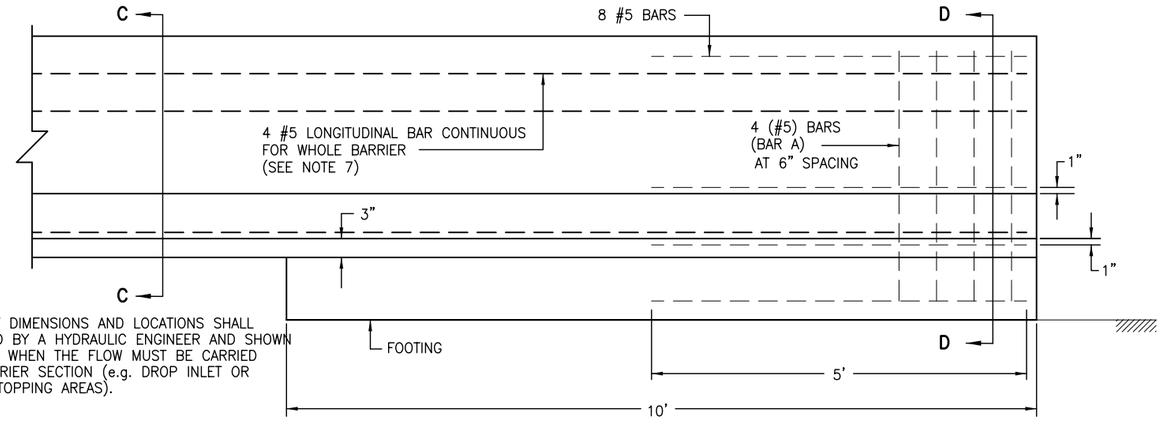

ANCHORAGE

BARRIER ELEVATION VIEW INCLUDING REINFORCED ANCHORAGE AT END
(FOR ANCHORAGE THAT TRANSITIONS TO BRIDGE RAIL OR THRIE BEAM, SEE SHEET 2)

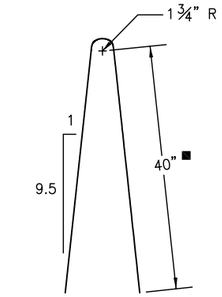

BAR A (#5)

■ SHALL BE 38 IN. IN ANCHORAGE THAT TRANSITIONS FROM TYPE 7 TO TYPE 3G–THRIE BEAM (SEE SHEET 2)

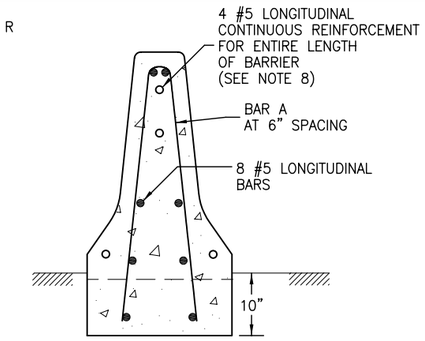

SECTION D–D *
ANCHORAGE

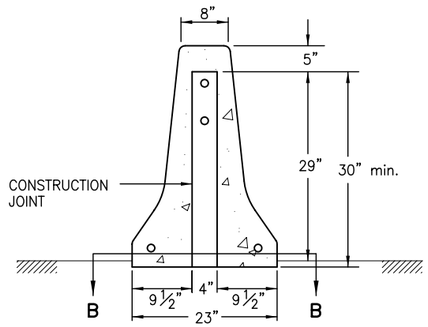

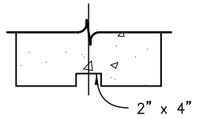

SECTION B–B
CONSTRUCTION JOINT *

* SEE STYLE CA DETAIL FOR TYPICAL DIMENSIONS.

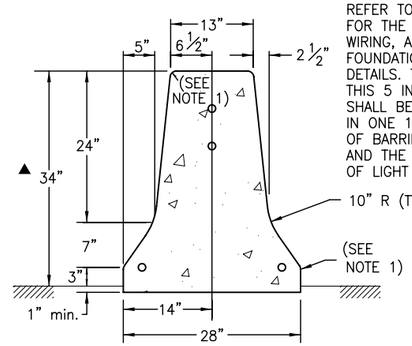

STYLE CL
BARRIER FOR MOUNTED LIGHT POLES

REFER TO THE PLANS FOR THE REINFORCING, WIRING, AND LIGHT POLE FOUNDATION INSTALLATION DETAILS. THE TRANSITION TO THIS 5 IN. WIDER SECTION SHALL BE ACCOMPLISHED IN ONE 10 FT. LONG SEGMENT OF BARRIER AT THE BEGINNING AND THE END OF THE RUN OF LIGHT POLES.

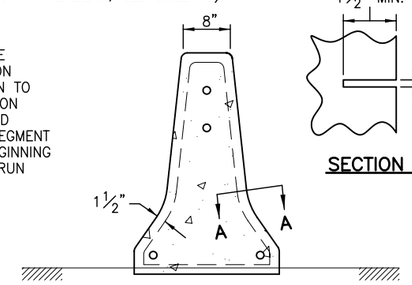

TRANSVERSE CONTRACTION JOINTS *

FORMED OR SAWED TRANSVERSE CONTRACTION JOINTS ARE REQUIRED AT 20 FT. INTERVALS

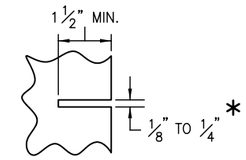

SECTION A–A

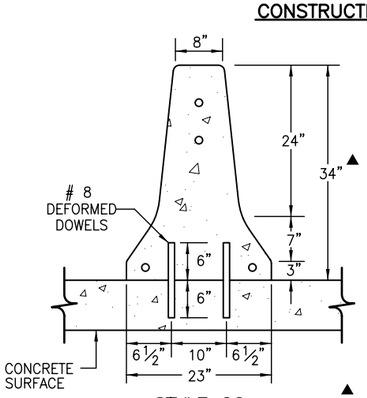

STYLE CC
BARRIER DOWELLED TO CONCRETE SURFACE

▲ IN FUTURE OVERLAYS, AN OVERALL MINIMUM HEIGHT OF 31 IN. IS REQUIRED.

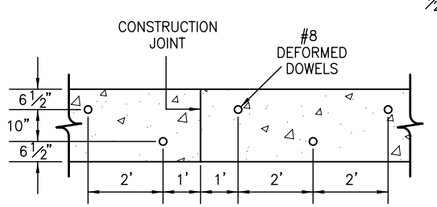

DOWEL PLACEMENT LAYOUT
FOR STYLE CC BARRIER
(PLAN VIEW)

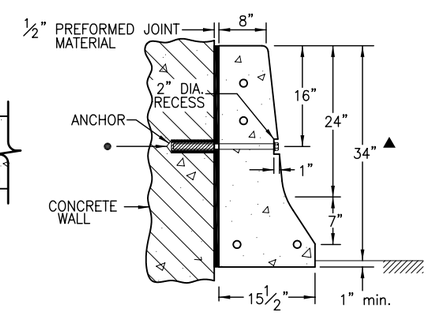

STYLE CD
BARRIER AGAINST WALL

● 1/2 IN. DIA. x 1 FT. LONG GALVANIZED ANCHOR BOLT AND WASHER, MECHANICALLY FASTENED AT 2 FT. – 6 IN. CENTERS. USE ONLY WHEN CALLED FOR ON PLANS.

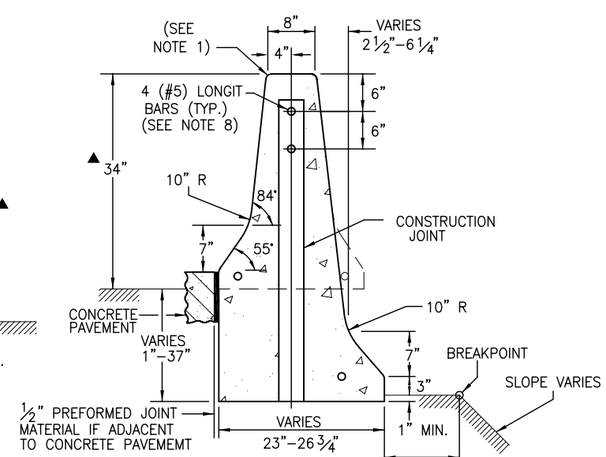

STYLE CE *
BARRIER FOR OFFSET ROADWAYS

GENERAL NOTES

1. ALL EDGES SHALL BE ROUNDED WITH A 1 IN. RADIUS EXCEPT AS SHOWN
2. THE BARRIER SHALL BE ANCHORED AT THE ENDS AND AT INTERRUPTIONS WITH THE 10 FT. REINFORCED ANCHORAGE. THE FOOTING AND END BARRIER MAY BE MONOLITHIC OR THE BARRIER MAY BE CONNECTED TO THE 10 IN. DEEP FOOTING USING TEN #8 REBAR DOWELS (10 IN. LONG) SET TWO IN LINE AT 24 IN. SPACING.
3. BARRIER MAY BE CAST–IN–PLACE, SLIP FORMED, OR PRECAST (SEE STANDARD PLAN M–606–14).
4. BARRIER FOUNDATION SHALL BE PAVEMENT, OR COMPACTED AGGREGATE BASE COURSE, OR EMBANKMENT MATERIAL.
5. NO FOOTING IS REQUIRED (TYP.) EXCEPT FOR 10 FT. ANCHORAGE.
6. CONSTRUCTION JOINTS SHALL BE USED ON ALL BARRIER TYPES SHOWN, AT THE END OF THE DAY'S POUR OR AFTER ANY INTERRUPTION LONGER THAN 30 MINUTES. ALL CONSTRUCTION JOINTS SHALL BE THOROUGHLY CLEANED BEFORE FRESH CONCRETE IS POURED.
7. REINFORCING STEEL IN ANCHORAGE SHALL BE GRADE 60 EPOXY COATED DEFORMED BARS.
8. CONTINUOUS LONGITUDINAL REINFORCEMENT SHALL BE EITHER GRADE 60 EPOXY COATED DEFORMED BARS OR WIRE STRAND WITH MINIMUM ULTIMATE TENSILE STRENGTH OF 28,000 LBS. AND CLASS C GALVANIZING ACCORDING TO ASTM A 603.
9. TRANSITION TO EXISTING CONCRETE BARRIER INSTALLATIONS OF DISSIMILAR SHAPE SHALL BE ACCOMPLISHED IN ONE 10 FT. LONG SEGMENT OF BARRIER.
10. CONCRETE SHALL BE CLASS D.
11. ADDITIONAL MATERIAL FOR BARRIER EMBEDMENT GREATER THAN 1 IN. WILL NOT BE MEASURED AND PAID FOR SEPARATELY BUT SHALL BE INCLUDED IN THE WORK.
12. EPOXY COATED LONGITUDINAL REBAR SHALL HAVE A MINIMUM LAP SPLICE OF 38 IN. WIRE STRAND LONGITUDINAL REINFORCEMENT SHALL BE BUTT WELDED OR MECHANICALLY SPLICED TO MAINTAIN 100 PERCENT OF THE MINIMUM REQUIRED TENSILE STRENGTH.
13. ALL INCIDENTAL WORK AND MATERIAL SUCH AS DOWELS, GROUT, ANCHORS, BOLTS, PINS, JOINT MATERIAL, EXCAVATION FOR BASES, CONTINUOUS LONGITUDINAL REINFORCEMENT, SHALL BE INCLUDED IN THE COST OF GUARDRAIL.
14. RETROREFLECTORIZATION IS REQUIRED ON ALL BARRIER TYPES. SEE BARRIER RETROREFLECTOR NOTES ON STANDARD PLAN S–612–1.

Computer File Information	
Creation Date: 07/04/06	Initials: SJR
Last Modification Date: 07/04/06	Initials: LTA
Full Path: www.dot.state.co.us/DesignSupport/	
Drawing File Name: 6060130104.dw	
CAD Ver.: MicroStation V8 Scale: Not to Scale	Units: English

(R–X) (R–X) (R–X) (R–X)

Sheet Revisions	
Date:	Comments

Colorado Department of Transportation
4201 East Arkansas Avenue
Denver, Colorado 80222
Phone: (303) 757–9083
Fax: (303) 757–9820
Project Development Branch SRJ/LTA

GUARDRAIL TYPE 7 F-SHAPE BARRIER

Issued By: Project Development Branch on July 04, 2006

STANDARD PLAN NO.
M-606-13
Sheet No. 1 of 4