W16-5pR

ARROW PLAQUE

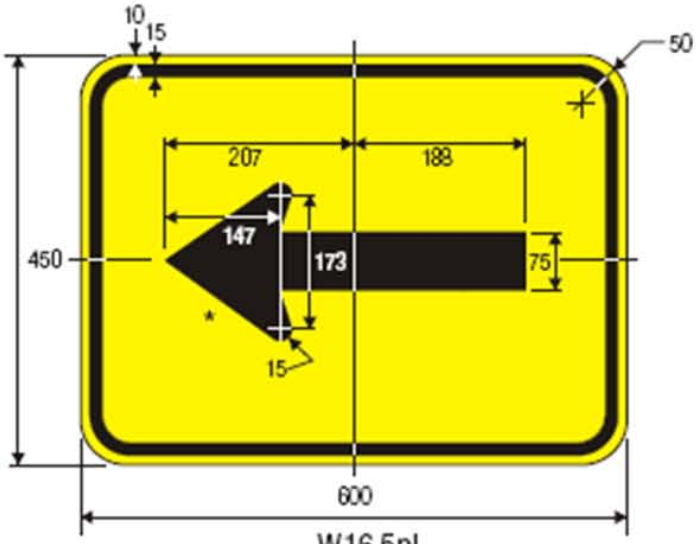

W16-5pL

ARROW PLAQUE

W16-6pR

ARROW PLAQUE

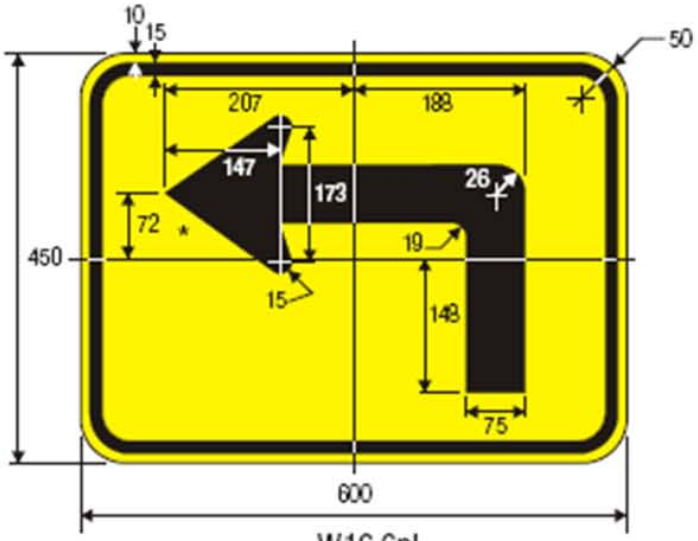

W16-6pL

ARROW PLAQUE

*See page 6-2 for arrow design.

COLORS: LEGEND — BLACK
BACKGROUND— YELLOW (RETROREFLECTIVE)