See Standard M-100-1 for STANDARD SYMBOLS

(R-1) 9-22-86 ~ REVISED INDEX ~ L.E.G.

STATE DEPARTMENT OF HIGHWAYS
DIVISION OF HIGHWAYS — STATE OF COLORADO

PE & UTILS UNDER IXFU 470-1(2)
R.O.W. UNDER IXFU470-1(2) AND IXFU470-1(58)

FEDERAL ROAD REGION NO	DIVISION	PROJECT NO	SHEET NO
VIII	COLORADO	IXFU470-1(42) IXFU470-1(35)	1/2

AS CONSTRUCTED

NO REVISIONS [ ] REVISED [12-1-87] VOID [ ]

REVISIONS			
(R-1)	9-22-86	1, 6, 9, 13, 19, 20, 92, added 209	L.E.G.

PLAN AND PROFILE OF ~~PROPOSED~~

COMBINED FEDERAL AID PROJECT NO. IXFU 470-1(42) & IXFU 470-1(35)

STATE HIGHWAY NO. 470

JEFFERSON COUNTY

SCALES OF ORIGINAL DRAWINGS
AS SHOWN ON PLAN AND PROFILE

GRADE LINE ON PROFILE IS SHOWN AS GRADE OF FINISHED ROAD

DeLEUW CATHER & COMPANY
DENVER, CO.

DAVID J. WEAVER — REGISTERED PROFESSIONAL ENGINEER — STATE OF COLORADO

PROJECT MANAGER

TABULATION OF LENGTH

STATION	LIN. FT. ROADWAY	LIN. FT. MAJOR STRUCTURE
714+00.00 BEGIN IXFU 470-1(42) = 714+00.00 END IXFU 470-1(43) MILE POST NO. 12.90	5168.10	
765+68.10 BEGIN IXFU 470-1(35) = ON IXFU 470-1(42) = MILE POST NO. 13.88 BEGIN STR. NOS. F-16-MG & F-16-MH		293.23
768+61.33 END STR. NOS. F-16-MG & F-16-MH END IXFU 470-1(35) = ON IXFU 470-1(42) = MILE POST NO. 13.93	1854.27	
787+15.60 END IFXU 470-1(42) = ON CC10-0075-06 MILE POST NO. 14.29		
SUBTOTAL SH. 470	7022.37	293.23
WADSWORTH (FOR INFORMATION ONLY) 1336+50 BEGIN WADSWORTH CONSTRUCTION 1375+35 END WADSWORTH CONSTRUCTION	3885.00	
SUBTOTAL WADSWORTH	3885.00	
COMBINED PROJECT NET LENGTH	10,907.37	293.23

SUMMARY

	LIN. FT.	MILES
ROADWAY - IXFU 470-1(42) (NET LENGTH)	7022.37	1.330
MAJOR STRUCTURES IXFU 470-1(35)	293.23	0.056
COMBINED PROJECTS TOTAL LENGTH	7315.60	1.386

DESIGN DATA

	S.H. - 470	WADSWORTH
MAXIMUM DEGREE OF CURVE	2° 00'	5° 00'
MAXIMUM GRADE	2.69 %	3.8 %
MINIMUM SSD HORIZONTAL	N/A	N/A
MINIMUM SSD VERTICAL	630'	507'
MAXIMUM DESIGN SPEED	70 MPH.	40 MPH.
2005 DESIGN TRAFFIC VOLUME DHV =	4,500	4,740
2005 DESIGN TRAFFIC VOLUME ADT =	37,200	39,200

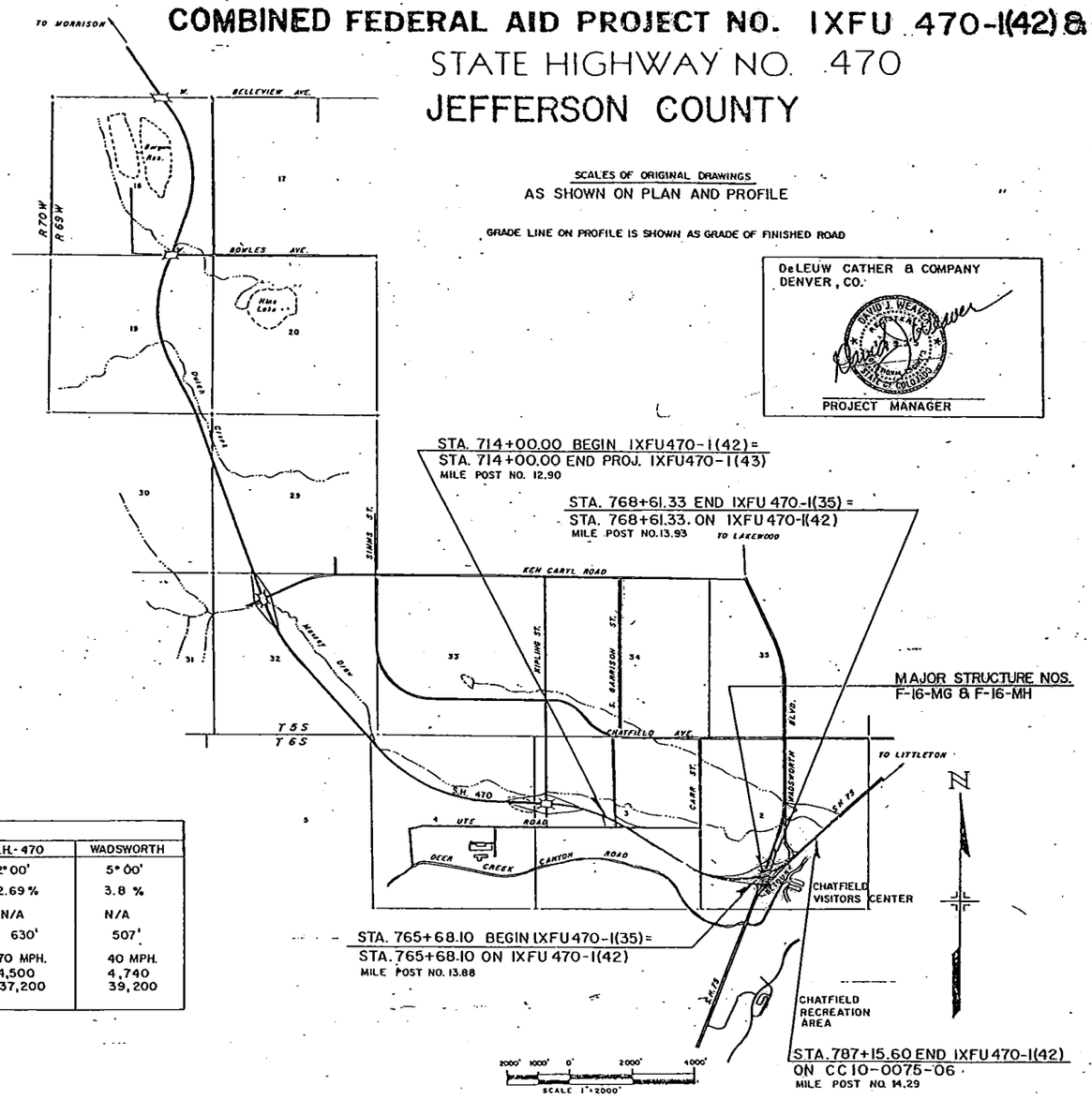

INDEX OF SHEETS

DWG.		SHEET NO.
TS-1	TITLE SHEET	1
SP-1	STD. PLANS LIST	2
TY-1, 2	TYPICAL SECTION--SH 470	3, 4
TY-3	TYPICAL SECTION--SH 470/WADSWORTH RAMPS & DETOUR	5
TY-4	TYPICAL SECTION--WADSWORTH BOULEVARD	6
TY-5	TYPICAL SECTION--CARR, STENE, DEER CREEK	7
TY-6	TYPICAL SECTION--GARRISON, SH 75, VISITORS CENTER RD., INTERIOR ROAD	8
TY-7	TYPICAL SECTION--CHATFIELD ENTRANCE ROAD	9
QS-1 - 7	SUMMARY OF APPROXIMATE QUANTITIES	10 - 16
TG-1	SUMMARY OF EARTHWORK, GENERAL NOTES	17
TG-2	TABULATION OF SURFACING QUANTITIES	18
TG-3, 4	TABULATION OF SIDEWALK, CURB RAMP, CURB AND GUTTER, MEDIAN COVER, BIKEPATH, GUARDRAIL	19, 20
TG-5	TABULATION OF STORM SEWER SYSTEM	21
TG-6, 7	TABULATION OF STRUCTURE QUANTITIES	22, 23
TG-8 - 11	TABULATION OF REMOVE, ADJUST, AND RESET ITEMS	24 - 27
TG-12	TABULATION OF FENCING / DELINEATORS	28
TG-13	TABULATION OF EROSION CONTROL ITEMS	29
EH-1-3	LOGS OF EXPLORATORY HOLES	30, 31-31A
DS-1	RAMP TERMINALS AND SILT FENCE DETAILS	32
B-1 - 30	BRIDGE PLANS	33 - 62
RW-1 - 11	RETAINING WALLS	63 - 73
PP-1 - 7	PLAN AND PROFILE--SH 470 AND BIKEPATH	74 - 80
PP-8 - 13	PLAN AND PROFILE--WADSWORTH BOULEVARD	81 - 86
PP-14 - 16	PLAN AND PROFILE--WADSWORTH INTERCHANGE	87 - 89
PP-17, 18	PLAN AND PROFILE--VISITORS CENTER ROAD	90, 91
PP-19, 20	PLAN AND PROFILE--CHATFIELD ENTRANCE ROAD	92, 93
PP-21, 23	PLAN AND PROFILE--CHATFIELD INTERIOR ROAD	94 - 96
DP-1 - 10	DRAINAGE STRUCTURE PLAN SHEETS	97 - 106
G-1 - 6	GRADING PLAN	107 - 112
L-1 - 8	LANDSCAPING SUMMARY AND PLAN	113 - 120
SS-1	TABULATION OF SANITARY SEWER SYSTEM / WATERLINE	121
SS-2	SANITARY SEWER DETAILS	122
SS-3	CHATFIELD ENTRANCE ROAD UTILITIES	123
VG-1	VEHICLE GATE DETAILS	124
UT-1	D.W.B. WATERLINE ENCASEMENT PLAN & DETAILS	125
A-1 - 3	ENTRY STATION BUILDING ARCHITECTURAL PLAN	126 - 128
E-1	ENTRY STATION BUILDING ELECTRICAL PLAN	129
M-1	ENTRY STATION BUILDING MECHANICAL--HEATING AND PLUMBING	130
TP-1 - 5	TRAFFIC SIGNAL PLAN	131 - 135A
LP-1 - 2	LIGHTING PLAN	136, 137
DE-1 - 6	DETOUR PLAN	138 - 143
SD-1 - 5	DETOUR SIGNING	144 - 148
	STD. M-607-1 SPECIAL THIS PROJECT	149, 150
	SIGNING AND STRIPING PLANS	151 - 183
	RIGHT-OF-WAY PLANS	184 - 190
	STRUCTURE CROSS SECTIONS	191 - 207
	IMPACT ATTENUATOR DETAIL	208
(R-1)	RIGHT OF WAY RESTRICTIONS	209
REVISED M AND S STANDARDS		
M-606-12	GUARD RAIL-TYPE 4 CONCRETE BARRIER (9 SHEETS) 2-18-83	

DIVISION OF HIGHWAYS

APPROVED: James E. Lisch 7-29-86
Asst. CHIEF ENGINEER DATE

AS CONSTRUCTED INFORMATION

CONTRACTOR Kiewit Western Co.
ENGINEER R.L. McKenzie
(Project or Resident)
PROJECT STARTED October 28, 1986
PROJECT COMPLETED [illegible]
AS CONSTRUCTED PLANS APPROVED [illegible]
Const. Engr. 2-2-88
TITLE DATE

LEG - DIST. VI /GWO

OF COLORADO

SUMMARY OF APPROXIMATE QUANTITIES

AS CONSTRUCTED		
NO REVISIONS	REVISED 12-1-87	VOID

FEDERAL ROAD REGION NO	DIVISION	PROJ. NO.	SHEET NO	TOTAL SHEETS
VIII	COLORADO	IXFU 470-1(42) IXFU 470-1(35)	10	211

INDEX 100s	ITEM NO.	SHEET	CONTRACT ITEM NO.	CONTRACT ITEM	UNIT	IXFU 470-1(42) PLAN ROADWAY	IXFU 470-1(42) PROJECT TOTALS	AS CONST. PROJECT TOTALS	IXFU 470-1(35) PLAN ROADWAY	AS CONSTRUCTED ROADWAY	IXFU 470-1(35) PLAN STR. NO. F-16-MG	AS CONST. STR. NO. F-16-MG	IXFU 470-1(35) PLAN STR. NO. F-16-MH	AS CONST. STR. NO. F-16-MH	IXFU 470-1(35) PROJECT TOTALS	AS CONST. PROJECT TOTALS	COMBINED PROJECT TOTALS	AS CONST. PROJECT TOTALS	DIFF. +/-	% PLAN
1	1		201	Clearing and Grubbing.	L.S.	1	1	1									1	1	0	100
1	187		105	PRICE ADJUSTMENT (CONCRETE CLASS S) CMO 135	L.S.	0	1								$16303.50		0		—	—
1	2		202	Removal of Structures and Obstructions	L.S.	1	1	1									1	1	0	100
1	3		202	Removal of Structure	EACH	6	6	8									6	8	+2	133
1	4		202	Removal of Pipe	LIN. FT.	963	963	1,142									963	1142	+179	118
1	5		202	Removal of Barricade	EACH	1	1	1									1	1	0	100
1	6		202	Removal of Delineator	EACH	84	84	84									84	84	0	100
1	7		202	Removal of Curb and Gutter	LIN. FT.	460	460	368									460	368	- 92	80
1	8		202	Removal of Asphalt Mat	SQ. YD.	86,729	86,729	75,645									86,729	75,645	-11,084	88
1	9		202	Removal of Pavement Marking	SQ. FT.	2000	2,000	10,274									2000	10,274	+ 8,274	514
1	10		202	Removal of Portions of Present Structure	L.S.	1	1	1									1	1	0	100
1	11		202	Removal of Ground Sign	EACH	92	92	88									92	88	- 4	96
1	12		202	Removal of Sign Panel	EACH	2	2	2									2	2	0	100
1	13		202	Removal of Traffic Signal Head	EACH	12	12	16									12	16	+4	133
1	14		202	Removal of Traffic Signal Pole	EACH	3	3	3									3	3	0	100
1	15		202	Removal of Traffic Signal Controller and Cabinet	EACH	1	1	1									1	1	0	100
1	16		202	Removal of Pedestal Pole	EACH	1	1	1									1	1	0	100
1	17		202	Removal of Fence	LIN. FT.	4,308	4,308	5,278									4,308	5,278	+970	122
1	18		202	Plug Culvert	EACH	9	9	9									9	9	0	100
3	175		203	EXCESS EXCAVATION CMO 342	CU. YD.	0	0	127,168									0	127,168	—	—
1	19		203	Unclassified Excavation (Complete in Place)	CU. YD.	1,099,351	1,099,351	878,754	23,478	23,478					23,478	23,478	1,122,829	902,232	-220,597	80
1	20		203	Blading	HOUR	500	500	655									500	655	+155	131
1	21		206	Structure Excavation	CU. YD.	9,460	9,460	10,980			1189	1,197	2,013	2,020	3,202	3,217	12,662	14,197	+1535	112
1	22		206	Structure Backfill (Class 1)	CU. YD.	3,064	3,064	2,556			1,250	1,019	1,340	1,190	2,590	2,128	5,654	4,684	-970	83
1	23		206	Structure Backfill (Class 2)	CU. YD.	3,063	3,063	4,279			130	130	130	130	260	260	3,323	4,539	+1216	137
1	24		206	Filter Material (Class B)	CU. YD.	72	72	72			60	290	60	292	120	582	192	654	+462	341
1	25		207	Topsoil (Haul)	CU. YD.	56,623	56,623	56,623									56,623	56,623	0	100
1	26		210	Reset Ground Sign	EACH	11	11	10									11	10	-1	91
1	27		210	Reset Traffic Signal Head	EACH	8	8	12									8	12	+4	150
1	28		210	Reset Traffic Signal Pole	EACH	2	2	2									2	2	0	100
1	29		210	Reset Traffic Signal Controller Cabinet	EACH	1	1	1									1	1	0	100
1	30		210	Reset Fence DELETED BY 105	LIN. FT.	615	615	0									615	0	-615	0
1	31		210	Reset Gate	EACH	1	1	1									1	1	0	100
1	32		210	Reset Guard Rail Type 3	LIN. FT.	1233	1,233	1,430									1233	1,430	+197	116

STATE OF COLORADO

SUMMARY OF APPROXIMATE QUANTITIES

AS CONSTRUCTED		
NO REVISIONS	REVISED 12-1-87	VOID

FEDERAL ROAD REGION NO.	DIVISION	PROJ. NO.	SHEET NO.	TOTAL SHEETS
VIII	COLORADO	IXFU 470-1(42) IXFU 470-1(35)	11	211

INDEX BOOK	INDEX REF. ITEM NO.	INDEX SHEET	CONTRACT ITEM NO.	CONTRACT ITEM	UNIT	IXFU 470-1(42) PLAN ROADWAY	IXFU 470-1(42) PROJECT TOTALS	AS CONST. PROJECT TOTALS	IXFU 470-1(35) PLAN ROADWAY	AS CONSTRUCTED ROADWAY	IXFU 470-1(35) PLAN STR. NO. F-16-MG	AS CONST. STR. NO. F-16-MG	IXFU 470-1(35) PLAN STR. NO. F-16-MH	AS CONST. STR. NO. F-16-MH	IXFU 470-1(35) PROJECT TOTALS	AS CONST. PROJECT TOTALS	COMBINED PROJECT TOTALS	AS CONST. PROJECT TOTALS	DIFF. +/-	% PLAN
1	33		210	Reset End Anchorage	EACH	5	5	3									5	3	-2	60
1	34		210	Adjust Manhole	EACH	4	4	9									4	9	+5	225
1	35		210	Modify Manhole	EACH	2	2	2									2	2	0	100
1	36		212	Seeding (Native)	ACRE	105	105	117.2									105	117.2	+12.2	112
1	37		212	Peat	CU. YD.	123	123	131									123	131	+ 8	106
3	161		213	Mulch Tackifier MCR 142-9	TON	0	0	3.4									0	3.4	—	—
1	38		213	Mulching	ACRE	102	102	113.3									102	113.3	+11.3	111
3	182		213	Soil Retention Blanket (Excelsior) MCR 142-10	SQ. YD.	0	0	827									0	827	—	—
1	39		213	Erosion Bales	EACH	305	305	26									305	26	-277	9
1	40		215	Transplant Tree (1½ Inch To 3 Inch)	EACH	X 21	21 X	20									21 X	20	-1	95
1	41		215	Transplant Tree (3 Inch To 6 Inch)	EACH	6	6	6									6	6	0	100
3	177		304	Aggregate Base Course (Special) MCR 142-5	TON	0	0	5,299.05									0	5,299.05	—	—
3	180		304	1½ Inch Washed Rock MCR 142-8	TON	0	0	317.31									0	317.31	—	—
1	42		307	Hydrated Lime	TON	1,756	1,756	1,277.52									1,756	1,277.52	-478.48	73
1	43		307	Processing Lime Treated Subgrade (8 Inch)	SQ. YD.	133,012	133,012	105,836									133,012	105,836	-27,176	80
3	174		403	HBP Patching MCR 142-2	TON	0	0	605.88									0	605.88	—	—
1	44		403	Hot Bituminous Pavement (Grading E)(Haul and Asphalt) CMO 742	TON	61,310	61,310	61,858.23									61,310	61,858.23	+548.23	101
			403	PRICE ADJ	L.S.			-8,276.21									-8,276.21			
3	184		410	Plant Mix Seal Coat (Type B) CMO 742	TON	0	0	915.27									0	915.27	—	—
1	45		411	Emulsified Asphalt (Slow Setting)	GAL.	16,399	16,339	10,044									16,399	10,044	-6,355	61
1	46		503	Drilled Caisson (18 Inch)	LIN. FT.						736	711	654	597	1,390	1,308	1390	1,308	- 82	94
1	47		503	Drilled Caisson (30 Inch)	LIN. FT.						100	99	84	81	184	180	184	180	-4	98
1	48		503	Drilled Caisson (36 Inch)	LIN. FT.						151	137	116	112	267	249	267	249	-18	93
1	49		506	RipRap	CU. YD.	167	167	210									167	210	+43	126
1	50		506	Heavy Riprap	CU. YD.	84	84	256									84	256	+172	305
2	51		507	Concrete Slope and Ditch Paving (Reinforced)	CU. YD.	33	33	38			111	119	96	102.91	207	221.91	240	259.91	+19.91	108
3	172		510	Structural Plate Arch CMO 442	EACH	0	0	1									0	1	—	—
2	52		512	Bearing Device (Type I)	EACH						14	14	14	14	28	28	28	28	0	100
2	53		513	Drain Pipe (3 Inch)	LIN. FT.	25	25	14									25	14	-11	56
2	54		518	Bridge Compression Joint Sealer	LIN. FT.						40	40	40	40	80	80	80	80	0	100
2	55		518	Waterstop	LIN. FT.						104	92	104	92	208	184	208	184	-24	88
3	167		601	Structural Concrete Coating CMO 442	SQ. FT.	0	0	15,089									0	15,089	—	—
2	56		601	Concrete Class A (Miscellaneous) CMO 442	CU. YD.	406	406	335									406	335	-71	82
2	57		601	Concrete Class A (Bridge)	CU. YD.						500	500	500	500	1,000	1000	1000	1000	0	100
2	58		601	Concrete Class A (Wall)	CU. YD.	472	472	435									472	435	-37	92
2	59		601	Concrete Class S (Bridge)	CU. YD.	99,749	99,749	87,382			980	980	932	932	1,912	1912	1912	1912	0	100
2	60		602	Reinforcing Steel CMO 442	LB.	~~99,449~~	~~99,449~~				186,060	186,060	176,570	176,570	362,630	362,630	462,379 ~~462,079~~	450,012	-12,367	97
2	61		602	Reinforcing Steel (Epoxy Coated)	LB.						51,745	51,745	48,540	48,540	100,285	100,285	100,285	100,285	0	100
2	62		603	18 Inch Reinforced Concrete Pipe	LIN. FT.	1,458	1,458	1,699									1,458	1,699	+ 241	117
2	63		603	24 Inch Reinforced Concrete Pipe	LIN. FT.	592	592	668									592	668	+ 76	113

STATE OF COLORADO

SUMMARY OF APPROXIMATE QUANTITIES

AS CONSTRUCTED		
NO REVISIONS	REVISED 12-1-87	VOID

FEDERAL ROAD REGION NO.	DIVISION	PROJ. NO.	SHEET NO.	TOTAL SHEETS
VIII	COLORADO	IXFU 470-1(42) IXFU 470-1(35)	12	211

INDEX BOOK	INDEX PAGE NO.	INDEX SHEET	CONTRACT ITEM NO.	CONTRACT ITEM	UNIT	IXFU 470-1(42) PLAN ROADWAY	IXFU 470-1(42) PROJECT TOTALS	AS CONST. PROJECT TOTALS	IXFU 470-1(35) PLAN ROADWAY	AS CONSTRUCTED ROADWAY	IXFU 470-1(35) PLAN STR. NO. F-16-MG	AS CONST. STR. NO. F-16-MG	IXFU 470-1(35) PLAN STR. NO. F-16-MH	AS CONST. STR. NO. F-16-MH	IXFU 470-1(35) PROJECT TOTALS	AS CONST. PROJECT TOTALS	COMBINED PROJECT TOTALS	AS CONST. PROJECT TOTALS	DIFF. +/-	% PLAN
2	64		603	30 Inch Reinforced Concrete Pipe	LIN.FT.	156	156	260									156	260	+104	167
2	65		603	36 Inch Reinforced Concrete Pipe	LIN.FT.	230	230	284									230	284	+54	123
2	66		603	48 Inch Reinforced Concrete Pipe	LIN.FT.	152	152	144									152	144	-8	95
2	67		603	54 Inch Reinforced Concrete Pipe	LIN.FT.	416	416	400									416	400	-16	96
3	177		603	54 Inch Reinforced Concrete End Section MCR 142-7	EACH	0	0	4									0	4	—	—
2	68		603	18 Inch Reinforced Concrete End Section	EACH	29	29	37									29	37	+8	128
2	69		603	24 Inch Reinforced Concrete End Section	EACH	15	15	16									15	16	+1	107
2	70		603	30 Inch Reinforced Concrete End Section	EACH	1	1	1									1	1	0	100
2	71		603	36 Inch Reinforced Concrete End Section	EACH	1	1	1									1	1	0	100
2	72		603	48 Inch Reinforced Concrete End Section	EACH	1	1	1									1	1	0	100
2	73		604	Inlet Type C (5 Foot)	EACH	23	23	20									23	20	-3	87
2	74		604	Inlet Type C (10 Foot)	EACH	4	4	8									4	8	+4	200
2	75		604	Inlet Type D (10 Foot)	EACH	1	1	1									1	1	0	100
2	76		604	Inlet Type RL 10(10 Foot)	EACH	2	2	2									2	2	0	100
2	77		604	Manhole Slab Base (5 Foot)	EACH	1	1	1									1	1	0	100
2	78		604	Manhole Slab Base (10 Foot)	EACH	4	4	4									4	4	0	100
2	79		604	18 Inch Reinforced Concrete Pipe Sewer	LIN.FT.	1032	1,032	981									1032	981	-51	95
2	80		604	24 Inch Reinforced Concrete Pipe Sewer	LIN.FT.	1060	1,060	1173									1060	1173	+113	111
2	81		604	30 Inch Reinforced Concrete Pipe Sewer	LIN.FT.	1,316	1,316	1315									1,316	1315	-1	100
2	82		604	8 Inch Plastic Pipe Sewer (Polyvinylchloride)	LIN.FT.	1,335	1,335	1,567									1,335	1,567	+232	117
3	183		606	End Anchorage Type 3F MCR 142-11	EACH	0	0	2									0	2	—	—

(R-1) 9-22-86 ~ Revise and Delete Bid Item ~ L.E.G.

SUMMARY OF APPROXIMATE QUANTITIES

AS CONSTRUCTED		
NO REVISIONS	REVISED 12-1-87	VOID

FEDERAL ROAD REGION NO.	DIVISION	PROJ. NO.	SHEET NO.	TOTAL SHEETS
VIII	COLORADO	IXFU 470-1(42) IXFU 470-1(35)	13	211

INDEX BOOK	INDEX PAGE	INDEX SHEET	CONTRACT ITEM NO.	CONTRACT ITEM	UNIT	IXFU 470-1(42) PLAN ROADWAY	IXFU 470-1(42) PROJECT TOTALS	AS CONST. PROJECT TOTALS	IXFU 470-1(35) PLAN ROADWAY	AS CONSTRUCTED ROADWAY	IXFU 470-1(35) PLAN STR. NO. F-16-MG	AS CONST. STR. NO. F-16-MG	IXFU 470-1(35) PLAN STR. NO. F-16-MH	AS CONST. STR. NO. F-16-MH	IXFU 470-1(35) PROJECT TOTALS	AS CONST. PROJECT TOTALS	COMBINED PROJECT TOTALS	AS CONST. PROJECT TOTALS	DIFF. +/-	% PLAN
2	13		606	Guard Rail Type 3 (6-3 Post Spacing)	Lin. Ft.	1,025	1,025	1,384									1,025	1,384	+359	135
2	14		606	Guard Rail Type 4	Lin. Ft.	368	368	670									368	670	+302	182
2	15		606	End Anchorage Type 3E	Each	6	6	10									6	10	+4	167
2	16		607	End Post	Each	7	7	1									7	1	-6	14
2	17		607	Corner and Line Brace Post	Each	27	27	18									27	18	-9	67
2	18		607	Fence Barbed Wire with Treated Wooden Posts	Lin. Ft.	5,260	5,260	0									5,260	0	-5260	0
2	19		607	Fence Combination Wire with Treated Wooden Posts	Lin. Ft.	5,440	5,440	6,130									5,440	6,130	+690	113
2	20		607	Silt Fence DELETED BY 105	Lin. Ft.	750	750	0									750	0	-750	0
2	91		607	End Post (Chain Link)	Each	2	2	2									2	2	0	100
2	92		607	Corner and Line Brace Post (Chain Link)	Each	5	5	8									5	8	+3	160
2	93		607	Fence Chain Link (72 Inch)	Lin. Ft.	2,120	2,120	2,285									2,120	2,285	+165	108
2	94		607	Vehicle Gate	Each	7	7	7									7	7	0	100
2	95		608	Concrete Sidewalk	Sq. Yd.	798	798	788									798	788	-10	99
2	96		608	Concrete Curb Ramp	Sq. Yd.	44	44	44									44	44	0	100
2	97		608	Concrete Bikeway	Sq. Yd.	1,698	1,698	1,872									1,698	1,872	+174	110
2	98		609	Curb and Gutter Type 2 (Section I-B)	Lin. Ft.	1,836	1,836	1,843									1,836	1,843	+7	100
3	185		609	CURB TYPE 6 (SECTION M) MCR 142-12	LIN. FT.	0	0	910									0	910	—	—
2	99		609	Curb and Gutter Type 2 (Section I-M)	Lin. Ft.	642	642	911									642	911	+269	142
2	100		609	Curb and Gutter Type 2 (Section IIB)	Lin. Ft.	1,568	1,568	1,442									1,568	1,442	-126	92
2	101		610	Median Cover Material (Patterned Concrete)	Sq. Ft.	~~5,338~~ 14,883	~~5,338~~ 14,883	13,502									~~5,338~~ 14,883	13,502	-1381	91
2	102		612	Delineator (Type I)	Each	31	31	142									31	142	+111	458
2	103		612	Delineator (Type II)	Each	42	42	95									42	95	+53	226
2	104		613	3/4 Inch Electrical Conduit	Lin. Ft.						55	28	55	20	110	48	110	48	-62	44
2	105		613	1-1/2 Inch Electrical Conduit	Lin. Ft.	285	285	163									285	163	-122	57
3	186		613	2 INCH PVC MCR 142-4	Lin. Ft.	0	0	599									0	599	—	—
2	106		613	2 Inch Electrical Conduit CMO 642	Lin. Ft.	1,056	1,056	1,673			788	800	752	759	1,540	1,559	2,596	3,232	+636	124
2	107		613	3 Inch Electrical Conduit CMO 642	Lin. Ft.	581	581	872									581	872	+291	150
2	108		613	3 Inch Electrical Conduit (Jacked)	Lin. Ft.	50	50	105									50	105	+55	210
2	109		613	Direct Burial Cable	Lin. Ft.	8,307	8,307	8,762									8,307	8,762	+455	105
2	110		613	Wiring	L.S.	1	1	1									1	1	0	100
2	111		613	Luminaire High Pressure Sodium (47,000 Lumen)	Each	11	11	11									11	11	+0	100
2	112		613	Luminaire High Pressure Sodium (Wall Type)(12,000 Lumen)	Each	2	2	2									2	2	0	100
2	113		613	Luminaire (Special)	Each	3	3	3									3	3	0	100
2	114		613	Light Standard Steel (30 Foot)	Each	3	3	3									3	3	0	100
2	115		613	Light Standard Steel (40 Foot)	Each	7	7	7									7	7	0	100
2	116		613	Concrete Foundation Pad	Each	10	10	10									10	10	0	100
3	117		614	Flagging	Hour	10,000	10,000	7,017.5									10,000	7,017.5	-2982.5	70

HWAYS OF COLORADO

SUMMARY OF APPROXIMATE QUANTITIES

AS CONSTRUCTED		
NO REVISIONS	REVISED 12-1-87	VOID

FEDERAL ROAD REGION NO.	DIVISION	PROJ. NO.	SHEET NO.	TOTAL SHEETS
VIII	COLORADO	IXFU 470-1(42) IXFU 470-1(35)	14	211

INDEX BOX	INDEX ITEM NO.	INDEX SHEET	CONTRACT ITEM NO.	CONTRACT ITEM	UNIT	IXFU 470-1(42) PLAN ROADWAY	IXFU 470-1(42) PROJECT TOTALS	AS CONST. PROJECT TOTALS	IXFU 470-1(35) PLAN ROADWAY	AS CONSTRUCTED ROADWAY	IXFU 470-1(35) PLAN STR. NO. F-16-MG	AS CONST. STR. NO. F-16-MG	IXFU 470-1(35) PLAN STR. NO. F-16-MH	AS CONST. STR. NO. F-16-MH	IXFU 470-1(35) PROJECT TOTALS	AS CONST. PROJECT TOTALS	COMBINED PROJECT TOTALS	AS CONST. PROJECT TOTALS	DIFF. +/-	% PLAN
3	118		614	Traffic Control Supervisor	Day	300	300	201									300	201	-99	67
3	119		614	Sign Panel (Class I) CMO 642	Sq. Ft.	393	393	539									393	539	+146	137
3	120		614	Sign Panel (Class II)	Sq. Ft.	641	641	656									641	656	+15	102
3	121		614	Sign Panel (Class III)	Sq. Ft.	1,364	1,364	1,756									1,364	1,756	+392	129
3	122		614	SIGN LETTERING MCR 142-13	L.S.	0	0	1									0	1	—	—
3	122		614	Timber Sign Post 4x4 Inch	Lin. Ft.	433	433	558									433	558	+125	129
3	123		614	Timber Sign Post 6x6 Inch	Lin. Ft.	1,040	1,040	1,091									1,040	1,091	+51	105
3	124		614	Steel Sign Post (U-2)	Lin. Ft.	535	535	782									535	782	+247	146
3	125		614	Steel Sign Post (W 8x18)	Lin. Ft.	32	32	32									32	32	-0	100
3	126		614	Steel Sign Post (W 8x21)	Lin. Ft.	36	36	165									36	165	+129	458
3	127		614	Concrete Footing (Type 3)	Each	2	2	2									2	2	0	100
3	128		614	Concrete Footing (Type 4)	Each	2	2	7									2	7	+5	350
3	129		614	Concrete Footing VI (Spread)	Each	1	1	1									1	1	0	100
3	130		614	Concrete Footing II-S (Spread)	Each	1	1	1									1	1	0	100
3	131		614	Mask Sign Legend	Each	2	2	4									2	4	+2	200
3	132		614	Balanced Butterfly Structure	Each	1	1	1									1	1	0	100
3	133		614	Cantilever Structure (30 To Less Than 35 Foot Frame)	Each	1	1	1									1	1	0	100

STATE OF COLORADO

SUMMARY OF APPROXIMATE QUANTITIES

AS CONSTRUCTED		
NO REVISIONS	REVISED 12-1-87	VOID

FEDERAL ROAD REGION NO	DIVISION	PROJ. NO	SHEET NO	TOTAL SHEETS
VIII	COLORADO	IXFU 470-1(42) IXFU 470-1(35)	15	211

INDEX NO.	REF. ROUTE NO.	SHEET	CONTRACT ITEM NO.	CONTRACT ITEM	UNIT	IXFU 470-1(42) PLAN ROADWAY	IXFU 470-1(42) PROJECT TOTALS	AS CONST. PROJECT TOTALS	IXFU 470-1(35) PLAN ROADWAY	AS CONSTRUCTED ROADWAY	IXFU 470-1(35) PLAN STR. NO. F-16-MG	AS CONST. STR. NO. F-16-MG	IXFU 470-1(35) PLAN STR. NO. F-16-MH	AS CONST. STR. NO. F-16-MH	IXFU 470-1(35) PROJECT TOTALS	AS CONST. PROJECT TOTALS	COMBINED PROJECT TOTALS	AS CONST. PROJECT TOTALS	DIFF. +/-	% PLAN
3	131		614	Pedestrian Signal Face (16) CMO 642	EACH	16	16	22									16	22	+6	138
3	135		614	Traffic Signal Face (12-8-8) CMO 642	EACH	8	8	12									8	12	+4	150
3	136		614	Traffic Signal Face (12-12-12) CMO 642	EACH	12	12	22									12	22	+10	183
3	137		614	Traffic Signal Face (12-12-12-12-12) CMO 642	EACH	4	4	5									4	5	+1	125
3	138		614	Traffic Signal Controller Cabinet CMO 642	EACH	2	2	3									2	3	+1	150
3	139		614	Coordination Unit. CMO 642	EACH	2	2	3									2	3	+1	150
3	140		614	Loop Detector Wire CMO 642	LIN. FT.	4,725	4,725	7,498									4,725	7,498	+2,773	159
3	141		614	Traffic Signal Vehicle Detector Amplifier (Loop Type) CMO 642	EACH	4	4	6									4	6	+2	150
3	142		614	Flashing Beacon (Portable)	EACH	15	15	15									15	15	0	100
3	143		614	Barricade (Type 3 F-B)	EACH	2	2	2									2	2	0	100
3	144		614	Barricade (Type 3 M-A)	EACH	9	9	9									9	9	0	100
3	145		614	Barricade (Type 3 M-C)	EACH	4	4	2									4	2	-2	50
3	146		614	Barricade (Type 3M-A)(Temporary)	EACH	2	2	8									2	8	+6	400
3	147		614	Barricade (Type 3M-B)(Temporary)	EACH	2	2	6									2	6	+4	300
3	148		614	Barricade (Type 3M-C)(Temporary)	EACH	13	13	1									13	1	-12	8
3	149		614	Construction Traffic Sign (Panel Size A)	EACH	17	17	15									17	15	-2	88
3	150		614	Construction Traffic Sign (Panel Size B)	EACH	100	100	100									100	100	-0	100
3	151		614	Construction Traffic Sign (Panel Size C)	EACH	17	17	17									17	17	-0	100
3	152		614	Vertical Panel	EACH	75	75	85									75	85	+10	113
3	153		614	Vertical Panel (with Light)(Flashing)	EACH	75	75	75									75	75	-0	100
3	154		614	Advance Warning Flashing or Sequencing Arrow Panel (C Type)	EACH	3	3	2									3	2	-1	67
3	155		614	Drum Channelizing Device	EACH	104	104	101									104	101	-3	97
3	156		614	Concrete Barrier (Temporary)	LIN. FT.	1,325	1,325	1,790									1,325	1,790	+465	135

SUMMARY OF APPROXIMATE QUANTITIES

AS CONSTRUCTED			
NO REVISIONS	REVISED 12-1-87	VOID	

FEDERAL ROAD REGION NO	DIVISION	PROJ. NO.	SHEET NO	TOTAL SHEETS
VIII	COLORADO	IXFU 470-1(42) IXFU 470-1(35)	16	211

INDEX SOC	INDEX Page	INDEX Sheet	CONTRACT ITEM NO.	CONTRACT ITEM	UNIT	IXFU 470-1(42) PLAN ROADWAY	IXFU 470-1(42) PROJECT TOTALS	AS CONST. PROJECT TOTALS	IXFU 470-1(35) PLAN ROADWAY	AS CONSTRUCTED ROADWAY	IXFU 470-1(35) PLAN STR. NO. F-16-MG	AS CONST. STR. NO. F-16-MG	IXFU 470-1(35) PLAN STR. NO. F-16-MH	AS CONST. STR. NO. F-16-MH	IXFU 470-1(35) PROJECT TOTALS	AS CONST. PROJECT TOTALS	COMBINED PROJECT TOTALS	AS CONST. PROJECT TOTALS	DIFF. + / -	% PLAN
3	1.57		614	Traffic Cone	Each	400	400	220									400	220	-180	55
3	1.66		614	SPAN WIRE POLE CMO 642	EACH	0	0	4									0	4	—	—
3	1.5		614	Traffic Signal-Light Pole Steel (2 Mast Arm)	Each	4	4	4									4	4	0	100
3	1.1		614	Traffic Signal Pole Steel (2 Mast Arm)	Each	2	2	2									2	2	0	100
3	1.0		614	Traffic Signal Pedestal Pole Aluminum	Each	4	4	5									4	5	+1	125
3	1.61		614	Impact Attenuator (G-R-E-A-T)	Each	2	2	2									2	2	0	100
3	1.6		614	Traffic Signal Controller (Solid State) (Full-Actuated) (4 Phase) CMO 642	Each	2	2	3									2	3	+1	150
3	1.63		618	Prestressing Steel Wire or Strand	LB.						58,180	58,180	47,240	47,240	105,420	105,420	105,420	105,420	0	100
3	1.4		619	2 Inch Plastic Pipe	Lin. Ft.	1305	1,305	1,294									1,305	1,294	-11	99
3	1.65		620	Field Laboratory (Class 2)	Each	1	1	1									1	1	0	100
3	1.66		620	Sanitary Facility	Each	1	1	1									1	1	0	100
3	1.67		622	Entry Station Building	Each	1	1	1									1	1	0	100
3	1.68		625	Construction Surveying	L.S.	1	1	1									1	1	0	100
			626	Mobilization	L.S.	0.7	0.7	0.7	0.1	0.1	0.1	0.1	0.1	0.1	0.3	0.3	1	1	0	100
3	1.69		627	Pavement Marking Paint	Gal.	497	497	693									497	693	+196	139
3	1.70		627	Thermoplastic Pavement Marking	Sq. Ft.	17,535	17,535	18,047									17,535	18,047	+512	103
3	1.71		627	4 Inch Pavement Marking Tape DELETED BY 105	Lin. Ft.	2,000	2,000	0									2,000	0	-2000	0
3	1.72		627	Preformed Plastic Pavement Marking (60 Mils)	Sq. Ft.	1,618	1,618	1,959									1,618	1,959	+341	121
3	1.73		627	Preformed Plastic Pavement Marking (90 Mils) DELETED BY 105	Sq. Ft.	1,312	1,312	0									1,312	0	-1312	0
				FORCE ACCOUNT ITEMS																
			CMO 235	ICE SENSORS	INVOICE	0	0	(7357.00)							0	(37950.94)	0	(37950.94)	—	—
			CMO 242	TELEPHONE SERVICE TO CHATFIELD ENTRY	F.A.	(2460.00)	(2460.00)	(512.00)							(2460.00)	(196.00)	0	(7352.94)	—	—
			F/A01	On-the-Job Trainee	Each	3	3	3	1		1		1		3		(4600.00)	(7675)	—	—
			F/A02	MBE Incentive Payment	F.A.	0.7	0.7	(10,538.48)	0.1		0.1		0.1		0.3		6	6	—	—
			MOD 1-1	PETROLING		(14,000)	(14,000)	(2,450.48)							(4,512.21)		1	10,538.48		
			MOD 1-2	RELOCATE WATER SERVICE				(1,121.20)										2,450.48		
			MOD 1-6	HIRING PEACE GUARDRAIL		(14,000)	(14,000)	(3,262.88)							(6000)		(20,000)	1,121.20		
			F/A03	Minor Contract Revisions	F.A.	0.7	0.7		0.1		0.1		0.1		0.3	0	1	3,262.88	—	—
			F/A04	Temporary Erosion Control	F.A.	1	1	(3776.50)									1	0	—	—
			CMO 242	SUPPLEMENTAL TO 242	F.A	0	0										0	(3776.50)	—	—
			F/A05	Repair and Reset Irrigation System	F.A.	(12010.00)	(12,000.00)	0									(2,000)	0	—	—
			F/A06	Furnish and Install Electrical Service Connection from Power Source to Controllers, and Street Lights and Overhead Signs (Work by Public Service Company)	F.A.	(5000)	(5000)	(12,860.17)									1 (5000)	12,860.17	—	—
			F/A07	Furnish Power Source (Work by Public Service Company)	F.A.	1 (5000)	1 (5000)	(121,736.00)									1 (5000)	(121,736)	—	—
			CMO 242	MINIMUM WAGE RATE	F.A.	0	0	(32052.53)							0	(7222.53)	0	(32276.53)	—	—
			F/A08	INSTALL 24 INCH RCPS CMO 9-12	F.A.	0	0	(24493.89)									0	(24493.89)	—	—

AS CONSTRUCTED			
NO REVISIONS		REVISED 12-1-87	VOID

FEDERAL AID DESIGN NO.	DIVISION	PROJ. NO.	SHEET NO.	TOTAL SHEETS
V111	COLORADO	IXFU 470-1(42) IXFU 470-1(35)	33	211

REVISIONS		

GENERAL NOTES

ORK SHALL BE DONE ACCORDING TO THE STANDARD SPECIFICATIONS OF THE ION OF HIGHWAYS, STATE OF COLORADO, APPLICABLE TO THE PROJECT.

NSTRUCTION DETAILS OF STRUCTURE EXCAVATION AND STRUCTURE BACKFILL, ANDARD M-206-2.

ED WIND LOADS AND EARTHQUAKE LOADS WERE NOT CONSIDERED IN ANA- G THE STRUCTURE FOR STABILITY DURING THE CONSTRUCTION STAGES.

60 REINFORCING STEEL IS REQUIRED FOR #4 BARS AND LARGER. ALL ORCING STEEL NOTED "E.C." SHALL BE EPOXY COATED.

OLLOWING TABLE GIVES THE MINIMUM LAP SPLICE H FOR REINFORCING BARS:

L SIZE	#4	#5	#6	#7	#8	#9	#10	#11
E LENGTH LASS A ETE	1'-0"	1'-3"	1'-8"	2'-3"	3'-0"	3'-10"	4'-10"	5'-11"
E LENGTH LASS B ETE	1'-0"	1'-3"	1'-6"	2'-0"	2'-7"	3'-4"	4'-2"	5'-1"

BOVE SPLICE LENGTHS SHALL BE INCREASED 20 PERCENT FOR 3 BAR ES AND 33 PERCENT FOR 4 BAR BUNDLES.

ISION JOINT MATERIAL SHALL MEET AASHTO SPECIFICATION M-213.

EXPOSED CONCRETE SURFACES DOWN TO 1'-0" BELOW FINISH GRADE L BE FINISHED WITH CLASS I FINISH, FOLLOWED BY AN APPLICATION OLORED COATING MEETING THE REQUIREMENTS IN SPECIAL PROVISION ION OF SECTION 601, STRUCTURAL CONCRETE (COATING).

STRUCTURE NUMBER INSTALLATION. SEE STANDARD S-614-12.

- EACH FACE
- FAR FACE
- NEAR FACE

T.F. - TOP FACE
B.F. - BOTTOM FACE
E.C. - EPOXY COATED

INFORMATION SHOWN ON THESE PLANS CONCERNING TYPE AND LOCATION NDERGROUND UTILITIES IS NOT GUARANTEED TO BE ACCURATE OR ALL IVE. THE CONTRACTOR IS RESPONSIBLE FOR MAKING HIS OWN EMINATION AS TO THE TYPE AND LOCATION OF UNDERGROUND UTILITIES AY BE NECESSARY TO AVOID DAMAGE TO THEM.

CROSS REFERENCE DRAWING NUMBER

B

SECTION OR DETAIL IDENTIFICATION

LOADING DATA

LOAD: AASHTO HS-20-44 AND INTERSTATE ALTERNATE.
LOAD: ASSUMES 48 LBS. PER SQ. FT. FOR BITUMINOUS PAVEMENT.

DESIGN DATA

RENT AASHTO SPECIFICATIONS:

FORCED CONCRETE: REINFORCING STEEL: #4 BARS AND LARGER. f_s = 24,000 PSI.

CLASS A CONCRETE: f'_c = 1,200 PSI. n = 9

CLASS S CONCRETE: f'_c = 4,500 PSI. fc=1,800psi, n=8, AIR CONTENT=5-8%
f'_{ci} = 4,000 PSI

STRESSED CONCRETE: f'_s = 270,000 PSI.

f'_c = (SEE DETAILS)

SUMMARY OF QUANTITIES

	ITEM	DESCRIPTION	UNIT	STRUCTURE F-16-MG SUPER-STRUC.	ABUT. 1	PIER 2	ABUT. 3	APPR. SLABS	TOTAL	STRUCTURE F-16-MH SUPER-STRUC.	ABUT. 1	PIER 2	ABUT. 3	APPR. SLABS	TOTAL	TOTAL F-16-MG F-16-MH
(1)	206	STRUCTURE EXCAVATION	CU.YD.		733	195	261		1189		1058	195	760		2013	~~3202~~ 3217
	206	STRUCTURE BACKFILL (CLASS 1)	CU.YD.		710		540		1250		700		640		1340	~~2590~~ 2608
	206	STRUCTURE BACKFILL (CLASS 2)	CU.YD.			130			130			130			130	260
	206	FILTER MATERIAL (CLASS B)	CU.YD.		30		30		60		30		30		60	~~120~~ 562
(2)	403	HOT BITUMINOUS PAVEMENT (GRDNG EX) (HAUL AND ASPHALT)	TON	136					136	127					127	~~263~~ 0
	503	DRILLED CAISSON (18 INCH)	LIN.FT.		323		413		736		310		344		654	~~1390~~ 1308
	503	DRILLED CAISSON (30 INCH)	LIN.FT.			100			100			84			84	~~184~~ 180
	503	DRILLED CAISSON (36 INCH)	LIN.FT.		68		83		151		53		63		116	~~267~~ 249
	507	CONCRETE SLOPE & DITCH PAVING (REINF.)	CU.YD.		56		55		111		50		46		96	~~207~~ 221
	512	BEARING DEVICE (TYPE 1)	EACH		7		7		14		7		7		14	28
(2)	515	WATERPROOFING (MEMBRANE)	SQ.YD.	1277					1277	1205					1205	2482
	518	BRIDGE COMPRESSION JOINT SEALER	LIN.FT.		20		20		40		20		20		40	80
	518	WATERSTOP	LIN.FT.		52		52		104		52		52		104	208 184
	601	CONCRETE CLASS A (BRIDGE)	CU.YD.		159	126	151	64	500		159	126	151	64	500	1000
	601	CONCRETE CLASS S (BRIDGE)	CU.YD.	937	20		23		980	885	21		26		932	1912
	602	REINFORCING STEEL	LB.	100,870	25,460	26010	26,580	7140	186,060	93,690	25,300	24,355	26,085	7140	176,570	362,630
	602	REINFORCING STEEL (EPOXY COATED)	LB.	50,315	615		755		51,745	47,175	615		750		48,540	100,285
	613	3/4 INCH ELECTRICAL CONDUIT	LIN.FT.	25		30			55	29		26			55	~~110~~ 48
	613	2 INCH ELECTRICAL CONDUIT	LIN.FT.	788					788	752					752	~~1540~~ 1559
(4)	618	PRESTRESSING STEEL WIRE OR STRAND	LB.	58180					58180	47240					47240	105,420
	626	MOBILIZATION	L.S.						0.1						0.1	0.2
(3)		1/2 INCH EXPANSION JOINT MATERIAL	SQ.FT.		10		10	264	284		10		10	264	284	568
(3)		1 INCH EXPANSION JOINT MATERIAL	SQ.FT.		75		78		153		75		78		153	306

(1) INCLUDES ~~207~~ 221 CU. YD. STRUCTURE EXCAVATION FOR CONCRETE SLOPE AND DITCH PAVING. ~~106 CU. YD. FOR ABUT. 1 AND 101 CU. YD. FOR ABUT. 3.~~

(2) FOR INFORMATION ONLY -(FUTURE CONSTRUCTION)-

(3) TO BE INCLUDED IN THE BID PRICE FOR ITEM 601, CONCRETE CLASS S (BRIDGE).

(4) THIS ITEM INCLUDES FURNISHING, PLACING IN THE CONCRETE, AND POST-TENSIONING THE PRESTRESSING STEEL. THE CONTRACTOR SHALL FURNISH ALL STRESSING EQUIPMENT AND ACCESSORIES REQUIRED FOR INSTALLATION AND STRESSING OPERATIONS. WEIGHT SHALL NOT BE MEASURED, BUT SHALL BE QUANTITY SHOWN.

BRIDGE DESCRIPTION

2 - TWO SPANS (150'-0",150'-0") (140'-0",140'-0") CONTINUOUS POST-TENSIONED CONCRETE BOX GIRDER BRIDGES

OVER WADSWORTH BOULEVARD

38'-0" ROADWAY CURB TO CURB

49° 19' 52" SKEW

1'-9" SPECIAL BRIDGE RAILS

INDEX OF DRAWINGS

DWG. NO.	DESCRIPTION
B1	GENERAL INFORMATION - SUMMARY OF QUANTITIES
B2	GENERAL LAYOUT
B3	ENGINEERING GEOLOGY
B4	CONSTRUCTION LAYOUT SPAN 1
B5	CONSTRUCTION LAYOUT SPAN 2
B6	FOOTING AND CAISSON LAYOUT SPAN 1
B7	FOOTING AND CAISSON LAYOUT SPAN 2
B8	ABUTMENT NO. 1
B9	ABUTMENT NO. 3
B10	ABUTMENT DETAILS
B11	WINGWALL DETAILS (ABUTMENT NO. 1)
B12	WINGWALL DETAILS (ABUTMENT NO. 3)
B13	RETAINING WALL DETAILS
B14	PIER NO. 2
B15	PIER NO. 2 DETAILS
B16	SUPERSTRUCTURE DETAILS NO. 1
B17	SUPERSTRUCTURE DETAILS NO. 2
B18	SUPERSTRUCTURE DETAILS NO. 3
B19	CAST-IN-PLACE PRESTRESSED GIRDER DETAILS
B20	BOX GIRDER DETAILS
B21	SLOPE PAVING DETAILS
B22	APPROACH SLAB DETAILS
B23	BENCH MARK
B24	DECK CONTOURS
B25	BRIDGE DECK ELEVATIONS (F-16-MH)
B26	BRIDGE DECK ELEVATIONS (F-16-MH)
B27	BRIDGE DECK ELEVATIONS (F-16-MG)
B28	BRIDGE DECK ELEVATIONS (F-16-MG)
B29	ROADWAY APPROACHES (F-16-MH)
B30	ROADWAY APPROACHES (F-16-MG)

JOHN K. BRICHAL REGISTERED PROFESSIONAL ENGINEER 11977 STATE OF COLORADO

Reviewed H Henric Henson 5-2-89

KKBNA INCORPORATED CONSULTING ENGINEERS DENVER, COLORADO

DIVISION OF HIGHWAYS

S.H.470 OVER WADSWORTH BOULEVARD

GENERAL INFORMATION

SUMMARY OF QUANTITIES

STATION 765+34.02 TO 768+33.53 (F-16-MG)
STATION 766+02.18 TO 768+89.12 (F-16-MH)

NEAR LITLETON SECTION 2, T6S, R69W

Designer	C. COULTER	Structure Number	F-16-MG
Detailer	M. VAN NATTAN		F-16-MH

AS CONSTRUCTED		
NO REVISIONS 12-1-87	REVISED	VOID

FEDERAL ROAD REGION NO.	DIVISION	PROJ. NO.	SHEET NO.	TOTAL SHEETS
VIII	COLORADO	IXFU 470-1(42) IXFU 470-1(35)	34	211

REVISIONS		

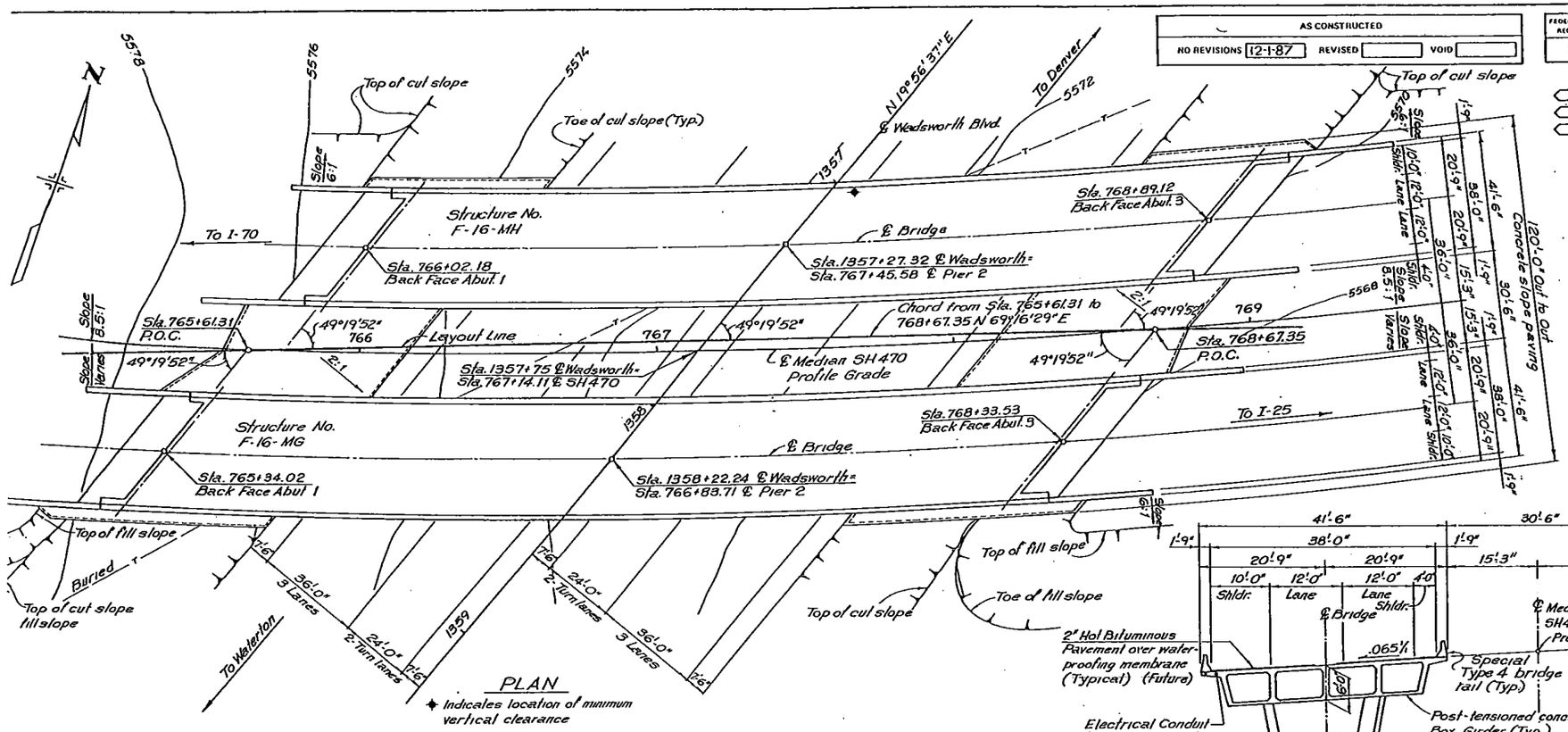

PLAN

◆ Indicates location of minimum vertical clearance

CURVE DATA: (For SH470)

Δ = 77° 3' 53"	Δc = 71° 3' 53"
Ts = 2432.43'	Dc = 2° 00' 00"
Es = 790.37'	Tc = 2045.88'
θs = 3° 00' 00"	Lc = 3553.24'
Ls = 300.00'	Rc = 2864.79'
L.T. = 200.03'	e = .065
S.T. = 100.03'	

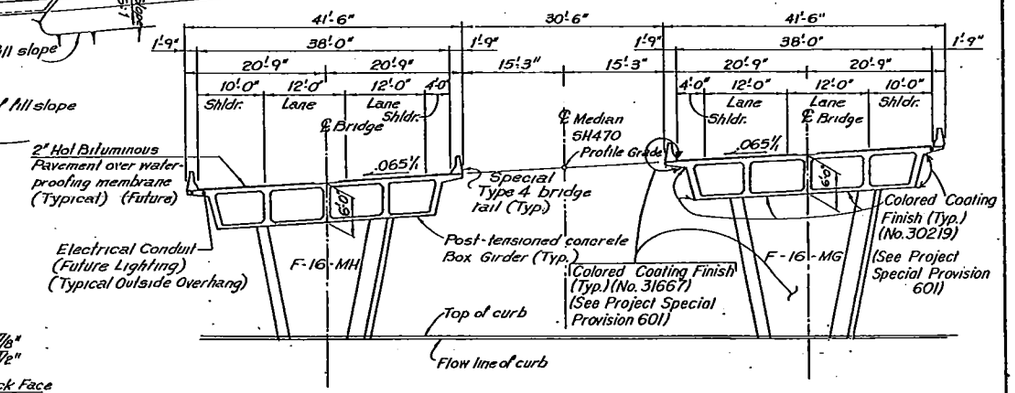

TYPICAL SECTION

Section taken normal to ℄ SH470

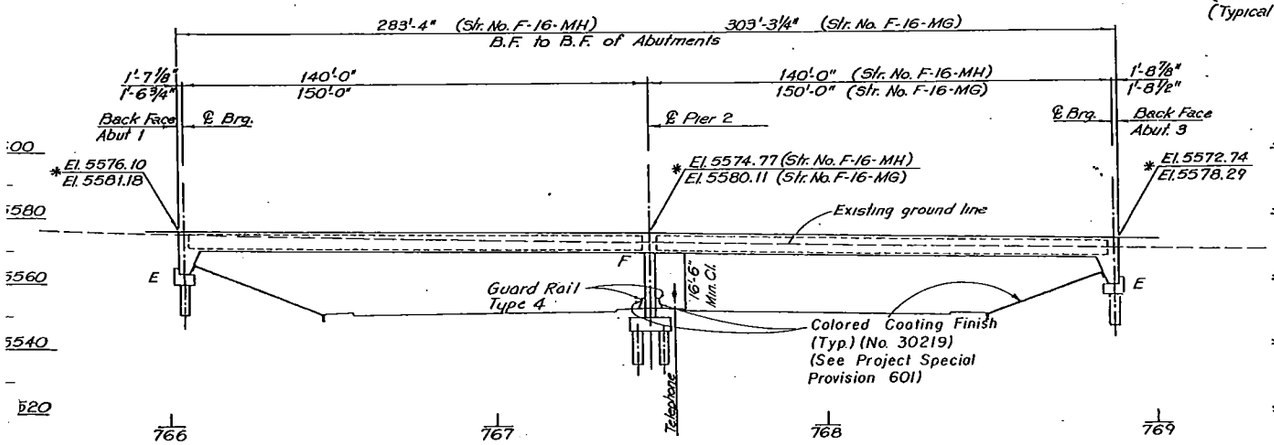

SECTION

℄ Str. No. F-16-MH Shown

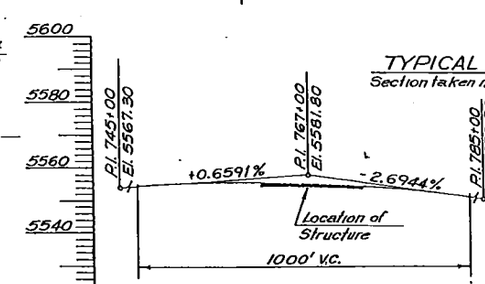

PROFILE GRADE

SH470

Live Loading: HS20-44 & Interstate Alternate

KKBNA, INC. CONSULTING ENGINEERS WHEAT RIDGE, COLORADO

DIVISION OF HIGHWAYS

S. H. 470 OVER WADSWORTH BOULEVARD

GENERAL LAYOUT

Designer	T. Mellon	Structure Numbers	F-16-MG(E.B.L.)
Detailer	B. Cox		F-16-MH(W.B.L.)

FED ROAD REG. NO.	DIVISION	PROJECT NO.	SHEET NO.	TOTAL SHEETS
VIII	COLORADO	IXFU 470-1(42) IXFU 470-1(35)	35	211

AS CONSTRUCTED

NO REVISIONS 12-1-87 REVISED ____ VOID ____

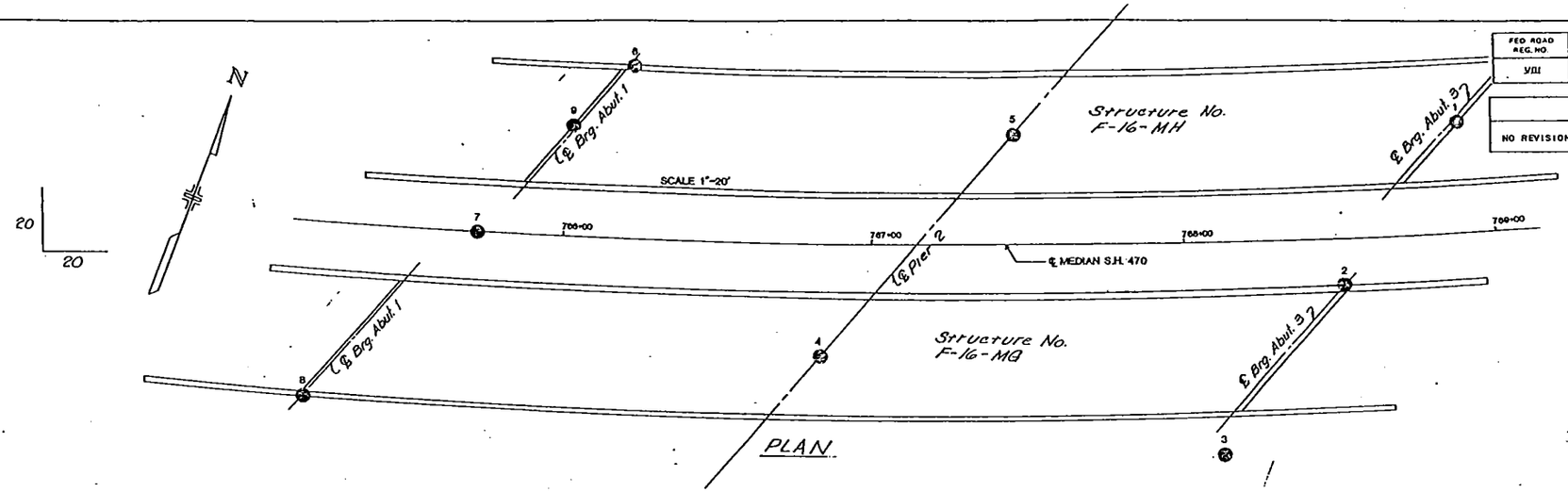

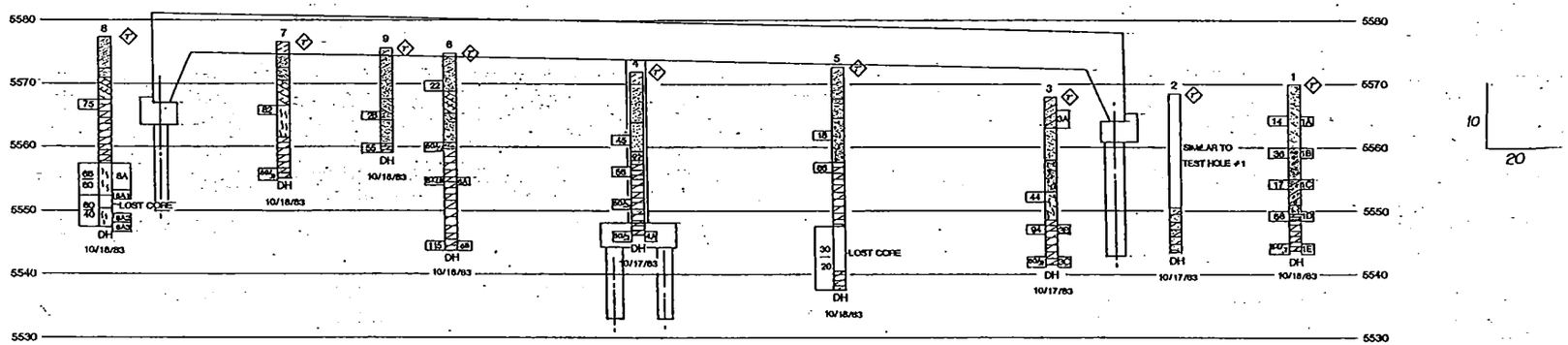

SECTION

Str. No. F-16-MG Shown

10-6.5	SILTY GRAVELLY SAND	A-1-b(0)	21	32	28	19	24	18	6	4.0						
10-11.5	GRAVELLY SAND	A-1-b(0)	41	35	17	7	NV	NP	NP	2.1						
10-16.5	SANDY CLAY	A-4(0)	13	9	37	41	24	16	8	12.7						
20.0-21.5	SILTY SAND	A-2-4(0)	11	10	51	28	24	20	4	13.1						
22.0-23.0	SANDY CLAY	A-7-6(16)	1	11	21	67	45	19	26	10.9						

SUMMARY OF TEST RESULTS

Depth	Classification		Grading Analysis Percent				Atterberg Limits			Water Content %	Wet Unit Weight γ P.C.F.	Unconfined Strength Q_u P.S.F.	Triaxial Shear Strength φ	C P.S.F.	Dia. of Sample Analyzed
	Class. of Engr. or Visual	AASHTO	Gravel	Coarse Sand	Fine Sand	Silt and Clay	Liquid Limit L_L	Plastic Limit P_L	Plastic Index I_P						
21.0-26.2	CLAY	A-7-6(35)	0	2	11	87	58	21	37	20.4	130.8	11.2			1.385
21.0-21.5	CLAY	A-7-6(29)	0	2	11	87	52	21	31	19.1	132.4	13.3			1.388
25.0-26.4	SANDY CLAY	A-7-6(10)	0	3	37	60	41	20	21	15.2	136.3	10.3			1.378
25.0-25.7	SANDY CLAY	A-6(7)	0	1	47	52	37	17	20	14.9	133.6	4.6			1.390
19.5-20.9	CLAY	A-7-6(34)	0	1	3	96	55	24	31	19.1	132.1	8.7			1.380
28.5-30.0	SANDY CLAY	A-7-6(21)	1	1	20	78	47	19	28	15.1	134.2	11.0			1.385
10.0-11.5	SILTY SAND	A-2-4(0)	1	9	70	20	19	16	3	8.7					
24.3-24.8	SANDSTONE									11.5	126.4	11.0			1.910

TYPE OF MATERIAL

- SANDY CLAY
- GRAVELLY SANDY CLAY
- SILT
- CLAYEY SILT
- SANDY SILT
- SAND
- CLAYEY SILTY SAND
- SILTY GRAVELLY COBBLY SAND
- GRAVELLY SAND
- GRAVELLY SILTY SAND
- GRAVELLY COBBLES
- CLAYSTONE
- SANDY CLAYSTONE
- SANDSTONE.

LEGEND

TEST BORING

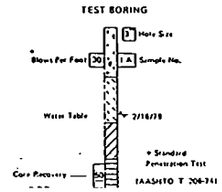

CONTINUOUS PENETRATION TEST

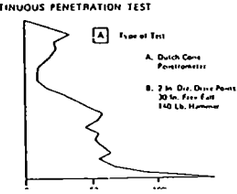

- Location of Test Boring
- Location of Continuous Penetration Test
- Rotary Boring
- Auger Boring
- DH DRY HOLE

REVISIONS		

DIVISION OF HIGHWAYS

ENGINEERING GEOLOGY

S.H. 470 AT WADSWORTH

Geologist EB
Drawn by PM
Checked by EB

Date NOV. 22, 1983

AS CONSTRUCTED		
NO REVISIONS 12-1-87	REVISED	VOID

FEDERAL ROAD REGION NO.	DIVISION	PROJ. NO.	SHEET NO.	TOTAL SHEETS
VIII	COLORADO	IXFU 470-1(42) IXFU 470-1(35)	36	211

REVISIONS		

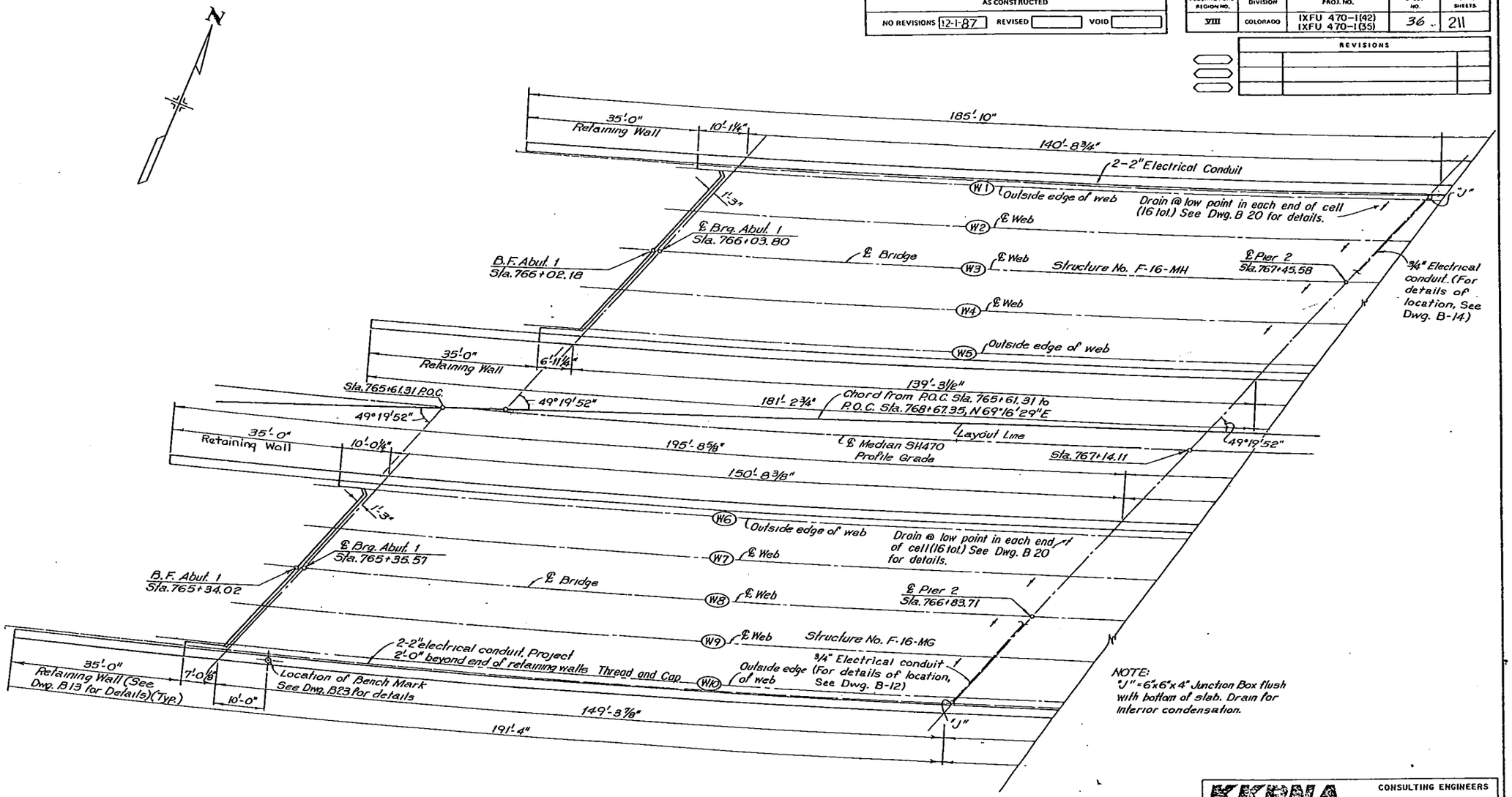

NOTE:
"J" = 6"x6"x4" Junction Box flush with bottom of slab. Drain for interior condensation.

CONSTRUCTION LAYOUT - SPAN 1

Note: For dimensions not shown, refer to Dwg. no. B-5

KKBNA, INC. CONSULTING ENGINEERS WHEAT RIDGE, COLORADO

DIVISION OF HIGHWAYS

SH470 OVER WADSWORTH BOULEVARD

CONSTRUCTION LAYOUT SPAN 1

Designer	T. Mellon	Structure Numbers	F-16-MG
Detailer	B. Cox		F-16-MH

AS CONSTRUCTED			
NO REVISIONS	12-1-87	REVISED	VOID

FEDERAL ROAD REGION NO.	DIVISION	PROJ. NO.	SHEET NO.	TOTAL SHEETS
VIII	COLORADO	IXFU 470-1(42) IXFU 470-K35)	37	211

REVISIONS		

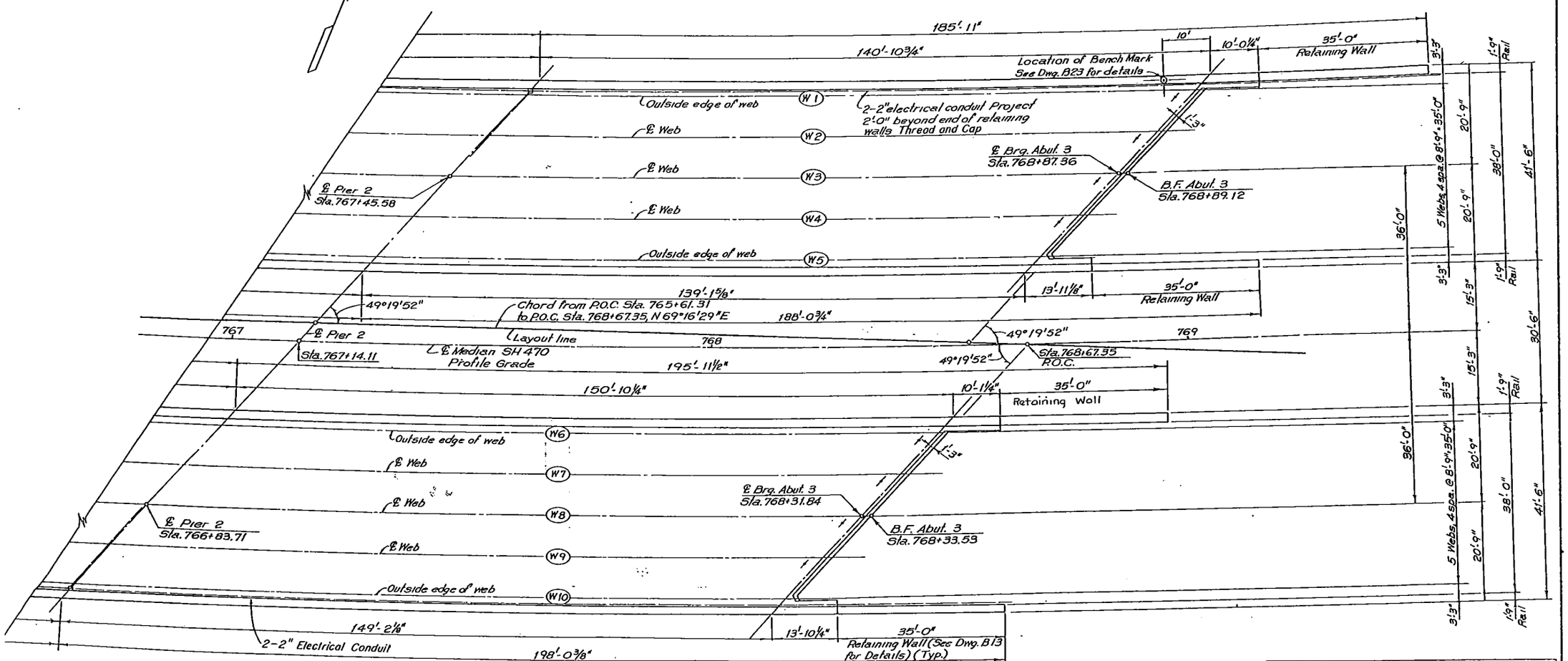

CONSTRUCTION LAYOUT - SPAN 2

KKBNA, INC. CONSULTING ENGINEERS WHEAT RIDGE, COLORADO

DIVISION OF HIGHWAYS

SH470 OVER WADSWORTH BOULEVARD

CONSTRUCTION LAYOUT SPAN 2

Designer	T. Melton	Structure Numbers	F-16-MG
Detailer	B. Cox		F-16-MH

Drawing Number B-5 of 30 Drawings

STRUCTURE	LOCATION	CAISSON ϕ	MAX. LOAD	MIN. CAISSON TIP ELEVATION (Feet)
F-16-MH	Abut. 1	18"	35 ton	South 5550.0 North 5548.0
	Abut. 3	18"	35 ton	So. 5545.0 No. 5545.0
F-16-MG	Abut. 1	18"	35 ton	So. 5554.0 No. 5552.0
	Abut. 3	18"	35 ton	So. 5546.0 No. 5546.0

RETAINING WALL FOUNDATIONS

AS CONSTRUCTED			
NO REVISIONS 12-1-87	REVISED	VOID	

FEDERAL ROAD REGION NO.	DIVISION	PROJ. NO.	SHEET NO.	TOTAL SHEETS
VIII	COLORADO	IXFU 470-1(42) IXFU 470-1(35)	38-1	211

REVISIONS		

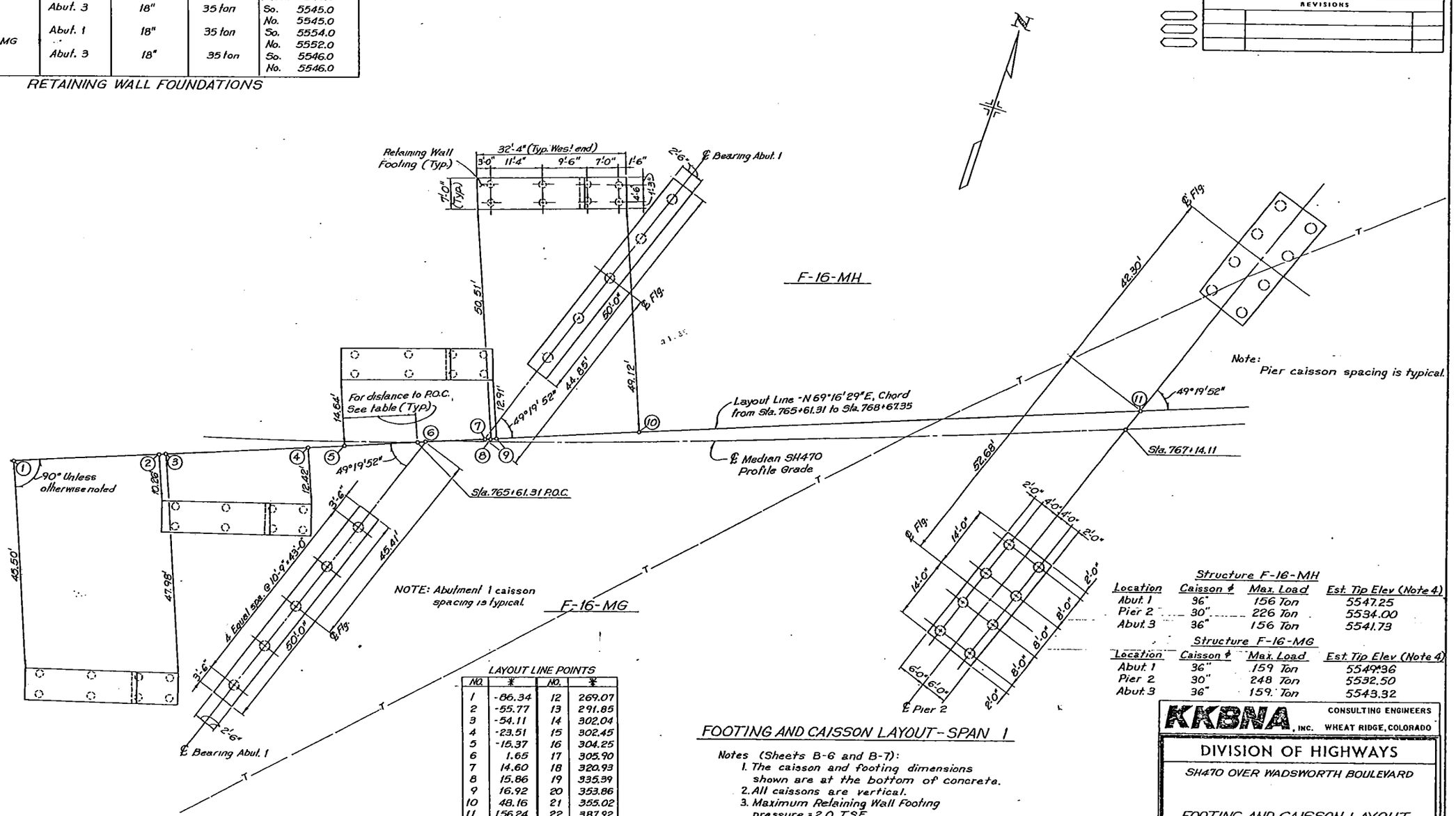

LAYOUT LINE POINTS

NO.	*	NO.	*
1	-86.34	12	269.07
2	-55.77	13	291.85
3	-54.11	14	302.04
4	-23.51	15	302.45
5	-15.37	16	304.25
6	1.65	17	305.90
7	14.60	18	320.93
8	15.86	19	335.39
9	16.92	20	353.86
10	48.16	21	355.02
11	156.24	22	387.92

* Distance from Sta. 765+61.31 P.O.C. along layout line

Structure F-16-MH

Location	Caisson ϕ	Max. Load	Est. Tip Elev (Note 4)
Abut. 1	36"	156 Ton	5547.25
Pier 2	30"	226 Ton	5534.00
Abut. 3	36"	156 Ton	5541.73

Structure F-16-MG

Location	Caisson ϕ	Max. Load	Est. Tip Elev (Note 4)
Abut. 1	36"	159 Ton	5549.36
Pier 2	30"	248 Ton	5532.50
Abut. 3	36"	159 Ton	5543.32

FOOTING AND CAISSON LAYOUT - SPAN 1

Notes (Sheets B-6 and B-7):

1. The caisson and footing dimensions shown are at the bottom of concrete.
2. All caissons are vertical.
3. Maximum Retaining Wall Footing pressure = 2.0 TSF.
4. Minimum caisson penetration into bedrock is as follows:

Structure	F-16-MH	Structure	F-16-MG
Abut. 1	10'-0"	Abut. 1	13'-0"
Pier 2	10'-0"	Pier 2	12'-0"
Abut. 3	6'-6"	Abut. 3	6'-6"

KKBNA, INC. CONSULTING ENGINEERS WHEAT RIDGE, COLORADO

DIVISION OF HIGHWAYS

SH470 OVER WADSWORTH BOULEVARD

FOOTING AND CAISSON LAYOUT SPAN 1

Designer T. Melton	Structure Numbers	F-16-MG
Detailer B. Cox		F-16-MH

AS CONSTRUCTED		
NO REVISIONS 12-1-87	REVISED	VOID

FEDERAL ROAD REGION NO.	DIVISION	PROJ. NO.	SHEET NO.	TOTAL SHEETS
VIII	COLORADO	IXFU 470-1(42) IXFU 470-1(35)	39	211

REVISIONS		

LAYOUT LINE POINTS

NO.	*	NO.	*
1	-86.34	12	269.07
2	-55.77	13	291.85
3	-54.11	14	302.04
4	-23.51	15	302.45
5	-15.37	16	304.25
6	1.65	17	305.90
7	14.60	18	320.93
8	15.86	19	335.39
9	16.92	20	353.86
10	48.16	21	355.02
11	156.24	22	387.92

* Distance from Sta. 765+61.31 POC along layout line

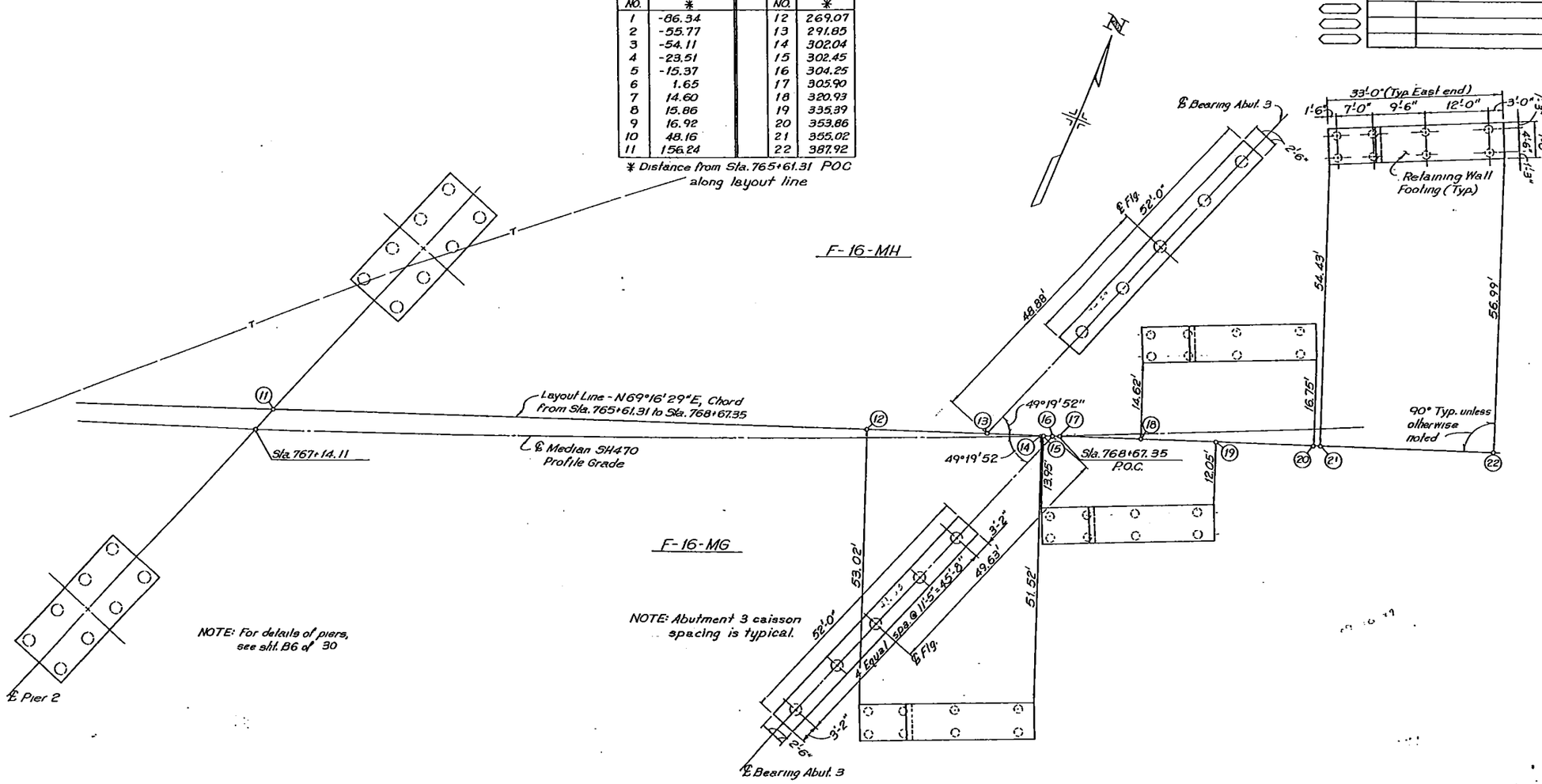

FOOTING AND CAISSON LAYOUT - SPAN 2

KKBNA, INC. CONSULTING ENGINEERS WHEAT RIDGE, COLORADO

DIVISION OF HIGHWAYS

SH470 OVER WADSWORTH BOULEVARD

FOOTING AND CAISSON LAYOUT SPAN 2

Designer	T. Mellon	Structure Numbers	F-16-MG
Detailer	B. Cox		F-16-MH

AS CONSTRUCTED			
NO REVISIONS 12-1-87	REVISED		VOID

FEDERAL ROAD REGION NO.	DIVISION	PROJ. NO.	SHEET NO.	TOTAL SHEETS
VIII	COLORADO	IXFU 470-1(42) IXFU 470-1(35)	40	211

REVISIONS		

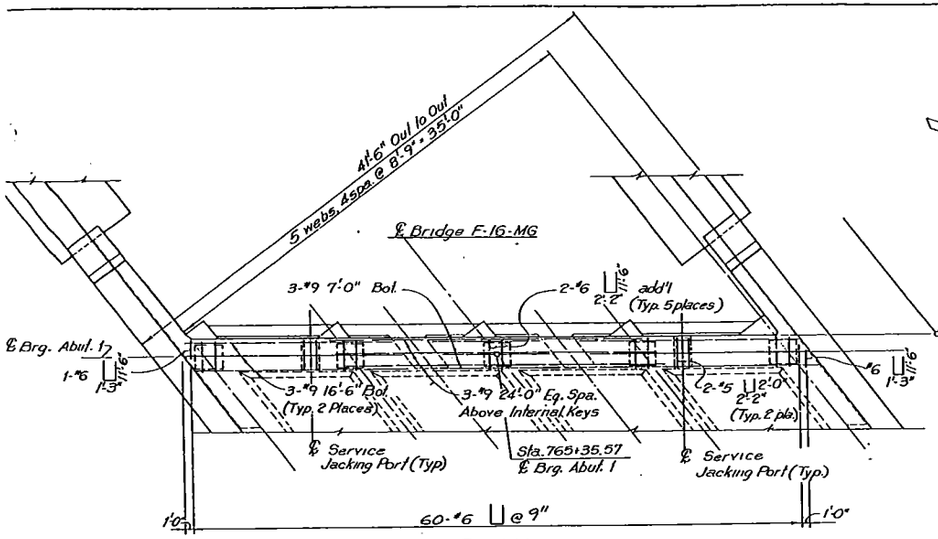

PLAN

NOTES: 1) Refer to F-16-MH Plan for details not shown
2) Refer to Dwgs. B4 thru B7 for abutment and superstructure geometry.
3) Refer to Dwgs. B11 & B12 for wingwall details

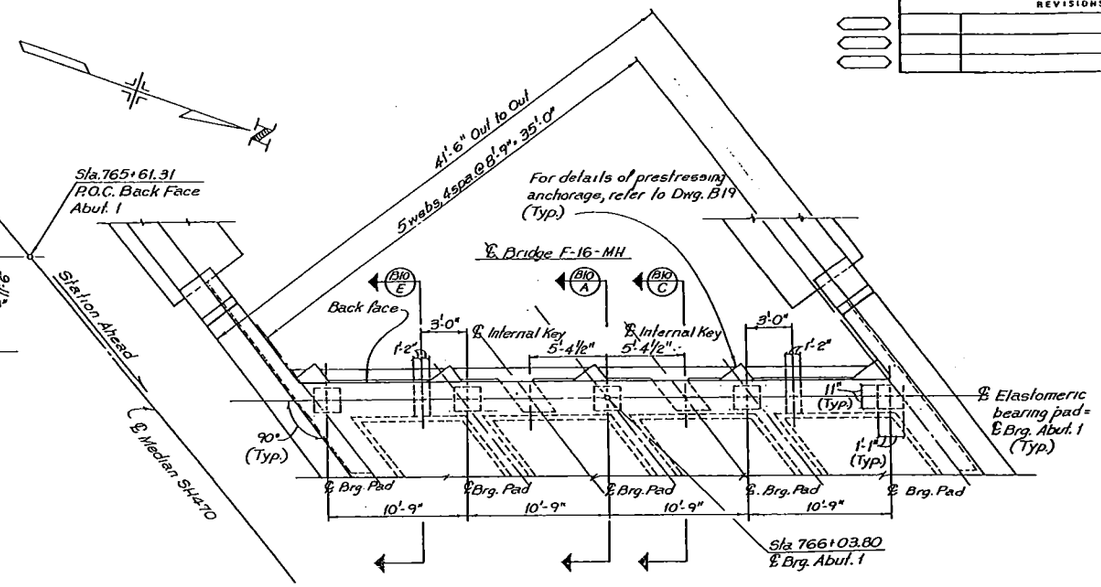

PLAN

Refer to F-16-MG Plan for details not shown

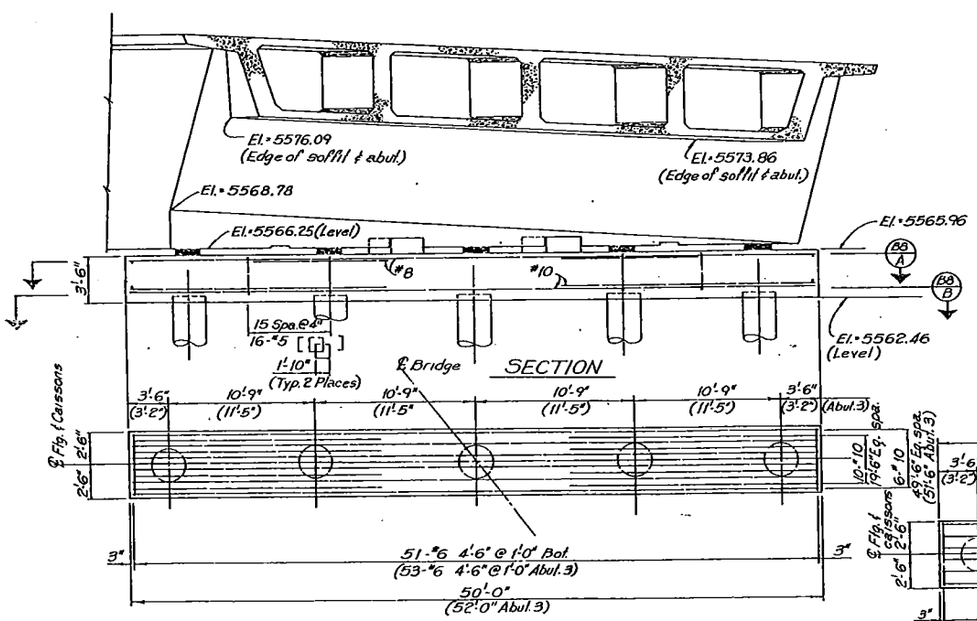

B9 B B8 B SECTION
Abut. 1 Dimension as shown Refer to F-16-MH section

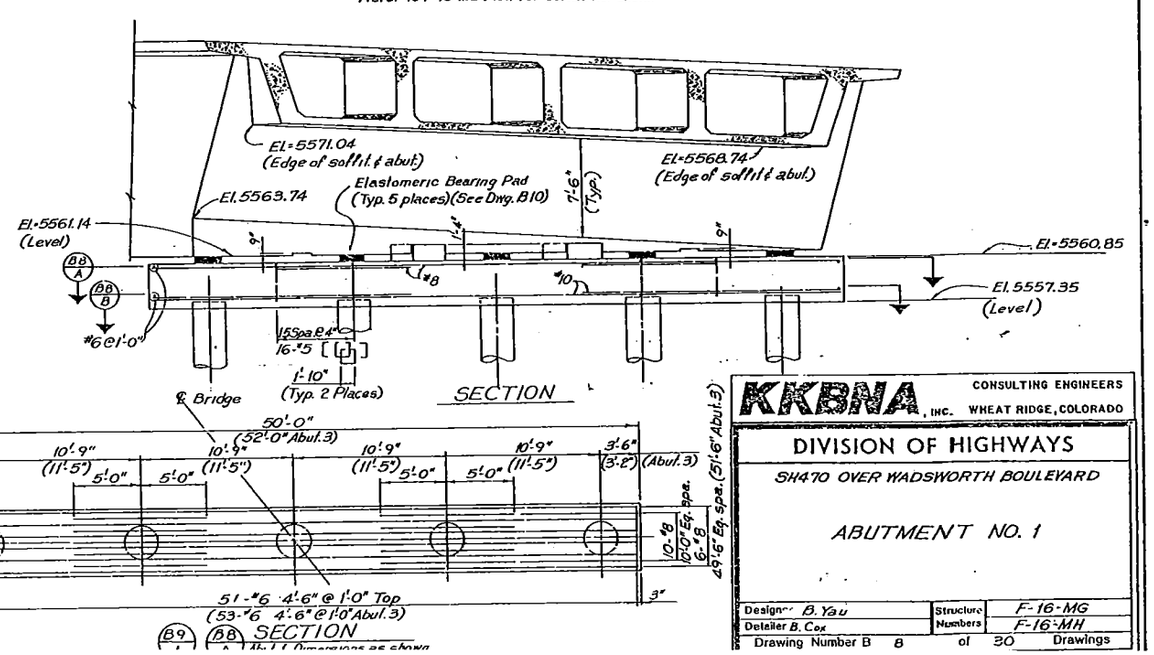

B9 B B8 B SECTION
Abut. 1 Dimensions as shown

KKBNA, INC. CONSULTING ENGINEERS WHEAT RIDGE, COLORADO

DIVISION OF HIGHWAYS

SH 470 OVER WADSWORTH BOULEVARD

ABUTMENT NO. 1

Designer B. Yau		Structure Numbers	F-16-MG
Detailer B. Cox			F-16-MH
Drawing Number B 8	of 30	Drawings	

AS CONSTRUCTED		
NO REVISIONS 12-1-87	REVISED	VOID

FEDERAL ROAD REGION NO.	DIVISION	PROJ. NO.	SHEET NO.	TOTAL SHEETS
VIII	COLORADO	IXFU 470-1(42) IXFU 470-1(35)	41,,,	211

REVISIONS		

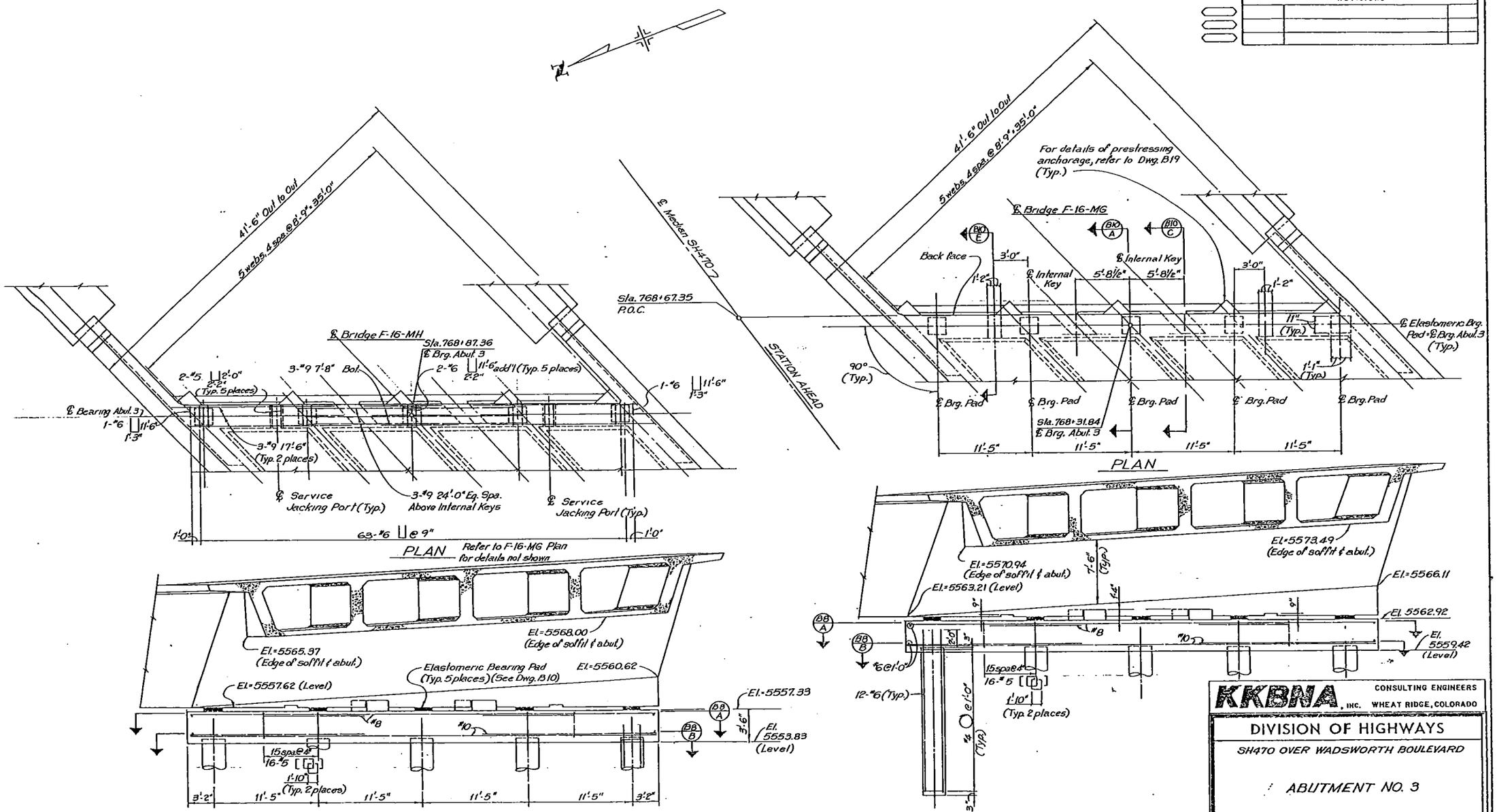

NOTES:
1) Refer to dwgs. B6, B7 & B10 for more information about caisson tips and reinforcing.
2) Refer to Dwgs. B11 & B12 for wing

KKBNA, INC. CONSULTING ENGINEERS WHEAT RIDGE, COLORADO

DIVISION OF HIGHWAYS

SH470 OVER WADSWORTH BOULEVARD

ABUTMENT NO. 3

Designer B. Yau		Structure Numbers	F-16-MG
Detailer B. Cox			F16-MH
Drawing Number B 9 of 30 Drawings			

AS CONSTRUCTED			
NO REVISIONS 12-1-87	REVISED		VOID

FEDERAL ROAD REGION NO.	DIVISION	PROJ. NO.	SHEET NO.	TOTAL SHEETS
VIII	COLORADO	IXFU 470-1(42) IXFU 470-1(55)	42	211

REVISIONS

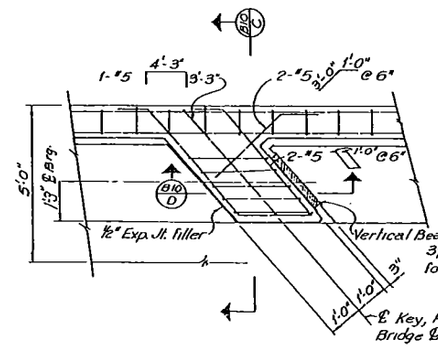

PLAN INTERNAL KEY
(Typ. 2 places)

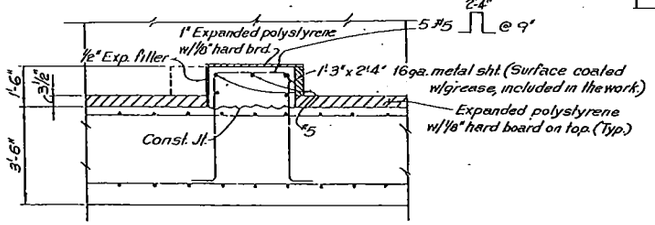

B10 D SECTION

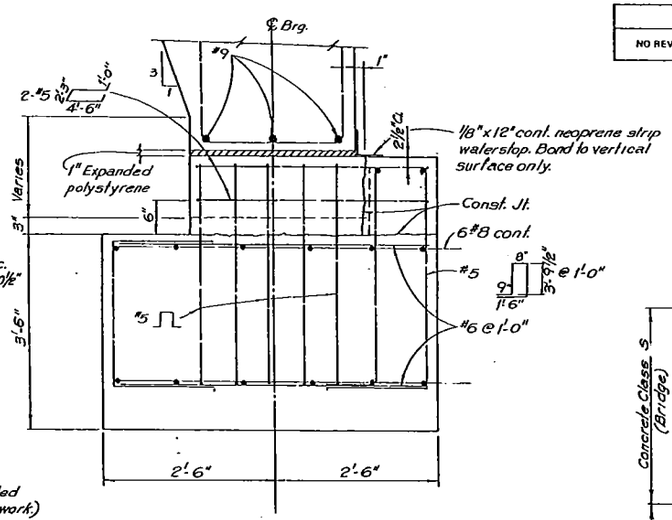

B8 C B9 C B10 C SECTION

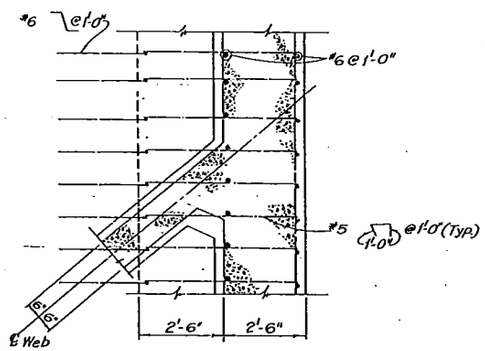

B10 B SECTION

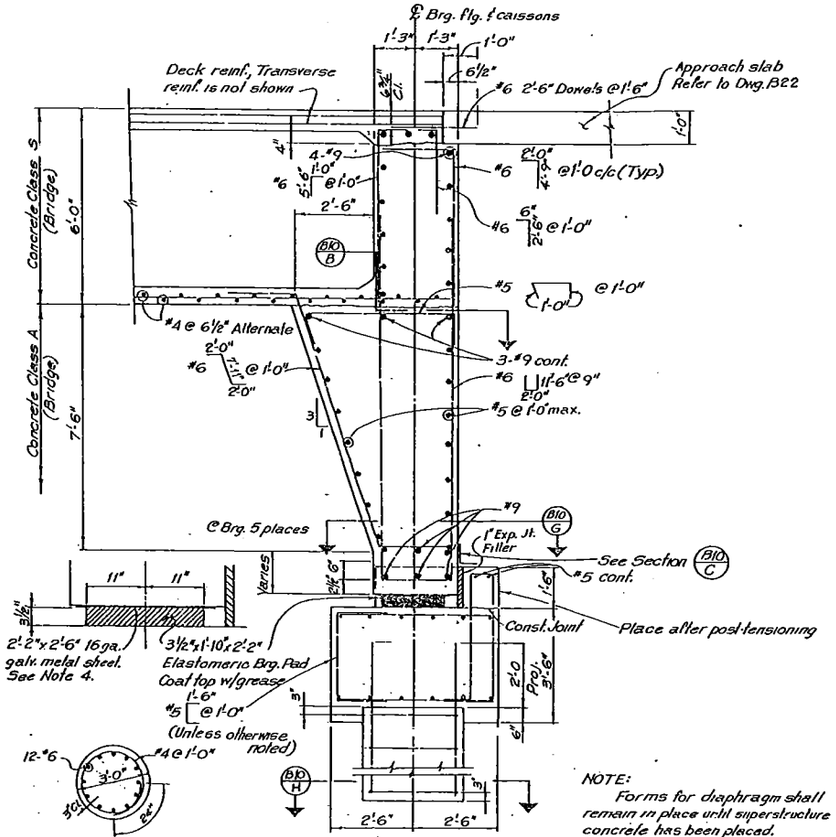

B10 H SECTION

B9 A B8 A SECTION

NOTE:
Forms for diaphragm shall remain in place until superstructure concrete has been placed.

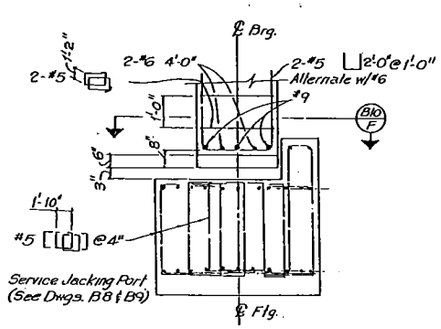

B8 E B9 E SECTION
Service Jacking Port
(Typ. 2 places)

NOTE: Jacking Ports are to be used for Elastomeric brg. pad service

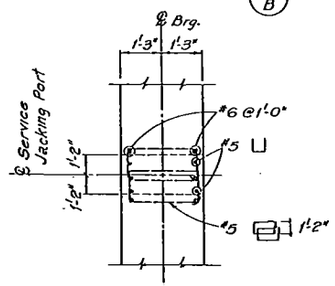

B10 F SECTION
(Typ. 2 places)

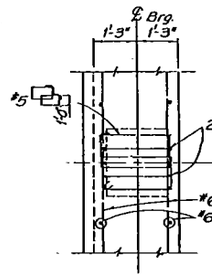

B10 G SECTION
(Typ. 5 places)

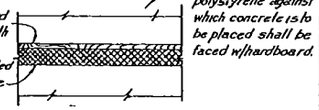

DETAIL

NOTES: 1) Place continuous under end diaphragm.
2) Hardboard and polystyrene shall be included in the work.
3) Both 1/8" hardboard and expanded polystyrene shall remain in place.
4) Apply sheet metal to bearing pad as soon as practicable.

KKBNA, INC. CONSULTING ENGINEERS WHEAT RIDGE, COLORADO

DIVISION OF HIGHWAYS

SH470 OVER WADSWORTH BOULEVARD

ABUTMENT DETAILS

Designer B. Yau	Structure Numbers	F-16-MG
Detailer B. Cox		F-16-MH

AS CONSTRUCTED			
NO REVISIONS	12-1-87	REVISED	VOID

FEDERAL ROAD REGION NO	DIVISION	PROJ. NO.	SHEET NO.	TOTAL SHEETS
VIII	COLORADO	IXFU 470-1(42) IXFU 470-1(55)	43	211

REVISIONS		

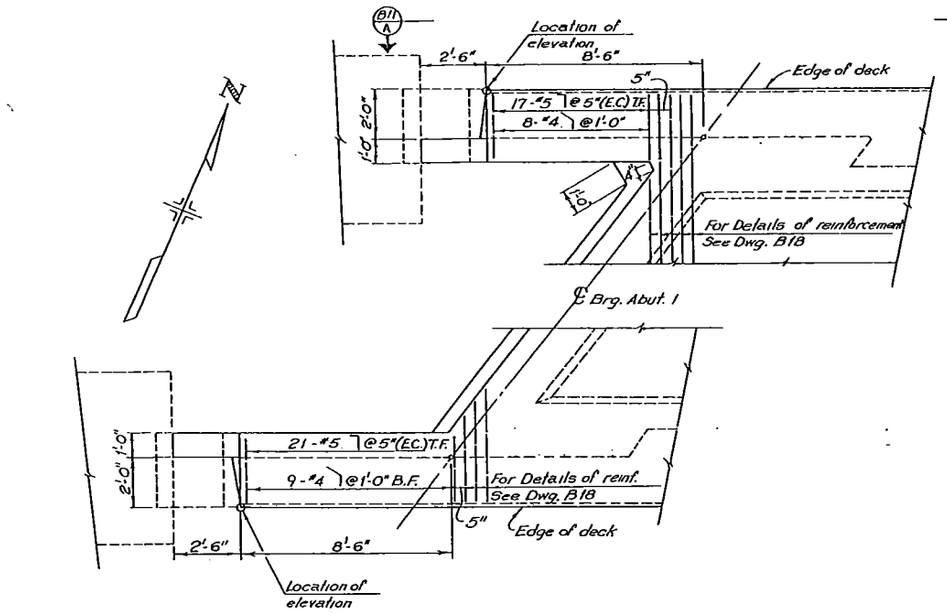

PLAN-ABUTMENT 1
Rail not shown

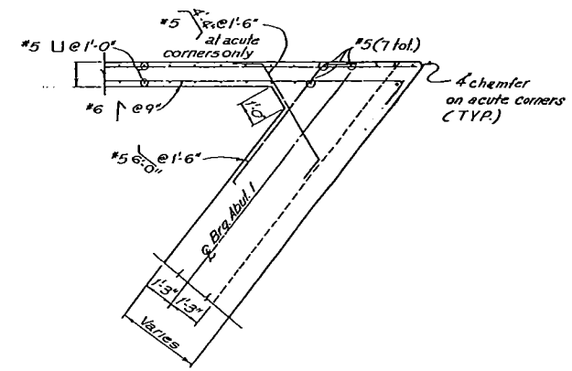

B11 C B12 C SECTION
Right side opposite hand

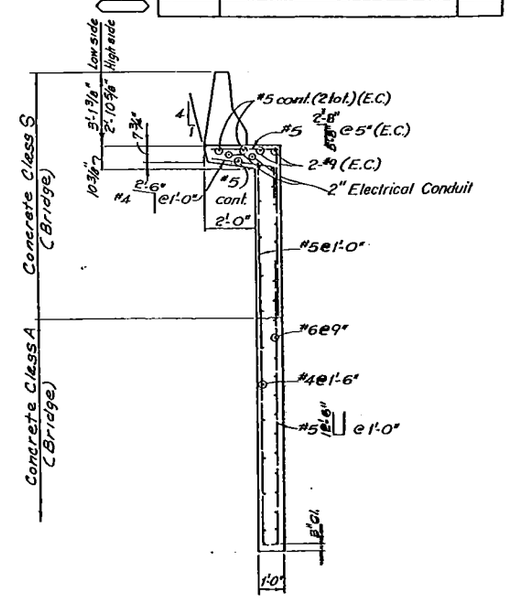

B11 B B12 B SECTION

NOTES:
1.) For details of rail reinforcement see Dwg. B16
2.) Stop joint sealer at bottom of overhang. For detail of joint, see sections B13 E and B13 A
3.) Stop expansion joint material at bottom of retaining wall footing.
4.) All bottom of wing walls are level.

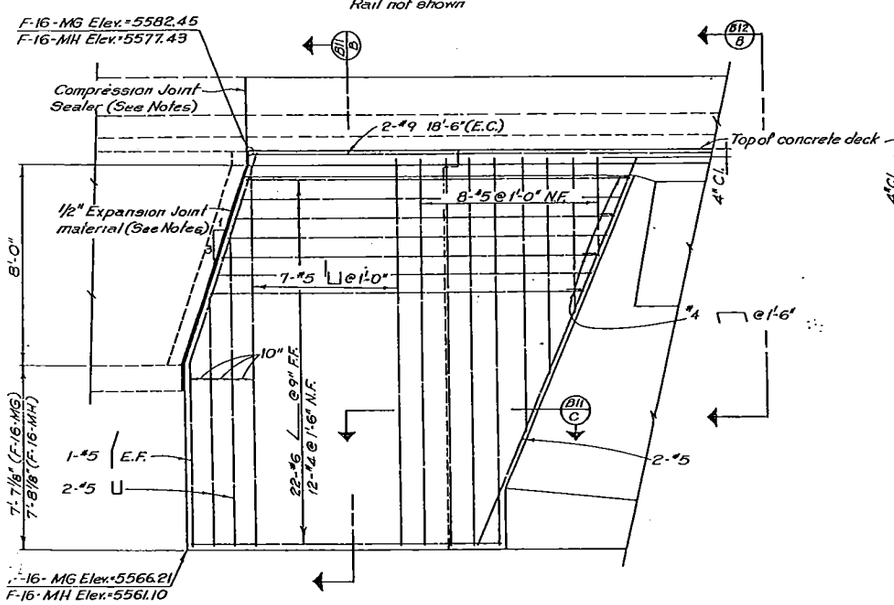

ELEVATION- SOUTH WING

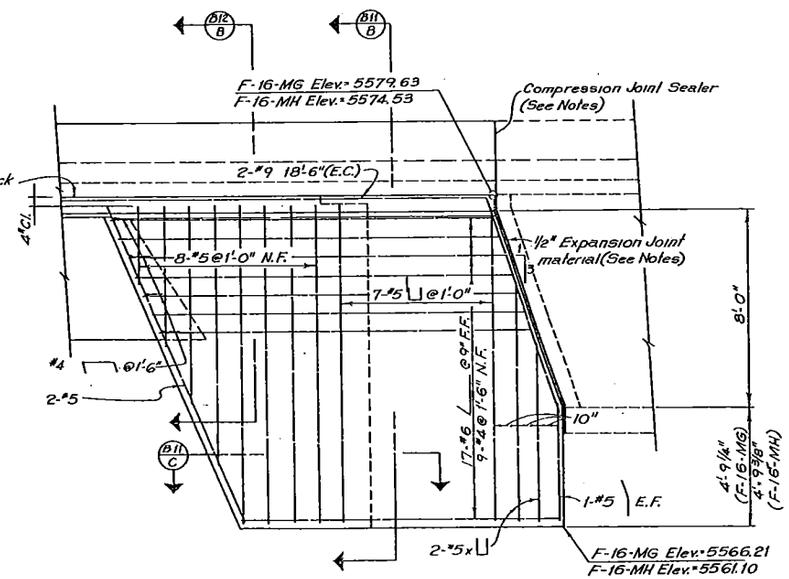

B11 A ELEVATION-NORTH WING

KKBNA, INC. CONSULTING ENGINEERS WHEAT RIDGE, COLORADO

DIVISION OF HIGHWAYS

SH470 OVER WADSWORTH BOULEVARD

WINGWALL DETAILS
(ABUTMENT 1)

Designer T. Melton		Structure Numbers	F-16-MG
Detailer B. Cox			F-16-MH
Drawing Number B 11	of	30	Drawings

AS CONSTRUCTED		
NO REVISIONS 12-1-97	REVISED	VOID

FEDERAL ROAD REGION NO	DIVISION	PROJ. NO.	SHEET NO	TOTAL SHEETS
VIII	COLORADO	IXFU 470-1(42) IXFU 470-1(35)	44.	211

REVISIONS		

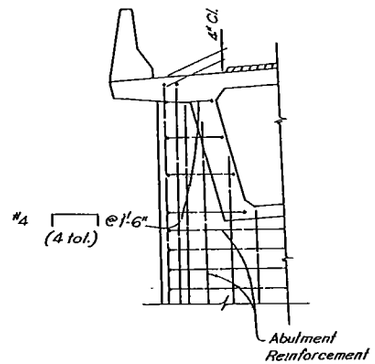

(B11/B) (B12/B) SECTION

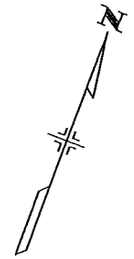

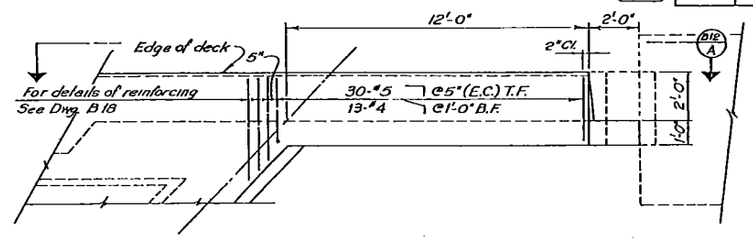

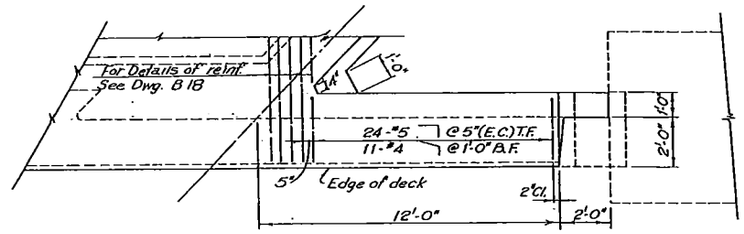

PLAN-ABUTMENT 3
Rail not shown

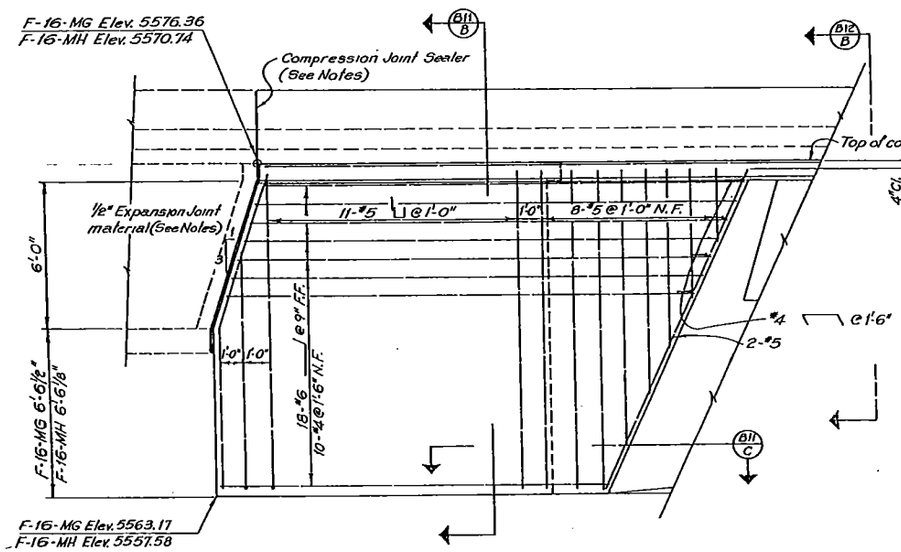

B12/A ELEVATION- NORTH WING

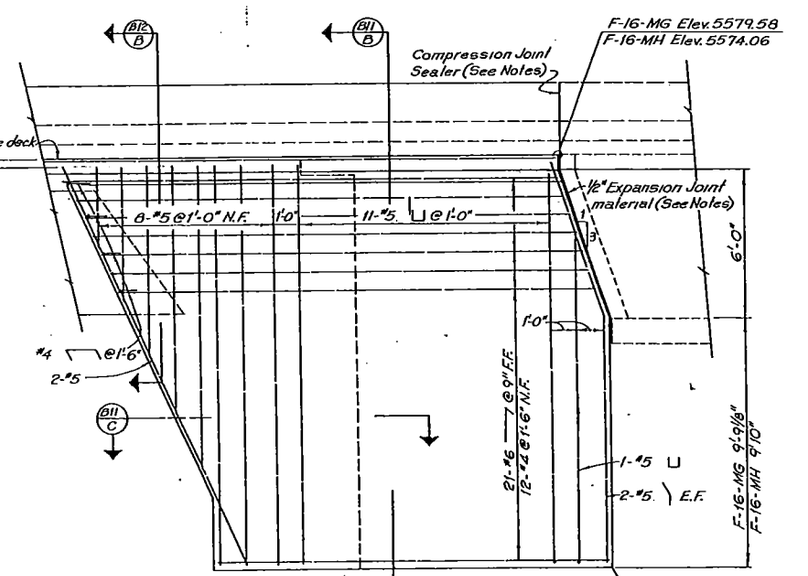

ELEVATION- SOUTH WING

NOTES:
1.) For details of rail reinforcement see Dwg. B 16.
2.) Stop joint sealer at bottom of overhang. For detail of joint, see sections B13/E and B13/A.
3.) Stop expansion joint material at bottom of retaining wall footing.
4.) All bottom of wing walls are level.

KKBNA, INC. CONSULTING ENGINEERS WHEAT RIDGE, COLORADO

DIVISION OF HIGHWAYS

SH470 OVER WADSWORTH BOULEVARD

WINGWALL DETAILS
(ABUTMENT 3)

Designer T. Mellon		Structure Numbers	F-16-MG
Detailer B. Cox			F-16-MH
Drawing Number B 12	of	30	Drawings

AS CONSTRUCTED		
NO REVISIONS 12-1-87	REVISED	VOID

FEDERAL ROAD REGION NO.	DIVISION	PROJ. NO.	SHEET NO.	TOTAL SHEETS
VIII	COLORADO	IXFU 470-1(42) IXFU 470-1(35)	45	211

REVISIONS		

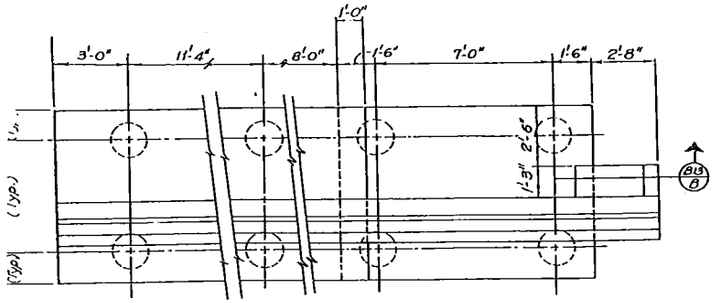

PLAN-ABUTMENT 1
Right Retaining Wall shown, left rail opposite hand

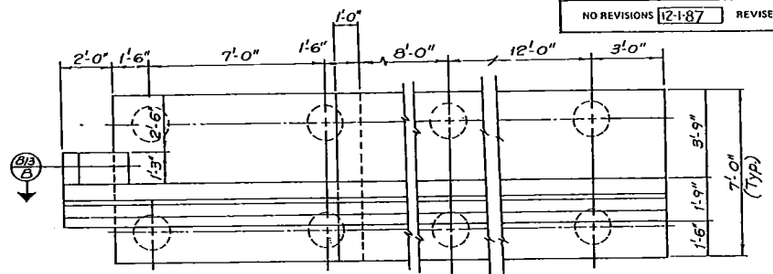

PLAN-ABUTMENT 3
Right Retaining Wall shown, left rail opposite hand

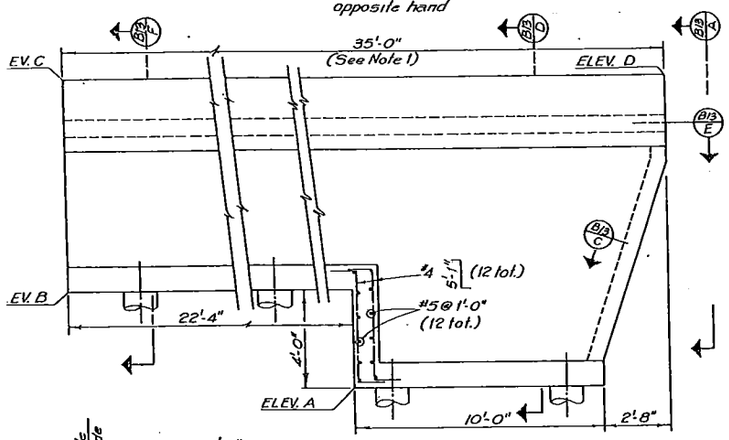

ELEVATION

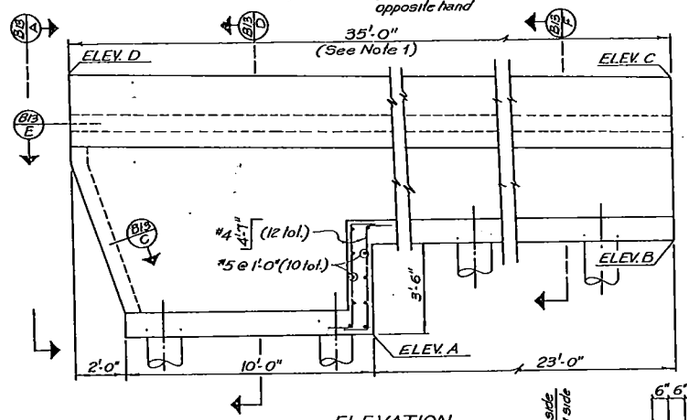

ELEVATION

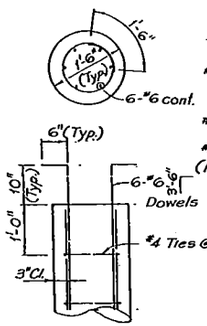

CAISSON REINF. DETAIL

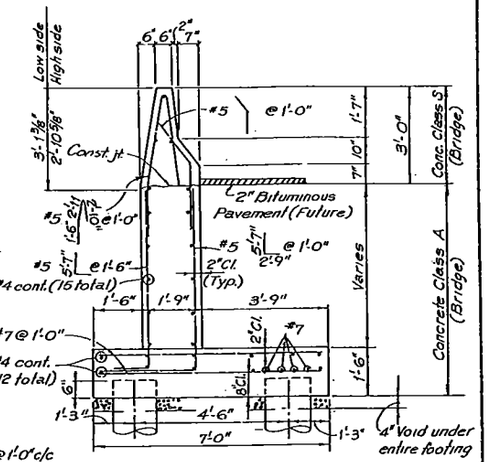

B13 F SECTION

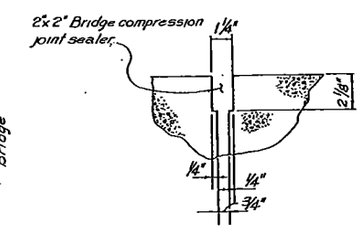

B13 E SECTION

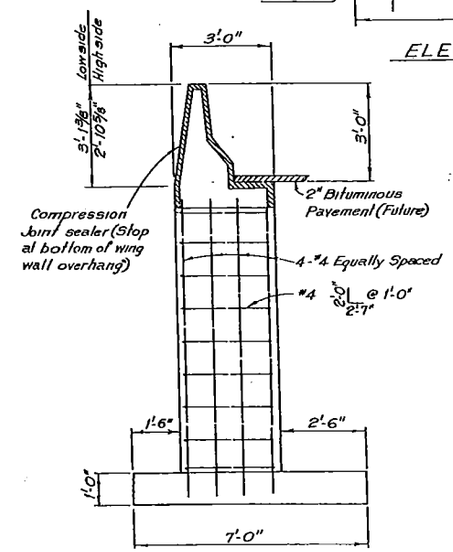

B13 A SECTION

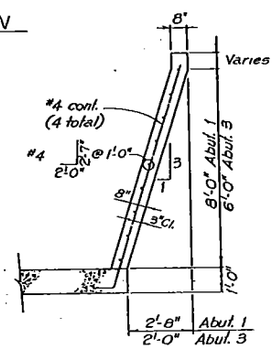

B13 B SECTION

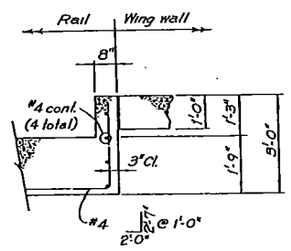

B13 C SECTION

NOTE: 1) All footings are level.
2) Top of rail between elev. D and elev. C follows vertical curve on SH470 Profile.

TABLE OF ELEVATIONS

POINT	Structure No. F-16-MG				Structure No. F-16 MH			
	Abut. 1		Abut. 3		Abut. 1		Abut. 3	
	So. Wing	No. Wing	So. Wing	No. Wing	So. Wing	No. Wing	So. Wing	No. Wing
A	5572.29	5569.48	5571.42	5568.21	5567.27	5564.38	5565.90	5562.59
B	5576.29	5573.48	5574.92	5571.71	5571.27	5568.38	5569.40	5566.09
C	5585.45	5582.89	5581.95	5578.91	5580.51	5577.88	5576.35	5573.20

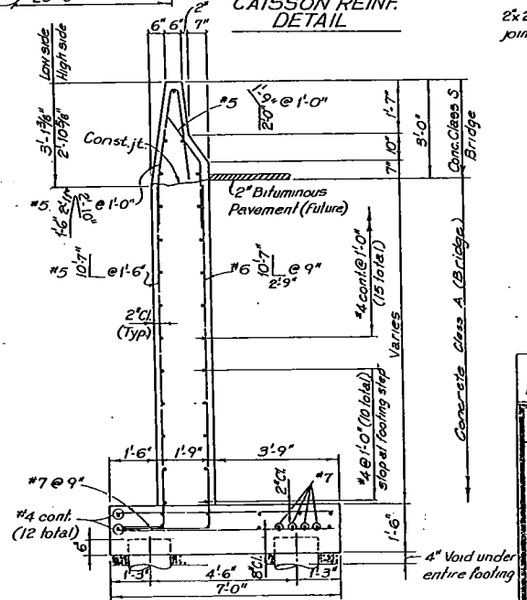

B-13 SECTION

KKBNA, INC. CONSULTING ENGINEERS
WHEAT RIDGE, COLORADO

DIVISION OF HIGHWAYS
SH 470 OVER WADSWORTH BOULEVARD

RETAINING WALL DETAILS

Designer T. Mellon		Structure Numbers	F-16-MG F-16-MH
Detailer B. Cox			
Drawing Number B 13	of 30	Drawings	

AS CONSTRUCTED		
NO REVISIONS 12-1-67	REVISED	VOID

FEDERAL ROAD REGION NO.	DIVISION	PROJ NO.	SHEET NO.	TOTAL SHEETS
VIII	COLORADO	IXFU 470-1(42) IXFU 470-1(35)	46	211

REVISIONS		

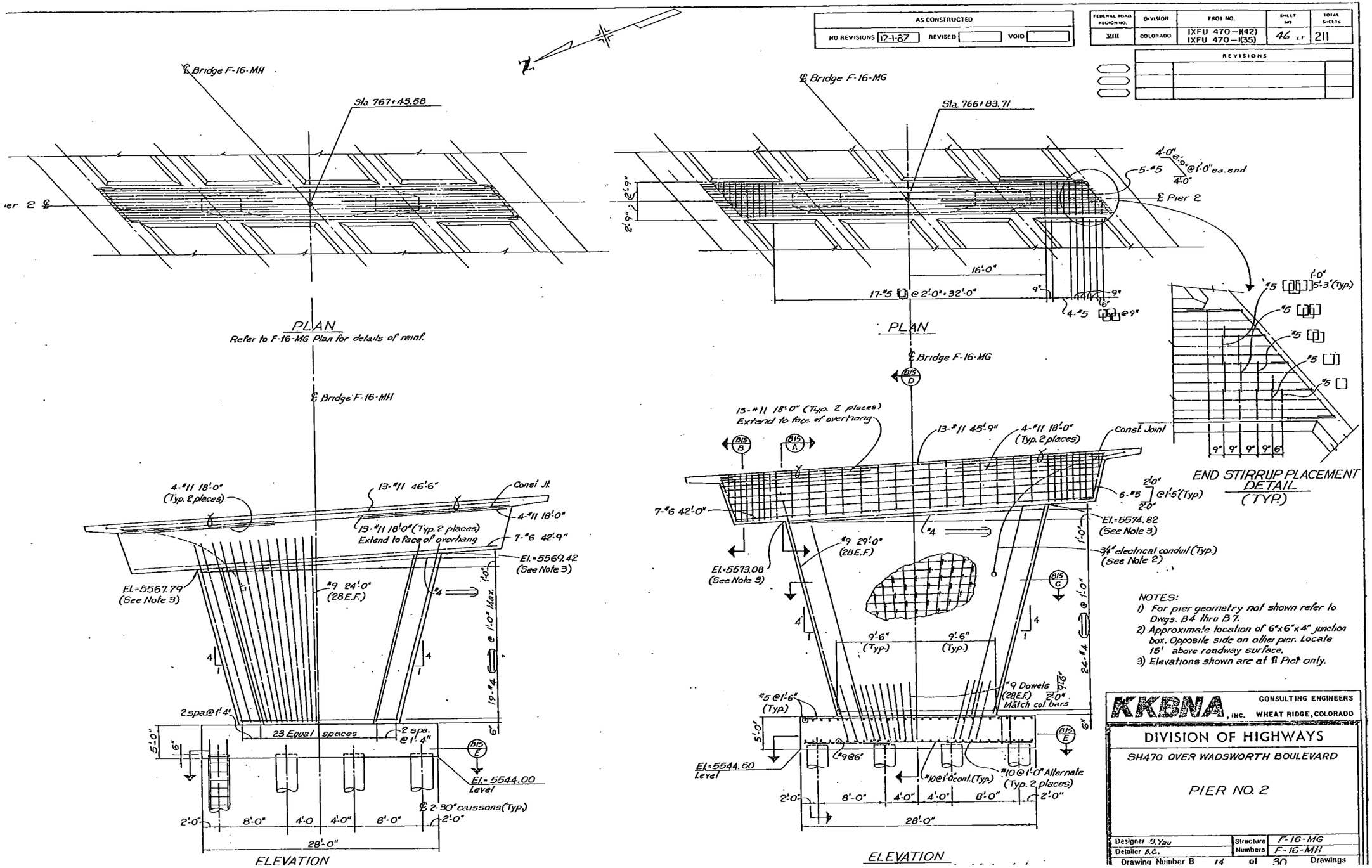

NOTES:
1) For pier geometry not shown refer to Dwgs. B4 thru B7.
2) Approximate location of 6"x6"x4" junction box. Opposite side on other pier. Locate 16' above roadway surface.
3) Elevations shown are at ℄ Pier only.

KKBNA, INC. CONSULTING ENGINEERS WHEAT RIDGE, COLORADO

DIVISION OF HIGHWAYS

SH470 OVER WADSWORTH BOULEVARD

PIER NO. 2

Designer S. You		Structure Numbers	F-16-MG
Detailer B.C.			F-16-MH

Drawing Number B 14 of 30 Drawings

AS CONSTRUCTED			
NO REVISIONS	12-1-87	REVISED	VOID

FEDERAL ROAD REGION NO.	DIVISION	PROJ. NO.	SHEET NO.	TOTAL SHEETS
VIII	COLORADO	IXFU 470-1(42) IXFU 470-1(35)	47	211

REVISIONS		

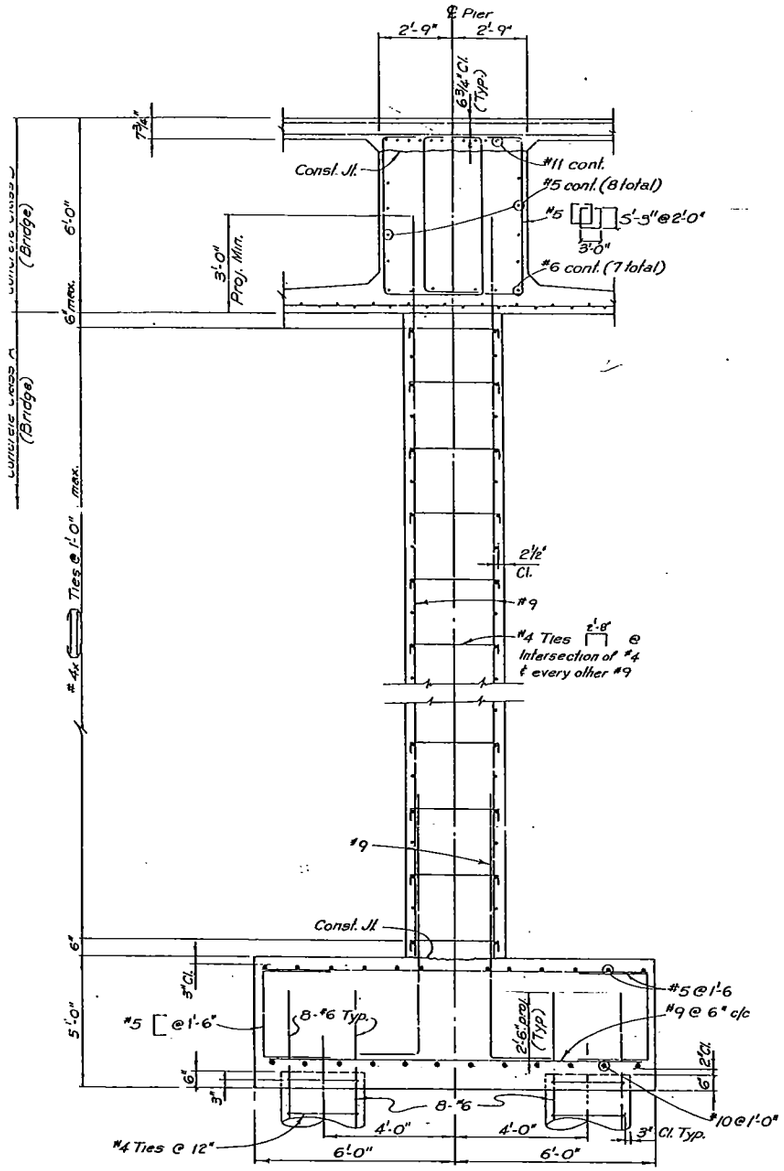

B14 D SECTION

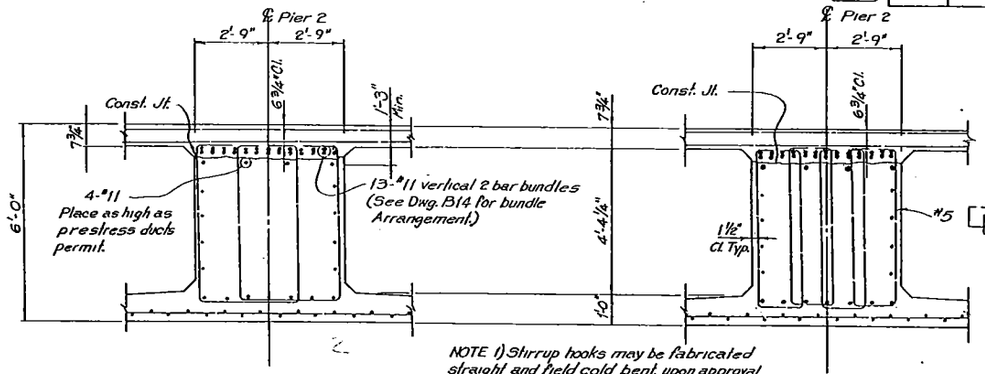

B14 A SECTION

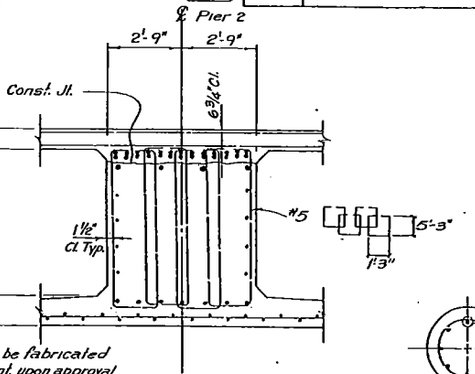

B14 B SECTION

NOTE 1) Stirrup hooks may be fabricated straight and held cold bent, upon approval of engineer.
2) Transverse deck reinforcing not shown in cap section.

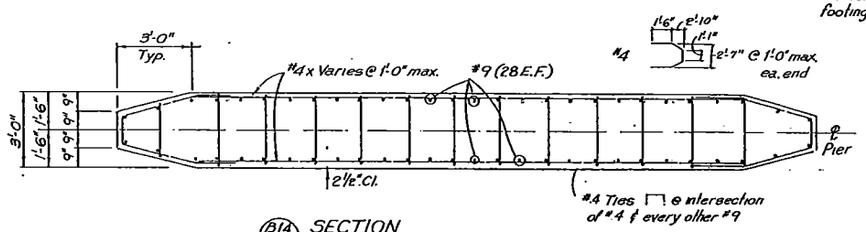

B14 C SECTION

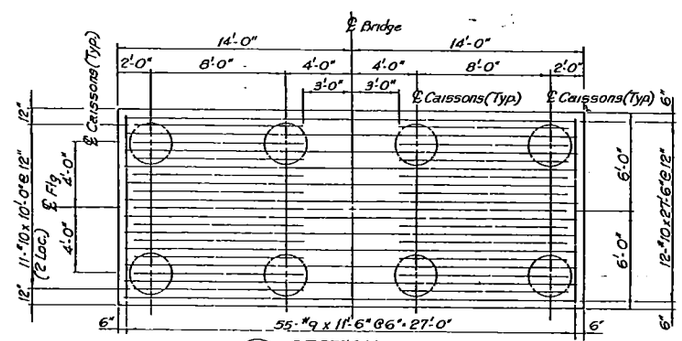

B14 E SECTION

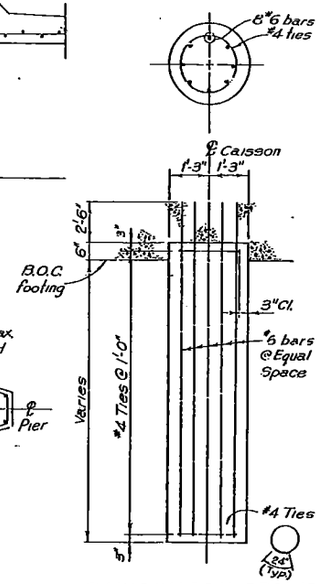

CAISSON REINFORCING

KKBNA, INC. CONSULTING ENGINEERS WHEAT RIDGE, COLORADO

DIVISION OF HIGHWAYS

SH470 OVER WADSWORTH BOULEVARD

PIER NO. 2 DETAILS

Designer	B. Yao	Structure Numbers	F-16-MG
Detailer	B. Lof.		F-16-MH

AS CONSTRUCTED			
NO REVISIONS		REVISED 12-1-87	VOID

FEDERAL ROAD REGION NO.	DIVISION	PROJ. NO.	SHEET NO.	TOTAL SHEETS
VIII	COLORADO	IXFU 470-1(42) IXFU 470-1(35)	48-11	211

REVISIONS		

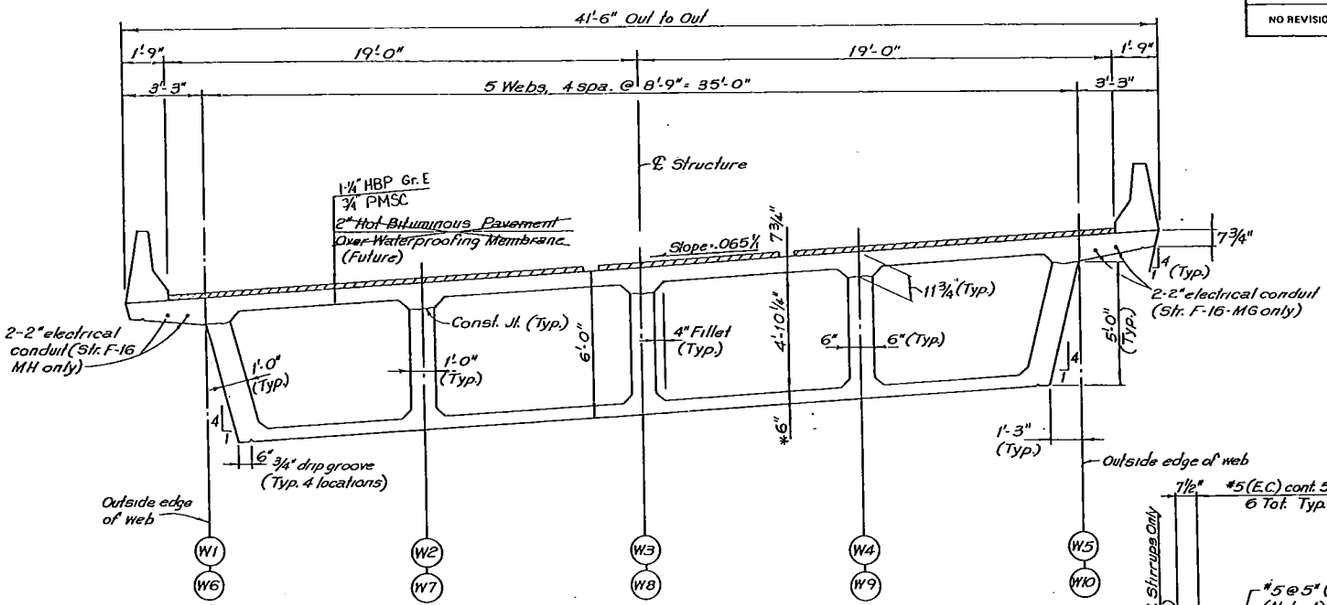

TYPICAL SECTION

* Varies @ Pier 2 Flare See Dwg. B17

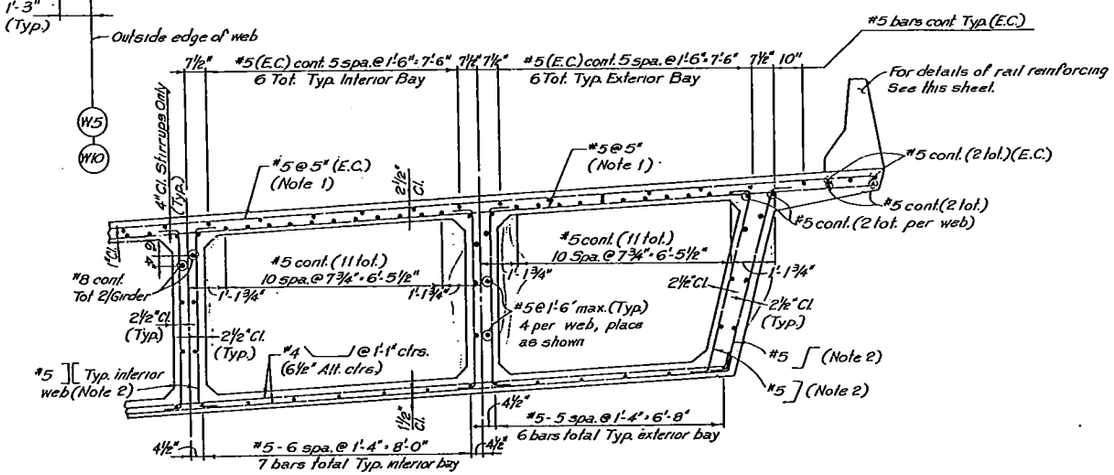

REINFORCING DETAIL

NOTES:
1) Place transverse reinforcement radially. Measure spacing along ℄ Bridge. Refer to Dwg. B-18
2) Refer to Dwg. B17 for stirrup spacing.

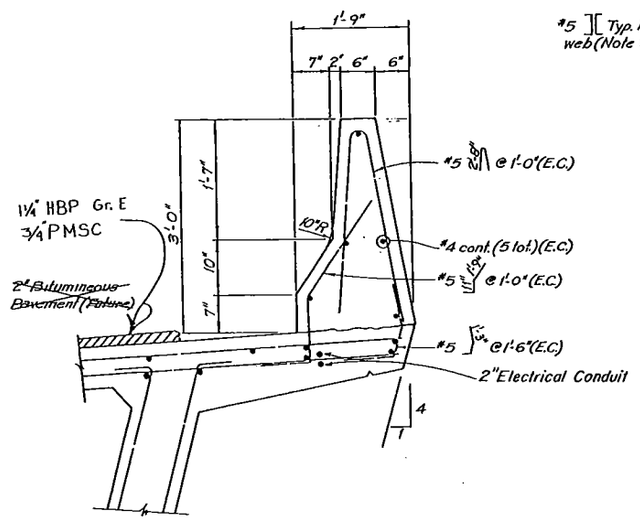

RAIL REINFORCING DETAIL

KKBNA, INC. CONSULTING ENGINEERS WHEAT RIDGE, COLORADO

DIVISION OF HIGHWAYS

SH470 OVER WADSWORTH BOULEVARD

SUPERSTRUCTURE DETAILS NO. 1

Designer T. Mellott		Structure Numbers	F-16-MG
Detailer B. Cox			F-16-MH
Drawing Number B-16	of 80	Drawings	

AS CONSTRUCTED		
NO REVISIONS 12-1-87	REVISED	VOID

FEDERAL ROAD REGION NO.	DIVISION	PROJ. NO.	SHEET NO.	TOTAL SHEETS
VIII	COLORADO	IXFU 470-1(42) IXFU 470-1(35)	49	211

REVISIONS		

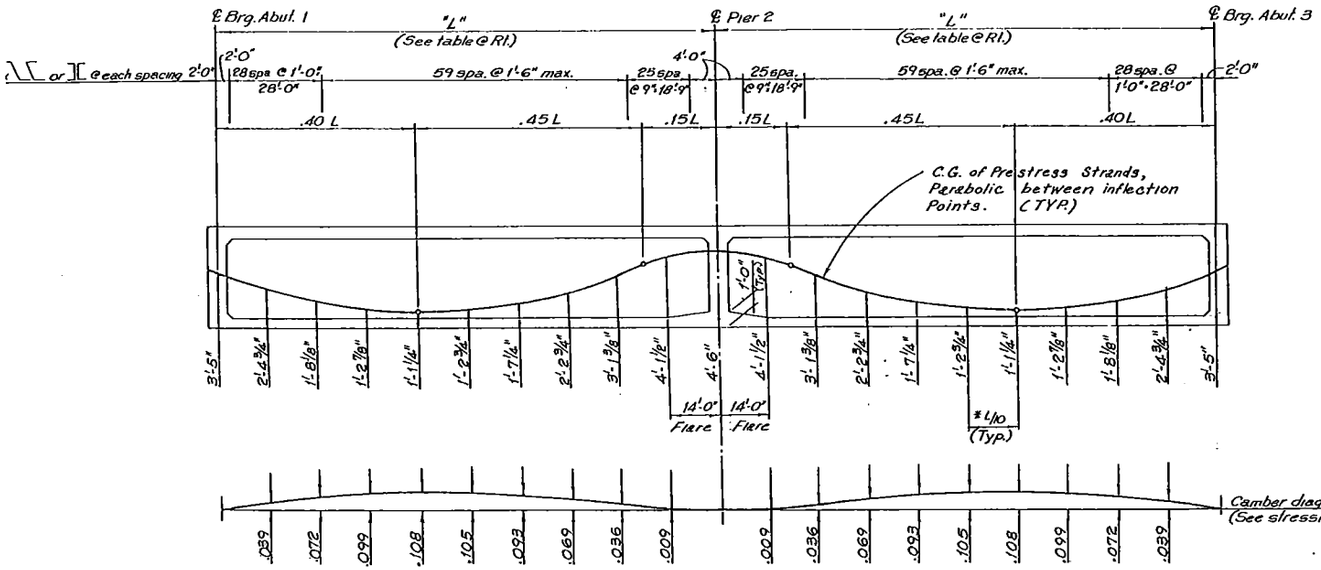

WEB ELEVATION - F-16-MH

L/10 Equal spacing

STRUCTURE No. F-16-MH			
Web No.	Span No.	L = Web Span length (Ft.)	L/10 (Ft.)
*W1	1	140.62	14.06
	2	140.75	14.07
W2	1	140.31	14.03
	2	140.37	14.04
W3	1	140.00	14.00
	2	140.00	14.00
W4	1	139.70	13.97
	2	139.63	13.96
*W5	1	139.40	13.94
	2	139.27	13.93

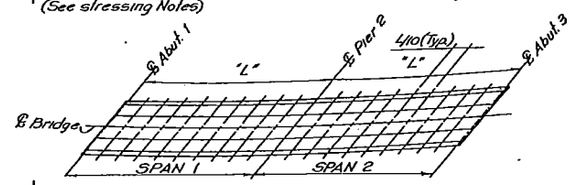

L/10 LOCATION DIAGRAM

See Construction Layout Dwg. B4 & B5 for web locations.

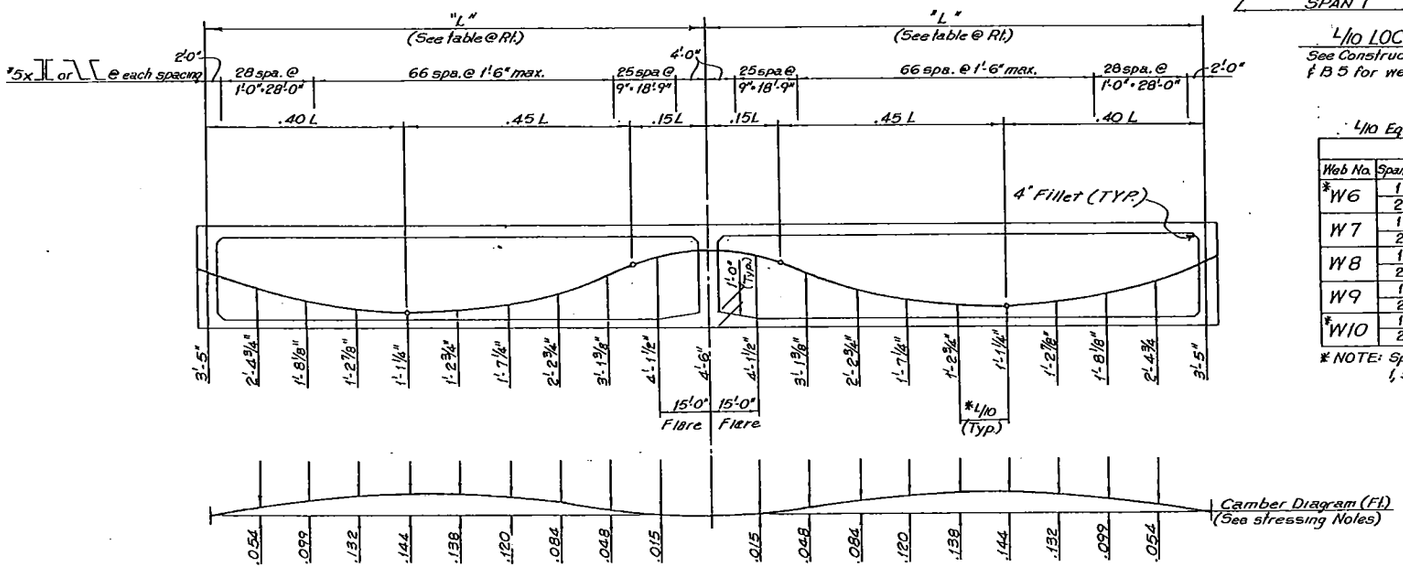

WEB ELEVATION - F-16-MG

L/10 Equal spacing

STRUCTURE No. F-16-MG			
Web No.	Span No.	L = Web Span length (Ft.)	L/10 (Ft.)
*W6	1	150.59	15.06
	2	150.72	15.07
W7	1	150.29	15.03
	2	150.36	15.04
W8	1	150.00	15.00
	2	150.00	15.00
W9	1	149.71	14.97
	2	149.65	14.96
*W10	1	149.43	14.94
	2	149.30	14.93

* NOTE: Spacing is at outside edge of Webs 1, 5, 6 & 10

STRESSING NOTES:

JACKING FORCE

P Jack (F-16-MH) = 9912 kips
P Jack (F-16-MG) = 11417 kips
Total jacking force at jacking ends;

$$A_s = \frac{P\ Jack}{.75 F_s'}$$

$F_s' = 270$ ksi

CONCRETE

$F_c' = 4500$ psi at 28 days.
$F_{ci}' = 4000$ psi at time of stressing

PRESTRESSING STEEL

At the contractor's option, the tensioning force may vary ±5% from the theoretical force per girder provided the total force is obtained and is distributed symmetrically about the ℄ of the typical section.

GENERAL

Design is based on $\mu = 0.25$ and $K = 0.0002$. P Jack specified at the jacking ends includes friction losses and provisions for an additional 31 ksi loss in stress for F-16-MH (32 ksi for F-16-MG). Tendon to be jacked to $0.75 F_s'$ and anchored at an equivalent anchor set = 5/8".
Contractor to submit elongation and jacking calculations based on $\mu\alpha + KL = 0.0937$ for F-16-MH (0.0913 for F-16-MG), and initial stress at Pier 2 = 0.9181 times jacking stress for F-16-MH (0.9190 for F-16-MG).

One end stressing is permissible, if approximately half of the tendons (± 10%) are stressed from each end.

Camber diagrams include dead load and prestress deflection and creep, but does not include allowance for falsework settlement.

KKBNA, INC. CONSULTING ENGINEERS WHEAT RIDGE, COLORADO

DIVISION OF HIGHWAYS

SH470 OVER WADSWORTH BOULEVARD

SUPERSTRUCTURE DETAILS NO. 2

Designer T. Melton	Structure Numbers	F-16-MG
Detailer B. Cox		F-16-MH
Drawing Number B-17 of 30 Drawings		

AS CONSTRUCTED		
NO REVISIONS 12-1-87	REVISED	VOID

FEDERAL ROAD REGION NO.	DIVISION	PROJ. NO.	SHEET NO.	TOTAL SHEETS
VIII	COLORADO	IXFU 470-1(42) IXFU 470-1(35)	50	211

REVISIONS		

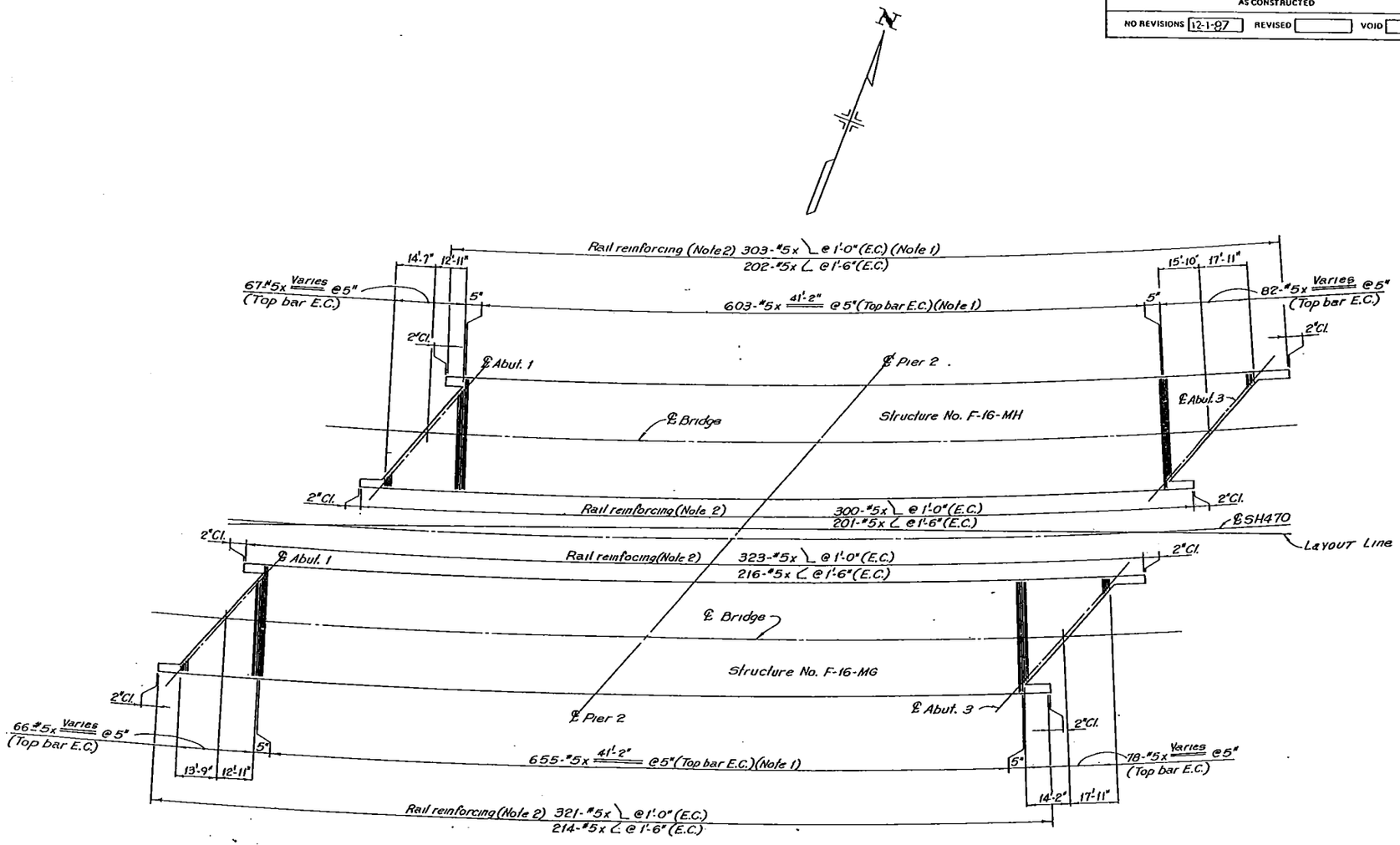

TOP DECK REINFORCING

NOTES:
1) Place transverse reinforcement radially. Measure spacing along ℄ Bridge.
2) Refer to Dwg. B16 for details of rail reinforcing.

KKBNA, INC. CONSULTING ENGINEERS
WHEAT RIDGE, COLORADO

DIVISION OF HIGHWAYS

SH470 OVER WADSWORTH BOULEVARD

SUPERSTRUCTURE DETAILS
NO. 3

Designer T. Mellon	Structure Numbers	F-16-MG
Detailer B. Cox		F-16-MH

AS CONSTRUCTED		
NO REVISIONS 12-1-87	REVISED	VOID

FEDERAL ROAD REGION NO.	DIVISION	PROJ. NO.	SHEET NO.	TOTAL SHEETS
VIII	COLORADO	IXFU 470-1 (42) IXFU 470-1 (35)	51	211

REVISIONS		

BRIDGE STANDARD 73

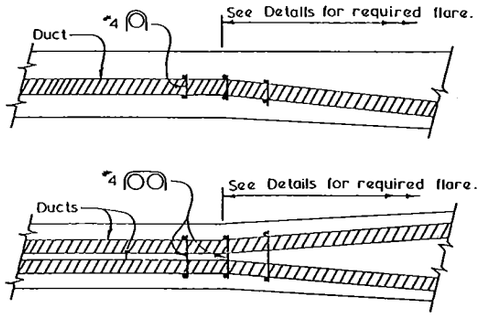

PLAN VIEWS

Provide #4 ties for each pair of ducts, or single ducts, tie to three stirrups at beginning of duct flare.

ADDITIONAL REINFORCEMENT AT FLARE OF DUCTS

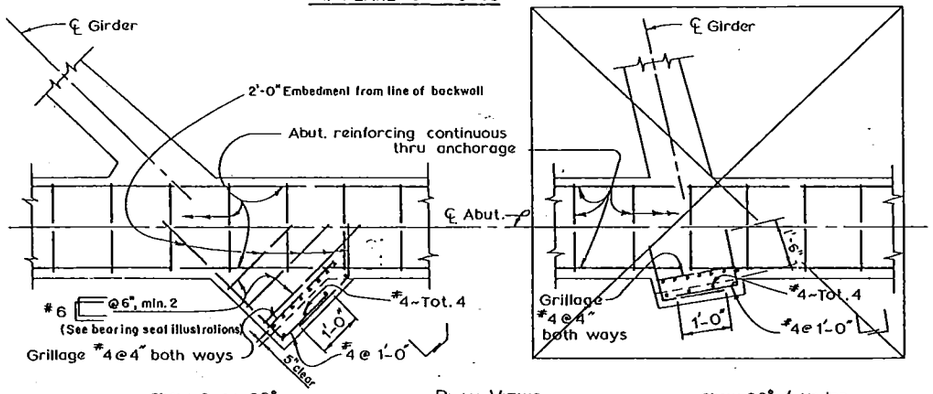

Skew Over 20° — PLAN VIEWS — Skew 20° & Under

BEARING SEAT FOR PRESTRESSED ANCHORAGE AT ABUTMENTS

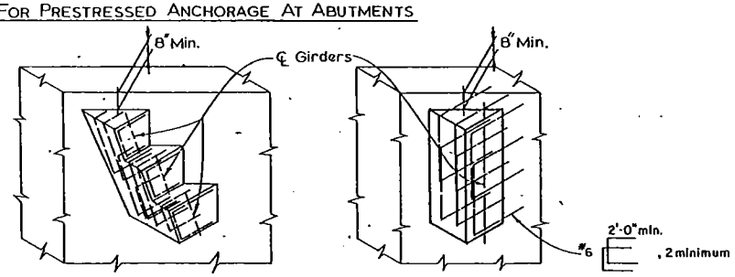

Ext. Sloping Girder — Vertical Girder

TYPICAL BEARING SEAT ILLUSTRATIONS

Details may be modified to specific anchorage.

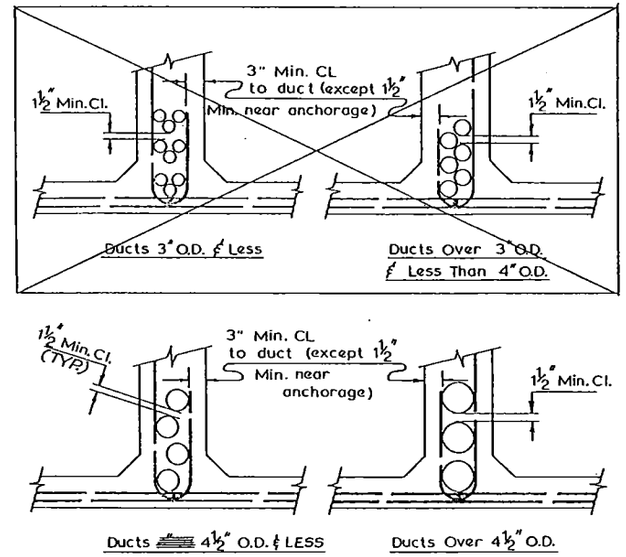

CLEARANCE REQUIREMENTS FOR DUCTS

1. DUCT PATTERNS SHOWN ARE FOR A 12" WIDE GIRDER STEM; FOR OTHER WIDTHS THE MINIMUM CLEARANCES MUST BE MAINTAINED.
2. GIRDER STIRRUPS MUST BE BENT TO FIT THE DUCT SIZE USED, OR U STIRRUPS MAY BE USED.
3. APPROVAL OF THE ENGINEER IS REQUIRED FOR DEVIATIONS.

NOTES

RECESS FOR ANCHORAGE TO BE FILLED WITH CONCRETE TO PROVIDE A MINIMUM OF 1-1/2" COVER.

EDGE DISTANCE OF BEARING PLATES SHALL BE : 3" MINIMUM.

DISTRIBUTION OF PRESTRESSING FORCE:

AT THE CONTRACTOR'S OPTION, THE PRESTRESSING FORCE MAY VARY 5% FROM THE THEORETICAL FORCE PER GIRDER PROVIDED THE TOTAL FORCE IS OBTAINED AND IS DISTRIBUTED SYM. ABOUT THE CENTERLINE OF THE TYPICAL SECTION.

STRESSING SEQUENCE:

NO MORE THAN 1/2 OF THE PRESTRESSING FORCE IN ANY GIRDER MAY BE STRESSED BEFORE AN EQUAL FORCE IS STRESSED IN THE ADJACENT GIRDERS. AT NO TIME DURING THE STRESSING OPERATIONS WILL MORE THAN 1/6 OF THE TOTAL PRESTRESSING FORCE BE APPLIED ECCENTRICALLY ABOUT THE CENTERLINE OF THE STRUCTURE.

GIRDER STEM SHALL BE FLARED NEAR ANCHORAGE TO PROVIDE A MINIMUM OF 1-1/2" CONCRETE COVERING THE DUCTS. FLARE MAY BE ON ONE SIDE OF THE GIRDER ONLY.

BAR REINFORCEMENT INTERFERING WITH THE PRESTRESSING TENDON ALIGNMENT SHALL BE ADJUSTED AS APPROVED BY THE ENGINEER.

GRILLAGE SHOWN IS MINIMUM REQUIRED AND MAY BE INCREASED IN ACCORDANCE WITH MANUFACTURERS RECOMMENDATIONS.

DIVISION OF HIGHWAYS

SH470 OVER WADSWORTH BOULEVARD

CAST-IN-PLACE PRESTRESSED GIRDER DETAILS

Designer	T. MELTON	Structure Numbers	F-16-MG
Detailer	W.R. HESSLER		F-16-MH

AS CONSTRUCTED			
NO REVISIONS	12-1-87	REVISED	VOID

FEDERAL ROAD REGION NO	DIVISION	PROJ. NO	SHEET NO	TOTAL SHEETS
VIII	COLORADO	IXFU 470-1(42) IXFU 470-1(35)	52	211

REVISIONS		

BRIDGE STANDARD 71

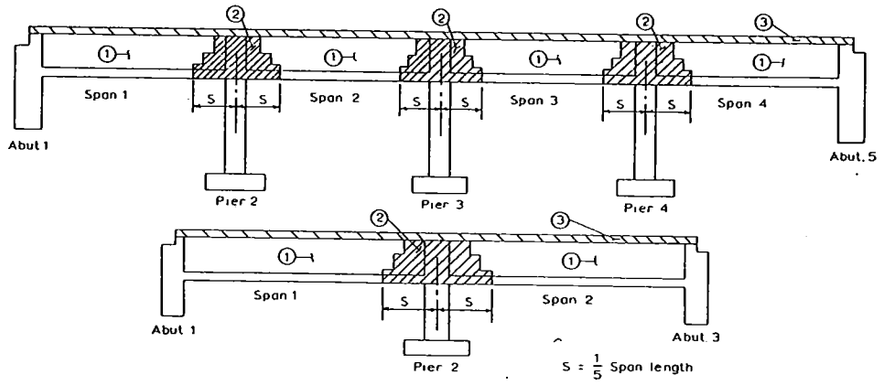

BOX GIRDER SUPERSTRUCTURE PLACING SCHEDULE

Note Numbers ① and ② indicate sequence of placing bottom slab and girder web concrete when each section constitutes a separate pour. 3 may be placed continuously or in parts, as approved by the Engineer, providing no transverse construction joints fall within the 2 areas. Contractor may submit an alternate placing schedule to the Engineer for approval.

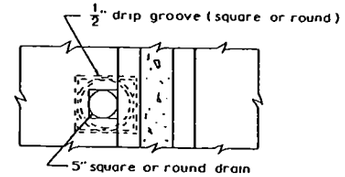

PLAN

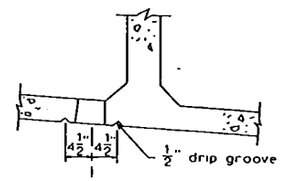

ELEVATION

BOTTOM SLAB DRAIN DETAIL

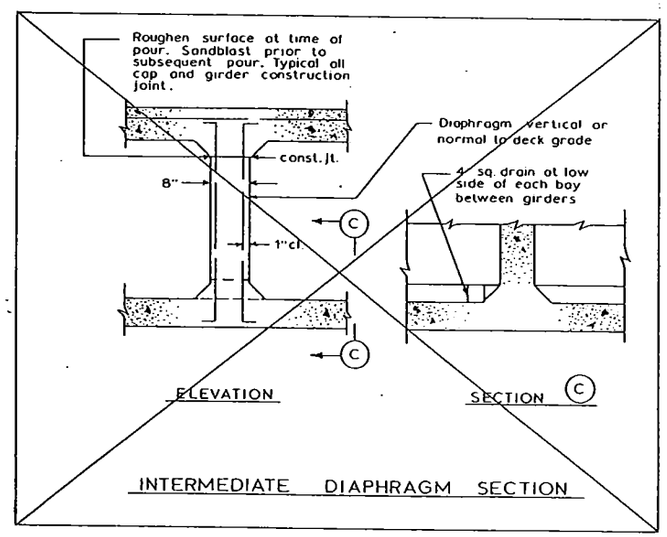

INTERMEDIATE DIAPHRAGM SECTION

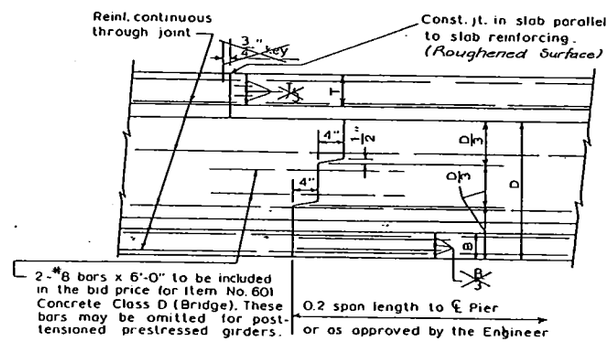

TRANSVERSE GIRDER CONSTRUCTION JOINT

T = Top slab thickness
B = Bottom slab thickness

DIVISION OF HIGHWAYS

SH470 - OVER WADSWORTH BOULEVARD

BOX GIRDER DETAILS

Designer T. Melton | Structure F-16-MG

AS CONSTRUCTED			
NO REVISIONS	12-1-87	REVISED	VOID

FEDERAL ROAD REGION NO	DIVISION	PROJ NO.	SHEET NO.	TOTAL SHEETS
VIII	COLORADO	IXFU 470-1(42) IXFU 470-1(35)	53	211

REVISIONS		

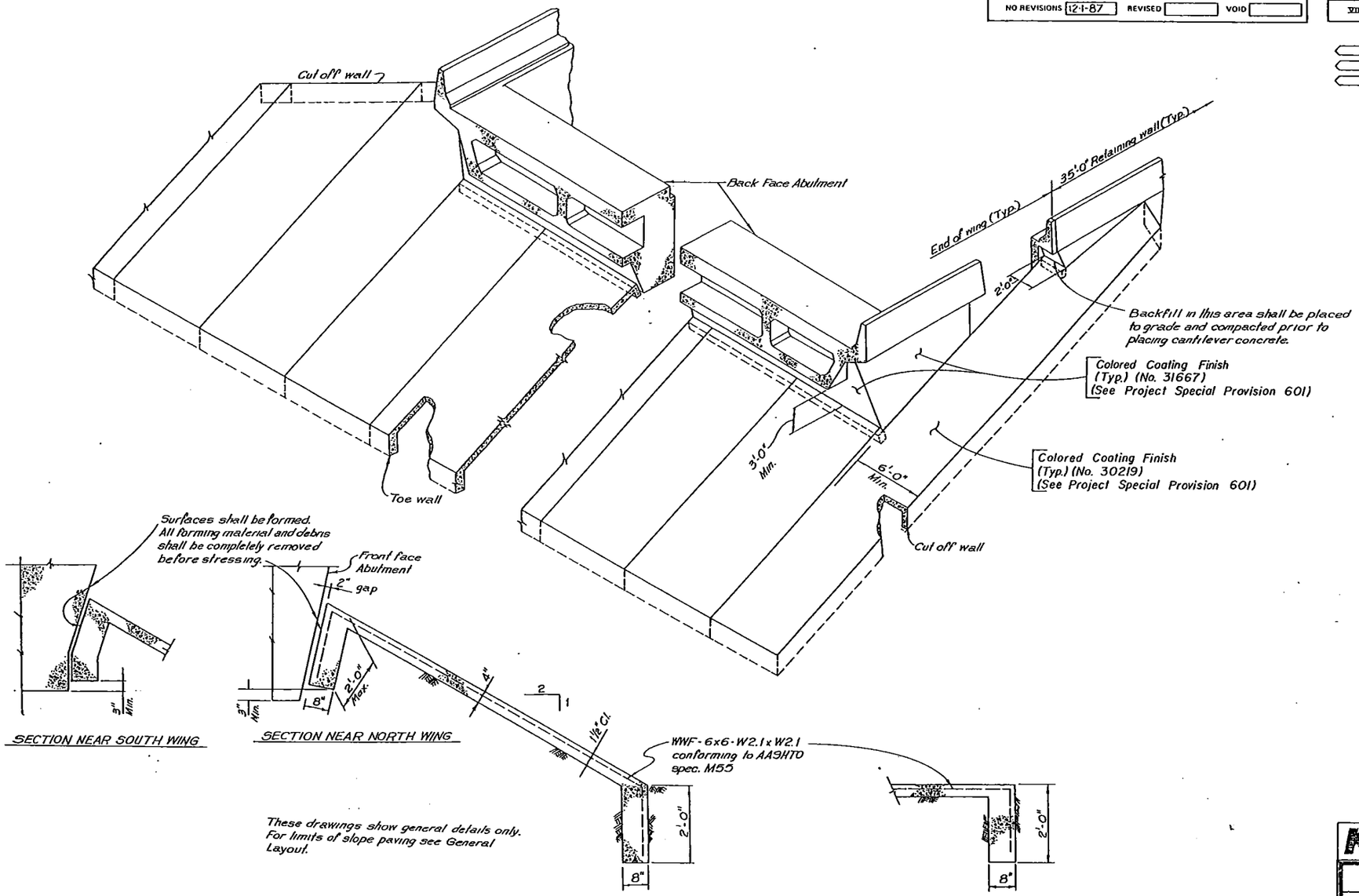

SECTION NEAR SOUTH WING

SECTION NEAR NORTH WING

These drawings show general details only. For limits of slope paving see General Layout.

TYPICAL SECTION THRU SLOPE PAVING

SECTION THRU CUT-OFF WALL

NOTES:

Slope paving shall be poured in 10ft. transverse sections with a tooled construction joint at each section.

Wire fabric shall be 2" from the end of joints and shall lap 8" at splices.

Where slope or berm paving butts against structural concrete, separate with 1" expansion joint material.

Expansion joint material and welded wire fabric shall not be paid for separately, but shall be included in the work.

Structure excavation for concrete slope and ditch paving shall be limited to the actual volume occupied by the slope paving concrete.

Do not place slope paving concrete until stressing is completed.

All exposed concrete surfaces down to 1'-0" below finished grade shall be finished with a class I finish, followed by an application of colored coating meeting the requirements in Special Provision of Revision of Section 601, Structural Concrete (Coating).

KKBNA, INC. CONSULTING ENGINEERS WHEAT RIDGE, COLORADO

DIVISION OF HIGHWAYS

SH470 OVER WADSWORTH BOULEVARD

SLOPE PAVING DETAILS

Designer	Mellon	Structure Numbers	F-16-MG
Detailer	B. Cox		F-16-MH

AS CONSTRUCTED			
NO REVISIONS		REVISED 12-1-87	VOID

FEDERAL ROAD REGION NO.	DIVISION	PROJ. NO.	SHEET NO.	TOTAL SHEETS
VIII	COLORADO	IXFU 470-1(42) IXFU 470-1(35)	54	211

REVISIONS		

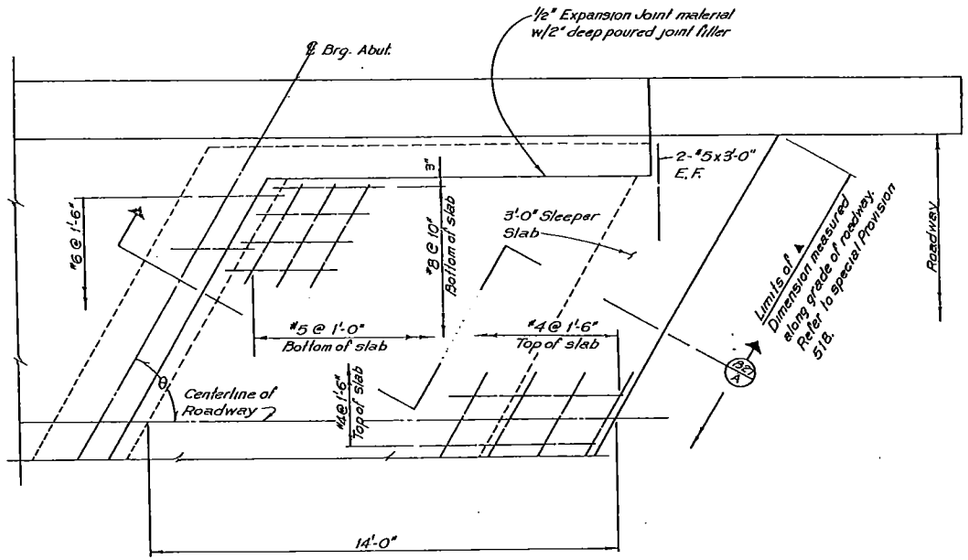

PLAN

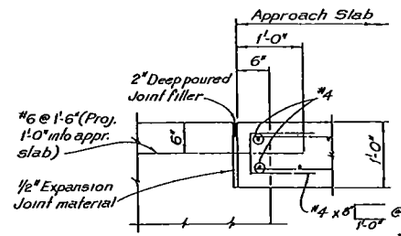

DETAIL B

GENERAL NOTES:

Concrete for approach slab may be Class A

1/2" expansion joint material shall meet AASHTO specifications M213.

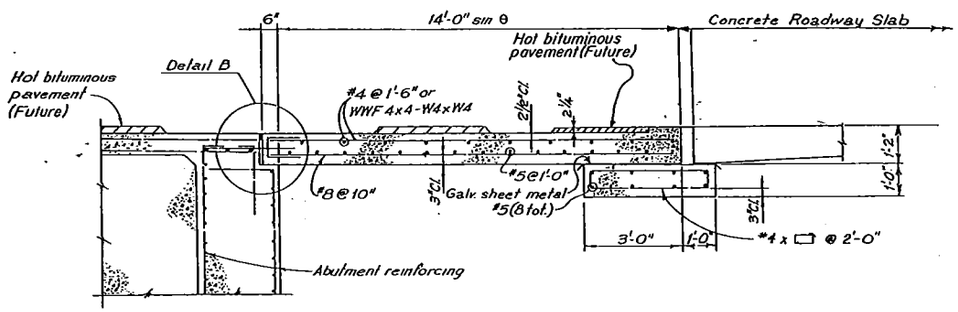

(B27) (A) SECTION
With Concrete Roadway Slab

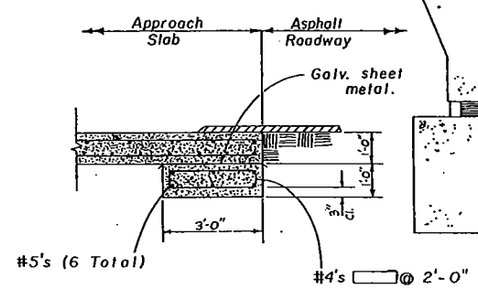

(B27) (A) SECTION
With Asphalt Roadway

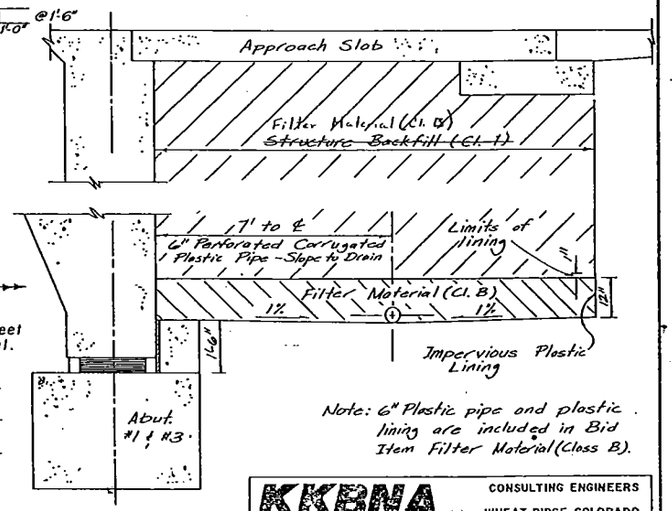

Note: 6" Plastic pipe and plastic lining are included in Bid Item Filter Material (Class B).

KKBNA, INC. CONSULTING ENGINEERS WHEAT RIDGE, COLORADO

DIVISION OF HIGHWAYS

SH470 OVER WADSWORTH BOULEVARD

APPROACH SLAB DETAILS

Designer	T. Melton	Structure Numbers	F-16-MG
Detailer	B. Cox		F-16-MH

Drawing Number B 22 of 30 Drawings

AS CONSTRUCTED		
NO REVISIONS 12-1-87	REVISED	VOID

FEDERAL ROAD REGION NO	DIVISION	PROJ. NO.	SHEET NO.	TOTAL SHEETS
VIII	COLORADO	IXFU 470-1(42) IXFU 470-1(35)	55	211

REVISIONS		

BRIDGE STANDARD 103

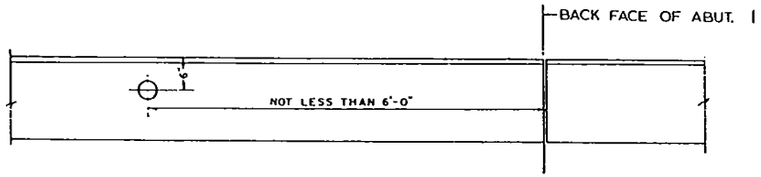

PLAN

Note: Where 1'-3" safety curbs are not used place marker in center of curb.

ELEVATION

NOTES:

All work shall be done in accordance with Standard Specifications applicable to the project.

All exposed surfaces of the bronze tablet are to be ground to a smooth surface. All letters are to be depressed a minimum of 1/16 inch. Information on the bronze tablet indicated by pin lines is to be stamped in field by the engineering party after marker is placed. 3/16 inch letters and figures to be used. Project designation on tablets shall be properly shown (i.e.; I for Fed. Aid Interstate, F for Fed. Aid Primary, S for Fed. Aid Secondary, etc. B G for State Projects. See details below).

Bronze Bench Mark Tablets will be furnished by the Division at no expense to the Contractor.

Installation of Bronze Bench Mark Tablets will not be paid for directly, but shall be included in the price bid for Concrete

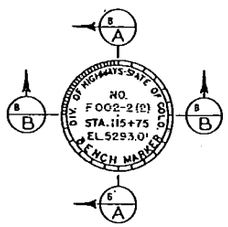

One marker to be placed on Bridges as shown. The station shown on marker shall be the centerline stationing directly opposite the marker.

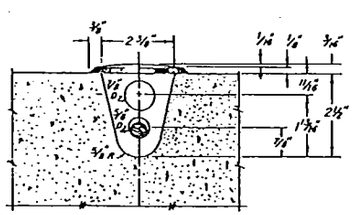

SECTION B/B

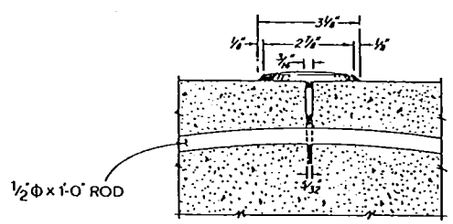

SECTION B/A

BENCH MARK DETAILS

DIVISION OF HIGHWAYS

SH 470 OVER WADSWORTH BOULEVARD

BENCH MARK

Designer M. Van Nuffel	Structure Numbers	F-16-MG
Detailer BRL		F-16-MH

AS CONSTRUCTED		
NO REVISIONS 12-1-87	REVISED	VOID

FEDERAL ROAD REGION NO.	DIVISION	PROJ. NO.	SHEET NO.	TOTAL SHEETS
VIII	COLORADO	IXFU 470-1(42) IXFU 470-1(35)	56 SC	211

REVISIONS		

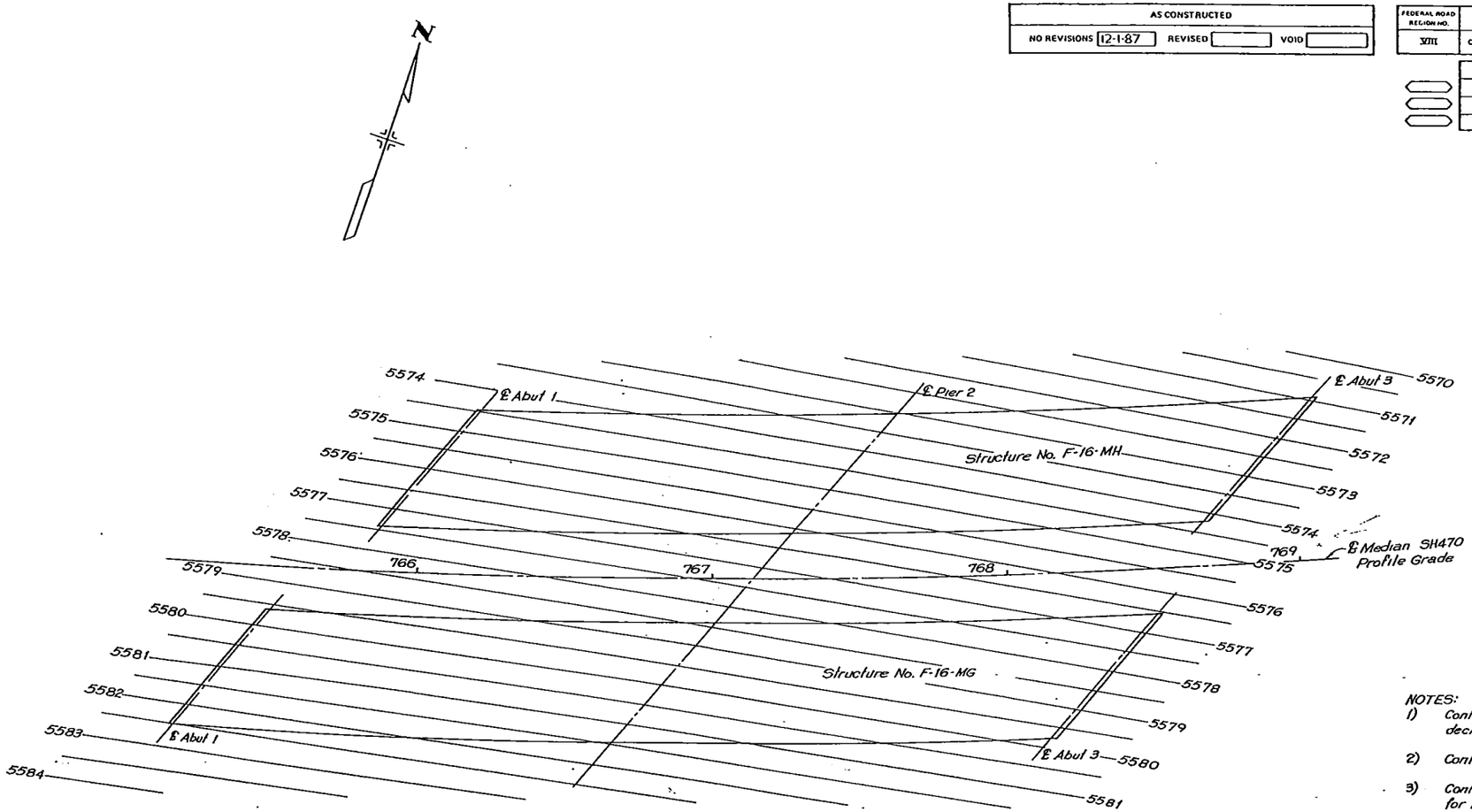

DECK CONTOURS

NOTES:

1) Contour elevations are top of concrete deck, 0.1667' below finished grade.

2) Contour interval = 0.5'.

3) Contours do not include camber or allowance for falsework settlement. (See dwg. B17 for camber diagrams.)

4) A deck contour drawing having a scale of 1" = 4'-0" and a contour interval of 0.10' will be supplied for use during construction.

KKBNA, INC. CONSULTING ENGINEERS WHEAT RIDGE, COLORADO

DIVISION OF HIGHWAYS

SH470 OVER WADSWORTH BOULEVARD

DECK CONTOURS

Designer T. Melton	Structure Numbers	F-16-MG
Detailer B. Cox		F-16-MH

ION	OFFSET	ELEVATION		COORDINATES FROM LAYOUT LINE: OFFSET X	COORDINATES FROM LAYOUT LINE: ORDINATE Y	BENT LINE LENGTH FROM Y-AXIS OR OFFSET FROM EXTERIOR GIRDER	GIRDER LINE LENGTH
LINE: NORTH OUTSIDE EDGE OF DECK							
19.0313	-56.7500	5574.4668		-54.2177	59.5553	-71.4923	12.5731
20.6672	-56.7500	5574.4545		-54.1648	61.1579	-71.4225	14.1827
27.8461	-56.7500	5574.3997		-53.9436	68.1911		21.2193
35.0249	-56.7500	5574.3432		-53.7400	75.7248		28.2560
42.2038	-56.7500	5574.2849		-53.5541	82.2590		35.2926
49.3526	-56.7500	5574.2249		-53.3857	89.2936		42.3293
56.5615	-56.7500	5574.1631		-53.2350	96.3287		49.3655
63.7404	-56.7500	5574.0997		-53.1020	103.3640		56.4026
70.9192	-56.7500	5574.0345		-52.9865	110.3997		63.4392
78.0981	-56.7500	5573.9676		-52.8887	117.4357		70.4758
85.2769	-56.7500	5573.8989		-52.6085	124.4719		77.5125
92.4558	-56.7500	5573.8285		-52.7460	131.5083		84.5491
99.6346	-56.7500	5573.7564		-52.7011	138.5448		91.5858
06.8135	-56.7500	5573.6826		-52.6738	145.5814		98.6224
13.9924	-56.7500	5573.6070		-52.6642	152.6180		105.6591
21.1712	-56.7500	5573.5298		-52.6721	159.6546		112.6957
28.3501	-56.7500	5573.4507		-52.6978	166.6912		119.7324
35.5289	-56.7500	5573.3700		-52.7410	173.7278		126.7690
42.7078	-56.7500	5573.2875		-52.8019	180.7641		133.8057
49.8866	-56.7500	5573.2033		-52.8804	187.8004		140.8423
57.0655	-56.7500	5573.1174		-52.9766	194.8363		147.8790
64.2444	-56.7500	5573.0297		-53.0903	201.8721	-70.0057	154.9156
71.4316	-56.7500	5572.9402		-53.2219	208.9157		161.9605
78.6108	-56.7500	5572.8490		-53.3711	215.9589		169.0053
85.8060	-56.7500	5572.7561		-53.5381	223.0018		176.0501
92.9932	-56.7500	5572.6614		-53.7226	230.0442		183.0945
00.1904	-56.7500	5572.5649		-53.9249	237.0861		190.1392
07.3676	-56.7500	5572.4668		-54.1449	244.1275		197.1846
14.5548	-56.7500	5572.3669		-54.3824	251.1683		204.2254
21.7420	-56.7500	5572.2653		-54.6376	258.2065		211.2743
28.9292	-56.7500	5572.1619		-54.9105	265.2480		218.3191
36.1164	-56.7500	5572.0569		-55.2011	272.2869		225.3639
43.3036	-56.7500	5571.9500		-55.5093	279.3250		232.4087
50.4708	-56.7500	5571.8415		-55.8352	286.3622		239.4536
57.6790	-56.7500	5571.7312		-56.1787	293.3987		246.4984
64.8652	-56.7500	5571.6192		-56.5399	300.4343		253.5432
72.0524	-56.7500	5571.5055		-56.9188	307.4669		260.5881
79.2396	-56.7500	5571.3900		-57.3152	314.5025		267.6329
86.4268	-56.7500	5571.2728		-57.7294	321.5352		274.6777
93.6140	-56.7500	5571.1538		-58.1611	328.5668		281.7225
1.8012	-56.7500	5571.0332		-58.6105	335.5972		288.7674
7.9884	-56.7500	5570.9108		-59.0776	342.6766	-77.9006	295.8122
09.7783	-56.7500	5570.8800		-59.1966	344.3769	-78.0576	297.5666
LINE: WEB 1 NORTH OUTSIDE EDGE							
16.3720	-53.5000	5574.6977		-51.0575	56.8391	-67.3252	12.5692
18.0049	-53.5000	5574.6857		-51.0032	58.4405	-67.2536	14.1722
25.1695	-53.5000	5574.6316		-50.7756	65.4676		21.2030
32.3341	-53.5000	5574.5758		-50.5656	72.4953		28.2339
39.4987	-53.5000	5574.5183		-50.3732	79.5235		35.2647
46.6633	-53.5000	5574.4591		-50.1963	86.5521		42.2955
53.8280	-53.5000	5574.3981		-50.0411	93.5812		49.3263
60.9926	-53.5000	5574.3354		-49.9014	100.6106		56.3571
68.1572	-53.5000	5574.2710		-49.7793	107.6404		63.3879
75.3218	-53.5000	5574.2049		-49.6748	114.6705		70.4188
82.4865	-53.5000	5574.1371		-49.5878	121.7007		77.4496
89.6511	-53.5000	5574.0675		-49.5185	128.7312		84.4804
96.8157	-53.5000	5573.9962		-49.4667	135.7618		91.5112
03.9803	-53.5000	5573.9232		-49.4325	142.7926		98.5421
11.1449	-53.5000	5573.8485		-49.4159	149.8234		105.5729
18.3096	-53.5000	5573.7720		-49.4168	156.8542		112.6037
25.4742	-53.5000	5573.6938		-49.4354	163.8850		119.6345
32.6388	-53.5000	5573.6140		-49.4715	170.9157		126.6654
39.8034	-53.5000	5573.5323		-49.5253	177.9463		133.6962
46.9681	-53.5000	5573.4490		-49.5966	184.9768		140.7270
54.1327	-53.5000	5573.3640		-49.6855	192.0071		147.7578
61.2973	-53.5000	5573.2772		-49.7919	199.0371	-65.6564	154.7886
68.4669	-53.5000	5573.1886		-49.9161	206.0737		161.8263
75.6405	-53.5000	5573.0983		-50.0579	213.1099		168.8640
82.8122	-53.5000	5573.0062		-50.2173	220.1453		175.9017
89.9838	-53.5000	5572.9125		-50.3943	227.1813		182.9354
97.1554	-53.5000	5572.8170		-50.5890	234.2163		189.9771
04.3270	-53.5000	5572.7198		-50.8012	241.2508		197.0148
11.4987	-53.5000	5572.6208		-51.0311	248.2847		204.0525
18.6703	-53.5000	5572.5202		-51.2785	255.3180		211.0702
25.8419	-53.5000	5572.4178		-51.5436	262.3507		218.1279
33.0135	-53.5000	5572.3137		-51.8263	269.3828		225.1656
40.1852	-53.5000	5572.2075		-52.1266	276.4140		232.2033
7.3568	-53.5000	5572.1003		-52.4444	283.4445		239.2410
4.5284	-53.5000	5571.9910		-52.7799	290.4742		246.2787
51.7000	-53.5000	5571.8800		-53.1330	297.5031		253.3163
58.8716	-53.5000	5571.7673		-53.5036	304.5310		260.3540
76.0433	-53.5000	5571.6528		-53.8919	311.5550		267.3917
83.2149	-53.5000	5571.5366		-54.2978	318.5839		274.4294
90.3865	-53.5000	5571.4187		-54.7212	325.6099		281.4671
97.5581	-53.5000	5571.2991		-55.1622	332.6327		288.5043
04.7298	-53.5000	5571.1777		-55.6208	339.6555	-73.3425	295.5425
06.5155	-53.5000	5571.1472		-55.7377	341.4049	-73.4966	297.2949

BENT LINE DESCRIPTION OR FRACTIONAL POINT DESIGNATION	STATION	OFFSET	ELEVATION		COORDINATES FROM LAYOUT LINE: OFFSET X	COORDINATES FROM LAYOUT LINE: ORDINATE Y	BENT LINE LENGTH FROM Y-AXIS OR OFFSET FROM EXTERIOR GIRDER	GIRDER LINE LENGTH
LONGITUDINAL LINE: WEB 2								
BF ABUT 1	766+09.2527	-44.7500	5575.3181		-42.5689	49.5362	-56.1215	12.5451
CL BRG A1	766+10.6772	-44.7500	5575.3065		-42.5027	51.1343	-56.0447	14.1443
F-1	766+18.0039	-44.7500	5575.2544		-42.2542	58.1454		21.1596
F-2	766+25.1305	-44.7500	5575.2006		-42.0310	65.1578		28.1749
F-3	766+32.2571	-44.7500	5575.1452		-41.8214	72.1692		35.1902
F-4	766+39.3838	-44.7500	5575.0880		-41.6291	79.1818		42.2055
F-5	766+46.5104	-44.7500	5575.0291		-41.4543	86.1950		49.2206
F-6	766+53.6370	-44.7500	5574.9685		-41.2970	93.2085		56.2361
F-7	766+60.7637	-44.7500	5574.9062		-41.1571	100.2224		63.2515
F-8	766+67.8903	-44.7500	5574.8422		-41.0347	107.2367		70.2665
F-9	766+75.0169	-44.7500	5574.7765		-40.9297	114.2512		77.2821
F-10	766+82.1436	-44.7500	5574.7091		-40.8421	121.2660		84.2974
F-11	766+89.2702	-44.7500	5574.6400		-40.7720	128.2809		91.3127
F-12	766+96.3968	-44.7500	5574.5692		-40.7194	135.2960		98.3280
F-13	767+03.5235	-44.7500	5574.4967		-40.6842	142.3113		105.3433
F-14	767+10.6501	-44.7500	5574.4224		-40.6665	149.3265		112.3586
F-15	767+17.7767	-44.7500	5574.3465		-40.6662	156.3419		119.3739
F-16	767+24.9034	-44.7500	5574.2689		-40.6833	163.3571		126.3393
F-17	767+32.0300	-44.7500	5574.1896		-40.7180	170.3724		133.4046
F-18	767+39.1566	-44.7500	5574.1085		-40.7700	177.3875		140.4199
F-19	767+46.2833	-44.7500	5574.0258		-40.8395	184.4025		147.4352
CL PIER 2	767+53.4099	-44.7500	5573.9414		-40.9265	191.4172	-53.9663	154.4505
F-1	767+60.5400	-44.7500	5573.8552		-41.0310	198.4352		161.4652
F-2	767+67.6701	-44.7500	5573.7673		-41.1529	205.4529		168.4875
F-3	767+74.8002	-44.7500	5573.6777		-41.2923	212.4701		175.5066
F-4	767+81.9303	-44.7500	5573.5864		-41.4492	219.4871		182.5253
F-5	767+89.0603	-44.7500	5573.4934		-41.6235	226.5036		189.5440
F-6	767+96.1904	-44.7500	5573.3987		-41.8153	233.5197		196.5628
F-7	768+03.3205	-44.7500	5573.3023		-42.0246	240.5353		203.5815
F-8	768+10.4506	-44.7500	5573.2042		-42.2513	247.5503		210.6002
F-9	768+17.5807	-44.7500	5573.1043		-42.4955	254.5648		217.6189
F-10	768+24.7109	-44.7500	5573.0028		-42.7571	261.5786		224.6376
F-11	768+31.8409	-44.7500	5572.8996		-43.0362	268.5918		231.6563
F-12	768+38.9710	-44.7500	5572.7946		-43.3328	275.6042		238.6750
F-13	768+46.1010	-44.7500	5572.6880		-43.6468	282.6159		245.6937
F-14	768+53.2311	-44.7500	5572.5797		-43.9782	289.6268		252.7124
F-15	768+60.3612	-44.7500	5572.4696		-44.3271	296.6368		259.7311
F-16	768+67.4913	-44.7500	5572.3579		-44.6934	303.6460		266.7499
F-17	768+74.6214	-44.7500	5572.2444		-45.0772	310.6542		273.7686
F-18	768+81.7515	-44.7500	5572.1292		-45.4784	317.6614		280.7873
F-19	768+88.6816	-44.7500	5572.0124		-45.8971	324.6676		287.8060
CL BRG A3	768+96.0116	-44.7500	5571.8938		-46.3332	331.6727	-61.0957	294.8247
BF ABUT 3	768+97.7866	-44.7500	5571.8640		-46.4445	333.4164	-61.2424	296.5719
LONGITUDINAL LINE: WEB 3								
BF ABUT 1	766+02.1914	-36.0000	5575.9364		-34.0811	42.2478	-44.9393	12.5205
CL BRG A1	766+03.8077	-36.0000	5575.9252		-34.0191	43.8426	-44.8580	14.1166
F-1	766+10.8966	-36.0000	5575.8751		-33.7577	50.8378		21.1168
F-2	766+17.9860	-36.0000	5575.8233		-33.5137	57.8335		28.1169
F-3	766+25.0751	-36.0000	5575.7698		-33.2870	64.8299		35.1169
F-4	766+32.1642	-36.0000	5575.7146		-33.0776	71.8268		42.1170
F-5	766+39.2533	-36.0000	5575.6578		-32.8855	78.8242		49.1170
F-6	766+46.3425	-36.0000	5575.5992		-32.7107	85.8221		56.1170
F-7	766+53.4316	-36.0000	5575.5390		-32.5533	92.8204		63.1171
F-8	766+60.5207	-36.0000	5575.4771		-32.4131	99.8190		70.1171
F-9	766+67.6099	-36.0000	5575.4135		-32.2903	106.8180		77.1172
F-10	766+74.6990	-36.0000	5575.3482		-32.1848	113.8172		84.1172
F-11	766+81.7881	-36.0000	5575.2812		-32.0966	120.8167		91.1173
F-12	766+88.8773	-36.0000	5575.2126		-32.0259	127.8164		98.1173
F-13	766+95.9664	-36.0000	5575.1422		-31.9723	134.8162		105.1174
F-14	767+03.0555	-36.0000	5575.0702		-31.9360	141.8162		112.1174
F-15	767+10.1446	-36.0000	5574.9965		-31.9172	148.8162		119.1174
F-16	767+17.2338	-36.0000	5574.9211		-31.9156	155.8162		126.1175
F-17	767+24.3229	-36.0000	5574.8440		-31.9313	162.8163		133.1175
F-18	767+31.4120	-36.0000	5574.7653		-31.9644	169.8162		140.1176
F-19	767+38.5012	-36.0000	5574.6848		-32.0148	176.8161		147.1176
CL PIER 2	767+45.5903	-36.0000	5574.6027		-32.0825	183.8158	-42.3045	154.1177
F-1	767+52.6794	-36.0000	5574.5188		-32.1676	190.8153		161.1177
F-2	767+59.7686	-36.0000	5574.4333		-32.2699	197.8146		168.1178
F-3	767+66.8577	-36.0000	5574.3461		-32.3896	204.8137		175.1178
F-4	767+73.9468	-36.0000	5574.2573		-32.5266	211.8124		182.1179
F-5	767+81.0360	-36.0000	5574.1667		-32.6809	218.8107		189.1179
F-6	767+88.1251	-36.0000	5574.0744		-32.8526	225.8087		196.1180
F-7	767+95.2143	-36.0000	5573.9805		-33.0415	232.8062		203.1180
F-8	768+02.3034	-36.0000	5573.8849		-33.2478	239.8032		210.1181
F-9	768+09.3925	-36.0000	5573.7876		-33.4714	246.7997		217.1182
F-10	768+16.4817	-36.0000	5573.6886		-33.7123	253.7956		224.1182
F-11	768+23.5708	-36.0000	5573.5879		-33.9705	260.7909		231.1183
F-12	768+30.6599	-36.0000	5573.4855		-34.2460	267.7855		238.1183
F-13	768+37.7491	-36.0000	5573.3815		-34.5386	274.7794		245.1184
F-14	768+44.8382	-36.0000	5573.2758		-34.8489	281.7726		252.1184
F-15	768+51.9274	-36.0000	5573.1683		-35.1764	288.7650		259.1185
F-16	768+59.0165	-36.0000	5573.0592		-35.5211	295.7565		266.1185
F-17	768+66.1056	-36.0000	5572.9485		-35.8832	302.7472		273.1186
F-18	768+73.1948	-36.0000	5572.8360		-36.2625	309.7370		280.1186
F-19	768+80.2839	-36.0000	5572.7218		-36.6591	316.7258		287.1187
CL BRG A3	768+87.3731	-36.0000	5572.6060		-37.0730	323.7136	-48.8851	294.1187
BF ABUT 3	768+89.1373	-36.0000	5572.5769		-37.1787	325.4524	-49.0244	295.8608

FEDERAL AID PROJECT NO.	DIVISION	PROJ. NO.	SHEET NO.	TOTAL SHEETS
VIII	COLORADO	IXFU 470-1(42) IXFU 470-1(35)	57-1	211

REVISIONS

AS CONSTRUCTED

NO REVISIONS 12-1-87 REVISED VOID

BENT LINE DESCRIPTION OR FRACTIONAL POINT DESIGNATION	STATION	OFFSET	ELEVATION		COORDINATES FROM LAYOUT LINE: OFFSET X	COORDINATES FROM LAYOUT LINE: ORDINATE Y	BENT LINE LENGTH FROM Y-AXIS OR OFFSET FROM EXTERIOR GIRDER	GIRDER LINE LENGTH
LONGITUDINAL LINE: WEB 4								
BF ABUT 1	765+95.1873	-27.2500	5576.5526		-25.6177	34.9735	-33.7799	12.4966
CL BRG A1	765+96.7955	-27.2500	5576.5419		-25.5520	36.5651	-33.6932	14.0597
F-1	766+03.6476	-27.2500	5576.4937		-25.2740	43.5446		21.0747
F-2	766+10.8597	-27.2500	5576.4438		-25.0133	50.5247		28.0597
F-3	766+17.9518	-27.2500	5576.3923		-24.7698	57.5055		35.0447
F-4	766+25.0039	-27.2500	5576.3351		-24.5434	64.4865		42.0298
F-5	766+32.0560	-27.2500	5576.2843		-24.3343	71.4687		49.0148
F-6	766+39.1081	-27.2500	5576.2277		-24.1423	78.4511		55.9998
F-7	766+46.1602	-27.2500	5576.1695		-23.9675	85.4339		62.9848
F-8	766+53.2123	-27.2500	5576.1097		-23.8099	92.4172		69.9695
F-9	766+60.2644	-27.2500	5576.0481		-23.6695	99.4005		76.9549
F-10	766+67.3165	-27.2500	5575.9849		-23.5462	106.3847		83.9399
F-11	766+74.3685	-27.2500	5575.9200		-23.4402	113.3685		90.9249
F-12	766+81.4206	-27.2500	5575.8535		-23.3514	120.3533		97.9099
F-13	766+88.4727	-27.2600	5575.7853		-23.2797	127.3380		104.8947
F-14	766+95.5246	-27.2500	5575.7154		-23.2253	134.3228		111.8799
F-15	767+02.5765	-27.2500	5575.6439		-23.1880	141.3077		118.8650
F-16	767+09.6290	-27.2600	5575.5707		-23.1680	148.2927		125.8500
F-17	767+16.6811	-27.2500	5575.4958		-23.1651	155.2777		132.8350
F-18	767+23.7332	-27.2500	5575.4193		-23.1794	162.2627		139.8200
F-19	767+30.7853	-27.2500	5575.3410		-23.2109	169.2477		146.8050
CL PIER 2	767+37.8374	-27.2500	5575.2612		-23.2597	176.2325	-30.6705	153.7900
F-1	767+44.8062	-27.2500	5575.1797		-23.3255	183.2139		160.7718
F-2	767+51.9349	-27.2500	5575.0965		-23.4086	190.1951		167.7535
F-3	767+58.9837	-27.2500	5575.0116		-23.5058	197.1761		174.7352
F-4	767+66.0325	-27.2500	5574.9251		-23.6262	204.1569		181.7169
F-5	767+73.0812	-27.2500	5574.8370		-23.7608	211.1373		188.6986
F-6	767+80.1300	-27.2500	5574.7471		-23.9126	218.1173		195.6803
F-7	767+87.1788	-27.2500	5574.6556		-24.0815	225.0970		202.6620
F-8	767+94.2275	-27.2500	5574.5624		-24.2676	232.0762		209.6438
F-9	768+01.2763	-27.2500	5574.4676		-24.4709	239.0550		216.6255
F-10	768+08.3251	-27.2500	5574.3711		-24.6913	246.0332		223.6072
F-11	768+15.3738	-27.2500	5574.2729		-24.9289	253.0109		230.5889
F-12	768+22.4226	-27.2500	5574.1731		-25.1837	259.9880		237.5706
F-13	768+29.4714	-27.2500	5574.0716		-25.4557	266.9644		244.5523
F-14	768+36.5201	-27.2500	5573.9654		-25.7448	273.9401		251.5341
F-15	768+43.5689	-27.2500	5573.8636		-26.0510	280.9151		258.5158
F-16	768+50.6177	-27.2500	5573.7571		-26.3745	287.8893		265.4975
F-17	768+57.6664	-27.2500	5573.6489		-26.7151	294.8627		272.4792
F-18	768+64.7152	-27.2500	5573.5391		-27.0728	301.8353		279.4609
F-19	768+71.7639	-27.2500	5573.4276		-27.4477	308.8069		286.4426
CL BRG A3	768+78.8127	-27.2500	5573.3144		-27.8398	315.7776	-36.7100	293.4244
BF ABUT 3	768+80.5664	-27.2500	5573.2860		-27.9400	317.5117	-36.8421	295.1614

NOTE: 1) ELEVATIONS ARE AT TOP OF CONCRETE DECK. 0.1667 FEET BELOW FINISHED GRADE.
2) SEE DWG. B16 FOR LOCATIONS OF WEBS.

KKBNA INCORPORATED CONSULTING ENGINEERS DENVER, COLORADO

DIVISION OF HIGHWAYS

S.H. 470 OVER WADSWORTH BOULEVARD

BRIDGE DECK ELEVATIONS

F-16-MH

Designer	T. MELTON	Structure	F-16-MG
Detailer	M. VAN NATTAN	Numbers	F-16-MH

STATION	OFFSET	ELEVATION		COORDINATES FROM LAYOUT LINE OFFSET X	COORDINATES FROM LAYOUT LINE ORDINATE Y	BENT LINE LENGTH FROM T-AXIS OR OFFSET FROM EXTERIOR GIRDER	GIRDER LINE LENGTH
LONGITUDINAL LINE: ACD > SOUTH OUTSIDE EDGE							
765+82.2356	-15.5000	5577.1469		-17.1707	27.7132	-22.6415	12.4731
765+83.8395	-18.5000	5577.1365		-17.1012	29.3016	-22.5492	14.0630
765+96.3553	-18.5000	5577.1102		-16.8069	36.2656		21.0332
766+83.8709	-18.5000	5577.0423		-16.5297	43.2303		28.0035
766+88.8869	-18.5000	5577.0127		-16.2695	50.1957		34.9737
766+17.9819	-18.5000	5576.9614		-16.0264	57.1617		41.9438
766+24.9174	-18.5000	5576.9085		-15.8004	64.1282		48.9141
766+31.9330	-18.5000	5576.8548		-15.5914	71.0953		55.8844
766+38.9485	-18.5000	5576.7978		-15.3995	78.0629		62.8546
766+45.9640	-18.5000	5576.7399		-15.2246	85.0309		69.8248
766+52.9795	-18.5000	5576.6804		-15.0668	91.9993		76.7950
766+59.9951	-18.5000	5576.6192		-14.9261	98.9683		83.7652
766+67.0106	-18.5000	5576.5564		-14.8024	105.9373		90.7355
766+74.0261	-18.5000	5576.4920		-14.6958	112.9067		97.7057
766+81.0417	-18.5000	5576.4259		-14.6063	119.8763		104.6759
766+87.0572	-18.5000	5576.3581		-14.5338	126.8462		111.6461
766+95.0727	-18.5000	5576.2887		-14.4784	133.8162		118.6163
767+02.0882	-18.5000	5576.2176		-14.4401	140.7863		125.5866
767+09.1038	-18.5000	5576.1449		-14.4189	147.7565		132.5568
767+16.1193	-18.5000	5576.0706		-14.4147	154.7267		139.5270
767+23.1348	-18.5000	5575.9946		-14.4276	161.6969		146.4973
767+30.1503	-18.5000	5575.9169		-14.4575	168.6670	-19.0639	153.4675
767+37.1593	-18.5000	5575.8377		-14.5045	175.6306		160.4312
767+44.1682	-18.5000	5575.7565		-14.5685	182.5940		167.3949
767+51.1772	-18.5000	5575.6742		-14.6496	189.5572		174.3585
767+58.1861	-18.5000	5575.5901		-14.7476	196.5202		181.3222
767+65.1951	-18.5000	5575.5042		-14.8628	203.4829		188.2859
767+72.2041	-18.5000	5575.4168		-14.9949	210.4454		195.2496
767+79.2138	-18.5000	5575.3276		-15.1441	217.4074		202.2133
767+86.2229	-18.5000	5575.2369		-15.3103	224.3692		209.1770
767+93.2319	-18.5000	5575.1445		-15.4936	231.3304		216.1407
768+00.2409	-18.5000	5575.0504		-15.6938	238.2912		223.1044
768+07.2498	-18.5000	5574.9547		-15.9111	245.2515		230.0681
768+14.2588	-18.5000	5574.8573		-16.1455	252.2113		237.0318
768+21.2667	-18.5000	5574.7583		-16.3968	259.1704		243.9954
768+28.2757	-18.5000	5574.6577		-16.6652	266.1289		250.9591
768+35.2846	-18.5000	5574.5554		-16.9507	273.0868		257.9228
768+42.2936	-18.5000	5574.4514		-17.2531	280.0439		264.8865
768+49.3025	-18.5000	5574.3458		-17.5725	287.0003		271.8502
768+56.3115	-18.5000	5574.2386		-17.9090	293.9558		278.8139
768+63.3204	-18.5000	5574.1297		-18.2625	300.9105		285.7776
768+70.3294	-18.5000	5574.0191		-18.6330	307.8643	-24.5699	292.7413
768+72.0727	-18.5000	5573.9914		-18.7278	309.5938	-24.6948	294.4734
LONGITUDINAL LINE: SOUTH OUTSIDE EDGE OF DECK							
765+65.6732	-15.2500	5577.3745		-14.0373	25.0201	-18.5098	12.4644
765+87.2705	-15.2500	5577.3443		-13.9664	26.6073	-18.4163	14.0532
765+94.2726	-15.2500	5577.3387		-13.6641	33.5656		21.0188
766+01.2746	-15.2500	5577.2915		-13.3326	40.5246		27.9828
766+08.2767	-15.2500	5577.2426		-13.1165	47.4843		34.9476
766+15.2787	-15.2500	5577.1920		-12.8672	54.4446		41.9124
766+22.2808	-15.2500	5577.1399		-12.6350	61.4055		48.8771
766+29.2829	-15.2500	5577.0860		-12.4197	68.3670		55.8419
766+36.2849	-15.2500	5577.0305		-12.2215	75.3289		62.8067
766+43.2870	-15.2500	5576.9734		-12.0403	82.2914		69.7715
766+50.2890	-15.2500	5576.9147		-11.8761	89.2542		76.7363
766+57.2911	-15.2500	5576.8543		-11.7289	96.2174		83.7011
766+64.2932	-15.2500	5576.7922		-11.5988	103.1810		90.6659
766+71.2952	-15.2500	5576.7285		-11.4856	110.1449		97.6306
766+78.2973	-15.2500	5576.6632		-11.3895	117.1090		104.5954
766+85.2993	-15.2500	5576.5962		-11.3104	124.0733		111.5602
766+92.3013	-15.2500	5576.5276		-11.2484	131.0378		118.5250
766+99.3033	-15.2500	5576.4573		-11.2033	138.0025		125.4898
767+06.3055	-15.2500	5576.3854		-11.1752	144.9672		132.4546
767+13.3076	-15.2500	5576.3118		-11.1643	151.9320		139.4194
767+20.3096	-15.2500	5576.2366		-11.1703	158.8966		146.3842
767+27.3117	-15.2500	5576.1598		-11.1934	165.8615	-14.7595	153.3489
767+34.3138	-15.2500	5576.0814		-11.2334	172.8195		160.3160
767+41.3003	-15.2500	5576.0013		-11.2904	179.7753		167.2831
767+48.2946	-15.2500	5575.9196		-11.3644	186.7320		174.2502
767+55.2889	-15.2500	5575.8363		-11.4554	193.6886		181.1172
767+62.2832	-15.2500	5575.7513		-11.5633	200.6447		188.0843
767+69.2775	-15.2500	5575.6647		-11.6883	207.6006		195.0514
767+76.2718	-15.2500	5575.5765		-11.8307	214.5563		202.0184
767+83.2661	-15.2500	5575.4866		-11.9891	221.5115		208.8855
767+90.2604	-15.2500	5575.3951		-12.1656	228.4664		215.9526
767+97.2548	-15.2500	5575.3019		-12.3578	235.4208		222.9197
768+04.2491	-15.2500	5575.2071		-12.5677	242.3747		229.8867
768+11.2434	-15.2500	5575.1106		-12.7945	249.3280		236.8538
768+18.2377	-15.2500	5575.0126		-13.0383	256.2808		243.7909
768+25.2320	-15.2500	5574.9128		-13.2990	263.2330		250.7439
768+32.2263	-15.2500	5574.8115		-13.5768	270.1845		257.7050
768+39.2206	-15.2500	5574.7084		-13.8715	277.1354		264.6621
768+46.2149	-15.2500	5574.6034		-14.1832	284.0855		271.6192
768+53.2092	-15.2500	5574.4975		-14.5118	291.0347		278.5762
768+60.2035	-15.2500	5574.3896		-14.8574	297.9832		285.5333
768+67.1978	-15.2500	5574.2800		-15.2200	304.8308	-20.0693	292.4904
768+68.9373	-15.2500	5574.2525		-15.3128	306.5086	-20.1917	294.2286

BENT LINE DESCRIPTION OR FRACTIONAL POINT DESIGNATION:	STATION	OFFSET	ELEVATION		COORDINATES FROM LAYOUT LINE OFFSET X	COORDINATES FROM LAYOUT LINE ORDINATE Y	BENT LINE LENGTH FROM T-AXIS OR OFFSET FROM EXTERIOR GIRDER	GIRDER LINE LENGTH

FEDERAL AID PROJ. NO.	DIVISION	PROJ. NO.	SHEET NO.	TOTAL SHEETS
VIII	COLORADO	IXFU 470-1(42) IXFU 470-1(35)	58	211

REVISIONS

AS CONSTRUCTED

NO REVISIONS 12-1-67 REVISED VOID

BENT LINE DESCRIPTION OR FRACTIONAL POINT DESIGNATION:	STATION	OFFSET	ELEVATION		COORDINATES FROM LAYOUT LINE OFFSET X	COORDINATES FROM LAYOUT LINE ORDINATE Y	BENT LINE LENGTH FROM T-AXIS OR OFFSET FROM EXTERIOR GIRDER	GIRDER LINE LENGTH

NOTE: ELEVATIONS ARE AT TOP OF CONCRETE DECK, 0.1667 FEET BELOW FINISHED GRADE.

KKBNA INCORPORATED CONSULTING ENGINEERS DENVER, COLORADO

DIVISION OF HIGHWAYS

S.H. 470 OVER WADSWORTH BOULEVARD

BRIDGE DECK ELEVATIONS

F-16-MH

Designer T. MELTON | Structure F-16-MG

FEDERAL ROAD REGION NO.	DIVISION	PROJ. NO.	SHEET NO.	TOTAL SHEETS
VIII	COLORADO	IXFU 470-1(42) IXFU 470-1(35)	59	211

REVISIONS

AS CONSTRUCTED

NO REVISIONS 12-1-87 REVISED VOID

LONGITUDINAL LINE: NORTH OUTSIDE EDGE OF DECK

STATION	OFFSET	ELEVATION	COORDINATES FROM LAYOUT LINE OFFSET X	COORDINATES FROM LAYOUT LINE ORDINATE Y	BENT LINE LENGTH FROM Y-AXIS OR OFFSET FROM EXTERIOR GIRDER	GIRDER LINE LENGTH
765+49.6362	15.2500	5579.5538	14.5779	-12.5298	15.2227	0.0000
765+51.2017	15.2500	5579.5757	14.6679	-10.9591	19.3413	1.5733
765+58.6966	15.2500	5579.5359	15.0869	-3.4360		9.1080
765+66.1915	15.2500	5579.4992	15.4962	4.0892		16.6429
765+73.6864	15.2500	5579.4506	15.6650	11.6134		24.1776
765+81.1813	15.2500	5579.4052	16.2257	19.1396		31.7124
765+88.6761	15.2500	5579.3578	16.5659	26.6667		39.2472
765+96.1710	15.2500	5579.3086	16.8965	34.1946		46.7619
766+03.6659	15.2500	5579.2575	17.1873	41.7234		54.3167
766+11.1608	15.2500	5579.2045	17.4684	49.2529		61.8515
766+18.6557	15.2500	5579.1496	17.7299	56.7832		69.3863
766+26.1505	15.2500	5579.0928	17.9716	64.3141		76.9211
766+33.6454	15.2500	5579.0342	18.1937	71.8456		84.4558
766+41.1403	15.2500	5578.9736	18.3960	79.3776		91.9906
766+48.6352	15.2500	5578.9112	18.5786	86.9102		99.5254
766+56.1301	15.2500	5578.8469	18.7415	94.4432		107.0602
766+63.6250	15.2500	5578.7807	18.8848	101.9766		114.5949
766+71.1198	15.2500	5578.7126	19.0083	109.5104		122.1297
766+78.6147	15.2500	5578.6427	19.1120	117.0445		129.6645
766+86.1096	15.2500	5578.5708	19.1961	124.5788		137.1993
766+93.6045	15.2500	5578.4971	19.2605	132.1133		144.7341
767+01.0994	15.2500	5578.4215	19.3052	139.6479	25.4561	152.2688
767+08.6024	15.2500	5578.3439	19.3301	147.1909		159.8115
767+16.1954	15.2500	5578.2645	19.3353	154.7335		167.3546
767+23.6985	15.2500	5578.1631	19.3208	162.2768		174.8978
767+31.1115	15.2500	5578.0999	19.2965	169.8197		182.4405
767+38.6146	15.2500	5578.0148	19.2329	177.3625		189.9837
767+46.1176	15.2500	5577.9277	19.1586	184.9051		197.5267
767+53.6206	15.2500	5577.8368	19.0650	192.4475		205.0697
767+61.1237	15.2500	5577.7420	18.9517	199.9896		212.6127
767+68.6267	15.2500	5577.6554	18.8186	207.5314		220.1556
767+76.1297	15.2500	5577.5608	18.6659	215.0728		227.6986
767+83.6328	15.2500	5577.4643	18.4932	222.6138		235.2416
767+91.1352	15.2500	5577.3660	18.3005	230.1544		242.7846
767+98.6359	15.2500	5577.2658	18.0880	237.6944		250.3276
768+06.1419	15.2500	5577.1637	17.8570	245.2335		257.8705
768+13.6449	15.2500	5577.0597	17.6054	252.7726		265.4135
768+21.1480	15.2500	5576.9538	17.3341	260.3107		272.9565
768+28.6510	15.2500	5576.8460	17.0430	267.8480		280.4995
768+36.1541	15.2500	5576.7363	16.7322	275.3846		288.0425
768+43.6571	15.2500	5576.6249	16.4017	282.9203		295.5854
768+51.1601	15.2500	5576.5113	16.0514	290.4552	21.1657	303.1254
768+52.8720	15.2500	5576.4852	15.9688	292.1742	21.0567	304.8494

LONGITUDINAL LINE: WEB 6 NORTH OUTSIDE EDGE

STATION	OFFSET	ELEVATION	COORDINATES FROM LAYOUT LINE OFFSET X	COORDINATES FROM LAYOUT LINE ORDINATE Y	BENT LINE LENGTH FROM Y-AXIS OR OFFSET FROM EXTERIOR GIRDER	GIRDER LINE LENGTH
765+47.1701	18.5000	5579.8076	17.6782	-15.1950	23.3116	0.0000
765+48.7322	18.5000	5579.7997	17.7701	-13.6254	23.4319	1.5722
765+56.2131	18.5000	5579.7606	18.1953	-6.1052		9.1015
765+63.6941	18.5000	5579.7196	18.6008	1.4101		16.6307
765+71.1750	18.5000	5579.6767	18.9867	8.9294		24.1600
765+78.6559	18.5000	5579.6319	19.3530	16.4498		31.6892
765+86.1369	18.5000	5579.5853	19.6996	23.9710		39.2184
765+93.6178	18.5000	5579.5368	20.0266	31.4932		46.7477
766+01.0987	18.5000	5579.4864	20.3339	39.0161		54.2769
766+08.5797	18.5000	5579.4342	20.6216	46.5399		61.8062
766+16.0606	18.5000	5579.3800	20.8897	54.0643		69.3354
766+23.5415	18.5000	5579.3240	21.1381	61.5895		76.8647
766+31.0225	18.5000	5579.2661	21.3668	69.1152		84.3939
766+38.5034	18.5000	5579.2064	21.5759	76.6416		91.9231
766+45.9843	18.5000	5579.1447	21.7654	84.1684		99.4524
766+53.4653	18.5000	5579.0812	21.9351	91.6958		106.9816
766+60.9462	18.5000	5579.0158	22.0853	99.2235		114.5109
766+68.4271	18.5000	5578.9486	22.2157	106.7516		122.0401
766+75.9080	18.5000	5578.8794	22.3265	114.2800		129.5693
766+83.3890	18.5000	5578.8084	22.4177	121.8087		137.0986
766+90.8699	18.5000	5578.7355	22.4392	129.3376		144.6278
766+98.3508	18.5000	5578.6607	22.5410	136.8667	29.7229	152.1571
767+05.8318	18.5000	5578.5840	22.5732	144.4027		159.6932
767+13.3264	18.5000	5578.5054	22.5857	151.9397		167.2293
767+20.8142	18.5000	5578.4249	22.5735	159.4750		174.7655
767+28.3019	18.5000	5578.3425	22.5516	167.0111		182.3016
767+35.7697	18.5000	5578.2583	22.5050	174.5470		189.8377
767+43.2775	18.5000	5578.1721	22.4387	182.0829		197.3738
767+50.7653	18.5000	5578.0841	22.3527	189.6185		204.9100
767+58.2530	18.5000	5577.9943	22.2470	197.1539		212.4461
767+65.7408	18.5000	5577.9025	22.1216	204.6890		219.9822
767+73.2286	18.5000	5577.8088	21.9765	212.2237		227.5184
767+80.7164	18.5000	5577.7133	21.8118	219.7580		235.0545
767+88.2041	18.5000	5577.6159	21.6273	227.2919		242.5906
767+95.6919	18.5000	5577.5166	21.4231	234.8253		250.1267
768+03.1797	18.5000	5577.4154	21.1993	242.3581		257.6629
768+10.6675	18.5000	5577.3124	20.9558	249.8903		265.1990
768+18.1552	18.5000	5577.2075	20.6925	257.4218		272.7351
768+25.6430	18.5000	5577.1007	20.4096	264.9526		280.2713
768+33.1308	18.5000	5576.9920	20.1071	272.4826		287.8074
768+40.6186	18.5000	5576.8814	19.7848	280.0119		295.3435
768+48.1063	18.5000	5576.7690	19.4428	287.5402	25.6376	302.8797
768+49.8146	18.5000	5576.7430	19.3621	289.2576	25.5311	304.5989

LONGITUDINAL LINE: WEB 7

BENT LINE DESCRIPTION OR FRACTIONAL POINT DESIGNATION	STATION	OFFSET	ELEVATION	COORDINATES FROM LAYOUT LINE OFFSET X	COORDINATES FROM LAYOUT LINE ORDINATE Y	BENT LINE LENGTH FROM Y-AXIS OR OFFSET FROM EXTERIOR GIRDER	GIRDER LINE LENGTH
BF ABUT 1	765+40.5644	27.2500	5580.4098	26.0174	-22.3620	34.3069	0.0000
CL BRG A1	765+42.1190	27.2500	5580.4015	26.1121	-20.7954	34.4313	1.5675
F-1	765+49.5627	27.2500	5580.3647	26.5530	-13.2939		9.0848
F-2	765+57.0064	27.2500	5580.3251	26.9760	-5.7913		16.5565
F-3	765+64.4501	27.2500	5580.2841	27.3787	1.7124		24.1129
F-4	765+71.8938	27.2500	5580.2412	27.7619	9.2171		31.6274
F-5	765+79.3375	27.2500	5580.1965	28.1257	16.7228		39.1415
F-6	765+86.7811	27.2500	5580.1500	28.4699	24.2294		46.6564
F-7	765+94.2248	27.2500	5580.1015	28.7946	31.7368		54.1709
F-8	766+01.6685	27.2500	5580.0513	29.0998	39.2451		61.6854
F-9	766+09.1122	27.2500	5579.9991	29.3855	46.7542		69.1999
F-10	766+16.5559	27.2500	5579.9451	29.6516	54.2640		76.7144
F-11	766+23.9996	27.2500	5579.8893	29.8983	61.7744		84.2289
F-12	766+31.4433	27.2500	5579.8316	30.1254	69.2854		91.7434
F-13	766+38.8869	27.2500	5579.7720	30.3331	76.7971		99.2578
F-14	766+46.3306	27.2500	5579.7106	30.5212	84.3092		106.7723
F-15	766+53.7743	27.2500	5579.6473	30.6898	91.8218		114.2868
F-16	766+61.2180	27.2500	5579.5822	30.8368	99.3348		121.8013
F-17	766+68.6617	27.2500	5579.5152	30.9684	106.8482		129.3158
F-18	766+76.1054	27.2500	5579.4463	31.0784	114.3619		136.8303
F-19	766+83.5491	27.2500	5579.3756	31.1689	121.8758		144.3448
CL PIER 2	766+90.9927	27.2500	5579.3030	31.2399	129.3900	41.1934	151.8593
F-1	766+98.4398	27.2500	5579.2286	31.2914	136.9077		159.3772
F-2	767+05.8869	27.2500	5579.1522	31.3233	144.4255		166.8951
F-3	767+13.3339	27.2500	5579.0740	31.3357	151.9434		174.4129
F-4	767+20.7810	27.2500	5578.9940	31.3285	159.4613		181.9308
F-5	767+28.2280	27.2500	5578.9121	31.3018	166.9791		189.4487
F-6	767+35.6751	27.2500	5578.8283	31.2556	174.4968		196.9666
F-7	767+43.1221	27.2500	5578.7427	31.1898	182.0144		204.4845
F-8	767+50.5692	27.2500	5578.6552	31.1045	189.5318		212.0024
F-9	767+58.0162	27.2500	5578.5659	30.9996	197.0490		219.5203
F-10	767+65.4633	27.2500	5578.4747	30.8752	204.5659		227.0382
F-11	767+72.9103	27.2500	5578.3816	30.7315	212.0824		234.5561
F-12	767+80.3574	27.2500	5578.2867	30.5678	219.5985		242.0740
F-13	767+87.8044	27.2500	5578.1899	30.3848	227.1141		249.5919
F-14	767+95.2515	27.2500	5578.0913	30.1822	234.6293		257.1097
F-15	768+02.6985	27.2500	5577.9908	29.9601	242.1439		264.6276
F-16	768+10.1456	27.2500	5577.8884	29.7185	249.6579		272.1455
F-17	768+17.5927	27.2500	5577.7842	29.4573	257.1713		279.6634
F-18	768+25.0397	27.2500	5577.6781	29.1766	264.6839		287.1813
F-19	768+32.4868	27.2500	5577.5701	28.8764	272.1959		294.6992
CL BRG A3	768+39.9336	27.2500	5577.4603	28.5567	279.7069	37.4553	302.2171
BF ABUT 3	768+41.6323	27.2500	5577.4350	28.4810	281.4199	37.5555	303.9317

LONGITUDINAL LINE: WEB 8

BENT LINE DESCRIPTION OR FRACTIONAL POINT DESIGNATION	STATION	OFFSET	ELEVATION	COORDINATES FROM LAYOUT LINE OFFSET X	COORDINATES FROM LAYOUT LINE ORDINATE Y	BENT LINE LENGTH FROM Y-AXIS OR OFFSET FROM EXTERIOR GIRDER	GIRDER LINE LENGTH
BF ABUT 1	765+34.0099	36.0000	5581.0087	34.3419	-29.5166	45.2831	0.0000
CL BRG A1	765+35.5572	36.0000	5581.0015	34.4395	-27.9529	45.4125	1.5669
F-1	765+42.9641	36.0000	5580.9661	34.8976	-20.4669		9.0667
F-2	765+50.3710	36.0000	5580.9288	35.3363	-12.9798		16.5667
F-3	765+57.7779	36.0000	5580.8896	35.7556	-5.4916		24.0666
F-4	765+65.1848	36.0000	5580.8487	36.1556	1.9977		31.5666
F-5	765+72.5916	36.0000	5580.8059	36.5362	9.4880		39.0665
F-6	765+79.9985	36.0000	5580.7612	36.8974	16.9792		46.5665
F-7	765+87.4054	36.0000	5580.7147	37.2393	24.4714		54.0664
F-8	765+94.8123	36.0000	5580.6664	37.5618	31.9644		61.5664
F-9	766+02.2192	36.0000	5580.6162	37.8649	39.4582		69.0664
F-10	766+09.6260	36.0000	5580.5642	38.1486	46.9528		76.5663
F-11	766+17.0329	36.0000	5580.5104	38.4130	54.4481		84.0663
F-12	766+24.4398	36.0000	5580.4547	38.6580	61.9441		91.5662
F-13	766+31.8467	36.0000	5580.3972	38.8836	69.4406		99.0662
F-14	766+39.2536	36.0000	5580.3378	39.0898	76.9376		106.5661
F-15	766+46.6604	36.0000	5580.2766	39.2766	84.4351		114.0661
F-16	766+54.0673	36.0000	5580.2135	39.4441	91.9335		121.5661
F-17	766+61.4742	36.0000	5580.1486	39.5921	99.4320		129.0660
F-18	766+68.8811	36.0000	5580.0819	39.7208	106.9308		136.5660
F-19	766+76.2879	36.0000	5580.0133	39.8301	114.4300		144.0659
CL PIER 2	766+83.6948	36.0000	5579.9429	39.9200	121.9294	52.6391	151.5659
F-1	766+91.1017	36.0000	5579.8707	39.9905	129.4290		159.0658
F-2	766+98.5086	36.0000	5579.7966	40.0416	136.9298		166.5658
F-3	767+05.9154	36.0000	5579.7207	40.0734	144.4286		174.0657
F-4	767+13.3223	36.0000	5579.6429	40.0857	151.9286		181.5657
F-5	767+20.7292	36.0000	5579.5633	40.0786	159.4285		189.0656
F-6	767+28.1360	36.0000	5579.4819	40.0522	166.9284		196.5656
F-7	767+35.5429	36.0000	5579.3986	40.0064	174.4282		204.0655
F-8	767+42.9498	36.0000	5579.3135	39.9411	181.9279		211.5655
F-9	767+50.3567	36.0000	5579.2265	39.8565	189.4274		219.0654
F-10	767+57.7635	36.0000	5579.1377	39.7525	196.9266		226.5654
F-11	767+65.1704	36.0000	5579.0470	39.6291	204.4255		234.0653
F-12	767+72.5773	36.0000	5578.9546	39.4863	211.9241		241.5653
F-13	767+79.9841	36.0000	5578.8602	39.3241	219.4223		249.0652
F-14	767+87.3910	36.0000	5578.7641	39.1426	226.9200		256.5651
F-15	767+94.7979	36.0000	5578.6661	38.9416	234.4173		264.0651
F-16	768+02.2047	36.0000	5578.5662	38.7213	241.9140		271.5650
F-17	768+09.6116	36.0000	5578.4645	38.4816	249.4101		279.0650
F-18	768+17.0185	36.0000	5578.3610	38.2225	256.9056		286.5649
F-19	768+24.4254	36.0000	5578.2557	37.9441	264.4004		294.0649
CL BRG A3	768+31.8322	36.0000	5578.1495	37.6462	271.8944	49.6409	301.5644
BF ABUT 3	768+33.5211	36.0000	5578.1238	37.5756	273.6030	49.5475	303.2750

LONGITUDINAL LINE: WEB 9

BENT LINE DESCRIPTION OR FRACTIONAL POINT DESIGNATION	STATION	OFFSET	ELEVATION	COORDINATES FROM LAYOUT LINE OFFSET X	COORDINATES FROM LAYOUT LINE ORDINATE Y	BENT LINE LENGTH FROM Y-AXIS OR OFFSET FROM EXTERIOR GIRDER	GIRDER LINE LENGTH
BF ABUT 1	765+27.5062	44.7500	5581.6067	42.6511	-36.6588	56.2484	0.0000
CL BRG A1	765+29.0462	44.7500	5581.5999	42.7526	-35.0980	56.3742	1.5641
F-1	765+36.4167	44.7500	5581.5662	43.2268	-27.6274		9.0497
F-2	765+43.7872	44.7500	5581.5308	43.6818	-20.1556		16.5353
F-3	765+51.1577	44.7500	5581.4935	44.1175	-12.6827		24.0210
F-4	765+58.5282	44.7500	5581.4543	44.5341	-5.2086		31.5066
F-5	765+65.8987	44.7500	5581.4134	44.9314	2.2665		38.9923
F-6	765+73.2692	44.7500	5581.3706	45.3094	9.7426		46.4779
F-7	765+80.6397	44.7500	5581.3260	45.6682	17.2196		53.9635
F-8	765+88.0102	44.7500	5581.2796	46.0078	24.6975		61.4492
F-9	765+95.3807	44.7500	5581.2314	46.3282	32.1763		68.9348
F-10	766+02.7512	44.7500	5581.1813	46.6293	39.6559		76.4204
F-11	766+10.1217	44.7500	5581.1294	46.9111	47.1362		83.9061
F-12	766+17.4922	44.7500	5581.0757	47.1737	54.6172		91.3917
F-13	766+24.8627	44.7500	5581.0202	47.4171	62.0989		98.8774
F-14	766+32.2332	44.7500	5580.9628	47.6412	69.5812		106.3630
F-15	766+39.6037	44.7500	5580.9037	47.8461	77.0640		113.8486
F-16	766+46.9743	44.7500	5580.8427	48.0317	84.5473		121.3343
F-17	766+54.3448	44.7500	5580.7799	48.1981	92.0311		128.8199
F-18	766+61.7153	44.7500	5580.7152	48.3452	99.5153		136.3055
F-19	766+69.0858	44.7500	5580.6488	48.4730	106.9999		143.7912
CL PIER 2	766+76.4563	44.7500	5580.5805	48.5816	114.4847	64.0609	151.2768
F-1	766+83.6235	44.7500	5580.5105	48.6709	121.9665		158.7591
F-2	766+91.1907	44.7500	5580.4386	48.7410	129.4484		166.2414
F-3	766+98.5579	44.7500	5580.3649	48.7918	136.9305		173.7237
F-4	767+05.9251	44.7500	5580.2893	48.8233	144.4128		181.2060
F-5	767+13.2923	44.7500	5580.2120	48.8357	151.8951		188.6883
F-6	767+20.6595	44.7500	5580.1328	48.8288	159.3773		196.1706
F-7	767+28.0268	44.7500	5580.0518	48.8026	166.8596		203.6529
F-8	767+35.3940	44.7500	5579.9690	48.7572	174.3417		211.1352
F-9	767+42.7612	44.7500	5579.8844	48.6926	181.8238		218.6175
F-10	767+50.1284	44.7500	5579.7950	48.6087	189.3056		226.0997
F-11	767+57.4956	44.7500	5579.7097	48.5056	196.7872		233.5820
F-12	767+64.8628	44.7500	5579.6196	48.3833	204.2684		241.0643
F-13	767+72.2300	44.7500	5579.5277	48.2417	211.7494		248.5466
F-14	767+79.5972	44.7500	5579.4340	48.0808	219.2300		256.0289
F-15	767+86.9644	44.7500	5579.3384	47.9002	226.7101		263.5112
F-16	767+94.3317	44.7500	5579.2410	47.7015	234.1897		270.9935
F-17	768+01.6989	44.7500	5579.1419	47.4829	241.6688		278.4758
F-18	768+09.0661	44.7500	5579.0408	47.2452	249.1473		285.9581
F-19	768+16.4333	44.7500	5578.9380	46.9881	256.6252		293.4404
CL BRG A3	768+23.8005	44.7500	5578.8334	46.7119	264.1024	61.5950	300.9227
BF ABUT 3	768+25.4799	44.7500	5578.8093	46.6463	265.8068	61.5085	302.6283

NOTE: 1) ELEVATIONS ARE AT TOP OF CONCRETE DECK. 0.1667 FEET BELOW FINISHED GRADE.
2) SEE DWG. B16 FOR LOCATION OF WEBS.

KKBNA INCORPORATED CONSULTING ENGINEERS DENVER, COLORADO

DIVISION OF HIGHWAYS

S.H.470 OVER WADSWORTH BOULEVARD

BRIDGE DECK ELEVATIONS

F-16-MG

Designer T. MELTON	Structure Numbers F-16-MG
Detailer M. VAN NATTAN	F-16-MH

Drawing Number B 27 of 30 Drawings

STATION	OFFSET	ELEVATION		COORDINATES FROM LAYOUT LINE: OFFSET X	COORDINATES FROM LAYOUT LINE: ORDINATE Y	BENT LINE LENGTH FROM Y-AXIS OR OFFSET FROM EXTERIOR GIRDER	GIRDER LINE LENGTH
LONGITUDINAL LINE: WEB TO SOUTH OUTSIDE EDGE							
765+21.0524	53.5000	5587.2031		50.9467	-43.7888	67.1771	0.0000
765+22.5552	53.5000	5587.1967		51.0515	-42.2389	67.3173	1.5614
765+27.5197	53.5000	5587.1648		51.5117	-34.7755		9.4330
765+37.2543	53.5000	5587.1311		52.0128	-27.3188		16.5045
765+44.5788	53.5000	5587.0955		52.4648	-19.4610		23.9760
765+51.9234	53.5000	5587.0552		52.8976	-12.4028		31.4475
765+59.2579	53.5000	5582.8191		53.3134	-4.9420		38.9191
765+66.5925	53.5000	5581.9782		53.7063	2.5191		46.3906
765+73.9270	53.5000	5581.9354		54.0817	9.9812		53.8621
765+81.2616	53.5000	5581.8909		54.4382	17.4442		61.3336
765+88.5962	53.5000	5581.8446		54.7756	24.9081		68.8052
765+95.9307	53.5000	5581.7964		55.0938	32.3729		76.2767
766+03.2653	53.5000	5581.7465		55.3930	39.8385		83.7482
766+10.5998	53.5000	5581.6947		55.6730	47.3047		91.2197
766+17.9344	53.5000	5581.6412		55.9339	54.7716		98.6913
766+25.2689	53.5000	5581.5858		56.1757	62.2393		106.1628
766+32.6035	53.5000	5581.5287		56.3984	69.7075		113.6343
766+39.9380	53.5000	5581.4697		56.6020	77.1762		121.1059
766+47.2726	53.5000	5581.4089		56.7864	84.6455		128.5774
766+54.6071	53.5000	5581.3464		56.9517	92.1152		136.0489
766+61.9417	53.5000	5581.2820		57.0979	99.5853		143.5205
2 766+69.2763	53.5000	5581.2158		57.2250	107.0557	75.4577	150.9920
766+76.6093	53.5000	5581.1479		57.3328	114.5198		158.4569
766+83.9324	53.5000	5581.0782		57.4216	121.9812		165.9218
766+91.2605	53.5000	5581.0066		57.4912	129.4488		173.3867
766+98.5885	53.5000	5580.9333		57.5418	136.9136		180.8517
767+05.9166	53.5000	5580.8582		57.5733	144.3784		188.3166
767+13.2447	53.5000	5580.7812		57.5857	151.8433		195.7815
767+20.5727	53.5000	5580.7025		57.5789	159.3082		203.2464
767+27.9008	53.5000	5580.6220		57.5531	166.7731		210.7113
767+35.2289	53.5000	5580.5397		57.5082	174.2379		218.1763
767+42.5569	53.5000	5580.4555		57.4442	181.7025		225.6412
767+49.8850	53.5000	5580.3696		57.3611	189.1670		233.1061
767+57.2131	53.5000	5580.2819		57.2589	196.6312		240.5710
767+64.5411	53.5000	5580.1923		57.1377	204.0951		248.0359
767+71.8692	53.5000	5580.1010		56.9973	211.5587		255.5008
767+79.1973	53.5000	5580.0078		56.8378	219.0220		262.9658
767+86.5253	53.5000	5579.9129		56.6593	226.4847		270.4307
767+93.8534	53.5000	5579.8162		56.4616	233.9470		277.8956
768+01.1815	53.5000	5579.7176		56.2449	241.4088		285.3605
768+08.5095	53.5000	5579.6173		56.0091	248.8700		292.8254
768+15.8376	53.5000	5579.5152		55.7542	256.3306	73.5183	300.2904
768+17.5077	53.5000	5579.4916		55.6934	258.0307	73.4381	301.9916
LONGITUDINAL LINE: SOUTH OUTSIDE EDGE OF DECK							
1 765+18.6678	56.7500	5582.4242		54.0243	-46.4341	71.2373	0.0000
1 765+20.1580	56.7500	5582.4175		54.1384	-44.8773	71.3772	1.5605
765+27.5193	56.7500	5582.3867		54.6265	-37.4274		9.0768
765+34.8806	56.7500	5582.3536		65.1035	-29.9763		16.4931
765+42.1619	56.7500	5582.3187		55.5634	-22.5248		23.9595
765+49.4832	56.7500	5582.2821		56.0004	-15.0706		31.4258
765+56.8045	56.7500	5582.2436		56.4202	-7.6161		38.8922
765+64.1258	56.7500	5582.2034		56.8211	-.1605		46.3585
765+71.4471	56.7500	5582.1613		57.2028	7.2960		53.8248
765+78.7684	56.7500	5582.1175		57.5655	14.7536		61.2912
765+86.0898	56.7500	5582.0719		57.9092	22.2128		68.7575
1 765+93.4111	56.7500	5582.0244		58.2338	29.6713		76.2238
1 766+00.7324	56.7500	5581.9752		58.5393	37.1314		83.6902
2 766+08.0537	56.7500	5581.9242		58.8257	44.5922		91.1565
3 766+15.3750	56.7500	5581.8713		59.0931	52.0537		98.6229
4 766+22.6963	56.7500	5581.8167		59.3414	59.5159		106.0892
5 766+30.0176	56.7500	5581.7603		59.5707	66.9788		113.5555
5 766+37.3389	56.7500	5581.7021		59.7809	74.4421		121.0219
7 766+44.6602	56.7500	5581.6420		59.9719	81.9060		128.4882
8 766+51.9815	56.7500	5581.5802		60.1440	89.3704		135.9546
9 766+59.3028	56.7500	5581.5166		60.2969	96.8352		143.4209
2 766+66.6241	56.7500	5581.4512		60.4308	104.3003	39.6849	150.8872
766+73.9376	56.7500	5581.3842		60.5455	111.7579		158.3456
766+81.2515	56.7500	5581.3153		60.6411	119.2159		165.8043
766+88.5651	56.7500	5581.2444		60.7177	126.6740		173.2629
766+95.8788	56.7500	5581.1719		60.7753	134.1323		180.7216
767+03.1924	56.7500	5581.0976		60.7138	141.5902		188.1795
767+10.5061	56.7500	5581.0215		60.6333	149.0478		195.6365
767+17.8197	56.7500	5580.9436		60.5337	156.5078		203.0970
767+25.1334	56.7500	5580.8639		60.5151	163.9663		210.5555
767+32.4471	56.7500	5580.7824		60.7775	171.4245		218.0141
0 767+39.7607	56.7500	5580.6991		60.7208	178.8831		225.4726
1 767+47.0744	56.7500	5580.6140		60.6450	186.3412		232.9311
767+54.3880	56.7500	5580.5271		60.5503	193.7992		240.3897
767+61.7017	56.7500	5580.4385		60.4365	201.2568		247.8482
767+69.0153	56.7500	5580.3480		60.3036	208.7142		255.3062
5 767+76.3290	56.7500	5580.2558		60.1517	216.1712		262.7653
6 767+83.6427	56.7500	5580.1617		59.9808	223.6277		270.2232
7 767+90.9563	56.7500	5580.0659		59.7909	231.0839		277.6824
8 767+98.2700	56.7500	5579.9682		59.5819	238.5395		285.1409
768+05.5836	56.7500	5579.8688		59.3539	245.9945		292.5994
13 768+12.8973	56.7500	5579.7676		59.1068	253.4489	77.7371	300.0530
3 768+14.5639	56.7500	5579.7443		59.0478	255.1176	77.8614	301.7570

BENT LINE DESCRIPTION OR FRACTIONAL POINT DESIGNATION	STATION	OFFSET	ELEVATION		COORDINATES FROM LAYOUT LINE: OFFSET X	COORDINATES FROM LAYOUT LINE: ORDINATE Y	BENT LINE LENGTH FROM Y-AXIS OR OFFSET FROM EXTERIOR GIRDER	GIRDER LINE LENGTH

FEDERAL ROAD SECTION NO.	DIVISION	PROJ. NO.	SHEET NO.	TOTAL SHEETS
Y111	COLORADO	IXFU 470-1(42) IXFU 470-1(35)	60	211

REVISIONS

AS CONSTRUCTED

NO REVISIONS 12-1-87 REVISED VOID

BENT LINE DESCRIPTION OR FRACTIONAL POINT DESIGNATION	STATION	OFFSET	ELEVATION		COORDINATES FROM LAYOUT LINE: OFFSET X	COORDINATES FROM LAYOUT LINE: ORDINATE Y	BENT LINE LENGTH FROM Y-AXIS OR OFFSET FROM EXTERIOR GIRDER	GIRDER LINE LENGTH

NOTE: ELEVATIONS ARE AT TOP OF CONCRETE DECK. 0.1667 FEET BELOW FINISHED GRADE.

KKBNA INCORPORATED CONSULTING ENGINEERS DENVER, COLORADO

DIVISION OF HIGHWAYS

S.H.470 OVER WADSWORTH BOULEVARD

BRIDGE DECK ELEVATIONS

F-16-MG

Designer T. MELTON Structure F-16-MG

Detailer M. VAN NATTAN Number F-16-MH

Drawing Number 8 of 20