GENERAL NOTES

STRUCTURE EXCAVATION AND BACKFILL SHALL BE AS SHOWN ON THE PLANS, EXCEPT SHORING MAY BE REQUIRED FOR EXCAVATION ADJACENT TO THE EXISTING ROADWAY. TEMPORARY EXCAVATION SUPPORT SHALL BE PAID FOR BY ITEM 206 SHORING.

EXPANSION JOINT MATERIAL SHALL MEET AASHTO SPECIFICATION M213.

A COLORED STRUCTURAL CONCRETE COATING FINISH WILL BE REQUIRED, AS SHOWN ON THE PLANS, ON EXPOSED CONCRETE SURFACES TO 1 FOOT BELOW FINISHED GROUND. THE COLOR SHALL BE SELECTED FROM TEST PANELS PROVIDED BY THE CONTRACTOR.

LEVELING PADS ARE UNLAMINATED BEARINGS. THEY SHALL BE CUT OR MOLDED FROM AASHTO ELASTOMER GRADE 3, 4, OR 5 AS DESCRIBED IN TABLES 705-1 AND 705-2 WITH A DUROMETER (SHORE "A") HARDNESS OF 60.

GRADE 60 REINFORCING STEEL IS REQUIRED.

ALL REINFORCING STEEL SHALL BE EPOXY COATED UNLESS OTHERWISE NOTED.

(N) DENOTES NON COATED REINFORCING STEEL.

ALL THE PROVISIONS FOR BRIDGE DECK CONCRETE SHALL ALSO APPLY TO APPROACH SLAB CONCRETE.

THE FOLLOWING TABLE GIVES THE MINIMUM LAP SPLICE LENGTH FOR EPOXY COATED REINFORCING BARS PLACED IN ACCORDANCE WITH SUBSECTION 602.06. THESE SPLICE LENGTHS SHALL BE INCREASED BY 25% FOR BARS CLEARLY SPACED LESS THAN 6" OR FOR BARS WITH CLEAR COVER LESS THAN 3ø.

BAR SIZE	#4	#5	#6	#7	#8	#9	#10	#11
SPLICE LENGTH FOR CLASS D CONCRETE	2'-1"	2'-7"	3'-1"	4'-6"	5'-11"	7'-6"	9'-7"	9'-7"

WHEN THE CONTRACTOR ELECTS TO SUBSTITUTE EPOXY COATED REINFORCEMENT FOR BLACK REINFORCING BARS, THE MINIMUM LAP SPLICE SHALL BE AS DESCRIBED ABOVE.

THE FOLLOWING TABLE GIVES THE MINIMUM LAP SPLICE LENGTH FOR BLACK REINFORCING BARS PLACED IN ACCORDANCE WITH SUBSECTION 602.06.

BAR SIZE	#4	#5	#6	#7	#8	#9	#10	#11
SPLICE LENGTH FOR CLASS D CONCRETE	1'-9"	2'-2"	2'-7"	3'-0"	4'-0"	5'-0"	6'-4"	6'-4"

THE ABOVE SPLICE LENGTHS SHALL BE INCREASED BY 20% FOR 3 BAR BUNDLES AND 33 PERCENT FOR 4 BAR BUNDLES.

THE ABOVE SPLICE LENGTHS MAY BE REDUCED BY 20% WHEN 3" OF CLEAR COVER EXISTS IN THE DIRECTION OF THE SPACING AND BAR SPACING IS 6" OR GREATER ON CENTER.

THE CONTRACTOR SHALL BE RESPONSIBLE FOR THE STABILITY OF THE STRUCTURE DURING CONSTRUCTION.

AH. - AHEAD
ABUT. - ABUTMENT
B.F. - BACK FACE
BK. - BACK
BOT. - BOTTOM
BRG. - BEARING
CONST. - CONSTRUCTION
CLR. - CLEAR
CONT. - CONTINUOUS
DWG. - DRAWING
E.F. - EACH FACES
ELEV. - ELEVATION
EMBED. - EMBEDMENT
EQ. - EQUALLY
F.F. - FAR FACE
GALV. - GALVANIZED
JT. - JOINT
MAX. - MAXIMUM
MIN. - MINIMUM
N.F. - NEAR FACE
NO. - NUMBER
NOM. - NOMINAL
O.C. - ON CENTER
PGL - PROFILE GRADE LINE
PROJ. - PROJECTION
SHLD. - SHOULDER
SPA. - SPACED
STA. - STATION
STD. - STANDARD
STR. - STRUCTURE
TYP. - TYPICAL

PERMANENT DECK FORMS ARE REQUIRED. PERMANENT STEEL DECK FORMS ARE ALLOWED.

FOR STRUCTURE NUMBER INSTALLATION, SEE STANDARD S-614-12.

STATIONS, ELEVATIONS, AND DIMENSIONS CONTAINED IN THESE PLANS ARE CALCULATED FROM A RECENT FIELD SURVEY. THE CONTRACTOR SHALL VERIFY ALL DEPENDENT DIMENSIONS IN THE FIELD BEFORE ORDERING OR FABRICATING ANY MATERIAL.

THE INFORMATION SHOWN ON THESE PLANS CONCERNING THE TYPE AND LOCATION OF UNDERGROUND UTILITIES IS NOT GUARANTEED TO BE ACCURATE OR ALL INCLUSIVE. THE CONTRACTOR IS RESPONSIBLE FOR MAKING HIS OWN DETERMINATION AS TO THE TYPE AND LOCATION OF UNDERGROUND UTILITIES AS MAY BE NECESSARY TO AVOID DAMAGE THERETO. THE CONTRACTOR SHALL CONTACT THE UTILITY NOTIFICATION CENTER OF COLORADO AT 1-800-922-1987 AT LEAST 2 DAYS (NOT INCLUDING THE DAY OF NOTIFICATION) PRIOR TO ANY EXCAVATION OR OTHER EARTHWORK.

SUMMARY OF QUANTITIES

ITEM NO.	DESCRIPTION	UNIT	BRIDGE WIDENING SUPER-STRUCTURE	BRIDGE WIDENING ABUT. 1	BRIDGE WIDENING PIER 2	BRIDGE WIDENING ABUT. 3	PEDESTRIAN BRIDGE SUPER-STRUCTURE	PEDESTRIAN BRIDGE ABUT. 1	PEDESTRIAN BRIDGE PIER 2	PEDESTRIAN BRIDGE ABUT. 3	TOTAL
202	REMOVAL OF PORTIONS OF PRESENT STRUCTURE	EACH	1								1
206	STRUCTURE EXCAVATION	CY		51	4	51		116	4	116	342
206	STRUCTURE BACKFILL (CLASS 1)	CY		49		49		71		71	240
206	STRUCTURE BACKFILL (CLASS 2)	CY		1	3	1		41	3	41	90
206	MECHANICAL REINFORCEMENT OF SOIL	CY		49		49		71		71	240
206	SHORING (AREA 1)	LS		1							1
206	SHORING (AREA 2)	LS				1					1
403	HOT BITUMINOUS PAVEMENT (GRADING S) (100) (PG64-22)	TON	454								454
502	PILE TIP	EACH		4		4		5		5	18
502	STEEL PILING (HP 10x57)	LF		98		81		123		101	403
503	DRILLED CAISSON (42 INCH)	LF			34				34		68
507	CONCRETE SLOPE AND DITCH PAVING (REINFORCED)	CY		9.1		8.6		30.9		30.9	79.5
509	STRUCTURAL STEEL	LS									1
514	PEDESTRIAN RAILING (STEEL)	LF					525				525
515	WATERPROOFING (MEMBRANE)	SY	2881								2881
518	BRIDGE EXPANSION DEVICE (0-2 INCH)	LF	32.4				29.3				61.7
601	CONCRETE CLASS B (BRIDGE)	CY						12		12	24
601	CONCRETE CLASS D (BRIDGE)	CY	127	11.4	18.4	11.4	142.7	54	21.1	54	440
601	CUT STONE VENEER	SF						836		836	1672
601	STRUCTURAL CONCRETE COATING	SY	863.5	7.9	50.4	7.9	1502.9	24.3	57.9	24.3	2539.1
601	ARCHITECTURAL MOMUMENT	EACH						2		2	4
602	REINFORCING STEEL	LB						5000		5000	10000
602	REINFORCING STEEL (EPOXY COATED)	LB	38801	1635	6041	1635	27173	5782	6041	5782	92890
606	BRIDGE RAIL TYPE 7	LF	260.5								260.5
607	FENCE CHAIN LINK (SPECIAL) (36 INCH)	LF	211.5								211.5
(1) 610	MEDIAN COVER MATERIAL (4 INCH PATTERNED CONCRETE)	SF	842.5								842.5
613	1 INCH ELECTRICAL CONDUIT	LF						50		50	100
613	2 INCH ELECTRICAL CONDUIT	LF					240				240
613	LUMINAIRE (SPECIAL)	EACH					1	4		4	9
618	PRESTRESSED CONCRETE BOX GIRDER (DEPTH 32"-48")	SF	2504				2504				5008

(1) INCLUDES BED COURSE MATERIAL

B1 / A — CROSS REFERENCE DRAWING NUMBER (IF BLANK, REFERENCE IS TO SAME SHEET); SECTION OR DETAIL IDENTIFICATION

(1) — DENOTES KEY NOTE REFERENCE
(C1) — DENOTES CAISSON NUMBER
(G1) — DENOTES GIRDER NUMBER

INDEX OF DRAWINGS

B1 GENERAL INFORMATION
B2 GENERAL LAYOUT (1 OF 2)
B3 GENERAL LAYOUT (2 OF 2)
B4 TYPICAL SECTION
B5 SUGGESTED PHASING
B6 ENGINEERING GEOLOGY
B7 CONSTRUCTION LAYOUT (1 OF 2)
B8 CONSTRUCTION LAYOUT (2 OF 2)
B9 FOUNDATION LAYOUT
B10 ABUTMENT 1
B11 ABUTMENT 3
B12 ABUTMENT DETAILS (1 OF 3)
B13 ABUTMENT DETAILS (2 OF 3)
B14 ABUTMENT DETAILS (3 OF 3)
B15 RETAINING WALLS A & C
B16 RETAINING WALLS B & D
B17 PIER 2
B18 PIER DIAPHRAGM DETAILS
B19 SUPERSTRUCTURE DETAILS
B20 PRESTRESSED CONCRETE BOX
B21 DECK REINFORCING PLAN
B22 BRIDGE RAIL TYPE 7
B23 FENCE CHAIN LINK (SPECIAL)
B24 PEDESTRIAN RAILING
B25 APPROACH SLAB DETAILS (1 OF 2)
B26 APPROACH SLAB DETAILS (2 OF 2)
B27 ARCHITECTURAL DETAILS (1 OF 5)
B28 ARCHITECTURAL DETAILS (2 OF 5)
B29 ARCHITECTURAL DETAILS (3 OF 5)
B30 ARCHITECTURAL DETAILS (4 OF 5)
B31 ARCHITECTURAL DETAILS (5 OF 5)
B32 EXCAVATION AND BACKFILL (1 OF 2)
B33 EXCAVATION AND BACKFILL (2 OF 2)
B34 MECHANICALLY STABILIZED BACKFILL
B35 SLOPE PAVING
B36 DECK ELEVATION DIAGRAM
B37 BRIDGE DECK ELEVATIONS (1 OF 5)
B38 BRIDGE DECK ELEVATIONS (2 OF 5)
B39 BRIDGE DECK ELEVATIONS (3 OF 5)
B40 BRIDGE DECK ELEVATIONS (4 OF 5)
B41 BRIDGE DECK ELEVATIONS (5 OF 5)

BRIDGE DESCRIPTION

2-SPAN (104'-6", 104'-6") WIDENING
CONCRETE PRESTRESSED BOX GIRDER CONTINUOUS (PRECAST)

OVER INTERSTATE C-470

111'-9" ROADWAY CURB TO CURB, 90° 28'00" SKEW
3'-6" MEDIAN, 11'-9" WIDENING (EAST SIDE),
1'-6" BRIDGE RAIL TYPE 7 (EAST SIDE)
FENCE CHAIN LINK (SPECIAL) (EAST SIDE)

DESIGN DATA

AASHTO, THIRD EDITION LRFD

DESIGN METHOD: LOAD AND RESISTANCE FACTOR DESIGN

LIVE LOAD:
QUEBEC WIDENING: AASHTO HL-93 AND COLORADO PERMIT VEHICLE
PEDESTRIAN BRIDGE: AASHTO PEDESTRIAN LOADING OR COLORADO TYPE 3 LEGAL LOAD.

DEAD LOAD: ASSUMES 45 LBS. PER SQ. FT. FOR BRIDGE DECK OVERLAY
ASSUMES 5 LBS. PER SQ. FT. FOR PERMANENT STEEL DECK FORMS — ? Deck overhang

REINFORCED CONCRETE:
CLASS D CONCRETE: f'c = 4,500 psi
REINFORCING STEEL: fy = 60,000 psi

CAISSON CONCRETE:
CLASS BZ CONCRETE: f'c = 4,000 psi
REINFORCING STEEL: fy = 60,000 psi

PRECAST PRESTRESSED CONCRETE:
CLASS PS CONCRETE f'c = (SEE DETAILS)
f's = 270,000 psi

STRUCTURAL STEEL:
AASHTO M-223 (ASTM A572 GRADE 50)
fy = 50,000 psi

PRELIMINARY
SUBJECT TO REVISION

Design	INITIAL	DATE
Designed By	SA	08/05
Checked By		

Detail	INITIAL	DATE
Detailed By	ERS	02/06
Checked By		

Quantities	INITIAL	DATE
Quantities By		
Checked By		

Revision Dates (Preliminary Stage Only)

S:\Tranproj\246177-00\HwyDes\Plans\brgi01.dgn
8:54:22 AM 6/1/2006

Computer File Information	
Creation Date: 02/23/06	Initials: ERS
Last Modification Date: 02/23/06	Initials: ERS
Full Path: S:\Tranproj\ 246177-00\HwyDes\Plans\	
Drawing File Name: brgi01.dgn	
CAD Ver. MicroStation V8 Scale: NONE	Units: ENGLISH

Sheet Revisions

DOUGLAS COUNTY
Department of Public Works
100 Third Street
Castle Rock, CO 80104
Phone: (303) 660-7490
FAX: (303) 688-9343

PBSJ
4601 DTC Blvd.
Suite 700
Denver, CO 80237
Phone: 303/221-7275
Fax: 303/221-7276

As Constructed
No Revisions:
Revised:
Void:

QUEBEC OVER C470
GENERAL INFORMATION

Designer:	S. Abraham	Structure Numbers	F-17-HJ
Detailer:	E. Schawo		F-17-QT
Sheet Subset:	BRIDGE	Subset Sheets:	B1 of 41

Project No./Code
C.I. 03-013

Sheet Number 34

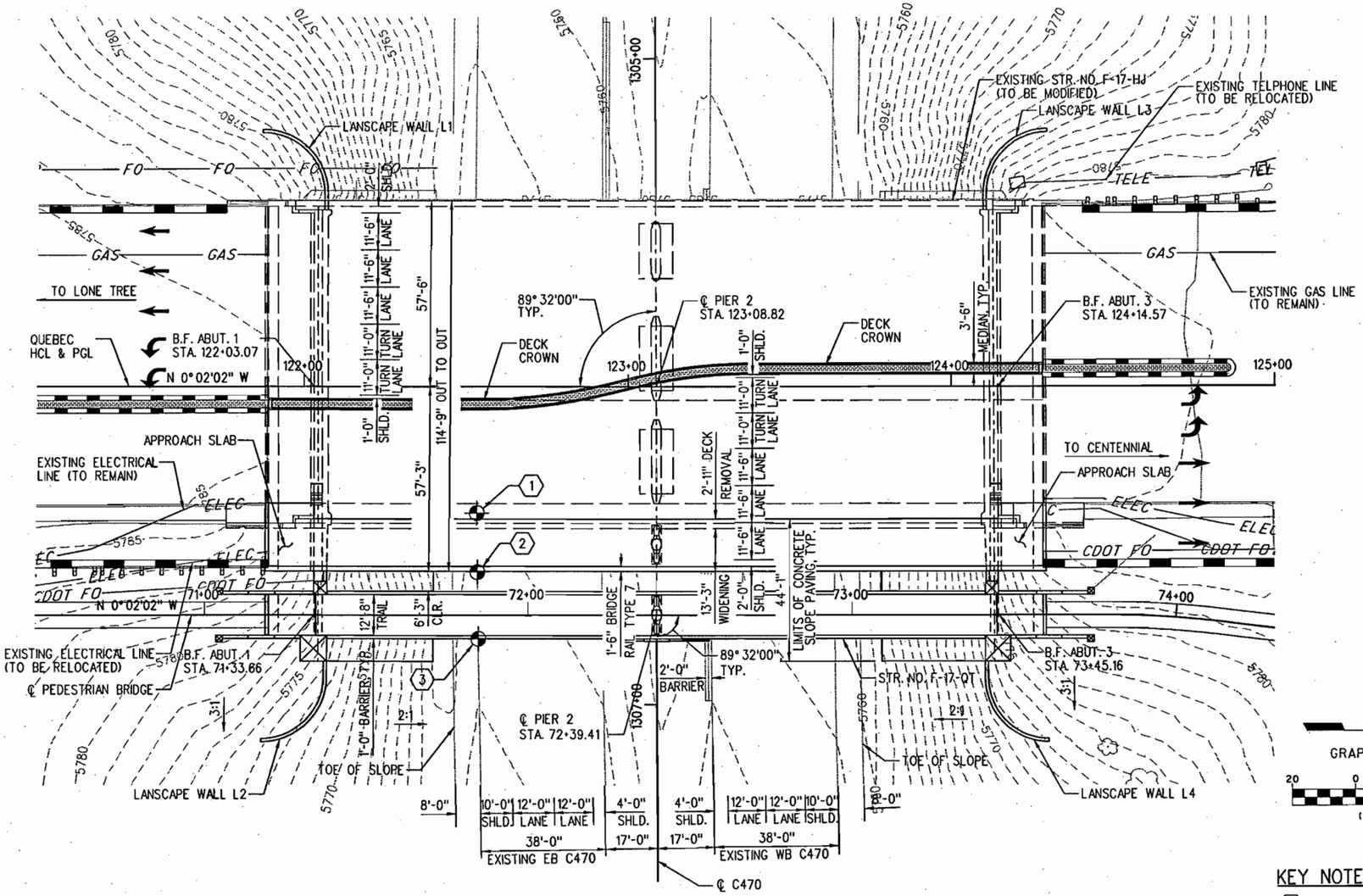

PLAN

(ORIGINAL GROUND CONTOURS SHOWN)

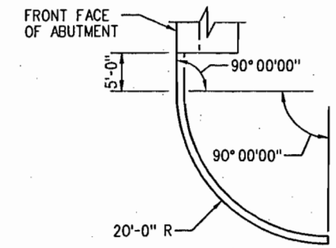

LANDSCAPE WALL PLAN (4)

TOP OF WALL ELEVATION

LANDSCAPE WALL	ELEVATION
L1	5780.0
L2	5778.0
L3	5778.0
L4	5776.0

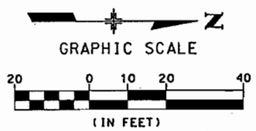

KEY NOTES

1. MINIMUM VERTICAL CLEARANCE OF EXISTING STRUCTURE IS 16'-8", MEASURED FROM BOTTOM OF EXISTING GIRDER TO TOP OF EXISTING ROADWAY.
2. MINIMUM VERTICAL CLEARANCE OF WIDENED PORTION IS 17'-4", MEASURED FROM BOTTOM OF NEW GIRDER TO TOP OF EXISTING ROADWAY.
3. MINIMUM VERTICAL CLEARANCE OF PEDESTRIAN BRIDGE IS 18'-10", MEASURED FROM BOTTOM OF NEW GIRDER TO TOP OF EXISTING ROADWAY.
4. FOR LANDSCAPING WALL SECTIONS, SEE RETAINING WALL PLANS.

PRELIMINARY
SUBJECT TO REVISION

Design	INITIAL	DATE
Designed By	DAN	03/04
Checked By		

Detail	INITIAL	DATE
Detailed By	ARP	03/04
Checked By		

Quantities	INITIAL	DATE
Quantities By		
Checked By		

Revision Dates (Preliminary Stage Only)

12:48:53 PM s:\tranproj\246177-00\hwydes\plans\brgt01.dgn

5/30/2006

Computer File Information	
Creation Date: 03/10/04	Initials: ARP
Last Modification Date: 04/10/06	Initials: ERS
Full Path: S:\Tranproj\ 246177-00\HwyDes\Plans\	
Drawing File Name: brgt01.dgn	
CAD Ver. MicroStation V8 Scale: 1"=40'-0"	Units: ENGLISH

Sheet Revisions

DOUGLAS COUNTY
Department of Public Works
100 Third Street
Castle Rock, CO 80104
Phone: (303) 660-7490
FAX: (303) 688-9343

PBSJ
4601 DTC Blvd.
Suite 700
Denver, CO 80237
Phone: 303/221-7275
Fax: 303/221-7276

As Constructed
No Revisions:
Revised:
Void:

QUEBEC OVER C470
GENERAL LAYOUT (1 OF 2)

Designer:	S. Abraham	Structure Numbers	F-17-HJ
Detailer:	A. Pelster		F-17-QT
Sheet Subset:	BRIDGE	Subset Sheets:	B2 of 41

Project No./Code
C.I. 03-013

Sheet Number 35

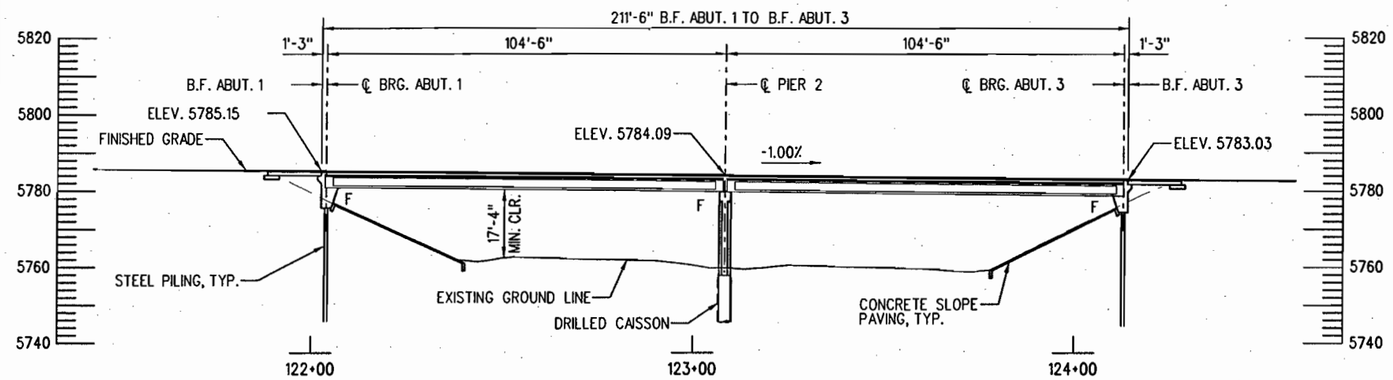

QUEBEC WIDENING SECTION

(TAKEN ALONG ℄ EAST GIRDER)
(ELEVATIONS ARE AT FINISHED GRADE AT PGL)

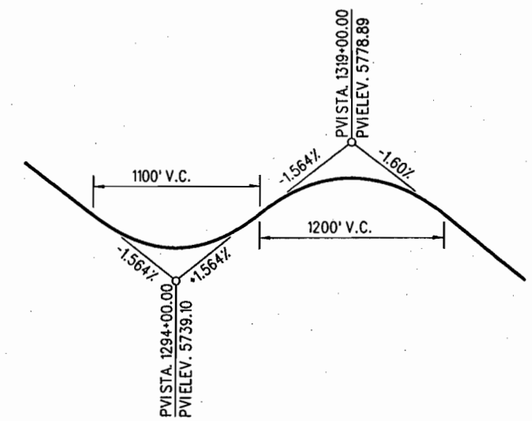

C470 VERTICAL PROFILE

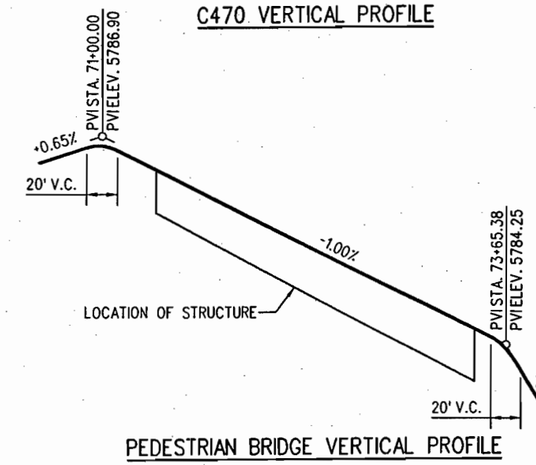

PEDESTRIAN BRIDGE VERTICAL PROFILE

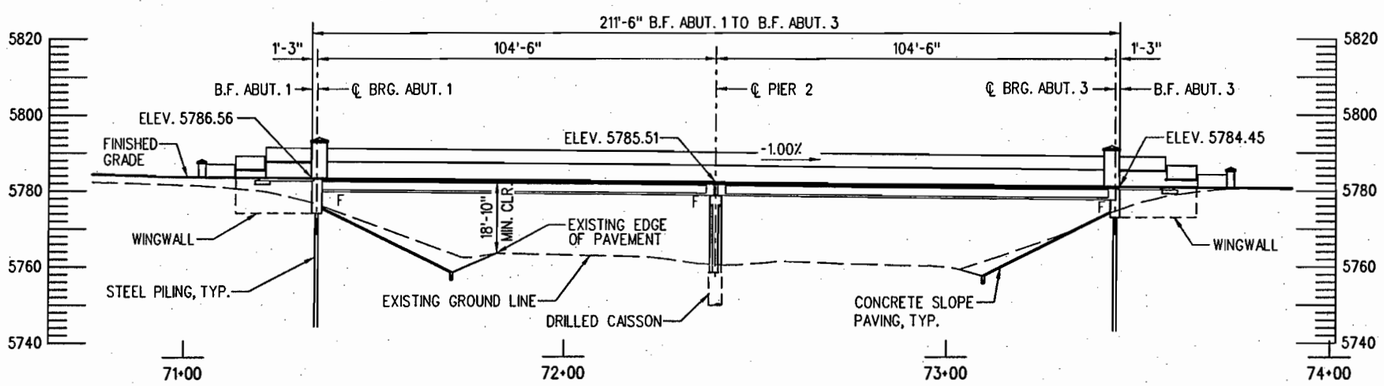

PEDESTRIAN BRIDGE SECTION

(TAKEN ALONG ℄ PEDESTRIAN BRIDGE)
(ELEVATIONS ARE AT FINISHED GRADE AT PGL)

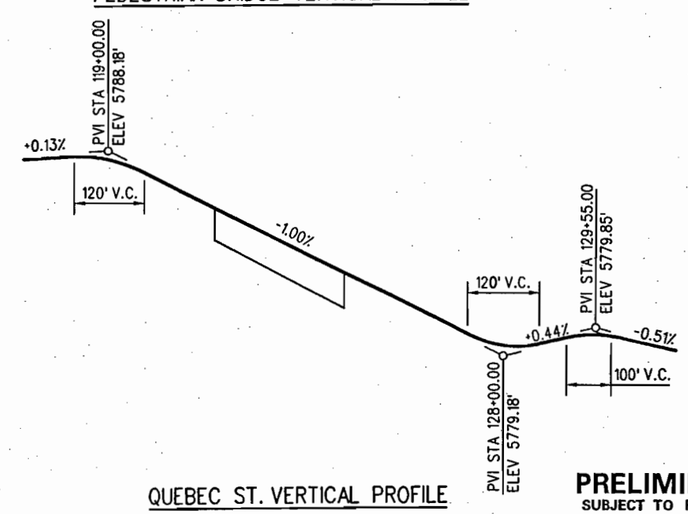

QUEBEC ST. VERTICAL PROFILE

PRELIMINARY
SUBJECT TO REVISION

Design	INITIAL	DATE
Designed By	DAN	03/04
Checked By		

Detail	INITIAL	DATE
Detailed By	ARP	03/04
Checked By		

Quantities	INITIAL	DATE
Quantities By		
Checked By		

Revision Dates (Preliminary Stage Only)

s:\tranproj\246177-00\hwydes\plans\brgt02.dgn
12:48:59 PM
5/30/2006

Computer File Information	
Creation Date: 03/10/04	Initials: ARP
Last Modification Date: 04/10/06	Initials: ERS
Full Path: S:\Tranproj\ 246177-00\HwyDes\Plans\	
Drawing File Name: brgt02.dgn	
CAD Ver. MicroStation V8 Scale: 1"=40'-0"	Units: ENGLISH

Sheet Revisions

DOUGLAS COUNTY
Department of Public Works
100 Third Street
Castle Rock, CO 80104
Phone: (303) 660-7490
FAX: (303) 688-9343

PBSJ
4601 DTC Blvd.
Suite 700
Denver, CO 80237
Phone: 303/221-7275
Fax: 303/221-7276

As Constructed
No Revisions:
Revised:
Void:

QUEBEC OVER C470
GENERAL LAYOUT (2 OF 2)

Designer: D. Nemovitz
Detailer: A. Pelster
Sheet Subset: BRIDGE
Structure Numbers: F-17-HJ, F-17-QT
Subset Sheets: B3 of 41

Project No./Code
C.I. 03-013

Sheet Number 36

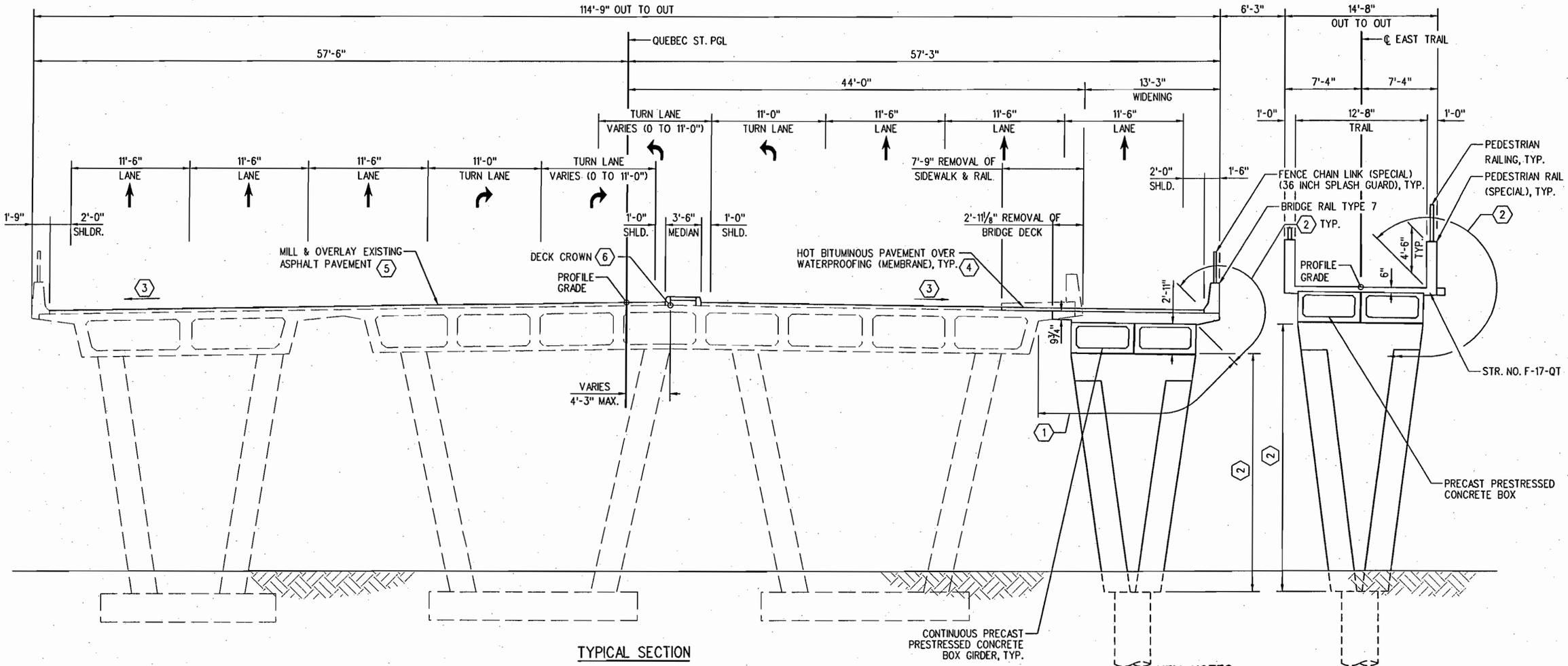

TYPICAL SECTION

(LOOKING AHEAD STATION)

KEY NOTES

1. LIMITS OF STRUCTURAL CONCRETE COATING, EQUIVALENT TO FEDERAL STANDARD 595B COLOR NO. 32516.
2. LIMITS OF STRUCTURAL CONCRETE COATING, EQUIVALENT TO FEDERAL STANDARD 595B COLOR NO. 31667.
3. TOP OF CONCRETE DECK WIDENING AND NEW PAVEMENT SHALL MATCH THE CROSS SLOPE OF THE EXISTING CONCRETE DECK - APPROXIMATELY 0.015'/FT.
4. DEPTH OF PAVEMENT VARIES. 3 INCHES MINIMUM. max ?
5. EXISTING ASPHALT SHALL BE MILLED AND OVERLAYED TO PROVIDE 0.015'/FT. CROSS SLOPE.
6. DECK CROWN FOLLOWS THE MEDIAN PATH.

PRELIMINARY
SUBJECT TO REVISION

Design	INITIAL	DATE
Designed By	SA	02/06
Checked By		

Detail	INITIAL	DATE
Detailed By	ARP	03/04
Checked By		

Quantities	INITIAL	DATE
Quantities By		
Checked By		

Revision Dates (Preliminary Stage Only)

12:49:04 PM s:\tranproj\246177-00\hwydes\plans\brty01.dgn 5/30/2006

Computer File Information	
Creation Date: 03/15/04	Initials: ARP
Last Modification Date: 04/10/06	Initials: ERS
Full Path: S:\Tranproj\ 246177-00\HwyDes\Plans\	
Drawing File Name: brty01.dgn	
CAD Ver. MicroStation V8 Scale: 1"=10'-0"	Units: ENGLISH

Sheet Revisions

DOUGLAS COUNTY
Department of Public Works
100 Third Street
Castle Rock, CO 80104
Phone: (303) 660-7490
FAX: (303) 688-9343

PBSJ
4601 DTC Blvd.
Suite 700
Denver, CO 80237
Phone: 303/221-7275
Fax: 303/221-7276

As Constructed
No Revisions:
Revised:
Void:

QUEBEC OVER C470
TYPICAL SECTION

Designer:	S. Abraham	Structure Numbers	F-17-HJ
Detailer:	A. Pelster		F-17-QT
Sheet Subset:	BRIDGE	Subset Sheets:	B4 of 41

Project No./Code
C.I. 03-013

Sheet Number 37

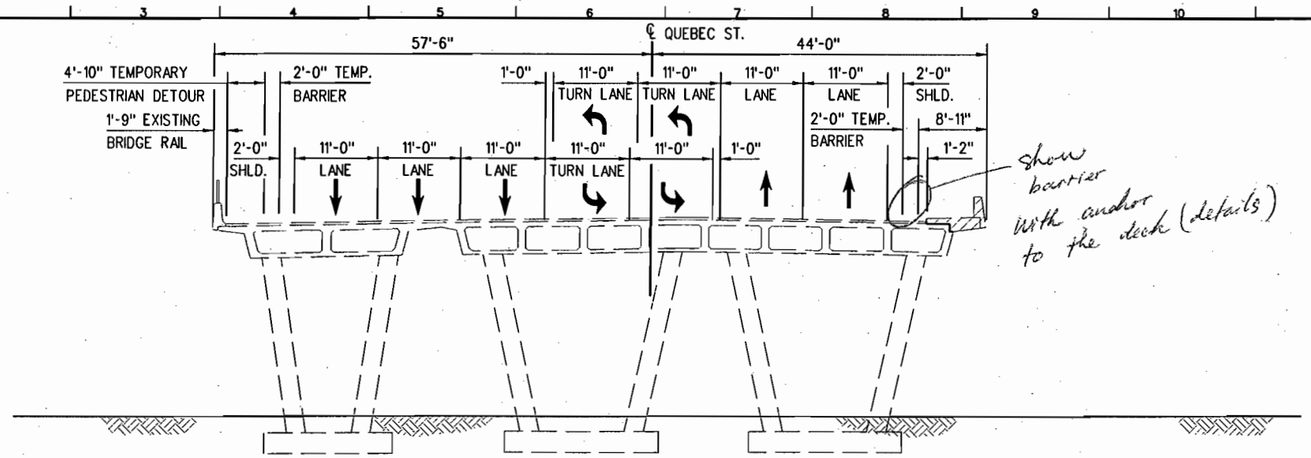

STAGE 1

PERFORM PAVEMENT MILLING AND DECK REPAIR OPERATIONS.

STAGE 2

SHIFT SOUTHBOUND TRAFFIC TO THE EAST. SHIFT NORTHBOUND TRAFFIC TO THE WEST. SHIFT PEDESTRIAN TRAFFIC TO WEST EDGE OF DECK, BEHIND TEMPORARY BARRIER.

REMOVE EXISTING EAST SIDEWALK, BRIDGE RAIL AND DECK.

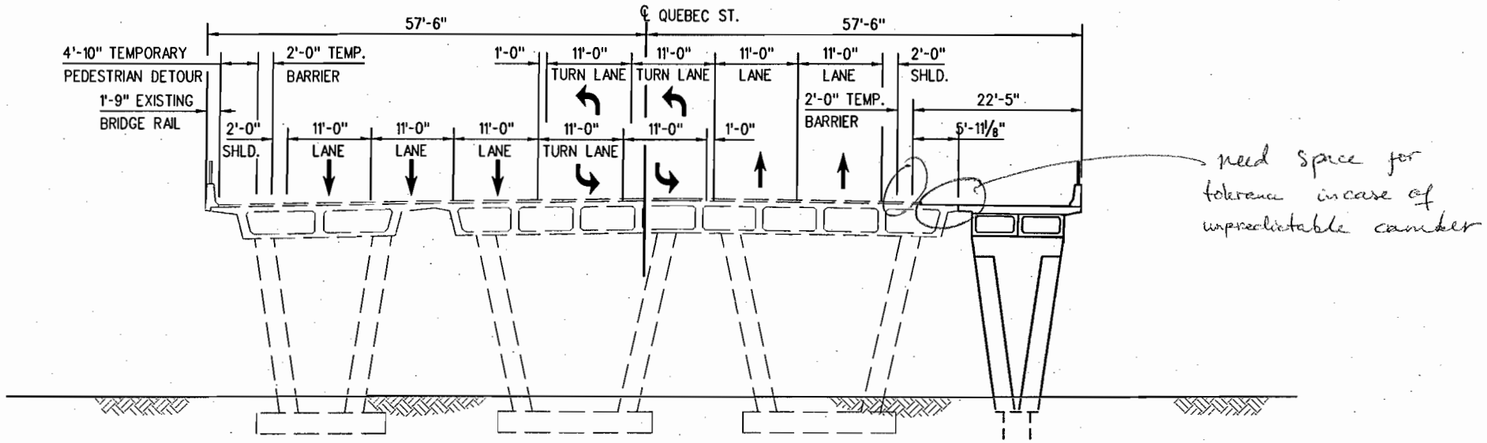

STAGE 3

CONSTRUCT BRIDGE WIDENING.

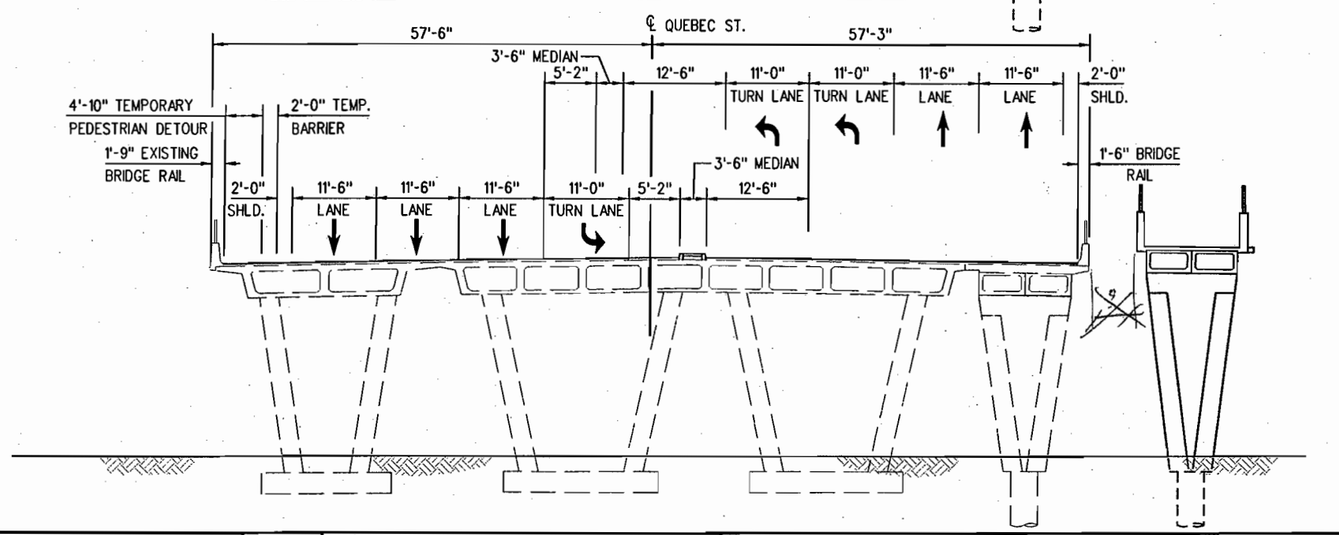

STAGE 4

SHIFT NORTHBOUND TRAFFIC TO WIDENED STRUCTURE.

CONSTRUCT RAISED MEDIAN.

STAGE 5

CONSTRUCT PEDESTRIAN BRIDGES AND TRAILS

STAGE 6

SHIFT PEDESTRIAN TRAFFIC TO TRAILS. REMOVE TEMPORARY BARRIER AND SHIFT TRAFFIC TO FINAL LANE CONFIGURATION.

STAGE 7

CONSTRUCT HBP OVERLAY.

Design	INITIAL	DATE
Designed By	DAN	03/04
Checked By		

Detail	INITIAL	DATE
Detailed By	ARP	03/04
Checked By		

Quantities	INITIAL	DATE
Quantities By		
Checked By		

Revision Dates (Preliminary Stage Only)

s:\tranproj\246177-00\hwydes\plans\brph01.dgn

12:49:08 PM

5/30/2006

Computer File Information	
Creation Date: 03/23/04	Initials: ARP
Last Modification Date: 04/11/06	Initials: ERS
Full Path: S:\Tranproj\ 246177-00\HwyDes\Plans\	
Drawing File Name: brph01.dgn	
CAD Ver. MicroStation V8 Scale: 1"=20'-0"	Units: ENGLISH

Sheet Revisions

DOUGLAS COUNTY
Department of Public Works
100 Third Street
Castle Rock, CO 80104
Phone: (303) 660-7490
FAX: (303) 688-9343

PBSJ
4601 DTC Blvd.
Suite 700
Denver, CO 80237
Phone: 303/221-7275
Fax: 303/221-7276

As Constructed

No Revisions:

Revised:

Void:

QUEBEC OVER C470 SUGGESTED PHASING

Designer:	D. Nemovitz	Structure Numbers	F-17-HJ
Detailer:	A. Pelster		F-17-QT
Sheet Subset:	BRIDGE	Subset Sheets:	B5 of

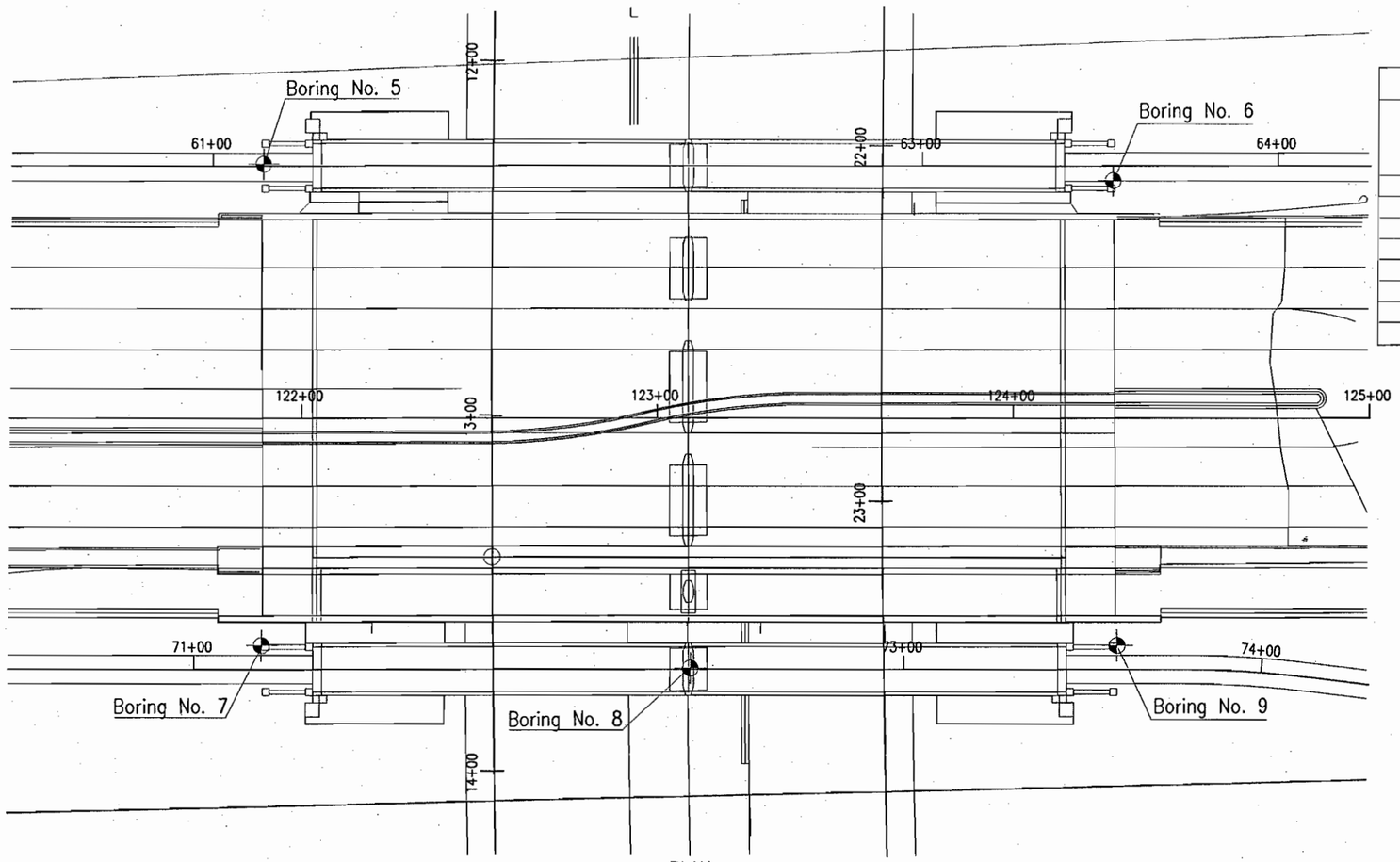

PLAN

(ORIGINAL GROUND CONTOURS SHOWN)

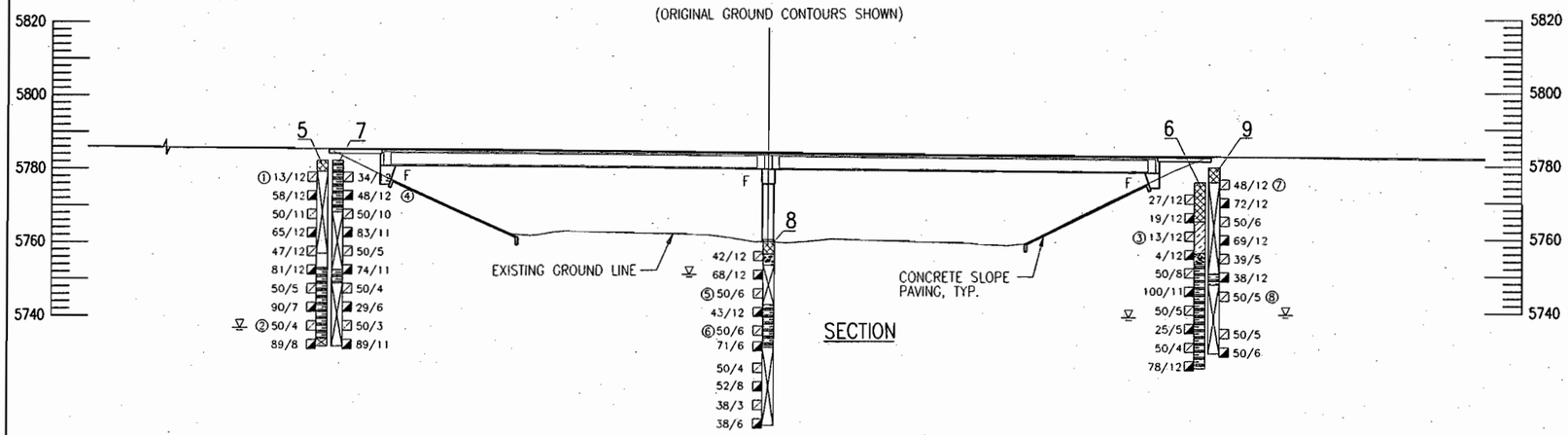

SECTION

SUMMARY OF SELECTED TEST RESULTS

BORING	REF SAMPLE	ELEVATION (FT)	USCS CLASSIFICATION	GRADING ANALYSIS PERCENT GRAVEL	SAND	SILT AND CLAY	ATTERBERG LIMITS LL	PI	WATER CONT %	DRY UNIT WEIGHT PCF	UNCONFINED COMPRESSIVE STRENGTH PSF	SWELL (%)
5	1	5877	SC	--	--	--	--	--	8	110	--	--
5	2	5837	--	--	--	--	--	--	16	106	--	+0.9
6	3	5764	CL	--	--	--	--	--	15	108	--	--
7	4	5773	--	--	--	--	--	--	15	123	--	--
8	5	5746.5	--	--	--	--	--	--	15	116	--	--
8	6	5736.5	--	--	--	--	--	--	13	121	--	--
9	7	5776	--	--	--	--	--	--	10	113	--	--
9	8	5746	--	--	--	--	--	--	11	112	4350	--

TYPE OF MATERIAL

- FILL MATERIAL
- CLAY: SANDY TO VERY SANDY, LOW TO MEDIUM PLASTIC, MEDIUM STIFF, VERY MOIST, BROWN
- SAND : CLAY
- SAND: SILTY WITH SOME GRAVEL, FINE TO COARSE GRAINED, LOOSE TO MEDIUM DENSE, BROWN, DRY TO MOIST
- WEATHERED CLAYSTONE/SILTSTONE
- SANDSTONE BEDROCK: MEDIUM TO HIGH PLASTIC, MEDIUM TO VERY HARD, MOIST, GRAY TO BROWN AND GRAY TO BLUE WITH SOME IRON STAINING
- CLAYSTONE/SILTSTONE BEDROCK: MEDIUM TO HIGH PLASTIC, MEDIUM TO VERY HARD, MOIST, GRAY TO BROWN AND GRAY TO BLUE WITH SOME IRON STAINING

LEGEND

- 23/12 — DRIVE SAMPLE BLOW COUNT, INDICATES BLOWS PER FOOT (E G 23) OR BLOWS PER INCHES (E G 50/2") OF A 140-POUND HAMMER FALLING 30 INCHES
- SHELBY TUBE, 3 INCH I D
- CORE SAMPLE
- DRIVE SAMPLE, 2-INCH I D CALIFORNIA LINER SAMPLE
- DRIVE SAMPLE, STANDARD SPLIT SPOON
- DRIVE SAMPLE, 2-1/2 INCH I D RING SAMPLE
- B5 — INDICATES TEST HOLE NUMBER AND APPROXIMATE LOCATION
- GROUND WATER LEVEL WHEN MEASURED

N

APPROXIMATE SCALE: 1"=40'

S:\Tranproj\246177-00\HwyDes\Plans\bregO1.dgn 12:55:24 PM 5/30/2006

Project Mngr: CJH	ISSUE RECORD	DOUGLAS COUNTY	Terracon	As Constructed	QUEBEC/C470 BRIDGE WIDENING ENGINEERING GEOLOGY	Project No./Code 25045043
Checked By: CJH	No. / Description / Date:			No Revisions:		File Name: Engineering Geology.dwg
Approved By: MEA				Revised:		
Drawn By: RBM				Void:	Structure Number: F-17-HJ/QT/QS B6	Drawing Number: 39 --
Date: 4/23/04						

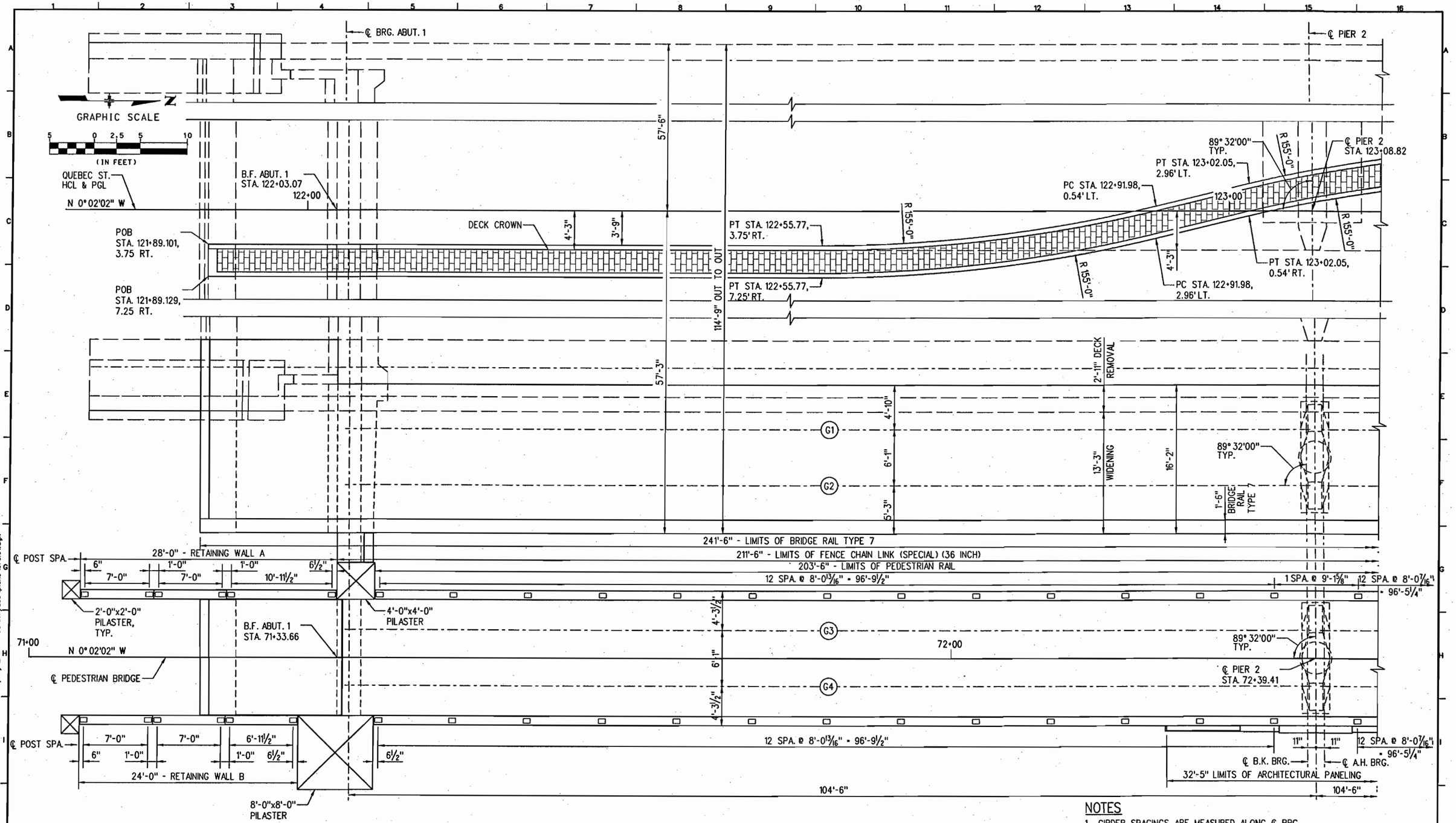

NOTES

1. GIRDER SPACINGS ARE MEASURED ALONG ℄ BRG.
2. FOR MEDIAN GEOMETRY, SEE ROADWAY PLANS.

PRELIMINARY
SUBJECT TO REVISION

Design			
Designed By	SA	02/06	
Checked By			

Detail			
Detailed By	ERS	2/06	
Checked By			

Quantities			
Quantities By			
Checked By			

Revision Dates (Preliminary Stage Only)

s:\tranproj\246177-00\hwydes\plans\brcl01.dgn
12:49:30 PM
5/30/2006

Computer File Information	
Creation Date: 02/28/06	Initials: ERS
Last Modification Date: 03/17/06	Initials: ERS
FullPath: S:\Tranproj\ 246177-00\HwyDes\Plans\	
Drawing File Name: brcl01.dgn	
CAD Ver. MicroStation V8 Scale: 1"=20'-0"	Units: ENGLISH

Sheet Revisions

DOUGLAS COUNTY
Department of Public Works
100 Third Street
Castle Rock, CO 80104
Phone: (303) 660-7490
FAX: (303) 688-9343

PBSJ
4601 DTC Blvd.
Suite 700
Denver, CO 80237
Phone: 303/221-7275
Fax: 303/221-7276

As Constructed
No Revisions:
Revised:
Void:

QUEBEC OVER C470
CONSTRUCTION LAYOUT (1 OF 2)

Designer:	S. Abraham	Structure Numbers	F-17-HJ
Detailer:	E. Schawo		F-17-QT
Sheet Subset:	BRIDGE	Subset Sheets:	B7 of 41

Project No./Code
C.I. 03-013

Sheet Number 40

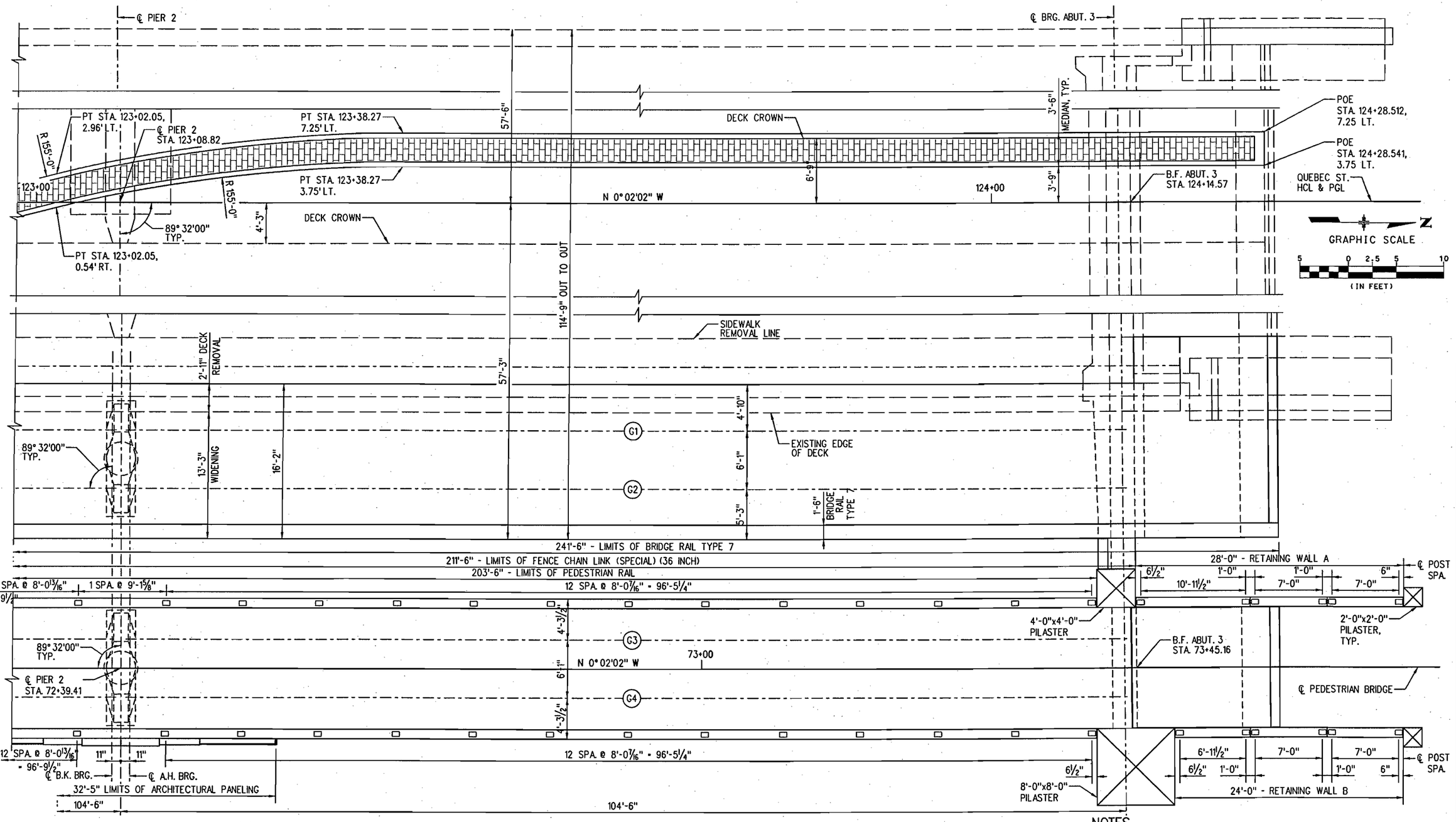

NOTES

1. GIRDER SPACINGS ARE MEASURED ALONG ℄ BRG.
2. FOR MEDIAN GEOMETRY, SEE ROADWAY PLANS.

PLAN

PRELIMINARY
SUBJECT TO REVISION

Design			
Designed By	SA	Checked By	
DATE	02/06		

Detail			
Detailed By	ERS	Checked By	
DATE	02/06		

Quantities			
Quantities By		Checked By	
INITIAL		DATE	

Revision Dates (Preliminary Stage Only)

s:\tranproj\246177-00\hwydes\plans\brcl02.dgn
12:49:36 PM
5/30/2006

Computer File Information		
Creation Date: 02/28/06	Initials: ERS	
Last Modification Date: 03/17/06	Initials: ERS	
Full Path: S:\Tranproj\ 246177-00\HwyDes\Plans\		
Drawing File Name: brcl01.dgn		
CAD Ver. MicroStation V8	Scale: 1"=20'-0"	Units: ENGLISH

Sheet Revisions

DOUGLAS COUNTY
Department of Public Works
100 Third Street
Castle Rock, CO 80104
Phone: (303) 660-7490
FAX: (303) 688-9343

PBSJ
4601 DTC Blvd.
Suite 700
Denver, CO 80237
Phone: 303/221-7275
Fax: 303/221-7276

As Constructed
No Revisions:
Revised:
Void:

QUEBEC OVER C470
CONSTRUCTION LAYOUT (2 OF 2)

Designer:	S. Abrahom	Structure Numbers	F-17-HJ
Detailer:	E. Schowo		F-17-QT
Sheet Subset:	BRIDGE	Subset Sheets:	B8 of 41

Project No./Code
C.I. 03-013

Sheet Number 41

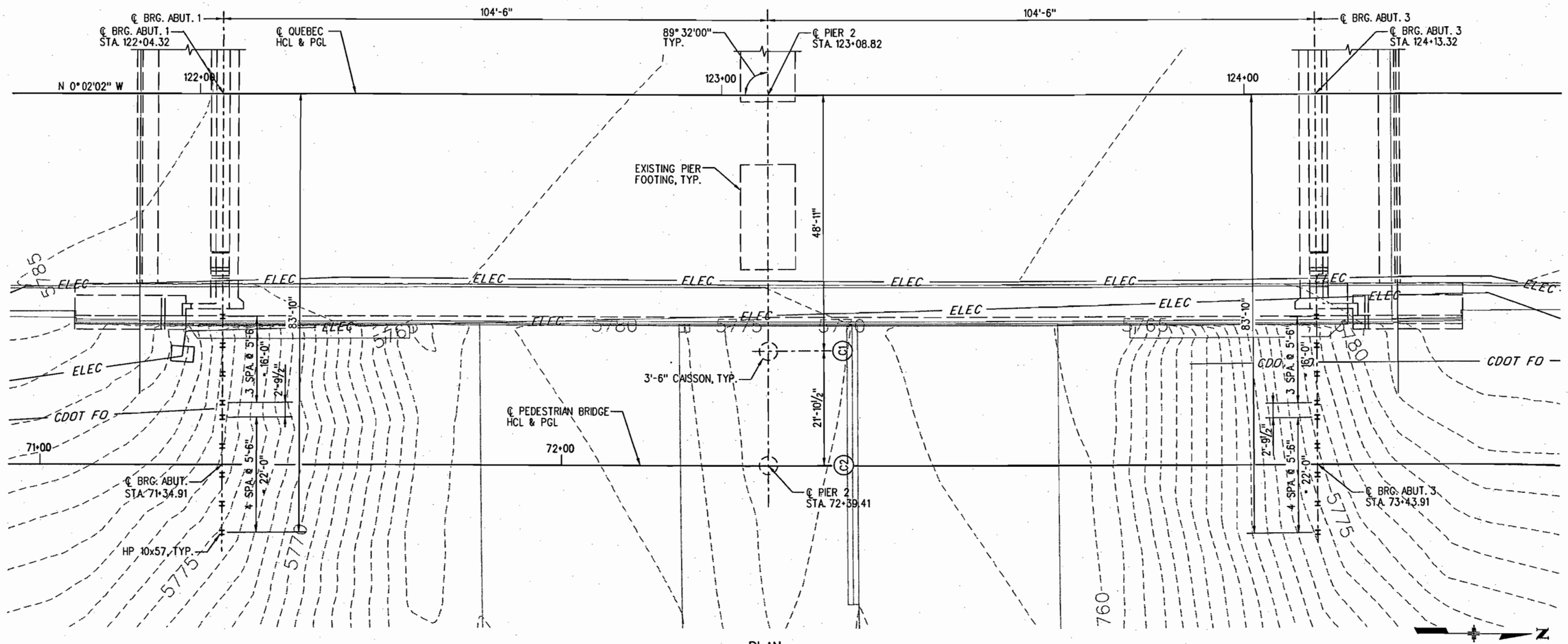

PLAN

(ORIGINAL GROUND CONTOURS SHOWN)

GRAPHIC SCALE

10 0 5 10 20

(IN FEET)

CAISSON SUMMARY TABLE

LOCATION	CAISSON NUMBER	CAISSON SIZE	TOP OF CAISSON ELEV.	ESTIMATED BEDROCK ELEV.	MINIMUM PENETRATION INTO BEDROCK (FT.)	ESTIMATED TIP ELEV.	FACTORED MAXIMUM LOAD (TONS)	UNFACTORED MAXIMUM LOAD (TONS)
PIER 2	C1	42"ø	5758.5	5743.0	18.5	5724.5	522.1	459.3
	C2	42"ø	5758.5	5743.0	15.5	5724.5	466.5	376.5

PILE SUMMARY TABLE

BRIDGE	LOCATION	SIZE	PILE CUTOFF ELEV.	ESTIMATED TIP ELEV.	FACTORED MAXIMUM LOAD (TONS)	UNFACTORED MAXIMUM LOAD (TONS)	TYPE
QUEBEC BRIDGE WIDENING	ABUT. 1	HP 10x57	5777.2	5752.7	88.5	64.0	END BEARING
	ABUT. 3	HP 10x57	5775.1	5754.8	88.5	64.0	END BEARING
PEDESTRIAN BRIDGE	ABUT. 1	HP 10x57	5777.2	5752.7	75.0	57.5	END BEARING
	ABUT. 3	HP 10x57	5775.1	5754.8	75.0	57.5	END BEARING

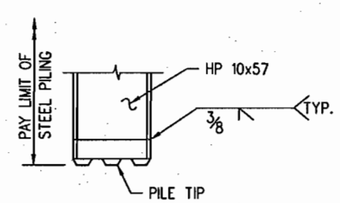

PILE REINFORCING TIP

NOTES

1. TEMPORARY STEEL CASINGS AND DEWATERING MAY BE REQUIRED. CASING AND DEWATERING SHALL BE INCLUDED IN ITEM 503.
2. REMOVE EXISTING BRIDGE 1'-0" MIN. BELOW FINISHED GROUND LINE IN ACCORDANCE WITH SECTION 202.
3. PORTIONS OF EXISTING SUBSTRUCTURE THAT INTERFERE WITH CONSTRUCTION OF NEW PILES SHALL BE REMOVED AS NECESSARY TO INSTALL NEW PILES. METHOD OF REMOVAL AND SUBSURFACE STABILIZATION MUST BE APPROVED BY THE ENGINEER PRIOR TO CONSTRUCTION COST OF REMOVAL AND SUBSURFRACE STABILIZATION SHALL BE INCLUDEED IN ITEM 202, REMOVAL OF STRUCTURE.
4. ALL PILING DIMENSIONS SHOWN ARE AT BOTTOM OF CONCRETE.
5. FOR CAISSON DETAILS, SEE DWG. NO. B17.

PRELIMINARY
SUBJECT TO REVISION

Revision Dates (Preliminary Stage Only)

Detail	INITIAL	DATE	Quantities	INITIAL	DATE
Detailed By	ERS	02/06	Quantities By		
Checked By			Checked By		

Design	INITIAL	DATE
Designed By	SA	08/05
Checked By		

s:\Tranproj\246177-00\hwydes\plans\brf101.dgn 12:49:42 PM 5/30/2006

Computer File Information		
Creation Date: 02/28/06	Initials: ERS	
Last Modification Date: 03/23/06	Initials: ERS	
Full Path: S:\Tranproj\ 246177-00\HwyDes\Plans\		
Drawing File Name: brf101.dgn		
CAD Ver. MicroStation V8	Scale: 1"=20'-0"	Units: ENGLISH

Sheet Revisions

DOUGLAS COUNTY
Department of Public Works
100 Third Street
Castle Rock, CO 80104
Phone: (303) 660-7490
FAX: (303) 688-9343

PBSJ
4601 DTC Blvd.
Suite 700
Denver, CO 80237
Phone: 303/221-7275
Fax: 303/221-7276

As Constructed
No Revisions:
Revised:
Void:

QUEBEC OVER C470
FOUNDATION LAYOUT

Designer: S. Abraham
Detailer: E. Schawo
Structure Numbers: F-17-HJ, F-17-QT
Sheet Subset: BRIDGE
Subset Sheets: B9 of 41

Project No./Code
C.I. 03-013

Sheet Number 42

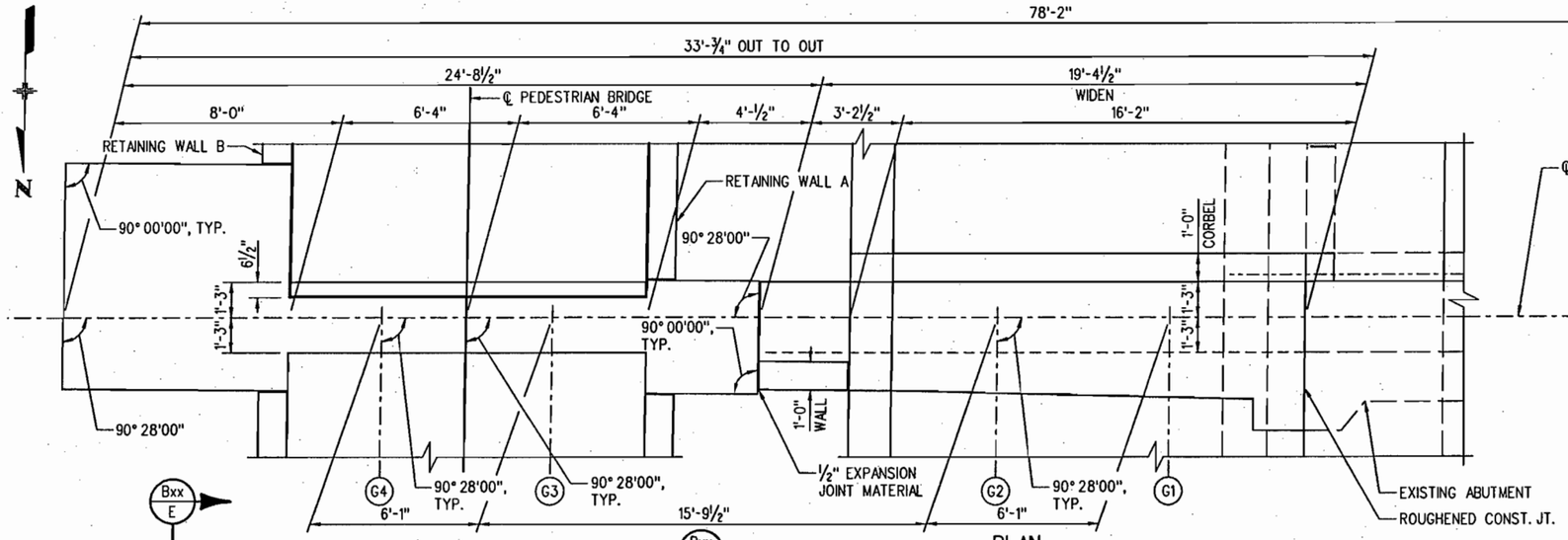

PLAN

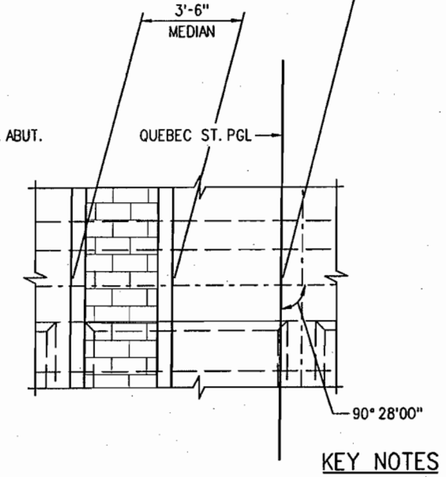

KEY NOTES

(1) DRILL AND GROUT DOWELS 2'-0" INTO EXISTING ABUTMENT. SPACE DOWELS WITH NEW TRANSVERSE REINFORCING.

NOTES

1. ELEVATIONS SHOWN ARE AT ℄ BEARING. GIRDER SEAT ELEVATIONS ARE AT ℄ BEARING AT ℄ BOTTOM FLANGE.
2. FOR PILE LAYOUT, SEE DWG. NO. B9.
3. HORIZONTAL DIMENSIONS MEASURED ALONG ℄ BRG. ABUT.

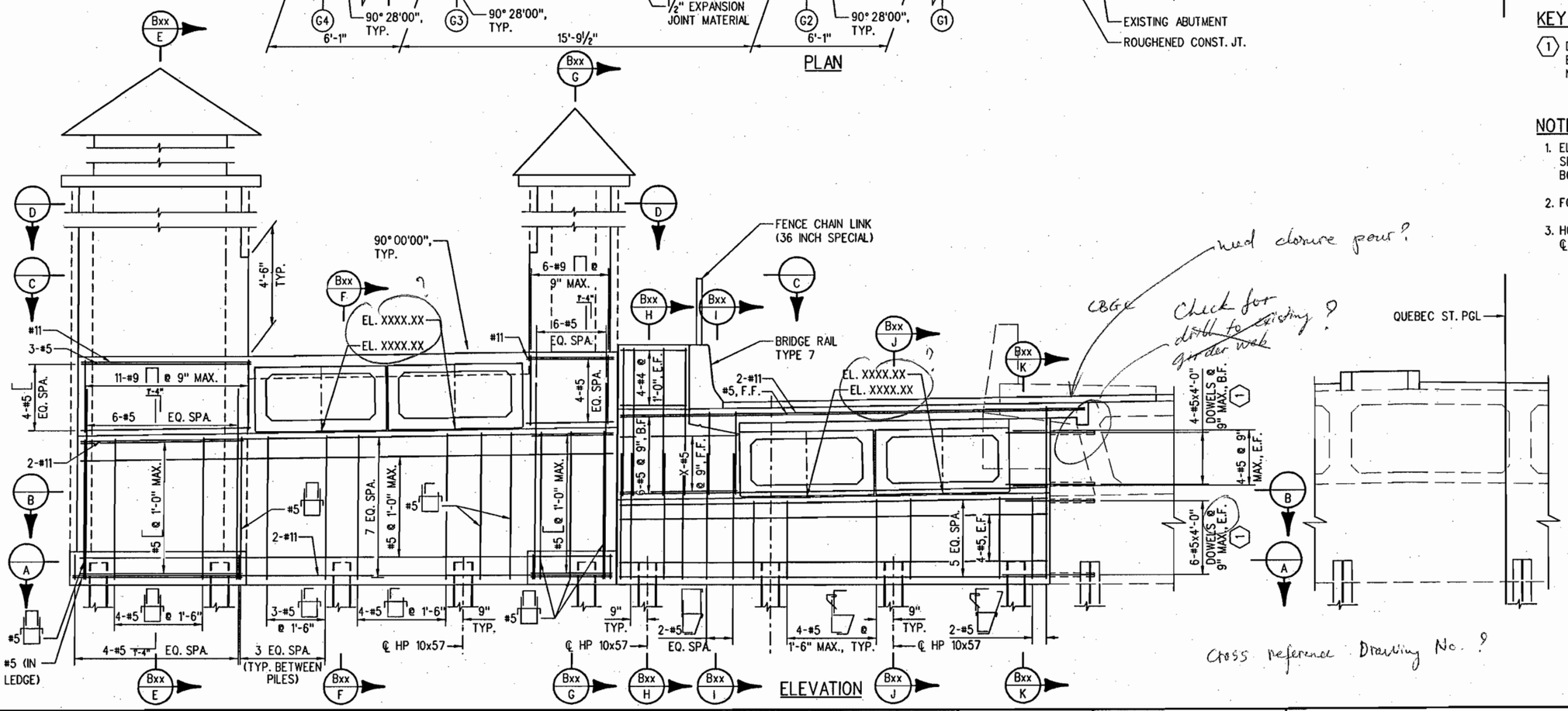

need closure pour?

CBGE

Check for drill to existing girder web?

Cross reference Drawing No. ?

ELEVATION

PRELIMINARY
SUBJECT TO REVISION

Revision Dates (Preliminary Stage Only)

Quantities	INITIAL	DATE
By		
By		

Detail	INITIAL	DATE
Detailed By	ERS	2/06
Checked By		
Quantities By		
Checked By		

Design	INITIAL	DATE
Designed By	SA	8/05
Checked By		

s:\tranproj\246177-00\hwydes\plans\brab01.dgn
12:49:47 PM
5/30/2006

Computer File Information	
Creation Date: 02/28/06	Initials: ERS
Last Modification Date: 02/28/06	Initials: ERS
Full Path: S:\Tranproj\ 246177-00\HwyDes\Plans\	
Drawing File Name: brab01.dgn	
CAD Ver. MicroStation V8 Scale: 1"=XX'-0"	Units: ENGLISH

Sheet Revisions

DOUGLAS COUNTY
Department of Public Works
100 Third Street
Castle Rock, CO 80104
Phone: (303) 660-7490
FAX: (303) 688-9343

PBSJ
4601 DTC Blvd.
Suite 700
Denver, CO 80237
Phone: 303/221-7275
Fax: 303/221-7276

As Constructed
No Revisions:
Revised:
Void:

QUEBEC OVER C470
ABUTMENT 1

Designer:	S. Abraham	Structure Numbers	F-17-HJ
Detailer:	E. Schowo		F-17-QT
Sheet Subset:	BRIDGE	Subset Sheets: B10 of 41	

Project No./Code
C.I. 03-013
Sheet Number 43

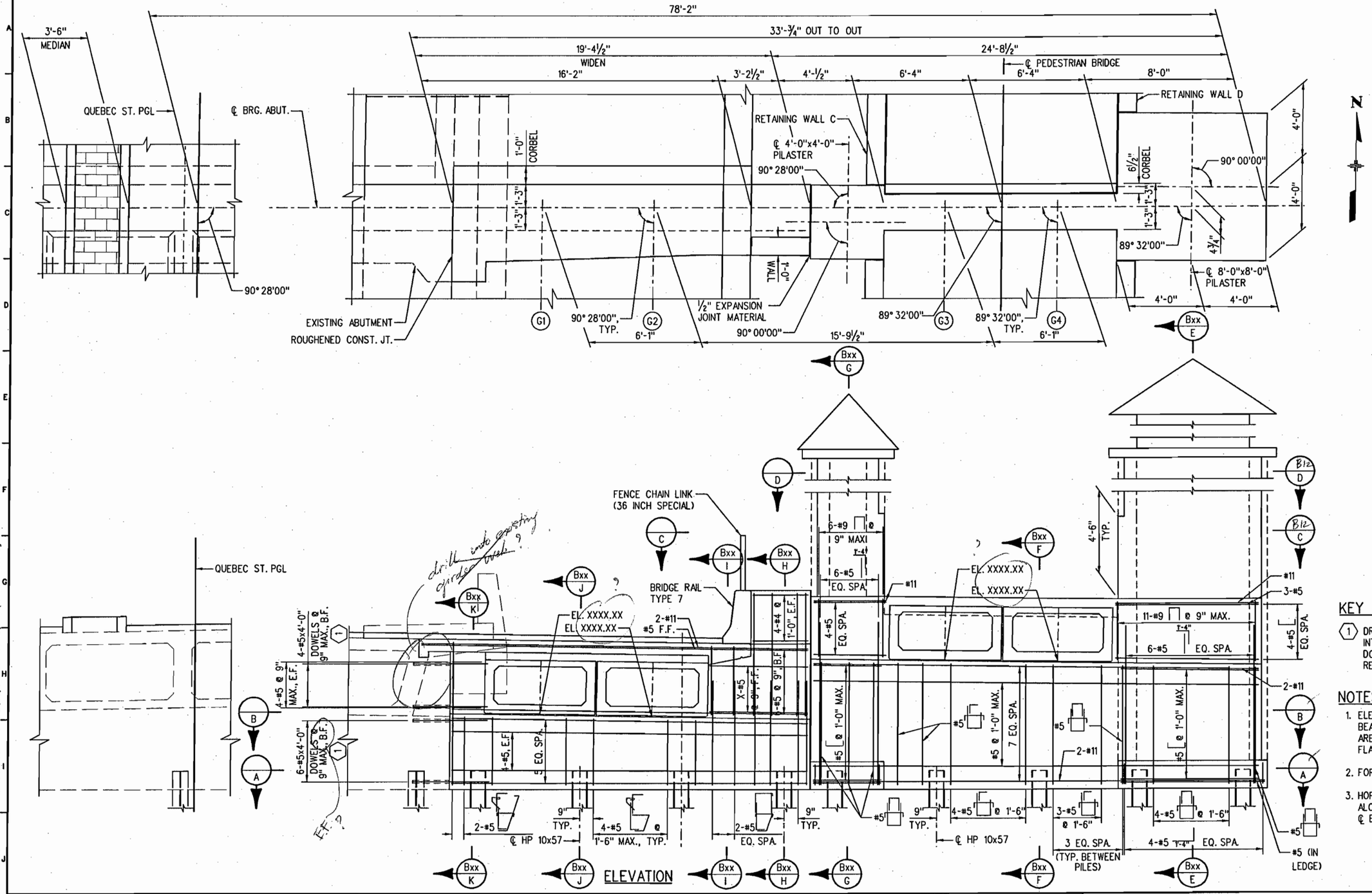

KEY NOTES

(1) DRILL AND GROUT DOWELS 2'-0" INTO EXISTING ABUTMENT. SPACE DOWELS WITH NEW TRANSVERSE REINFORCING.

NOTES

1. ELEVATIONS SHOWN ARE AT ℄ BEARING. GIRDER SEAT ELEVATIONS ARE AT ℄ BEARING AT ℄ BOTTOM FLANGE.
2. FOR PILE LAYOUT, SEE DWG. NO. B9.
3. HORIZONTAL DIMENSIONS MEASURED ALONG ℄ BRG. ABUT.

PRELIMINARY
SUBJECT TO REVISION

Design	INITIAL	DATE
Designed By	SA	8/05
Checked By		

Detail	INITIAL	DATE
Detailed By	ERS	2/06
Checked By		

Quantities	INITIAL	DATE
Quantities By		
Checked By		

Revision Dates (Preliminary Stage Only)

12:49:52 PM s:\tranproj\246177-00\hwydes\plans\brab01a.dgn

5/30/2006

Computer File Information	
Creation Date: 02/28/06	Initials: ERS
Last Modification Date: 02/28/06	Initials: ERS
Full Path: S:\Tranproj\ 246177-00\HwyDes\Plans\	
Drawing File Name: brab01.dgn	
CAD Ver. MicroStation V8 Scale: 1"=XX'-0"	Units: ENGLISH

Sheet Revisions

DOUGLAS COUNTY
Department of Public Works
100 Third Street
Castle Rock, CO 80104
Phone: (303) 660-7490
FAX: (303) 688-9343

PBSJ
4601 DTC Blvd.
Suite 700
Denver, CO 80237
Phone: 303/221-7275
Fax: 303/221-7276

As Constructed
No Revisions:
Revised:
Void:

QUEBEC OVER C470
ABUTMENT 3

Designer:	S. Abraham	Structure Numbers	F-17-HJ
Detailer:	E. Schawo		F-17-QT
Sheet Subset:	BRIDGE	Subset Sheets:	B11 of 41

Project No./Code
C.I. 03-013

Sheet Number 44

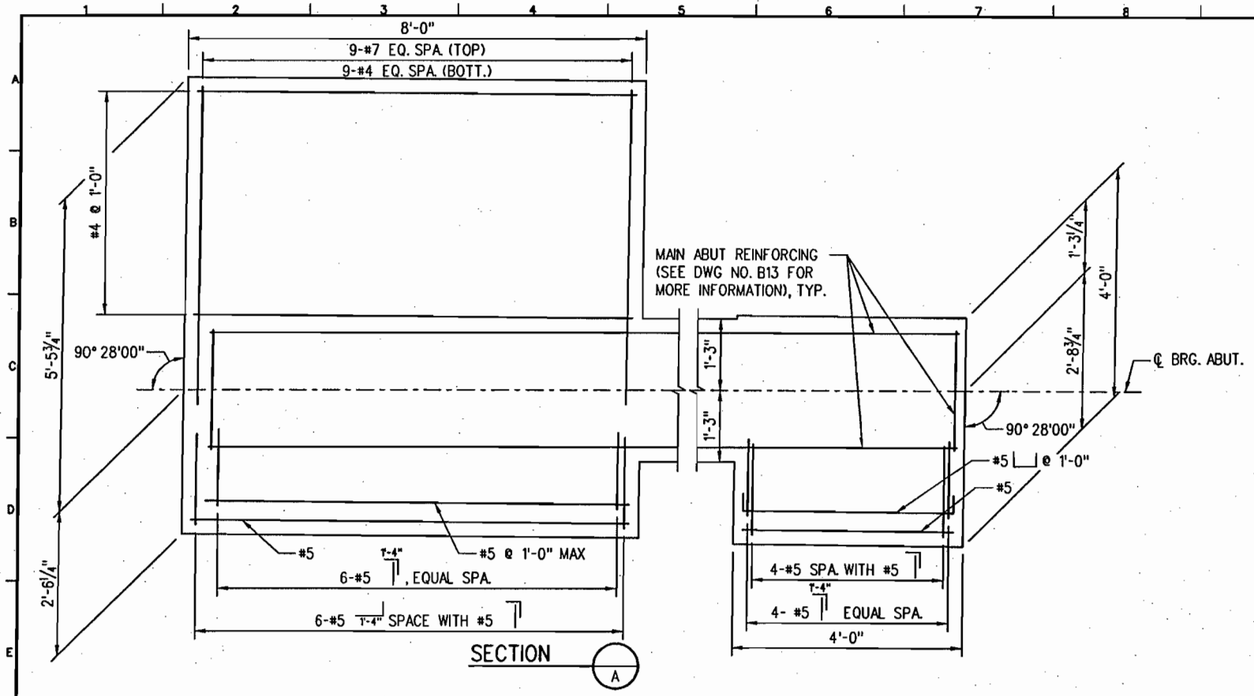

SECTION A

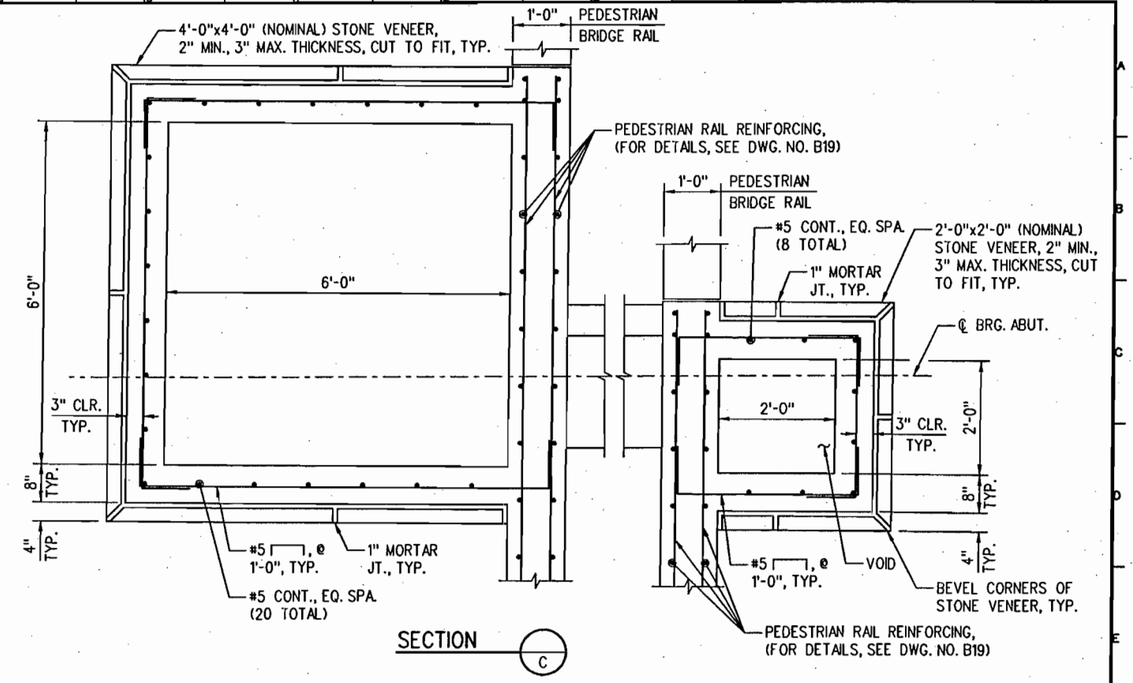

SECTION C

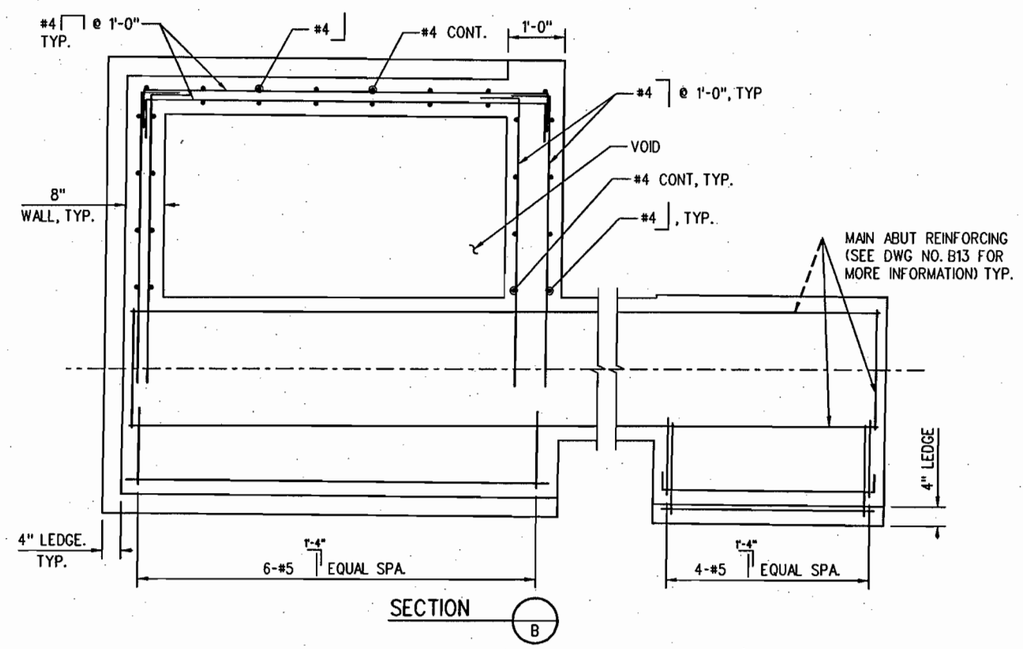

SECTION B

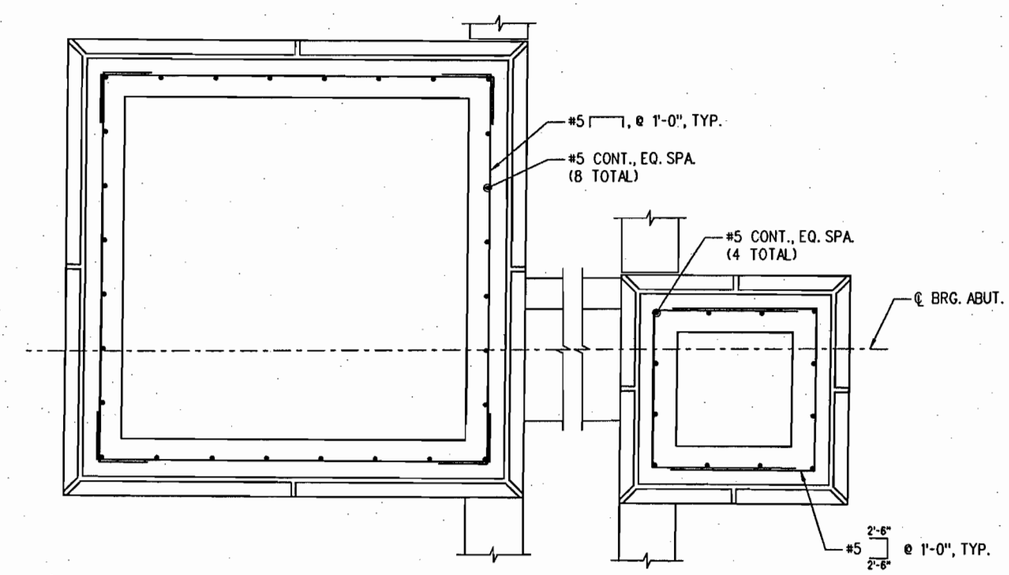

SECTION D

(DIMENSIONS SIMILAR TO "SECTION C", EXCEPT AS NOTED)

PRELIMINARY
SUBJECT TO REVISION

Computer File Information		
Creation Date: 04/10/06	Initials: ERS	
Last Modification Date: 04/10/06	Initials: ERS	
Full Path: S:\Tranproj\ 246177-00\HwyDes\Plans\		
Drawing File Name: brab02.dgn		
CAD Ver. MicroStation V8 Scale: 1"=XX'-0"	Units: ENGLISH	

Sheet Revisions

DOUGLAS COUNTY
Department of Public Works
100 Third Street
Castle Rock, CO 80104
Phone: (303) 660-7490
FAX: (303) 688-9343

PBSJ
4601 DTC Blvd.
Suite 700
Denver, CO 80237
Phone: 303/221-7275
Fax: 303/221-7276

As Constructed
No Revisions:
Revised:
Void:

QUEBEC OVER C470
ABUTMENT DETAILS (1 OF 3)

Designer:	S. Abraham	Structure Numbers	F-17-HJ
Detailer:	E. Schowo		F-17-QT
Sheet Subset:	BRIDGE	Subset Sheets: B12 of 41	

Project No./Code
C.I. 03-013

Sheet Number 45

Revision Dates (Preliminary Stage Only)

Quantities	INITIAL	DATE
Quantities By		
Checked By		

Detail	INITIAL	DATE
Detailed By	ERS	02/06
Checked By		

Design	INITIAL	DATE
Designed By	SA	08/05
Checked By		

s:\tranproj\246177-00\hwydes\plans\brab02.dgn 12:49:57 PM 5/30/2006

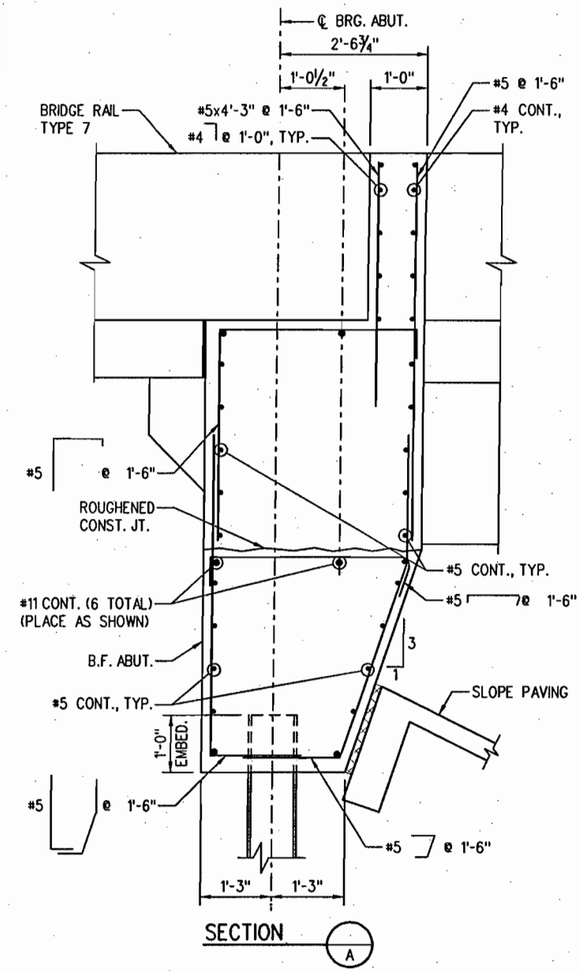

SECTION A

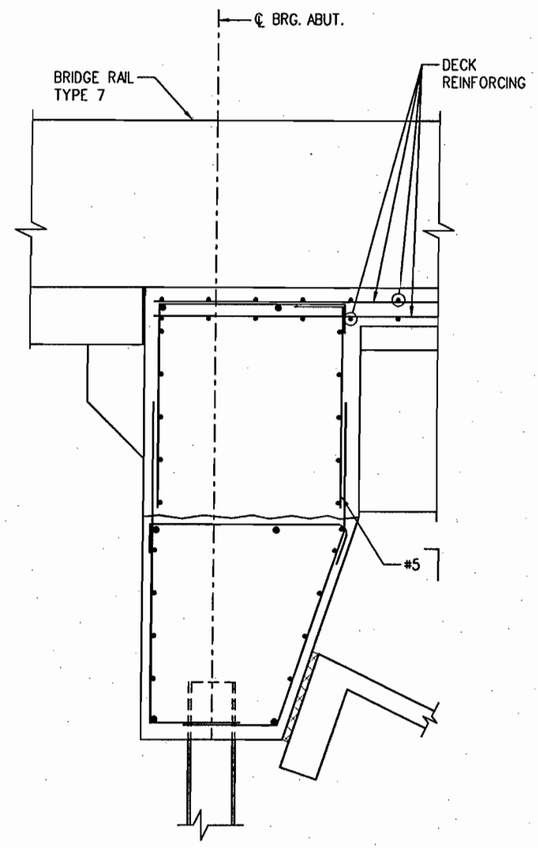

SECTION B

(DIMENSIONS SIMILAR TO "SECTION A", EXCEPT AS SHOWN)
(BRIDGE RAIL TYPE 7 REINFORCING NOT SHOWN)

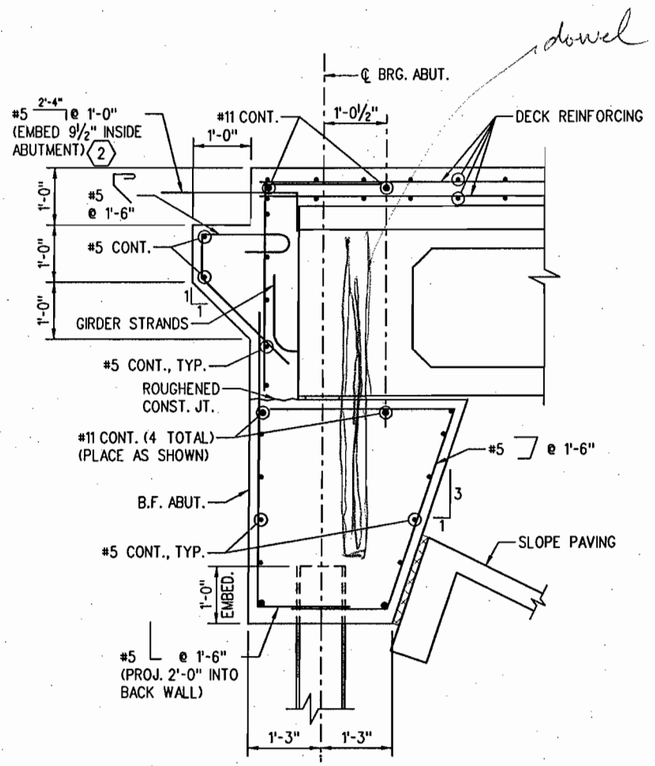

SECTION C

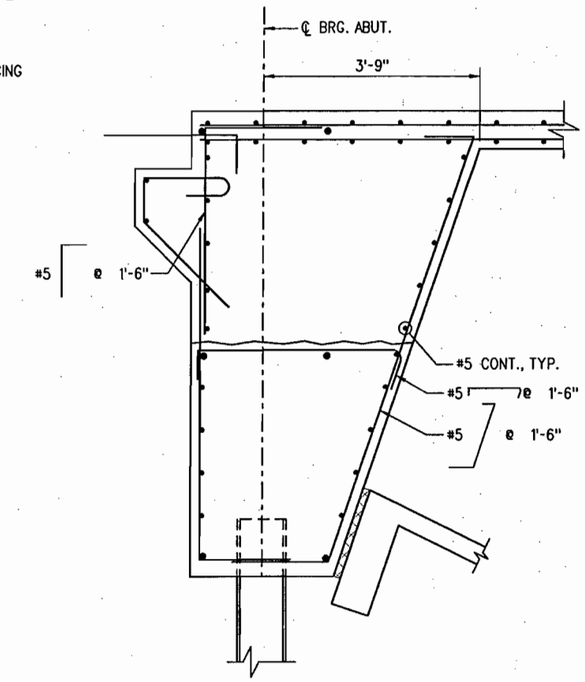

SECTION D

(DIMENSIONS SIMILAR TO "SECTION C", EXCEPT AS SHOWN)

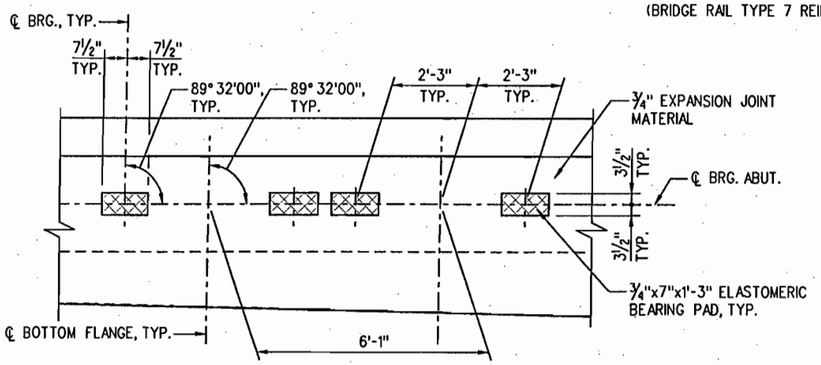

BEARING SEAT DETAIL

KEY NOTES

1. ROTATE LEG TO CLEAR GIRDER.

PRELIMINARY
SUBJECT TO REVISION

Computer File Information		
Creation Date: 02/28/06	Initials: ERS	
Last Modification Date: 04/04/06	Initials: ERS	
Full Path: S:\Tranproj\ 246177-00\HwyDes\Plans\		
Drawing File Name: brab03.dgn		
CAD Ver. MicroStation V8	Scale: 3/4"=1'-0"	Units: ENGLISH

Sheet Revisions

DOUGLAS COUNTY
Department of Public Works
100 Third Street
Castle Rock, CO 80104
Phone: (303) 660-7490
FAX: (303) 688-9343

PBSJ
4601 DTC Blvd.
Suite 700
Denver, CO 80237
Phone: 303/221-7275
Fax: 303/221-7276

As Constructed
No Revisions:
Revised:
Void:

QUEBEC OVER C470
ABUTMENT DETAILS (2 OF 3)

Designer:	S. Abraham	Structure Numbers	F-17-HJ
Detailer:	E. Schawo		F-17-QT
Sheet Subset:	BRIDGE	Subset Sheets: B13 of 41	

Project No./Code
C.I. 03-013

Sheet Number 46

Design	INITIAL	DATE
Designed By	SA	8/05
Checked By		

Detail	INITIAL	DATE
Detailed By	ERS	2/06
Checked By		

Quantities	INITIAL	DATE
Quantities By		
Checked By		

Revision Dates (Preliminary Stage Only)

s:\tranproj\246177-00\hwydes\plans\brab04.dgn
12:50:07 PM 5/30/2006

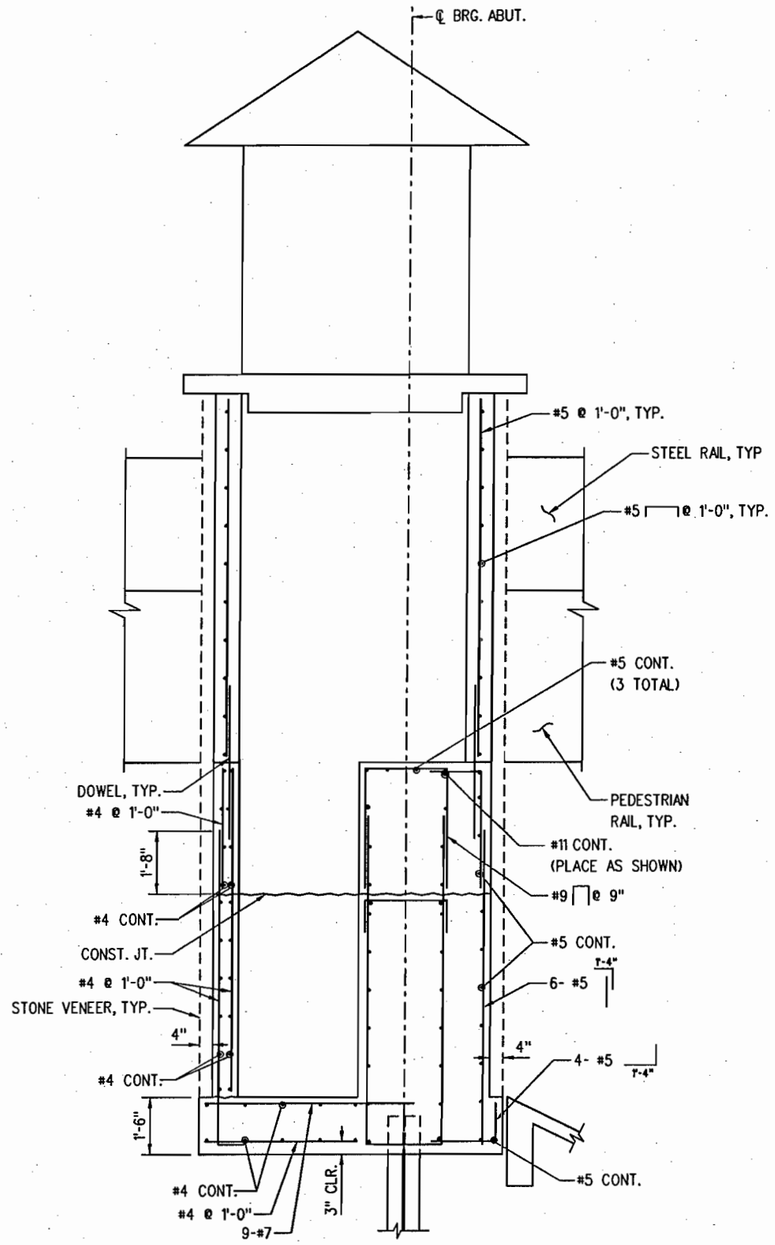

SECTION E

(DIMENSIONS SIMILAR TO "SECTION F" EXCEPT AS SHOWN)

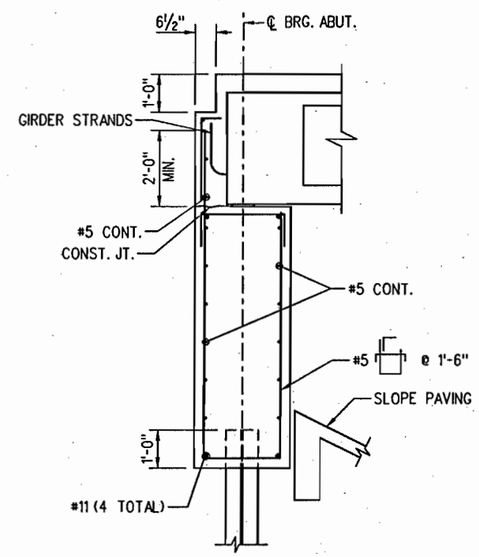

SECTION F

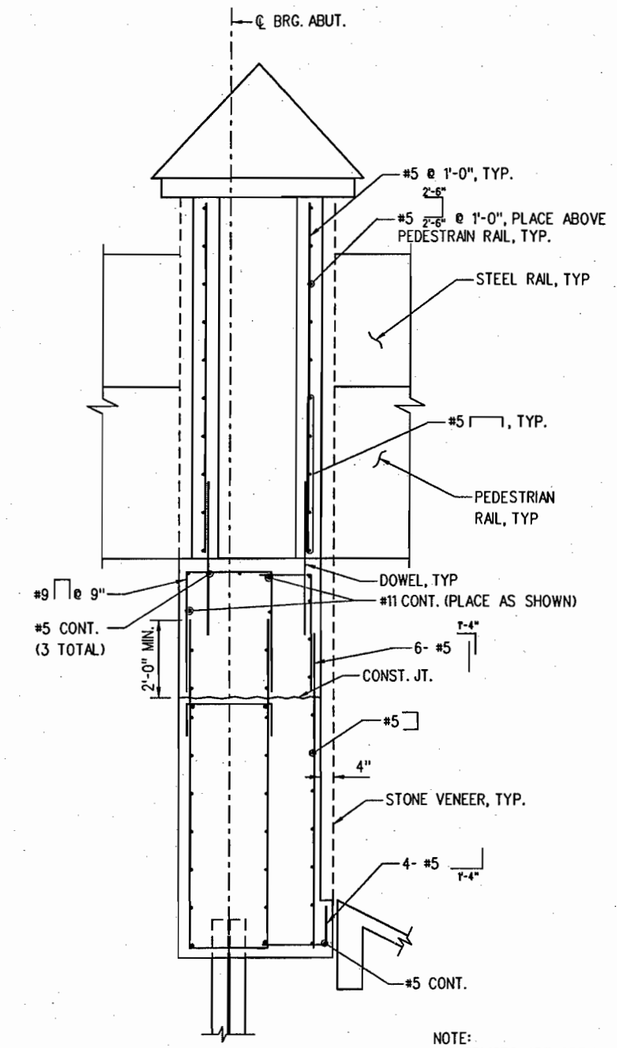

NOTE:
ALL SPLICES ARE OPTIONAL

SECTION G

(DIMENSIONS SIMILAR TO "SECTION F" EXCEPT AS SHOWN)

PRELIMINARY
SUBJECT TO REVISION

Revision Dates (Preliminary Stage Only)

Design			
Designed By	INITIAL SA	DATE 8/05	Detailed By
Checked By			Checked By

Detail			
Detailed By	INITIAL ERS	DATE 2/06	Quantities By
Checked By			Checked By

Quantities		
Quantities By	INITIAL	DATE
Checked By		

S:\Tranproj\246177-00\HwyDes\Plans\brab03.dgn
12:57:24 PM
5/30/2006

Computer File Information		
Creation Date: 04/10/06	Initials: ERS	
Last Modification Date: 04/10/06	Initials: ERS	
Full Path: S:\Tranproj\ 246177-00\HwyDes\Plans\		
Drawing File Name: brab03.dgn		
CAD Ver. MicroStation J	Scale: 1"=XX'-0"	Units: ENGLISH

Sheet Revisions		

DOUGLAS COUNTY
Department of Public Works
100 Third Street
Castle Rock, CO 80104
Phone: (303) 660-7490
FAX: (303) 688-9343

PBSJ
4601 DTC Blvd.
Suite 700
Denver, CO 80237
Phone: 303/221-7275
Fax: 303/221-7276

As Constructed
No Revisions:
Revised:
Void:

QUEBEC OVER C470
ABUTMENT DETAILS (3 OF 3)

Designer:	S. Abroham	Structure Numbers	F-17-HJ
Detailer:	E. Schawo		F-17-QT
Sheet Subset:	BRIDGE	Subset Sheets: B14 of	

Project No./Code
C.I. 03-013
Sheet Number 47

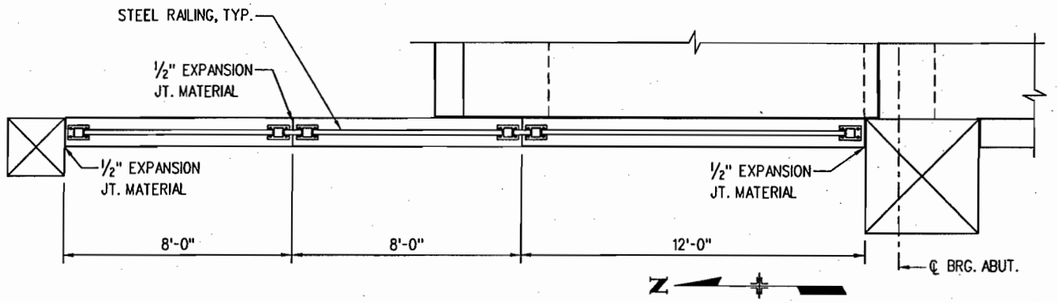

PLAN

(RETAINING WALL C SHOWN, RETAINING WALL A SIMILAR BUT OPPOSITE HAND)
(ROADWAY PAVEMENT NOT SHOWN)

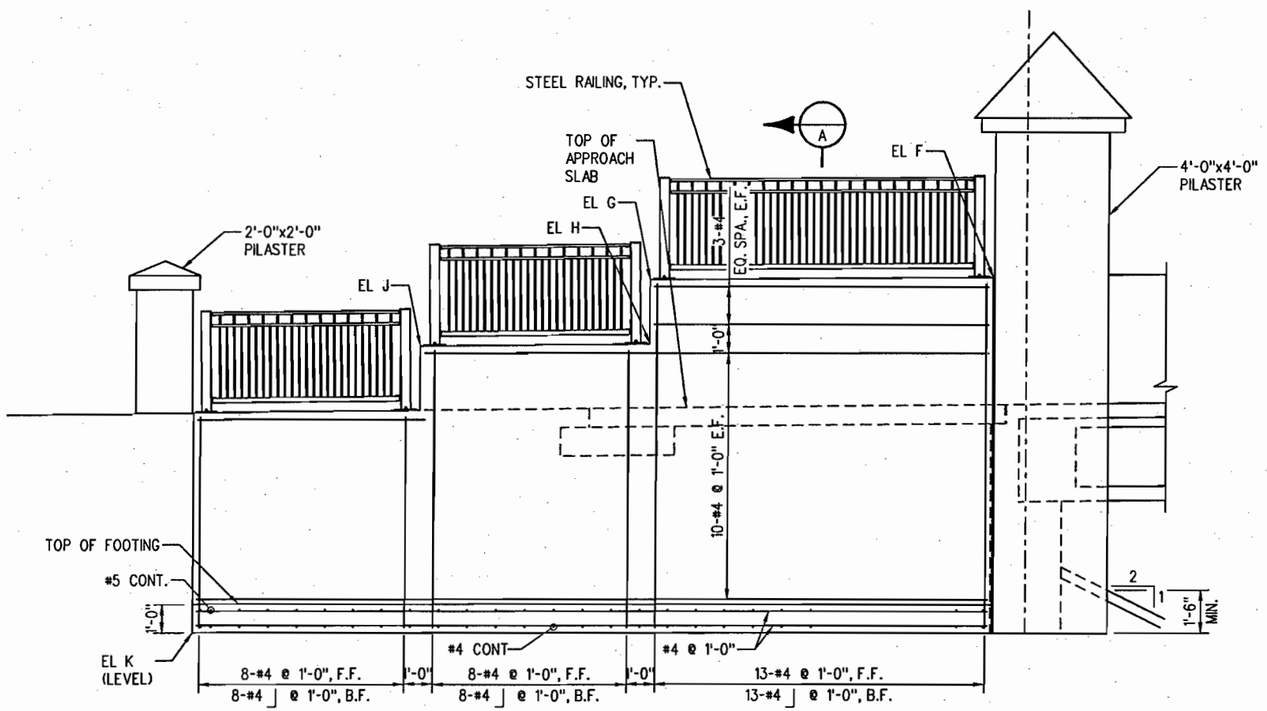

ELEVATION

(RETAINING WALL C SHOWN, RETAINING WALLS A SIMILAR BUT OPPOSITE HAND)
(STEEL RAILING NOT SHOWN FOR CLARITY)

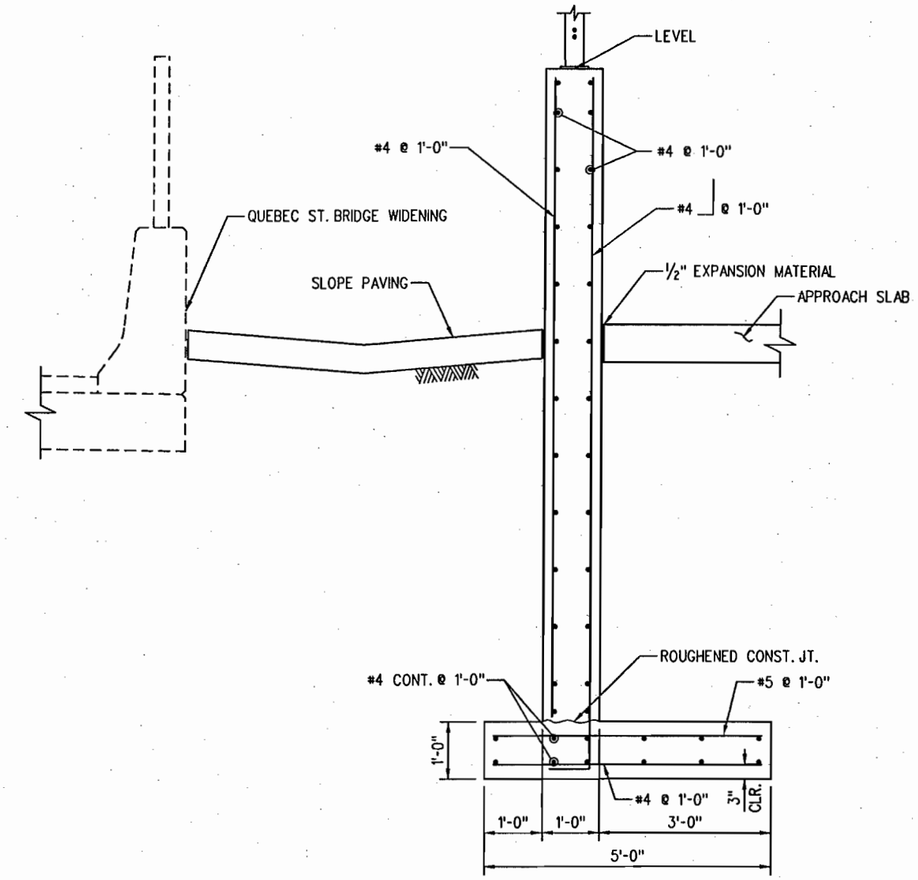

SECTION A

SCALE: 3/8"=1'0"

ELEVATION TABLE

	EL F	EL G	EL H	EL J	EL K
WALL A	5791.16	5791.28	5789.03	5789.11	5782.60
WALL C	5789.04	5788.93	5786.68	5786.55	5780.20

NOTES

1. RETAINING WALLS SHALL BE CONCRETE CLASS D (BRIDGE).
2. EXPANSION JOINT MATERIAL SHALL BE INCLUDED IN THE COST OF ITEM 601 CONCRETE CLASS D (BRIDGE).
3. FOR PILASTER DETAILS, SEE DWG. NO. B14.

PRELIMINARY
SUBJECT TO REVISION

Design	INITIAL	DATE
Designed By	SA	8/05
Checked By		

Detail	INITIAL	DATE
Detailed By	ERS	2/06
Checked By		

Quantities	INITIAL	DATE
Quantities By		
Checked By		

Revision Dates (Preliminary Stage Only)

s:\tranproj\246177-00\hwydes\plans\brrw02.dgn 12:50:17 PM 5/30/2006

Computer File Information	
Creation Date: 04/10/06	Initials: ERS
Last Modification Date: 04/10/06	Initials: ERS
Full Path: S:\Tranproj\ 246177-00\HwyDes\Plans\	
Drawing File Name: brrw01.dgn	
CAD Ver. MicroStation V8 Scale: 3/16"=1'-0"	Units: ENGLISH

Sheet Revisions

DOUGLAS COUNTY
Department of Public Works
100 Third Street
Castle Rock, CO 80104
Phone: (303) 660-7490
FAX: (303) 688-9343

PBSJ
4601 DTC Blvd.
Suite 700
Denver, CO 80237
Phone: 303/221-7275
Fax: 303/221-7276

As Constructed
No Revisions:
Revised:
Void:

QUEBEC OVER C470
RETAINING WALLS A & C

Designer:	S. Abraham	Structure Numbers	F-17-HJ
Detailer:	E. Schawo		F-17-QT
Sheet Subset:	BRIDGE	Subset Sheets: B15 of 41	

Project No./Code
C.I. 03-013

Sheet Number 48

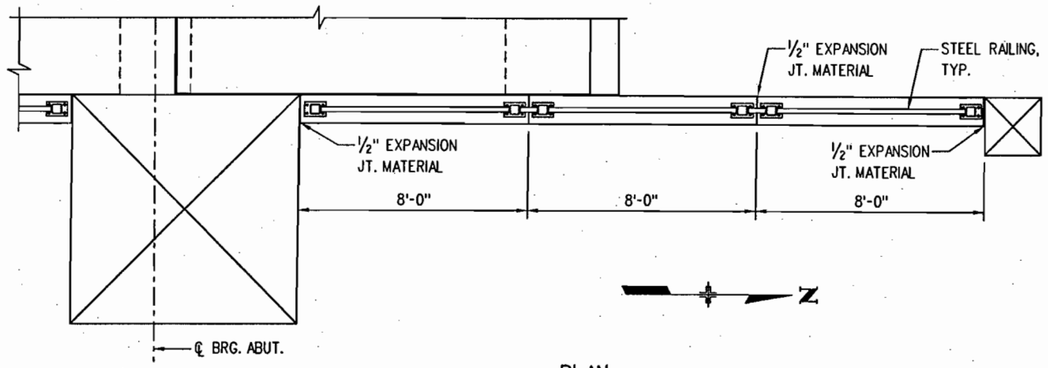

PLAN

(RETAINING WALL B SHOWN, RETAINING WALL D SIMILAR BUT OPPOSITE HAND)
(ROADWAY PAVEMENT NOT SHOWN)

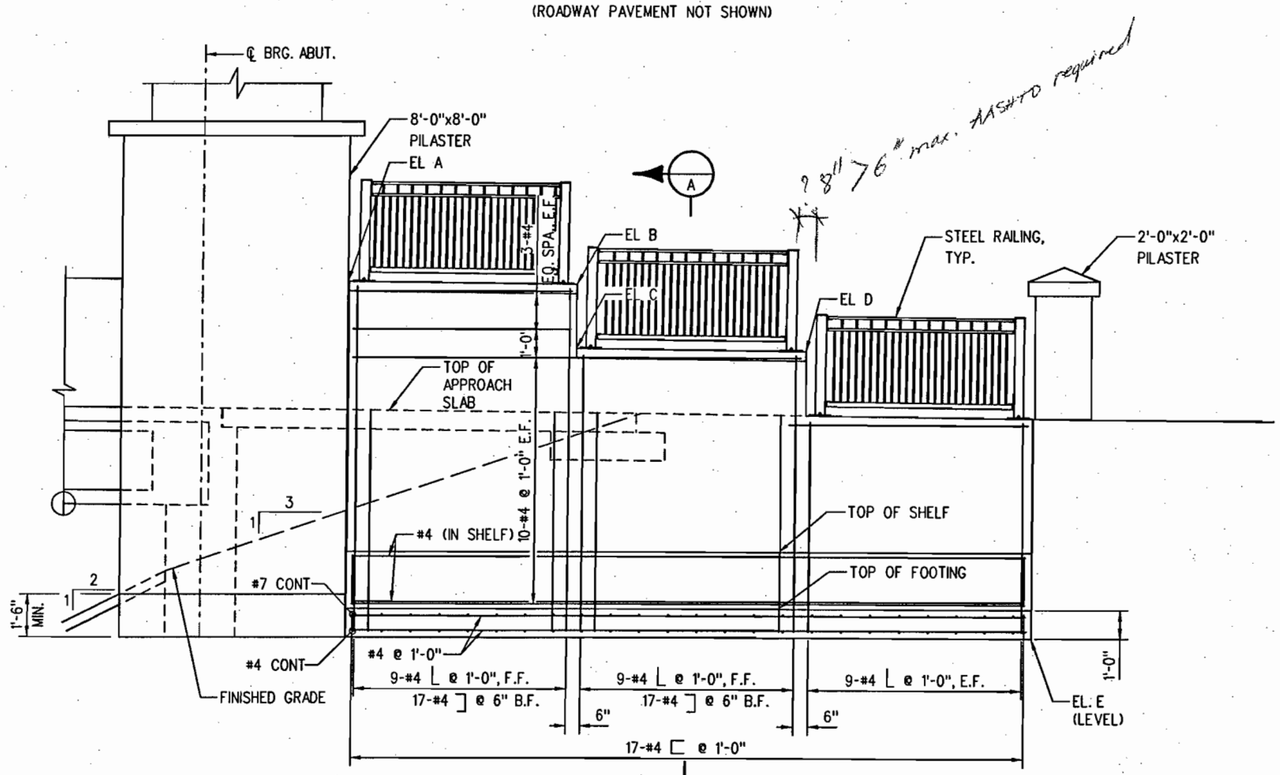

ELEVATION

(RETAINING WALL B SHOWN, RETAINING WALL D SIMILAR BUT OPPOSITE HAND)
(STEEL RAILING NOT SHOWN FOR CLARITY)

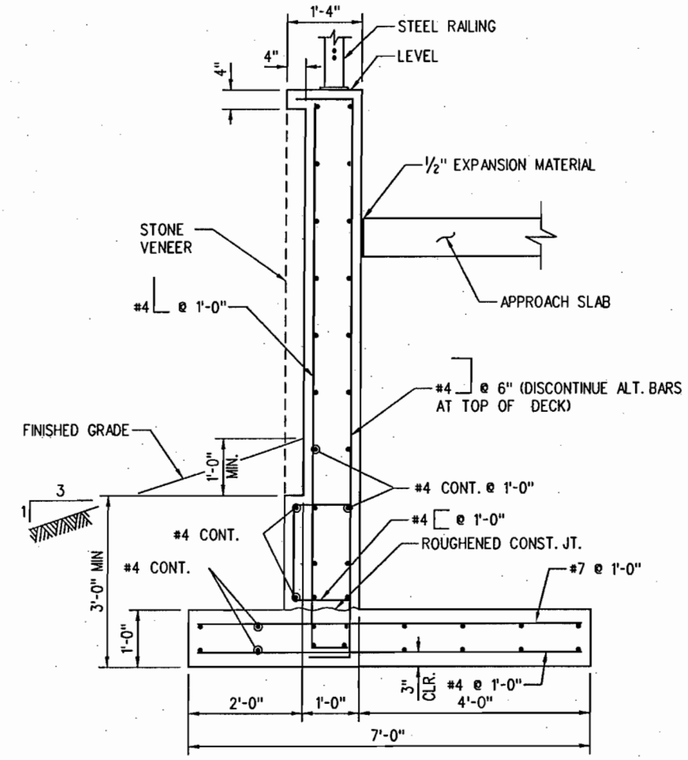

SECTION A

ELEVATION TABLE

	EL A	EL B	EL C	EL D	EL E
WALL B	5791.01	5791.09	5788.84	5788.92	5776.20
WALL D	5788.82	5788.74	5786.47	5786.35	5774.10

NOTES

1. RETAINING WALLS SHALL BE CONCRETE CLASS D (BRIDGE).
2. EXPANSION JOINT MATERIAL SHALL BE INCLUDED IN THE COST OF ITEM 601 CONCRETE CLASS D (BRIDGE).
3. FOR STONE VENEER DETAILS, SEE DWG. NO. B27 & B31.
4. FOR PILASTER DETAILS, SEE DWG. NO. B14.

PRELIMINARY
SUBJECT TO REVISION

Design	INITIAL	DATE
Designed By	SA	8/05
Checked By		

Detail	INITIAL	DATE
Detailed By	ERS	2/06
Checked By		

Quantities	INITIAL	DATE
Quantities By		
Checked By		

Revision Dates (Preliminary Stage Only)

s:\tranproj\246177-00\hwydes\plans\brrw01.dgn
12:50:12 PM
5/30/2006

Computer File Information	
Creation Date: 04/10/06	Initials: ERS
Last Modification Date: 04/10/06	Initials: ERS
Full Path: S:\Tranproj\ 246177-00\HwyDes\Plans\	
Drawing File Name: brrw01.dgn	
CAD Ver. MicroStation V8 Scale:	Units: ENGLISH

Sheet Revisions

DOUGLAS COUNTY
Department of Public Works
100 Third Street
Castle Rock, CO 80104
Phone: (303) 660-7490
FAX: (303) 688-9343

PBSJ
4601 DTC Blvd.
Suite 700
Denver, CO 80237
Phone: 303/221-7275
Fax: 303/221-7276

As Constructed
No Revisions:
Revised:
Void:

QUEBEC OVER C470
RETAINING WALLS B & D

Designer:	S. Abraham	Structure Numbers	F-17-HJ
Detailer:	E. Schawo		F-17-QT
Sheet Subset:	BRIDGE	Subset Sheets:	B16 of 41

Project No./Code
C.I. 03-013

Sheet Number 49

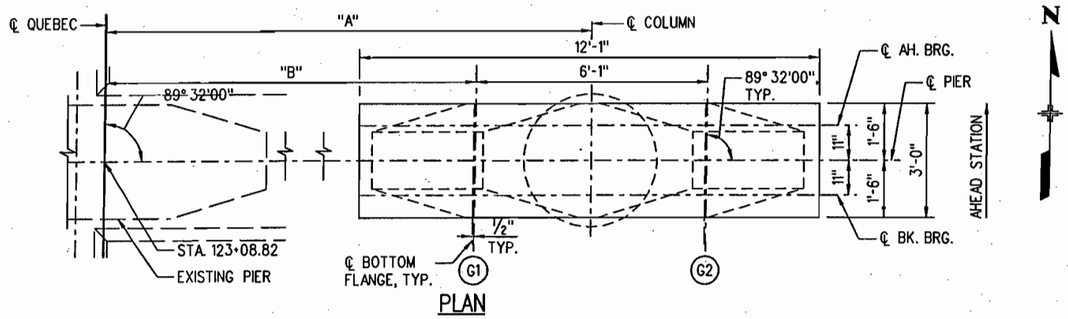

PLAN

(QUEBEC WIDENING PIER SHOWN, PEDESTRIAN PIER SIMILAR)

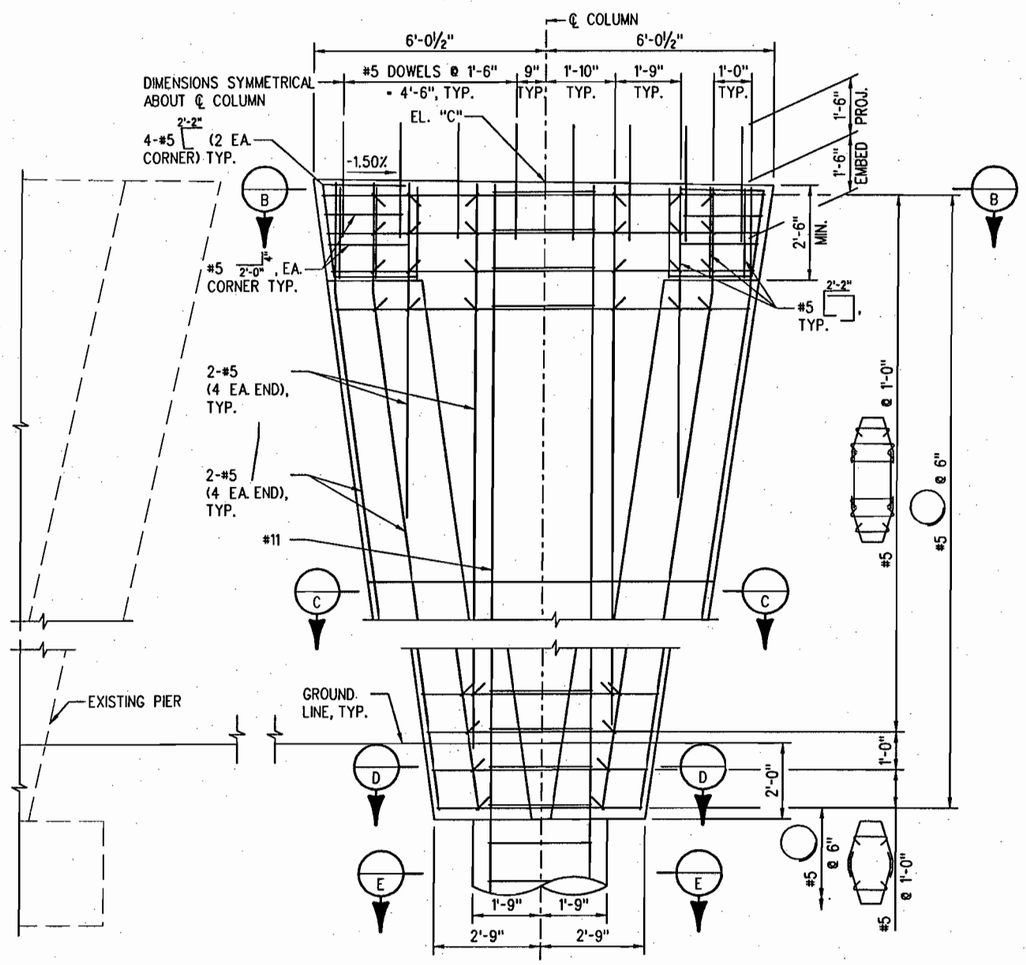

ELEVATION

(QUEBEC WIDENING PIER SHOWN, PEDESTRIAN PIER SIMILAR)

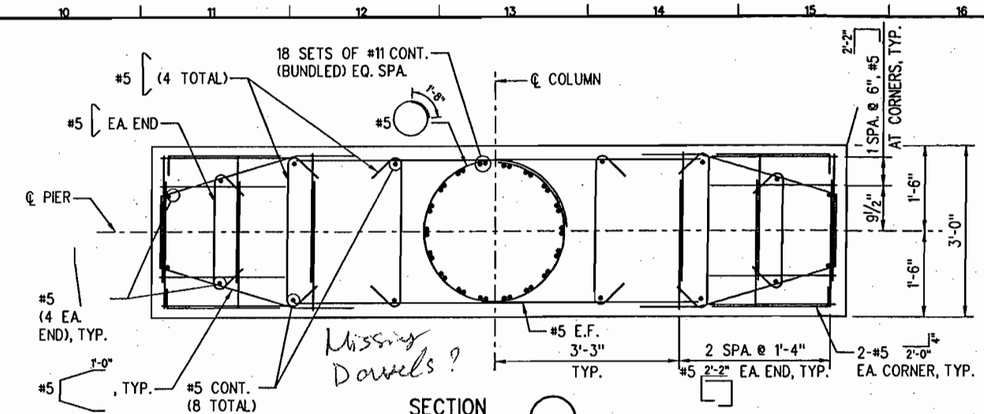

SECTION B

SCALE: 3/4"=1'-0"

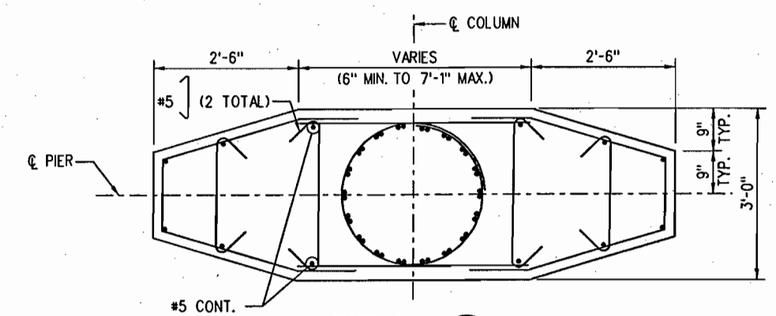

SECTION C

SCALE: 3/4"=1'-0"

(DIMENSIONS SIMILAR TO "SECTION B", EXCEPT AS NOTED)

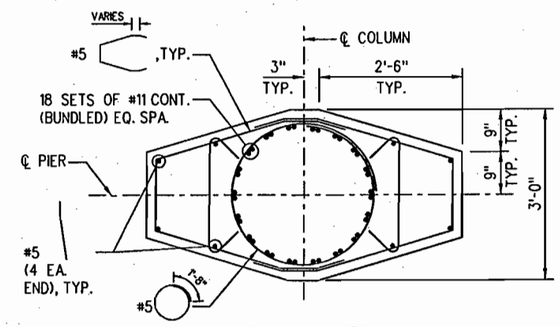

SECTION D

SCALE: 3/4"=1'-0"

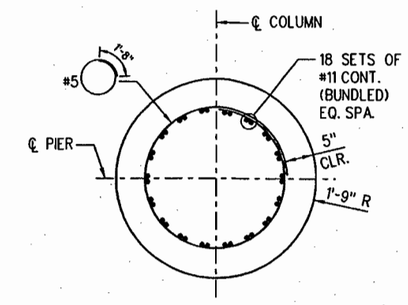

SECTION E

SCALE: 3/4"=1'-0"

LOCATION	QUEBEC WIDENING BRIDGE	PEDESTRIAN BRIDGE
DIMENSION "A"	48'-9 1/8"	70'-7 7/8"
DIMENSION "B"	45'-9 1/4"	67'-8"
ELEVATION "C"	5779.78'	5782.03'

NOTES

1. FOR TOP OF CAISSON ELEVATIONS, SEE DWG. NO. B9.
2. FOR PIER DIAPHRAGM, SEE DWG. NO. B18.

PRELIMINARY
SUBJECT TO REVISION

Design	INITIAL	DATE
Designed By	SA	2/06
Checked By		

Detail	INITIAL	DATE
Detailed By	ERS	2/06
Checked By		

Quantities	INITIAL	DATE
Quantities By		
Checked By		

Revision Dates (Preliminary Stage Only)

S:\Tranproj\246177-00\HwyDes\Plans\brpd01.dgn 1:22:45 PM 5/30/2006

Computer File Information		
Creation Date: 02/27/06	Initials: ERS	
Last Modification Date: 04/10/06	Initials: ERS	
Full Path: S:\Tranproj\ 246177-00\HwyDes\Plans\		
Drawing File Name: brpd01.dgn		
CAD Ver. MicroStation J	Scale: 1"= 4'-0"	Units: ENGLISH

Sheet Revisions

DOUGLAS COUNTY
Department of Public Works
100 Third Street
Castle Rock, CO 80104
Phone: (303) 660-7490
FAX: (303) 688-9343

PBSJ
4601 DTC Blvd.
Suite 700
Denver, CO 80237
Phone: 303/221-7275
Fax: 303/221-7276

As Constructed
No Revisions:
Revised:
Void:

QUEBEC OVER C470
PIER 2

Designer:	S. Abraham	Structure Numbers	F-17-HJ
Detailer:	E. Schawo		F-17-QT
Sheet Subset:	BRIDGE	Subset Sheets:	B17 of

Project No./Code
C.I. 03-013

Sheet Number 50

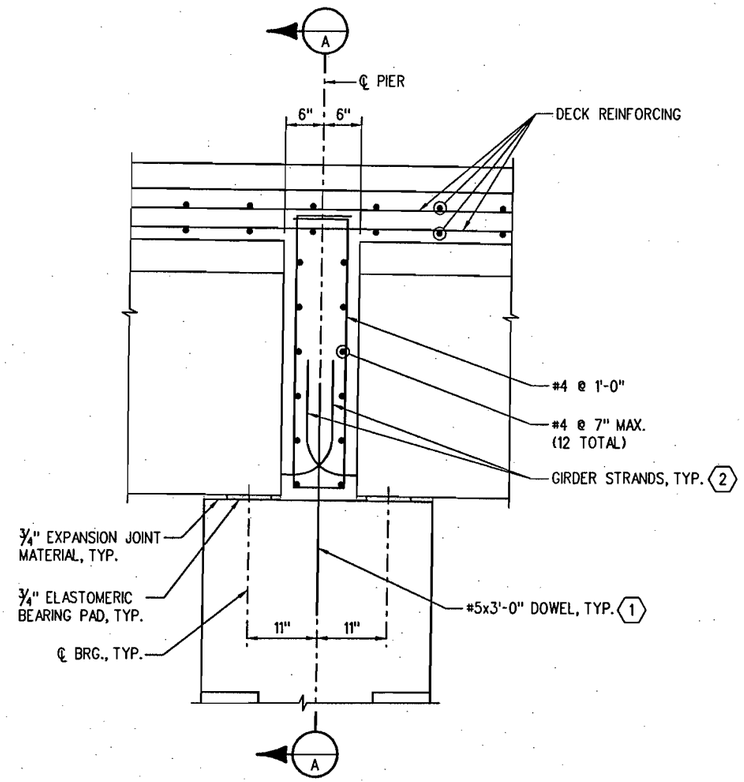

PIER DIAPHRAGM DETAILS

SCALE: ½"=1'-0"

(QUEBEC WIDENING DIAPHRAGM SHOWN, PEDESTRIAN BRIDGE DIAPHRAGM SIMILAR)

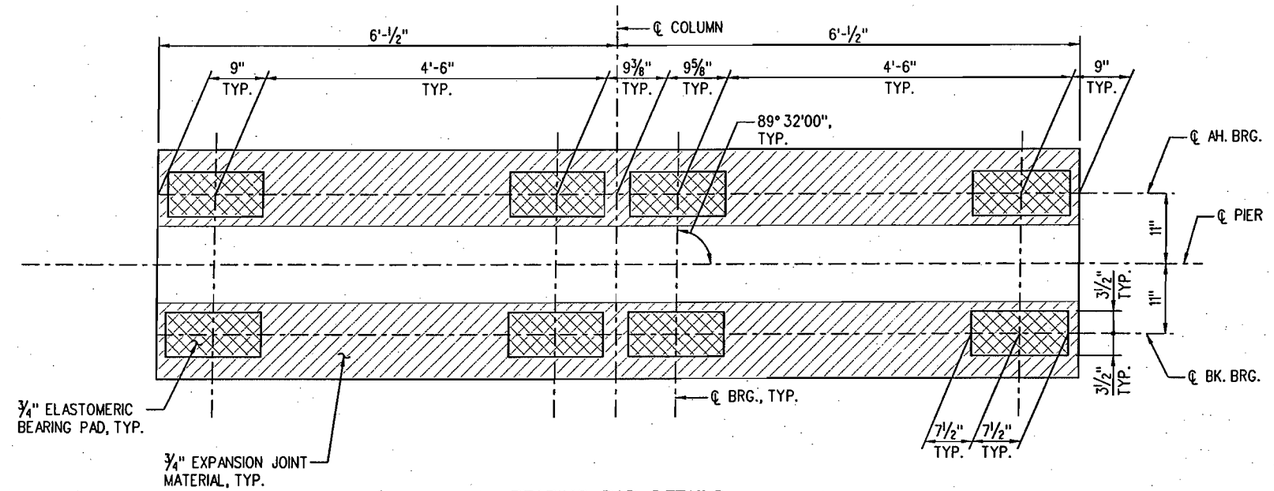

BEARING PAD DETAILS

SCALE: ½"=1'-0"

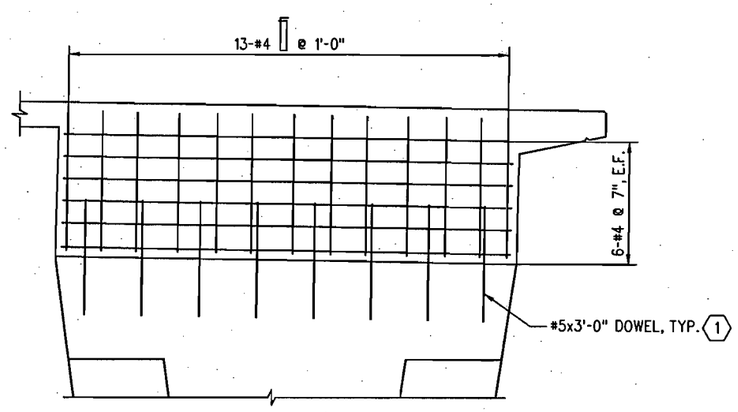

SECTION A

SCALE: 1/4"=1'-0"

KEY NOTES

1. FOR PIER REINFORCING, SEE DWG. NO. B17.
2. FOR GIRDER DETAILS, SEE DWG. NO. B20.

NOTES

1. PIER DIAPHRAGM SHALL BE CONCRETE CLASS D (BRIDGE)
2. DECK AND PIER DIAPHRAGM SHALL BE PLACE MONLITHICALLY.

PRELIMINARY
SUBJECT TO REVISION

Design	INITIAL	DATE
Designed By	SA	02/06
Checked By		

Detail	INITIAL	DATE
Detailed By	ERS	02/06
Checked By		

Quantities	INITIAL	DATE
Quantities By		
Checked By		

Revision Dates (Preliminary Stage Only)

12:50:30 PM s:\tranproj\246177-00\hwydes\plans\brpd02.dgn

5/30/2006

Computer File Information	
Creation Date: 02/27/06	Initials: ERS
Last Modification Date: 04/10/06	Initials: ERS
Full Path: S:\Tranproj\ 246177-00\HwyDes\Plans\	
Drawing File Name: brpd02.dgn	
CAD Ver. MicroStation V8 Scale: AS SHOWN	Units: ENGLISH

Sheet Revisions

DOUGLAS COUNTY
Department of Public Works
100 Third Street
Castle Rock, CO 80104
Phone: (303) 660-7490
FAX: (303) 688-9343

PBSJ
4601 DTC Blvd.
Suite 700
Denver, CO 80237
Phone: 303/221-7275
Fax: 303/221-7276

As Constructed
No Revisions:
Revised:
Void:

QUEBEC OVER C470
PIER DIAPHRAGM DETAILS

Designer:	S. Abraham	Structure Numbers	F-17-HJ
Detailer:	E. Schawo		F-17-QT
Sheet Subset:	BRIDGE	Subset Sheets:	B18 of 41

Project No./Code
C.I. 03-013

Sheet Number 51

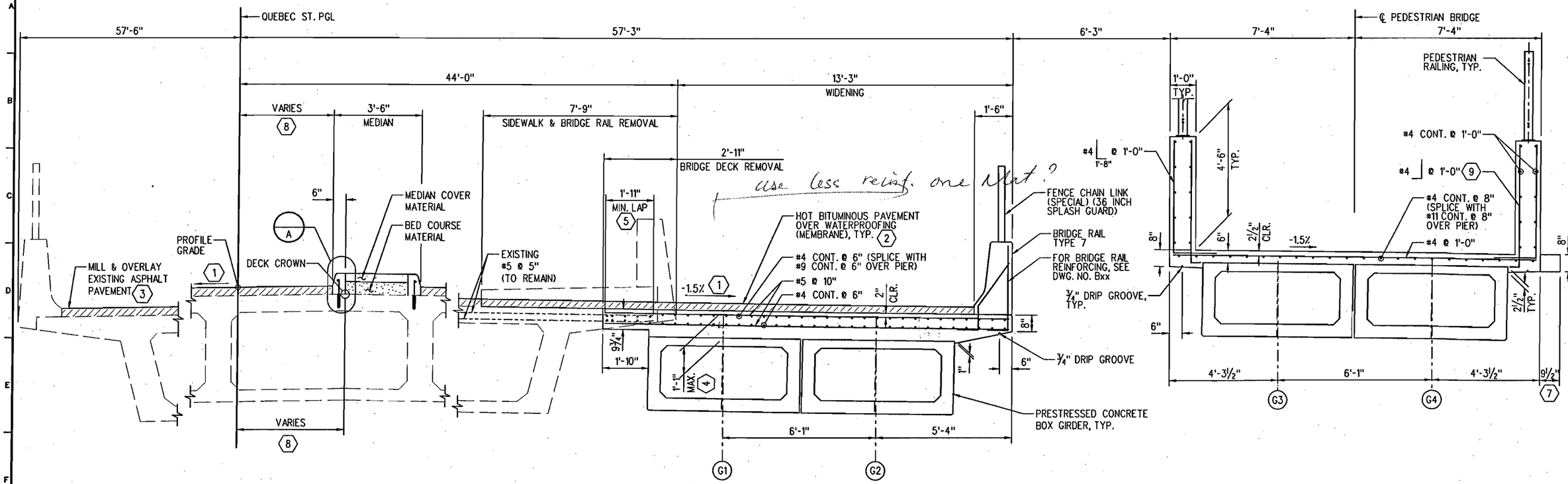

TYPICAL SECTION

(LOOKING AHEAD STATION)

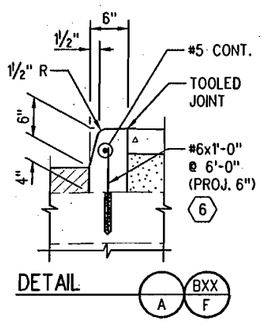

KEY NOTES

1. TOP OF CONCRETE DECK WIDENING SHALL MATCH THE CROSS SLOPE OF THE EXISTING CONCRETE DECK - APPROXIMATELY 0.015'/FT. NEW PAVEMENT SHALL BE PLACED TO PROVIDE 0.015'/FT. CROSS SLOPE.
2. DEPTH OF PAVEMENT VARIES. 3 INCHES MINIMUM AT FLOWLINE.
3. EXISTING ASPHALT SHALL BE MILLED AND OVERLAYED TO PROVIDE 0.015'/FT. CROSS SLOPE.
4. DECK THICKNESS VARIES DUE TO GIRDER CAMBER. 9" MINIMUM AT MIDSPAN, 1'-1" MAXIMUM AT ℄ BEARINGS.
5. CONTRACTOR MAY REPLACE WITH MECHANICAL SPLICE.
6. FIELD DRILL 1½"øx6" HOLE IN CONCRETE DECK. INSTALL DOWEL USING APPROVED EPOXY GROUT.
7. LEDGE FOR PRECAST PANELS LOCATED AT PIER ONLY. FOR ADDITIONAL INFORMATION, SEE DWG. NO. B27.
8. LOCATION AND DISTANCE VARIES. FOR ADDITIONAL INFORMATION, SEE DWG. NOS. B7 & B8.
9. ROTATE LEG TO CLEAR GIRDER.

NOTES

1. DECK SHALL BE CONCRETE CLASS D (BRIDGE).
2. FOR DECK PLAN, SEE DWG. NO. B21.
3. FOR PRESTRESSED CONCRETE BOX DETAILS, SEE DWG. NO. B20.
4. FOR BRIDGE RAIL TYPE 7 DETAILS, SEE DWG. NO. B22.
5. FOR FENCE CHAIN LINK (SPECIAL) (36 INCH SPLASH GUARD) DETAILS, SEE DWG. NO. B23.
6. FOR PEDESTRIAN RAILING DETAILS, SEE DWG. NO. B24.

PRELIMINARY
SUBJECT TO REVISION

Design	INITIAL	DATE
Designed By	SA	8/05
Checked By		

Detail	INITIAL	DATE
Detailed By	ERS	2/06
Checked By		

Quantities	INITIAL	DATE
Quantities By		
Checked By		

Revision Dates (Preliminary Stage Only)

s:\tranproj\246177-00\hwydes\plans\brsu01.dgn
12:50:41 PM
5/30/2006

Computer File Information	
Creation Date: 02/20/06	Initials: ERS
Last Modification Date: 03/17/06	Initials: ERS
FullPath: S:\Tranproj\ 246177-00\HwyDes\Plans\	
Drawing File Name: brsu01.dgn	
CAD Ver. MicroStation V8 Scale: 1/4"=1'-0"	Units: ENGLISH

Sheet Revisions

DOUGLAS COUNTY
Department of Public Works
100 Third Street
Castle Rock, CO 80104
Phone: (303) 660-7490
FAX: (303) 688-9343

PBSJ
4601 DTC Blvd.
Suite 700
Denver, CO 80237
Phone: 303/221-7275
Fax: 303/221-7276

As Constructed
No Revisions:
Revised:
Void:

QUEBEC OVER C470
SUPERSTRUCTURE DETAILS

Designer:	S. Abraham	Structure Numbers	F-17-HJ
Detailer:	E. Schawo		F-17-QT
Sheet Subset:	BRIDGE	Subset Sheets:	B19 of 41

Project No./Code
C.I. 03-013

Sheet Number 52

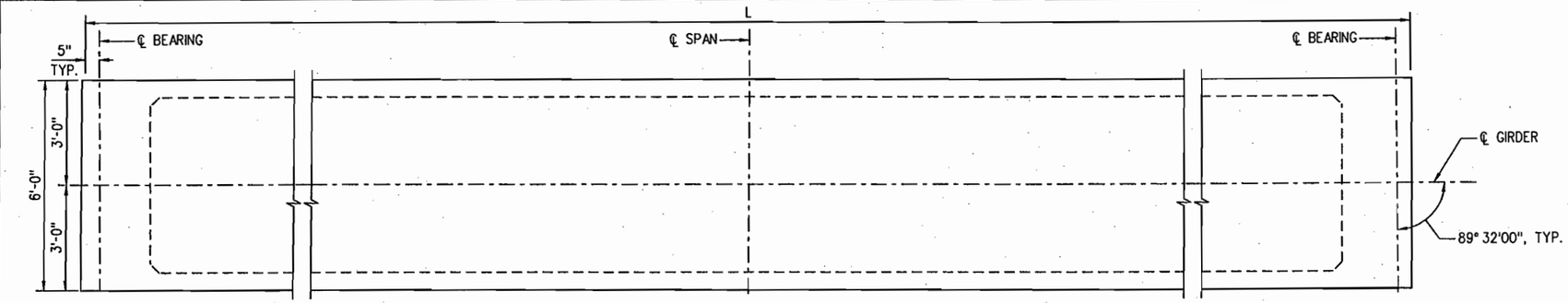

PLAN

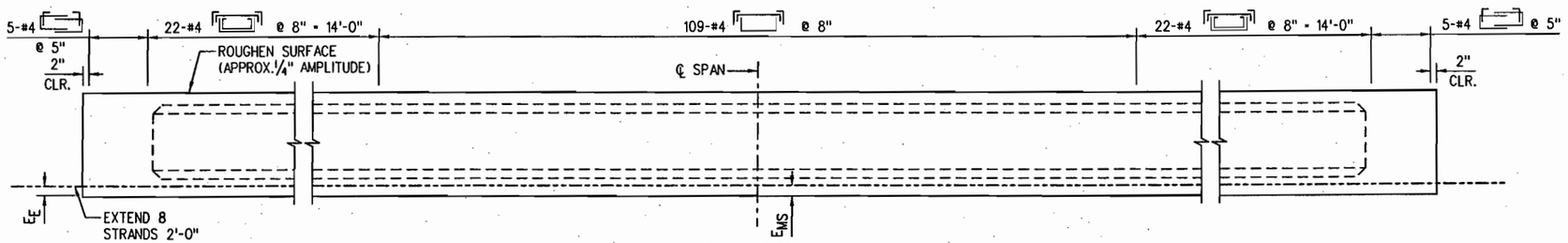

ELEVATION

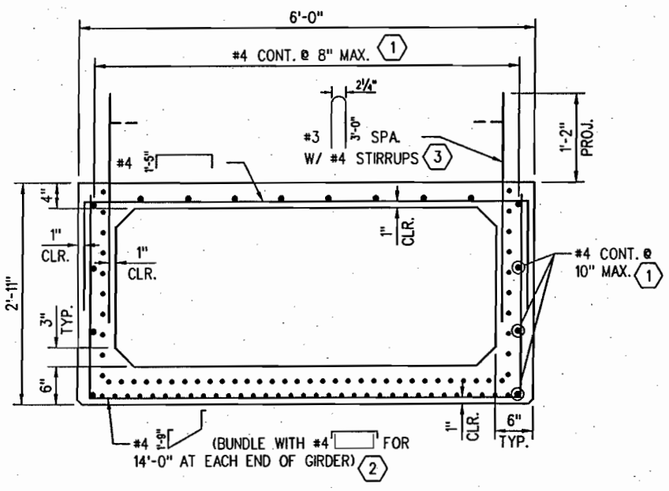

TYPICAL SECTION

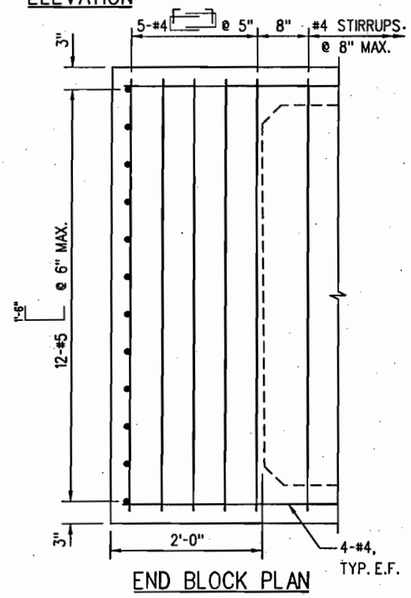

END BLOCK PLAN

NOTES

1. ALL WORK NECESSARY TO FABRICATE AND INSTALL THE INTEGRAL PARTS OF THE GIRDER (INCLUDING THE INTERNAL DIAPHRAGMS, IF ANY, AND LEVELING PADS), AS SHOWN ON THE PLANS, SHALL BE INCLUDED IN THE BID PRICE FOR ITEM NO. 618, PRESTRESSED CONCRETE BOX WITH A PAY UNIT OF LINEAR FOOT MEASURED BY THE DIMENSION L.
2. WHEN APPROVED BY THE ENGINEER, A MINIMUM OF TACK WELDING WILL BE PERMITTED ON ASTM A706 UNCOATED REINFORCING STEEL.
3. REINFORCING PROJECTING FROM THE TOP OF THE GIRDER AND REINFORCING WITHIN EIGHT FEET OF AN EXPANSION DEVICE IN THE BRIDGE DECK SHALL BE EPOXY COATED. DAMAGED COATING ON GIRDER REINFORCING NEED NOT BE REPAIRED. THE MINIMUM COVER FOR REINFORCING STEEL IS 1".
4. CUT STRANDS TO PROJECT 3", EXCEPT AS SHOWN. DO NOT MAKE COSMETIC REPAIRS (DAMAGE LESS THAN 1½" DEEP) TO THE PARTS OF THE GIRDERS EMBEDDED IN CONCRETE.
5. USE LOW RELAXATION STRANDS MEETING THE REQUIREMENTS OF ASTM A-416 GRADE 270. THE MINIMUM CLEAR DISTANCE BETWEEN GROUPS OR INDIVIDUAL STRANDS SHALL BE $2.3(d_s)$ BUT NOT LESS THAN 1¼". THE MINIMUM COVER FOR PRESTRESSING STEEL IS 1½".
6. CONCRETE SHALL BE CLASS PS.
7. ENTRAINED AIR IS NOT REQUIRED FOR GIRDER CONCRETE.
8. END BLOCKS SHALL BE USED ON ALL GIRDERS UNLESS OTHERWISE NOTED.
9. USE ½" CHAMFER ON ALL CORNERS, EXCEPT AS NOTED.
10. PREDICTED CAMBER IS THE CAMBER FOR THE GIRDER ALONE AT 90 DAYS. THE CONTRACTOR SHALL LIMIT THE CAMBER TO A VALUE NOT TO EXCEED THE PREDICTED CAMBER PLUS 1" PRIOR TO THE DECK POUR BY WEIGHTING, SCHEDULING FABRICATION, CHANGING STORAGE SUPPORT POINTS, OR OTHER MEANS AND MUST REPORT TO THE ENGINEER VALUES OF CAMBER WHICH EXCEED THE PREDICTED CAMBER PLUS THIS TOLERANCE. REMEDIAL MEASURES, AS APPROVED BY THE ENGINEER, SHALL BE TAKEN IF THE PREDICTED CAMBER PLUS THE ALLOWED TOLERANCE IS EXCEEDED. THE APPROVED REMEDIAL MEASURES SHALL BE FREE OF ANY ADVERSE IMPACT. THE COSTS ASSOCIATED WITH ALL REMEDIAL MEASURES SHALL BE BORNE BY THE CONTRACTOR.
11. SIDE BY SIDE BOXES PLACED OVER ROADS OR PEDESTRIAN FACILITIES SHALL NOT HAVE CAMBERS OF ADJACENT BOXES DIFFER BY MORE THAN 1" BEFORE THE DECK POUR. PRIOR TO PLACING DECK REINFORCING, THE CONTRACTOR SHALL ADJUST THIS DIFFERENTIAL WITHIN THE LIMIT BY SORTING THE BOXES TO MINIMIZE DIFFERENTIALS, OR BY PULLING THE HIGH BOXES DOWN AND LOW BOXES UP.
12. THE CONTRACTOR IS RESPONSIBLE FOR DETERMINING NECESSARY BRACING REQUIREMENTS, AND FOR PROVIDING ADEQUATE BRACING FOR THE SPECIFIC WIND AND WEATHER CONDITIONS TO BE ENCOUNTERED FOR EACH SPECIFIC PROJECT.
13. PRODUCT DIMENSIONAL TOLERANCES SPECIFIED IN MNL-116, SECTION 6.4 SHALL APPLY AS SPECIFICATION TOLERANCE, EXCEPT THAT THE DEPTH (D) TOLERANCE SHALL BE +½", -¼".
14. WHEN DEBONDING IS USED, IT SHALL EXTEND IN UNIFORMLY VARYING LENGTHS TO A DISTANCE NOT CLOSER THAN 17 FT. TO THE CENTER OF THE SPAN.

KEY NOTES

1. LIGHTLY TENSIONED STRANDS MAY BE USED AS AN ALTERNATE.
2. HOOK ORIENTATION IS AT THE CONTRACTOR'S OPTION.
3. FIELD BEND OVER TOP MAT OF LONGITUDINAL SLAB STEEL.

LEGEND

- A_s - MINIMUM AREA OF THE PRESTRESSING STEEL.
- d_s - NOMINAL STRAND DIAMETER.
- f'_s - ULTIMATE STRENGTH OF THE PRESTRESSING STEEL.
- F_j - JACKING FORCE PER GIRDER.
- F_f - FINAL FORCE PER GIRDER AFTER ALL LOSSES.
- f'_{ci} - REQUIRED CONCRETE STRENGTH AT RELEASE OF PRESTRESS FORCE.
- f'_c - REQUIRED CONCRETE STRENGTH AT 28 DAYS OF AGE.
- L - LENGTH OF GIRDER ALONG THE GRADE OF THE GIRDER.
- Δ - DEFLECTION AT CENTERLINE OF SPAN DUE TO CAST-IN-PLACE SLAB, DIAPHRAGMS, ASPHALT, BARRIERS, AND RAILS.

GIRDER SCHEDULE

BRIDGE	SPAN NO.	GIRDER NO.	L (FEET)	A_s (IN²)	DEBOND STRANDS (PERCENT)	E_E (IN)	E_{MS} (IN)	F_j (KIPS)	F_f (KIPS)	f'_{ci} (PSI)	f'_c (PSI)	Δ (IN)	PREDICTED CAMBER (IN)
QUEBEC ST.	1-2	G1	104.500	13.888	23.53	3.19	3.19	202.5	157.6	6.5	8.5	2.94	6.06
WIDENING	1-2	G2	104.500	13.888	23.53	3.19	3.19	202.5	156.2	6.5	8.5	2.43	6.06
PEDESTRIAN	1-2	G3 & G4	104.500	8.68	0	3.25	3.25	202.5	175.7	6.5	8.5	2.4	2.47

PRELIMINARY
SUBJECT TO REVISION

Computer File Information	
Creation Date: 02/22/06	Initials: ERS
Last Modification Date: 04/11/06	Initials: ERS
Full Path: S:\Tranproj\ 246177-00\HwyDes\Plans\	
Drawing File Name: brgd01.dgn	
CAD Ver. MicroStation V8 Scale: NONE	Units: ENGLISH

Sheet Revisions

DOUGLAS COUNTY
Department of Public Works
100 Third Street
Castle Rock, CO 80104
Phone: (303) 660-7490
FAX: (303) 688-9343

PBSJ
4601 DTC Blvd.
Suite 700
Denver, CO 80237
Phone: 303/221-7275
Fax: 303/221-7276

As Constructed
No Revisions:
Revised:
Void:

QUEBEC OVER C470
PRESTRESSED CONCRETE BOX

Designer:	S. Abraham	Structure Numbers	F-17-HJ
Detailer:	E. Schowo		F-17-QT
Sheet Subset:	BRIDGE	Subset Sheets: B20 of 41	

Project No./Code
C.I. 03-013

Sheet Number 53

Revision Dates (Preliminary Stage Only)

Design			Detail			Quantities		
	INITIAL	DATE		INITIAL	DATE		INITIAL	DATE
Designed By	SA	08/05	Detailed By	ERS	02/06	Quantities By		
Checked By			Checked By			Checked By		

S:\Tranproj\246177-00\hwydes\plans\brgd01.dgn
12:50:35 PM
5/30/2006

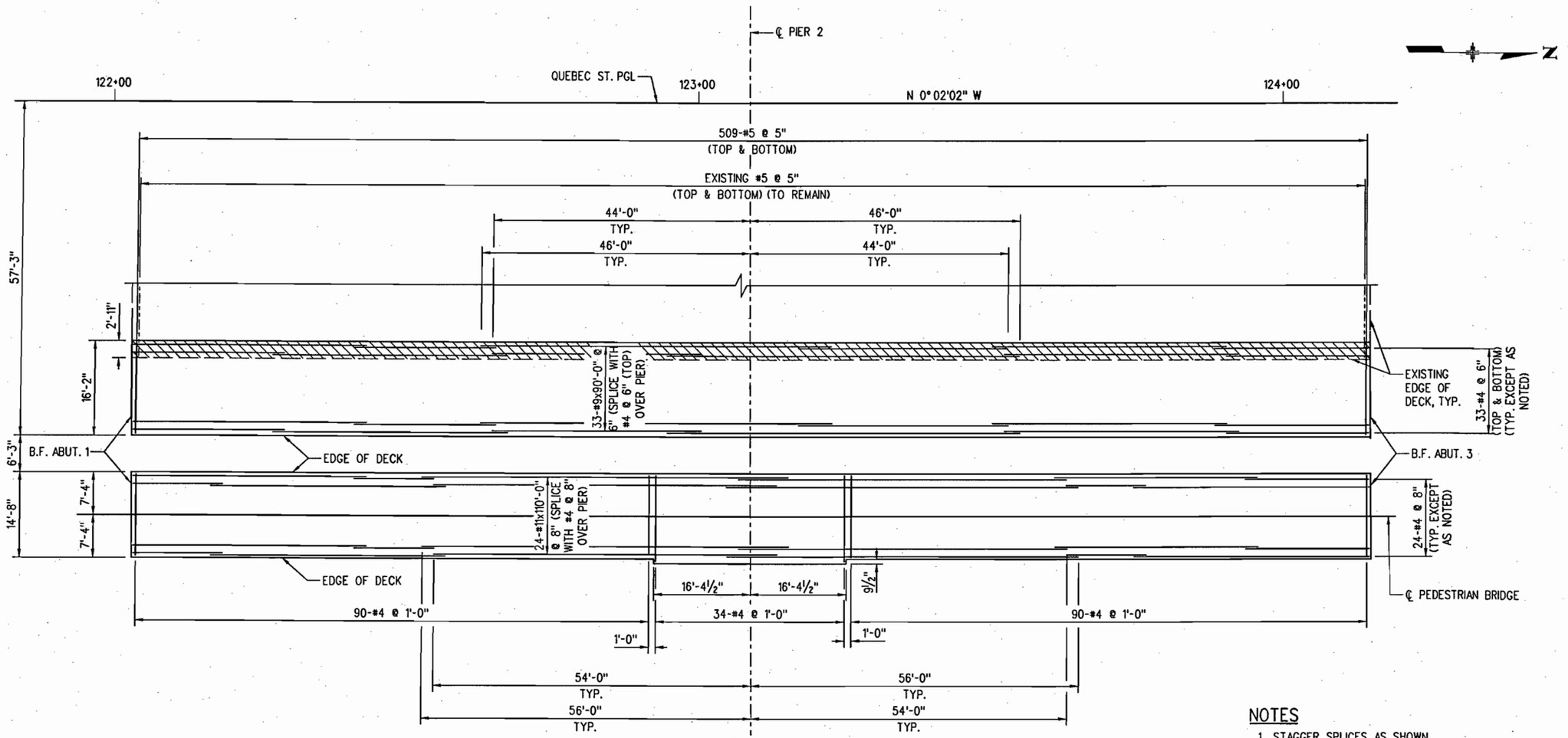

PLAN

(BRIDGE RAIL NOT SHOWN)

NOTES

1. STAGGER SPLICES AS SHOWN.
2. THE MINIMUM LAP LENGTH FOR #11 BARS IS 8'-6".
3. THE MINIMUM LAP LENGTH FOR #9 BARS IS 5'-8".
4. THE MINIMUM LAP LENGTH FOR #4 BARS IS 2'-0".

LEGEND

BRIDGE REMOVAL PORTION

PRELIMINARY
SUBJECT TO REVISION

Design			
Designed By	SA	8/05	Detailed By
Checked By			Checked By

Detail			
Detailed By	ERS	2/06	Quantities By
Checked By			Checked By

Quantities		
Quantities By	INITIAL	DATE
Checked By		

Revision Dates (Preliminary Stage Only)

s:\tranproj\246177-00\hwydes\plans\brsu02.dgn
12:50:47 PM
5/30/2006

Computer File Information	
Creation Date: 02/16/06	Initials: ERS
Last Modification Date: 03/17/06	Initials: ERS
Full Path: S:\Tranproj\ 246177-00\HwyDes\Plans\	
Drawing File Name: brsu02.dgn	
CAD Ver. MicroStation V8 Scale: 1"=20'-0"	Units: ENGLISH

Sheet Revisions

DOUGLAS COUNTY
Department of Public Works
100 Third Street
Castle Rock, CO 80104
Phone: (303) 660-7490
FAX: (303) 688-9343

PBSJ
4601 DTC Blvd.
Suite 700
Denver, CO 80237
Phone: 303/221-7275
Fax: 303/221-7276

As Constructed
No Revisions:
Revised:
Void:

QUEBEC OVER C470
DECK REINFORCING PLAN

Designer:	S. Abraham	Structure Numbers	F-17-HJ
Detailer:	E. Schawo		F-17-QT
Sheet Subset:	BRIDGE	Subset Sheets: B21 of 41	

Project No./Code
C.I. 03-013

Sheet Number 54

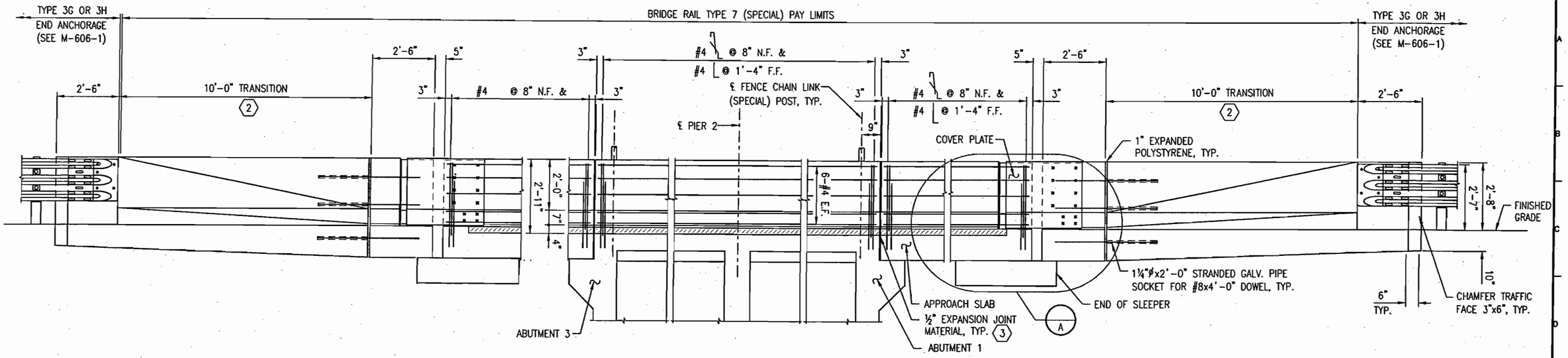

ELEVATION

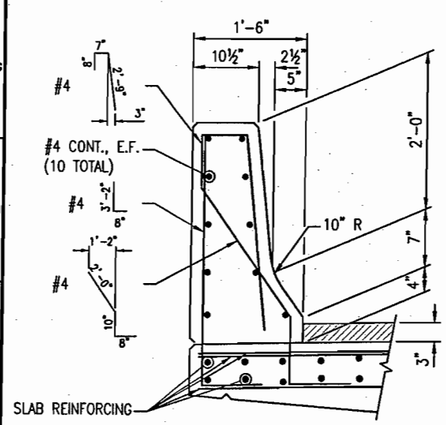

TYPICAL SECTION

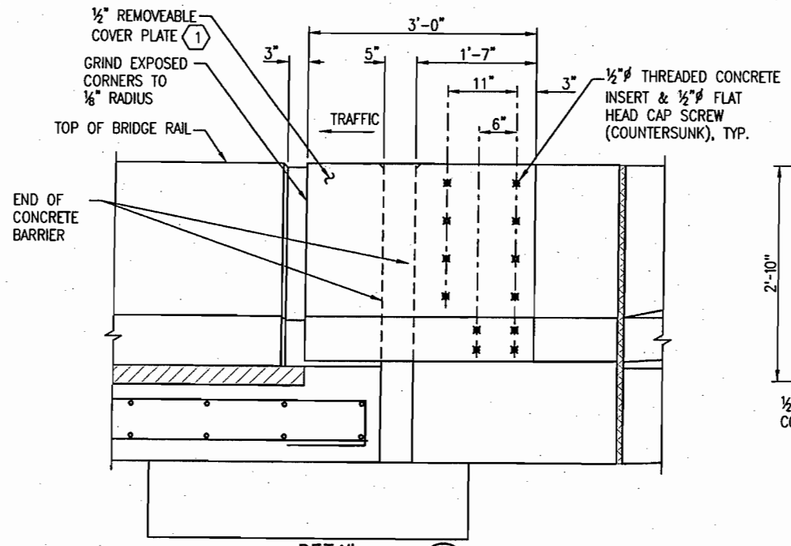

DETAIL A

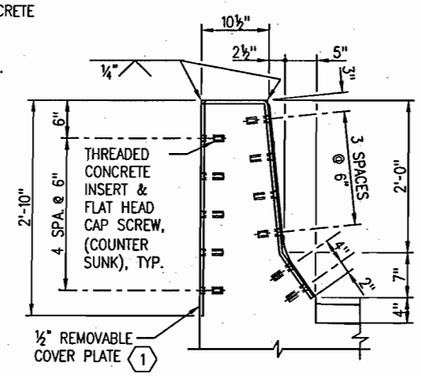

COVER PLATE SECTION

NOTES

1. BRIDGE RAIL REINFORCING AT ENDS SHALL BE AS SHOWN AT ½" EXPANSION JOINT END OF BRIDGE RAIL.
2. BACKFILL ABUTMENT AND WINGWALLS BEFORE BARRIER IS PLACED.
3. ALL BRIDGE RAIL CONCRETE SHALL BE CLASS D (BRIDGE).
4. LONGITUDINAL REINFORCEMENT SHALL STOP AT ALL EXPANSION JOINTS.
5. BRIDGE RAIL SHALL BE CONSTRUCTED PLUMB.
6. CONCRETE AND REINFORCING STEEL SHALL CONFORM TO THE REQUIREMENTS OF SECTIONS 601 AND 602.
7. THE SURFACE OF THE RAIL SHALL BE TESTED WITH A 10 FOOT STRAIGHTEDGE LAID ALONG THE SURFACE IN THE LONGITUDINAL DIRECTION. DEVIATION OF THE CONCRETE SURFACE FROM THE STRAIGHTEDGE SHALL BE LESS THAN ¼" PLUS ALLOWANCE FOR ROADWAY HORIZONTAL AND VERTICAL CURVATURE.
8. PAYMENT WILL BE MADE UNDER ITEM 606 BRIDGE RAIL TYPE 7 (SPECIAL) FOR ALL CONCRETE CLASS D (BRIDGE), REINFORCING STEEL (INCLUDING BARS PROJECTING INTO RAIL), COVER PLATES, AND EXPANDED POLYSTYRENE.

KEYNOTES

1. OPEN JOINT IN RAIL TO MATCH LOCATION AND WIDTH OF EXPANSION JOINT.
2. FOR GUARDRAIL TRANSITION REINFORCEMENT INFORMATION, SEE STANDARD PLAN NO. M-606-13.
3. SEAL TRAFFIC FACE OF ½" EXPANSION JOINT WITH POLYSULFIDE OR SILICONE SEALANT.
4. FOR BRIDGE RAIL TRANSITION DETAILS SEE STANDARD PLAN NO. M-606-1.

INFORMATION ONLY

DESCRIPTION	UNIT	PER LIN. FT.
CONCRETE CLASS D (BRIDGE)	CU. YD.	0.12
REINFORCING STEEL (EPOXY COATED)	LB.	16.2

PRELIMINARY
SUBJECT TO REVISION

Computer File Information	
Creation Date: 02/17/06	Initials: ERS
Last Modification Date: 02/17/06	Initials: ERS
Full Path: S:\Tranproj\ 246177-00\HwyDes\Plans\	
Drawing File Name: brbr01.dgn	
CAD Ver. MicroStation V8 Scale: NONE	Units: ENGLISH

Sheet Revisions

DOUGLAS COUNTY
Department of Public Works
100 Third Street
Castle Rock, CO 80104
Phone: (303) 660-7490
FAX: (303) 688-9343

PBSJ
4601 DTC Blvd.
Suite 700
Denver, CO 80237
Phone: 303/221-7275
Fax: 303/221-7276

As Constructed
No Revisions:
Revised:
Void:

QUEBEC OVER C470
BRIDGE RAIL TYPE 7

Designer:	S. Abraham	Structure Numbers	F-17-HJ
Detailer:	E. Schawo		F-17-QT
Sheet Subset:	BRIDGE	Subset Sheets: B22 of 41	

Project No./Code
C.I. 03-013

Sheet Number 55

Revision Dates (Preliminary Stage Only)

Design	INITIAL	DATE
Designed By	SA	8/05
Checked By		

Detail	INITIAL	DATE
Detailed By	ERS	2/06
Checked By		

Quantities	INITIAL	DATE
Quantities By		
Checked By		

s:\tranproj\246177-00\hwydes\plans\brbr01.dgn
12:50:54 PM
5/30/2006

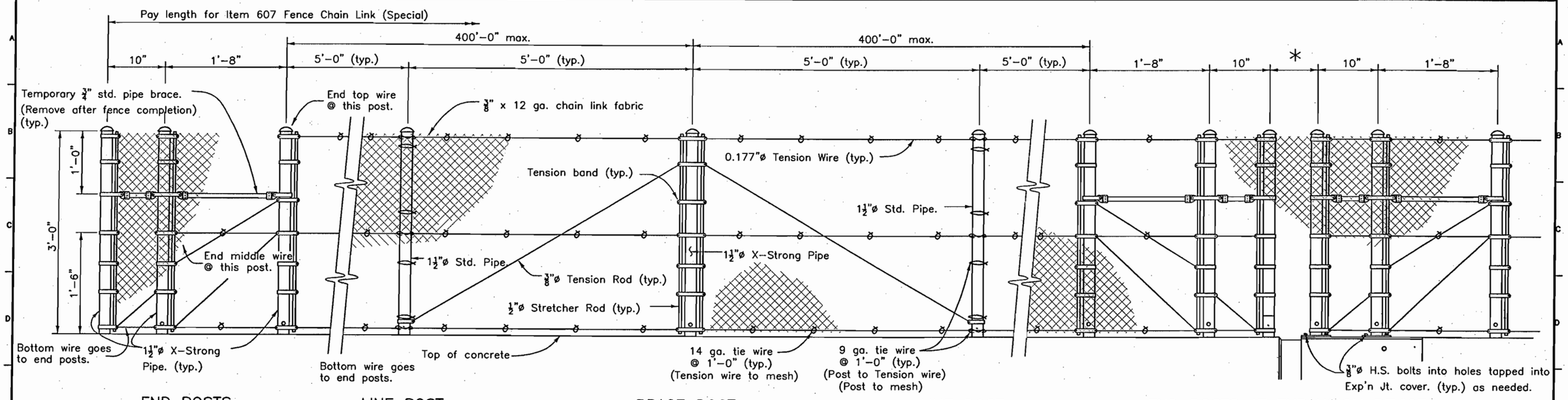

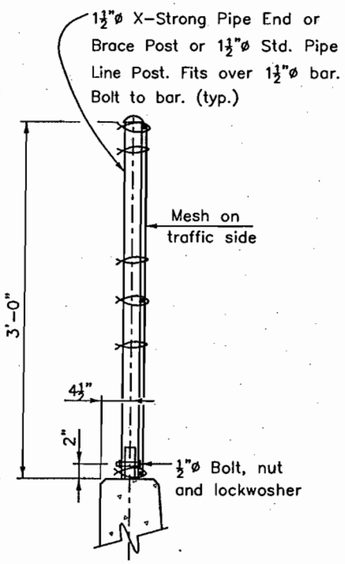

TYPICAL SECTION

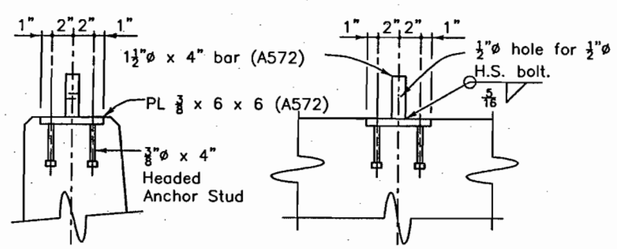

SECTION ELEVATION

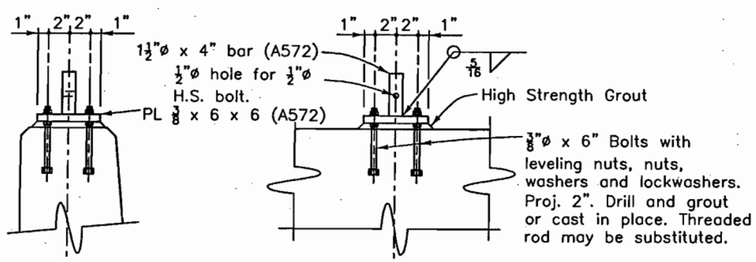

SECTION ELEVATION

ALTERNATE ANCHORAGE DETAILS

* Use ¼ of rated joint motion +6", 8" min. If not known, rated motion may be assumed to be 1¼" per 100' contributing to motion.

If * exceeds 10" run mesh over gap with enough slack for ½ rated expansion motion.

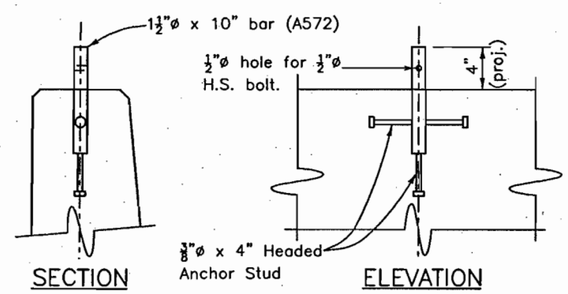

SECTION ELEVATION

ANCHORAGE DETAIL

NOTES

Anchorage assembly shall be galvanized after fabrication. If Vinyl Coating is specified, the fence assembly shall be Galvanized and Vinyl Coated after fabrication. Anchorages shall only be galvanized after fabrication.

Tension Rods and Wires shall have turnbuckles.

Post shall be vertical.

Pipe shall conform to ASTM A53 Type E or S, Grade B.

DESIGN DATA

Total Tension = 5400 lbs.

Test with: Max. Midbay deflection = 1¼" for Lateral Load of 160 lbs. on 1 ft², 1'-6" up @ center of bay.

Live Load: wind load = 32 psf or snow impact load = 96 plf @ 1'-6" up

Structural Steel: Pipe f_y = 35,000 psi

ASTM A572 (GR 50) f_y = 50,000 psi

Standard Color Vinyl Coatings over Galvanized Wire	Munsell Color System No. (as per ASTM)
Galvanized Only	None
Brown	7YR 2.4/1.75
Green	8.8G 2.63/5.8
Black	1.8PB 1.26/0.5

Special Color Vinyl Coatings over Galvanized Wire	☐ Federal Color No. ☐ Munsell Color System No.

If the specific color of coating is not marked and the Federal Color No. or the Munsell Color System No. is not given, vinyl coating is not required.

PRELIMINARY
SUBJECT TO REVISION

Revision Dates (Preliminary Stage Only)			

Quantities	INITIAL	DATE
By		
By		

Detail	INITIAL	DATE
Detailed By	ERS	2/06
Checked By		

Design	INITIAL	DATE
Designed By	SA	8/05
Checked By		

s:\tranproj\246177-00\hwydes\plans\brfe01.dgn
12:51:02 PM
5/30/2006

Computer File Information		
Creation Date: 02/17/06	Initials: ERS	
Last Modification Date: 02/17/06	Initials: ERS	
Full Path: S:\Tranproj\ 246177-00\HwyDes\Plans\		
Drawing File Name: brbr01.dgn		
CAD Ver. MicroStation J	Scale: NONE	Units: ENGLISH

Sheet Revisions

DOUGLAS COUNTY
Department of Public Works
100 Third Street
Castle Rock, CO 80104
Phone: (303) 660-7490
FAX: (303) 688-9343

PBSJ
4601 DTC Blvd.
Suite 700
Denver, CO 80237
Phone: 303/221-7275
Fax: 303/221-7276

As Constructed
No Revisions:
Revised:
Void:

QUEBEC/C470 BRIDGE WIDENING
FENCE CHAIN LINK (SPECIAL)
(36 INCH SPLASH GUARD)

Designer:	S. Abraham	Structure Numbers	F-17-HJ
Detailer:	E. Schawo		
Sheet Subset:	BRIDGE	Subset Sheets: B23 of	

Project No./Code
C.I. 03-013

Sheet Number 56

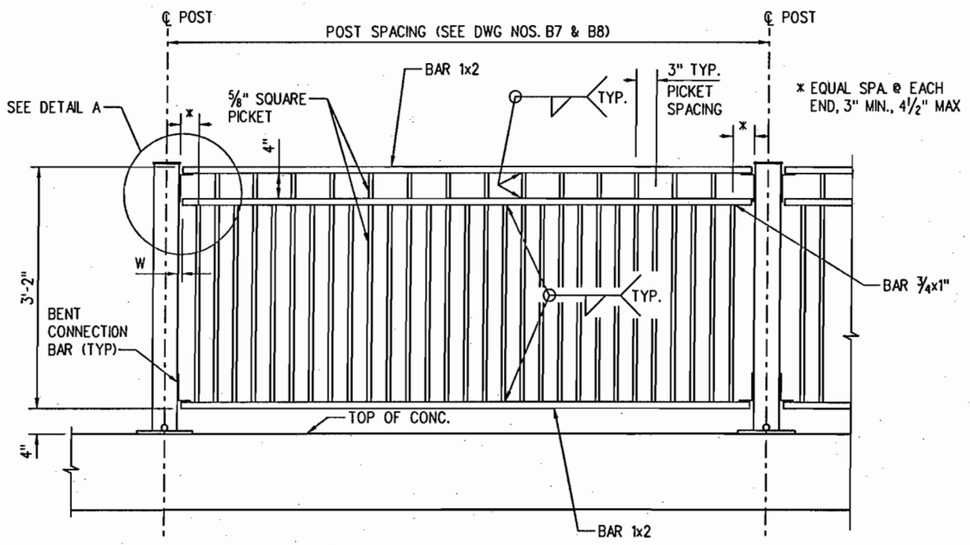

PARTIAL RAILING ELEVATION

END GAP DIMENSION	
PIECE	W
TOP RAIL	3/8"
MIDDLE HORIZ	5/8"
BOTTOM RAIL	3/8"

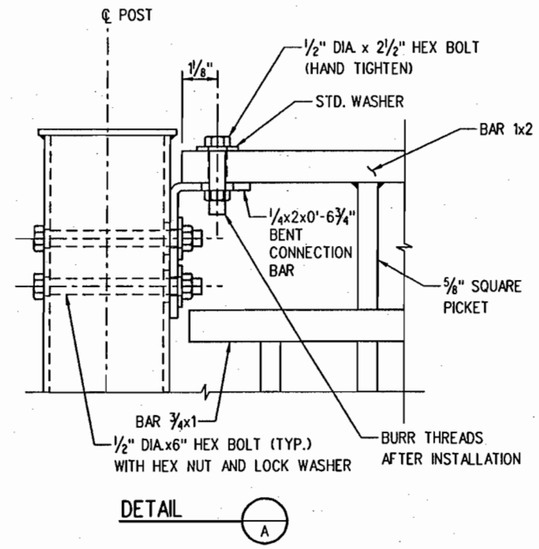

DETAIL A

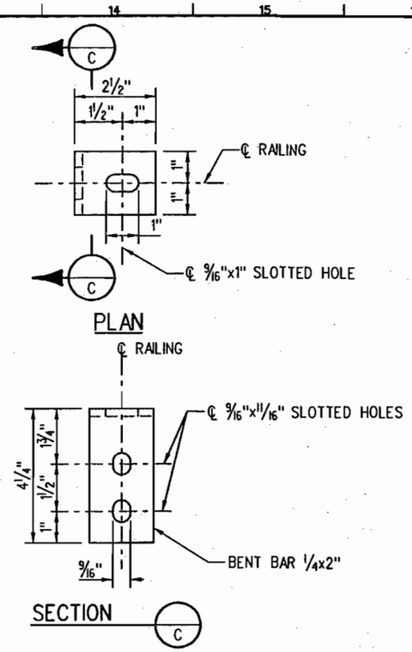

BENT CONNECTION BAR DETAIL

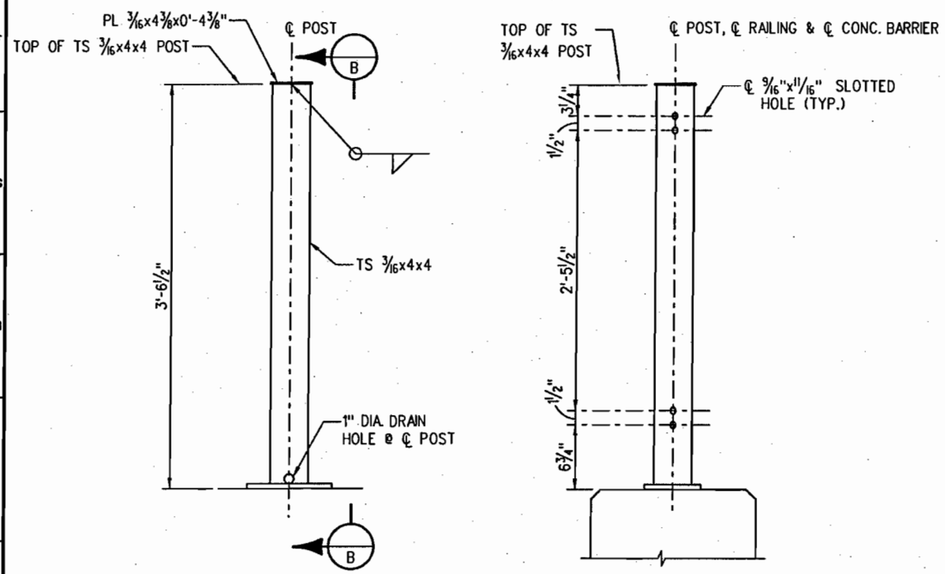

ELEVATION

VIEW B

POST DETAILS

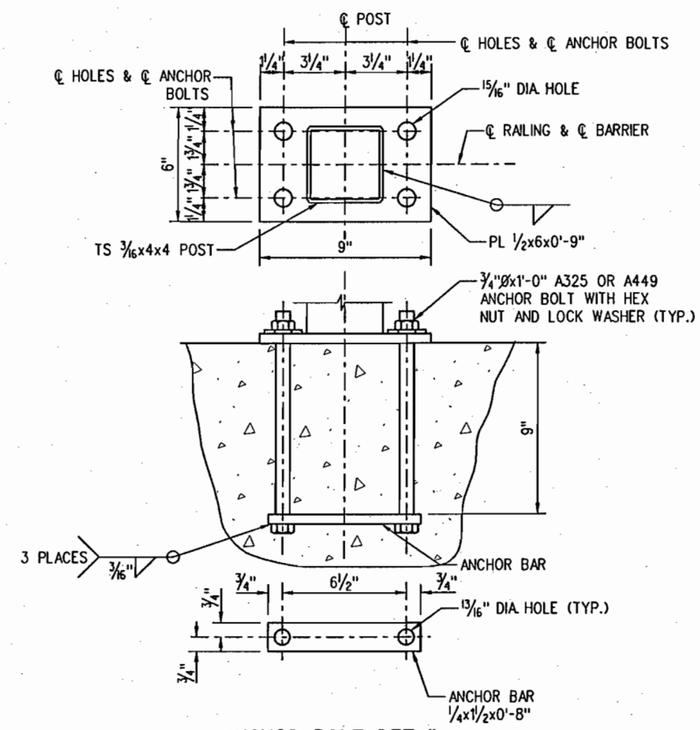

ANCHOR BOLT DETAIL

NOTES

1. ALL TUBES SHALL BE ASTM A-500 GRADE B.
   ALL POSTS AND BASE PLATES SHALL BE ASTM A-572 GRADE 50.
   ALL OTHER STEEL SHALL BE ASTM A-36 UNLESS OTHERWISE NOTED.
2. THE ABOVE MATERIAL AND ALL ANCHOR BOLTS AND MISCELLANEOUS BOLTS, NUTS, AND WASHERS SHALL BE GALVANIZED AFTER FABRICATION IN ACCORDANCE WITH SECTION 509. CONCRETE, REINFORCING STEEL, AND STRUCTURAL STEEL ELEMENTS SHALL CONFORM TO THE REQUIREMENTS OF SECTIONS 601, 602 AND 509, RESPECTIVELY.
3. POST ANCHOR, ENCASED IN CONCRETE, SHALL BE ASTM A-36 (AASHTO M-183) STEEL AND NEED NOT BE GALVANIZED.
4. ALL BOLTS THAT HAVE LOCK WASHERS SHALL BE TIGHTENED TO SNUG ONLY.
5. POSTS SHALL BE PERPENDICULAR TO THE LONGITUDINAL ROADWAY GRADE.
6. PAYMENT WILL BE MADE UNDER ITEM 606, BRIDGE RAIL TYPE 10M (SPECIAL) FOR ALL POSTS, POST ANCHORS, BASE PLATES, BACKING PLATES, ANCHOR BOLTS, MISCELLANEOUS BOLTS, NUTS, WASHERS, TUBES, TUBE EXPANSION DEVICES, TUBE SPLICES, END PLATES, CURB CONCRETE CLASS D (BRIDGE), AND CURB REINFORCING STEEL (INCLUDING BARS PROJECTING INTO CURB).
7. PRIOR TO FABRICATION OF THIS ITEM, THREE SETS OF WORKING DRAWINGS WHICH COMPLY WITH THE REQUIREMENTS OF SECTION 105, SHALL BE SUBMITTED TO THE ENGINEER FOR INFORMATION ONLY.
8. STRUCTURAL STEEL:
   AASHTO M-183 (ASTM A-36) fy = 36,000 PSI
   AASHTO M-223 (ASTM A-572) GRADE 50 fy = 50,000 PSI
   COLD FORMED ASTM A-500 GRADE B fy = 40,000 PSI

PRELIMINARY
SUBJECT TO REVISION

Design	INITIAL	DATE
Designed By	AGW	03/06
Checked By		

Detail	INITIAL	DATE
Detailed By	ERS	03/06
Checked By		

Quantities	INITIAL	DATE
Quantities By		
Checked By		

Revision Dates (Preliminary Stage Only)

s:\tranproj\246177-00\hwydes\plans\brbr02.dgn
12:51:07 PM
5/30/2006

Computer File Information		
Creation Date: 04/12/06	Initials: ERS	
Last Modification Date: 04/12/06	Initials: ERS	
Full Path: S:\Tranproj\ 246177-00\HwyDes\Plans\		
Drawing File Name: brbr02.dgn		
CAD Ver. MicroStation V8 Scale: NONE	Units: ENGLISH	

Sheet Revisions

DOUGLAS COUNTY
Department of Public Works
100 Third Street
Castle Rock, CO 80104
Phone: (303) 660-7490
FAX: (303) 688-9343

PBSJ
4601 DTC Blvd.
Suite 700
Denver, CO 80237
Phone: 303/221-7275
Fax: 303/221-7276

As Constructed
No Revisions:
Revised:
Void:

QUEBEC OVER C470
PEDESTRIAN RAILING

Designer:	A. Whitney	Structure Numbers	F-17-HJ
Detailer:	E. Schawo		F-17-QT
Sheet Subset:	BRIDGE	Subset Sheets: B24 of	

Project No./Code
C.I. 03-013

Sheet Number 57

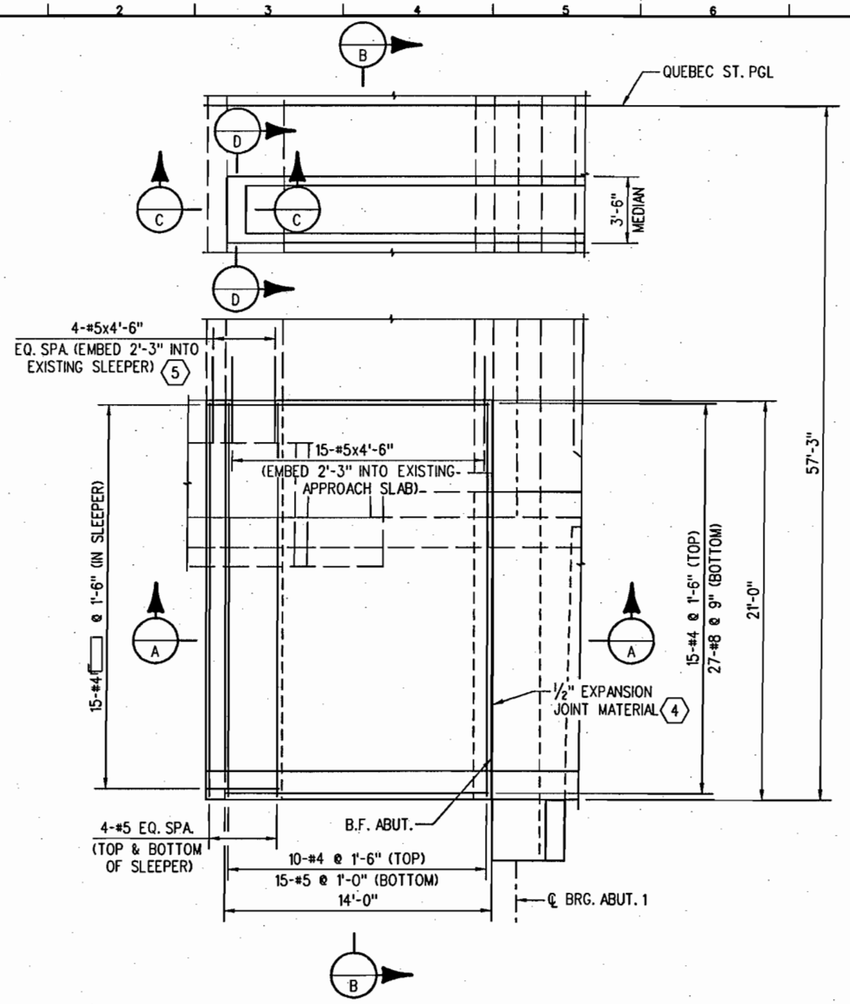

PLAN

(SOUTH APPROACH SLAB SHOWN, NORTH APPROACH SLAB SIMILAR BUT OPPOSITE HAND)
(BRIDGE RAIL REINFORCING AND MEDIAN COVER MATERIAL NOT SHOWN)

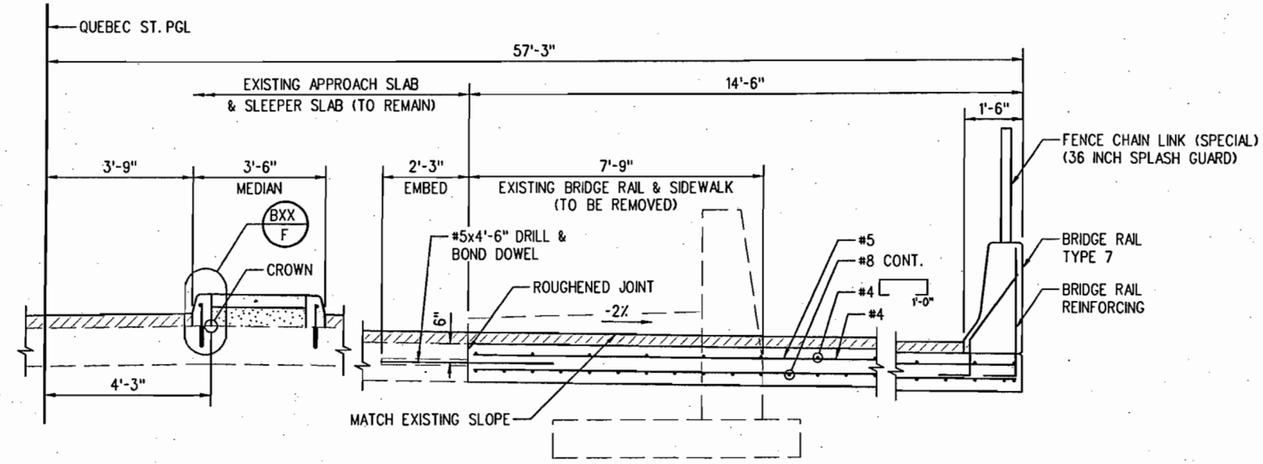

SECTION B

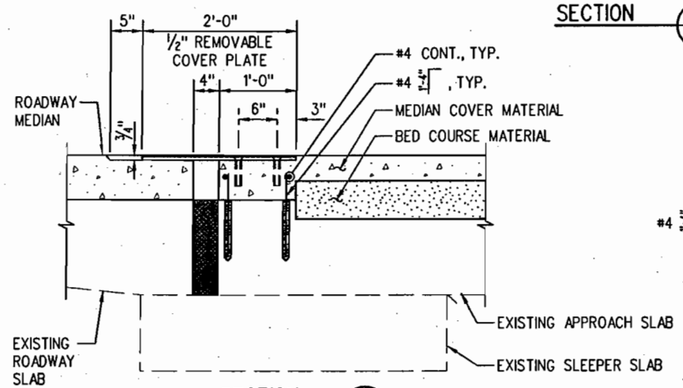

SECTION C

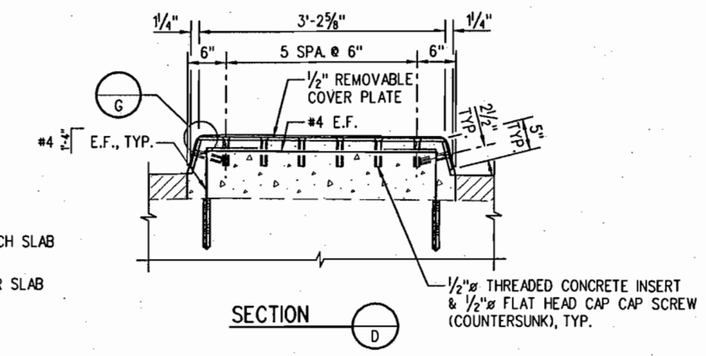

SECTION D

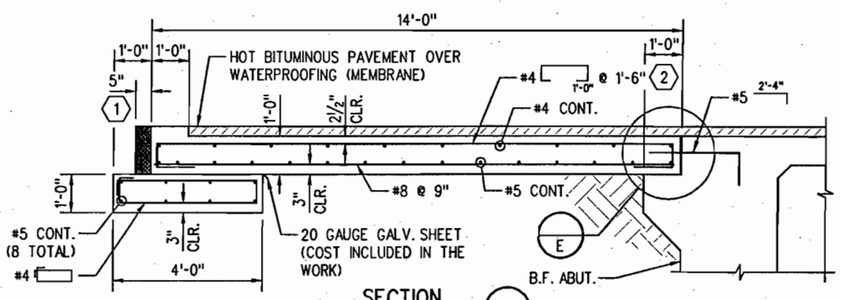

SECTION A

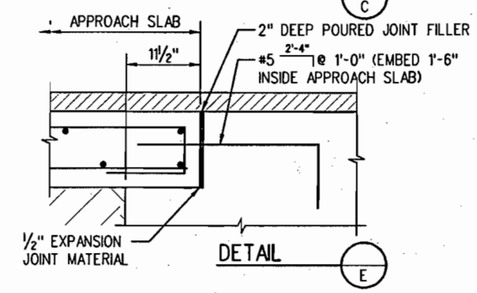

DETAIL E

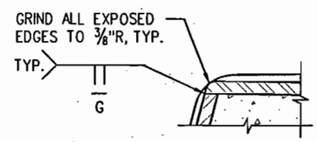

DETAIL G

NOTES

1. CONCRETE SHALL BE CONCRETE CLASS D (BRIDGE).
2. APPROACH SLAB CONCRETE SHALL BE CURED IN ACCORDANCE WITH THE SPECIFICATIONS FOR BRIDGE DECK CONCRETE, SUBSECTION 601.
3. BED COURSE MATERIAL SHALL BE 4" PATTERNED CONCRETE. SEE ROADWAY PLANS FOR ADDITIONAL INFORMATION.
4. BED COURSE MATERIAL SHALL CONFORM TO THE REQUIREMENTS OF SECTION 608. BED COURSE MATERIAL SHALL BE INCLUDED IN THE COST OF ITEM 610, MEDIAN COVER MATERIAL (4 INCH PATTERNED CONCRETE).
5. COVER PLATE SHALL BE RECESSED ¼" INSIDE FACE OF CONCRETE.
6. FOR REMOVAL DETAILS, SEE DWG. NO. B19.
7. FOR BRIDGE RAIL DETAILS, SEE DWG. NO. B22.

KEY NOTES

1. 5" WIDEx4" DEEP UNCOMPRESSED, CLOSED-CELL, FOAMED, CROSS-LINKED, ETHYLENE VINYL ACETATE, LOW-DENSITY POLYETHYLENE COLPOLYMER.
2. CONTRACTOR MAY REPLACE WITH [ ] 1'-0".
3. CONTRACTOR SHALL DRILL AND GROUT MEDIAN CURB DOWELS INTO EXISTING APPROACH SLAB USING HILTIHIT HY-150 INJECTION ADHESIVE OR APPROVED EQUAL.
4. PROVIDE ½" EXPANSION JOINT IN MEDIAN. SEAL WITH POLYSULFIDE OR SILCONE SEALANT. SEALANT COLOR SHALL MATCH COLOR OF MEDIAN COVER MATERIAL.
5. DOWELS SHALL BE PLACED AT A DEPTH OF 6 INCHES FROM THE BOTTOM OF THE SLEEPER SLAB.

PRELIMINARY
SUBJECT TO REVISION

Design	INITIAL	DATE
Designed By	SA	8/05
Checked By		

Detail	INITIAL	DATE
Detailed By	ERS	2/06
Checked By		
Quantities By		
Checked By		

Revision Dates (Preliminary Stage Only) | INITIAL | DATE

s:\tranproj\246177-00\hwydes\plans\brap01.dgn 12:51:12 PM 5/30/2006

Computer File Information	
Creation Date: 02/17/06	Initials: ERS
Last Modification Date: 02/17/06	Initials: ERS
Full Path: S:\Tranproj\ 246177-00\HwyDes\Plans\	
Drawing File Name: brap01.dgn	
CAD Ver. MicroStation V8 Scale: 1"=XX'-0"	Units: ENGLISH

Sheet Revisions

DOUGLAS COUNTY
Department of Public Works
100 Third Street
Castle Rock, CO 80104
Phone: (303) 660-7490
FAX: (303) 688-9343

PBSJ
4601 DTC Blvd.
Suite 700
Denver, CO 80237
Phone: 303/221-7275
Fax: 303/221-7276

As Constructed
No Revisions:
Revised:
Void:

QUEBEC OVER C470
APPROACH SLAB (1 OF 2)

Designer: S. Abraham
Detailer: E. Schawo
Sheet Subset: BRIDGE
Structure Numbers: F-17-HJ, F-17-QT
Subset Sheets: B25 of 41

Project No./Code
C.I. 03-013

Sheet Number 58

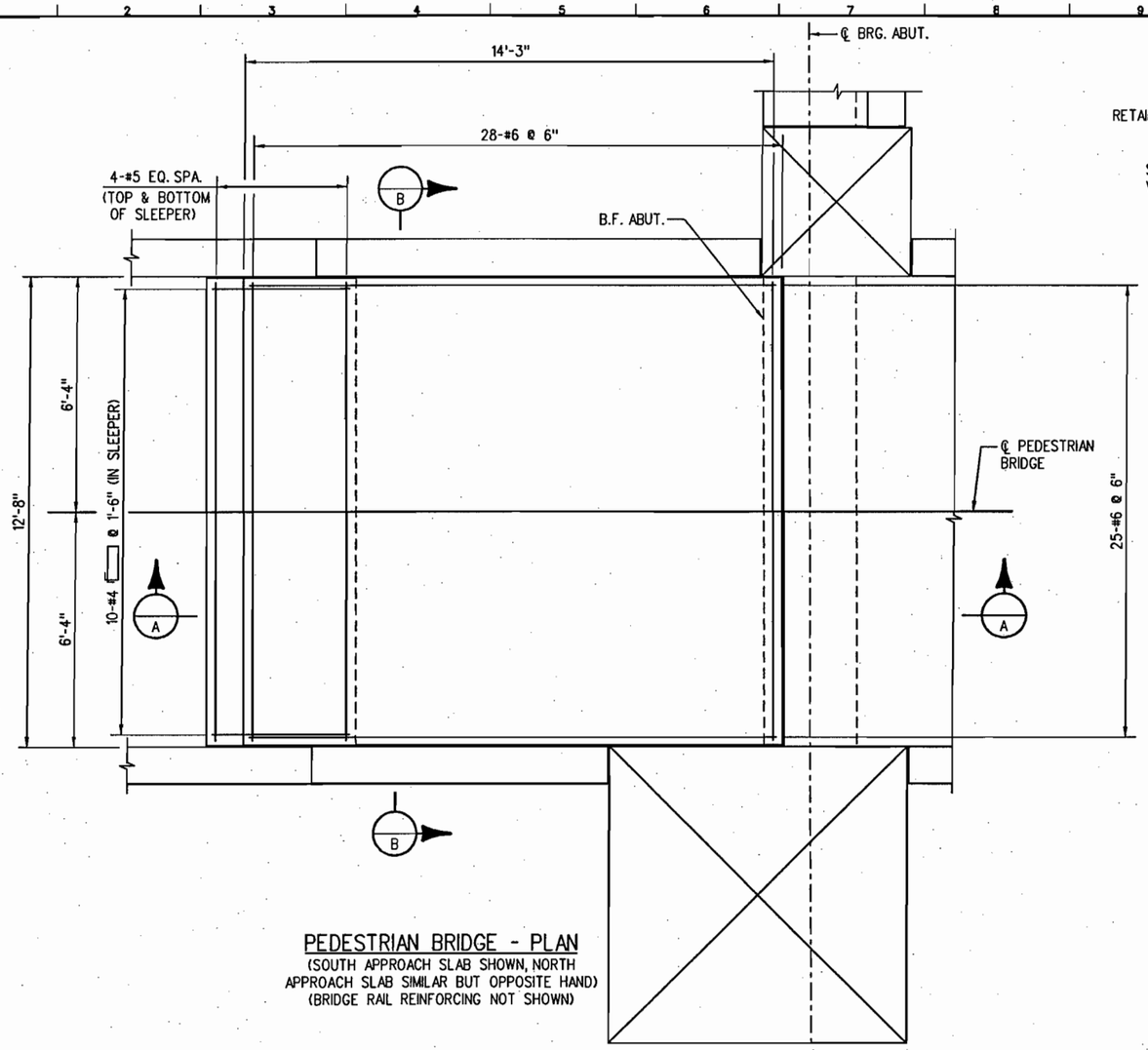

PEDESTRIAN BRIDGE - PLAN
(SOUTH APPROACH SLAB SHOWN, NORTH APPROACH SLAB SIMILAR BUT OPPOSITE HAND)
(BRIDGE RAIL REINFORCING NOT SHOWN)

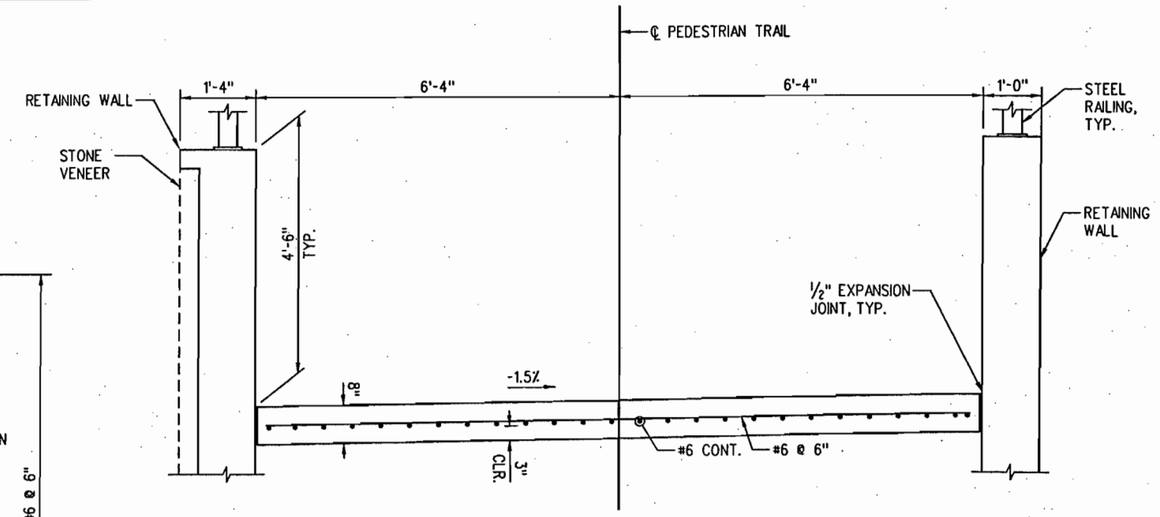

SECTION B
(LOOKING AHEAD STATION)

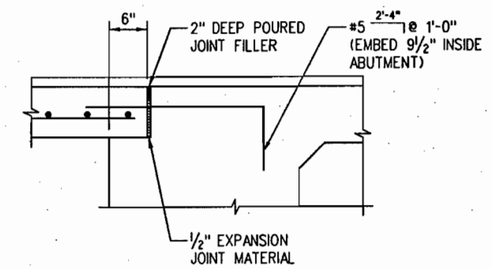

DETAIL C

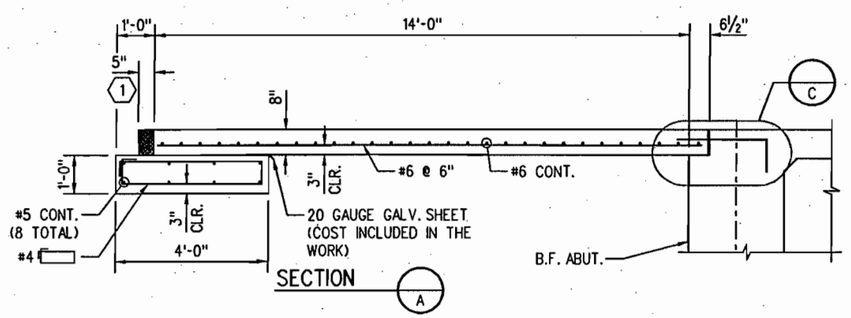

SECTION A

NOTES

1. CONCRETE SHALL BE CONCRETE CLASS D (BRIDGE).
2. APPROACH SLAB CONCRETE SHALL BE CURED IN ACCORDANCE WITH THE SPECIFICATIONS FOR BRIDGE DECK CONCRETE, SUBSECTION 601.
3. FOR RETAINING WALL DETAILS, SEE DWG. NOS. B16 & B17.

KEY NOTES

1. 5" WIDEx4" DEEP UNCOMPRESSED, CLOSED-CELL, FOAMED, CROSS-LINKED, ETHYLENE VINYL ACETATE, LOW-DENSITY POLYETHYLENE COLPOLYMER.

PRELIMINARY
SUBJECT TO REVISION

Design	INITIAL	DATE
Designed By	SA	02/06
Checked By		

Detail	INITIAL	DATE
Detailed By	ERS	03/06
Checked By		

Quantities	INITIAL	DATE
Quantities By		
Checked By		

Revision Dates (Preliminary Stage Only)

12:51:18 PM s:\tranproj\246177-00\hwydes\plans\brap02.dgn 5/30/2006

Computer File Information	
Creation Date: 03/30/06	Initials: ERS
Last Modification Date: 04/11/06	Initials: ERS
Full Path: S:\Tranproj\ 246177-00\HwyDes\Plans\	
Drawing File Name: brap02.dgn	
CAD Ver. MicroStation V8 Scale: NONE	Units: ENGLISH

Sheet Revisions

DOUGLAS COUNTY
Department of Public Works
100 Third Street
Castle Rock, CO 80104
Phone: (303) 660-7490
FAX: (303) 688-9343

PBSJ
4601 DTC Blvd.
Suite 700
Denver, CO 80237
Phone: 303/221-7275
Fax: 303/221-7276

As Constructed
No Revisions:
Revised:
Void:

QUEBEC OVER C470
APPROACH SLAB (2 OF 2)

Designer:	S. Abraham	Structure Numbers	F-17-HJ
Detailer:	E. Schawo		F-17-QT
Sheet Subset:	BRIDGE	Subset Sheets: B26 of 41	

Project No./Code
C.I. 03-013

Sheet Number 59

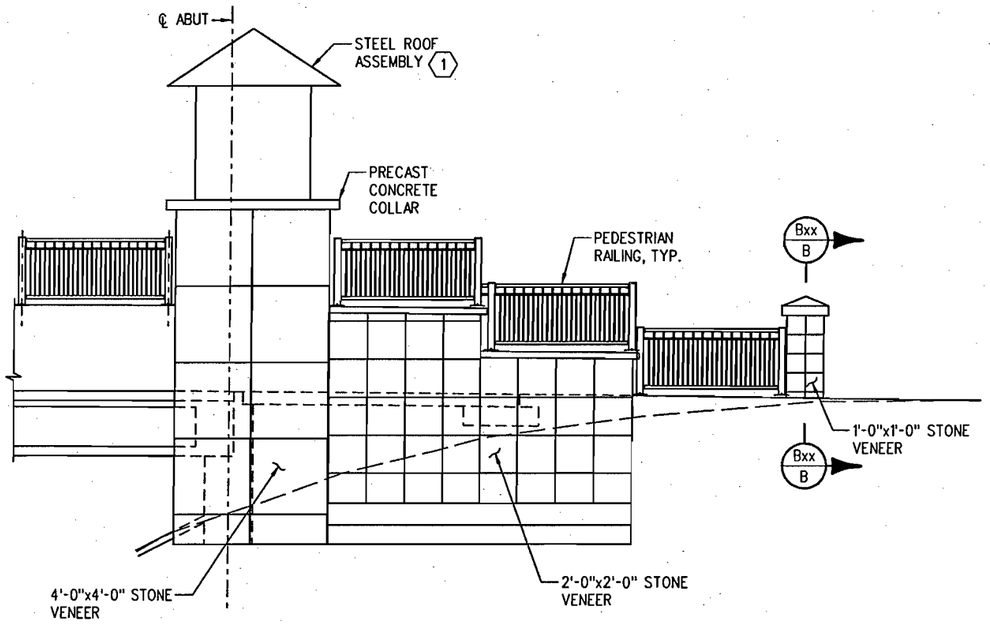

ABUTMENT END VIEW
SCALE: 1/4"=1'-0"

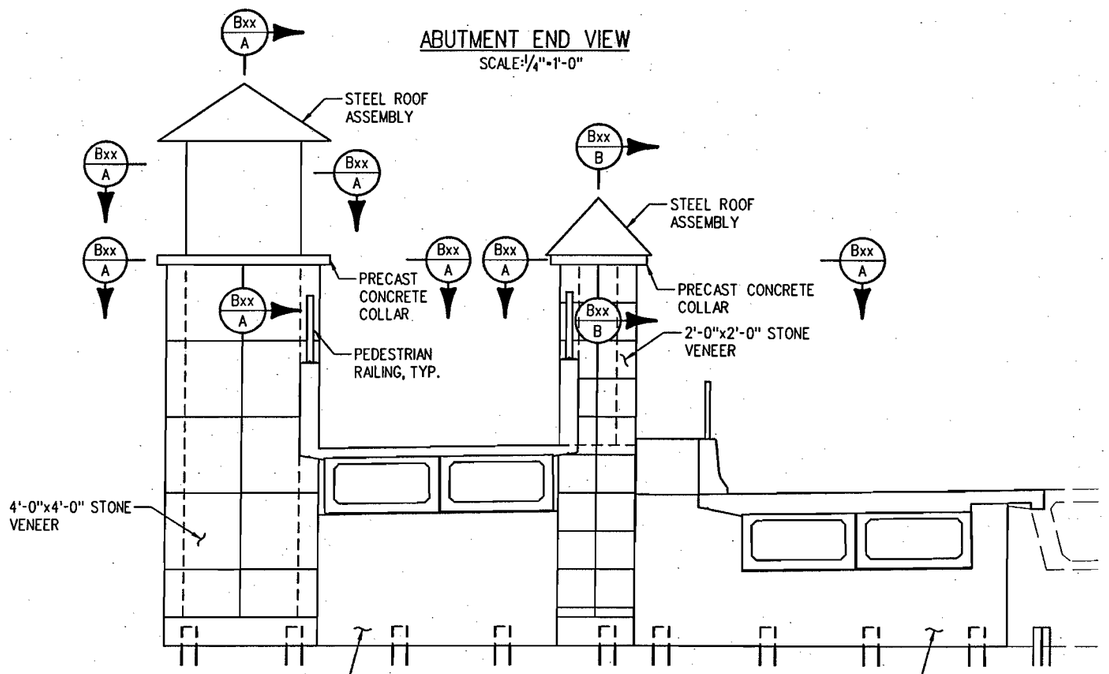

FRONTFACE OF ABUTMENT
SCALE: 1/4"=1'-0"

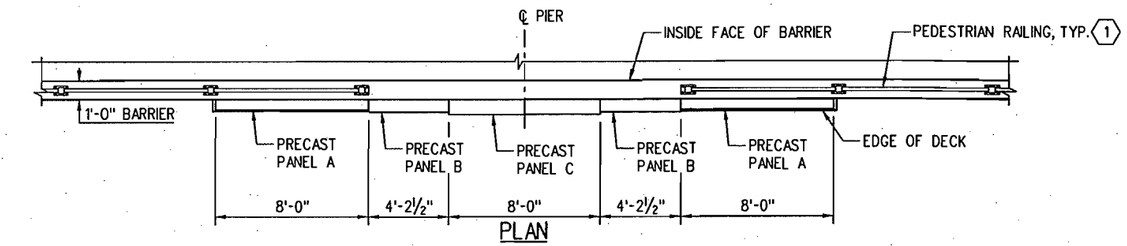

PLAN
SCALE: 1/4"=1'-0"

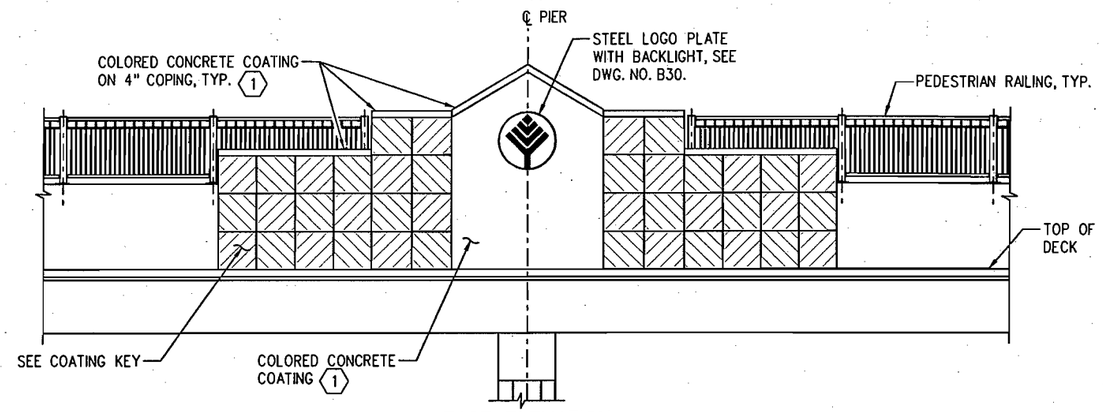

EAST ELEVATION
SCALE: 1/4"=1'-0"

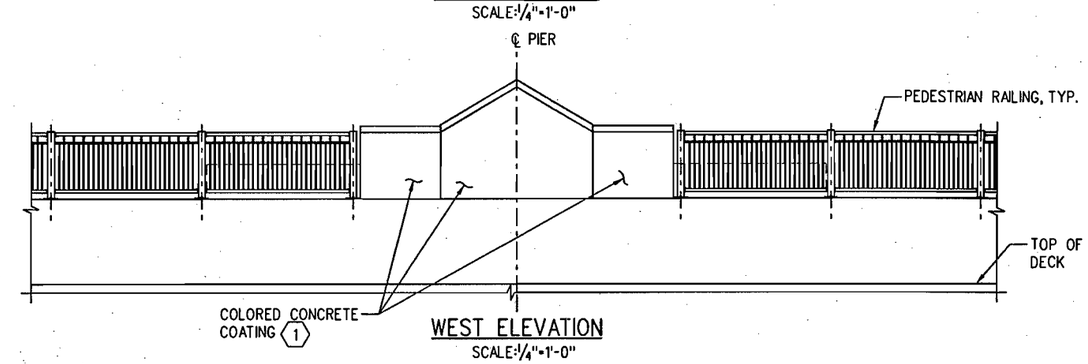

WEST ELEVATION
SCALE: 1/4"=1'-0"

KEY NOTES

1. COLOR SHALL BE EQUIVALENT TO FEDERAL STANDARD 595B COLOR NO. 31667.

COATING KEY (SEE NOTE 1)

- DARK SHADE TO MATCH STONE VENEER AT ABUTMENTS.
- LIGHT SHADE TO MATCH STONE VENEER AT ABUTMENTS.

NOTES

1. FORM LINED AREAS SHALL BE STAINED TO MATCH STONE VENEER. COLOR SHALL BE SELECTED FROM TEST PANELS PROVIED BY THE CONTRACTOR.
2. FOR ABUTMENT DETAILS, SEE DWG. NOS. B10 THRU B14.
3. FOR PRECAST PANEL DETAILS, SEE DWG. NO. B28.

PRELIMINARY
SUBJECT TO REVISION

Design	INITIAL	DATE
Designed By	AGW	03/06
Checked By		

Detail	INITIAL	DATE
Detailed By	AS	04/06
Checked By		

Quantities	INITIAL	DATE
Quantities By		
Checked By		

Revision Dates (Preliminary Stage Only)

s:\tranproj\246177-00\HwyDes\Plans\brad01.dgn
12:51:23 PM
5/30/2006

Computer File Information	
Creation Date: 04/17/06	Initials: AS
Last Modificotion Date: 05/25/06	Initials: ERS
Full Path: S:\Tranproj\ 246177-00\HwyDes\Plans\	
Drawing File Name: brad01.dgn	
CAD Ver. MicroStation V8 Scale: AS SHOWN	Units: ENGLISH

Sheet Revisions

DOUGLAS COUNTY
Department of Public Works
100 Third Street
Castle Rock, CO 80104
Phone: (303) 660-7490
FAX: (303) 688-9343

PBSJ
4601 DTC Blvd.
Suite 700
Denver, CO 80237
Phone: 303/221-7275
Fax: 303/221-7276

As Constructed
No Revisions:
Revised:
Void:

QUEBEC OVER C470
ARCHITECTURAL DETAILS (1 OF 5)

Designer:	S. Abraham	Structure Numbers	F-17-HJ
Detailer:	A. Segura		F-17-QT
Sheet Subset:	BRIDGE	Subset Sheets: B27 of 41	

Project No./Code
C.I. 03-013

Sheet Number 60

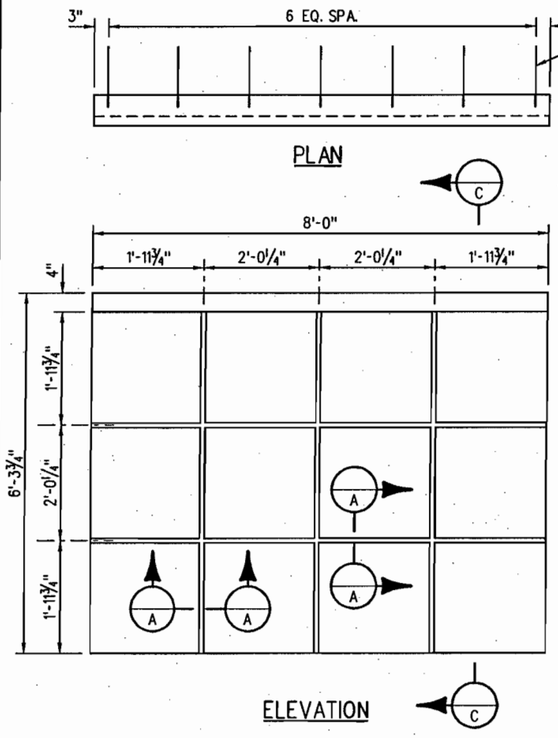

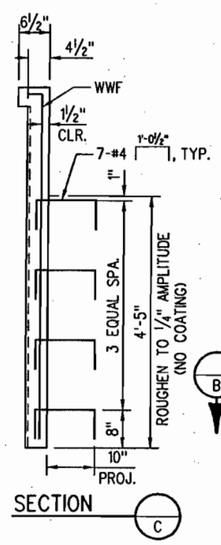

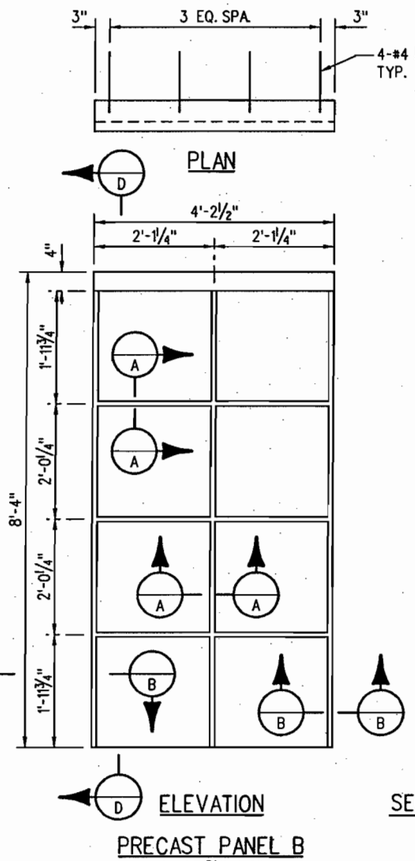

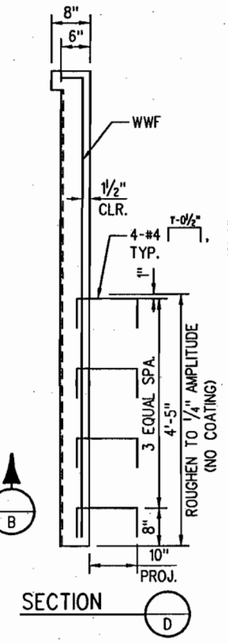

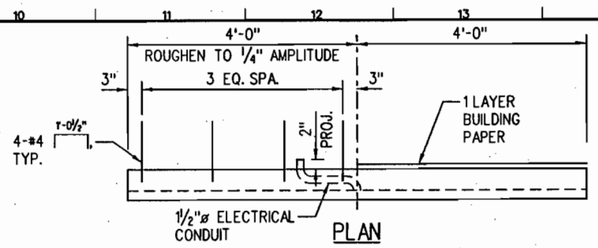

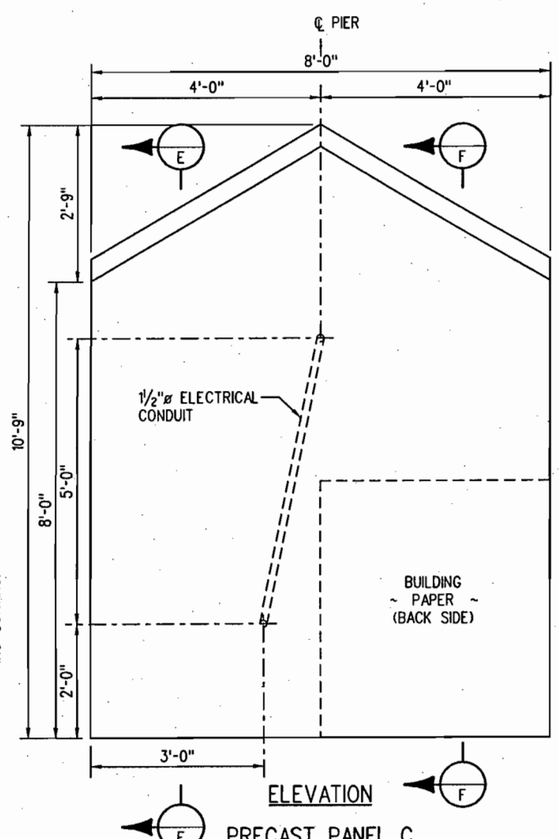

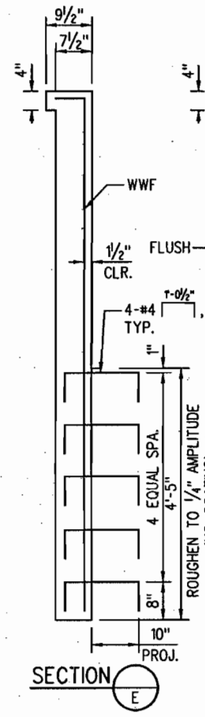

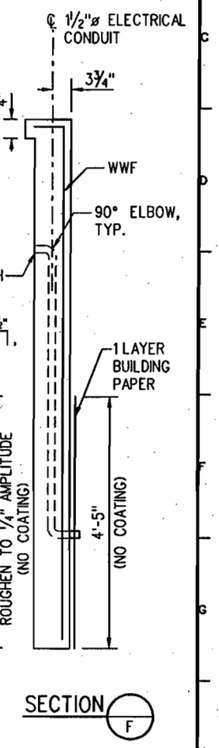

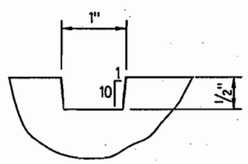

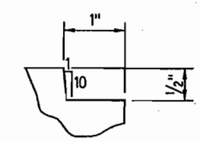

NOTES

1. EXPOSED SURFACES SHALL BE COATED. FOR MORE INFORMATION, SEE DWG. NO. B27.
2. FOR LOCATION OF PANELS, SEE DWG. NO. B27.
3. CONCRETE FOR PANELS SHALL BE CLASS B CONCRETE, f'c = 3,000 PSI.
4. WELDED WIRE FABRIC SHALL BE 4x4W8.3xW8.3 (NON COATED).
5. EXPOSED EDGES SHALL BE CHAMFERED ¼".

PRELIMINARY
SUBJECT TO REVISION

Design	INITIAL	DATE
Designed By	AGW	03/06
Checked By		

Detail	INITIAL	DATE
Detailed By	AS	04/06
Checked By		

Quantities	INITIAL	DATE
Quantities By		
Checked By		

Revision Dates (Preliminary Stage Only)

12:51:28 PM s:\tranproj\246177-00\HwyDes\Plans\brad02.dgn 5/30/2006

Computer File Information		
Creation Date: 04/17/06	Initials: AS	
Last Modificotion Date: 04/17/06	Initials: AS	
Full Path: S:\Tranproj\ 246177-00\HwyDes\Plans\		
Drawing File Name: brbr01.dgn		
CAD Ver. MicroStation V8	Scale: AS SHOWN	Units: ENGLISH

Sheet Revisions

DOUGLAS COUNTY
Department of Public Works
100 Third Street
Castle Rock, CO 80104
Phone: (303) 660-7490
FAX: (303) 688-9343

PBSJ
4601 DTC Blvd.
Suite 700
Denver, CO 80237
Phone: 303/221-7275
Fax: 303/221-7276

As Constructed
No Revisions:
Revised:
Void:

QUEBEC OVER C470
ARCHITECTURAL DETAILS (2 OF 5)

Designer:	S. Abraham	Structure Numbers	F-17-HJ
Detailer:	A. Segura		F-17-QT
Sheet Subset:	BRIDGE	Subset Sheets: B28 of 41	

Project No./Code
C.I. 03-013

Sheet Number 61

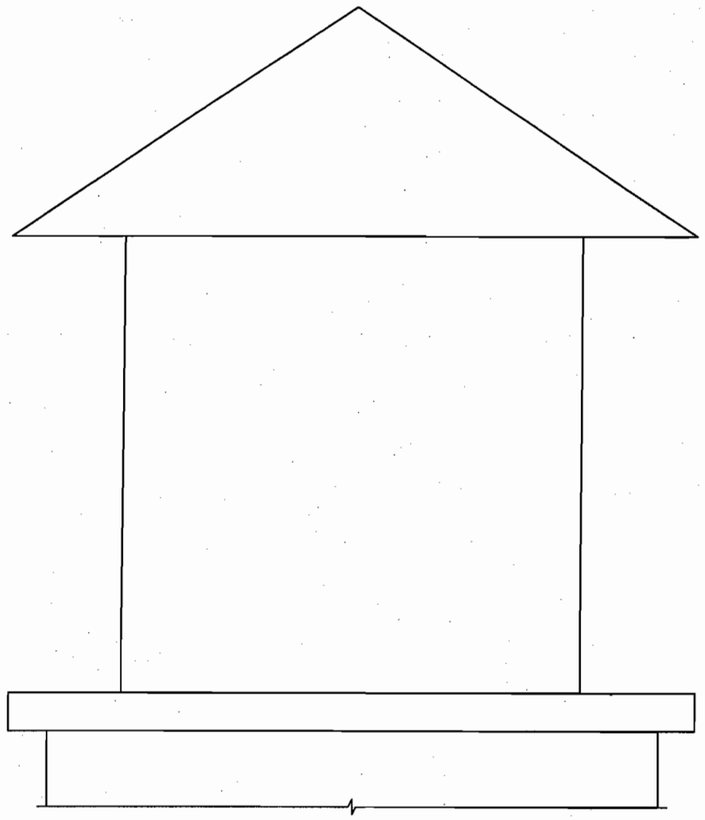

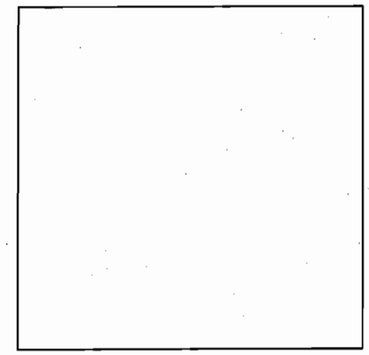

SECTION C

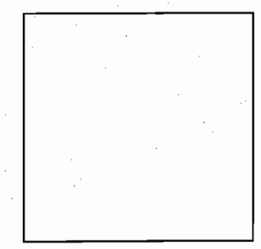

SECTION D

PRELIMINARY
SUBJECT TO REVISION

Computer File Information	
Creation Date: 04/17/06	Initials: ERS
Last Modification Date: 05/25/06	Initials: ERS
Full Path: S:\Tranproj\ 246177-00\HwyDes\Plans\	
Drawing File Name: brad03.dgn	
CAD Ver. MicroStation V8 Scale: AS SHOWN	Units: ENGLISH

Sheet Revisions

DOUGLAS COUNTY
Department of Public Works
100 Third Street
Castle Rock, CO 80104
Phone: (303) 660-7490
FAX: (303) 688-9343

PBSJ
4601 DTC Blvd.
Suite 700
Denver, CO 80237
Phone: 303/221-7275
Fax: 303/221-7276

As Constructed
No Revisions:
Revised:
Void:

QUEBEC OVER C470
ARCHITECTURAL DETAILS (3 OF 5)

Designer: S. Abraham
Detailer: E. Schawo
Sheet Subset: BRIDGE
Structure Numbers: F-17-HJ, F-17-QT
Subset Sheets: B29 of 41

Project No./Code
C.I. 03-013

Sheet Number 62

Revision Dates (Preliminary Stage Only)

Design	INITIAL	DATE
Designed By	AGW	03/06
Checked By		

Detail	INITIAL	DATE
Detailed By	AS	04/06
Checked By		

Quantities	INITIAL	DATE
Quantities By		
Checked By		

12:51:33 PM s:\tranproj\246177-00\HwyDes\Plans\brad03.dgn

5/30/2006

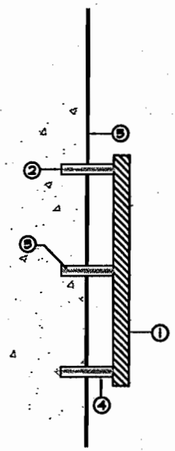

1. 1/4" THICK ALUMINUM SIGN LOGO, 24" DIAMETER
2. DRILL HOLES WITH TEMPLATE SUPPLIED BY MFG. IN WALL TO ACCEPT BRASS STUDS SET IN PLACE WITH QUICK SET CEMENT
3. 1/4" X 3" BRASS STUDS
4. 3" NYLON SPACER
5. FRONT FACE OF PEDESTRIAN BRIDGE

1 LOGO ATTACHMENT TO WALL

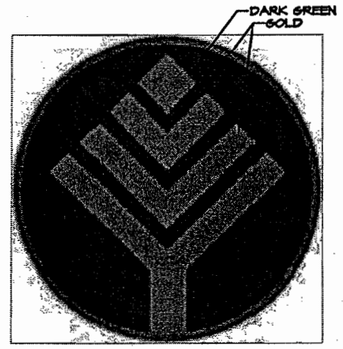

NOTES:
1. DARK GREEN SHALL MATCH PMS 330.
2. GOLD SHALL MATCH PMS 871.
3. COLORS SHALL BE APPLIED WITH MAP COLOR SYSTEM, OR APPROVED EQUAL.
4. CONTRACTOR SHALL PROVIDE SHOP DRAWINGS OF LOGO TO ARCHITECT PRIOR TO FABRICATION.
5. LOGO ARTWORK WILL BE PROVIDED BY CITY OF LONE TREE.

2 CITY OF LONE TREE LOGO (24" DIAMETER)

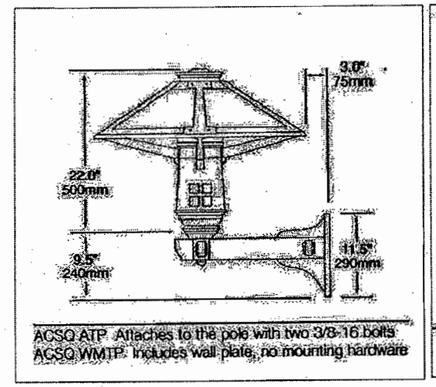

3a LIGHT MOUNTING

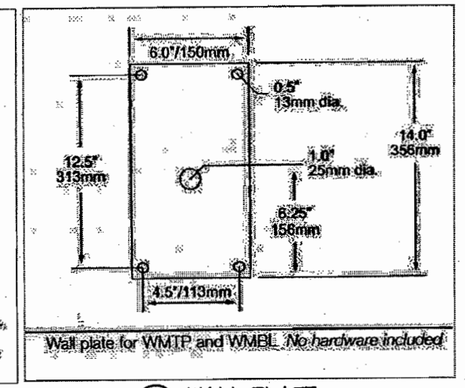

3b WALL PLATE

NOTES:
1. MONUMENT SCONCE SHALL BE ARCHITECTURAL AREA LIGHTING, ARTS & CRAFTS PEDESTRIAN SCALE SQUARE FIXTURE, ACSQ WMTP (OR APPROVED EQUAL).
2. ONE LIGHT SHALL BE MOUNTED AT THE LOCATIONS SHOWN ON THE PLANS TO EACH SIDE OF THE LARGE BRIDGE END MONUMENTS.
3. THE FIXTURE SHALL BE CST ALUMINUM WITH DARK GREEN FINISH AND NATURAL COPPER SHADE INSERT FOR IES FULL CUTOFF.
4. LAMP SHALL BE 150 WATT METAL HALIDE WITH MEDIUM BASE, CLEAR ED-17 LAMPS.

3 SCONCE LIGHT

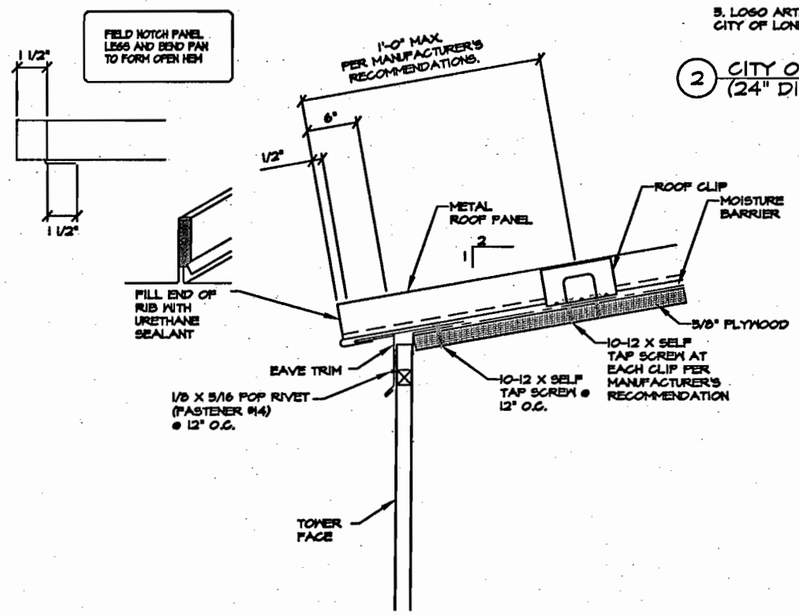

4 TOWER ROOF EAVE NOT TO SCALE

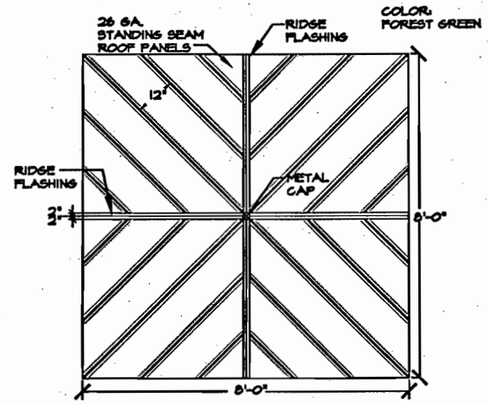

5 TOWER ROOF PLAN NOT TO SCALE

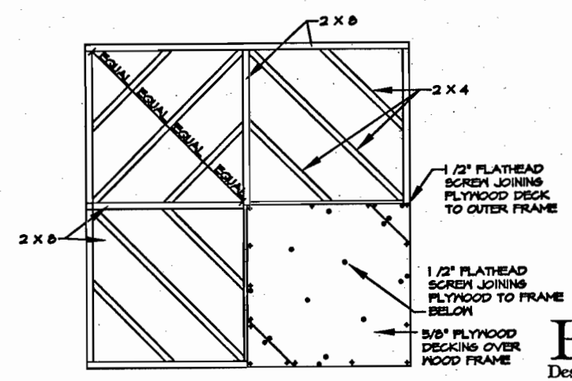

6 ROOF FRAMING AND PLYWOOD DECKING PLAN NOT TO SCALE

PKM
Design Group, Inc.
7353 S. ALTON WAY, SUITE 125
CENTENNIAL, CO 80112
PH. (303) 804-0080
FAX (303) 804-0070

PRELIMINARY
SUBJECT TO REVISION

Revision Dates (Preliminary Stage Only)	

Quantities			
	INITIAL	DATE	
Quantities By			
Checked By			

Detail			
	INITIAL	DATE	
Detailed By			
Checked By			

Design			
	INITIAL	DATE	
Designed By			
Checked By			

Computer File Information	
Creation Date: 05/03/06	Initials: PKM
Last Modification Date:	Initials: DSL
Full Path: QUEBEC\CADD XREF\BRIDGE DETAILS.DWG	
Drawing File Name: BRIDGE DETAILS	
CAD Ver. MicroStation V8 Scale:	Units: ENGLISH

Sheet Revisions		
--	--	--
--	--	--
--	--	--
--	--	--
--	--	--

DOUGLAS COUNTY
Department of Public Works
100 Third Street
Castle Rock, CO 80104
Phone: (303) 660-7490
FAX: (303) 688-9343

PBSJ
4601 DTC Blvd.
Suite 700
Denver, CO 80237
Phone: 303/221-7275
Fax: 303/221-7276

As Constructed	
No Revisions:	
Revised:	--
Void:	--

QUEBEC OVER C470
PEDESTRIAN BRIDGE

Designer:	PKM	Structure Numbers	F-17-HJ
Detailer:	PKM		F-17-QT
Sheet Subset:	BRIDGE	Subset Sheets:	B30 of 41

Project No./Code
C.I. 03-013
--
Sheet Number 63 --

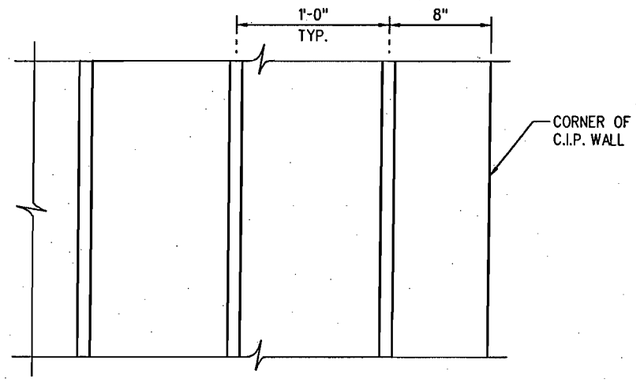

DOVETAIL SLOT LAYOUT

(REQUIRED AT ALL STONE VENEER AREAS)

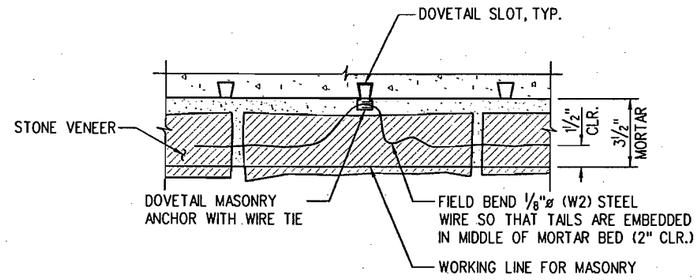

FACING MASONRY ANCHOR DETAIL - PLAN

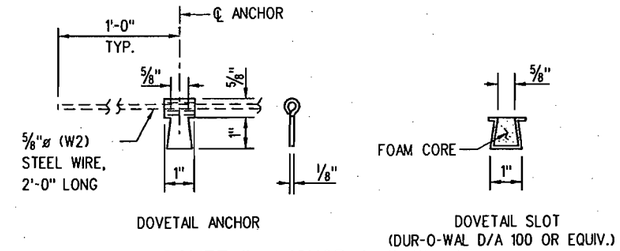

DOVETAIL ANCHOR & SLOT DETAIL

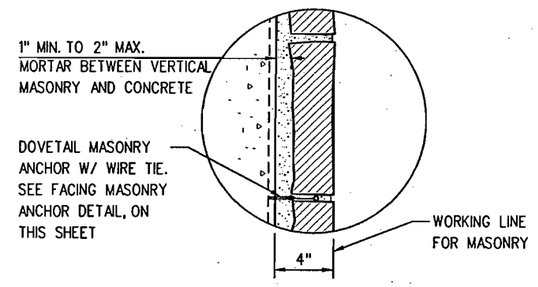

MASONRY BULGE DETAIL

(FOR ADDITIONAL CLASS B MASONRY)

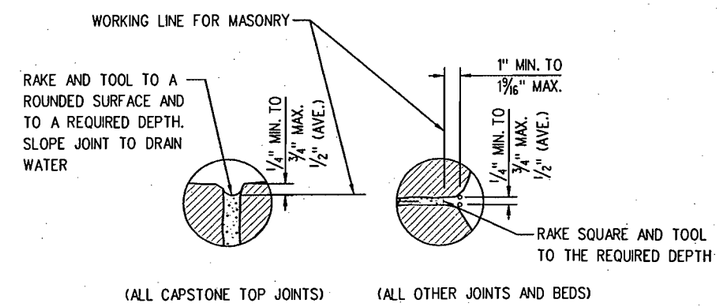

MASONRY MORTAR JOINT AND BED DETAILS

NOTES

1. THE DOVETAIL SLOTS SHALL BE TYPE D/A 100 AS MANUFACTURED
2. BY DUR-O-WAL, INC., OR AN APPROVED EQUAL. THEY SHALL BE 22 GAGE HOT-DIPPED GALVANIZED STEEL, FILLED WITH FOAM AND WITH A THROAT OPENING WIDTH OF 5/8".
3. THE DOVETAIL ANCHORS SHALL BE TYPE D/A 720 (WITHOUT TRIANGULAR ANCHOR) AS MANUFACTURED BY DUR-O-WAL, INC., OR AN APPROVED EQUAL. MATERIAL FOR DOVETAIL ANCHORS SHALL BE 1/8" THICK HOT-DIPPED GALVANIZED STEEL.
4. WIRE FOR ANCHOR SHALL BE 1/8"ø (W2) PLAIN COLD-DRAWN STEEL WIRE CONFORMING TO ASTM A82. WIRE SHALL BE MILL GALVANIZED CONFORMING TO ASTM A641.
5. TOOL SEALANT TO A ROUNDED SURFACE AND THE REQUIRED DIMENSIONS SHOWN. COLOR TO MATCH MORTAR JOINTS.

PRELIMINARY
SUBJECT TO REVISION

Design			
	INITIAL	DATE	
Designed By	AGW	03/06	Detailed By
Checked By			Checked By

Detail			
	INITIAL	DATE	
Detailed By	AS	04/06	Quantities By
Checked By			Checked By

Revision Dates (Preliminary Stage Only)		
	INITIAL	DATE
Quantities		

12:51:42 PM s:\tranproj\246177-00\HwyDes\Plans\brad05.dgn
5/30/2006

Computer File Information	
Creation Date: 05/25/06	Initials: ERS
Last Modification Date: 05/25/06	Initials: ERS
Full Path: S:\Tranproj\ 246177-00\HwyDes\Plans\	
Drawing File Name: brad05.dgn	
CAD Ver. MicroStation V8 Scale: NO SCALE	Units: ENGLISH

Sheet Revisions

DOUGLAS COUNTY
Department of Public Works
100 Third Street
Castle Rock, CO 80104
Phone: (303) 660-7490
FAX: (303) 688-9343

PBSJ
4601 DTC Blvd.
Suite 700
Denver, CO 80237
Phone: 303/221-7275
Fax: 303/221-7276

As Constructed
No Revisions:
Revised:
Void:

QUEBEC OVER C470
ARCHITECTURAL DETAILS (5 OF 5)

Designer:	S. Abraham	Structure Numbers	F-17-HJ
Detailer:	E. Schawo		F-17-QT
Sheet Subset:	BRIDGE	Subset Sheets: B31 of 41	

Project No./Code
C.I. 03-013

Sheet Number 64

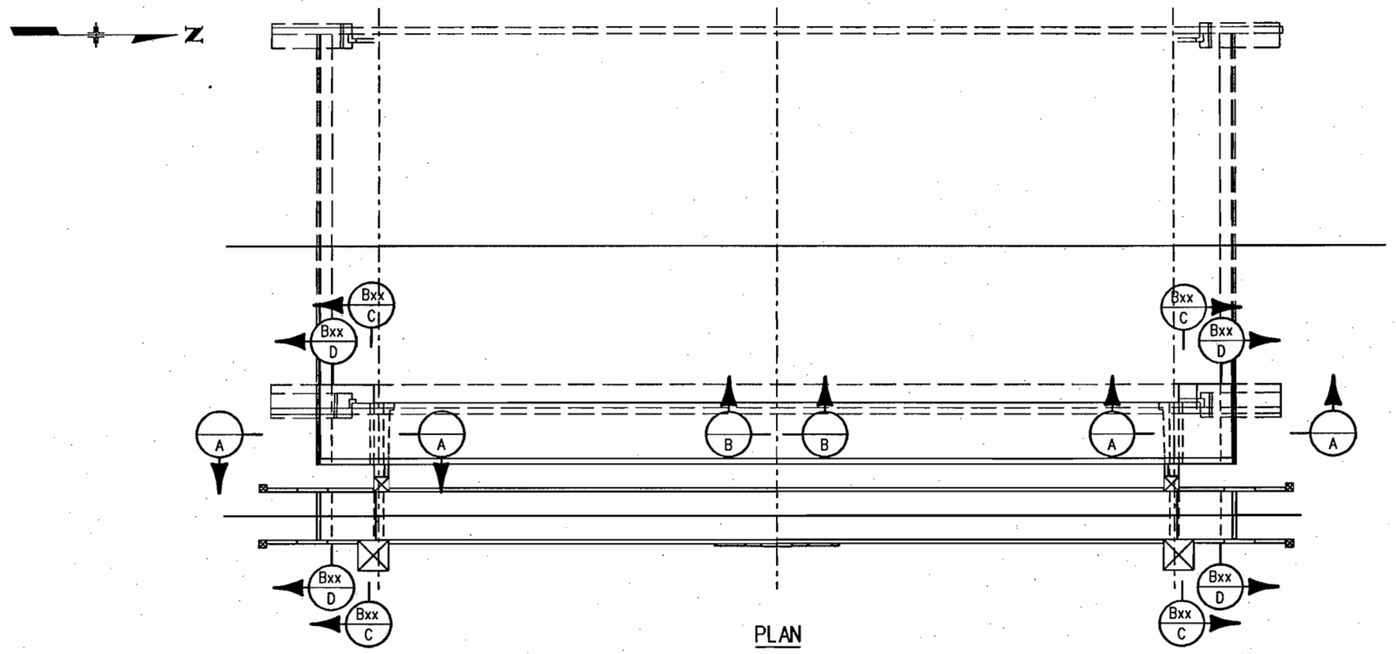

PLAN

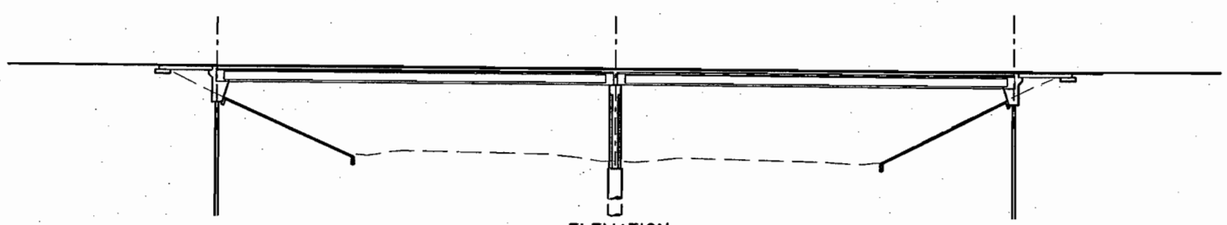

ELEVATION

(QUEBEC WIDENING ELEVATION SHOWN, PEDESTRIAN BRIDGE ELEVATION SIMILAR)

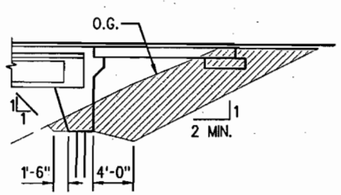

SECTION (EXCAVATION) A

(QUEBEC SHOWN, PEDESTRIAN TRAIL SIMILAR)

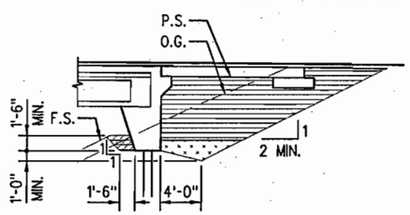

SECTION (BACKFILL) A

(QUEBEC WIDENING SHOWN, PEDESTRIAN TRAIL SIMILAR)

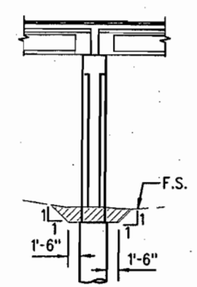

SECTION (EXCAVATION) B

(QUEBEC SHOWN, PEDESTRIAN TRAIL SIMILAR)

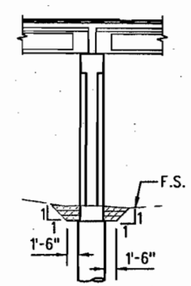

SECTION (BACKFILL) B

(QUEBEC SHOWN, PEDESTRIAN TRAIL SIMILAR)

KEY NOTES

(1) FOR PURPOSES OF QUANTITY CALCULATIONS, THIS TEMPLATE DOES NOT EXTEND BEYOND END OF WINGWALL.

NOTES

1. UNLESS SHOWN OTHERWISE IN THE PLANS, THIS DRAWING GIVES THE MINIMUM PAYMENTS FOR STRUCTURE EXCAVATION AND STRUCTURE BACKFILL. THE CONTRACTOR MAY ELECT TO EXTEND THE STRUCTURE EXCAVATION AND STRUCTURE BACKFILL BEYOND THE LIMITS SHOWN HERE. ANY ADDITIONAL EXCAVATION OR BACKFILL BEYOND THESE LIMITS WILL NOT BE MEASURED NOR PAID FOR. STRUCTURE BACKFILL MATERIAL PLACED OUTSIDE OF THESE PAY LIMITS SHALL MEET THE REQUIREMENTS OF THE STRUCTURE BACKFILL MATERIAL SHOWN WITHIN THE PAY LIMITS: STRUCTURE BACKFILL (CLASS 2) OR MECHANICALLY STABILIZED BACKFILL, AS SHOWN ON DWG. NO. B34.
2. STRUCTURE EXCAVATION FOR SLOPE PAVING NOT SHOWN. SEE DWG. NO. B35 FOR DETAILS.

LEGEND

- ROADWAY EXCAVATION
- STRUCTURE EXCAVATION
- STRUCTURE BACKFILL (CLASS 1) WITH MECHANICAL REINFORCEMENT OF SOIL
- STRUCTURE BACKFILL (CLASS 2)
- FILTER MATERIAL

ABBREVIATIONS

O.G. ORIGINAL GROUND

P.S. PLANNED SUBGRADE

F.S. PLANNED FINISHED GRADE

PRELIMINARY
SUBJECT TO REVISION

Revision Dates (Preliminary Stage Only)

Quantities	INITIAL	DATE
Quantities By		
Checked By		

Detail	INITIAL	DATE
Detailed By	ARP	3/04
Checked By		

Design	INITIAL	DATE
Designed By	DAN	3/04
Checked By		

s:\tranproj\246177-00\hwydes\plans\breb01.dgn 12:51:48 PM 5/30/2006

Computer File Information		
Creation Date: 03/07/06	Initials: ERS	
Last Modification Date: 03/21/06	Initials: ERS	
Full Path: S:\Tranproj\ 246177-00\HwyDes\Plans\		
Drawing File Name: breb01.dgn		
CAD Ver. MicroStation V8 Scale: NONE	Units: ENGLISH	

Sheet Revisions

DOUGLAS COUNTY
Department of Public Works
100 Third Street
Castle Rock, CO 80104
Phone: (303) 660-7490
FAX: (303) 688-9343

PBSJ
4601 DTC Blvd.
Suite 700
Denver, CO 80237
Phone: 303/221-7275
Fax: 303/221-7276

As Constructed
No Revisions:
Revised:
Void:

QUEBEC OVER C470
EXCAVATION AND BACKFILL (1 OF 2)

Designer:	D. Nemovitz	Structure Numbers	F-17-HJ
Detailer:	E. Schowo		F-17-QT
Sheet Subset:	BRIDGE	Subset Sheets: B32 of 41	

Project No./Code
C.I. 03-013

Sheet Number 65

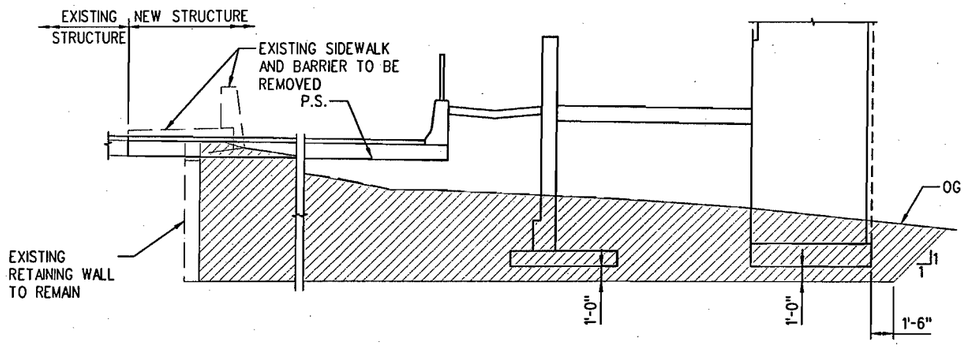

SECTION (EXCAVATION) C

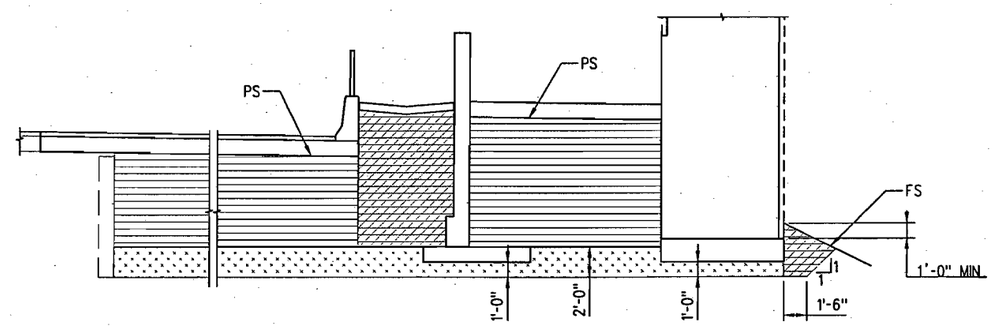

SECTION (BACKFILL) C

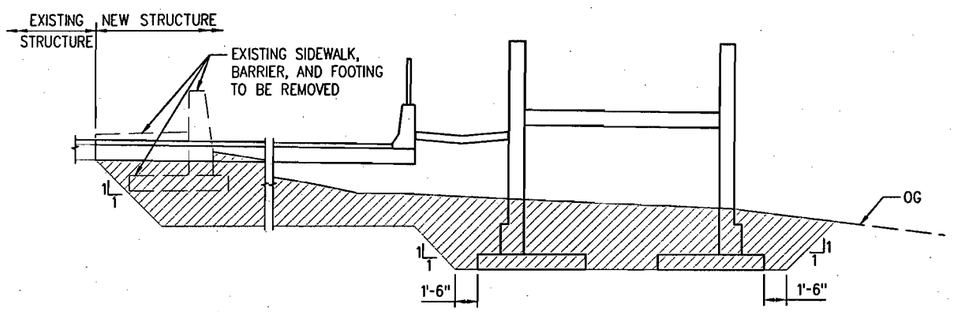

SECTION (EXCAVATION) D

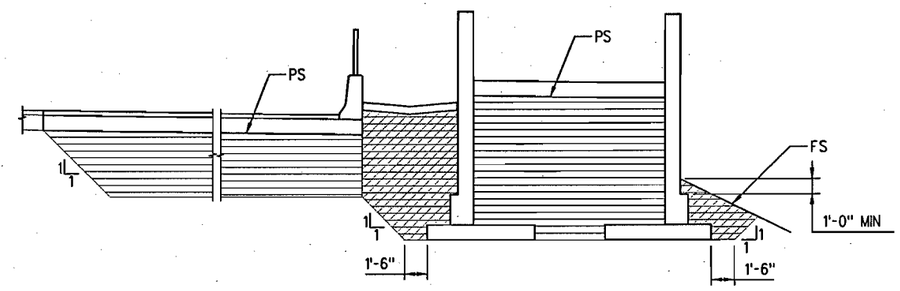

SECTION (BACKFILL) D

NOTES

1. FOR ADDITONAL INFORMATION, SEE DWG. NO. B35.

LEGEND

- ROADWAY EXCAVATION
- STRUCTURE EXCAVATION
- STRUCTURE BACKFILL (CLASS 1) WITH MECHANICAL REINFORCEMENT OF SOIL
- STRUCTURE BACKFILL (CLASS 2)
- FILTER MATERIAL

ABBREVIATIONS

O.G. ORIGINAL GROUND
P.S. PLANNED SUBGRADE
F.S. PLANNED FINISHED GRADE

PRELIMINARY
SUBJECT TO REVISION

Revision Dates (Preliminary Stage Only)	

Design			Detail			Quantities		
	INITIAL	DATE		INITIAL	DATE		INITIAL	DATE
Designed By	DAN	3/04	Detailed By	ARP	3/04	Quantities By		
Checked By			Checked By			Checked By		

12:51:53 PM s:\tranproj\246177-00\hwydes\plans\breb02.dgn
5/30/2006

Computer File Information		
Creation Date: 03/07/06	Initials: ERS	
Last Modification Date: 03/21/06	Initials: ERS	
Full Path: S:\Tranproj\ 246177-00\HwyDes\Plans\		
Drawing File Name: breb02.dgn		
CAD Ver. MicroStation V8 Scale: NONE	Units: ENGLISH	

Sheet Revisions

DOUGLAS COUNTY
Department of Public Works
100 Third Street
Castle Rock, CO 80104
Phone: (303) 660-7490
FAX: (303) 688-9343

PBSJ
4601 DTC Blvd.
Suite 700
Denver, CO 80237
Phone: 303/221-7275
Fax: 303/221-7276

As Constructed
No Revisions:
Revised:
Void:

QUEBEC OVER C470
EXCAVATION AND BACKFILL (2 OF2)

Designer:	D. Nemovitz	Structure Numbers	F-17-HJ
Detailer:	E. Schawo		F-17-QT
Sheet Subset:	BRIDGE	Subset Sheets: B33 of 41	

Project No./Code
C.I. 03-013

Sheet Number 66

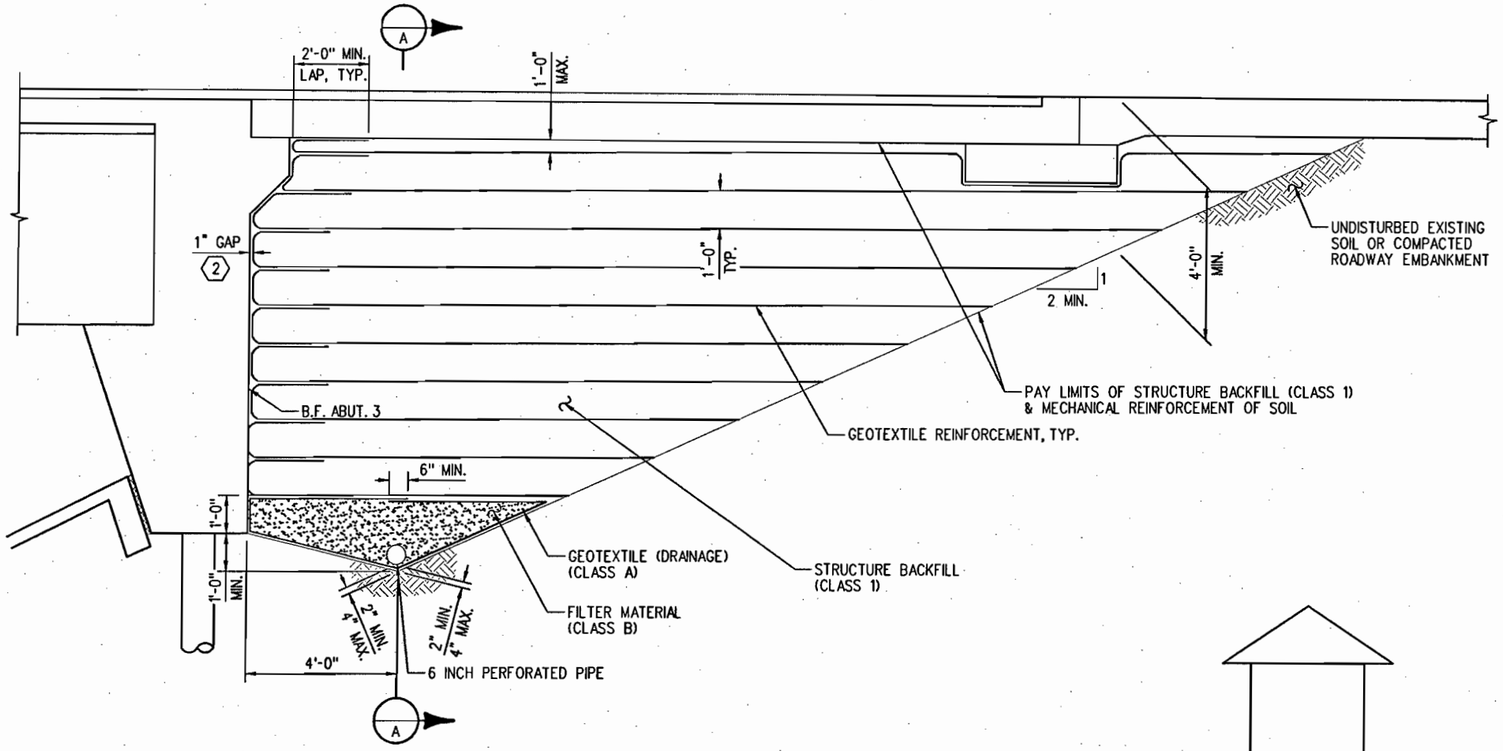

SECTION PERPENDICULAR TO ABUTMENT

(BRIDGE WIDENING SHOWN, PEDESTRIAN BRIDGE SIMILAR)

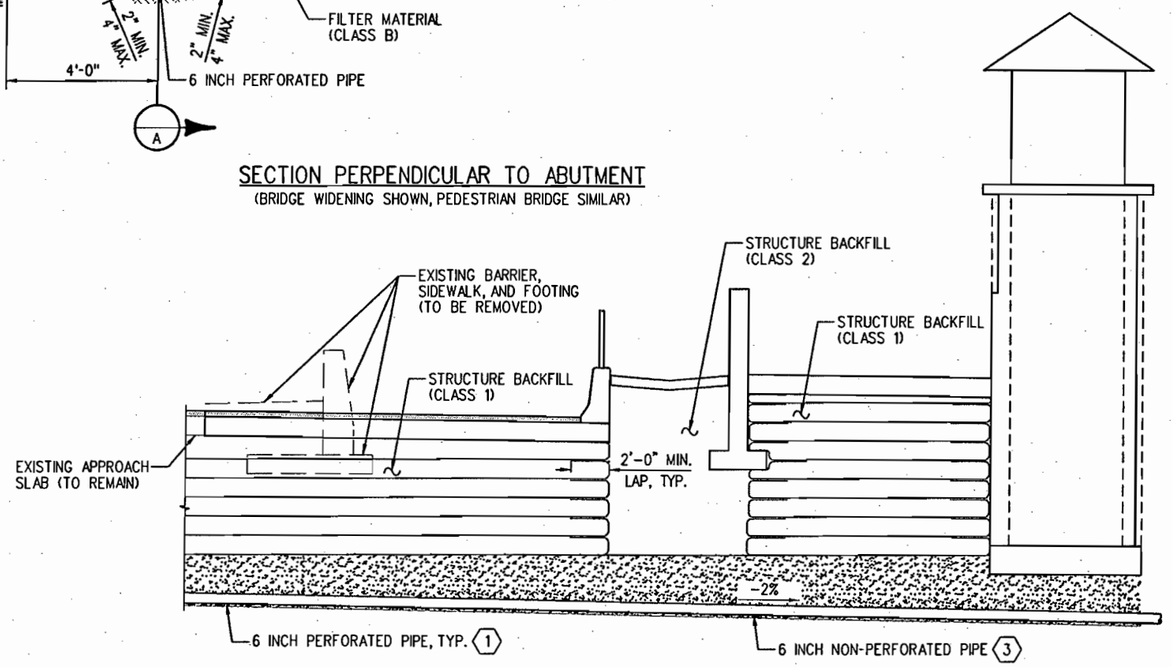

SECTION A

KEY NOTES

1. SLOPE TO DRAIN TOWARD THE NORTH AT 2% MINIMUM. AFTER CLEARING THE WINGWALL, CONTINUE RUN WITH 6 INCH NON-PERFORATED PIPE TO DAYLIGHT. BENDS IN PIPE SHALL NOT EXCEED 45°.
2. PROVIDE 1" GAP BETWEEN ABUTMENT AND BACKFILL. DO NOT PROVIDE GAP AT THE BOTTOM 2, NOR THE TOP 2, LAYERS OF REINFORCED SOIL. METHOD OF MAINTAINING 1" GAP DURING CONSTRUCTION SHALL BE SUBMITTED TO ENGINEER FOR APPROVAL.
3. THE 6 INCH NON-PERFORATED PIPE OUTLET END SHALL BE MARKED WITH A DELINEATOR POST, AND HAVE AN ANIMAL GUARD AND AN EROSION CONTROL PAD AS SHOWN IN "OUTLET PIPE END TREATMENT" DETAIL ON STANDARD PLAN NO. M-605-1.

NOTES

1. PAYMENT WILL BE MADE UNDER ITEM 206, MECHANICAL REINFORCEMENT OF SOIL, AND ITEM 206, STRUCTURE BACKFILL (CLASS 1). ALL WORK AND MATERIALS NECESSARY TO INSTALL 6 INCH PERFORATED PIPE UNDERDRAIN, AND SUBSURFACE DRAIN OUTLET WILL NOT BE MEASURED AND PAID FOR SEPARATELY, BUT SHALL BE INCLUDED IN THE WORK.
2. 6 INCH PERFORATED PIPE UNDERDRAIN INCLUDES FILTER MATERIAL (CLASS B) AND THE GEOTEXTILE (DRAINAGE) (CLASS A) SURROUNDING THE FILTER MATERIAL.
3. SUBSURFACE DRAIN OUTLET INCLUDES 6 INCH NON-PERFORATED PIPE, END TREATMENT AND ANY COUPLERS OR ELBOWS NECESSARY FOR INSTALLATION.
4. THE REINFORCEMENT AND BACKFILL OF EACH LAYER SHALL BE PLACED IN SEQUENCE AND COMPACTED COMPLETELY BEFORE MOVING TO THE NEXT UPPER LAYER. GEOTEXTILE (REINFORCEMENT) SHALL BE PLACED BY ALTERNATING MACHINE DIRECTION (MD) WITH CROSS MACHINE DIRECTION (XD) FROM LAYER TO LAYER.
5. GEOTEXTILE (REINFORCEMENT) SHALL BE WOVEN FABRIC WITH A MINIMUM AVERAGE ROLL VALUE OF 4800 LB PER FT. BASED ON ASTM D4595.
6. THE GEOTEXTILE REINFORCEMENT WRAP AT BACK FACE OF ABUTMENT SHALL BE PULLED BACK SLACK-FREE WITH ITS END ANCHORED TO SOIL UNDERNEATH WITH STAPLES OR PINS.
7. MINIMUM SPLICE OF ALL GEOTEXTILE SHALL CONSIST OF 6 INCH OVERLAP.
8. INSTALLATION OF PERFORATED PIPE AND SUBSURFACE DRAIN OUTLET WILL CONFORM TO THE CONSTRUCTION REQUIREMENTS OF SECTION 605.03 AND 605.06, RESPECTIVELY.

PRELIMINARY
SUBJECT TO REVISION

Design	INITIAL	DATE
Designed By	SA	8/05
Checked By		

Detail	INITIAL	DATE
Detailed By	ERS	3/06
Checked By		

Quantities	INITIAL	DATE
Quantities By		
Checked By		

Revision Dates (Preliminary Slope Only)

12:52:25 PM S:\tranproj\246177-00\hwydes\plans\brbf01.dgn

5/30/2006

Computer File Information	
Creation Date: 03/14/06	Initials: ERS
Last Modification Date: 03/14/06	Initials: ERS
Full Path: S:\Tranproj\ 246177-00\HwyDes\Plans\	
Drawing File Name: brbf01.dgn	
CAD Ver. MicroStation V8 Scale: NONE	Units: ENGLISH

Sheet Revisions

DOUGLAS COUNTY
Department of Public Works
100 Third Street
Castle Rock, CO 80104
Phone: (303) 660-7490
FAX: (303) 688-9343

PBSJ
4601 DTC Blvd.
Suite 700
Denver, CO 80237
Phone: 303/221-7275
Fax: 303/221-7276

As Constructed
No Revisions:
Revised:
Void:

QUEBEC OVER C470
MECHANICALLY STABILIZED BACKFILL

Designer:	S. Abraham	Structure Numbers	F-17-HJ
Detailer:	E. Schowo		F-17-QT
Sheet Subset:	BRIDGE	Subset Sheets: B34 of 41	

Project No./Code
C.I. 03-013

Sheet Number 67

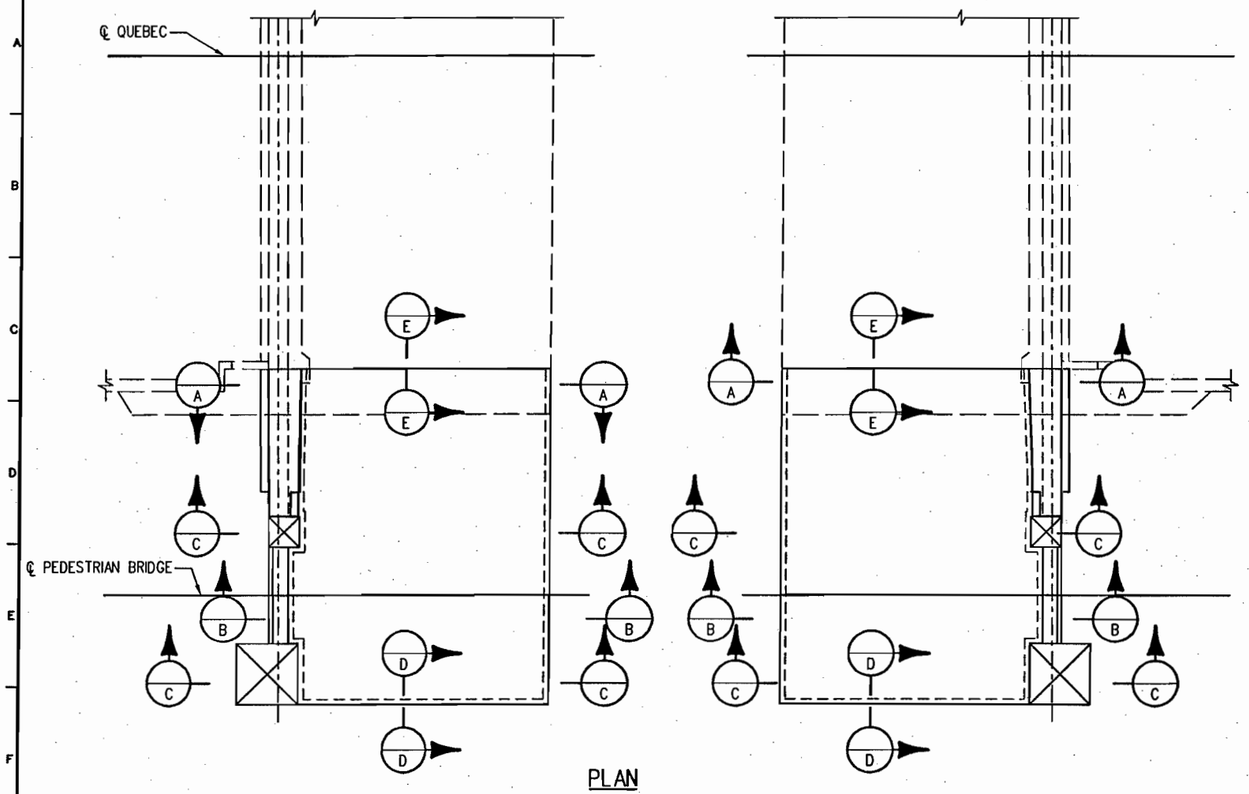

PLAN

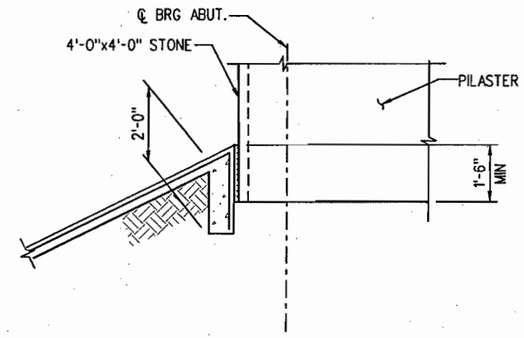

SECTION C

(DIMENSIONS SIMILAR TO "SECTION A", EXCEPT AS SHOWN)

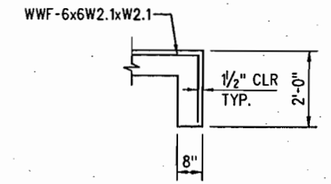

SECTION D

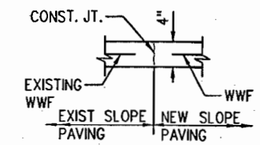

SECTION E

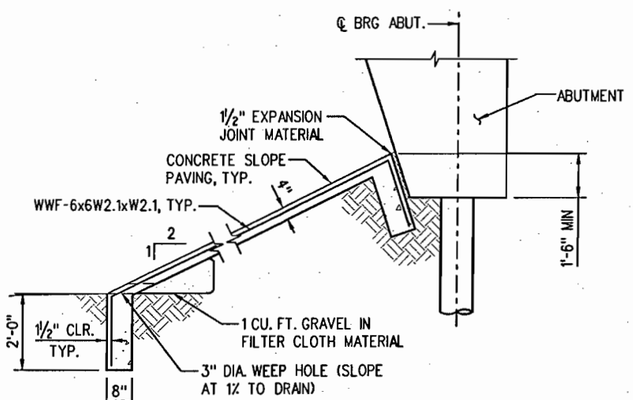

SECTION A

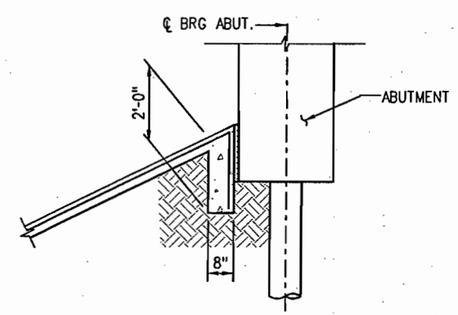

SECTION B

(DIMENSIONS SIMILAR TO "SECTION A", EXCEPT AS SHOWN)

KEY NOTES

1. INCLUDED IN ITEM 507, CONCRETE SLOPE AND DITCH PAVING (REINFORCED).
2. FILL RUSTICATION BEHIND SLOPE PAVING WITH POLYSTYRENE PRIOR TO CONSTRUCTION OF SLOPE PAVING.

NOTES

1. WELDED WIRE FABRIC SHALL CONFORM TO AASHTO SPECIFICATION M55.
2. SLOPE PAVING SHALL BE POURED IN 10 FT. TRANSVERSE SECTIONS WITH A TOOLED CONSTRUCTION JOINT AT EACH SECTION, EXCEPT AS NOTED.
3. WELDED WIRE FABRIC SHALL BE 2" FROM THE END OF JOINTS AND SHALL LAP 8" AT SPLICES.
4. WHERE SLOPE OR BERM PAVING BUTTS AGAINST STRUCTURAL CONCRETE, SEPARATE WITH 1" EXPANSION JOINT MATERIAL, EXCEPT AT ABUTMENT FACE.
5. EXPANSION JOINT MATERIAL AND WELDED WIRE FABRIC SHALL NOT BE PAID FOR SEPARATELY, BUT SHALL BE INCLUDED IN THE WORK.
6. STRUCTURE EXCAVATION FOR CONCRETE SLOPE AND DITCH PAVING SHALL BE LIMITED TO THE ACTUAL VOLUME OCCUPIED BY THE SLOPE PAVING CONCRETE.
7. CONCRETE SLOPE PAVING SHALL HAVE A SMOOTH FINISH. CONCRETE SHALL RECEIVE PIGMENTED STAIN COATING. THE COLOR SHALL BE LIGHT BROWN TO MATCH FEDERAL COLOR 30313 FROM THE FEDERAL STANDARD 595B COLORS. CONTROL JOINTS SHALL BE SAW-CUT.
8. FOR DETAILS OF DECK DRAIN COMPONENTS PASSING THROUGH SLOPE PAVING, SEE DWG. NO. B34.

PRELIMINARY
SUBJECT TO REVISION

Revision Dates (Preliminary Stage Only)

Quantities	INITIAL	DATE
Quantities By		
Checked By		

Detail	INITIAL	DATE
Detailed By	ERS	02/06
Checked By		

Design	INITIAL	DATE
Designed By	SA	02/06
Checked By		

s:\tranproj\246177-00\hwydes\plans\brsv01.dgn
12:52:32 PM
5/30/2006

Computer File Information		
Creation Date: 02/25/06	Initials: ERS	
Last Modification Date: 04/11/06	Initials: ERS	
Full Path: S:\Tranproj\ 246177-00\HwyDes\Plans\		
Drawing File Name: brsv01.dgn		
CAD Ver. MicroStation J	Scale: NONE	Units: ENGLISH

Sheet Revisions

DOUGLAS COUNTY
Department of Public Works
100 Third Street
Castle Rock, CO 80104
Phone: (303) 660-7490
FAX: (303) 688-9343

PBSJ
4601 DTC Blvd.
Suite 700
Denver, CO 80237
Phone: 303/221-7275
Fax: 303/221-7276

As Constructed
No Revisions:
Revised:
Void:

QUEBEC OVER C470
SLOPE PAVING

Designer:	S. Abraham	Structure Numbers	F-17-HJ
Detailer:	E. Schawo		F-17-QT
Sheet Subset:	BRIDGE	Subset Sheets: B35 of	

Project No./Code
C.I. 03-013

Sheet Number 68

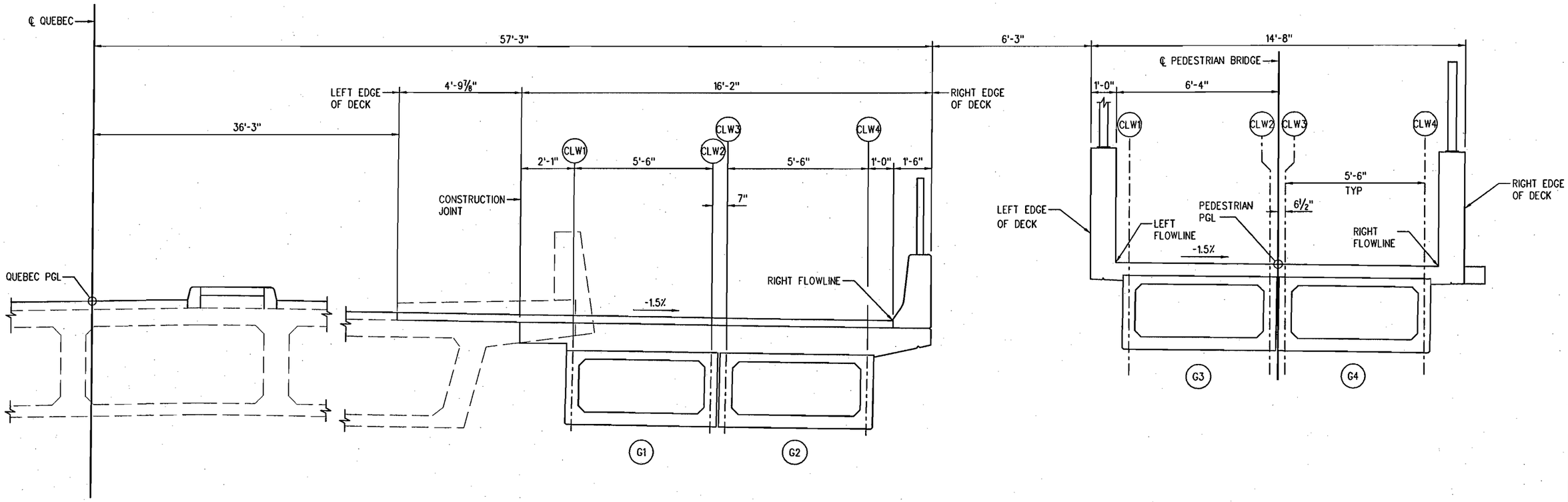

DECK ELEVATION DIAGRAM

(LOOKING AHEAD STATION)

PRELIMINARY
SUBJECT TO REVISION

Design			
	INITIAL	DATE	
Designed By	SA	8/05	Detailed By
Checked By			Checked By

Detail			
	INITIAL	DATE	
Detailed By	ERS	3/06	Quantities By
Checked By			Checked By

Quantities		
	INITIAL	DATE
Quantities By		
Checked By		

Revision Dates (Preliminary Stage Only)

12:52:36 PM s:\tranproj\246177-00\hwydes\plans\brde01.dgn 5/30/2006

Computer File Information	
Creation Date: 03/14/06	Initials: ERS
Last Modification Date: 03/14/06	Initials: ERS
Full Path: S:\Tranproj\ 246177-00\HwyDes\Plans\	
Drawing File Name: brde01.dgn	
CAD Ver. MicroStation V8 Scale: 1"=4'-0"	Units: ENGLISH

Sheet Revisions

DOUGLAS COUNTY
Department of Public Works
100 Third Street
Castle Rock, CO 80104
Phone: (303) 660-7490
FAX: (303) 688-9343

PBSJ
4601 DTC Blvd.
Suite 700
Denver, CO 80237
Phone: 303/221-7275
Fax: 303/221-7276

As Constructed
No Revisions:
Revised:
Void:

QUEBEC OVER C470
DECK ELEVATION DIAGRAM

Designer:	S. Abraham	Structure Numbers	F-17-HJ
Detailer:	E. Schawo		F-17-QT
Sheet Subset:	BRIDGE	Subset Sheets: B36 of 41	

Project No./Code
C.I. 03-013

Sheet Number 69

State of Colorado
Department of Transportation
Staff Bridge Design
Bridge Geometry Project Coordinate Converter
Version 1.00

Run date & time = Fri Apr 28 11:28:04 2006

Input Northing Offset = 1630725.619900
Input Easting Offset = 3167967.780300
Input Bearing = N 0 2 2.0000 W

DESCRIPTION

Units: feet;
Project: 246177.00; Subaccount: ;
Designer: SA; Detailer: ERS;
Location: Douglas County;
Quebec Street Widening over C-470

HORIZONTAL ALIGNMENT DATA

HORIZONTAL TANGENT

VERTICAL ALIGNMENT DATA

ELEVATION AT PI	ELEVATION AT GRADE		STATION		ELEVATION AT GRADE	ELEVATION AT PI	PERCENT GRADE
							-1.000000
5788.1800	5788.1800	PI	119+00.0000				
							-1.000000
			128+00.0000	PI	5779.1800	5779.1800	
							-1.000000

TABLE OF ROADWAY CROSS-SLOPES (SUPERELEVATION: E= -NC-)

STATION	SLOPE LEFT	SLOPE RIGHT	VC LENGTH
(ON TANGENT)	0.0200	-0.0200	50.00 (MAX)

OFFSET PROFILE CONTROL TO PIVOT POINT = 0.0000 FEET

LIMITS OF VALID ELEVATION AND CROSS-SLOPE DATA — BEGIN: * UNLIMITED * — END: * UNLIMITED *

LAYOUT LINE DATA

LAYOUT LINE DEFINED TO BE COINCIDENT WITH HORIZONTAL CONTROL

	HCL STA	OFFSET	X	Y
LAYOUT LINE INTERSECTS REF LINE AT	122+00.0000	0.00000000	0.0000	0.0000

DEAD LOAD DEFLECTION DATA

DEFLECTIONS AT TENTH POINTS FROM FITTED CURVE

FOR BENT LINE: CL BRG A1 — 07 CARD(S): 1 — GIRDER LINES REFERENCED BY: A

	0.0	0.1	0.2	0.3	0.4	0.5	0.6	0.7	0.8	0.9	1.0		
													A4= 0.00000
INCH	0.0000	0.6555	1.2433	1.6990	1.9783	2.0569	1.9308	1.6158	1.1482	0.5842	0.0000	INCH	A3= 0.00000
FOOT	0.0000	0.0546	0.1036	0.1416	0.1649	0.1714	0.1609	0.1347	0.0957	0.0487	0.0000	FOOT	A2= 8.38031
													A1=-7.39000
SLOPE	0.552316										-0.469790	SLOPE	A0=-6.62779

FOR BENT LINE: CL BRG A1 — 07 CARD(S): 1 — GIRDER LINES REFERENCED BY: B

	0.0	0.1	0.2	0.3	0.4	0.5	0.6	0.7	0.8	0.9	1.0		
													A4= 0.00000
INCH	0.0000	0.8146	1.5463	2.1155	2.4671	2.5706	2.4197	2.0324	1.4514	0.7434	0.0000	INCH	A3= 0.00000
FOOT	0.0000	0.0679	0.1289	0.1763	0.2056	0.2142	0.2016	0.1694	0.1209	0.0620	0.0000	FOOT	A2= 10.1653
													A1=-9.17653
SLOPE	0.686295										-0.603897	SLOPE	A0=-8.23554

DEAD LOAD DEFLECTION DATA (CONT)

DEFLECTIONS AT TENTH POINTS FROM FITTED CURVE

FOR BENT LINE: AH BRG P2 — 07 CARD(S): 1 — GIRDER LINES REFERENCED BY: A

	0.0	0.1	0.2	0.3	0.4	0.5	0.6	0.7	0.8	0.9	1.0		
													A4= 0.00000
INCH	0.0000	0.5842	1.1482	1.6158	1.9308	2.0569	1.9783	1.6990	1.2433	0.6555	0.0000	INCH	A3= 0.00000
FOOT	0.0000	0.0487	0.0957	0.1347	0.1609	0.1714	0.1649	0.1416	0.1036	0.0546	0.0000	FOOT	A2= 8.38031
													A1=-9.37062
SLOPE	0.469790										-0.552316	SLOPE	A0=-5.63748

FOR BENT LINE: AH BRG P2 — 07 CARD(S): 1 — GIRDER LINES REFERENCED BY: B

	0.0	0.1	0.2	0.3	0.4	0.5	0.6	0.7	0.8	0.9	1.0		
													A4= 0.00000
INCH	0.0000	0.7434	1.4514	2.0324	2.4197	2.5706	2.4671	2.1155	1.5463	0.8146	0.0000	INCH	A3= 0.00000
FOOT	0.0000	0.0620	0.1209	0.1694	0.2016	0.2142	0.2056	0.1763	0.1289	0.0679	0.0000	FOOT	A2= 10.1653
													A1=-11.1541
SLOPE	0.603897										-0.686295	SLOPE	A0=-7.24677

* HORIZONTAL CONTROL LINE * — AT FINISHED GRADE

BENT LINE DESCRIPTION	INTERSECTION POINT STATION	OFFSET	ELEVATION		FROM LAYOUT LINE OFFSET X	ORDINATE Y	PROJECT COORDINATES NORTHING	EASTING	BENT LINE LENGTH FROM Y-AXIS	SKEW D M S	GIRDER LINE LENGTH FROM REF LINE	ROADWAY CROSS-SLOPE
REF LINE	122+00.0000	0.0000	5785.1800		0.0000	0.0000	1630725.6199	3167967.7803	0.0000	0 00 00.00	0.0000	+/-.020000
BF ABUT 1	122+03.0700	0.0000	5785.1493	( )	0.0000	3.0700	1630728.6899	3167967.7785	0.0000	-0 28 00.00	3.0700	+/-.020000
CL BRG A1	122+04.3200	0.0000	5785.1368	(10)	0.0000	4.3200	1630729.9399	3167967.7777	0.0000	-0 28 00.00	4.3200	+/-.020000
BK BRG P2	123+07.9033	0.0000	5784.1010	(1)	0.0000	107.9033	1630833.5232	3167967.7165	0.0000	-0 28 00.00	107.9033	+/-.020000
CL PIER 2	123+08.8200	0.0000	5784.0918	( )	0.0000	108.8200	1630834.4399	3167967.7159	0.0000	-0 28 00.00	108.8200	+/-.020000
AH BRG P2	123+09.7367	0.0000	5784.0826	(10)	0.0000	109.7367	1630835.3566	3167967.7154	0.0000	-0 28 00.00	109.7367	+/-.020000
CL BRG A3	124+13.3200	0.0000	5783.0468	(1)	0.0000	213.3200	1630938.9399	3167967.6541	0.0000	-0 28 00.00	213.3200	+/-.020000
BF ABUT 3	124+14.5700	0.0000	5783.0343	(0.0)	0.0000	214.5700	1630940.1899	3167967.6534	0.0000	-0 28 00.00	214.5700	+/-.020000

QUEBEC PGL — PARALLEL TO HORIZONTAL CONTROL — AT FINISHED GRADE

BENT LINE	STATION	OFFSET	ELEVATION	ELEV+DL	X	Y	NORTHING	EASTING	BENT LNTH	SKEW	GIRDER LNTH	CRS-SLP
REF LINE	122+00.0000	0.0000	5785.1800		0.0000	0.0000	1630725.6199	3167967.7803	0.0000	0 00 00.00	0.0000	+/-.020000
BF ABUT 1	122+03.0700	0.0000	5785.1493		0.0000	3.0700	1630728.6899	3167967.7785	0.0000	-0 28 00.00	3.0700	+/-.020000
CL BRG A1	122+04.3200	0.0000	5785.1368		0.0000	4.3200	1630729.9399	3167967.7777	0.0000	-0 28 00.00	4.3200	+/-.020000
F-1	122+14.6783	0.0000	5785.0332		0.0000	14.6783	1630740.2982	3167967.7716			14.6783	+/-.020000
F-2	122+25.0367	0.0000	5784.9296		0.0000	25.0367	1630750.6566	3167967.7655			25.0367	+/-.020000
F-3	122+35.3950	0.0000	5784.8261		0.0000	35.3950	1630761.0149	3167967.7594			35.3950	+/-.020000
F-4	122+45.7533	0.0000	5784.7225		0.0000	45.7533	1630771.3732	3167967.7532			45.7533	+/-.020000
F-5	122+56.1117	0.0000	5784.6189		0.0000	56.1117	1630781.7316	3167967.7471			56.1117	+/-.020000
F-6	122+66.4700	0.0000	5784.5153		0.0000	66.4700	1630792.0899	3167967.7410			66.4700	+/-.020000
F-7	122+76.8283	0.0000	5784.4117		0.0000	76.8283	1630802.4482	3167967.7349			76.8283	+/-.020000
F-8	122+87.1866	0.0000	5784.3081		0.0000	87.1866	1630812.8065	3167967.7287			87.1866	+/-.020000
F-9	122+97.5450	0.0000	5784.2046		0.0000	97.5450	1630823.1649	3167967.7226			97.5450	+/-.020000
BK BRG P2	123+07.9033	0.0000	5784.1010		0.0000	107.9033	1630833.5232	3167967.7165	0.0000	-0 28 00.00	107.9033	+/-.020000
CL PIER 2	123+08.8200	0.0000	5784.0918		0.0000	108.8200	1630834.4399	3167967.7159	0.0000	-0 28 00.00	108.8200	+/-.020000
AH BRG P2	123+09.7367	0.0000	5784.0826		0.0000	109.7367	1630835.3566	3167967.7154	0.0000	-0 28 00.00	109.7367	+/-.020000
F-1	123+20.0950	0.0000	5783.9790		0.0000	120.0950	1630845.7149	3167967.7093			120.0950	+/-.020000
F-2	123+30.4534	0.0000	5783.8755		0.0000	130.4534	1630856.0733	3167967.7031			130.4534	+/-.020000
F-3	123+40.8117	0.0000	5783.7719		0.0000	140.8117	1630866.4316	3167967.6970			140.8117	+/-.020000
F-4	123+51.1700	0.0000	5783.6683		0.0000	151.1700	1630876.7899	3167967.6909			151.1700	+/-.020000
F-5	123+61.5284	0.0000	5783.5647		0.0000	161.5283	1630887.1482	3167967.6848			161.5283	+/-.020000
F-6	123+71.8867	0.0000	5783.4611		0.0000	171.8867	1630897.5066	3167967.6786			171.8867	+/-.020000
F-7	123+82.2450	0.0000	5783.3575		0.0000	182.2450	1630907.8649	3167967.6725			182.2450	+/-.020000
F-8	123+92.6033	0.0000	5783.2540		0.0000	192.6033	1630918.2232	3167967.6664			192.6033	+/-.020000
F-9	124+02.9617	0.0000	5783.1504		0.0000	202.9617	1630928.5816	3167967.6603			202.9617	+/-.020000
CL BRG A3	124+13.3200	0.0000	5783.0468		0.0000	213.3200	1630938.9399	3167967.6541	0.0000	-0 28 00.00	213.3200	+/-.020000
BF ABUT 3	124+14.5700	0.0000	5783.0343		0.0000	214.5700	1630940.1899	3167967.6534	0.0000	-0 28 00.00	214.5700	+/-.020000

LEFT EDGE OF DECK — PARALLEL TO HORIZONTAL CONTROL — 0.347500 FEET BELOW FINISHED GRADE

BENT LINE	STATION	OFFSET	ELEVATION	ELEV+DL	X	Y	NORTHING	EASTING	BENT LNTH	SKEW	GIRDER LNTH	CRS-SLP
REF LINE	122+00.0000	36.2500	5784.1075		36.2500	0.0000	1630725.6413	3168004.0303	36.2500	0 00 00.00	0.0000	-0.020000
BF ABUT 1	122+03.3653	36.2500	5784.0738		36.2500	3.3653	1630729.0066	3168004.0283	36.2512	-0 28 00.00	3.3653	-0.020000
CL BRG A1	122+04.6153	36.2500	5784.0613		36.2500	4.6153	1630730.2566	3168004.0276	36.2512	-0 28 00.00	4.6153	-0.020000
F-1	122+14.9736	36.2500	5783.9578		36.2500	14.9736	1630740.6149	3168004.0214			14.9736	-0.020000
F-2	122+25.3319	36.2500	5783.8542		36.2500	25.3319	1630750.9732	3168004.0153			25.3319	-0.020000
F-3	122+35.6902	36.2500	5783.7506		36.2500	35.6902	1630761.3315	3168004.0092			35.6902	-0.020000
F-4	122+46.0486	36.2500	5783.6470		36.2500	46.0486	1630771.6899	3168004.0031			46.0486	-0.020000
F-5	122+56.4069	36.2500	5783.5434		36.2500	56.4069	1630782.0482	3168003.9969			56.4069	-0.020000
F-6	122+66.7652	36.2500	5783.4398		36.2500	66.7652	1630792.4065	3168003.9908			66.7652	-0.020000
F-7	122+77.1236	36.2500	5783.3363		36.2500	77.1236	1630802.7649	3168003.9847			77.1236	-0.020000
F-8	122+87.4819	36.2500	5783.2327		36.2500	87.4819	1630813.1232	3168003.9786			87.4819	-0.020000
F-9	122+97.8402	36.2500	5783.1291		36.2500	97.8402	1630823.4815	3168003.9724			97.8402	-0.020000
BK BRG P2	123+08.1986	36.2500	5783.0255		36.2500	108.1986	1630833.8399	3168003.9663	36.2512	-0 28 00.00	108.1986	-0.020000
CL PIER 2	123+09.1153	36.2500	5783.0163		36.2500	109.1153	1630834.7566	3168003.9658	36.2512	-0 28 00.00	109.1153	-0.020000
AH BRG P2	123+10.0320	36.2500	5783.0072		36.2500	110.0320	1630835.6733	3168003.9652	36.2512	-0 28 00.00	110.0320	-0.020000
F-1	123+20.3903	36.2500	5782.9036		36.2500	120.3903	1630846.0316	3168003.9591			120.3903	-0.020000
F-2	123+30.7486	36.2500	5782.8000		36.2500	130.7486	1630856.3899	3168003.9530			130.7486	-0.020000
F-3	123+41.1069	36.2500	5782.6964		36.2500	141.1069	1630866.7482	3168003.9468			141.1069	-0.020000
F-4	123+51.4653	36.2500	5782.5928		36.2500	151.4653	1630877.1066	3168003.9407			151.4653	-0.020000
F-5	123+61.8236	36.2500	5782.4893		36.2500	161.8236	1630887.4649	3168003.9346			161.8236	-0.020000
F-6	123+72.1819	36.2500	5782.3857		36.2500	172.1819	1630897.8232	3168003.9285			172.1819	-0.020000
F-7	123+82.5403	36.2500	5782.2821		36.2500	182.5403	1630908.1816	3168003.9223			182.5403	-0.020000
F-8	123+92.8986	36.2500	5782.1785		36.2500	192.8986	1630918.5399	3168003.9162			192.8986	-0.020000
F-9	124+03.2569	36.2500	5782.0749		36.2500	203.2569	1630928.8982	3168003.9101			203.2569	-0.020000
CL BRG A3	124+13.6153	36.2500	5781.9713		36.2500	213.6153	1630939.2566	3168003.9039	36.2512	-0 28 00.00	213.6153	-0.020000
BF ABUT 3	124+14.8653	36.2500	5781.9588		36.2500	214.8653	1630940.5066	3168003.9032	36.2512	-0 28 00.00	214.8653	-0.020000

CONSTRUCTION JT — PARALLEL TO HORIZONTAL CONTROL — 0.332500 FEET BELOW FINISHED GRADE

BENT LINE	STATION	OFFSET	ELEVATION	ELEV+DL	X	Y	NORTHING	EASTING	BENT LNTH	SKEW	GIRDER LNTH	CRS-SLP
REF LINE	122+00.0000	39.2500	5784.0625		39.2500	0.0000	1630725.6431	3168007.0303	39.2500	0 00 00.00	0.0000	-0.020000
BF ABUT 1	122+03.3897	39.2500	5784.0286		39.2500	3.3897	1630729.0328	3168007.0283	39.2513	-0 28 00.00	3.3897	-0.020000
CL BRG A1	122+04.6397	39.2500	5784.0161		39.2500	4.6397	1630730.2828	3168007.0275	39.2513	-0 28 00.00	4.6397	-0.020000
F-1	122+14.9980	39.2500	5783.9125		39.2500	14.9980	1630740.6411	3168007.0214			14.9980	-0.020000
F-2	122+25.3564	39.2500	5783.8089		39.2500	25.3564	1630750.9995	3168007.0153			25.3564	-0.020000
F-3	122+35.7147	39.2500	5783.7054		39.2500	35.7147	1630761.3578	3168007.0092			35.7147	-0.020000
F-4	122+46.0730	39.2500	5783.6018		39.2500	46.0730	1630771.7161	3168007.0030			46.0730	-0.020000
F-5	122+56.4313	39.2500	5783.4982		39.2500	56.4313	1630782.0744	3168006.9969			56.4313	-0.020000
F-6	122+66.7897	39.2500	5783.3946		39.2500	66.7897	1630792.4328	3168006.9908			66.7897	-0.020000
F-7	122+77.1480	39.2500	5783.2910		39.2500	77.1480	1630802.7911	3168006.9847			77.1480	-0.020000
F-8	122+87.5063	39.2500	5783.1874		39.2500	87.5063	1630813.1494	3168006.9785			87.5063	-0.020000
F-9	122+97.8647	39.2500	5783.0839		39.2500	97.8647	1630823.5078	3168006.9724			97.8647	-0.020000
BK BRG P2	123+08.2230	39.2500	5782.9803		39.2500	108.2230	1630833.8661	3168006.9663	39.2513	-0 28 00.00	108.2230	-0.020000
CL PIER 2	123+09.1397	39.2500	5782.9711		39.2500	109.1397	1630834.7828	3168006.9657	39.2513	-0 28 00.00	109.1397	-0.020000
AH BRG P2	123+10.0564	39.2500	5782.9619		39.2500	110.0564	1630835.6995	3168006.9652	39.2513	-0 28 00.00	110.0564	-0.020000
F-1	123+20.4147	39.2500	5782.8584		39.2500	120.4147	1630846.0578	3168006.9591			120.4147	-0.020000
F-2	123+30.7731	39.2500	5782.7548		39.2500	130.7731	1630856.4162	3168006.9529			130.7731	-0.020000
F-3	123+41.1314	39.2500	5782.6512		39.2500	141.1314	1630866.7745	3168006.9468			141.1314	-0.020000
F-4	123+51.4897	39.2500	5782.5476		39.2500	151.4897	1630877.1328	3168006.9407			151.4897	-0.020000
F-5	123+61.8480	39.2500	5782.4440		39.2500	161.8480	1630887.4911	3168006.9346			161.8480	-0.020000
F-6	123+72.2064	39.2500	5782.3404		39.2500	172.2064	1630897.8495	3168006.9284			172.2064	-0.020000
F-7	123+82.5647	39.2500	5782.2369		39.2500	182.5647	1630908.2078	3168006.9223			182.5647	-0.020000
F-8	123+92.9230	39.2500	5782.1333		39.2500	192.9230	1630918.5661	3168006.9162			192.9230	-0.020000
F-9	124+03.2814	39.2500	5782.0297		39.2500	203.2814	1630928.9245	3168006.9101			203.2814	-0.020000
CL BRG A3	124+13.6397	39.2500	5781.9261		39.2500	213.6397	1630939.2828	3168006.9039	39.2513	-0 28 00.00	213.6397	-0.020000
BF ABUT 3	124+14.8897	39.2500	5781.9136		39.2500	214.8897	1630940.5328	3168006.9032	39.2513	-0 28 00.00	214.8897	-0.020000

NOTES

1. ELEVATIONS ARE AT TOP OF BRIDGE DECK, A MINIMUM OF 3 INCHES BELOW FINISHED GRADE.
2. POSITIVE ROADWAY CROSS SLOPE IS UPWARDS FROM THE PROFILE GRADE LINE.
3. THESE STATIONS, COORDINATES, OFFSETS, AND LENGTHS DEFINE THE LAYOUT OF THE STRUCTURE IN A TWO DIMENSIONAL HORIZONTAL PLANE. ELEVATIONS DEFINE THE FINAL GRADE OF THE FINSHED CONCRETE DECK. FABRICATION OF STRUCTURAL COMPONENTS THROUGH THE DIRECT USE OF THIS INFORMATION IS NOT INTENDED OR ADVISABLE.

PRELIMINARY
SUBJECT TO REVISION

ABUTMENT JT — PARALLEL TO HORIZONTAL CONTROL — 0.323333 FEET BELOW FINISHED GRADE

BENT LINE	STATION	OFFSET	ELEVATION	ELEV+DL	X	Y	NORTHING	EASTING	BENT LNTH	SKEW	GIRDER LNTH	CRS-SLP
REF LINE	122+00.0000	41.0730	5784.0352		41.0730	0.0000	1630725.6442	3168008.8533	41.0730	0 00 00.00	0.0000	-0.020000
BF ABUT 1	122+03.4045	41.0730	5784.0012		41.0730	3.4045	1630729.0487	3168008.8513	41.0744	-0 28 00.00	3.4045	-0.020000
BF ABUT 3	124+14.9045	41.0730	5781.8862		41.0730	214.9045	1630940.5487	3168008.7262	41.0744	-0 28 00.00	214.9045	-0.020000

CL W1 — PARALLEL TO HORIZONTAL CONTROL — 0.312917 FEET BELOW FINISHED GRADE

BENT LINE	STATION	OFFSET	ELEVATION	ELEV+DL	X	Y	NORTHING	EASTING	BENT LNTH	SKEW	GIRDER LNTH	CRS-SLP
REF LINE	122+00.0000	43.1667	5784.0037		43.1667	0.0000	1630725.6454	3168010.9470	43.1667	0 00 00.00	0.0000	-0.020000
BF ABUT 1	122+03.4216	43.1667	5783.9695		43.1667	3.4216	1630729.0670	3168010.9450	43.1681	-0 28 00.00	3.4216	-0.020000
CL BRG A1	122+04.6716	43.1667	5783.9570	783.9570	43.1667	4.6716	1630730.3170	3168010.9442	43.1681	-0 28 00.00	4.6716	-0.020000
F-1	122+15.0299	43.1667	5783.8535	783.9081	43.1667	15.0299	1630740.6753	3168010.9381			15.0299	-0.020000
F-2	122+25.3883	43.1667	5783.7499	783.8535	43.1667	25.3883	1630751.0337	3168010.9320			25.3883	-0.020000
F-3	122+35.7466	43.1667	5783.6463	783.7879	43.1667	35.7466	1630761.3920	3168010.9258			35.7466	-0.020000
F-4	122+46.1049	43.1667	5783.5427	783.7076	43.1667	46.1049	1630771.7503	3168010.9197			46.1049	-0.020000
F-5	122+56.4632	43.1667	5783.4391	783.6105	43.1667	56.4632	1630782.1086	3168010.9136			56.4632	-0.020000
F-6	122+66.8216	43.1667	5783.3355	783.4964	43.1667	66.8216	1630792.4670	3168010.9075			66.8216	-0.020000
F-7	122+77.1799	43.1667	5783.2320	783.3666	43.1667	77.1799	1630802.8253	3168010.9013			77.1799	-0.020000
F-8	122+87.5382	43.1667	5783.1284	783.2241	43.1667	87.5382	1630813.1836	3168010.8952			87.5382	-0.020000
F-9	122+97.8966	43.1667	5783.0248	783.0735	43.1667	97.8966	1630823.5420	3168010.8891			97.8966	-0.020000
BK BRG P2	123+08.2549	43.1667	5782.9212	782.9212	43.1667	108.2549	1630833.9003	3168010.8830	43.1681	-0 28 00.00	108.2549	-0.020000
CL PIER 2	123+09.1716	43.1667	5782.9120		43.1667	109.1716	1630834.8170	3168010.8824	43.1681	-0 28 00.00	109.1716	-0.020000
AH BRG P2	123+10.0883	43.1667	5782.9029	782.9029	43.1667	110.0883	1630835.7337	3168010.8819	43.1681	-0 28 00.00	110.0883	-0.020000
F-1	123+20.4466	43.1667	5782.7993	782.8480	43.1667	120.4466	1630846.0920	3168010.8758			120.4466	-0.020000
F-2	123+30.8050	43.1667	5782.6957	782.7914	43.1667	130.8050	1630856.4504	3168010.8696			130.8050	-0.020000
F-3	123+41.1633	43.1667	5782.5921	782.7268	43.1667	141.1633	1630866.8087	3168010.8635			141.1633	-0.020000
F-4	123+51.5216	43.1667	5782.4885	782.6494	43.1667	151.5216	1630877.1670	3168010.8574			151.5216	-0.020000
F-5	123+61.8799	43.1667	5782.3849	782.5564	43.1667	161.8799	1630887.5253	3168010.8512			161.8799	-0.020000
F-6	123+72.2383	43.1667	5782.2814	782.4462	43.1667	172.2383	1630897.8837	3168010.8451			172.2383	-0.020000
F-7	123+82.5966	43.1667	5782.1778	782.3194	43.1667	182.5966	1630908.2420	3168010.8390			182.5966	-0.020000
F-8	123+92.9549	43.1667	5782.0742	782.1778	43.1667	192.9549	1630918.6003	3168010.8329			192.9549	-0.020000
F-9	124+03.3133	43.1667	5781.9706	782.0252	43.1667	203.3133	1630928.9587	3168010.8267			203.3133	-0.020000
CL BRG A3	124+13.6716	43.1667	5781.8670	781.8670	43.1667	213.6716	1630939.3170	3168010.8206	43.1681	-0 28 00.00	213.6716	-0.020000
BF ABUT 3	124+14.9216	43.1667	5781.8545		43.1667	214.9216	1630940.5670	3168010.8199	43.1681	-0 28 00.00	214.9216	-0.020000

CL W2 — PARALLEL TO HORIZONTAL CONTROL — 0.285417 FEET BELOW FINISHED GRADE

BENT LINE	STATION	OFFSET	ELEVATION	ELEV+DL	X	Y	NORTHING	EASTING	BENT LNTH	SKEW	GIRDER LNTH	CRS-SLP
REF LINE	122+00.0000	48.6667	5783.9212		48.6667	0.0000	1630725.6487	3168016.4470	48.6667	0 00 00.00	0.0000	-0.020000
BF ABUT 1	122+03.4664	48.6667	5783.8866		48.6667	3.4664	1630729.1151	3168016.4449	48.6683	-0 28 00.00	3.4664	-0.020000
CL BRG A1	122+04.7164	48.6667	5783.8741	783.8741	48.6667	4.7164	1630730.3651	3168016.4442	48.6683	-0 28 00.00	4.7164	-0.020000
F-1	122+15.0747	48.6667	5783.7705	783.8251	48.6667	15.0747	1630740.7234	3168016.4381			15.0747	-0.020000
F-2	122+25.4331	48.6667	5783.6669	783.7705	48.6667	25.4331	1630751.0818	3168016.4319			25.4331	-0.020000
F-3	122+35.7914	48.6667	5783.5633	783.7049	48.6667	35.7914	1630761.4401	3168016.4258			35.7914	-0.020000
F-4	122+46.1497	48.6667	5783.4598	783.6246	48.6667	46.1497	1630771.7984	3168016.4197			46.1497	-0.020000
F-5	122+56.5080	48.6667	5783.3562	783.5276	48.6667	56.5080	1630782.1567	3168016.4136			56.5080	-0.020000
F-6	122+66.8664	48.6667	5783.2526	783.4135	48.6667	66.8664	1630792.5151	3168016.4074			66.8664	-0.020000
F-7	122+77.2247	48.6667	5783.1490	783.2837	48.6667	77.2247	1630802.8734	3168016.4013			77.2247	-0.020000
F-8	122+87.5830	48.6667	5783.0454	783.1411	48.6667	87.5830	1630813.2317	3168016.3952			87.5830	-0.020000
F-9	122+97.9414	48.6667	5782.9418	782.9905	48.6667	97.9414	1630823.5901	3168016.3891			97.9414	-0.020000
BK BRG P2	123+08.2997	48.6667	5782.8383	782.8383	48.6667	108.2997	1630833.9484	3168016.3829	48.6683	-0 28 00.00	108.2997	-0.020000
CL PIER 2	123+09.2164	48.6667	5782.8291		48.6667	109.2164	1630834.8651	3168016.3824	48.6683	-0 28 00.00	109.2164	-0.020000
AH BRG P2	123+10.1331	48.6667	5782.8199	782.8199	48.6667	110.1331	1630835.7818	3168016.3819	48.6683	-0 28 00.00	110.1331	-0.020000
F-1	123+20.4914	48.6667	5782.7163	782.7650	48.6667	120.4914	1630846.1401	3168016.3757			120.4914	-0.020000
F-2	123+30.8498	48.6667	5782.6128	782.7084	48.6667	130.8498	1630856.4985	3168016.3696			130.8498	-0.020000
F-3	123+41.2081	48.6667	5782.5092	782.6438	48.6667	141.2081	1630866.8568	3168016.3635			141.2081	-0.020000
F-4	123+51.5664	48.6667	5782.4056	782.5665	48.6667	151.5664	1630877.2151	3168016.3573			151.5664	-0.020000
F-5	123+61.9247	48.6667	5782.3020	782.4734	48.6667	161.9247	1630887.5734	3168016.3512			161.9247	-0.020000
F-6	123+72.2831	48.6667	5782.1984	782.3633	48.6667	172.2831	1630897.9318	3168016.3451			172.2831	-0.020000
F-7	123+82.6414	48.6667	5782.0948	782.2364	48.6667	182.6414	1630908.2901	3168016.3390			182.6414	-0.020000
F-8	123+92.9997	48.6667	5781.9913	782.0949	48.6667	192.9997	1630918.6484	3168016.3328			192.9997	-0.020000
F-9	124+03.3581	48.6667	5781.8877	781.9423	48.6667	203.3581	1630929.0067	3168016.3267			203.3581	-0.020000
CL BRG A3	124+13.7164	48.6667	5781.7841	781.7841	48.6667	213.7164	1630939.3650	3168016.3206	48.6683	-0 28 00.00	213.7164	-0.020000
BF ABUT 3	124+14.9664	48.6667	5781.7716		48.6667	214.9664	1630940.6150	3168016.3198	48.6683	-0 28 00.00	214.9664	-0.020000

CL W3 — PARALLEL TO HORIZONTAL CONTROL — 0.282500 FEET BELOW FINISHED GRADE

BENT LINE	STATION	OFFSET	ELEVATION	ELEV+DL	X	Y	NORTHING	EASTING	BENT LNTH	SKEW	GIRDER LNTH	CRS-SLP
REF LINE	122+00.0000	49.2500	5783.9125		49.2500	0.0000	1630725.6490	3168017.0303	49.2500	0 00 00.00	0.0000	-0.020000
BF ABUT 1	122+03.4711	49.2500	5783.8778		49.2500	3.4711	1630729.1201	3168017.0282	49.2516	-0 28 00.00	3.4711	-0.020000
CL BRG A1	122+04.7211	49.2500	5783.8653	783.8653	49.2500	4.7211	1630730.3701	3168017.0275	49.2516	-0 28 00.00	4.7211	-0.020000
F-1	122+15.0795	49.2500	5783.7617	783.8296	49.2500	15.0795	1630740.7285	3168017.0214			15.0795	-0.020000
F-2	122+25.4378	49.2500	5783.6581	783.7870	49.2500	25.4378	1630751.0868	3168017.0152			25.4378	-0.020000
F-3	122+35.7961	49.2500	5783.5545	783.7308	49.2500	35.7961	1630761.4451	3168017.0091			35.7961	-0.020000
F-4	122+46.1545	49.2500	5783.4510	783.6565	49.2500	46.1545	1630771.8035	3168017.0030			46.1545	-0.020000
F-5	122+56.5128	49.2500	5783.3474	783.5616	49.2500	56.5128	1630782.1618	3168016.9969			56.5128	-0.020000
F-6	122+66.8711	49.2500	5783.2438	783.4454	49.2500	66.8711	1630792.5201	3168016.9907			66.8711	-0.020000
F-7	122+77.2295	49.2500	5783.1402	783.3096	49.2500	77.2295	1630802.8785	3168016.9846			77.2295	-0.020000
F-8	122+87.5878	49.2500	5783.0366	783.1576	49.2500	87.5878	1630813.2368	3168016.9785			87.5878	-0.020000
F-9	122+97.9461	49.2500	5782.9330	782.9950	49.2500	97.9461	1630823.5951	3168016.9724			97.9461	-0.020000
BK BRG P2	123+08.3044	49.2500	5782.8295	782.8295	49.2500	108.3044	1630833.9534	3168016.9662	49.2516	-0 28 00.00	108.3044	-0.020000
CL PIER 2	123+09.2211	49.2500	5782.8203		49.2500	109.2211	1630834.8701	3168016.9657	49.2516	-0 28 00.00	109.2211	-0.020000
AH BRG P2	123+10.1378	49.2500	5782.8111	782.8111	49.2500	110.1378	1630835.7868	3168016.9651	49.2516	-0 28 00.00	110.1378	-0.020000
F-1	123+20.4962	49.2500	5782.7075	782.7695	49.2500	120.4962	1630846.1452	3168016.9590			120.4962	-0.020000
F-2	123+30.8545	49.2500	5782.6040	782.7249	49.2500	130.8545	1630856.5035	3168016.9529			130.8545	-0.020000
F-3	123+41.2128	49.2500	5782.5004	782.6697	49.2500	141.2128	1630866.8618	3168016.9468			141.2128	-0.020000
F-4	123+51.5712	49.2500	5782.3968	782.5984	49.2500	151.5712	1630877.2202	3168016.9406			151.5712	-0.020000
F-5	123+61.9295	49.2500	5782.2932	782.5074	49.2500	161.9295	1630887.5785	3168016.9345			161.9295	-0.020000
F-6	123+72.2878	49.2500	5782.1896	782.3952	49.2500	172.2878	1630897.9368	3168016.9284			172.2878	-0.020000
F-7	123+82.6462	49.2500	5782.0860	782.2623	49.2500	182.6462	1630908.2952	3168016.9223			182.6462	-0.020000
F-8	123+93.0045	49.2500	5781.9825	782.1113	49.2500	193.0045	1630918.6535	3168016.9161			193.0045	-0.020000
F-9	124+03.3628	49.2500	5781.8789	781.9468	49.2500	203.3628	1630929.0118	3168016.9100			203.3628	-0.020000
CL BRG A3	124+13.7211	49.2500	5781.7753	781.7753	49.2500	213.7211	1630939.3701	3168016.9039	49.2516	-0 28 00.00	213.7211	-0.020000
BF ABUT 3	124+14.9711	49.2500	5781.7628		49.2500	214.9711	1630940.6201	3168016.9031	49.2516	-0 28 00.00	214.9711	-0.020000

CL W4 — PARALLEL TO HORIZONTAL CONTROL — 0.255000 FEET BELOW FINISHED GRADE

BENT LINE	STATION	OFFSET	ELEVATION	ELEV+DL	X	Y	NORTHING	EASTING	BENT LNTH	SKEW	GIRDER LNTH	CRS-SLP
REF LINE	122+00.0000	54.7500	5783.8300		54.7500	0.0000	1630725.6523	3168022.5303	54.7500	0 00 00.00	0.0000	-0.020000
BF ABUT 1	122+03.5159	54.7500	5783.7948		54.7500	3.5159	1630729.1682	3168022.5282	54.7518	-0 28 00.00	3.5159	-0.020000
CL BRG A1	122+04.7659	54.7500	5783.7823	783.7823	54.7500	4.7659	1630730.4182	3168022.5275	54.7518	-0 28 00.00	4.7659	-0.020000
F-1	122+15.1243	54.7500	5783.6788	783.7466	54.7500	15.1243	1630740.7766	3168022.5213			15.1243	-0.020000
F-2	122+25.4826	54.7500	5783.5752	783.7040	54.7500	25.4826	1630751.1349	3168022.5152			25.4826	-0.020000
F-3	122+35.8409	54.7500	5783.4716	783.6479	54.7500	35.8409	1630761.4932	3168022.5091			35.8409	-0.020000
F-4	122+46.1993	54.7500	5783.3680	783.5736	54.7500	46.1993	1630771.8516	3168022.5030			46.1993	-0.020000
F-5	122+56.5576	54.7500	5783.2644	783.4786	54.7500	56.5576	1630782.2099	3168022.4968			56.5576	-0.020000
F-6	122+66.9159	54.7500	5783.1608	783.3625	54.7500	66.9159	1630792.5682	3168022.4907			66.9159	-0.020000
F-7	122+77.2743	54.7500	5783.0573	783.2266	54.7500	77.2743	1630802.9266	3168022.4846			77.2743	-0.020000
F-8	122+87.6326	54.7500	5782.9537	783.0746	54.7500	87.6326	1630813.2849	3168022.4785			87.6326	-0.020000
F-9	122+97.9909	54.7500	5782.8501	782.9120	54.7500	97.9909	1630823.6432	3168022.4723			97.9909	-0.020000
BK BRG P2	123+08.3492	54.7500	5782.7465	782.7465	54.7500	108.3492	1630834.0015	3168022.4662	54.7518	-0 28 00.00	108.3492	-0.020000
CL PIER 2	123+09.2659	54.7500	5782.7373		54.7500	109.2659	1630834.9182	3168022.4657	54.7518	-0 28 00.00	109.2659	-0.020000
AH BRG P2	123+10.1826	54.7500	5782.7282	782.7282	54.7500	110.1826	1630835.8349	3168022.4651	54.7518	-0 28 00.00	110.1826	-0.020000
F-1	123+20.5410	54.7500	5782.6246	782.6865	54.7500	120.5410	1630846.1933	3168022.4590			120.5410	-0.020000
F-2	123+30.8993	54.7500	5782.5210	782.6420	54.7500	130.8993	1630856.5516	3168022.4529			130.8993	-0.020000
F-3	123+41.2576	54.7500	5782.4174	782.5868	54.7500	141.2576	1630866.9099	3168022.4467			141.2576	-0.020000
F-4	123+51.6160	54.7500	5782.3138	782.5155	54.7500	151.6160	1630877.2683	3168022.4406			151.6160	-0.020000
F-5	123+61.9743	54.7500	5782.2103	782.4245	54.7500	161.9743	1630887.6266	3168022.4345			161.9743	-0.020000
F-6	123+72.3326	54.7500	5782.1067	782.3123	54.7500	172.3326	1630897.9849	3168022.4284			172.3326	-0.020000
F-7	123+82.6910	54.7500	5782.0031	782.1794	54.7500	182.6910	1630908.3433	3168022.4222			182.6910	-0.020000
F-8	123+93.0493	54.7500	5781.8995	782.0284	54.7500	193.0493	1630918.7015	3168022.4161			193.0493	-0.020000
F-9	124+03.4076	54.7500	5781.7959	781.8638	54.7500	203.4076	1630929.0598	3168022.4100			203.4076	-0.020000
CL BRG A3	124+13.7659	54.7500	5781.6923	781.6923	54.7500	213.7659	1630939.4181	3168022.4039	54.7518	-0 28 00.00	213.7659	-0.020000
BF ABUT 3	124+15.0159	54.7500	5781.6798		54.7500	215.0159	1630940.6681	3168022.4031	54.7518	-0 28 00.00	215.0159	-0.020000

RIGHT FLOWLINE — PARALLEL TO HORIZONTAL CONTROL — 0.250000 FEET BELOW FINISHED GRADE

BENT LINE	STATION	OFFSET	ELEVATION	ELEV+DL	X	Y	NORTHING	EASTING	BENT LNTH	SKEW	GIRDER LNTH	CRS-SLP
REF LINE	122+00.0000	55.7500	5783.8150		55.7500	0.0000	1630725.6529	3168023.5303	55.7500	0 00 00.00	0.0000	-0.020000
BF ABUT 1	122+03.5241	55.7500	5783.7798		55.7500	3.5241	1630729.1770	3168023.5282	55.7518	-0 28 00.00	3.5241	-0.020000
CL BRG A1	122+04.7741	55.7500	5783.7673		55.7500	4.7741	1630730.4270	3168023.5275	55.7518	-0 28 00.00	4.7741	-0.020000
F-1	122+15.1324	55.7500	5783.6637		55.7500	15.1324	1630740.7853	3168023.5213			15.1324	-0.020000
F-2	122+25.4907	55.7500	5783.5601		55.7500	25.4907	1630751.1436	3168023.5152			25.4907	-0.020000
F-3	122+35.8491	55.7500	5783.4565		55.7500	35.8491	1630761.5020	3168023.5091			35.8491	-0.020000
F-4	122+46.2074	55.7500	5783.3529		55.7500	46.2074	1630771.8603	3168023.5030			46.2074	-0.020000
F-5	122+56.5657	55.7500	5783.2493		55.7500	56.5657	1630782.2186	3168023.4968			56.5657	-0.020000
F-6	122+66.9241	55.7500	5783.1458		55.7500	66.9241	1630792.5770	3168023.4907			66.9241	-0.020000
F-7	122+77.2824	55.7500	5783.0422		55.7500	77.2824	1630802.9353	3168023.4846			77.2824	-0.020000
F-8	122+87.6407	55.7500	5782.9386		55.7500	87.6407	1630813.2936	3168023.4785			87.6407	-0.020000
F-9	122+97.9991	55.7500	5782.8350		55.7500	97.9991	1630823.6520	3168023.4723			97.9991	-0.020000
BK BRG P2	123+08.3574	55.7500	5782.7314		55.7500	108.3574	1630834.0103	3168023.4662	55.7518	-0 28 00.00	108.3574	-0.020000
CL PIER 2	123+09.2741	55.7500	5782.7223		55.7500	109.2741	1630834.9270	3168023.4657	55.7518	-0 28 00.00	109.2741	-0.020000
AH BRG P2	123+10.1908	55.7500	5782.7131		55.7500	110.1908	1630835.8437	3168023.4651	55.7518	-0 28 00.00	110.1908	-0.020000
F-1	123+20.5491	55.7500	5782.6095		55.7500	120.5491	1630846.2020	3168023.4590			120.5491	-0.020000
F-2	123+30.9074	55.7500	5782.5059		55.7500	130.9074	1630856.5603	3168023.4529			130.9074	-0.020000
F-3	123+41.2658	55.7500	5782.4023		55.7500	141.2658	1630866.9186	3168023.4467			141.2658	-0.020000
F-4	123+51.6241	55.7500	5782.2988		55.7500	151.6241	1630877.2769	3168023.4406			151.6241	-0.020000
F-5	123+61.9824	55.7500	5782.1952		55.7500	161.9824	1630887.6352	3168023.4345			161.9824	-0.020000
F-6	123+72.3408	55.7500	5782.0916		55.7500	172.3408	1630897.9936	3168023.4284			172.3408	-0.020000
F-7	123+82.6991	55.7500	5781.9880		55.7500	182.6991	1630908.3519	3168023.4222			182.6991	-0.020000
F-8	123+93.0574	55.7500	5781.8844		55.7500	193.0574	1630918.7102	3168023.4161			193.0574	-0.020000
F-9	124+03.4158	55.7500	5781.7808		55.7500	203.4158	1630929.0686	3168023.4100			203.4158	-0.020000
CL BRG A3	124+13.7741	55.7500	5781.6773		55.7500	213.7741	1630939.4269	3168023.4038	55.7518	-0 28 00.00	213.7741	-0.020000
BF ABUT 3	124+15.0241	55.7500	5781.6648		55.7500	215.0241	1630940.6769	3168023.4031	55.7518	-0 28 00.00	215.0241	-0.020000

RIGHT EDGE OF DECK — PARALLEL TO HORIZONTAL CONTROL — 0.250000 FEET BELOW FINISHED GRADE

BENT LINE	STATION	OFFSET	ELEVATION	ELEV+DL	X	Y	NORTHING	EASTING	BENT LNTH	SKEW	GIRDER LNTH	CRS-SLP
REF LINE	122+00.0000	57.2500	5783.7850		57.2500	0.0000	1630725.6538	3168025.0303	57.2500	0 00 00.00	0.0000	-0.020000
BF ABUT 1	122+03.5363	57.2500	5783.7496		57.2500	3.5363	1630729.1901	3168025.0282	57.2519	-0 28 00.00	3.5363	-0.020000
CL BRG A1	122+04.7863	57.2500	5783.7371		57.2500	4.7863	1630730.4401	3168025.0275	57.2519	-0 28 00.00	4.7863	-0.020000
F-1	122+15.1446	57.2500	5783.6336		57.2500	15.1446	1630740.7984	3168025.0213			15.1446	-0.020000
F-2	122+25.5030	57.2500	5783.5300		57.2500	25.5030	1630751.1568	3168025.0152			25.5030	-0.020000
F-3	122+35.8613	57.2500	5783.4264		57.2500	35.8613	1630761.5151	3168025.0091			35.8613	-0.020000
F-4	122+46.2196	57.2500	5783.3228		57.2500	46.2196	1630771.8734	3168025.0030			46.2196	-0.020000
F-5	122+56.5780	57.2500	5783.2192		57.2500	56.5780	1630782.2318	3168024.9968			56.5780	-0.020000
F-6	122+66.9363	57.2500	5783.1156		57.2500	66.9363	1630792.5901	3168024.9907			66.9363	-0.020000
F-7	122+77.2946	57.2500	5783.0121		57.2500	77.2946	1630802.9483	3168024.9846			77.2946	-0.020000
F-8	122+87.6529	57.2500	5782.9085		57.2500	87.6529	1630813.3066	3168024.9784			87.6529	-0.020000
F-9	122+98.0113	57.2500	5782.8049		57.2500	98.0113	1630823.6650	3168024.9723			98.0113	-0.020000
BK BRG P2	123+08.3696	57.2500	5782.7013		57.2500	108.3696	1630834.0233	3168024.9662	57.2519	-0 28 00.00	108.3696	-0.020000
CL PIER 2	123+09.2863	57.2500	5782.6921		57.2500	109.2863	1630834.9400	3168024.9657	57.2519	-0 28 00.00	109.2863	-0.020000
AH BRG P2	123+10.2030	57.2500	5782.6830		57.2500	110.2030	1630835.8567	3168024.9651	57.2519	-0 28 00.00	110.2030	-0.020000
F-1	123+20.5613	57.2500	5782.5794		57.2500	120.5613	1630846.2150	3168024.9590			120.5613	-0.020000
F-2	123+30.9197	57.2500	5782.4758		57.2500	130.9197	1630856.5734	3168024.9529			130.9197	-0.020000
F-3	123+41.2780	57.2500	5782.3722		57.2500	141.2780	1630866.9317	3168024.9467			141.2780	-0.020000
F-4	123+51.6363	57.2500	5782.2686		57.2500	151.6363	1630877.2900	3168024.9406			151.6363	-0.020000
F-5	123+61.9947	57.2500	5782.1651		57.2500	161.9947	1630887.6484	3168024.9345			161.9947	-0.020000
F-6	123+72.3530	57.2500	5782.0615		57.2500	172.3530	1630898.0067	3168024.9283			172.3530	-0.020000
F-7	123+82.7113	57.2500	5781.9579		57.2500	182.7113	1630908.3650	3168024.9222			182.7113	-0.020000
F-8	123+93.0696	57.2500	5781.8543		57.2500	193.0696	1630918.7233	3168024.9161			193.0696	-0.020000
F-9	124+03.4280	57.2500	5781.7507		57.2500	203.4280	1630929.0817	3168024.9100			203.4280	-0.020000
CL BRG A3	124+13.7863	57.2500	5781.6471		57.2500	213.7863	1630939.4400	3168024.9038	57.2519	-0 28 00.00	213.7863	-0.020000
BF ABUT 3	124+15.0363	57.2500	5781.6346		57.2500	215.0363	1630940.6900	3168024.9031	57.2519	-0 28 00.00	215.0363	-0.020000

NOTES

1. ELEVATIONS ARE AT TOP OF BRIDGE DECK, A MINIMUM OF 3 INCHES BELOW FINISHED GRADE.
2. POSITIVE ROADWAY CROSS SLOPE IS UPWARDS FROM THE PROFILE GRADE LINE.
3. THESE STATIONS, COORDINATES, OFFSETS, AND LENGTHS DEFINE THE LAYOUT OF THE STRUCTURE IN A TWO DIMENSIONAL HORIZONTAL PLANE. ELEVATIONS DEFINE THE FINAL GRADE OF THE FINSHED CONCRETE DECK. FABRICATION OF STRUCTURAL COMPONENTS THROUGH THE DIRECT USE OF THIS INFORMATION IS NOT INTENDED OR ADVISABLE.

PRELIMINARY
SUBJECT TO REVISION

s:\tranproj\246177-00\HwyDes\Plans\brde03.dgn 12:52:54 PM 5/30/2006

Computer File Information
Creation Date: 02/03/06 Initials: ERS
Last Modification Date: 03/29/06 Initials: ERS
Full Path: S:\Tranproj\ 246177-00\HwyDes\Plans\
Drawing File Name: brde02.dgn
CAD Ver. MicroStation V8 Scale: NONE Units: ENGLISH

Sheet Revisions

DOUGLAS COUNTY
Department of Public Works
100 Third Street
Castle Rock, CO 80104
Phone: (303) 660-7490
FAX: (303) 688-9343

PBS&J
4601 DTC Blvd.
Suite 700
Denver, CO 80237
Phone: 303/221-7275
Fax: 303/221-7276

As Constructed
No Revisions:
Revised:
Void:

QUEBEC OVER C470
QUEBEC ST. WIDENING
DECK ELEVATIONS (2 OF 5)

Designer: S. Abraham
Detailer: E. Schawo
Structure Numbers: F-17-HJ, F-17-QT
Sheet Subset: BRIDGE
Subset Sheets: B38 of 41

Project No./Code
C.I. 03-013
Sheet Number 71

State of Colorado
Department of Transportation
Staff Bridge Design
Bridge Geometry Project Coordinate Converter
Version 1.00

DESCRIPTION

Units: feet;
Project: 246177.00; Subaccount: ;
Designer: SA; Detailer: ERS;
Location: Douglas County;
Pedestrian Bridge over C-470

HORIZONTAL ALIGNMENT DATA

HORIZONTAL TANGENT

VERTICAL ALIGNMENT DATA

ELEVATION AT PI	ELEVATION AT GRADE		STATION		ELEVATION AT GRADE	ELEVATION AT PI	PERCENT GRADE
							-0.998568
5786.9000	5786.9000	PI	71+00.0000				
							-0.998568
			73+65.3800	PI	5784.2500	5784.2500	
							-0.998568

TABLE OF ROADWAY CROSS-SLOPES (SUPERELEVATION: E= -NC-)

STATION	SLOPE LEFT	SLOPE RIGHT	VC LENGTH
(ON TANGENT)	-0.0150	0.0150	50.00 (MAX)

OFFSET PROFILE CONTROL TO PIVOT POINT = 0.0000 FEET

LIMITS OF VALID ELEVATION AND CROSS-SLOPE DATA	BEGIN	END
	* UNLIMITED *	* UNLIMITED *

LAYOUT LINE DATA

LAYOUT LINE DEFINED TO BE COINCIDENT WITH HORIZONTAL CONTROL

	HCL STA	OFFSET	X	Y
LAYOUT LINE INTERSECTS REF LINE AT	71+00.0000	0.00000000	0.0000	0.0000

DEAD LOAD DEFLECTION DATA

DEFLECTIONS AT TENTH POINTS FROM FITTED CURVE

	0.0	0.1	0.2	0.3	0.4	0.5	0.6	0.7	0.8	0.9	1.0	
FOR BENT LINE: CL BRG A1					07 CARD(S): 1			GIRDER LINES REFERENCED BY: A				
INCH	0.0000	0.5800	1.1041	1.5081	1.7488	1.8040	1.6726	1.3749	0.9518	0.4657	0.0000	INCH
FOOT	0.0000	0.0483	0.0920	0.1257	0.1457	0.1503	0.1394	0.1146	0.0793	0.0388	0.0000	FOOT
SLOPE 0.484302											-0.352074	SLOPE

A4= 0.00000
A3= 0.00000
A2= 8.79050
A1=-7.20376
A0=-5.81163

	0.0	0.1	0.2	0.3	0.4	0.5	0.6	0.7	0.8	0.9	1.0	
FOR BENT LINE: AH BRG P2					07 CARD(S): 1			GIRDER LINES REFERENCED BY: A				
INCH	0.0000	0.4657	0.9518	1.3749	1.6726	1.8040	1.7488	1.5081	1.1041	0.5800	0.0000	INCH
FOOT	0.0000	0.0388	0.0793	0.1146	0.1394	0.1503	0.1457	0.1257	0.0920	0.0483	0.0000	FOOT
SLOPE 0.352074											-0.484302	SLOPE

A4= 0.00000
A3= 0.00000
A2= 8.79050
A1=-10.3772
A0=-4.22489

BENT LINE : DESCRIPTION :	INTERSECTION POINT STATION	OFFSET	ELEVATION		FROM LAYOUT LINE OFFSET X	ORDINATE Y	PROJECT COORDINATES NORTHING	EASTING	BENT LINE LENGTH FROM Y-AXIS	SKEW D M S	GIRDER LINE LENGTH FROM REF LINE	ROADWAY CROSS-SLOPE
* HORIZONTAL CONTROL LINE *			AT FINISHED GRADE									
REF LINE	71+00.0000	0.0000	5786.9000		0.0000	0.0000	1630729.3000	3168038.6100	0.0000	0 00 00.00	0.0000	+/-.015000
BF ABUT 1	71+33.6600	0.0000	5786.5639		0.0000	33.6600	1630762.9600	3168038.5901	0.0000	-0 28 00.00	33.6600	+/-.015000
CL BRG A1	71+34.9100	0.0000	5786.5514	10	0.0000	34.9100	1630764.2100	3168038.5894	0.0000	-0 28 00.00	34.9100	+/-.015000
BK BRG P2	72+38.4933	0.0000	5785.5171	1	0.0000	138.4933	1630867.7933	3168038.5281	0.0000	-0 28 00.00	138.4933	+/-.015000
CL PIER 2	72+39.4100	0.0000	5785.5079		0.0000	139.4100	1630868.7100	3168038.5275	0.0000	-0 28 00.00	139.4100	+/-.015000
AH BRG P2	72+40.3267	0.0000	5785.4987	10	0.0000	140.3267	1630869.6267	3168038.5270	0.0000	-0 28 00.00	140.3267	+/-.015000
CL BRG A3	73+43.9100	0.0000	5784.4644	1	0.0000	243.9100	1630973.2100	3168038.4657	0.0000	-0 28 00.00	243.9100	+/-.015000
BF ABUT 3	73+45.1600	0.0000	5784.4519	0.0	0.0000	245.1600	1630974.4600	3168038.4650	0.0000	-0 28 00.00	245.1600	+/-.015000

LEFT EDGE OF DECK — PARALLEL TO HORIZONTAL CONTROL — AT FINISHED GRADE

BENT LINE	STATION	OFFSET	ELEVATION	ELEV+DL	X	Y	NORTHING	EASTING	BENT LNTH	SKEW	GIRDER LNTH	CRS-SLP
REF LINE	71+00.0000	-7.3333	5786.7900		-7.3333	0.0000	1630729.2957	3168031.2767	-7.3333	0 00 00.00	0.0000	-0.015000
BF ABUT 1	71+33.6003	-7.3333	5786.4545		-7.3333	33.6003	1630762.8960	3168031.2568	-7.3335	-0 28 00.00	33.6003	-0.015000
CL BRG A1	71+34.8503	-7.3333	5786.4420		-7.3333	34.8503	1630764.1460	3168031.2561	-7.3335	-0 28 00.00	34.8503	-0.015000
F-1	71+45.2086	-7.3333	5786.3386		-7.3333	45.2086	1630774.5043	3168031.2500			45.2086	-0.015000
F-2	71+55.5669	-7.3333	5786.2351		-7.3333	55.5669	1630784.8626	3168031.2438			55.5669	-0.015000
F-3	71+65.9253	-7.3333	5786.1317		-7.3333	65.9253	1630795.2210	3168031.2377			65.9253	-0.015000
F-4	71+76.2836	-7.3333	5786.0283		-7.3333	76.2836	1630805.5792	3168031.2316			76.2836	-0.015000
F-5	71+86.6419	-7.3333	5785.9248		-7.3333	86.6419	1630815.9375	3168031.2255			86.6419	-0.015000
F-6	71+97.0002	-7.3333	5785.8214		-7.3333	97.0002	1630826.2958	3168031.2193			97.0002	-0.015000
F-7	72+07.3586	-7.3333	5785.7180		-7.3333	107.3586	1630836.6542	3168031.2132			107.3586	-0.015000
F-8	72+17.7169	-7.3333	5785.6145		-7.3333	117.7169	1630847.0125	3168031.2071			117.7169	-0.015000
F-9	72+28.0752	-7.3333	5785.5111		-7.3333	128.0752	1630857.3708	3168031.2009			128.0752	-0.015000
BK BRG P2	72+38.4336	-7.3333	5785.4076		-7.3333	138.4336	1630867.7292	3168031.1948	-7.3335	-0 28 00.00	138.4336	-0.015000
CL PIER 2	72+39.3503	-7.3333	5785.3985		-7.3333	139.3503	1630868.6459	3168031.1943	-7.3335	-0 28 00.00	139.3503	-0.015000
AH BRG P2	72+40.2670	-7.3333	5785.3893		-7.3333	140.2670	1630869.5626	3168031.1937	-7.3335	-0 28 00.00	140.2670	-0.015000
F-1	72+50.6253	-7.3333	5785.2859		-7.3333	150.6253	1630879.9209	3168031.1876			150.6253	-0.015000
F-2	72+60.9836	-7.3333	5785.1825		-7.3333	160.9836	1630890.2792	3168031.1815			160.9836	-0.015000
F-3	72+71.3420	-7.3333	5785.0790		-7.3333	171.3420	1630900.6376	3168031.1754			171.3420	-0.015000
F-4	72+81.7003	-7.3333	5784.9756		-7.3333	181.7003	1630910.9959	3168031.1692			181.7003	-0.015000
F-5	72+92.0586	-7.3333	5784.8722		-7.3333	192.0586	1630921.3542	3168031.1631			192.0586	-0.015000
F-6	73+02.4169	-7.3333	5784.7687		-7.3333	202.4169	1630931.7125	3168031.1570			202.4169	-0.015000
F-7	73+12.7753	-7.3333	5784.6653		-7.3333	212.7753	1630942.0709	3168031.1509			212.7753	-0.015000
F-8	73+23.1336	-7.3333	5784.5619		-7.3333	223.1336	1630952.4292	3168031.1447			223.1336	-0.015000
F-9	73+33.4919	-7.3333	5784.4584		-7.3333	233.4919	1630962.7875	3168031.1386			233.4919	-0.015000
CL BRG A3	73+43.8503	-7.3333	5784.3550		-7.3333	243.8503	1630973.1459	3168031.1325	-7.3335	-0 28 00.00	243.8503	-0.015000
BF ABUT 3	73+45.1003	-7.3333	5784.3425		-7.3333	245.1003	1630974.3959	3168031.1317	-7.3335	-0 28 00.00	245.1003	-0.015000

LEFT FLOWLINE — PARALLEL TO HORIZONTAL CONTROL — AT FINISHED GRADE

BENT LINE	STATION	OFFSET	ELEVATION	ELEV+DL	X	Y	NORTHING	EASTING	BENT LNTH	SKEW	GIRDER LNTH	CRS-SLP
REF LINE	71+00.0000	-6.3333	5786.8050		-6.3333	0.0000	1630729.2963	3168032.2767	-6.3333	0 00 00.00	0.0000	-0.015000
BF ABUT 1	71+33.6084	-6.3333	5786.4694		-6.3333	33.6084	1630762.9046	3168032.2568	-6.3335	-0 28 00.00	33.6084	-0.015000
CL BRG A1	71+34.8584	-6.3333	5786.4569		-6.3333	34.8584	1630764.1546	3168032.2561	-6.3335	-0 28 00.00	34.8584	-0.015000
F-1	71+45.2167	-6.3333	5786.3535		-6.3333	45.2167	1630774.5129	3168032.2500			45.2167	-0.015000
F-2	71+55.5751	-6.3333	5786.2500		-6.3333	55.5751	1630784.8713	3168032.2438			55.5751	-0.015000
F-3	71+65.9334	-6.3333	5786.1466		-6.3333	65.9334	1630795.2296	3168032.2377			65.9334	-0.015000
F-4	71+76.2917	-6.3333	5786.0432		-6.3333	76.2917	1630805.5879	3168032.2316			76.2917	-0.015000
F-5	71+86.6501	-6.3333	5785.9397		-6.3333	86.6501	1630815.9463	3168032.2254			86.6501	-0.015000
F-6	71+97.0084	-6.3333	5785.8363		-6.3333	97.0084	1630826.3046	3168032.2193			97.0084	-0.015000
F-7	72+07.3667	-6.3333	5785.7329		-6.3333	107.3667	1630836.6629	3168032.2132			107.3667	-0.015000
F-8	72+17.7251	-6.3333	5785.6294		-6.3333	117.7251	1630847.0213	3168032.2071			117.7251	-0.015000
F-9	72+28.0834	-6.3333	5785.5260		-6.3333	128.0834	1630857.3796	3168032.2009			128.0834	-0.015000
BK BRG P2	72+38.4417	-6.3333	5785.4226		-6.3333	138.4417	1630867.7379	3168032.1948	-6.3335	-0 28 00.00	138.4417	-0.015000
CL PIER 2	72+39.3584	-6.3333	5785.4134		-6.3333	139.3584	1630868.6546	3168032.1943	-6.3335	-0 28 00.00	139.3584	-0.015000
AH BRG P2	72+40.2751	-6.3333	5785.4043		-6.3333	140.2751	1630869.5713	3168032.1937	-6.3335	-0 28 00.00	140.2751	-0.015000
F-1	72+50.6334	-6.3333	5785.3008		-6.3333	150.6334	1630879.9296	3168032.1876			150.6334	-0.015000
F-2	72+60.9918	-6.3333	5785.1974		-6.3333	160.9918	1630890.2880	3168032.1815			160.9918	-0.015000
F-3	72+71.3501	-6.3333	5785.0940		-6.3333	171.3501	1630900.6463	3168032.1754			171.3501	-0.015000
F-4	72+81.7084	-6.3333	5784.9905		-6.3333	181.7084	1630911.0046	3168032.1692			181.7084	-0.015000
F-5	72+92.0668	-6.3333	5784.8871		-6.3333	192.0668	1630921.3630	3168032.1631			192.0668	-0.015000
F-6	73+02.4251	-6.3333	5784.7836		-6.3333	202.4251	1630931.7213	3168032.1570			202.4251	-0.015000
F-7	73+12.7834	-6.3333	5784.6802		-6.3333	212.7834	1630942.0796	3168032.1508			212.7834	-0.015000
F-8	73+23.1418	-6.3333	5784.5768		-6.3333	223.1418	1630952.4380	3168032.1447			223.1418	-0.015000
F-9	73+33.5001	-6.3333	5784.4733		-6.3333	233.5001	1630962.7963	3168032.1386			233.5001	-0.015000
CL BRG A3	73+43.8584	-6.3333	5784.3699		-6.3333	243.8584	1630973.1546	3168032.1325	-6.3335	-0 28 00.00	243.8584	-0.015000
BF ABUT 3	73+45.1084	-6.3333	5784.3574		-6.3333	245.1084	1630974.4046	3168032.1317	-6.3335	-0 28 00.00	245.1084	-0.015000

NOTES

1. ELEVATIONS ARE AT TOP OF BRIDGE DECK, A MINIMUM OF 3 INCHES BELOW FINISHED GRADE.
2. POSITIVE ROADWAY CROSS SLOPE IS UPWARDS FROM THE PROFILE GRADE LINE.
3. THESE STATIONS, COORDINATES, OFFSETS, AND LENGTHS DEFINE THE LAYOUT OF THE STRUCTURE IN A TWO DIMENSIONAL HORIZONTAL PLANE. ELEVATIONS DEFINE THE FINAL GRADE OF THE FINSHED CONCRETE DECK. FABRICATION OF STRUCTURAL COMPONENTS THROUGH THE DIRECT USE OF THIS INFORMATION IS NOT INTENDED OR ADVISABLE.

PRELIMINARY
SUBJECT TO REVISION

Computer File Information			
Creation Date: 02/03/06	Initials: ERS		
Last Modification Date: 03/29/06	Initials: ERS		
Full Path: S:\Tranproj\ 246177-00\HwyDes\Plans\			
Drawing File Name: brde02.dgn			
CAD Ver. MicroStation V8	Scale: NONE	Units:	ENGLISH

Sheet Revisions

DOUGLAS COUNTY
Department of Public Works
100 Third Street
Castle Rock, CO 80104
Phone: (303) 660-7490
FAX: (303) 688-9343

PBSJ
4601 DTC Blvd.
Suite 700
Denver, CO 80237
Phone: 303/221-7275
Fax: 303/221-7276

As Constructed
No Revisions:
Revised:
Void:

QUEBEC OVER C470
PEDESTRIAN BRIDGE
DECK ELEVATIONS (3 OF 5)

Designer:	S. Abraham	Structure Numbers	F-17-HJ
Detailer:	E. Schawo		F-17-QT
Sheet Subset:	BRIDGE	Subset Sheets: B39 of 41	

Project No./Code
C.I. 03-013

Sheet Number 72

Design	INITIAL	DATE
Designed By	SA	04/06
Checked By	AGW	04/06

Detail	INITIAL	DATE
Detailed By	ERS	04/06
Checked By	AGW	04/06

Quantities	INITIAL	DATE
Quantities By	AGW	03/06
Checked By	KAL	03/06

Revision Dates (Preliminary Stage Only)

s:\tranproj\246177-00\HwyDes\Plans\brde04.dgn
12:53:11 PM
5/30/2006

CL W1 — PARALLEL TO HORIZONTAL CONTROL — AT FINISHED GRADE

BENT LINE	STATION	OFFSET	ELEVATION	ELEV+DL	X	Y	NORTHING	EASTING	BENT LNTH	SKEW	GIRDER LNTH	CRS-SLP
REF LINE	71+00.0000	-5.7917	5786.8131		-5.7917	0.0000	1630729.2966	3168032.8183	-5.7917	0 00 00.00	0.0000	-0.015000
BF ABUT 1	71+33.6128	-5.7917	5786.4775		-5.7917	33.6128	1630762.9094	3168032.7984	-5.7919	-0 28 00.00	33.6128	-0.015000
CL BRG A1	71+34.8628	-5.7917	5786.4650	786.4650	-5.7917	34.8628	1630764.1594	3168032.7977	-5.7919	-0 28 00.00	34.8628	-0.015000
F-1	71+45.2212	-5.7917	5786.3616	786.4099	-5.7917	45.2212	1630774.5178	3168032.7916			45.2212	-0.015000
F-2	71+55.5795	-5.7917	5786.2581	786.3501	-5.7917	55.5795	1630784.8761	3168032.7854			55.5795	-0.015000
F-3	71+65.9378	-5.7917	5786.1547	786.2804	-5.7917	65.9378	1630795.2344	3168032.7793			65.9378	-0.015000
F-4	71+76.2961	-5.7917	5786.0513	786.1970	-5.7917	76.2961	1630805.5927	3168032.7732			76.2961	-0.015000
F-5	71+86.6545	-5.7917	5785.9478	786.0982	-5.7917	86.6545	1630815.9511	3168032.7670			86.6545	-0.015000
F-6	71+97.0128	-5.7917	5785.8444	785.9838	-5.7917	97.0128	1630826.3094	3168032.7609			97.0128	-0.015000
F-7	72+07.3711	-5.7917	5785.7410	785.8555	-5.7917	107.3711	1630836.6677	3168032.7548			107.3711	-0.015000
F-8	72+17.7295	-5.7917	5785.6375	785.7168	-5.7917	117.7295	1630847.0261	3168032.7487			117.7295	-0.015000
F-9	72+28.0878	-5.7917	5785.5341	785.5729	-5.7917	128.0878	1630857.3844	3168032.7425			128.0878	-0.015000
BK BRG P2	72+38.4461	-5.7917	5785.4306	785.4306	-5.7917	138.4461	1630867.7427	3168032.7364	-5.7919	-0 28 00.00	138.4461	-0.015000
CL PIER 2	72+39.3628	-5.7917	5785.4215		-5.7917	139.3628	1630868.6593	3168032.7359	-5.7919	-0 28 00.00	139.3628	-0.015000
AH BRG P2	72+40.2795	-5.7917	5785.4123	785.4123	-5.7917	140.2795	1630869.5760	3168032.7353	-5.7919	-0 28 00.00	140.2795	-0.015000
F-1	72+50.6379	-5.7917	5785.3089	785.3477	-5.7917	150.6379	1630879.9344	3168032.7292			150.6379	-0.015000
F-2	72+60.9962	-5.7917	5785.2055	785.2848	-5.7917	160.9962	1630890.2927	3168032.7231			160.9962	-0.015000
F-3	72+71.3545	-5.7917	5785.1020	785.2166	-5.7917	171.3545	1630900.6510	3168032.7169			171.3545	-0.015000
F-4	72+81.7128	-5.7917	5784.9986	785.1380	-5.7917	181.7128	1630911.0093	3168032.7108			181.7128	-0.015000
F-5	72+92.0712	-5.7917	5784.8952	785.0455	-5.7917	192.0712	1630921.3677	3168032.7047			192.0712	-0.015000
F-6	73+02.4295	-5.7917	5784.7917	784.9375	-5.7917	202.4295	1630931.7260	3168032.6986			202.4295	-0.015000
F-7	73+12.7878	-5.7917	5784.6883	784.8140	-5.7917	212.7878	1630942.0843	3168032.6924			212.7878	-0.015000
F-8	73+23.1462	-5.7917	5784.5849	784.6769	-5.7917	223.1462	1630952.4427	3168032.6863			223.1462	-0.015000
F-9	73+33.5045	-5.7917	5784.4814	784.5298	-5.7917	233.5045	1630962.8010	3168032.6802			233.5045	-0.015000
CL BRG A3	73+43.8628	-5.7917	5784.3780	784.3780	-5.7917	243.8628	1630973.1593	3168032.6741	-5.7919	-0 28 00.00	243.8628	-0.015000
BF ABUT 3	73+45.1128	-5.7917	5784.3655		-5.7917	245.1128	1630974.4093	3168032.6733	-5.7919	-0 28 00.00	245.1128	-0.015000

CL W2 — PARALLEL TO HORIZONTAL CONTROL — AT FINISHED GRADE

BENT LINE	STATION	OFFSET	ELEVATION	ELEV+DL	X	Y	NORTHING	EASTING	BENT LNTH	SKEW	GIRDER LNTH	CRS-SLP
REF LINE	71+00.0000	-0.2917	5786.8956		-0.2917	0.0000	1630729.2998	3168038.3183	-0.2917	0 00 00.00	0.0000	-0.015000
BF ABUT 1	71+33.6576	-0.2917	5786.5595		-0.2917	33.6576	1630762.9574	3168038.2984	-0.2917	-0 28 00.00	33.6576	-0.015000
CL BRG A1	71+34.9076	-0.2917	5786.5470	786.5470	-0.2917	34.9076	1630764.2074	3168038.2977	-0.2917	-0 28 00.00	34.9076	-0.015000
F-1	71+45.2660	-0.2917	5786.4436	786.4919	-0.2917	45.2660	1630774.5658	3168038.2915			45.2660	-0.015000
F-2	71+55.6243	-0.2917	5786.3402	786.4322	-0.2917	55.6243	1630784.9241	3168038.2854			55.6243	-0.015000
F-3	71+65.9826	-0.2917	5786.2367	786.3624	-0.2917	65.9826	1630795.2824	3168038.2793			65.9826	-0.015000
F-4	71+76.3409	-0.2917	5786.1333	786.2790	-0.2917	76.3409	1630805.6407	3168038.2731			76.3409	-0.015000
F-5	71+86.6993	-0.2917	5786.0299	786.1802	-0.2917	86.6993	1630815.9991	3168038.2670			86.6993	-0.015000
F-6	71+97.0576	-0.2917	5785.9264	786.0658	-0.2917	97.0576	1630826.3574	3168038.2609			97.0576	-0.015000
F-7	72+07.4159	-0.2917	5785.8230	785.9376	-0.2917	107.4159	1630836.7157	3168038.2548			107.4159	-0.015000
F-8	72+17.7743	-0.2917	5785.7196	785.7989	-0.2917	117.7743	1630847.0741	3168038.2486			117.7743	-0.015000
F-9	72+28.1326	-0.2917	5785.6161	785.6549	-0.2917	128.1326	1630857.4324	3168038.2425			128.1326	-0.015000
BK BRG P2	72+38.4909	-0.2917	5785.5127	785.5127	-0.2917	138.4909	1630867.7907	3168038.2364	-0.2917	-0 28 00.00	138.4909	-0.015000
CL PIER 2	72+39.4076	-0.2917	5785.5035		-0.2917	139.4076	1630868.7074	3168038.2358	-0.2917	-0 28 00.00	139.4076	-0.015000
AB BRG P2	72+40.3243	-0.2917	5785.4944	785.4944	-0.2917	140.3243	1630869.6241	3168038.2353	-0.2917	-0 28 00.00	140.3243	-0.015000
F-1	72+50.6827	-0.2917	5785.3910	785.4298	-0.2917	150.6827	1630879.9825	3168038.2292			150.6827	-0.015000
F-2	72+61.0410	-0.2917	5785.2875	785.3668	-0.2917	161.0410	1630890.3408	3168038.2230			161.0410	-0.015000
F-3	72+71.3993	-0.2917	5785.1841	785.2987	-0.2917	171.3993	1630900.6991	3168038.2169			171.3993	-0.015000
F-4	72+81.7576	-0.2917	5785.0807	785.2200	-0.2917	181.7576	1630911.0574	3168038.2108			181.7576	-0.015000
F-5	72+92.1160	-0.2917	5784.9772	785.1275	-0.2917	192.1160	1630921.4158	3168038.2047			192.1160	-0.015000
F-6	73+02.4743	-0.2917	5784.8738	785.0195	-0.2917	202.4743	1630931.7741	3168038.1985			202.4743	-0.015000
F-7	73+12.8326	-0.2917	5784.7703	784.8960	-0.2917	212.8326	1630942.1324	3168038.1924			212.8326	-0.015000
F-8	73+23.1910	-0.2917	5784.6669	784.7589	-0.2917	223.1910	1630952.4908	3168038.1863			223.1910	-0.015000
F-9	73+33.5493	-0.2917	5784.5635	784.6118	-0.2917	233.5493	1630962.8491	3168038.1802			233.5493	-0.015000
CL BRG A3	73+43.9076	-0.2917	5784.4600	784.4600	-0.2917	243.9076	1630973.2074	3168038.1740	-0.2917	-0 28 00.00	243.9076	-0.015000
BF ABUT 3	73+45.1576	-0.2917	5784.4476		-0.2917	245.1576	1630974.4574	3168038.1733	-0.2917	-0 28 00.00	245.1576	-0.015000

PGL — PARALLEL TO HORIZONTAL CONTROL — AT FINISHED GRADE

BENT LINE	STATION	OFFSET	ELEVATION	ELEV+DL	X	Y	NORTHING	EASTING	BENT LNTH	SKEW	GIRDER LNTH	CRS-SLP
REF LINE	71+00.0000	0.0000	5786.9000		0.0000	0.0000	1630729.3000	3168038.6100	0.0000	0 00 00.00	0.0000	+/-.015000
BF ABUT 1	71+33.6600	0.0000	5786.5639		0.0000	33.6600	1630762.9600	3168038.5901	0.0000	-0 28 00.00	33.6600	+/-.015000
CL BRG A1	71+34.9100	0.0000	5786.5514		0.0000	34.9100	1630764.2100	3168038.5894	0.0000	-0 28 00.00	34.9100	+/-.015000
F-1	71+45.2683	0.0000	5786.4480		0.0000	45.2683	1630774.5683	3168038.5832			45.2683	+/-.015000
F-2	71+55.6267	0.0000	5786.3445		0.0000	55.6267	1630784.9267	3168038.5771			55.6267	+/-.015000
F-3	71+65.9850	0.0000	5786.2411		0.0000	65.9850	1630795.2850	3168038.5710			65.9850	+/-.015000
F-4	71+76.3433	0.0000	5786.1377		0.0000	76.3433	1630805.6433	3168038.5648			76.3433	+/-.015000
F-5	71+86.7016	0.0000	5786.0342		0.0000	86.7017	1630816.0017	3168038.5587			86.7017	+/-.015000
F-6	71+97.0600	0.0000	5785.9308		0.0000	97.0600	1630826.3600	3168038.5526			97.0600	+/-.015000
F-7	72+07.4183	0.0000	5785.8274		0.0000	107.4183	1630836.7183	3168038.5465			107.4183	+/-.015000
F-8	72+17.7766	0.0000	5785.7239		0.0000	117.7766	1630847.0766	3168038.5403			117.7766	+/-.015000
F-9	72+28.1350	0.0000	5785.6205		0.0000	128.1350	1630857.4350	3168038.5342			128.1350	+/-.015000
BK BRG P2	72+38.4933	0.0000	5785.5171		0.0000	138.4933	1630867.7933	3168038.5281	0.0000	-0 28 00.00	138.4933	+/-.015000
CL PIER 2	72+39.4100	0.0000	5785.5079		0.0000	139.4100	1630868.7100	3168038.5275	0.0000	-0 28 00.00	139.4100	+/-.015000
AH BRG P2	72+40.3267	0.0000	5785.4987		0.0000	140.3267	1630869.6267	3168038.5270	0.0000	-0 28 00.00	140.3267	+/-.015000
F-1	72+50.6850	0.0000	5785.3953		0.0000	150.6850	1630879.9850	3168038.5209			150.6850	+/-.015000
F-2	72+61.0434	0.0000	5785.2919		0.0000	161.0434	1630890.3434	3168038.5147			161.0434	+/-.015000
F-3	72+71.4017	0.0000	5785.1884		0.0000	171.4017	1630900.7017	3168038.5086			171.4017	+/-.015000
F-4	72+81.7600	0.0000	5785.0850		0.0000	181.7600	1630911.0600	3168038.5025			181.7600	+/-.015000
F-5	72+92.1183	0.0000	5784.9816		0.0000	192.1183	1630921.4183	3168038.4964			192.1183	+/-.015000
F-6	73+02.4767	0.0000	5784.8781		0.0000	202.4767	1630931.7767	3168038.4902			202.4767	+/-.015000
F-7	73+12.8350	0.0000	5784.7747		0.0000	212.8350	1630942.1350	3168038.4841			212.8350	+/-.015000
F-8	73+23.1933	0.0000	5784.6713		0.0000	223.1933	1630952.4933	3168038.4780			223.1933	+/-.015000
F-9	73+33.5517	0.0000	5784.5678		0.0000	233.5517	1630962.8517	3168038.4719			233.5517	+/-.015000
CL BRG A3	73+43.9100	0.0000	5784.4644		0.0000	243.9100	1630973.2100	3168038.4657	0.0000	-0 28 00.00	243.9100	+/-.015000
BF ABUT 3	73+45.1600	0.0000	5784.4519		0.0000	245.1600	1630974.4600	3168038.4650	0.0000	-0 28 00.00	245.1600	+/-.015000

CL W3 — PARALLEL TO HORIZONTAL CONTROL — AT FINISHED GRADE

BENT LINE	STATION	OFFSET	ELEVATION	ELEV+DL	X	Y	NORTHING	EASTING	BENT LNTH	SKEW	GIRDER LNTH	CRS-SLP
REF LINE	71+00.0000	0.2917	5786.9044		0.2917	0.0000	1630729.3002	3168038.9017	0.2917	0 00 00.00	0.0000	+0.015000
BF ABUT 1	71+33.6624	0.2917	5786.5682		0.2917	33.6624	1630762.9626	3168038.8818	0.2917	-0 28 00.00	33.6624	+0.015000
CL BRG A1	71+34.9124	0.2917	5786.5558	786.5558	0.2917	34.9124	1630764.2126	3168038.8811	0.2917	-0 28 00.00	34.9124	+0.015000
F-1	71+45.2707	0.2917	5786.4523	786.5006	0.2917	45.2707	1630774.5709	3168038.8749			45.2707	+0.015000
F-2	71+55.6290	0.2917	5786.3489	786.4409	0.2917	55.6290	1630784.9292	3168038.8688			55.6290	+0.015000
F-3	71+65.9874	0.2917	5786.2454	786.3711	0.2917	65.9874	1630795.2876	3168038.8627			65.9874	+0.015000
F-4	71+76.3457	0.2917	5786.1420	786.2877	0.2917	76.3457	1630805.6459	3168038.8565			76.3457	+0.015000
F-5	71+86.7040	0.2917	5786.0386	786.1889	0.2917	86.7040	1630816.0042	3168038.8504			86.7040	+0.015000
F-6	71+97.0624	0.2917	5785.9351	786.0745	0.2917	97.0624	1630826.3626	3168038.8443			97.0624	+0.015000
F-7	72+07.4207	0.2917	5785.8317	785.9463	0.2917	107.4207	1630836.7209	3168038.8382			107.4207	+0.015000
F-8	72+17.7790	0.2917	5785.7283	785.8076	0.2917	117.7790	1630847.0792	3168038.8320			117.7790	+0.015000
F-9	72+28.1373	0.2917	5785.6248	785.6636	0.2917	128.1373	1630857.4375	3168038.8259			128.1373	+0.015000
BK BRG P2	72+38.4957	0.2917	5785.5214	785.5214	0.2917	138.4957	1630867.7958	3168038.8198	0.2917	-0 28 00.00	138.4957	+0.015000
CL PIER 2	72+39.4124	0.2917	5785.5122		0.2917	139.4124	1630868.7125	3168038.8192	0.2917	-0 28 00.00	139.4124	+0.015000
AH BRG P2	72+40.3291	0.2917	5785.5031	785.5031	0.2917	140.3291	1630869.6292	3168038.8187	0.2917	-0 28 00.00	140.3291	+0.015000
F-1	72+50.6874	0.2917	5785.3997	785.4385	0.2917	150.6874	1630879.9875	3168038.8126			150.6874	+0.015000
F-2	72+61.0457	0.2917	5785.2962	785.3755	0.2917	161.0457	1630890.3458	3168038.8064			161.0457	+0.015000
F-3	72+71.4041	0.2917	5785.1928	785.3074	0.2917	171.4041	1630900.7042	3168038.8003			171.4041	+0.015000
F-4	72+81.7624	0.2917	5785.0894	785.2287	0.2917	181.7624	1630911.0625	3168038.7942			181.7624	+0.015000
F-5	72+92.1207	0.2917	5784.9859	785.1363	0.2917	192.1207	1630921.4208	3168038.7881			192.1207	+0.015000
F-6	73+02.4791	0.2917	5784.8825	785.0282	0.2917	202.4791	1630931.7792	3168038.7819			202.4791	+0.015000
F-7	73+12.8374	0.2917	5784.7790	784.9047	0.2917	212.8374	1630942.1375	3168038.7758			212.8374	+0.015000
F-8	73+23.1957	0.2917	5784.6756	784.7676	0.2917	223.1957	1630952.4958	3168038.7697			223.1957	+0.015000
F-9	73+33.5540	0.2917	5784.5722	784.6205	0.2917	233.5540	1630962.8541	3168038.7636			233.5540	+0.015000
CL BRG A3	73+43.9124	0.2917	5784.4687	784.4687	0.2917	243.9124	1630973.2125	3168038.7574	0.2917	-0 28 00.00	243.9124	+0.015000
BF ABUT 3	73+45.1624	0.2917	5784.4563		0.2917	245.1624	1630974.4625	3168038.7567	0.2917	-0 28 00.00	245.1624	+0.015000

CL W4 — PARALLEL TO HORIZONTAL CONTROL — AT FINISHED GRADE

BENT LINE	STATION	OFFSET	ELEVATION	ELEV+DL	X	Y	NORTHING	EASTING	BENT LNTH	SKEW	GIRDER LNTH	CRS-SLP
REF LINE	71+00.0000	5.7917	5786.9869		5.7917	0.0000	1630729.3034	3168044.4017	5.7917	0 00 00.00	0.0000	+0.015000
BF ABUT 1	71+33.7072	5.7917	5786.6503		5.7917	33.7072	1630763.0106	3168044.3818	5.7919	-0 28 00.00	33.7072	+0.015000
CL BRG A1	71+34.9572	5.7917	5786.6378	786.6378	5.7917	34.9572	1630764.2606	3168044.3810	5.7919	-0 28 00.00	34.9572	+0.015000
F-1	71+45.3155	5.7917	5786.5344	786.5827	5.7917	45.3155	1630774.6189	3168044.3749			45.3155	+0.015000
F-2	71+55.6738	5.7917	5786.4309	786.5229	5.7917	55.6738	1630784.9772	3168044.3688			55.6738	+0.015000
F-3	71+66.0322	5.7917	5786.3275	786.4532	5.7917	66.0322	1630795.3356	3168044.3626			66.0322	+0.015000
F-4	71+76.3905	5.7917	5786.2241	786.3698	5.7917	76.3905	1630805.6939	3168044.3565			76.3905	+0.015000
F-5	71+86.7488	5.7917	5786.1206	786.2710	5.7917	86.7488	1630816.0522	3168044.3504			86.7488	+0.015000
F-6	71+97.1072	5.7917	5786.0172	786.1566	5.7917	97.1072	1630826.4106	3168044.3443			97.1072	+0.015000
F-7	72+07.4655	5.7917	5785.9138	786.0283	5.7917	107.4655	1630836.7689	3168044.3381			107.4655	+0.015000
F-8	72+17.8238	5.7917	5785.8103	785.8896	5.7917	117.8238	1630847.1272	3168044.3320			117.8238	+0.015000
F-9	72+28.1821	5.7917	5785.7069	785.7457	5.7917	128.1821	1630857.4855	3168044.3259			128.1821	+0.015000
BK BRG P2	72+38.5405	5.7917	5785.6035	785.6035	5.7917	138.5405	1630867.8439	3168044.3198	5.7919	-0 28 00.00	138.5405	+0.015000
CL PIER 2	72+39.4572	5.7917	5785.5943		5.7917	139.4572	1630868.7606	3168044.3192	5.7919	-0 28 00.00	139.4572	+0.015000
AH BRG P2	72+40.3739	5.7917	5785.5851	785.5851	5.7917	140.3739	1630869.6773	3168044.3187	5.7919	-0 28 00.00	140.3739	+0.015000
F-1	72+50.7322	5.7917	5785.4817	785.5205	5.7917	150.7322	1630880.0356	3168044.3125			150.7322	+0.015000
F-2	72+61.0905	5.7917	5785.3783	785.4576	5.7917	161.0905	1630890.3939	3168044.3064			161.0905	+0.015000
F-3	72+71.4489	5.7917	5785.2748	785.3894	5.7917	171.4489	1630900.7523	3168044.3003			171.4489	+0.015000
F-4	72+81.8072	5.7917	5785.1714	785.3108	5.7917	181.8072	1630911.1106	3168044.2942			181.8072	+0.015000
F-5	72+92.1655	5.7917	5785.0680	785.2183	5.7917	192.1655	1630921.4689	3168044.2880			192.1655	+0.015000
F-6	73+02.5239	5.7917	5784.9645	785.1103	5.7917	202.5239	1630931.8273	3168044.2819			202.5239	+0.015000
F-7	73+12.8822	5.7917	5784.8611	784.9868	5.7917	212.8822	1630942.1856	3168044.2758			212.8822	+0.015000
F-8	73+23.2405	5.7917	5784.7577	784.8497	5.7917	223.2405	1630952.5439	3168044.2697			223.2405	+0.015000
F-9	73+33.5988	5.7917	5784.6542	784.7026	5.7917	233.5988	1630962.9022	3168044.2635			233.5988	+0.015000
CL BRG A3	73+43.9572	5.7917	5784.5508	784.5508	5.7917	243.9572	1630973.2606	3168044.2574	5.7919	-0 28 00.00	243.9572	+0.015000
BF ABUT 3	73+45.2072	5.7917	5784.5383		5.7917	245.2072	1630974.5106	3168044.2567	5.7919	-0 28 00.00	245.2072	+0.015000

RIGHT FLOWLINE — PARALLEL TO HORIZONTAL CONTROL — AT FINISHED GRADE

BENT LINE	STATION	OFFSET	ELEVATION	ELEV+DL	X	Y	NORTHING	EASTING	BENT LNTH	SKEW	GIRDER LNTH	CRS-SLP
REF LINE	71+00.0000	6.3333	5786.9950		6.3333	0.0000	1630729.3037	3168044.9433	6.3333	0 00 00.00	0.0000	+0.015000
BF ABUT 1	71+33.7116	6.3333	5786.6584		6.3333	33.7116	1630763.0153	3168044.9234	6.3335	-0 28 00.00	33.7116	+0.015000
CL BRG A1	71+34.9616	6.3333	5786.6459		6.3333	34.9616	1630764.2653	3168044.9226	6.3335	-0 28 00.00	34.9616	+0.015000
F-1	71+45.3199	6.3333	5786.5424		6.3333	45.3199	1630774.6236	3168044.9165			45.3199	+0.015000
F-2	71+55.6782	6.3333	5786.4390		6.3333	55.6782	1630784.9819	3168044.9104			55.6782	+0.015000
F-3	71+66.0366	6.3333	5786.3356		6.3333	66.0366	1630795.3403	3168044.9042			66.0366	+0.015000
F-4	71+76.3949	6.3333	5786.2321		6.3333	76.3949	1630805.6986	3168044.8981			76.3949	+0.015000
F-5	71+86.7532	6.3333	5786.1287		6.3333	86.7532	1630816.0569	3168044.8920			86.7532	+0.015000
F-6	71+97.1116	6.3333	5786.0253		6.3333	97.1116	1630826.4153	3168044.8859			97.1116	+0.015000
F-7	72+07.4699	6.3333	5785.9218		6.3333	107.4699	1630836.7736	3168044.8797			107.4699	+0.015000
F-8	72+17.8282	6.3333	5785.8184		6.3333	117.8282	1630847.1319	3168044.8736			117.8282	+0.015000
F-9	72+28.1866	6.3333	5785.7150		6.3333	128.1866	1630857.4903	3168044.8675			128.1866	+0.015000
BK BRG P2	72+38.5449	6.3333	5785.6115		6.3333	138.5449	1630867.8486	3168044.8614	6.3335	-0 28 00.00	138.5449	+0.015000
CL PIER 2	72+39.4616	6.3333	5785.6024		6.3333	139.4616	1630868.7653	3168044.8608	6.3335	-0 28 00.00	139.4616	+0.015000
AH BRG P2	72+40.3783	6.3333	5785.5932		6.3333	140.3783	1630869.6820	3168044.8603	6.3335	-0 28 00.00	140.3783	+0.015000
F-1	72+50.7366	6.3333	5785.4898		6.3333	150.7366	1630880.0403	3168044.8541			150.7366	+0.015000
F-2	72+61.0949	6.3333	5785.3864		6.3333	161.0949	1630890.3986	3168044.8480			161.0949	+0.015000
F-3	72+71.4533	6.3333	5785.2829		6.3333	171.4533	1630900.7570	3168044.8419			171.4533	+0.015000
F-4	72+81.8116	6.3333	5785.1795		6.3333	181.8116	1630911.1153	3168044.8358			181.8116	+0.015000
F-5	72+92.1699	6.3333	5785.0761		6.3333	192.1699	1630921.4736	3168044.8296			192.1699	+0.015000
F-6	73+02.5283	6.3333	5784.9726		6.3333	202.5283	1630931.8320	3168044.8235			202.5283	+0.015000
F-7	73+12.8866	6.3333	5784.8692		6.3333	212.8866	1630942.1903	3168044.8174			212.8866	+0.015000
F-8	73+23.2449	6.3333	5784.7657		6.3333	223.2449	1630952.5486	3168044.8113			223.2449	+0.015000
F-9	73+33.6033	6.3333	5784.6623		6.3333	233.6033	1630962.9070	3168044.8051			233.6033	+0.015000
CL BRG A3	73+43.9616	6.3333	5784.5589		6.3333	243.9616	1630973.2653	3168044.7990	6.3335	-0 28 00.00	243.9616	+0.015000
BF ABUT 3	73+45.2116	6.3333	5784.5464		6.3333	245.2116	1630974.5153	3168044.7983	6.3335	-0 28 00.00	245.2116	+0.015000

NOTES

1. ELEVATIONS ARE AT TOP OF BRIDGE DECK, A MINIMUM OF 3 INCHES BELOW FINISHED GRADE.
2. POSITIVE ROADWAY CROSS SLOPE IS UPWARDS FROM THE PROFILE GRADE LINE.
3. THESE STATIONS, COORDINATES, OFFSETS, AND LENGTHS DEFINE THE LAYOUT OF THE STRUCTURE IN A TWO DIMENSIONAL HORIZONTAL PLANE. ELEVATIONS DEFINE THE FINAL GRADE OF THE FINSHED CONCRETE DECK. FABRICATION OF STRUCTURAL COMPONENTS THROUGH THE DIRECT USE OF THIS INFORMATION IS NOT INTENDED OR ADVISABLE.

PRELIMINARY
SUBJECT TO REVISION

Computer File Information	
Creation Date: 02/03/06	Initials: ERS
Last Modificotion Date: 03/29/06	Initials: ERS
Full Path: S:\Tranproj\ 246177-00\HwyDes\Plans\	
Drawing File Name: brde02.dgn	
CAD Ver. MicroStation V8 Scale: NONE	Units: ENGLISH

Sheet Revisions

DOUGLAS COUNTY
Department of Public Works
100 Third Street
Castle Rock, CO 80104
Phone: (303) 660-7490
FAX: (303) 688-9343

PBSJ
4601 DTC Blvd.
Suite 700
Denver, CO 80237
Phone: 303/221-7275
Fax: 303/221-7276

As Constructed
No Revisions:
Revised:
Void:

QUEBEC OVER C470
PEDESTRIAN BRIDGE
DECK ELEVATIONS (4 OF 5)

Designer: S. Abraham
Detailer: E. Schawo
Sheet Subset: BRIDGE
Structure Numbers: F-17-HJ, F-17-QT
Subset Sheets: B40 of 41

Project No./Code
C.I. 03-013

Sheet Number 73

Design	INITIAL	DATE	Detail	INITIAL	DATE	Quantities	INITIAL	DATE
Designed By	SA	04/06	Detailed By	ERS	04/06	Quantities By	AGW	03/06
Checked By	AGW	04/06	Checked By	AGW	04/06	Checked By	KAL	03/06

Revision Dates (Preliminary Stage Only)

s:\tranproj\246177-00\HwyDes\Plans\brde05.dgn
12:53:22 PM
5/30/2006

RIGHT EDGE OF DECK PARALLEL TO HORIZONTAL CONTROL AT FINISHED GRADE

BENT LINE	STATION	OFFSET	ELEVATION	ELEV+DL	X	Y	NORTHING	EASTING	BENT LNTH	SKEW	GIRDER LNTH	CRS-SLP
REF LINE	71+00.0000	7.3333	5787.0100		7.3333	0.0000	1630729.3043	3168045.9433	7.3333	0 00 00.00	0.0000	+0.015000
BF ABUT 1	71+33.7197	7.3333	5786.6733		7.3333	33.7197	1630763.0240	3168045.9234	7.3335	-0 28 00.00	33.7197	+0.015000
CL BRG A1	71+34.9697	7.3333	5786.6608		7.3333	34.9697	1630764.2740	3168045.9226	7.3335	-0 28 00.00	34.9697	+0.015000
F-1	71+45.3281	7.3333	5786.5574		7.3333	45.3281	1630774.6324	3168045.9165			45.3281	+0.015000
F-2	71+55.6864	7.3333	5786.4539		7.3333	55.6864	1630784.9907	3168045.9104			55.6864	+0.015000
F-3	71+66.0447	7.3333	5786.3505		7.3333	66.0447	1630795.3490	3168045.9042			66.0447	+0.015000
F-4	71+76.4031	7.3333	5786.2471		7.3333	76.4031	1630805.7074	3168045.8981			76.4031	+0.015000
F-5	71+86.7614	7.3333	5786.1436		7.3333	86.7614	1630816.0657	3168045.8920			86.7614	+0.015000
F-6	71+97.1197	7.3333	5786.0402		7.3333	97.1197	1630826.4240	3168045.8859			97.1197	+0.015000
F-7	72+07.4780	7.3333	5785.9368		7.3333	107.4780	1630836.7823	3168045.8797			107.4780	+0.015000
F-8	72+17.8364	7.3333	5785.8333		7.3333	117.8364	1630847.1407	3168045.8736			117.8364	+0.015000
F-9	72+28.1947	7.3333	5785.7299		7.3333	128.1947	1630857.4990	3168045.8675			128.1947	+0.015000
BK BRG P2	72+38.5530	7.3333	5785.6265		7.3333	138.5530	1630867.8573	3168045.8613	7.3335	-0 28 00.00	138.5530	+0.015000
CL PIER 2	72+39.4697	7.3333	5785.6173		7.3333	139.4697	1630868.7740	3168045.8608	7.3335	-0 28 00.00	139.4697	+0.015000
AH BRG P2	72+40.3864	7.3333	5785.6081		7.3333	140.3864	1630869.6907	3168045.8603	7.3335	-0 28 00.00	140.3864	+0.015000
F-1	72+50.7448	7.3333	5785.5047		7.3333	150.7448	1630880.0491	3168045.8541			150.7448	+0.015000
F-2	72+61.1031	7.3333	5785.4013		7.3333	161.1031	1630890.4074	3168045.8480			161.1031	+0.015000
F-3	72+71.4614	7.3333	5785.2978		7.3333	171.4614	1630900.7657	3168045.8419			171.4614	+0.015000
F-4	72+81.8198	7.3333	5785.1944		7.3333	181.8198	1630911.1241	3168045.8358			181.8198	+0.015000
F-5	72+92.1781	7.3333	5785.0910		7.3333	192.1781	1630921.4824	3168045.8296			192.1781	+0.015000
F-6	73+02.5364	7.3333	5784.9875		7.3333	202.5364	1630931.8407	3168045.8235			202.5364	+0.015000
F-7	73+12.8947	7.3333	5784.8841		7.3333	212.8947	1630942.1990	3168045.8174			212.8947	+0.015000
F-8	73+23.2531	7.3333	5784.7807		7.3333	223.2531	1630952.5574	3168045.8113			223.2531	+0.015000
F-9	73+33.6114	7.3333	5784.6772		7.3333	233.6114	1630962.9157	3168045.8051			233.6114	+0.015000
CL BRG A3	73+43.9697	7.3333	5784.5738		7.3333	243.9697	1630973.2740	3168045.7990	7.3335	-0 28 00.00	243.9697	+0.015000
BF ABUT 3	73+45.2197	7.3333	5784.5613		7.3333	245.2197	1630974.5240	3168045.7983	7.3335	-0 28 00.00	245.2197	+0.015000

NOTES

1. ELEVATIONS ARE AT TOP OF BRIDGE DECK, A MINIMUM OF 3 INCHES BELOW FINISHED GRADE.
2. POSITIVE ROADWAY CROSS SLOPE IS UPWARDS FROM THE PROFILE GRADE LINE.
3. THESE STATIONS, COORDINATES, OFFSETS, AND LENGTHS DEFINE THE LAYOUT OF THE STRUCTURE IN A TWO DIMENSIONAL HORIZONTAL PLANE. ELEVATIONS DEFINE THE FINAL GRADE OF THE FINSHED CONCRETE DECK. FABRICATION OF STRUCTURAL COMPONENTS THROUGH THE DIRECT USE OF THIS INFORMATION IS NOT INTENDED OR ADVISABLE.

PRELIMINARY
SUBJECT TO REVISION

Computer File Information	
Creation Date: 02/03/06	Initials: ERS
Last Modification Date: 03/29/06	Initials: ERS
Full Path: S:\Tranproj\ 246177-00\HwyDes\Plans\	
Drawing File Name: brde02.dgn	
CAD Ver. MicroStation V8 Scale: NONE	Units: ENGLISH

Sheet Revisions

DOUGLAS COUNTY
Department of Public Works
100 Third Street
Castle Rock, CO 80104
Phone: (303) 660-7490
FAX: (303) 688-9343

PBSJ
4601 DTC Blvd.
Suite 700
Denver, CO 80237
Phone: 303/221-7275
Fax: 303/221-7276

As Constructed
No Revisions:
Revised:
Void:

QUEBEC OVER C470
PEDESTRIAN BRIDGE
DECK ELEVATIONS (5 OF 5)

Designer: S. Abraham
Detailer: E. Schawo
Sheet Subset: BRIDGE
Structure Numbers: F-17-HJ, F-17-QT
Subset Sheets: B41 of 41

Project No./Code
C.I. 03-013

Sheet Number 74

Revision Dates (Preliminary Stage Only)

Design	INITIAL	DATE
Designed By	SA	04/06
Checked By	AGW	04/06

Detail	INITIAL	DATE
Detailed By	ERS	04/06
Checked By	AGW	04/06

Quantities	INITIAL	DATE
Quantities By	AGW	03/06
Checked By	KAL	03/06

12:53:37 PM s:\tranproj\246177-00\HwyDes\Plans\brde05.dgn
5/30/2006

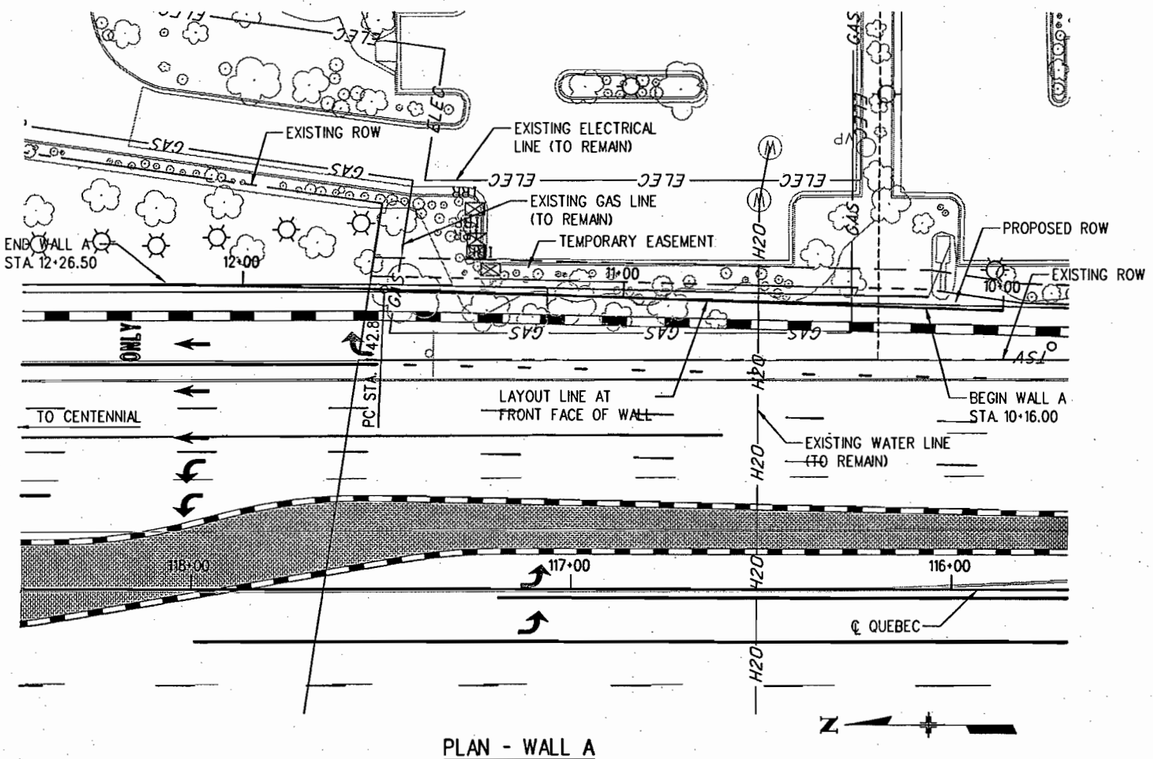

PLAN - WALL A

(ORIGINAL GROUND CONTOURS SHOWN)

GRAPHIC SCALE

10 5 10 20 VERT
20 0 10 20 40 HORZ
(IN FEET)

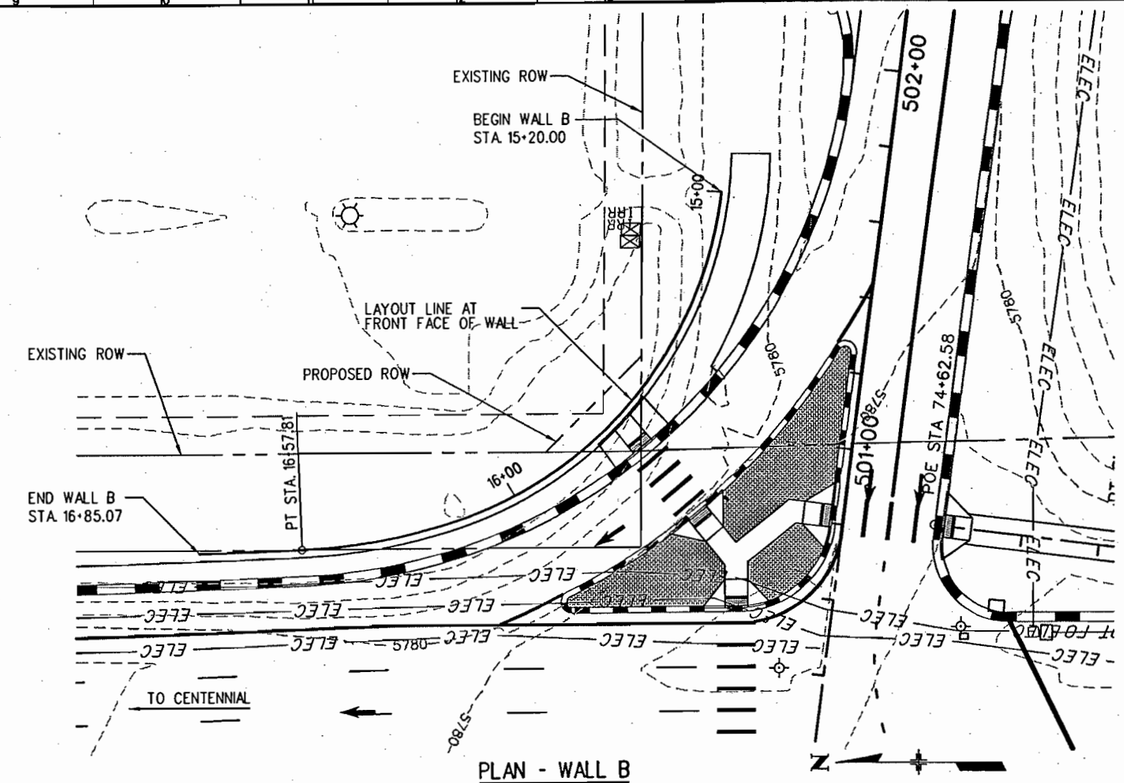

PLAN - WALL B

(ORIGINAL GROUND CONTOURS SHOWN)

GRAPHIC SCALE

10 5 10 20 VERT
20 0 10 20 40 HORZ
(IN FEET)

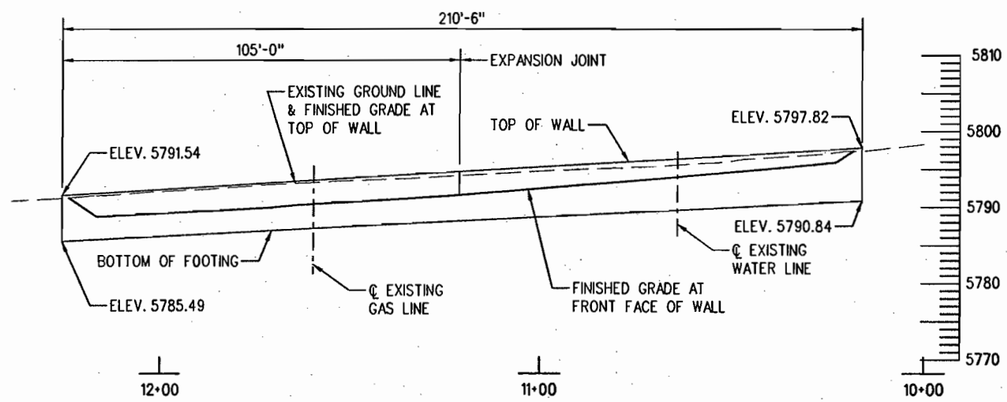

ELEVATION - WALL A

(TAKEN ALONG WALL A LAYOUT LINE)

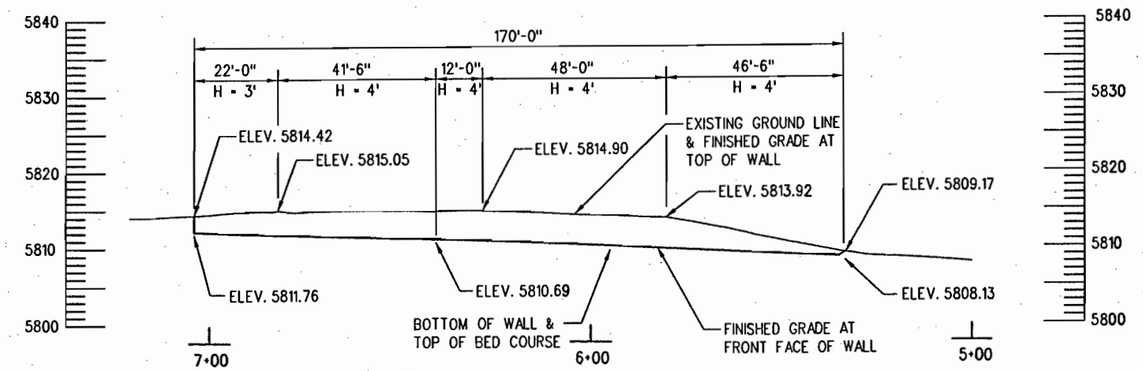

ELEVATION - WALL B

(TAKEN ALONG WALL B LAYOUT LINE)

PRELIMINARY
SUBJECT TO REVISION

Design	INITIAL	DATE
Designed By	DAN	4/04
Checked By		

Detail	INITIAL	DATE
Detailed By	ARP	4/04
Checked By		

Quantities	INITIAL	DATE
Quantities By		
Checked By		

Revision Dates (Preliminary Stage Only)

S:\Tranproj\246177-00\HwyDes\Plans\wlgt01.dgn
9:23:01 AM
5/31/2006

Computer File Information	
Creation Date: 04/15/04	Initials: ARP
Last Modification Date: 05/04/04	Initials: ARP
Full Path: S:\Tranproj\ 246177-00\HwyDes\Plans\	
Drawing File Name: wlgt01.dgn	
CAD Ver. MicroStation V8 Scale: 1"=40'-0"	Units: ENGLISH

Sheet Revisions

DOUGLAS COUNTY
Department of Public Works
100 Third Street
Castle Rock, CO 80104
Phone: (303) 660-7490
FAX: (303) 688-9343

PBSJ
4601 DTC Blvd.
Suite 700
Denver, CO 80237
Phone: 303/221-7275
Fax: 303/221-7276

As Constructed
No Revisions:
Revised:
Void:

RETAINING WALLS
WALL A & B GENERAL LAYOUT

Designer:	D. Nemovitz	Structure Numbers	F-17-HJ
Detailer:	A. Pelster		F-17-QT
Sheet Subset:	WALL	Subset Sheets:	W1 of 2

Project No./Code
C.I. 03-013

Sheet Number 75

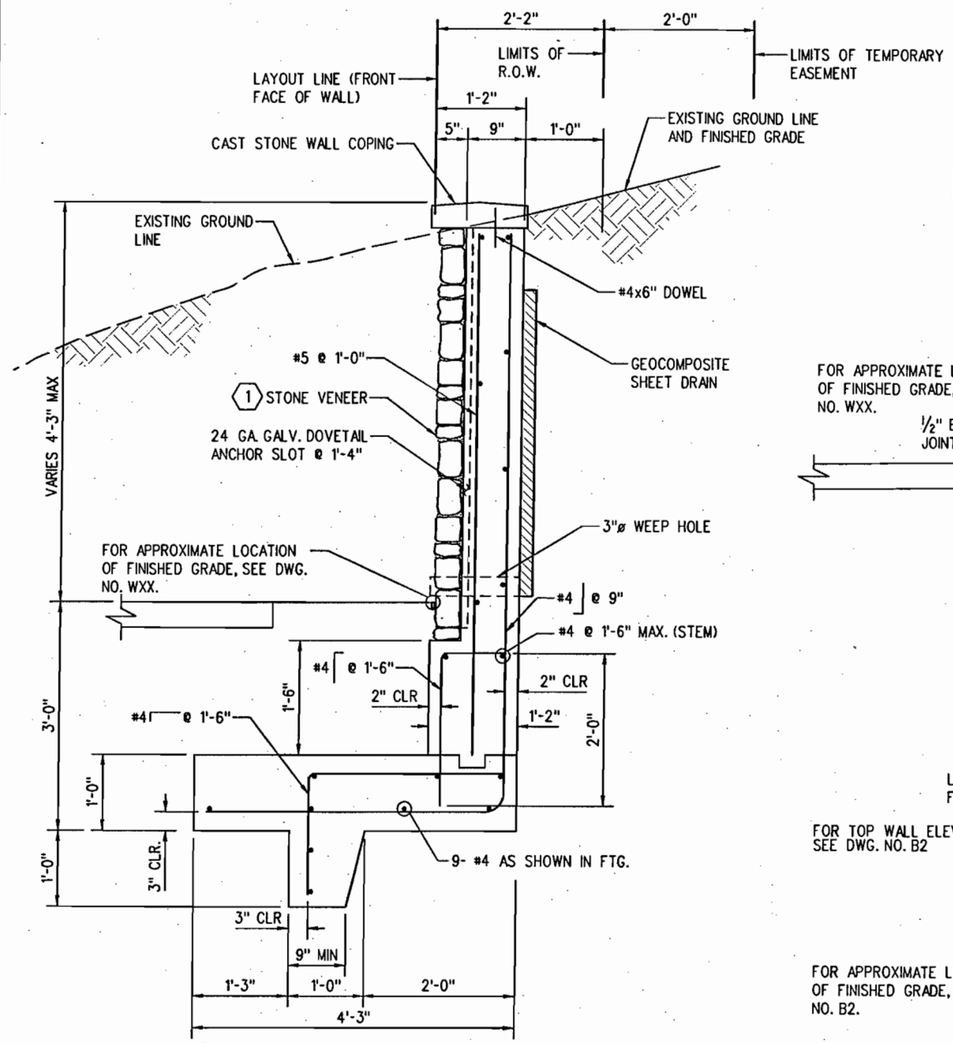

TYPICAL SECTION - WALL A

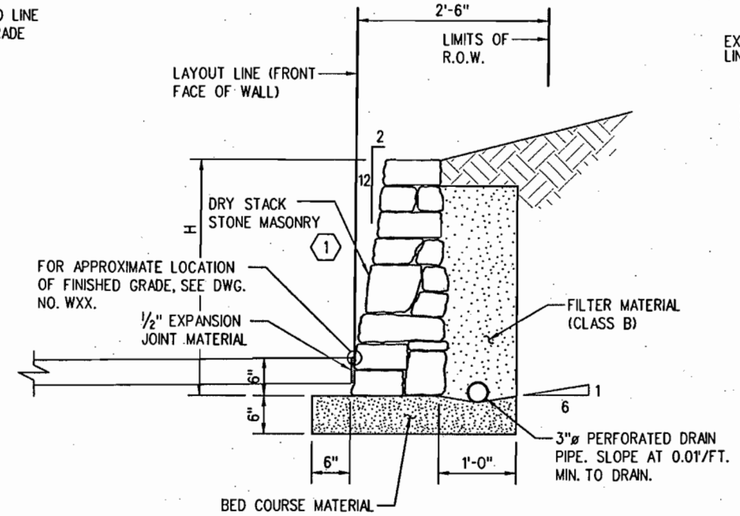

TYPICAL SECTION - WALL B

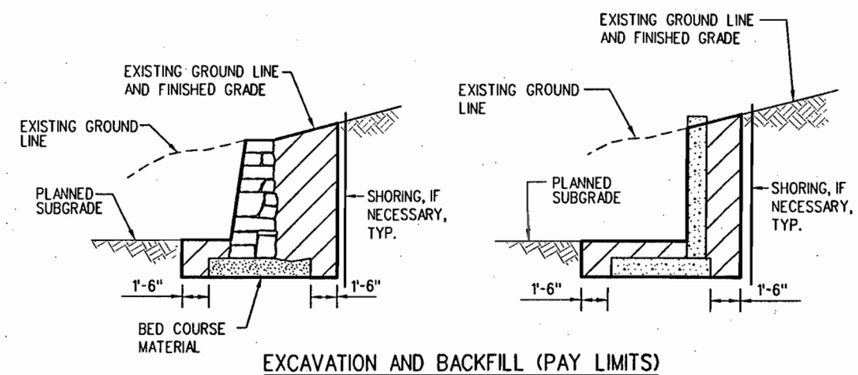

EXCAVATION AND BACKFILL (PAY LIMITS)

LEGEND

- STRUCTURE EXCAVATION LIMITS
- COMPACTED STRUCTURE BACKFILL, CLASS 1 OR 2 AS SHOWN ON PLANS
- CONCRETE
- DRY STACK STONE MASONRY

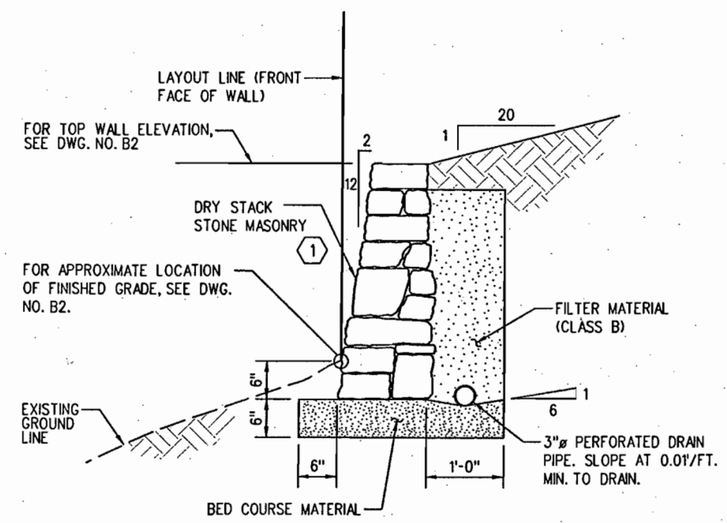

TYPICAL SECTION - LANDSCAPE WALLS L1 THRU L4

NOTE: FOR WALL LAYOUT PLAN, SEE DWG. NO. B2.

NOTES

REBAR CLEARANCE IS 2" EXCEPT AS NOTED.

KEY NOTES

(1) STONE VENEER AND DRY STACK STONE MASONRY SHALL BE LYONS RED SANDSTONE OR APPROVED EQUAL.

PRELIMINARY
SUBJECT TO REVISION

Design	INITIAL	DATE
Designed By	DAN	4/04
Checked By		

Detail	INITIAL	DATE
Detailed By	ARP	4/04
Checked By		

Quantities	INITIAL	DATE
Quantities By		
Checked By		

Revision Dates (Preliminary Stage Only)

12:53:43 PM s:\tranproj\246177-00\hwydes\plans\wldt01.dgn 5/30/2006

Computer File Information	
Creation Date: 04/15/04	Initials: ARP
Last Modification Date: 05/25/06	Initials: ERS
Full Path: S:\Tranproj\ 246177-00\HwyDes\Plans\	
Drawing File Name: wldt01.dgn	
CAD Ver. MicroStation V8 Scale: 1/2"=1'-0"	Units: ENGLISH

Sheet Revisions

DOUGLAS COUNTY
Department of Public Works
100 Third Street
Castle Rock, CO 80104
Phone: (303) 660-7490
FAX: (303) 688-9343

PBSJ
4601 DTC Blvd.
Suite 700
Denver, CO 80237
Phone: 303/221-7275
Fax: 303/221-7276

As Constructed
No Revisions:
Revised:
Void:

RETAINING WALLS TYPICAL SECTION

Designer:	D. Nemovitz	Structure Numbers	F-17-HJ
Detailer:	A. Pelster		F-17-QT
Sheet Subset:	WALL	Subset Sheets: W2 of 2	

Project No./Code
C.I. 03-013

Sheet Number 76