11301

AS CONSTRUCTED			
NO REVISIONS ☐	REVISED ☑	VOID ☐	

FEDERAL RD REGION NO.	DIVISION	PROJ. NO.	SHEET NO.	TOTAL SHEETS
VIII	COLORADO	CC 4701-082	1	154

REVISIONS			
R-1	4/22/96	SHEET NOS. 1, 5, 11	GCH

COLORADO DEPARTMENT OF TRANSPORTATION

PLAN AND PROFILE OF ~~PROPOSED~~ AS CONSTRUCTED

COLORADO CONSTRUCTION PROJECT NO. CC 4701-082
C-470 / YOSEMITE INTERCHANGE
DOUGLAS COUNTY
CONSTRUCTION SUBACCOUNT NO. 11301

PE AND ROW UNDER PROJ. NO. CC 4701-081
SUB ACCOUNT NO. 11166
NHS SYSTEM ■ YES ☐ NO
FHWA OVERSIGHT ■ YES ☐ NO

TABULATION OF LENGTH & DESIGN DATA

STATION	ROADWAY meters	MAJOR STRUCTURE meters
BEGIN PROJECT (CC 4701-082) STA. 0+092 WBCL (CC 4701-082) = STA. 1320+98.75 PROJ. NO. IXFU 470-1(17) MP24.43	162.053	
BEGIN WIDENING STR. NO. F-17-H0 STA. 0+254.053 WBCL		
END WIDENING STR. NO. F-17-H0 STA. 0+296.572 WBCL		42.519
END PROJECT CC 4701-082 STA. 1+867.85 WBOR = STA. 1378+43.91 PROJ. NO. IXFU 470-1(17) MP25.52	1 571.278	
TOTALS	1 733.331	42.519

SUMMARY	meters	km
Roadway	1 733.331	1.733331
Major Structure	42.519	0.042519
GROSS AND NET LENGTH	1 775.850	1.77585

DESIGN DATA

	MAINLINE	RAMPS
Maximum Degree of Curve	03°47'07"	04°41'19"
Maximum Grade	3.847%	3.847%
Minimum S.S.D. Horizontal		>290.000
Minimum S.S.D. Vertical		159
Maximum Design Speed	120 km/hr.	120 km/hr.

2015 Design Traffic Volume (20 Year Design)

	C-470	E.B. RAMP	W.B. RAMP	YOSEMITE ST.
ADT -	103,900	9,545	12,500	20,545
DHV - (SEE TRAFFIC SIGNAL PLANS)				
TRUCKS -				
COMBINATION	1.75%	1.75%	1.75%	1.75%
SINGLE UNIT	2.40%	2.40%	2.40%	2.40%

SCALES OF DRAWINGS

PLAN 1:500
PROFILE { 1:500 HORIZONTAL, 1:50 VERTICAL }

NOTE: PROFILE GRADE SHOWN AT FINISHED GRADE.

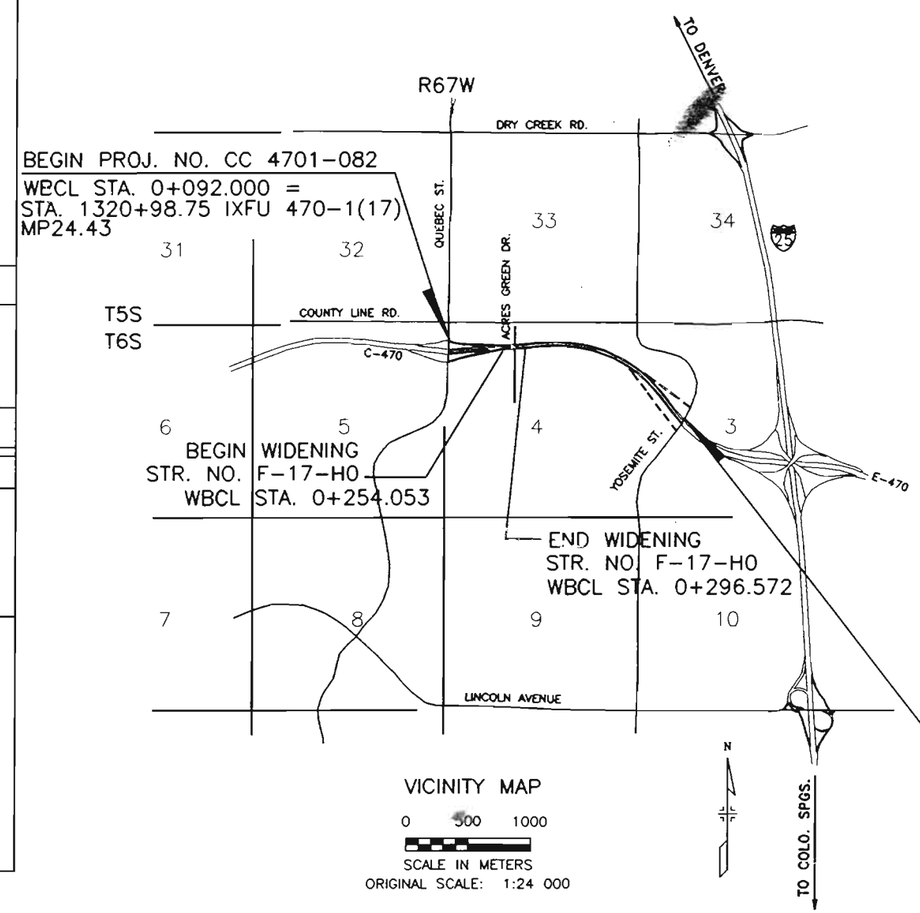

VICINITY MAP
0 500 1000
SCALE IN METERS
ORIGINAL SCALE: 1:24 000

END PROJ. NO. CC 4701-082
WBORCL STA. 1+867.85 =
STA. 1378+43.91 IXFU 470-1(17)
MP25.52

REG VI / GCH

INDEX OF SHEETS

SHEET NO.	DWG. NO.	DESCRIPTION
R-1 1		TITLE SHEET
2		STANDARD PLANS LIST
3-4	TY-1 TO TY-2	TYPICAL SECTIONS
R-1 5	GN-1	GENERAL NOTES AND TYPICAL SECTIONS
R-1 6-11	SQ-1 TO SQ-6	SUMMARY OF APPROXIMATE QUANTITIES
12-13	ST-1 TO ST-2	TABULATION OF STORM SEWER SYSTEM
14	ST-3	TABULATION OF REMOVALS, RESETS, ADJUSTS & MODIFY
15	ST-4	SUMMARY OF EARTHWORK, FENCING & DELINEATORS
16	ST-5	TABULATION OF SURFACING QUANTITIES
17	ST-6	TABULATION OF CURB & GUTTER, SIDEWALK, GUARDRAIL & BARRIER
18	ST-7	SURVEY TABULATION SHEET
19	GP-1	GEOMETRIC PLAN
20		R.O.W. TABULATION OF PROPERTIES IN DOUGLAS COUNTY
21		SURVEY CONTROL DIAGRAM
22-23		CONTROL AND MONUMENTATION SHEETS 'METERS'
24-25		CONTROL AND MONUMENTATION SHEETS 'FEET'
26		TABULATION OF MONUMENTS
27-28		ROW MAPS
29-30		OWNERSHIP MAPS
31-32	SB-1 TO SB-2	SOIL BORING LOGS
33	MD-1	MISCELLANEOUS DETAILS
34-36	ID-1 TO ID-3	INTERSECTION DETAIL SHEETS
37-42		RETAINING WALL SHEETS
43-64		BRIDGE PLANS AND DETAIL SHEETS
65-72	PL-1 TO PL-8	PLAN SHEETS
73-76	PP-1 TO PP-4	RAMP PROFILE SHEETS
77-78	PP-5 TO PP-6	BIKEPATH PROFILE SHEETS
79	PP-7	ACCESS ROAD PROFILE SHEET
80	GD-1	GRADING DETAILS
81-82	DD-1 TO DD-2	DRAINAGE DETAILS
83-84	SP-1 TO SP-2	STORM SEWER PROFILES
85	EC-4	STORMWATER MANAGEMENT PLAN AND TABULATION
86	EC-5	STORMWATER MANAGEMENT PLAN DETAILS
87-89	EC-1 TO EC-3	EROSION CONTROL PLANS
90-96	L-0 TO L-6	LANDSCAPING PLAN SHEETS
97-104	I-1 TO I-8	IRRIGATION PLAN SHEETS
105	TE-1	TABULATION OF TRAFFIC ENGINEERING ITEMS
106-107	SS-3 TO SS-4	TABULATION OF SIGNS
108	SS-1	TABULATION OF PAVEMENT MARKINGS
109	SS-2	TABULATION OF OVERHEAD SIGNS
110	TC-1	CONSTRUCTION TRAFFIC CONTROL TABULATION
111-119	TC-2 TO TC-10	CONSTRUCTION TRAFFIC CONTROL PLANS
120	PM-1	PAVEMENT MARKING WORDS AND SYMBOLS
121-129		OVERHEAD SIGNS - TUBULAR DETAILS
130		SIGN #61 DETAILS
131-133	SS-5 TO SS-7	SIGNING PLANS
134-135	SS-8 TO SS-9	SIGN CROSS SECTIONS
136-137	SS-19 TO SS-20	STRIPING PLANS
138-141	TS-1 TO TS-4	TRAFFIC SIGNAL PLANS
142	SI-1	TRAFFIC SIGNAL INTERCONNECT
143-149	TS-5 TO TS-11	DOUGLAS COUNTY STANDARD SIGNAL DETAILS
150-151	LP-1 TO LP-2	LIGHTING PLAN
152		GUARDRAIL END ANCHORAGE (SRT) DETAIL
153		CONCRETE PAVEMENT JOINTS

AS CONSTRUCTED INFORMATION

CONTRACTOR EDWARD KISSELMER
ENGINEER R.L. MCKENZIE (Project or Resident)
PROJECT STARTED 08/19/96
PROJECT COMPLETED 12/13/96
AS CONSTRUCTED PLANS APPROVED _____ TITLE _____ DATE

\\5088\ACAD\A5088001.dwg, 1 1, 04/18/96 at 13:40 COMPUTER GENERATED DRAWING DO NOT ALTER MANUALLY

AS CONSTRUCTED				
NO REVISIONS ☐	REVISED ☐	VOID ☐		

FEDERAL RD REGION NO	DIVISION	PROJ. NO.	SHEET NO.	TOTAL SHEETS
VIII	COLORADO	CC 4701-082	2	154

REVISIONS		

PLAN NUMBER	M STANDARD TITLE	PAGE NUMBER
■ M-100-1	STANDARD SYMBOLS	1
☐ M-107-1	TEMPORARY EROSION CONTROL	2
☐ M-203-1	APPROACH ROADS	3
☐ M-203-2	DITCH TYPES	4
☐ M-203-10	SUPERELEVATION CROWNED HIGHWAYS	5
☐ M-203-11	SUPERELEVATION DIVIDED HIGHWAYS SHOULDER PIVOT	6
☐ M-203-12	SUPERELEVATION STREETS	7
☐ M-203-13	SUPERELEVATION DIVIDED HIGHWAYS CENTER PIVOT	8
■ M-206-1	EXCAVATION AND BACKFILL FOR STRUCTURES (3 SHEETS)	9
☐ M-206-2	EXCAVATION AND BACKFILL FOR BRIDGES	12
☐ M-210-1	MAILBOX SUPPORTS (2 SHEETS)	13
■ M-214-1	PLANTING DETAILS	15
☐ M-412-1	CONCRETE PAVEMENT JOINTS	16
☐ M-412-2	CURBED CONCRETE PAVEMENT JOINTS	17
☐ M-504-1	STEEL CRIBBING	18
■ M-506-1	GABIONS AND SLOPE MATTRESS	19
☐ M-510-1	STRUCTURAL PLATE CULVERT PIPE H-20 LOADING	20
☐ M-601-1	SINGLE CONCRETE BOX CULVERT (2 SHEETS)	21
☐ M-601-2	DOUBLE CONCRETE BOX CULVERT (2 SHEETS)	23
☐ M-601-3	TRIPLE CONCRETE BOX CULVERT (2 SHEETS)	25
■ M-601-10	HEADWALL FOR PIPE CULVERTS	27
☐ M-601-11	TYPE "S" SADDLE HEADWALL FOR PIPE CULVERTS	28
■ M-601-12	HEADWALLS AND CULVERT OUTLET PAVING	29
■ M-601-20	WINGWALLS FOR PIPE OR BOX CULVERTS	30
■ M-603-1	METAL AND PLASTIC CULVERT PIPE (2 SHEETS)	31
■ M-603-2	REINFORCED CONCRETE PIPE	33
☐ M-603-3	PRECAST CONCRETE BOX CULVERT	34
■ M-603-10	CONCRETE AND METAL END SECTIONS (2 SHEETS)	35
■ M-604-10	INLET, TYPE C	37
■ M-604-11	INLET, TYPE D	38
■ M-604-12	CURB INLET, TYPE R (2 SHEETS)	39
☐ M-604-13	CONCRETE INLET, TYPE 13	41
■ M-604-20	MANHOLES (3 SHEETS)	42
■ M-605-1	SUBSURFACE DRAINS	45
■ M-606-1	GUARDRAIL, TYPE 3, W-BEAM (12 SHEETS)	46
☐ M-606-12	GUARDRAIL, TYPE 4, CONCRETE BARRIER (6 SHEETS)	58

PLAN NUMBER	M STANDARD TITLE	PAGE NUMBER
■ M-607-1	WIRE FENCES AND GATES (2 SHEETS)	64
■ M-607-2	CHAIN LINK FENCE (3 SHEETS)	66
☐ M-607-3	BARRIER FENCE	69
☐ M-607-4	DEER FENCE AND GATE (2 SHEETS)	70
☐ M-607-10	PICKET SNOW FENCE	72
■ M-608-1	CURB RAMPS	73
■ M-609-1	CURBS AND GUTTERS	74
☐ M-611-1	CATTLE GUARD (2 SHEETS)	75
■ M-613-1	CONVENTIONAL HIGHWAY LIGHTING (3 SHEETS)	77
☐ M-613-2	HIGH MAST LIGHTING (2 SHEETS)	80
☐ M-614-1	RUMBLE STRIPS	82
■ M-615-1	EMBANKMENT PROTECTOR, TYPE 3	83
■ M-615-2	EMBANKMENT PROTECTOR, TYPE 5	84
☐ M-616-1	INVERTED SIPHON (ALSO USE APPLICABLE M-603)	85
☐ M-620-1	FIELD LABORATORY, CLASS 1	86
■ M-620-2	FIELD LABORATORY, CLASS 2	87
☐ M-620-11	FIELD OFFICE, CLASS 1	88
■ M-620-12	FIELD OFFICE, CLASS 2	89
■ M-629-1	SURVEY MONUMENTS (2 SHEETS)	90

PLAN NUMBER	S STANDARD TITLE	PAGE NUMBER
■ S-612-1	TYPICAL DELINEATOR INSTALLATIONS (5 SHEETS)	93
■ S-614-1	TYPICAL GROUND SIGN PLACEMENT	98
■ S-614-2	CLASS I GROUND SIGN INSTALLATIONS	99
■ S-614-3	CLASS II GROUND SIGN INSTALLATIONS	100
■ S-614-4	CLASS III SIGNS, SHEET ALUMINUM PANELS (3 SHEETS)	101
■ S-614-5	BREAK-AWAY SIGN SUPPORT DETAILS FOR GROUND SIGNS (2 SHEETS)	104
■ S-614-6	CONCRETE FOOTINGS AND SIGN ISLANDS FOR CLASS III SIGNS (2 SHEETS)	106
■ S-614-10	TYPICAL MARKER ASSEMBLY INSTALLATIONS	108
☐ S-614-11	MILEPOST SIGN AND INSTALLATION	109
■ S-614-12	STRUCTURE NUMBER INSTALLATION (BRIDGE INFORMATION SHEET)	110
☐ S-614-14	FLASHING BEACON AND SIGN INSTALLATION (2 SHEETS)	111
■ S-614-20	TYPICAL POLE MOUNT SIGN INSTALLATION	113
☐ S-614-21	CONCRETE BARRIER SIGN POST INSTALLATIONS	114
■ S-614-22	TYPICAL MULTI-SIGN INSTALLATIONS	115
■ S-614-40	TYPICAL TRAFFIC SIGNAL INSTALLATION DETAILS (3 SHEETS)	116
■ S-627-1	TYPICAL PAVEMENT MARKINGS (4 SHEETS)	119
■ S-630-1	TRAFFIC CONTROLS FOR HIGHWAY CONSTRUCTION (9 SHEETS)	123
■ S-630-2	BARRICADES, DRUMS, CONCRETE BARRIERS (TEMP) & VERTICAL PANELS	132
■ S-630-3	FLASHING BEACON (PORTABLE) DETAILS	133

THE STANDARD PLAN SHEETS INDICATED HEREON BY A MARKED BOX ARE TO BE USED TO CONSTRUCT THIS PROJECT.

COLORADO DEPARTMENT OF TRANSPORTATION

STANDARD PLANS LIST

M & S STANDARDS NOVEMBER 1992
(WITH METRIC UNITS 1994)

AS CONSTRUCTED			
NO REVISIONS	REVISED	VOID	

FEDERAL RD REGION NO.	DIVISION	PROJ. NO	SHEET NO.	TOTAL SHEETS
VIII	COLORADO	CC 4701-082	3	154

REVISIONS		

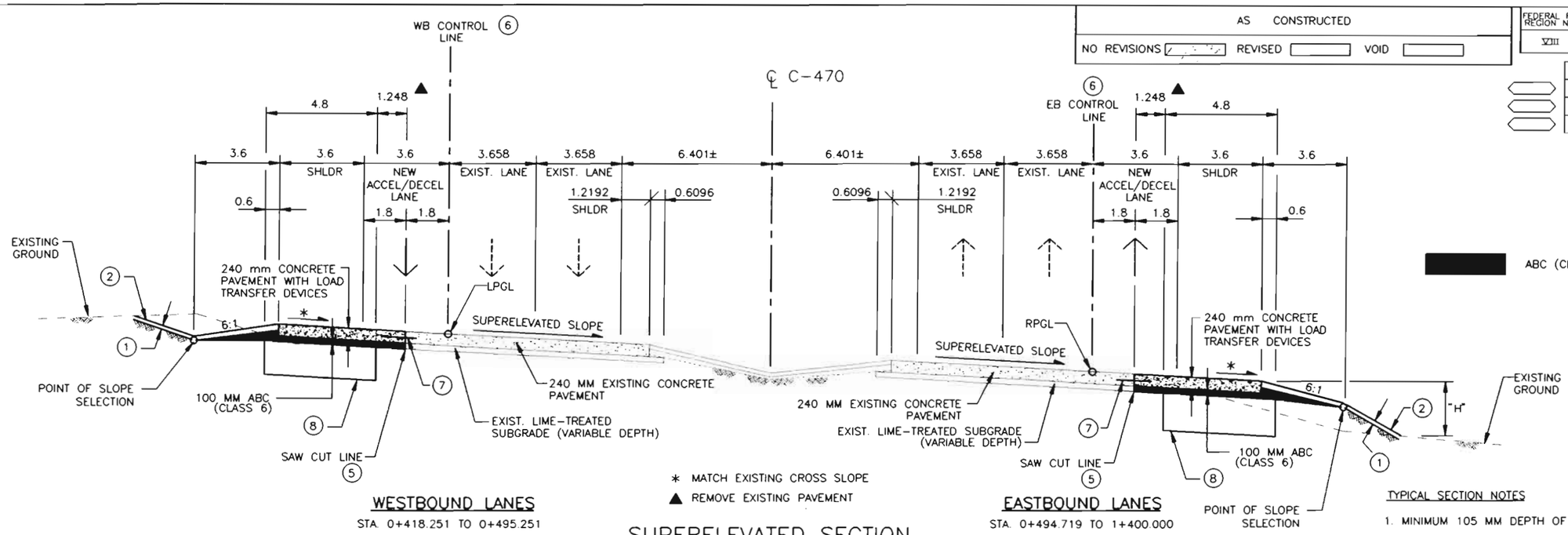

WESTBOUND LANES
STA. 0+418.251 TO 0+495.251

EASTBOUND LANES
STA. 0+494.719 TO 1+400.000

SUPERELEVATED SECTION

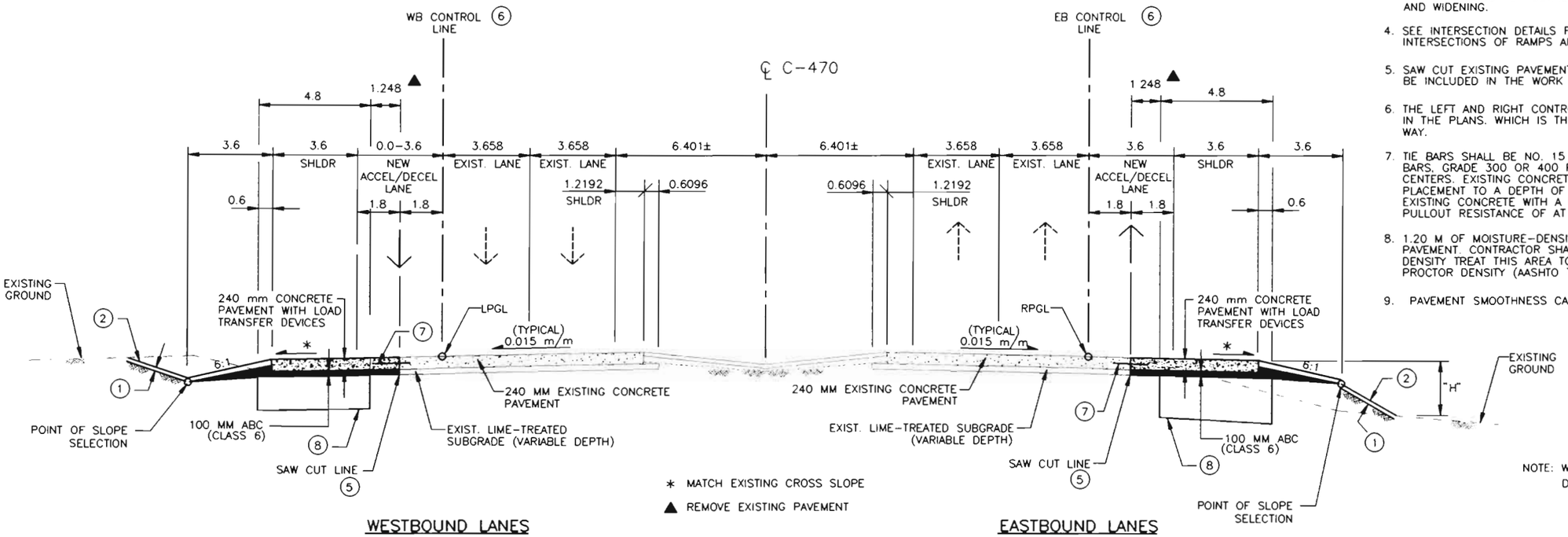

WESTBOUND LANES
STA. 0+092.000 TO 0+254.053
STA. 0+296.572 TO 0+418.251

EASTBOUND LANES
STA. 0+305 TO 0+419.719

TANGENT SECTION

TYPICAL SECTION NOTES

1. MINIMUM 105 MM DEPTH OF TOPSOIL TYPICAL
2. SIDE SLOPES:
   SLOPE 4:1 WHERE "H" IS 3.0 M OR LESS
   SLOPE 3:1 WHERE "H" IS OVER 3.0 M.
3. BREAK POINTS ON SLOPES AND IN BOTTOMS OF DITCHES SHALL BE ROUNDED DURING CONSTRUCTION FOR A PLEASING APPEARANCE. SEE STANDARDS FOR DETAILS OF CUT SLOPE TREATMENT, FLARING, AND WIDENING.
4. SEE INTERSECTION DETAILS FOR ADDITIONAL INFORMATION AT INTERSECTIONS OF RAMPS AND CROSS STREETS.
5. SAW CUT EXISTING PAVEMENT TO A NEAT VERTICAL EDGE. COST TO BE INCLUDED IN THE WORK AND NOT PAID FOR SEPARATELY.
6. THE LEFT AND RIGHT CONTROL LINE GEOMETRICS ARE AS DEFINED IN THE PLANS. WHICH IS THE EXISTING EDGE OF TRAVELLED WAY.
7. TIE BARS SHALL BE NO. 15 EPOXY COATED, DEFORMED REINFORCING BARS, GRADE 300 OR 400 PER AASHTO M 284M 750 MM LONG ON 750 MM CENTERS. EXISTING CONCRETE SHALL BE DRILLED TO FACILITATE BAR PLACEMENT TO A DEPTH OF 375 MM. BARS SHALL BE EPOXY SEALED INTO EXISTING CONCRETE WITH A PRODUCT THAT PROVIDES AN AVERAGE PULLOUT RESISTANCE OF AT LEAST 35 kN WITH SLIPPAGE OF 2 MM OR LESS.
8. 1.20 M OF MOISTURE-DENSITY TREATED MATERIAL BELOW PROPOSED PAVEMENT. CONTRACTOR SHALL SUBEXCAVATE AND/OR MOISTURE-DENSITY TREAT THIS AREA TO AT LEAST 95% OF THE MAXIMUM STANDARD PROCTOR DENSITY (AASHTO T-99) AT OR ABOVE OPTIMUM MOISTURE CONTENT.
9. PAVEMENT SMOOTHNESS CATEGORY SHALL BE 2.

NOTE: WHOLE NUMBERS INDICATE MILLIMETERS
DECIMAL NUMBERS INDICATE METERS

FELSBURG HOLT & ULLEVIG

C-470/YOSEMITE INTERCHANGE

TYPICAL SECTIONS

DATE	PROJECT NO.	DESIGNED BY	DRAWN BY	CHECKED BY	SHEET NO.	OF	SHEETS	DRAWING NO.
FEB 96	95-088	CH	SS	DB	1	2		TY-1

AS CONSTRUCTED			
NO REVISIONS ☐	REVISED ☐	VOID ☐	

FEDERAL RD REGION NO.	DIVISION	PROJ. NO	SHEET NO.	TOTAL SHEETS
VIII	COLORADO	CC 4701-082	4	154

REVISIONS		

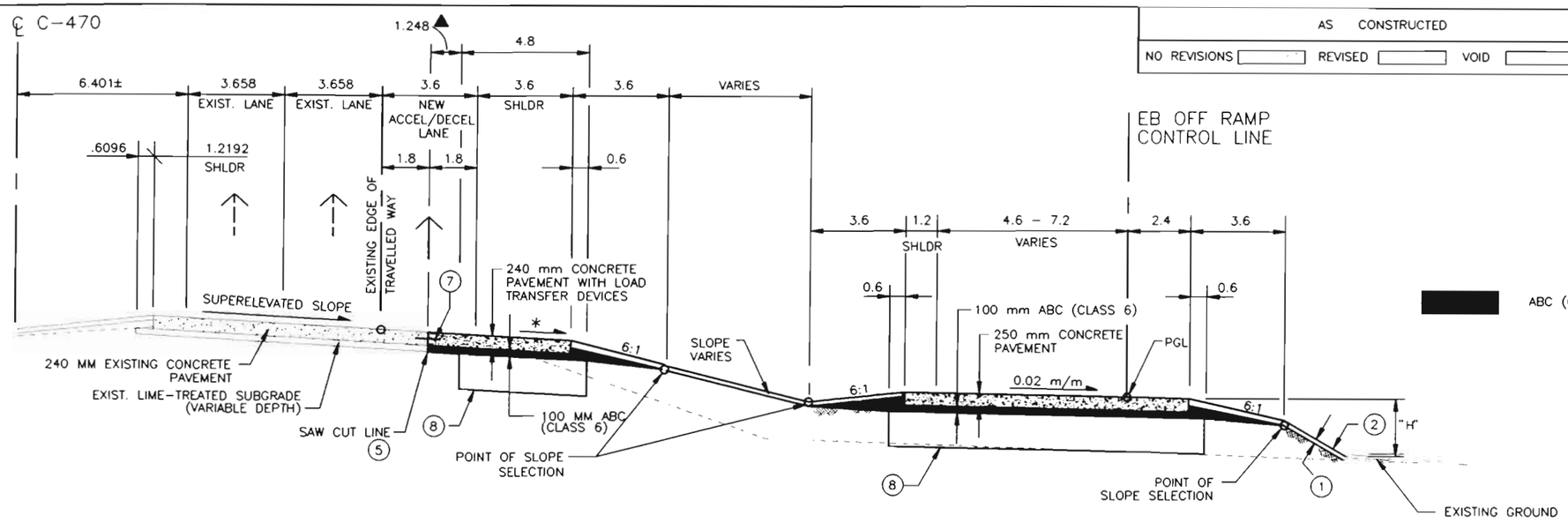

EB MAINLINE C470
(EAST OF RAMP GORE)

EB OFF RAMP SECTION

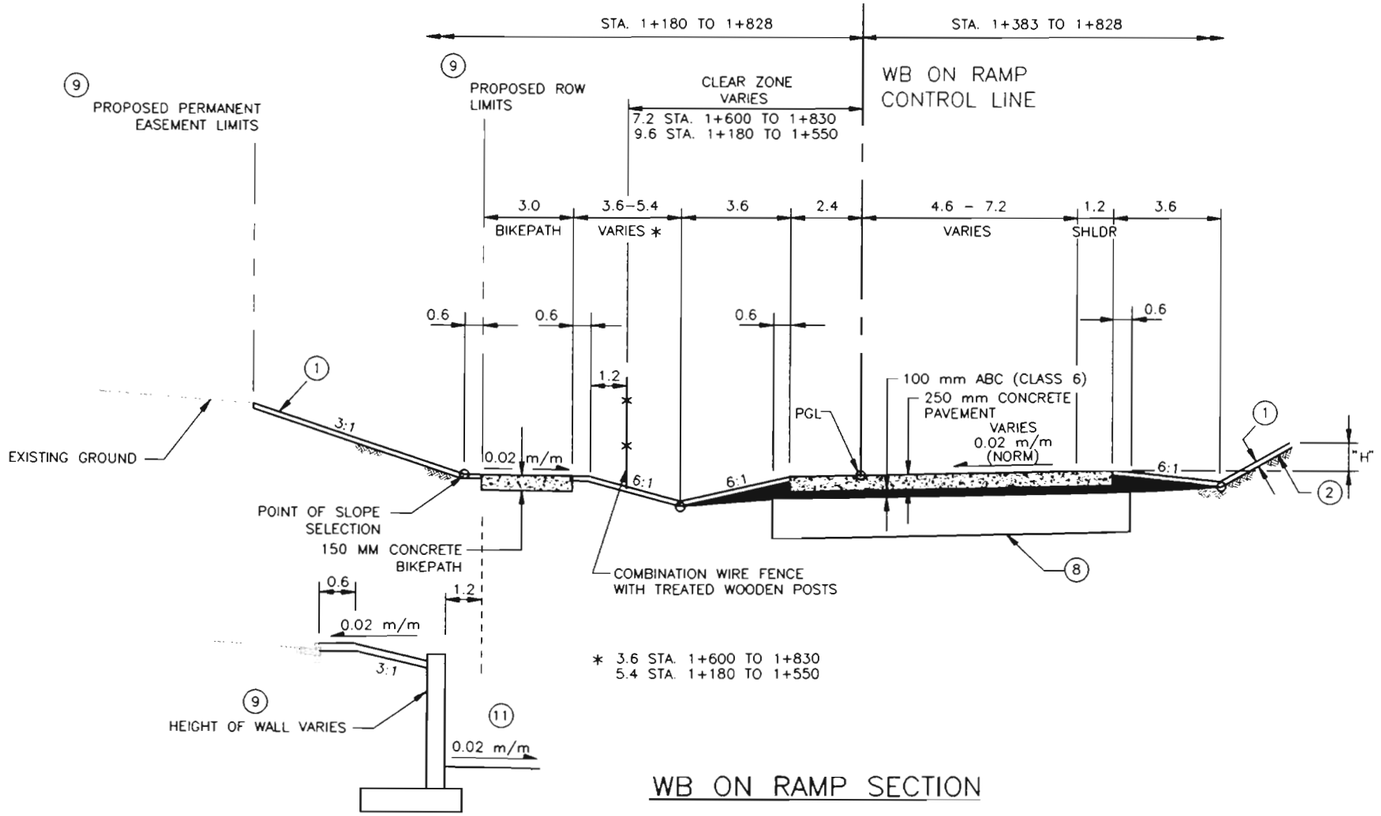

WB ON RAMP SECTION

TYPICAL SECTION NOTES

1. MINIMUM 105 MM DEPTH OF TOPSOIL TYPICAL
2. SIDE SLOPES:
   SLOPE 4:1 WHERE "H" IS 3.0 M OR LESS
   SLOPE 3:1 WHERE "H" IS OVER 3.0 M.
3. BREAK POINTS ON SLOPES AND IN BOTTOMS OF DITCHES SHALL BE ROUNDED DURING CONSTRUCTION FOR A PLEASING APPEARANCE. SEE STANDARDS FOR DETAILS OF CUT SLOPE TREATMENT, FLARING, AND WIDENING.
4. SEE INTERSECTION DETAILS FOR ADDITIONAL INFORMATION AT INTERSECTIONS OF RAMPS AND CROSS STREETS.
5. SAW CUT EXISTING PAVEMENT TO A NEAT VERTICAL EDGE. COST TO BE INCLUDED IN THE WORK AND NOT PAID FOR SEPARATELY.
6. THE LEFT AND RIGHT CONTROL LINE GEOMETRICS ARE AS DEFINED IN THE PLANS. WHICH IS THE EXISTING EDGE OF TRAVELLED WAY.
7. TIE BARS SHALL BE NO. 15 EPOXY COATED, DEFORMED REINFORCING BARS, GRADE 300 OR 400 PER AASHTO M 284M 750 MM LONG ON 750 MM CENTERS. EXISTING CONCRETE SHALL BE DRILLED TO FACILITATE BAR PLACEMENT TO A DEPTH OF 375 MM. BARS SHALL BE EPOXY SEALED INTO EXISTING CONCRETE WITH A PRODUCT THAT PROVIDES AN AVERAGE PULLOUT RESISTANCE OF AT LEAST 35 kN WITH SLIPPAGE OF 2 MM OR LESS.
8. 1.20 M OF MOISTURE-DENSITY TREATED MATERIAL BELOW PROPOSED PAVEMENT. CONTRACTOR SHALL SUBEXCAVATE AND/OR MOISTURE-DENSITY TREAT THIS AREA TO AT LEAST 95% OF THE MAXIMUM STANDARD PROCTOR DENSITY (AASHTO T-99) AT OR ABOVE OPTIMUM MOISTURE CONTENT.
9. PAVEMENT SMOOTHNESS CATEGORY SHALL BE 2.
10. SEE PLAN SHEETS FOR LIMITS OF PROPOSED ROW & PERMANENT EASEMENTS.
11. SEE PLAN SHEETS & GENERAL LAYOUT FOR LIMITS OF RETAINING WALL.

NOTE: WHOLE NUMBERS INDICATE MILLIMETERS
DECIMAL NUMBERS INDICATE METERS

FELSBURG HOLT & ULLEVIG

C-470/YOSEMITE INTERCHANGE
RAMP TYPICAL SECTION

DATE	PROJECT NO.	DESIGNED BY	SHEET NO.	DRAWING NO.
FEB 96	95-088	CH	2	TY-2
		DRAWN BY SS	OF SHEETS	
		CHECKED BY DB		

AS CONSTRUCTED			
NO REVISIONS ☐	REVISED ☐	VOID ☐	

FEDERAL RD REGION NO.	DIVISION	PROJ. NO.	SHEET NO.	TOTAL SHEETS
VIII	COLORADO	CC 4701-082	5	154

REVISIONS			
R-1	4/22/96	REMOVED NOTE	GCH

GENERAL NOTES

1. FOR PRELIMINARY PLAN QUANTITIES OF PAVEMENT STRUCTURE MATERIALS, THE FOLLOWING RATES OF APPLICATION WERE USED:

   TACK COAT DILUTED EMULSIFIED ASPHALT (SLOW SETTING) .. @ 0.453 L/m^2 (DILUTED)
   BITUMINOUS PAVEMENT .. @ 2.349 $kg/m^2/mm$
   AGGREGATE BASE COURSE .. @2 130.45 kg/m^3

   DILUTED EMULSIFIED ASPHALT FOR TACK COAT SHALL CONSIST OF 1 PART EMULSIFIED ASPHALT AND 1 PART WATER, OR AS DIRECTED BY ENGINEER. A TACK COAT WILL BE REQUIRED BETWEEN LAYERS OF BITUMINOUS PAVEMENT. RATES OF APPLICATION SHALL BE AS DETERMINED BY THE ENGINEER AT THE TIME OF APPLICATION.

2. ANY LAYER OF BITUMINOUS PAVEMENT THAT IS TO HAVE A SUCCEEDING LAYER PLACED THEREON SHALL BE COMPLETED FULL WIDTH BEFORE SUCCEEDING LAYER IS PLACED.

3. DEPTH OF MOISTURE-DENSITY CONTROL FOR THIS PROJECT SHALL BE AS FOLLOWS:
   FULL DEPTH OF ALL EMBANKMENTS. MATERIAL BELOW NEW PAVEMENT TO 1.200 M BASES OF CUT AND FILLS 150 MM.

   EXCAVATION REQUIRED FOR COMPACTION OF BASES OF CUTS AND FILLS WILL BE CONSIDERED AS SUBSIDIARY TO THAT OPERATION AND WILL NOT BE PAID FOR SEPARATELY.

4. COMPACTION FOR EARTHWORK OPERATIONS SHALL BE AASHTO T 99.

5. WATER USED AS A DUST PALLIATIVE AND WATER REQUIRED FOR AIR POLLUTION CONTROL, WILL NOT BE PAID FOR SEPARATELY BUT SHALL BE INCLUDED IN THE WORK.

6. UTILITY LINES AS SHOWN ON THE PLAN SHEETS ARE PLOTTED FROM THE BEST AVAILABLE INFORMATION. THE CONTRACTOR'S ATTENTION IS DIRECTED TO PARAGRAPH 105.06 OF THE STANDARD SPECIFICATION CONCERNING UTILITIES.

   THE CONTRACTOR WILL CALL 534-6700 FOR UTILITY LOCATION AT LEAST 2 WORKING DAYS PRIOR TO ANY EXCAVATION, NOT INCLUDING THE DAY OF ACTUAL NOTICE.

7. IT IS SUGGESTED THAT THE CONTRACTOR INITIATE A REQUEST TO THE PUBLIC SERVICE COMPANY FOR ANY CONSTRUCTION-RELATED TEMPORARY ELECTRICAL POWER SOURCES AS SOON AS POSSIBLE. IN SOME INSTANCES, UP TO 30 DAYS MAY BE REQUIRED TO PROVIDE THE SOURCES. THE REQUEST IS TO BE PROCESSED THROUGH PUBLIC SERVICE COMPANY OF COLORADO. CONTACT CHERI WEERS, PSCO STREET LIGHTING AT (303) 571-2505.

8. WHERE IT IS REQUIRED TO SAW CUT EXISTING PAVEMENT, THE CUTTING SHALL BE DONE TO A NEAT VERTICAL EDGE. THIS WILL NOT BE PAID FOR SEPARATELY, BUT WILL BE CONSIDERED AS SUBSIDIARY TO REMOVAL OF ASPHALT MAT AND/OR CONCRETE PAVEMENT.

~~9. THE CONTRACTOR'S SURVEYOR SHALL CONTACT CDOT REGION 6 RIGHT OF WAY 14 DAYS PRIOR TO PICK UP OF ALL REQUIRED MONUMENTS FOR THE PROJECT.~~ R-1

9. THE CONTRACTOR SHALL LIMIT CONSTRUCTION ACTIVITIES TO THOSE AREAS WITHIN THE LIMITS OF DISTURBANCE AND/OR TOES OF SLOPE AS SHOWN ON THE PLANS AND CROSS SECTIONS. ANY DISTURBANCE BEYOND THESE LIMITS SHALL BE RESTORED TO ORIGINAL CONDITION AT THE CONTRACTOR'S EXPENSE. CONSTRUCTION ACTIVITIES, IN ADDITION TO NORMAL CONSTRUCTION PROCEDURES SHALL INCLUDE THE PARKING OF VEHICLES OR EQUIPMENT, DISPOSAL OF LITTER, AND ANY ACTION WHICH WOULD ALTER EXISTING CONDITIONS.

10. THE CONTRACTOR WILL BE REQUIRED TO BROOM THE TRAVELLED ROADWAY WHEN OPERATIONS ARE USING OR CROSSING THE ROADWAYS. THE BROOMING MAY BE REQUIRED ON A DAILY BASIS OR AS DIRECTED BY THE ENGINEER. THIS IS NOT TO BE PAID SEPARATELY, BUT SHALL BE INCLUDED IN THE COST OF THE WORK.

11. THE CONTRACTOR WILL NOT BE ALLOWED TO USE ANY TYPE OF DEVICE TO MATCH CURB & GUTTER. HE WILL BE REQUIRED TO ALLOW THE PAVER TO FLOAT ALONG THE PAN LINE INSURING THAT THE TOP OF ASPHALT MAT NEVER GOES BELOW THE PAN LINE NOR MORE THAN 13 mm ABOVE.

12. IT IS ESTIMATED THAT 3723 m3 OF TOPSOIL WILL BE REQUIRED FOR THIS PROJECT. TOPSOIL WILL BE MEASURED IN PLACE AT A 105 mm DEPTH.

13. ALL CONCRETE FOR PORTLAND CEMENT CONCRETE PAVEMENT SHALL BE CLASS P.

14. IT IS ESTIMATED THAT 40 HOURS OF POTHOLING WILL BE REQUIRED.

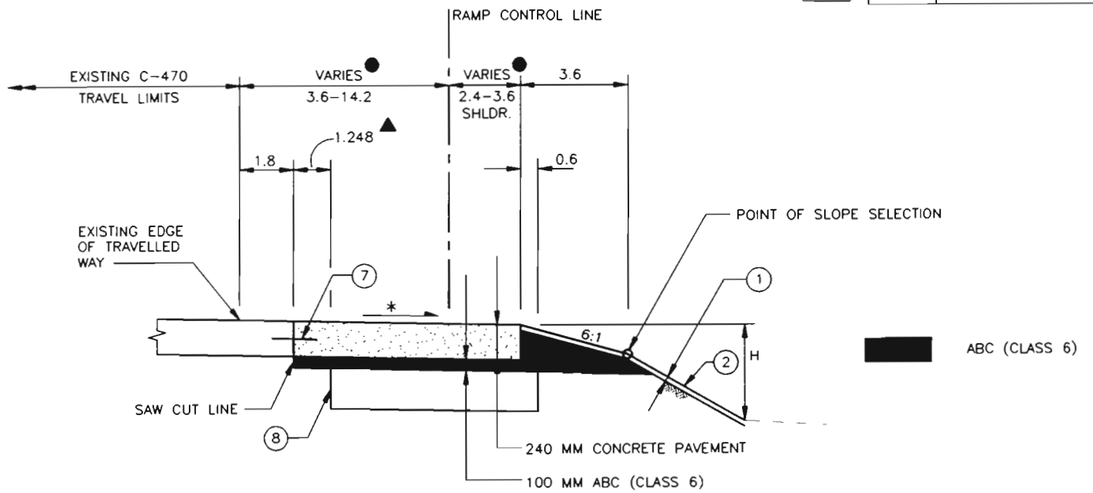

* MATCH EXISTING CROSS SLOPE
▲ REMOVE EXISTING PAVEMENT
● SEE PLAN SHEETS FOR LIMITS
(X) SEE TYPICAL SECTION SHEETS FOR TYPICAL SECTION NOTES

RAMP GORE TYPICAL SECTIONS

SECTION SHOWN FOR EB OFF RAMP (OPPOSITE HAND FOR WB ON RAMP)

STA. 1+400 TO 1+512 EB OFF RAMP CONTROL LINE
STA. 0+495.251 TO 1+383 WB ON RAMP CONTROL LINE

NOTE: WHOLE NUMBERS INDICATE MILLIMETERS
DECIMAL NUMBERS INDICATE METERS

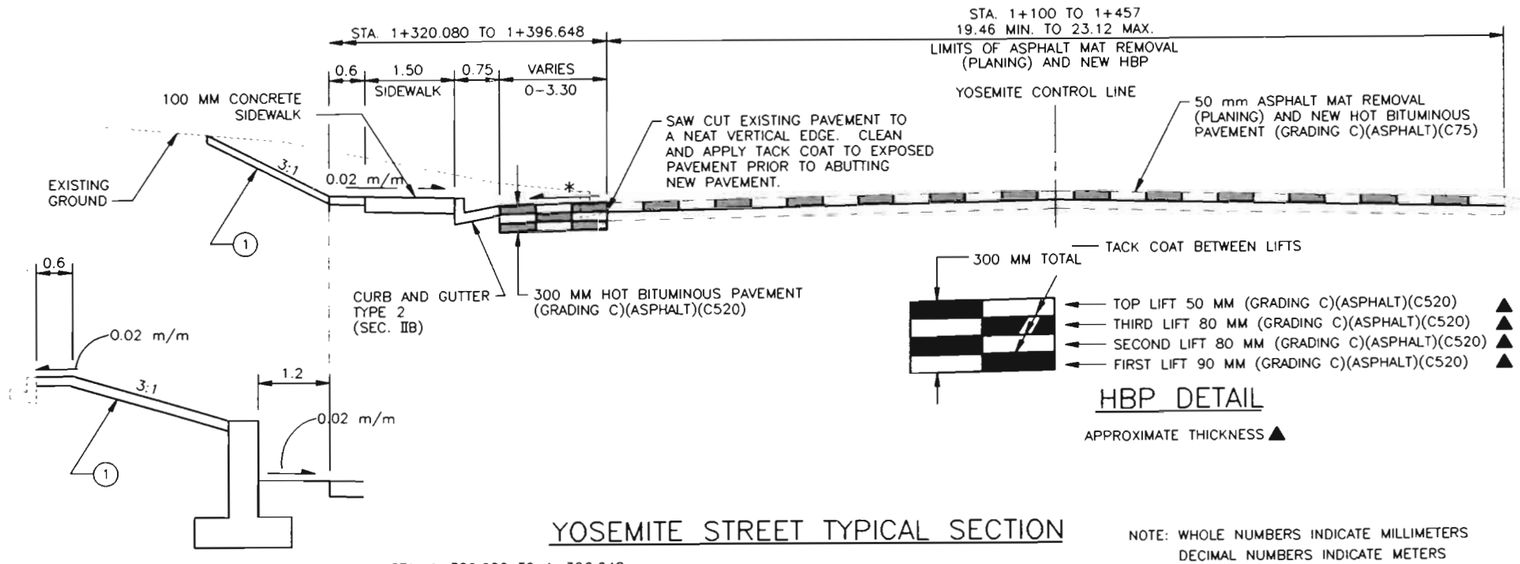

HBP DETAIL

APPROXIMATE THICKNESS ▲

YOSEMITE STREET TYPICAL SECTION

STA. 1+320.080 TO 1+396.648

(X) SEE TYPICAL SECTION SHEETS FOR TYPICAL SECTION NOTES

* MATCH EXISTING CROSS SLOPE

NOTE: WHOLE NUMBERS INDICATE MILLIMETERS
DECIMAL NUMBERS INDICATE METERS

FELSBURG HOLT & ULLEVIG

C-470/YOSEMITE INTERCHANGE
GENERAL NOTES & TYPICAL SECTIONS

DATE	PROJECT NO.	DESIGNED BY CH	SHEET NO. 1	DRAWING NO.
FEB 96	95-088	DRAWN BY DRS	OF 1 SHEETS	GN-1
		CHECKED BY DB		

AS CONSTRUCTED			
NO REVISIONS ☐	REVISED ☐	VOID ☐	

FEDERAL RD REGION NO	DIVISION	PROJ. NO	SHEET NO.	TOTAL SHEETS
VIII	COLORADO	CC 4701-082	5	154

REVISIONS		

SUMMARY OF ~~APPROXIMATE~~ FINAL QUANTITIES

INDEX BOOK	INDEX PAGE	INDEX SHEET	CONTRACT ITEM NO.	CONTRACT ITEM	UNIT	ROADWAY PLAN	ROADWAY AS CONST.	STRUCTURE NO. F-17-HO PLAN	STRUCTURE NO. F-17-HO AS CONST.	PROJECT TOTALS PLAN	PROJECT TOTALS AS CONST.
			201	CLEARING AND GRUBBING	LS	1				1	
			202	REMOVAL OF STRUCTURES AND OBSTRUCTIONS	LS	1				1	
			202	REMOVAL OF STRUCTURE	EACH	4				4	
			202	REMOVAL OF PIPE	M	22				22	
			202	REMOVAL OF END SECTION	EACH	3				3	
			202	REMOVAL OF DELINEATOR	EACH	64				64	
			202	REMOVAL OF SIDEWALK	M2	7 225				7 225	
			202	REMOVAL OF CURB AND GUTTER	M	289				289	
			202	REMOVAL OF CONCRETE PAVEMENT	M2	3 462				3 462	
			202	REMOVAL OF ASPHALT MAT	M2	294				294	
			202	REMOVAL OF ASPHALT MAT (PLANING)	M2	7 138				7 138	
			202	REMOVAL OF PAVEMENT MARKING	M2	300				300	
			202	REMOVAL OF PORTIONS OF PRESENT STRUCTURE	LS			1		1	
			202	REMOVAL OF PORTIONS OF PRESENT STRUCTURE	EACH	1				1	
			202	REMOVAL OF GROUND SIGN	EACH	7				7	
			202	REMOVAL OF FENCE	M	1 567				1 567	
			202	REMOVAL OF GUARDRAIL TYPE 3	M	105				105	
			202	REMOVAL OF GUARDRAIL TYPE 4	M	110				110	
			202	CLEAN CULVERT	EACH	6				6	
			202	SANDBLASTING	M2	593				593	
			203	UNCLASSIFIED EXCAVATION (COMPLETE IN PLACE)	M3	42 040				42 040	
			203	POTHOLING	HOUR	40				40	
			206	STRUCTURE EXCAVATION	M3	802.8		162		964.8	
			206	STRUCTURE BACKFILL (FLOW FILL)	M3			87.2		87.2	
			206	STRUCTURE BACKFILL (CLASS 1)	M3	496.8		53.4		550.2	
			206	STRUCTURE BACKFILL (CLASS 2)	M3			26.2		26.2	
			206	FILTER MATERIAL (CLASS A)	M3	24.1				24.1	
			207	TOPSOIL	M3	3 723				3 723	
			208	EROSION BALES	EACH	265				265	
			208	SILT FENCE	M	1 845				1 845	
			208	STORM DRAIN INLET PROTECTION	EACH	5	5			5	
			208	SEDIMENT REMOVAL AND DISPOSAL	LS	1	1			1	
			208	EROSION CONTROL SUPERVISOR	LS	1	1			1	
			210	RESET END SECTION	EACH	1	1			1	

FELSBURG HOLT & ULLEVIG

C-470/YOSEMITE INTERCHANGE

SUMMARY OF APPROXIMATE QUANTITIES

DATE	PROJECT NO	DESIGNED BY	DRAWN BY	CHECKED BY	SHEET NO.	OF	SHEETS	DRAWING NO.
FEB 96	95-088	DB	SS	DB	1	6		SQ-1

AS CONSTRUCTED			
NO REVISIONS ☐	REVISED ☐	VOID ☐	

FEDERAL RD. REGION NO.	DIVISION	PROJ. NO.	SHEET NO.	TOTAL SHEETS
VIII	COLORADO	CC 4701-082	7	154

REVISIONS		

SUMMARY OF ~~APPROXIMATE~~ FINAL QUANTITIES

INDEX BOOK	INDEX PAGE	INDEX SHEET	CONTRACT ITEM NO.	CONTRACT ITEM	UNIT	ROADWAY PLAN	ROADWAY AS CONST.	STRUCTURE NO. F-17-HO PLAN	STRUCTURE NO. F-17-HO AS CONST.	PROJECT TOTALS PLAN	PROJECT TOTALS AS CONST.
			210	RESET OVERHEAD SIGN STRUCTURE	EACH	1				1	1
			210	RESET GROUND SIGN	EACH	6				6	
			210	RESET FENCE	M	695				695	
			210	~~RELAY RIPRAP~~	M3	2				2	
			210	~~MODIFY MANHOLE~~	EACH	1				1	
			212	SEEDING (NATIVE)	HA	3.5				3.5	
			213	MULCHING	HA	3.5				3.5	
			213	MULCH TACKIFIER	KG	386				386	
			214	DECIDUOUS TREE (50 MM CALIPER)	EACH	34				34	
			214	DECIDUOUS SHRUB (NO. 5 CONTAINER)	EACH	129				129	
			214	EVERGREEN TREE (2.4 METER) (BALL AND BURLAP)	EACH	65				65	
			214	EVERGREEN TREE (3 METER) (BALL AND BURLAP)	EACH	18				18	
			215	TRANSPLANT TREE (38 MM TO 75 MM CALIPER)	EACH	13				13	
			304	AGGREGATE BASE COURSE (CLASS 6)	T	7 014				7 014	
			403	HOT BITUMINOUS PAVEMENT (PATCHING) (ASPHALT)	T	200				200	
			403	HOT BITUMINOUS PAVEMENT (GRADING C) (ASPHALT) (C520)	T	1 424		29.2		1 453.2	
			411	EMULSIFIED ASPHALT (SLOW-SETTING)	L	316				316	
			412	CONCRETE PAVEMENT (240 MM)	M2	15 359				15 359	
			412	CONCRETE PAVEMENT (250 MM)	M2	7 171				7 171	
			502	STEEL PILING (HP 310 X 79)	M			103.4		103.4	
			503	DRILLED CAISSON (1072 MM)	M	15.0				15.0	
			503	DRILLED CAISSON (1222 MM)	M	6.7				6.7	
			504	MECHANICALLY STABILIZED EARTH WALL	M2	134.7				134.7	
			506	RIPRAP (GABIONS)	M3	5				5	
			506	RIPRAP (300 MM)	M3	22.5				22.5	
			506	RIPRAP (450 MM)	M3	56.7				56.7	
			507	CONCRETE SLOPE AND DITCH PAVING (REINFORCED)	M3			19		19	
			507	BITUMINOUS SLOPE & DITCH PAVING (ASPHALT)	T	5.0				5.0	
			514	PIPE RAILING	M	188.6				188.6	

FELSBURG HOLT & ULLEVIG

C-470/YOSEMITE INTERCHANGE

SUMMARY OF APPROXIMATE QUANTITIES

DATE	PROJECT NO.	DESIGNED BY	DRAWN BY	CHECKED BY	SHEET NO	OF	SHEETS	DRAWING NO.
FEB 96	95-088	DB	SS	DB	2	6		SQ-2

AS CONSTRUCTED			
NO REVISIONS ☐	REVISED ☐	VOID ☐	

FEDERAL RD REGION NO.	DIVISION	PROJ. NO.	SHEET NO.	TOTAL SHEETS
VIII	COLORADO	CC 4701-082	3	154

REVISIONS		

SUMMARY OF ~~APPROXIMATE~~ FINAL QUANTITIES

INDEX BOOK	INDEX PAGE	INDEX SHEET	CONTRACT ITEM NO.	CONTRACT ITEM	UNIT	ROADWAY PLAN	ROADWAY AS CONST.	STRUCTURE NO. F-17-HO PLAN	STRUCTURE NO. F-17-HO AS CONST.	PROJECT TOTALS PLAN	PROJECT TOTALS AS CONST.
			515	WATERPROOFING (MEMBRANE)	M2			259.9		259.9	
			518	BRIDGE COMPRESSION JOINT SEALER	M			14.0		14.0	
			518	WATERSTOP (300 MM)	M	11.5				11.5	
			601	CONCRETE CLASS B (BRIDGE)	M3			47.1		47.1	
			601	CONCRETE CLASS B (WALL)	M3	200.1		28.4		228.5	
			601	CONCRETE CLASS D (BRIDGE)	M3			80.9		80.9	
			601	STRUCTURAL CONCRETE COATING	M2	464.8		466.1		930.9	
			601	STRUCTURAL CONCRETE COATING (ANTI-GRAFFITI)	M2	634				634	
			602	REINFORCING STEEL	KG	7 542		10 139		17 681	
			602	REINFORCING STEEL (EPOXY COATED)	KG			6 519		6 519	
			603	450 MM REINFORCED CONCRETE PIPE	M	142.5				142.5	
			603	600 MM REINFORCED CONCRETE PIPE	M	92.5				92.5	
			603	900 MM REINFORCED CONCRETE PIPE	M	40				40	
			603	450 MM REINFORCED CONCRETE END SECTION	EACH	3				3	
			603	300 MM CORRUGATED STEEL PIPE	M	17				17	
			603	450 MM CORRUGATED STEEL PIPE	M	11				11	
			603	600 MM CORRUGATED STEEL PIPE	M	5				5	
			603	900 MM CORRUGATED STEEL PIPE	M	21.5				21.5	
			603	1500 MM CORRUGATED STEEL PIPE	M	7				7	
			603	200 MM PLASTIC PIPE	M	30.1				30.1	
			604	INLET TYPE C (2M)	EACH	2				2	
			604	INLET TYPE D (2M)	EACH	2				2	
			604	INLET TYPE D (4M)	EACH	1				1	
			604	INLET TYPE R L 4.5 (2M)	EACH	2				2	
			604	MANHOLE BOX BASE (6M)	EACH	2				2	
			605	GEOCOMPOSITE DRAIN WITHOUT PIPE	M2	181.0				181.0	
			606	GUARDRAIL TYPE 3 (1905 MM POST SPACING)	M	415.6				415.6	
			606	END ANCHORAGE TYPE 3D	EACH	4				4	
			606	END ANCHORAGE TYPE 3F	EACH	2				2	
			606	END ANCHORAGE TYPE 3G	EACH	1				1	
			606	END ANCHORAGE TYPE 3H	EACH	1				1	
			606	END ANCHORAGE (SLOTTED RAIL TERMINAL)	EACH	4				4	

FELSBURG HOLT & ULLEVIG

C-470/YOSEMITE INTERCHANGE				
SUMMARY OF APPROXIMATE QUANTITIES				
DATE: FEB 96	PROJECT NO.: 95-088	DESIGNED BY: DB DRAWN BY: SS CHECKED BY: DB	SHEET NO. 3 OF 6 SHEETS	DRAWING NO: SQ-3

AS CONSTRUCTED			
NO REVISIONS ☐	REVISED ☐	VOID ☐	

FEDERAL RD REGION NO.	DIVISION	PROJ NO.	SHEET NO.	TOTAL SHEETS
VIII	COLORADO	CC 4701-082	9	~~97~~

REVISIONS		

SUMMARY OF ~~APPROXIMATE~~ FINAL QUANTITIES

INDEX BOOK	INDEX PAGE	INDEX SHEET	CONTRACT ITEM NO.	CONTRACT ITEM	UNIT	ROADWAY PLAN	ROADWAY AS CONST.	STRUCTURE NO. F-17-HO PLAN	STRUCTURE NO. F-17-HO AS CONST.	PROJECT TOTALS PLAN	PROJECT TOTALS AS CONST.
			606	~~BRIDGE RAIL TYPE 4 SPECIAL~~	M			~~46~~		~~46~~	
			607	CORNER AND LINE BRACE POST	EACH	5	10			5	10
			607	FENCE COMBINATION WIRE WITH TREATED WOODEN POSTS	M	1 423	1 423			1 423	1 423
			607	FENCE (TEMPORARY)	M	276				276	
			608	CONCRETE SIDEWALK	M2	470				470	
			608	CONCRETE CURB RAMP	M2	61.6				61.6	
			608	CONCRETE BIKEWAY (150 MM)	M2	4 363				4 363	
			609	CURB AND GUTTER TYPE 2 (SECTION I-B)	M	218				218	
			609	CURB AND GUTTER TYPE 2 (SECTION II-B)	M	290				290	
			609	CURB TYPE 6 (SECTION M)	M	114				114	
			610	MEDIAN COVER MATERIAL (PATTERNED CONCRETE)	M2	297				297	
			612	DELINEATOR (FLEXIBLE) (TYPE I)	EACH	45				45	
			612	DELINEATOR (FLEXIBLE) (TYPE II)	EACH	3				3	
			613	50 MM ELECTRICAL CONDUIT	M			132.5		132.5	
			613	50 MM ELECTRICAL CONDUIT (PLASTIC)	M	540				540	
			613	50 MM ELECTRICAL CONDUIT (PLASTIC) (INSTALL ONLY)	M	105				105	
			613	75 MM ELECTRICAL CONDUIT (PLASTIC)	M	1 105				1 105	
			613	DIRECT - BURIAL CABLE	M	665				665	
			613	WIRING	LS	1				1	
			613	LIGHT STANDARD METAL (12.2 METER)	EACH	10				10	
			613	CONCRETE FOUNDATION PAD	EACH	10				10	
			~~613~~	~~LUMINAIRE HIGH PRESSURE SODIUM (250 WATT)~~	~~EACH~~	~~4~~				~~4~~	
			613	LUMINAIRE HIGH PRESSURE SODIUM (400 WATT)	EACH	10				10	
			614	SIGN PANEL (CLASS I)	M2	25.1				25.1	
			614	SIGN PANEL (CLASS II)	M2	13.2				13.2	
			614	SIGN PANEL (CLASS III)	M2	71.6				71.6	
			614	TIMBER SIGN POST ~~89~~ X ~~89~~ MM	M	16	16			16	
			614	TIMBER SIGN POST 140 X 140 MM	M	82	102			82	
			614	STEEL SIGN POST (U-3)	M	25	25			25	
			614	STEEL SIGN POST (W200 X 27)	M	19.1	19.1			19.1	

FELSBURG HOLT & ULLEVIG

C-470/YOSEMITE INTERCHANGE

SUMMARY OF APPROXIMATE QUANTITIES

DATE	PROJECT NO.	DESIGNED BY	DRAWN BY	CHECKED BY	SHEET NO	DRAWING NO.
FEB 96	95-088	DB	SS	DB	4 OF 6 SHEETS	SQ-4

AS CONSTRUCTED			
NO REVISIONS ☐	REVISED ☐	VOID ☐	

FEDERAL RD REGION NO.	DIVISION	PROJ. NO	SHEET NO.	TOTAL SHEETS
VIII	COLORADO	CC 4701-082	10	154

REVISIONS		

SUMMARY OF ~~APPROXIMATE~~ FINAL QUANTITIES

INDEX BOOK	INDEX PAGE	INDEX SHEET	CONTRACT ITEM NO.	CONTRACT ITEM	UNIT	ROADWAY PLAN	ROADWAY AS CONST.	STRUCTURE NO. F-17-HO PLAN	STRUCTURE NO. F-17-HO AS CONST.	PROJECT TOTALS PLAN	PROJECT TOTALS AS CONST.
			614	CONCRETE FOOTING (TYPE 3)	EACH	4				4	
			614	MODIFICATION OF SIGN LEGEND	LS	1				1	
			614	CANTILEVER STRUCTURE (7 TO LESS THAN 9 METER FRAME)	EACH	1				1	
			614	CANTILEVER STRUCTURE (9 TO LESS THAN 11 METER FRAME)	EACH	2				2	
			614	PEDESTRIAN SIGNAL FACE (400)	EACH	12				12	
			614	TRAFFIC SIGNAL FACE (300-300-300)	EACH	21				21	
			614	TRAFFIC SIGNAL FACE (300-300-300-300-300)	EACH	4				4	
			614	FIRE PREEMPTION UNIT AND TIMER	EACH	2				2	
			614	LOOP DETECTOR WIRE	M	840				840	
			614	TRAFFIC SIGNAL VEHICLE DETECTOR AMPLIFIER (LOOP TYPE) (4 CHANNEL)	EACH	5				5	
			614	TRAFFIC SIGNAL VEHICLE DETECTOR (MICRO TYPE)	EACH	24				24	
			614	TRAFFIC SIGNAL-LIGHT POLE STEEL(1 MAST ARM)(INSTALL ONLY)	EACH	2				2	
			614	TRAFFIC SIGNAL LIGHT-POLE STEEL(2 MAST ARM)(INSTALL ONLY)	EACH	2				2	
			614	TRAFFIC SIGNAL PEDESTAL POLE STEEL (INSTALL ONLY)	EACH	4				4	
			614	TRAFFIC SIGNAL CONTROLLER (TYPE 170)	EACH	2				2	
			615	EMBANKMENT PROTECTOR TYPE 3	EACH	1				1	
			615	EMBANKMENT PROTECTOR TYPE 5	EACH	1				1	
			618	PRESTRESSED CONCRETE I (G1370)	M			83.7		83.7	
			619	DN32 COPPER PIPE	M	6				6	
			619	DN15 PLASTIC PIPE	M	8 000				8 000	
			619	DN25 PLASTIC PIPE	M	330				330	
			619	DN50 PLASTIC PIPE	M	3 580				3 580	
			619	~~DN80 PLASTIC PIPE~~	M	~~70~~				~~70~~	
			619	DN100 PLASTIC PIPE	M	234				234	
			620	FIELD OFFICE (CLASS 2)	EACH	1				1	
			620	FIELD LABORATORY (CLASS 2)	EACH	1				1	
			620	SANITARY FACILITY	EACH	1				1	
			623	HOSE SWIVEL	EACH	6				6	
			623	HOSE BIB	EACH	6				6	
			623	DN25 EMITTER VALVE ASSEMBLY	EACH	19				19	
			623	DN15 FLUSH UNIT	EACH	30				30	
			623	DN15 AIR RELIEF UNIT	EACH	19				19	
			623	DN32 BACKFLOW PREVENTER	EACH	2				2	
			623	DN25 DRAIN VALVE	EACH	19				19	

FELSBURG HOLT & ULLEVIG

C-470/YOSEMITE INTERCHANGE

SUMMARY OF APPROXIMATE QUANTITIES

DATE	PROJECT NO	DESIGNED BY / DRAWN BY / CHECKED BY	SHEET NO.	DRAWING NO.
FEB 96	95-088	DB / SS / DB	5 OF 6 SHEETS	SQ-5

AS CONSTRUCTED			
NO REVISIONS ☐	REVISED ☐	VOID ☐	

FEDERAL RD REGION NO.	DIVISION	PROJ. NO.	SHEET NO.	TOTAL SHEETS
VIII	COLORADO	CC 4701-082	11	15

REVISIONS			
R-1	4/22/96	REMOVED ITEMS	GCH

SUMMARY OF ~~APPROXIMATE~~ FINAL QUANTITIES

INDEX BOOK	INDEX PAGE	INDEX SHEET	CONTRACT ITEM NO.	CONTRACT ITEM	UNIT	ROADWAY PLAN	ROADWAY AS CONST.	STRUCTURE NO. F-17-HO PLAN	STRUCTURE NO. F-17-HO AS CONST.	PROJECT TOTALS PLAN	PROJECT TOTALS AS CONST.
			623	CONTROL WIRE 24 VOLT	M	20 950				20 950	
			623	~~POWER SOURCE WIRE~~	~~M~~	~~215~~				215	
			623	DN25 QUICK-COUPLER VALVE	EACH	19				19	
			623	DN50 GATE VALVE	EACH	11				11	
			623	~~8 STATION AUTOMATIC CONTROLLER~~	~~EACH~~	~~2~~				~~2~~	
			623	~~12 STATION AUTOMATIC CONTROLLER~~	~~EACH~~	~~1~~				~~1~~	
			623	18 STATION AUTOMATIC CONTROLLER (FURNISH ONLY)	EACH	1				1	
			625	CONSTRUCTION SURVEYING	LS	.5		.5		1	
			625	CONSTRUCTION SURVEYING (HOURLY)	HR	25		25		50	
			626	MOBILIZATION	LS	1				1	
			627	PAVEMENT MARKING PAINT	L	20				20	
			627	EPOXY PAVEMENT MARKING	L	491				491	
			627	PREFORMED THERMOPLASTIC PAVEMENT MARKING (WORD-SYMBOL)	M2	2.4				2.4	
			627	PREFORMED THERMOPLASTIC PAVEMENT MARKING (X WALK-STOP LINE)	M2	137				137	
			~~629~~	~~SURVEY MONUMENT (TYPE 1)~~ R-1	~~EACH~~	~~9~~				~~9~~	
			~~629~~	~~SURVEY MONUMENT (TYPE 2)~~ R-1	~~EACH~~	~~8~~				~~8~~	
			~~629~~	~~SURVEY MONUMENT (TYPE 3A)~~ R-1	~~EACH~~	~~2~~				~~2~~	
			630	FLAGGING	HOUR	2000				2000	
			630	TRAFFIC CONTROL SUPERVISOR	DAY	120				120	
			630	TRAFFIC CONTROL INSPECTION	DAY	50				50	
			630	FLASHING BEACON (PORTABLE)	EACH	2				2	
			630	BARRICADE (TYPE 3M-A) (TEMPORARY)	EACH	13				13	
			630	CONSTRUCTION TRAFFIC SIGN (PANEL SIZE A)	EACH	21				21	
			630	CONSTRUCTION TRAFFIC SIGN (PANEL SIZE B)	EACH	49				49	
			630	CONSTRUCTION TRAFFIC SIGN (SPECIAL)	M2	9.9				9.9	
			630	ADVANCE WARNING FLASHING OR SEQUENCING ARROW PANEL (C TYPE)	EACH	6				6	
			630	DRUM CHANNELIZING DEVICE	EACH	120				120	
			630	CONCRETE BARRIER (TEMPORARY)	M	3 500				3 500	
			630	TRAFFIC CONE	EACH	200				200	
			630	~~MOBILE PAVEMENT MARKING ZONE~~	~~DAY~~	~~4~~				~~4~~	
			630	IMPACT ATTENUATOR(SAND FILLED PLASTIC BARREL)(TEMPORARY)	EACH	3				3	
				FORCE ACCOUNT ITEMS							
			700	F/A MINOR CONTRACT REVISIONS	FA	1				1	
			700	F/A OJT PILOT	FA	1				1	
			700	F/A QUALITY INCENTIVE PAYMENT	FA	1				1	
			700	F/A OBTAIN POWER FROM PUBLIC SERVICE CO.	FA	1				1	

FELSBURG HOLT & ULLEVIG

C-470/YOSEMITE INTERCHANGE

SUMMARY OF APPROXIMATE QUANTITIES

DATE	PROJECT NO.	DESIGNED BY	SHEET NO.	DRAWING NO.
FEB 96	95-088	DB	6	SQ-6
		DRAWN BY SS		
		CHECKED BY DB	OF 6 SHEETS	

SUMMARY OF ~~APPROXIMATE~~ FINAL QUANTITIES

AS CONSTRUCTED
NO REVISIONS ☐ REVISED 12-3-96 VOID ☐

CDOT | FED. ROAD REGION: VIII | DIVISION: COLO. | PROJ. NO.: CC 4701-082 | SHEET NO.: 11AX of 154

INDEX 900K	PAGE	SHEET	CONTRACT ITEM NO.	ADDED CONTRACT ITEM	UNIT	ROADWAY PLAN	ROADWAY AS CONST.	STRUCTURE PLAN	STRUCTURE AS CONST	PROJECT TOTALS PLAN	PROJECT TOTALS AS CONST.
3			900	CONCRETE PAVEMENT (SPECIAL) MCR 1-2	M2	530.0	863.8			530.0	863.8
3			900	PRICE REDUCTION (ABC CL 6) MCR 1-3	DOL	40.0	40.0			40.0	40.0
4			700	INCENTIVE PAYMENT (SPECIAL) CMO 2	F/A	180,000	180,000			180,000	180,000
4			203	BORROW (C I P) CMO 3	M3	8 080	8 141			8 080	8 141
4			210	RESET GUARDRAIL TY. 4 MCR 1-4	M	183	183			183	183
4			619	DN 150 PLASTIC PIPE MCR 1-5	M	30	28			30	28
4			900	REV SY MICRO LOOP DETECTOR MCR 1-7	LS	1	1			1	1
4			900	REVISE AUTOMATIC CONTROLLER MCR 1-8	LS	1	1			1	1
4			603	450 MM STEEL END SECTION MCR 1-9	EA	2	2			2	2
4			900	RESET WATER METER MCR 1-10	LS	1	1			1	1
4			210	MODIFY INLET MCR 1-11	EA	1	1			1	1
4			604	MANHOLE BOX BASE (4 M) MCR 1-12	EA	1	1			1	1
4			900	PRICE REDUCTION (ABC CL. 6) MCR 1-13	DOL	-80.00	-80.00			-80.00	-80.00
4			630	BARRICADE (TY. 3 F-D) (TEMP) MCR 1-14	EA	1	1			1	1
4			900	STEEL PILE CUT-OFF MCR 1-1	M			64	64	64	64
4			900	CONCRETE CORING (SPECIAL) MCR 1-6	LS			1	1	1	1
4			900	REVISION OF BRIDGE RAIL TY. 4 (SPECIAL) CMO 4	M			46	46	46	46

23-Oct-1995 JISK\DMELLINT\M113BA.DXF

AS CONSTRUCTED			
NO REVISIONS ☐	REVISED ☒	VOID ☐	

FEDERAL RD REGION NO.	DIVISION	PROJ NO	SHEET NO	TOTAL SHEETS
VIII	COLORADO	CC 4701-082	12	154

REVISIONS		

TABULATION OF STORM SEWER SYSTEM

INDEX BK	INDEX PG	INDEX SH	NOTE NO.	LOCATION	INLET EACH TYPE Ø R L4.5 H (PAY) 2	INLET EACH TYPE C H (PAY) 2	INLET EACH TYPE D H (PAY) 2	MANHOLE EACH BOX BASE H (PAY) 4	MANHOLE EACH MODIFY • MANHOLE H (PAY) 6		MEAS. HEIGHT (H) METERS	ELEVATIONS ▲RIM	ELEVATIONS INVERT	PIPE SEWER LINE FROM UPPER	PIPE SEWER LINE TO LOWER	PIPE SEWER INVERT ELEVATIONS LOWER	PIPE SEWER INVERT ELEVATIONS UPPER	PIPE SEWER % GRADE	PIPE SEWER CORRUGATED STEEL PIPE METERS 300	450	600	900	1500	PIPE SEWER REINFORCED CONCRETE PIPE METERS 450	600	900	REINFORCED CONC. END SECTION EACH 450	CONCRETE CLASS B (WALL) M3	REINFORCING STEEL KG	● STRUCTURE EXCAVATION M3	● STRUCTURE BACKFILL (CL. 1) M3	● STRUCTURE BACKFILL (CL. 2) M3	REMOVE STR AND OBSTRUCTIONS ★ LS	REM PORT OF PRESENT STR EA	CLEAN CULVERT EA	RELAY RIPRAP M3	RIPRAP (GABIONS) M3	EMB PROT TY 3 EA	EMB PROT TY 5 EA	CURB, TYPE 6 SECTION M M	REMOVE PIPE M	REMOVE END SECTION EA	BITUMINOUS SLOPE AND DITCH PAVING M TON	RESET END SECTION EA	RIPRAP (450 \mm) M3	FILTER MATERIAL (CLASS A) M3	MISC.
			P-D1	C-470 0+170 TO 0+223 RT																													1											
			P-D2	0+225 RT																													1											
			RR-D2	0+225, 29 RT																														2										
			P-E1	0+259 TO 0+304 RT																													1											
			P-E2	0+306 RT TO 0+316 LT																													1											
			EP-F1	0+310 ± LT						1									17																1		10			2.5		2.0	1.0	APRON TO BE RIPRAPED
			MH-G1	0+675, 13 RT EBCL						1	1.430	50.507 (EXIST.)	49.077 (EXIST.)	I-G2	MH-G1	49.077	49.250	3.5						5						7	1.5	3.5													MODIFY EXISTING MANHOLE
			I-G2	0+667, 10.5 RT EBCL		1					0.975	50.077	49.102																															
			I-G3	0+667 RT EBCL																																								REMOVE INLET TYPE C-1 EA. (REM. OF STR.)
			HW-H1	0+938 RT EBCL																															1	1								EXISTING HEADWALL, WINGWALLS, GABIONS
			HW-H2	0+932 14 RT EBCL										HW-H2	EXIST. 1500 CSP	45.288 (MATCH EXIST.)	45.425	1.96					7				14.4	697	0	11	0				5						28	6	HEADWALL & WINGWALLS WITH TOEWALLS
			P-H3	0+924 RT EBCL										EXIST. 450 CSP	HW-H2 WING-WALL	45.900	46.238 (MATCH EXIST.)	3.07		11									.0	4.5	0							8					
			EP-I1	0+970 ± RT EBCL																																		1	10		2.5				
			P-J1	1+180 RT																5									.0	2.6	.0			1						1	4.0	2.0	RIPRAP OUTLET
			ES-K1	1+529, 8 RT EBOR									63.515	I-K2	ES-K1	63.515	63.685	1.00					17			1			13.5	3.5	10.0										3.0	1.5	RIPRAP OUTLET
			I-K2	1+539.5, 7 LT EBOR			1				1.915	65.600	63.685																															
PAGE SUBTOTAL:					0	0	2	0	0	1									17	11	5	0	7	17	5	0	1	14.4	697	20.5	23.1	13.5	1	1	5	2	5	1	1	20	8	0	5.0	1	37.0	10.5	REMOVE STRUCTURE 1 EA.

▲ ELEVATION APPROXIMATE ONLY, ACTUAL ELEVATION TO BE DETERMINED DURING CONSTRUCTION.
✳ CONNECT NEW PIPE TO EXISTING MANHOLE
✳✳ INCLUDED IN COST OF CULVERT PIPE
● FOR INFORMATION ONLY, INCLUDED IN COST OF PIPE.
★ GABION BASKETS
Ø REFER TO M-604-12 FOR TYPE R INLET STATIONING POINT

NOTES
1. EBCL DENOTES EAST BOUND CONTROL LINE
2. WBCL DENOTES WEST BOUND CONTROL LINE
3. YCL DENOTES YOSEMITE ST. CONTROL LINE

OFFSET DISTANCE IS TO GUTTER FLOWLINE, RIM ELEVATION IS TO TOP OF CURB AT STATION/OFFSET POINT

FELSBURG HOLT & ULLEVIG

C-470/YOSEMITE INTERCHANGE
TABULATION OF STORM SEWER SYSTEM

DATE	PROJECT NO.	DESIGNED BY	DRAWN BY	CHECKED BY	SHEET NO.	OF	SHEETS	DRAWING NO.
FEB 96	95-088	EL	JW	DB	1	2		ST-1

AS CONSTRUCTED			
NO REVISIONS ☐	REVISED ☐	VOID ☐	

FEDERAL RD REGION NO	DIVISION	PROJ. NO	SHEET NO.	TOTAL SHEETS
VIII	COLORADO	CC 4701-082	13	154

REVISIONS		

TABULATION OF STORM SEWER SYSTEM

INDEX BK	INDEX PG	INDEX SH	NOTE NO.	LOCATION	INLET EACH TYPE ø R L4.5 H (PAY)	INLET EACH TYPE C H (PAY)	INLET EACH TYPE D H (PAY)	MANHOLE EACH BOX BASE H (PAY)	MANHOLE EACH MODIFY MANHOLE	MEAS. HEIGHT (H) METERS	ELEVATIONS ▲RIM	ELEVATIONS INVERT	PIPE SEWER LINE FROM UPPER	PIPE SEWER LINE TO LOWER	PIPE SEWER INVERT ELEVATIONS LOWER	PIPE SEWER INVERT ELEVATIONS UPPER	PIPE SEWER % GRADE	CORRUGATED STEEL PIPE METERS 300	450	600	900	1500	REINFORCED CONCRETE PIPE METERS 450	600	900	REINFORCED CONC. END SECTION EACH 450	CONCRETE CLASS B (WALL) M3	REINFORCING STEEL KG	STRUCTURE ● EXCAVATION M3	STRUCTURE ● BACKFILL (CL. 1) M3	STRUCTURE ● BACKFILL (CL. 2) M3	REMOVE STR AND OBSTRUCTIONS ★ LS	REM PORT OF PRESENT STR EA	CLEAN CULVERT EA	RELAY RIPRAP M3	RIPRAP (GABIONS) M3	EMB PROT TY 3 EA	EMB PROT TY 5 EA	CURB, TYPE 6 SECTION M M	REMOVE PIPE M	REMOVE END SECTION EA	BITUMINOUS SLOPE AND DITCH PAVING M TON	RESET END SECTION EA	RIPRAP (450 mm) M3	FILTER MATERIAL (CLASS A) M3	MISC.
			HW-A1	EASTBOUND OFFRAMP 1+737, 15 RT EBCL									MH-A2	HW-A1	62.800	63.400	1.5								40.0		2.0	0	1.60	47	100			(PIPE) (P-B1) 1						14	1 (ES-A2)			16.7	4.6	900 mm HEADWALL
			MH-A2	1+748.5, 25.5 LT EBCL				1		5.00	68.400	63.400	I-A3	MH-A2	63.44	63.70	0.37								70.0				3.85	23	55														CONNECT TO EXISTING CSP **
			I-A3	1+825, 16.5 LT EBCL		1				0.900	64.600	63.700																																
			ES-B1	WESTBOUND ONRAMP 1+838.5, 18 RT WBCL								67.960 (MATCH EXIST.)	I-B2	ES-B1	67.960	68.300	3.58				9.5									16	5	11									(ES-B1) 1				CONNECT TO EXISTING CSP **
			I-B2	1+847, 13 RT WBCL			1			2.500	70.800	68.300	ES-B3	I-B2	68.700	69.090	3.25				12.0									19	6	13									(ES-B3) 1				CONNECT TO EXISTING CSP **
													I-B4	I-B2	68.600	68.800	1.14							17.5				19	6	14													
			I-B4	1+848.5, 5.5 LT WBCL		1				0.900	69.700	68.800	I-B5	I-B4	68.800	70.100	9.63									13.5				12	3	9														CONTRACTOR TO FASHION INLET TO MATCH RETURN RADIUS
			I-B5	1+307.689 18.139 LT YCL	1					2.000	72.100	70.100																																
			MH-C1	YOSEMITE ST. SOUTH 1+046, 11.5 LT ± YCL			1			4.634	64.500	59.806	I-C2	MH-C1	60.800	64.800	4.00									100				190	23	62														
			I-C2	0+146.611 11.863 LT WBCL	1					1.943	66.743 (MATCH EXIST.)	64.800																																		CENTER OF INLET TO BE 3.350 M UPSTATION OF PCR
			P-AR1	ACCESS ROAD 0+132									(LT)	(RT)	65.270	65.330	0.5%								12			2													3.0	1.5	RIPRAP OUTLET
PAGE SUBTOTAL:					2	2	0	1	2	0								0	0	0	21.5	0	125.5	87.5	40	2	2.0	0	801	113	264	0	0	1	0	0	0	0	0	14	3	0	0	19.7	6.1	0
PROJECT TOTAL:					2	2	2	1	2	1								17	11	5	21.5	7	142.5	92.5	40	3	16.4	697	821.5	136.1	277.5	1	1	6	2	5	1	1	20	22	3	5.0	1	56.7	16.6	REMOVE STRUCTURE 1 EA.

▲ ELEVATION APPROXIMATE ONLY, ACTUAL ELEVATION TO BE DETERMINED DURING CONSTRUCTION.
✳ CONNECT NEW PIPE TO EXISTING MANHOLE
✳✳ INCLUDED IN COST OF CULVERT PIPE
● FOR INFORMATION ONLY, INCLUDED IN COST OF PIPE.
★ GABION BASKETS
ø REFER TO M-604-12 FOR TYPE R INLET STATIONING POINT.

NOTES

1. EBCL DENOTES EAST BOUND CONTROL LINE
2. WBCL DENOTES WEST BOUND CONTROL LINE
3. YCL DENOTES YOSEMITE ST. CONTROL LINE

OFFSET DISTANCE IS TO GUTTER FLOWLINE. RIM ELEVATION IS TO TOP OF CURB AT STATION/OFFSET POINT.

FELSBURG HOLT & ULLEVIG

C-470/YOSEMITE INTERCHANGE
TABULATION OF STORM SEWER SYSTEM

DATE	PROJECT NO.	DESIGNED BY	DRAWN BY	CHECKED BY	SHEET NO.	OF SHEETS	DRAWING NO.
FEB 96	95-088	EL	JW	DB	2	2	ST-2

AS CONSTRUCTED				
NO REVISIONS ☐	REVISED ☐	VOID ☐		

FEDERAL RD REGION NO.	DIVISION	PROJ. NO.	SHEET NO	TOTAL SHEETS
VIII	COLORADO	CC 4701-082	14	14

REVISIONS		

TABULATION OF REMOVALS, RESETS, ADJUSTS, & MODIFY

STATION/LOCATION (*)	SIDE	REMOVAL OF TREE ** EACH	REMOVAL OF SIDEWALK SQ. METER	REMOVAL OF CURB & GUTTER METER	REMOVAL OF CONCRETE PAVEMENT SQ. METER	REMOVAL OF ASPHALT MAT SQ. METER	REMOVAL OF ASPHALT MAT (PLANING) SQ. METER	REMOVAL OF FENCE METER	RESET FENCE METER	REMOVAL OF STRUCTURE EACH	COMMENTS
0+92 TO 0+220 W.B.C.L.	LEFT	2			164						
0+220 TO 0+570 W.B.C.L./W.B.O.R.	LEFT	14			348			139			
0+317 TO 0+565 E.B.C.L.	RIGHT	1			480						
0+570 TO 0+930 W.B.O.R.	LEFT	2	3700		450			360			
0+565 TO 0+916 E.B.C.L.	RIGHT	2			450						
0+930 TO 1+300 W.B.O.R.	LEFT		1128		462			370			
0+916 TO 1+278 E.B.C.L.	RIGHT				465						
1+300 TO 1+660 W.B.O.R.	LEFT		1103		105			391	190		
1+278 TO 1+632 E.B.C.L./E.B.O.R.	RIGHT & LEFT				448				160		
1+660 TO 1+854 W.B.O.R.	RIGHT & LEFT	6	640					307	100		
1+632 TO 1+875 E.B.O.R.	RIGHT & LEFT				90				245		
1+045 TO 1+150 Y.C.L.	LEFT		176	48		60					1 ADJUST MANHOLE } BY U.S. WEST 1 MODIFY MANHOLE } BY U.S. WEST
1+110 TO 1+123 Y.C.L.	RIGHT		18	12		7					
1+100 TO 1+200 Y.C.L.	RIGHT & LEFT						1950				
1+140 TO 1+200 Y.C.L.	MEDIAN			23						1	SOUTHGATE MANHOLE
1+200 TO 1+275 Y.C.L.	MEDIAN			80		154				1	SOUTHGATE MANHOLE
1+254 TO 1+377 Y.C.L.	LEFT	1	310	126		73					2 ADJUST MANHOLE BY U.S. WEST
1+200 TO 1+457 Y.C.L.	RIGHT & LEFT						5188			1	SOUTHGATE MANHOLE
1+178 TO 1+228 Y.C.L.	LEFT		50								SIDEWALK REMOVED TO FACILITATE TRAFFIC SIGNAL INTERCONNECT @ ABUTMENT
ACRES GREEN DRIVE			100								SIDEWALK REMOVED TO FACILITATE IRRGATION CONDUIT @ ABUTMENT
TOTALS		28	7225	289	3462	294	7138	1567	695	3	

(*) BPCL = BIKEPATH CONTROL LINE
WBCL = WESTBOUND CONTROL LINE
EBCL = EASTBOUND CONTROL LINE
WBOR = WESTBOUND ON RAMP CONTROL LINE
EBOR = EASTBOUND OFF RAMP CONTROL LINE
YCL = YOSEMITE CONTROL LINE

** FOR INFORMATION ONLY TO BE PAID AS CLEARING AND GRUBBING.

FELSBURG HOLT & ULLEVIG

C-470/YOSEMITE INTERCHANGE
TABULATION OF REMOVALS, RESETS, ADJUSTS AND MODIFY

DATE	PROJECT NO.	DESIGNED BY CH DRAWN BY DS CHECKED BY DB	SHEET NO. 1 OF 1 SHEETS	DRAWING NO.
FEB 96	95-088			ST-3

AS CONSTRUCTED			
NO REVISIONS ☐	REVISED ☐	VOID ☐	

FEDERAL RD REGION NO.	DIVISION	PROJ. NO	SHEET NO	TOTAL SHEETS
VIII	COLORADO	CC 4701-082	15	137

REVISIONS		

SUMMARY OF EARTHWORK

INDEX BOOK	PAGE	SHEET	ITEM	PROJECT TOTALS
			UNCLASSIFIED EXCAVATION (CIP)	CU M
			ROADWAY (FROM CROSS-SECTIONS)	
			EB C-470	4185
			WB C-470	539
			EB OFF RAMP	~~3843~~
			WB ON RAMP	~~5630~~
			YOSEMITE ST.	255
			ACCESS ROAD	1039
			SUBTOTAL	~~15 491~~
			ROADWAY (FROM SUBEXCAVATION)	
			EB C-470 / EB OFF RAMP	11 275
			WB C-470 / WB ON RAMP	~~14 884~~
			YOSEMITE ST.	390
			SUBTOTAL	~~26 549~~
			TOTAL FOR PAY QUANTITY	~~42 040~~
			COMPACTION (AASHTO T99) (INFO. ONLY) (MOISTURE & DENSITY CONTROL)	
			EMBANKMENT (NET)	11 325
			BASES OF CUTS & FILLS	7685
			SUBEXCAVATION	26 549
			TOTAL	45 559
			EMBANKMENT MATERIAL (NET) (INFO. ONLY)	
			ROADWAY (FROM CROSS SECTIONS)	
			EB C-470	344
			WB C-470	932
			EB OFF RAMP	~~8170~~
			WB ON RAMP	~~1879~~
			YOSEMITE ST.	0
			ACCESS ROAD	160
			SUBTOTAL	~~11 485~~
			SUBEXCAVATION	~~26 549~~
			TOTAL	~~38 034~~
			WETTING QUANTITIES (INFO. ONLY)	
			COMPACTION (45 559 X 115.78 L/M3)	L
			TOTAL	5 274 821
			ROADWAY QUANTITIES BALANCE (INFO. ONLY)	
			EMBANKMENT MATERIAL (NET)	38 034
			EMBANKMENT MATERIAL X FACTOR (1.10) (TOTAL FOR BALANCE)	41 837
			UNCLASSIFIED EXCAVATION (FROM ABOVE)	42 040
			LESS HAUL *	203
			BALANCE TOTAL	41 837

NOTE: THE EMBANKMENT MATERIAL SHALL HAVE A MINIMUM "R" VALUE OF 10.

* MATERIAL TO BECOME THE PROPERTY OF THE CONTRACTOR AND BE DISPOSED OF BY HIM.

TABULATION OF DELINEATORS

STATION	SIDE	REMOVAL OF DELINEATORS	DELINEATORS (FLEXIBLE)	
			TYPE I	TYPE II
		EACH	EACH	EACH
0+300 TO 1+395	EB/C-470	22	12	
1+395 TO 1+860	EB OFF RAMP	15	15	3
0+000 TO 1+060	WB/C-470	14	9	
1+060 TO 1+850	WB ON RAMP	13	9	
PROJECT TOTAL		64	45	3

~~RED 8~~
~~CRYSTAL 44~~

FENCING TABULATION

LOCATION	FENCE COMBINATION WITH TREATED WOODEN POSTS	CORNER AND LINE BRACE POST	FENCE (TEMPORARY) *
	METER	EACH	METER
0+200 TO 0+220 WBCL			21
0+220 TO 0+570 WBCL	140	1	35
0+570 WBCL TO 0+930 WBCL / WBOR	360	1	75
0+930 TO 1+300 WBOR	375	1	
1+300 TO 1+660 WBOR	360	1	
1+660 TO 1+854 WBOR	188	1	
0+515 TO 0+550 EBCL			33
0+680 TO 0+710 EBCL			27
1+040 TO 1+170 EBCL			85
PROJECT TOTAL	1423	5	276

* FENCE USED TO PROTECT EXISTING TREES. SEE LANDSCAPE PLAN FOR PLACEMENT.

TABULATION OF SANITARY SEWER SYSTEM

INDEX BK	PG	SH	NOTE NO.	LOCATION (YOSEMITE STREET STATIONING)	MANHOLE EACH SLAB BASE H (PAY)	ADJUST MANHOLE	MEASURE HEIGHT (H)	ELEVATIONS RIM	ELEVATIONS INVERT IN	ELEVATIONS INVERT OUT	PIPE SEWER LINE FROM	PIPE SEWER LINE TO	PIPE SEWER INVERT ELEVATIONS LOWER	PIPE SEWER INVERT ELEVATIONS UPPER	PIPE SEWER GRADE *	PIPE SEWER PVC METER 200mm	MISCELLANEOUS/ NOTES
					15	EACH	M	▲									
				1+128, 2.0 LT.							EXIST. MH	EXIST. MH	62.870	63.713	2.80	30.1	CONNECT 200mm PLASTIC PIPE TO EXISTING MH
				1+159, 5.0 LT.													CONNECT 200mm PLASTIC PIPE TO EXISTING MH
				PROJECT TOTAL												30.1	

PLUGGING OF EXISTING PVC PIPE SHALL BE INCIDENTAL TO NEW 200mm PVC.

FELSBURG HOLT & ULLEVIG

C-470/YOSEMITE INTERCHANGE

SUMMARY OF EARTHWORK, FENCING & DELINEATORS

DATE	PROJECT NO.	DESIGNED BY	DRAWN BY	CHECKED BY	SHEET NO.	OF	SHEETS	DRAWING NO.
FEB 96	95-088	CH	SS	DB	1	1		ST-4

AS CONSTRUCTED			
NO REVISIONS ☐	REVISED ☐	VOID ☐	

FEDERAL RD REGION NO.	DIVISION	PROJ NO.	SHEET NO.	TOTAL SHEETS
VIII	COLORADO	CC 4701-082	16	154

REVISIONS		

TABULATION OF SURFACING QUANTITIES

STATION/LOCATION (•)		HOT BITUMINOUS PAVEMENT-GRADING C (••) (ASPHALT) (C520) BOTTOM (90 mm) TONS	FINAL	SECOND (80 mm) TONS	FINAL	THIRD (80 mm) TONS	FINAL	TOP (50 mm) TONS	FINAL	(PATCHING) TONS	FINAL	EMULSIFIED ASPHALT (SLOW SETTING) L	FINAL	CONCRETE PAVEMENT (240 mm) M2	FINAL	(250 mm) M2	FINAL	AGGREGATE BASE COURSE (CLASS 6) TON	FINAL
0+092 to 0+220	WBCL													466				150	
0+220 TO 0+565	WBCL/WBOR													1594				467	
0+317 TO 0+565	EBCL													1351				386	
0+565 TO 0+930	WBOR													1989				569	
0+565 TO 0+916	EBCL													1917				548	
0+930 TO 1+300	WBOR													2833				750	
0+916 TO 1+278	EBCL													1973				563	
1+300 TO 1+660	WBOR													777		2271		885	
1+278 TO 1+632	EBCL/EBOR													2258		992		927	
1+660 TO 1+854	WBOR															1840		533	
1+632 TO 1+875	EBOR													201		2068		685	
1+100 TO 1+200	YCL							229		50		220							
1+200 TO 1+457	YCL	60		53		53		643		150		96							
ESTIMATE FOR IRREGULARITIES (10% OF BOTTOM LIFT)		6																	
ACCESS ROADS		114		101		101		64										551	
SUBTOTAL:		180		154		154		936		200		316		15 359		7171		7014	
PROJECT TOTALS:		1424								200		316		15 359		7171		7014	

PAVEMENT STABILIZATION DATA

	C-470	WB ON RAMP	EB OFF RAMP	YOSEMITE
20 YEAR 80KN ESAL	7 101 221	3 593 206	2 743 851	1 331 575
INITIAL SERVICEABILITY	4.5	4.5	4.5	4.5
TERMINAL SERVICEABILITY	2.5	2.5	2.5	2.5
PCC MODULUS OF RUPTURE (KPa)	4 481.6	4 481.6	4 481.6	
ELASTIC MODULUS OF SLAB (KPa)	23 442 100	23 442 100	23 442 100	
MEAN EFFECTIVE K-VALUE (KPa/mm)	15.75	15.75	15.75	
RELIABILITY LEVEL (%)	95	95	95	95
OVERALL STANDARD DEVIATION	.34	.34	.34	.44
LOAD TRANSFER COEFFICIENT	2.8	3.6	3.6	
OVERALL DRAINAGE COEFFICIENT	1	1	1	
ROADBED SOIL RESILIENT MODULUS (KPa)				20 857
WEIGHTED STR. NO. (WSN)				5.03

(•) BPCL = BIKEPATH CONTROL LINE
WBCL = WESTBOUND CONTROL LINE
EBCL = EASTBOUND CONTROL LINE
WBOR = WESTBOUND ON RAMP CONTROL LINE
EBOR = EASTBOUND OFF RAMP CONTROL LINE
YCL = YOSEMITE CONTROL LINE

(••) CONTRACTOR'S SOURCE

FELSBURG HOLT & ULLEVIG

C-470/YOSEMITE INTERCHANGE
TABULATION OF SURFACING QUANTITIES

DATE	PROJECT NO.	DESIGNED BY CH	SHEET NO. 1	DRAWING NO.
FEB 96	95-088	DRAWN BY JW CHECKED BY DB	OF 1 SHEETS	ST-5

AS CONSTRUCTED

NO REVISIONS ☐ REVISED ☐ VOID ☐

FEDERAL RD REGION NO	DIVISION	PROJ. NO.	SHEET NO.	TOTAL SHEETS
VIII	COLORADO	CC 4701-082	17	18A

REVISIONS		

TABULATION OF CURB & GUTTER, SIDEWALK, CURB RAMP, CURB, BIKEWAY, AND MEDIAN COVER MATERIAL

STATION (*)		SIDE	CURB & GUTTER, TYPE 2 SECTION I-B METER PLAN	CURB & GUTTER, TYPE 2 SECTION I-B METER FINAL	CURB & GUTTER, TYPE 2 SECTION II-B METER PLAN	CURB & GUTTER, TYPE 2 SECTION II-B METER FINAL	CONCRETE SIDEWALK SQ. METER PLAN	CONCRETE SIDEWALK SQ. METER FINAL	CONCRETE CURB RAMP SQ. METER PLAN	CONCRETE CURB RAMP SQ. METER FINAL	MEDIAN COVER MATERIAL (PATTERNED CONCRETE) SQ. METER PLAN	MEDIAN COVER MATERIAL (PATTERNED CONCRETE) SQ. METER FINAL	CURB TYPE 6 (SECTION M) METER PLAN	CURB TYPE 6 (SECTION M) METER FINAL	CONCRETE BIKEWAY (150 mm) SQ. METER PLAN	CONCRETE BIKEWAY (150 mm) SQ. METER FINAL
0+397.40 TO 0+563	BPCL	LT.													497	
0+563 TO 0+930	BPCL	LT.													1101	
0+930 TO 1+180	BPCL	LT.													750	
1+174 TO 1+300	WBOR	LT.													371	
1+042 TO 1+140	EBCL	RT.											94			
1+300 TO 1+660	WBOR	LT.													1083	
1+660 TO 1+854	WBOR	LT.													561	
0+996 TO 1+021	YCL	LT.			20		10		10.8							
1+045 TO 1+150	YCL	LT.			77		128		10.8							
1+110 TO 1+123	YCL	RT.					15		5.4		175					
1+140 TO 1+200	YCL	MEDIAN	66								122					
1+200 TO 1+275	YCL	MEDIAN	128													
1+254 TO 1+397	YCL	LT.	24		147		140		23.8							
1+178 TO 1+228 ••	YCL	LT.					50									
ACRES GREEN DRIVE •••							100									
ACCESS ROAD					46		27		10.8							
PROJECT TOTALS:			218		290		470		61.6		297		94		4363	

(*) BPCL = BIKEPATH CONTROL LINE
WBCL = WESTBOUND CONTROL LINE
EBCL = EASTBOUND CONTROL LINE
WBOR = WESTBOUND ON RAMP CONTROL LINE
EBOR = EASTBOUND OFF RAMP CONTROL LINE
YCL = YOSEMITE CONTROL LINE

•• SIDEWALK PLACED TO FACILITATE TRAFFIC SIGNAL INTERCONNECT CONDUIT ⊙ ABUTMENTS

••• SIDEWALK PLACED TO FACILITATE IRRIGATION CONDUIT ⊙ ABUTMENTS.

TABULATION OF GUARDRAIL AND BARRIER

STATION		SIDE	REMOVAL OF GUARDRAIL TYPE 3 METER PLAN	REMOVAL OF GUARDRAIL TYPE 3 METER FINAL	REMOVAL OF GUARDRAIL TYPE 4 METER PLAN	REMOVAL OF GUARDRAIL TYPE 4 METER FINAL	GUARDRAIL TYPE 3 (1905 mm POST SPACING) WOOD POSTS METER PLAN	GUARDRAIL TYPE 3 (1905 mm POST SPACING) WOOD POSTS METER FINAL	GUARDRAIL TYPE 3 (1905 mm POST SPACING) STEEL POSTS METER PLAN	GUARDRAIL TYPE 3 (1905 mm POST SPACING) STEEL POSTS METER FINAL	END ANCHORAGE TYPE 3D EACH PLAN	END ANCHORAGE TYPE 3D EACH FINAL	END ANCHORAGE SRT EACH PLAN	END ANCHORAGE SRT EACH FINAL	END ANCHORAGE TYPE 3G EACH PLAN	END ANCHORAGE TYPE 3G EACH FINAL	END ANCHORAGE TYPE 3H EACH PLAN	END ANCHORAGE TYPE 3H EACH FINAL	END ANCHORAGE TYPE 3F EACH PLAN	END ANCHORAGE TYPE 3F EACH FINAL
0+179.285 TO 0+243.614	WBCL	LT.					64.329				1						1			
0+306.706 TO 0+335.281	WBCL	LT.					28.575						1		1					
0+312 TO 0+342	WBCL	LT.	36																	
0+983.80 TO 1+131.25	EBCL	RT.	23		58				147.45		1		1							
0+792.615 TO 0+830.715	EBCL	RT.					38.10				1		1							
1+095.615 TO 1+194.53	EBCL	LT.					99.06												2	
1+168 TO 1+253	EBCL	LT.	46		52															
0+799.285 TO 0+837.385	WBORCL	LT.					38.10				1		1							
PROJECT TOTALS:			105		110		415.614				4		4		1		1		1	

FELSBURG HOLT & ULLEVIG

C-470/YOSEMITE INTERCHANGE
TABULATION OF CURB & GUTTER, SIDEWALK, GUARDRAIL AND BARRIER

DATE	PROJECT NO.	DESIGNED BY CH / DRAWN BY JW / CHECKED BY DB	SHEET NO. 1 OF 1 SHEETS	DRAWING NO.
FEB 96	95-088			ST-6

AS CONSTRUCTED					
NO REVISIONS [ ]	REVISED [ ]	VOID [ ]			

FEDERAL RD REGION NO.	DIVISION	PROJ NO.	SHEET NO.	TOTAL SHEETS
VIII	COLORADO	CC 4701-082	18	154

REVISIONS		

To establish geometric control for the construction of this project, the Department has provided the following information:

	Format*
■ Horizontal Control	CONTROL SURVEY DIAGRAM
■ Vertical Control	GENERAL NOTES
■ Roadway Alignment	PLAN SHEETS
■ Original Terrain Data	PLAN SHEETS
▭ Other:	

*Specify the information format, ie. plan sheet, computer disk, computer printout, or other.

The information marked is either contained on the plans or is available from the Engineer.

TYPE OF SURVEY

■ Item 625 - Construction
■ Item 629 - Monumentation

TYPE OF PROJECT

▭ Landscaping
■ Signalization
▭ Safety Improvement
■ Asphalt Overlay
▭ Concrete Overlay
■ Minor Widening
▭ Major Reconstruction
■ New Roadway Construction
▭ Bridge Replacement
■ Bridge Widening
▭ New Bridge (Abutment & Walls)
▭ Other:

WORK PERFORMED BY THE CONTRACTOR'S SURVEYOR UNDER ITEM 625:

___ ■ Verification and Maintenance of Horizontal and Vertical Control

___ ■ Verify or Determine existing grades and alignments

___ ■ Verify or Determine existing topography

___ ■ Clearing and Grubbing Limits

___ ■ Removal Limits

___ ■ Excavation and Embankment

	SLOPE STAKING	GRID	GRADE STAKES	SPECIAL INTERVAL
___ ■ Excavation				
___ ■ Unclassified	Yes	-	Yes	15m
___ ▭ Stripping	-	-	-	-
___ ▭ Muck	-	-	-	-
___ ▭ Rock	-	-	-	-
___ ▭ Borrow	-	-	-	-
___ ▭ Other:_____	-	-	-	-
___ ■ Embankment	Yes	-	Yes	15m
___ ■ Site Grading	Yes	-	Yes	15m
___ ▭ Erosion Control (Perm)	-	-	-	-
___ ▭ Other:_____	-	-	-	-

___ ■ Landscaping
___ ■ Top Soil
___ ■ Seeding
___ ■ Mulching
___ ▭ Planting
___ ▭ Other:_____

___ ■ Erosion Control
___ ▭ Seeding (Temp)
___ ■ Silt Fences
___ ■ Straw Bales
___ ■ Temporary Berm
___ ▭ Riprap (Temp)
___ ▭ Other (Temp Diversion, Temp Slope Drain, Bush Barrier, Check Dam, Other: Temp. Mulching)

___ ■ Roadway Bases

	BLUE TOPS	GRID	SPECIAL INTERVAL
___ ■ Untreated Subgrade	Yes	-	15m
___ ▭ Treated Subgrade	-	-	-
___ ▭ Aggregate Base Course	-	-	-
___ ▭ Other:_____	-	-	-

___ ■ Pavements

___ ▭ PMBB - Plant Mix Bituminous Base	-	-	-
___ ■ HBP - Hot Bituminous Pavement	Yes	-	15m
___ ■ Concrete	-	-	-
___ ▭ Other:_____			

___ ■ Roadway Elements
___ ■ Curb and Gutter
___ ■ Drop inlets - alignment and grades
___ ■ Retaining Walls
___ ■ Guard Rail
___ ■ Sidewalk
___ ▭ Other: Alignment For Concrete Barrier(Temp.)

___ ■ Riprap (Perm)

___ ▭ Slope and Ditch Paving

___ ■ Minor Structures
___ ■ Structure Excavation limits
___ ▭ Culverts
___ ■ Culverts w/ Headwalls and Wingwalls
___ ▭ Concrete Box Culverts w/ Headwalls and Wingwalls
___ ■ Pipes
___ ▭ Sanitary Sewer
___ ■ Storm Sewer
___ ▭ Water
___ ▭ Irrigation
___ ▭
___ ■ Manholes
___ ■ Inlets
___ ▭ Other:_____

___ ■ Major Structures - Signs, Concrete Box Culverts, Bridges - anything assigned a structure number
___ ■ Structure Excavation limits
___ ■ Concrete Box Culverts w/ Headwalls and Wingwalls
___ ■ Piling locations and cut off elevations
___ ■ Caisson locations and elevations
___ ■ Footing locations, alignment, and elevations
___ ■ Abutment alignment
___ ■ Abutment form locations
___ ■ Wingwall skew angles/offsets
___ ■ Structural concrete form locations
___ ■ Substructure survey (See Subsection 601.12(m))
___ ■ Bridge expansion joint(s) alignment and grade (longitudinal and transverse)
___ ■ Girder 10th or "n" th point locations and elevations
___ ■ Slope and Ditch Paving
___ ■ Other: Retaining Walls tie to Abutment

___ ■ Fencing
___ ■ Temporary
___ ■ Permanent
___ ▭ Sound Barriers
___ ▭ Other: Barrier Fence

___ ■ Delineators
___ ▭ Temporary
___ ■ Permanent

___ ■ Lighting and Traffic Control Devices (Perm)
___ ■ Signal pole locations and elevations
___ ■ Light pole locations and elevations
___ ■ Signs
___ ■ Field verify sign post locations, elevations, and lengths before fabrication
___ ▭ Other: Overhead Sign Structure

___ ■ Pavement Marking
___ ■ Striping (Temp)
___ ■ Striping (Perm)
___ ▭ Symbols
___ ▭ Other:_____

___ ■ Temporary Lighting and Construction Traffic Control Devices
___ ▭ Signal pole locations and elevations (Temp)
___ ▭ Light pole locations and elevations (Temp)
___ ■ Signs (Temp)
___ ▭ Other: Flashing Beacons

___ ■ Easement (Temp)(Staking)

WORK PERFORMED BY THE CONTRACTOR'S SURVEYOR UNDER ITEM 629:

___ ■ Monumentation
___ ■ Control
___ ■ Right of Way (Temp) (Staking)
___ ■ Right of Way
___ ▭ Land corners, Aliquot corners
___ ■ Easement (Temp)(Staking)
___ ▭ Easement (Perm)
___ ▭ Reference the specified existing monuments: _____
___ ■ Relocate the specified existing monuments: _____
___ ▭ Locate monuments. It is estimated that _____ hours are required and the hourly rate shall not exceed _____ per hour.

GENERAL NOTES:

All work shall be done in accordance with the CDOT Survey Manual.

Adequate information for establishing lines, grades, and locations for all work items have been specified on the plans. Any additional information required to stake the item or element shall be generated by the Contractor's surveyor.

The Contractor's surveyor shall provide an estimate of the man-hours necessary to complete the work items indicated on this sheet. A copy of this sheet, with the estimated man-hours written on the blank line to the left of the specified items, shall be submitted with the survey schedule to the Engineer at the Presurvey Conference.

If field books are used they will be furnished by the County at the Presurvey Conference.
The following surveying notebooks are required:
■ Alignment Notebook
■ Benchmark Notebook
■ Control Survey/Monumentation Notebook
■ Minor Structure Notebook
■ Major Structure Notebook
■ Slope Staking Notebook
■ Grade Notebook
■ Miscellaneous Notebook(s)

Stakes and Monuments set by CDOT forces which are damaged or destroyed by the progress of construction shall be replaced by the Contractor at no additional cost to the Department.

The Contractor shall furnish an "as staked" earth work quantity to the Engineer prior to completion of twenty percent (20%) of the planned earth work in any phase as per the CDOT Survey Manual.

The Contractor shall coordinate construction staking on the project with any utility work.

The Contractor shall perform any field surveying and calculations necessary to tie plan grades into field grades.

Chapter 5 of the Construction Survey Manual has been revised and is available in the bid plans room for a cost of $2.25. This revision increases the required accuracy and frequency of survey measurements.

OTHERS WHO WILL PERFORM WORK: _____

_____

COLORADO
DEPARTMENT OF TRANSPORTATION

SURVEY TABULATION SHEET

FELSBURG HOLT & ULLEVIG ■

C-470/YOSEMITE INTERCHANGE				
SURVEY TABULATION SHEET				
DATE: FEB 96	PROJECT NO.: 95-088	DESIGNED BY: ___ DRAWN BY: SS CHECKED BY: DB	SHEET NO. 1 OF 1 SHEETS	DRAWING NO.: ST-7

AS CONSTRUCTED			
NO REVISIONS	REVISED	VOID	

FEDERAL RD REGION NO.	DIVISION	PROJ. NO.	SHEET NO.	TOTAL SHEETS
VIII	COLORADO	CC 4701-082	19	154

REVISIONS		

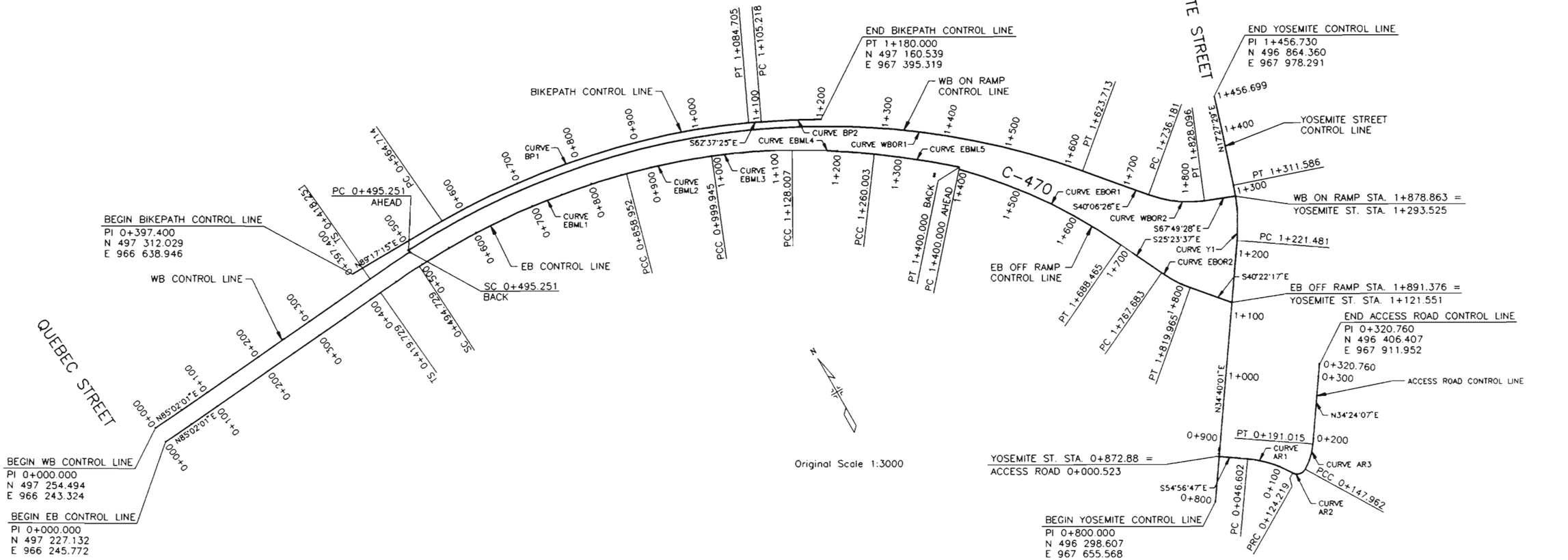

CURVE DATA

CURVE NO.	T_s (m)	E_s (m)	⊖	L_s	L.T.	T.S.	Δ_c	D_c	R_c	L_c	T_c	T_s NORTHING	T_s EASTING	SPI NORTHING	SPI EASTING	SC NORTHING	SC EASTING	PC / PCC NORTHING	PC / PCC EASTING	PI NORTHING	PI EASTING	PT / PCC NORTHING	PT / PCC EASTING
EB CONTROL LINE																							
EBML1	239.868	17.867	1°52'04"	75.000	50.003	25.003	18°08'32"	04°58'52"	1 150.270	364.223	183.648	497 263.470	966 663.926	497 267.798	966 713.741	497 269.150	966 738.707					497 231.410	967 099.441
EBML2							07°00'22"	04°58'06"	1 153.059	140.993	70.584							497 231.410	967 099.441	497 213.062	967 167.599	497 186.538	967 233.011
EBML3							08°36'01"	06°42'57"	853.160	128.062	64.152							497 186.538	967 233.011	497 162.919	967 292.656	497 130.646	967 348.099
EBML4							05°46'16"	05°07'47"	1 116.914	131.998	66.075							497 130.646	967 348.099	497 098.178	967 405.645	497 059.147	967 458.982
EBML5							05°17'56"	03°47'07"	1 513.605	139.996	70.048							497 059.147	967 458.982	497 017.849	967 515.541	496 971.502	967 568.064
EB OFF RAMP CONTROL LINE																							
EBOR1							18°53'20"	06°32'53"	875.000	288.465	145.553							496 968.776	967 565.678	496 864.573	967 667.303	496 733.083	967 729.721
EBOR2							14°58'40"	28°38'52"	200.000	52.282	26.291							496 661.519	967 763.692	496 637.768	967 774.986	496 617.736	967 791.996
WB CONTROL LINE																							
WBML1	217.997	13.809	1°52'24"	77.000	51.336	25.669	15°31'26"	04°51'56"	1 177.600	319.062	160.514	497 290.703	966 660.005	497 295.148	966 711.149	497 296.533	966 736.781					497 270.643	967 053.813
WB ON RAMP CONTROL LINE																							
WBOR1							52°54'36"	04°41'19"	1 222.001	1 128.462	608.070							497 300.128	966 738.587	497 332.133	967 343.814	496 867.056	967 735.544
WBOR2							27°43'02"	30°09'20"	190.000	91.914	46.875							496 781.036	967 807.998	496 745.184	967 838.195	496 727.491	967 881.603
YOSEMITE ST. CONTROL LINE																							
Y1							17°12'32"	19°05'55"	300.000	90.106	45.395							496 645.263	967 895.308	496 682.599	967 921.129	496 725.903	967 934.747
BIKEPATH CONTROL LINE																							
BP1							24°06'58"	04°38'16"	1 235.414	519.991	263.903							497 314.110	966 806.247	497 312.917	967 070.147	497 204.003	967 310.527
BP2							03°28'26"	04°38'43"	1 233.401	74.782	37.402							497 194.570	967 328.742	497 178.564	967 362.547	497 160.539	967 395.319
ACCESS ROAD CONTROL LINE																							
AR1							24°42'22"	31°49'52"	180.000	77.617	39.421							496 332.086	967 734.744	496 308.444	967 767.015	496 275.387	967 786.868
AR2							90°41'26"	381°58'19"	15.000	23.743	15.182							496 275.387	967 786.868	496 262.271	967 794.514	496 270.075	967 807.537
AR3							24°40'03"	57°17'45"	100.000	43.053	21.865							496 270.075	967 807.537	496 281.314	967 826.293	496 299.355	967 838.647

NOTE: WHOLE NUMBERS INDICATE MILLIMETERS
DECIMAL NUMBERS INDICATE METERS.

FELSBURG HOLT & ULLEVIG

C-470/YOSEMITE INTERCHANGE

GEOMETRIC PLAN

DATE	PROJECT NO.	DESIGNED BY	DRAWN BY	CHECKED BY	SHEET NO.	OF SHEETS	DRAWING NO.
FEB 96	95-088	DB	SS	DB	1	1	GP-1

FED. ROAD REGION	DIVISION	PROJECT NO.	SHEET NO.	TOTAL SHEETS
8	COLORADO	CC 4701-082	720	154

RIGHT-OF-WAY
C470 / YOSEMITE STREET INTERCHANGE PROJECT

REVISIONS		

R.O.W. TABULATION OF PROPERTIES IN DOUGLAS COUNTY – C470

PARCEL NO.	OWNER	ADDRESS	LOCATION T. 6 S., R. 67 W., 6th P.M.	AREA IN SQUARE METERS & SQUARE FEET: PARCEL	TO BE ACQUIRED	REMAINDER: LEFT	REMAINDER: RIGHT	PARCEL NO.	REMARKS
PARCEL 1	GERALD STARIKA & C-470 JOINT VENTURE	5675 DTC BLVD. SUITE #125	AN IRREGULAR TRACT OF	8839 S.M.	8839 S.M.	39300 S.M.		PARCEL 1	ROW PARCEL TO BE ACQUIRED BY WARRANTY DEED
	c/o DAVID NOTTINGHAM	ENGLEWOOD, COLORADO 80111	LAND IN THE NW 1/4	95143 S.F.	95143 S.F.	423014 S.F.			TO DOUGLAS COUNTY; REQUIRED TO CONSTRUCT INTERCHANGE
		(VACANT)	OF SECTION 3						RAMP WITH ASSOCIATED SLOPES, PAVING AND DRAINAGE FEATURES
PARCEL 2	PIER SET INC.	#2 PENN PLAZA, SUITE 1585, NY, NY 10121	AN IRREGULAR TRACT OF	1472 S.M.	1472 S.M.	66481 S.M.		PARCEL 2	ROW PARCEL TO BE ACQUIRED BY WARRANTY DEED TO DOUGLAS
		PROPERTY ADDRESS: 8585 S. YOSEMITE ST.	LAND IN THE NW 1/4	15842 S.F.	15842 S.F.	715595 S.F.			COUNTY; REQUIRED TO CONSTRUCT INTERCHANGE RAMP WITH
		LITTLETON, COLORADO 80124	OF SECTION 3						ASSOCIATED SLOPES, PAVING, BIKEPATH AND DRAINAGE FEATURES
PE-2	PIER SET INC.	#2 PENN PLAZA, SUITE 1585, NY, NY 10121	AN IRREGULAR TRACT OF	1658 S.M.	1658 S.M.			PE-2	PERMANENT EASEMENT TO BE DEDICATED BY GRANT OF EASEMENT AND
		PROPERTY ADDRESS: 8585 S. YOSEMITE ST.	LAND IN THE NW 1/4	17846 S.F.	17846 S.F.				EASEMENT AGREEMENT TO DOUGLAS COUNTY; REQUIRED FOR SLOPE
		LITTLETON, COLORADO 80124	OF SECTION 3						AND RETAINING WALL MAINTENANCE
TE-2	PIER SET INC.	#2 PENN PLAZA, SUITE 1585, NY, NY 10121	AN IRREGULAR TRACT OF	223 S.M.				TE-2	TEMPORARY EASEMENT TO BE DEDICATED BY GRANT OF TEMPORARY
		PROPERTY ADDRESS: 8585 S. YOSEMITE ST.	LAND IN THE NW 1/4	2397 S.F.					CONSTRUCTION EASEMENT TO DOUGLAS COUNTY; REQUIRED FOR
		LITTLETON, COLORADO 80124	OF SECTION 3						CONSTRUCTION OF RETAINING WALL
SE-3	PARK POWER PARTNERS LLC	1707 E. HIGHLAND SUITE 100	AN IRREGULAR TRACT OF	342 S.M.	342 S.M.			SE-3	SLOPE EASEMENT TO BE DEDICATED BY GRANT OF SLOPE EASEMENT
		PHOENIX, AZ 85016	LAND IN THE NW 1/4	3681 S.F.	3681 S.F.				TO DOUGLAS COUNTY; REQUIRED TO CONSTRUCT
		(VACANT)	OF SECTION 3						MAINTAIN SLOPES
SE-3A	PARK POWER PARTNERS LLC	1707 E. HIGHLAND SUITE 100	AN IRREGULAR TRACT OF	263 S.M.	263 S.M.			SE-3A	SLOPE EASEMENT TO BE DEDICATED BY GRANT OF SLOPE EASEMENT
		PHOENIX, AZ 85016	LAND IN THE NW 1/4	2835 S.F.	2835 S.F.				TO DOUGLAS COUNTY; REQUIRED TO CONSTRUCT
		(VACANT)	OF SECTION 3						AND MAINTAIN SLOPES
PE-4	VISSER REAL ESTATE INVESTMENT	133 E. 37TH AVE.	AN IRREGULAR TRACT OF	404 S.M.	404 S.M.			PE-4	PERMANENT EASEMENT TO BE DEDICATED BY GRANT OF EASEMENT AND
		DENVER, COLORADO 80239	LAND IN THE NW 1/4	4351 S.F.	4351 S.F.				EASEMENT AGREEMENT TO DOUGLAS COUNTY; REQUIRED TO CONSTRUCT
		(VACANT)	OF SECTION 3						AND MAINTAIN ACCESS ROAD
PE-5	ONE THIRTY LLC	8400 E. PRENTICE AVE., SUITE 740	AN IRREGULAR TRACT OF	6091 S.M.	6091 S.M.			PE-5	PERMANENT EASEMENT TO BE DEDICATED BY GRANT OF EASEMENT AND
		ENGLEWOOD, COLORADO 80111	LAND IN THE NW 1/4	65572 S.F.	65572 S.F.				EASEMENT AGREEMENT TO DOUGLAS COUNTY; REQUIRED TO CONSTRUCT
		(VACANT)	OF SECTION 3						AND MAINTAIN ACCESS ROAD

FED. ROAD REGION	DIVISION	PROJECT NO.	SHEET NO.	TOTAL SHEETS
8	COLORADO	CC 4701-082	21	154

RIGHT-OF-WAY

C-470/
YOSEMITE ST.
INTERCHANGE
PROJECT

REVISIONS

DEPARTMENT OF TRANSPORTATION–STATE OF COLORADO

SURVEY CONTROL DIAGRAM

PROJECT # CC 4701-081

C-470/YOSEMITE ST. INTERCHANGE PROJECT

LOCATED IN SECTIONS 3 AND 4, TOWNSHIP 6 SOUTH, RANGE 67 WEST OF THE 6TH PRINCIPAL MERIDIAN

COUNTY OF DOUGLAS, STATE OF COLORADO

QUANTITY OF MONUMENTS SET

CAP TYPE	MONUMENT TYPE							
	1	1A	2	2A	3	3A	4	5
REFERENCE								
RIGHT-OF-WAY								
CONTROL	1		7					5
ALIQUOT CORNER								
WITNESS CORNER								

LEGEND

- ◆ SECTION CORNER MONUMENT (AS NOTED)
- ◇ FOUND MONUMENT
- ⊙ FOUND CDOT CONTROL POINT
- △ SET CDOT MONUMENT
- – – – – – TRAVERSE LINE
- ——————— SECTION LINE

SEE SURVEY CONTROL AND MONUMENTATION SHEET FOR DESCRIPTIONS.

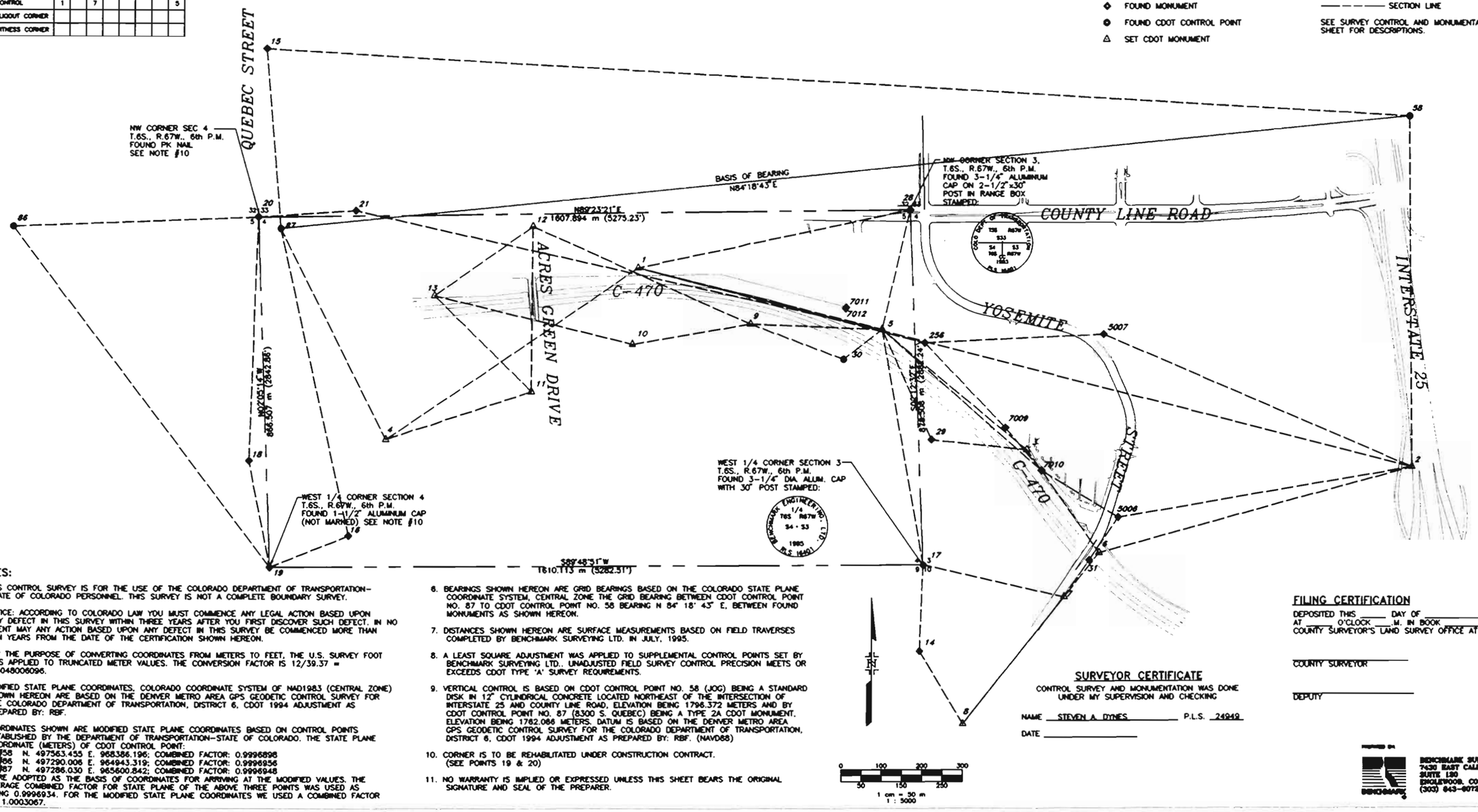

0 100 200 300
50 150 250
1 cm = 50 m
1 : 5000

NOTES:

1. THIS CONTROL SURVEY IS FOR THE USE OF THE COLORADO DEPARTMENT OF TRANSPORTATION–STATE OF COLORADO PERSONNEL. THIS SURVEY IS NOT A COMPLETE BOUNDARY SURVEY.
2. NOTICE: ACCORDING TO COLORADO LAW YOU MUST COMMENCE ANY LEGAL ACTION BASED UPON ANY DEFECT IN THIS SURVEY WITHIN THREE YEARS AFTER YOU FIRST DISCOVER SUCH DEFECT. IN NO EVENT MAY ANY ACTION BASED UPON ANY DEFECT IN THIS SURVEY BE COMMENCED MORE THAN TEN YEARS FROM THE DATE OF THE CERTIFICATION SHOWN HEREON.
3. FOR THE PURPOSE OF CONVERTING COORDINATES FROM METERS TO FEET, THE U.S. SURVEY FOOT WAS APPLIED TO TRUNCATED METER VALUES. THE CONVERSION FACTOR IS 12/39.37 = 0.3048006096.
4. MODIFIED STATE PLANE COORDINATES, COLORADO COORDINATE SYSTEM OF NAD1983 (CENTRAL ZONE) SHOWN HEREON ARE BASED ON THE DENVER METRO AREA GPS GEODETIC CONTROL SURVEY FOR THE COLORADO DEPARTMENT OF TRANSPORTATION, DISTRICT 6, CDOT 1994 ADJUSTMENT AS PREPARED BY: RBF.
5. COORDINATES SHOWN ARE MODIFIED STATE PLANE COORDINATES BASED ON CONTROL POINTS ESTABLISHED BY THE DEPARTMENT OF TRANSPORTATION–STATE OF COLORADO. THE STATE PLANE COORDINATE (METERS) OF CDOT CONTROL POINT:
   #58 N. 497563.455 E. 968386.196; COMBINED FACTOR: 0.9996898
   #86 N. 497290.006 E. 964943.319; COMBINED FACTOR: 0.9996956
   #87 N. 497286.030 E. 965600.842; COMBINED FACTOR: 0.9996948
   WERE ADOPTED AS THE BASIS OF COORDINATES FOR ARRIVING AT THE MODIFIED VALUES. THE AVERAGE COMBINED FACTOR FOR STATE PLANE OF THE ABOVE THREE POINTS WAS USED AS BEING 0.9996934. FOR THE MODIFIED STATE PLANE COORDINATES WE USED A COMBINED FACTOR OF 1.0003067.
6. BEARINGS SHOWN HEREON ARE GRID BEARINGS BASED ON THE COLORADO STATE PLANE COORDINATE SYSTEM, CENTRAL ZONE THE GRID BEARING BETWEEN CDOT CONTROL POINT NO. 87 TO CDOT CONTROL POINT NO. 58 BEARING N 84° 18' 43" E, BETWEEN FOUND MONUMENTS AS SHOWN HEREON.
7. DISTANCES SHOWN HEREON ARE SURFACE MEASUREMENTS BASED ON FIELD TRAVERSES COMPLETED BY BENCHMARK SURVEYING LTD. IN JULY, 1995.
8. A LEAST SQUARE ADJUSTMENT WAS APPLIED TO SUPPLEMENTAL CONTROL POINTS SET BY BENCHMARK SURVEYING LTD.. UNADJUSTED FIELD SURVEY CONTROL PRECISION MEETS OR EXCEEDS CDOT TYPE 'A' SURVEY REQUIREMENTS.
9. VERTICAL CONTROL IS BASED ON CDOT CONTROL POINT NO. 58 (JOG) BEING A STANDARD DISK IN 12" CYLINDRICAL CONCRETE LOCATED NORTHEAST OF THE INTERSECTION OF INTERSTATE 25 AND COUNTY LINE ROAD, ELEVATION BEING 1796.372 METERS AND BY CDOT CONTROL POINT NO. 87 (8300 S. QUEBEC) BEING A TYPE 2A CDOT MONUMENT. ELEVATION BEING 1782.088 METERS. DATUM IS BASED ON THE DENVER METRO AREA GPS GEODETIC CONTROL SURVEY FOR THE COLORADO DEPARTMENT OF TRANSPORTATION, DISTRICT 6, CDOT 1994 ADJUSTMENT AS PREPARED BY: RBF. (NAVD88)
10. CORNER IS TO BE REHABILITATED UNDER CONSTRUCTION CONTRACT. (SEE POINTS 19 & 20)
11. NO WARRANTY IS IMPLIED OR EXPRESSED UNLESS THIS SHEET BEARS THE ORIGINAL SIGNATURE AND SEAL OF THE PREPARER.

SURVEYOR CERTIFICATE

CONTROL SURVEY AND MONUMENTATION WAS DONE UNDER MY SUPERVISION AND CHECKING

NAME STEVEN A. DYNES P.L.S. 24949

DATE _____

FILING CERTIFICATION

DEPOSITED THIS ____ DAY OF _____, 19____, AT _____ O'CLOCK ___.M. IN BOOK _____ OF THE COUNTY SURVEYOR'S LAND SURVEY OFFICE AT PAGE _____.

_____
COUNTY SURVEYOR

_____
DEPUTY

PREPARED BY:
BENCHMARK SURVEYING, LTD.
7430 EAST CALEY AVENUE
SUITE 120
ENGLEWOOD, COLORADO 80111
(303) 843-0072

FED. ROAD REGION	DIVISION	PROJECT NO.	SHEET NO.	TOTAL SHEETS
8	COLORADO	CC 4701-082	22	154

REVISIONS

RIGHT-OF-WAY

C-470/
YOSEMITE ST.
INTERCHANGE
PROJECT

DEPARTMENT OF TRANSPORTATION-STATE OF COLORADO

CONTROL AND MONUMENTATION SHEET

PROJECT # CC 4701-081

C-470/YOSEMITE ST. INTERCHANGE PROJECT

LOCATED IN SECTIONS 3 AND 4, TOWNSHIP 6 SOUTH, RANGE 67 WEST
OF THE SIXTH PRINCIPAL MERIDIAN, COUNTY OF DOUGLAS, STATE OF COLORADO

'METERS'

NOTES:

◆ INDICATES FOUND ALIQUOT LAND CORNER

• INDICATES CONTROL POINT USED IN PREVIOUS PROJECT FOR CONCEPTUAL DESIGN THAT DOES NOT MEET THE PHYSICAL STANDARD FOR MONUMENT TYPES AS REQUIRED BY CDOT

SURVEY CONTROL POINT TABULATION (IN METERS)
MODIFIED STATE PLANE COORDINATES

	POINT	NORTHING (Y)	EASTING (X)	ELEVATION	DESCRIPTION
	1	497341.1152	966779.6713	1753.772	SET TYPE 5 CDOT MONUMENT N. OF PARKWAY DRIVE, 700' (213 m) E. OF ACRES GREEN DRIVE STAMPED 2.083082
	2	496847.4929	968690.2378	1800.959	SET TYPE 1 CDOT MONUMENT BETWEEN S. BOUND I-25 AND ON-RAMP FROM COUNTY LINE ROAD TO S.BOUND I-25 STAMPED 2.085100
	3	496890.6257	967738.4288	1773.042	SET TYPE 2 CDOT MONUMENT BETWEEN BIKE PATH AND FENCE SW OF 'INCREDIBLE UNIVERSE' PARKING LOT STAMPED 2.085090
	4	496917.6749	966159.2159	1767.763	SET TYPE 2 CDOT MONUMENT 6.0' (1.8 m) S. OF PARK MEADOWS DRIVE AND 800' (244 m) E. OF QUEBEC ST. STAMPED 2.085077
	5	497188.7318	967381.0092	1756.987	SET TYPE 5 CDOT MONUMENT 150' (46 m) S. OF PARKWAY DRIVE AND 700' (214 m) W. OF YOSEMITE ST. STAMPED 2.084088
	6	496636.0719	967916.1424	1773.573	SET TYPE 2 CDOT MONUMENT 40' (12m) E. OF YOSEMITE ST. AND 15' (5 m) N OF THE C-470 WESTBOUND BRIDGE STAMPED 2.086094
	7	496526.8417	967829.6718	1765.232	SET TYPE 2 CDOT MONUMENT 6' (2 m) E. OF YOSEMITE ST. AND 200' (61 m) S. OF THE C-470 EASTBOUND BRIDGE STAMPED 2.087092
	8	496212.4181	967581.3816	1766.186	SET TYPE 5 CDOT MONUMENT IN CONC. WALK AT SW CORNER OF MAXIMUS DRIVE AND YOSEMITE ST. STAMPED 2.089090
	9	497201.8674	967056.3749	1754.450	SET TYPE 2 CDOT MONUMENT 30' (9 m) S. OF THE FENCE ON THE S. SIDE OF C-470 AND 75' (23 m) E. OF 'QUEBEC ST 1/2 MILE' SIGN (SIGN ON N. SIDE OF C-470) STAMPED 2.084086
	10	497152.2439	966766.2857	1760.342	SET TYPE 5 CDOT MONUMENT IN TOP OF CURB ON THE N. SIDE OF PARK MEADOWS DRIVE 500' (152 m) E. OF ACRES GREEN DRIVE STAMPED 2.084082
	11	497035.9353	966515.3742	1757.719	SET TYPE 2 CDOT MONUMENT 25' (8 m) W. OF ACRES GREEN DRIVE AND 200' (61 m) S. OF PARK MEADOWS DRIVE STAMPED 2.085079
	12	497443.8082	966518.0807	1751.536	SET TYPE 5 CDOT MONUMENT IN CONC. WALK AT THE SE CORNER OF ACRES GREEN DRIVE AND COUNTY LINE ROAD STAMPED 2.083080
	13	497273.2150	966277.9947	1759.679	SET TYPE 2 CDOT MONUMENT 5' 2 m) N. OF LIGHT POLE ALONG N. EDGE OF C-470 WESTBOUND AND 150' (46 m) E OF THE OFF-RAMP TO QUEBEC ST. STAMPED 2.083076
	14	496393.2966	967474.9462	1760.785	FND. #5 REBAR WITH BENCHMARK SURVEYING LTD. CONTROL CAP STAMPED "BENCHMARK CONTROL POINT"
	15	497882.1572	965860.2033	1749.183	SET #5 REBAR WITH BENCHMARK SURVEYING LTD. CONTROL CAP STAMPED "BENCHMARK CONTROL POINT"
	16	496679.1650	966067.5917	1781.562	FND. #5 REBAR WITH BENCHMARK SURVEYING LTD. CONTROL CAP STAMPED "BENCHMARK CONTROL POINT"
◆	17	496606.5413	967483.6306	1750.532	W. 1/4 CORNER SEC. 3 FND. 3-1/4" ALUMINUM CAP WITH 30" POST LS 16401
	18	496865.0118	965821.3805	1770.807	SET #5 REBAR WITH BENCHMARK SURVEYING LTD. CONTROL CAP STAMPED "BENCHMARK CONTROL POINT"
◆	19	496601.3190	965873.5260	1766.970	W 1/4 CORNER SEC. 4 FND. 1-1/2" ALUMINUM CAP (NOT MARKED)
◆	20	497467.2510	965841.9667	1760.882	NW CORNER SEC. 4 FND. PK NAIL
	21	497482.6314	966083.0393	1760.388	SET #5 REBAR WITH BENCHMARK SURVEYING LTD. CONTROL CAP STAMPED "BENCHMARK CONTROL POINT"
◆	28	497484.3961	967449.7690	1754.243	NW CORNER SEC. 3 FND. 3-1/4" ALUMINUM CAP ON 2-1/2" x 30" POST IN RANGE BOX LS 16401
	29	496916.2070	967503.6924	1754.526	SET #5 REBAR WITH BENCHMARK SURVEYING LTD. CONTROL CAP STAMPED "BENCHMARK CONTROL POINT"
	30	497115.0213	967284.9336	1751.327	FND. TYPE 2 CDOT MONUMENT ON TOP OF BANK W. OF BIKE PATH ON S. END OF CONCRETE UNDERPASS UNDER C-470 AT WILLOW CREEK
	31	496617.9281	967891.6044	1768.586	CHISELED '+' ON WALK ON E. SIDE OF YOSEMITE ST. UNDER C-470 OVERPASS
	58	497716.0550	968683.1940	1796.372	FND. STANDARD DISK IN 12" CYLINDRICAL CONC. NE OF INTERSECTION OF I-25 AND COUNTY LINE ROAD STATION NAME: JOG
	86	497442.5220	965239.2610	1757.054	FND. TYPE 2A MONUMENT "8300 S. NIAGARA" STAMPED 2.083066
	87	497438.5450	965896.9860	1762.086	FND. TYPE 2A CDOT MONUMENT 23.5' (7 m) E. OF QUEBEC ST. AND 47.5' (14 m) S. OF COUNTY LINE ROAD STAMPED 2.083073
	•256	497155.2860	967487.2072	1759.640	FND. HUB AND TACK

PREPARED BY:
BENCHMARK SURVEYING, LTD.
7430 EAST CALEY AVENUE
SUITE 120
ENGLEWOOD, COLORADO 80111
(303) 843-8072

FED. ROAD REGION	DIVISION	PROJECT NO.	SHEET NO.	TOTAL SHEETS
8	COLORADO	CC 4701-082	23	154

REVISIONS

RIGHT-OF-WAY

C-470/
YOSEMITE ST.
INTERCHANGE
PROJECT

DEPARTMENT OF TRANSPORTATION-STATE OF COLORADO

CONTROL AND MONUMENTATION SHEET

PROJECT # CC 4701-081

C-470/YOSEMITE ST. INTERCHANGE PROJECT

LOCATED IN SECTIONS 3 AND 4, TOWNSHIP 6 SOUTH, RANGE 67 WEST
OF THE SIXTH PRINCIPAL MERIDIAN, COUNTY OF DOUGLAS, STATE OF COLORADO

'METERS'

NOTES:

◆ INDICATES FOUND ALIQUOT LAND CORNER

• INDICATES CONTROL POINT USED IN PREVIOUS PROJECT FOR CONCEPTUAL DESIGN THAT DOES NOT MEET THE PHYSICAL STANDARD FOR MONUMENT TYPES AS REQUIRED BY CDOT

SURVEY CONTROL POINT TABULATION (IN METERS)
MODIFIED STATE PLANE COORDINATES

POINT	NORTHING (Y)	EASTING (X)	ELEVATION	DESCRIPTION
806	496592.7164	967840.2367		FND. PIN & CAP LS #11330
815	496567.8316	967860.0864		FND. PIN & CAP LS #11330
897	496592.0679	967991.7146		FND. PIN & CAP LS #16401
898	496667.0349	967926.0472		FND. PIN & CAP LS #16401
900	496721.8741	967949.0884		FND. PIN & CAP LS #16401
901	496886.4011	968000.8309		FND. PIN & CAP LS #16401
1235	496805.4856	967575.4871		FND. PIN & CAP LS #11330
1240	496592.7164	967840.2367		FND. PIN & CAP LS #11330
1252	496829.4317	967570.1014		FND. PIN & CAP LS #11330
1431	496468.1031	967964.2239		FND. PIN & CAP LS#11330
1432	496416.5557	968015.6924		FND. PIN & CAP LS#11330
2025	496377.0390	968007.4715		FND. PIN & CAP LS#11330
•5006	496725.7578	967963.5614	1778.640	FND. HUB AND TACK
•5007	497176.7914	967927.3623	1776.277	FND. HUB AND TACK
•7009	496945.5856	967685.4740	1769.202	FND. 60D NAIL
•7010	496839.2708	967774.3490	1772.911	FND. 60D NAIL
•7011	497243.1164	967290.9458	1751.377	FND. 1-1/2" ALUMINUM CAP LS 12405
•7012	497240.1749	967290.1085	1751.292	FND. HUB & TACK
7016	497160.0536	967462.2799		FND. PIN & CAP LS #12405
7017	497105.4783	967497.7055		FND. PIN & CAP LS #20683
7018	497005.7756	967629.3506		FND. PIN & CAP LS #11330
7019	496891.9103	967740.3971		FND. PIN & CAP LS #20683
7020	496863.3119	967755.4361		FND. PIN & CAP LS #20683

PREPARED BY:
BENCHMARK SURVEYING, LTD.
7430 EAST CALEY AVENUE
SUITE 120
ENGLEWOOD, COLORADO 80111
(303) 643-8072

FED. ROAD REGION	DIVISION	PROJECT NO.	SHEET NO.	TOTAL SHEETS
8	COLORADO	CC 4701-082	24	154

REVISIONS

RIGHT-OF-WAY

C-470/
YOSEMITE ST.
INTERCHANGE
PROJECT

DEPARTMENT OF TRANSPORTATION-STATE OF COLORADO

CONTROL AND MONUMENTATION SHEET

PROJECT # CC 4701-081

C-470/YOSEMITE ST. INTERCHANGE PROJECT

LOCATED IN SECTIONS 3 AND 4, TOWNSHIP 6 SOUTH, RANGE 67 WEST
OF THE SIXTH PRINCIPAL MERIDIAN, COUNTY OF DOUGLAS, STATE OF COLORADO

'FEET'

NOTES:

◆ INDICATES FOUND ALIQUOT LAND CORNER

• INDICATES CONTROL POINT USED IN PREVIOUS PROJECT FOR CONCEPTUAL DESIGN THAT DOES NOT MEET THE PHYSICAL STANDARD FOR MONUMENT TYPES AS REQUIRED BY CDOT

SURVEY CONTROL POINT TABULATION (IN FEET)
MODIFIED STATE PLANE COORDINATES

	POINT	NORTHING (Y)	EASTING (X)	ELEVATION	DESCRIPTION
	1	1631693.3088	3171842.9716	5753.83	SET TYPE 5 CDOT MONUMENT N. OF PARKWAY DRIVE, 700' (213 m) E. OF ACRES GREEN DRIVE STAMPED 2.083082
	2	1630073.8163	3178111.2218	5908.65	SET TYPE 1 CDOT MONUMENT BETWEEN S. BOUND I-25 AND ON-RAMP FROM COUNTY LINE ROAD TO S. BOUND I-25 STAMPED 2.085100
	3	1630215.3278	3174988.4952	5617.06	SET TYPE 2 CDOT MONUMENT BETWEEN BIKE PATH AND FENCE SW OF "INCREDIBLE UNIVERSE" PARKING LOT STAMPED 2.085090
	4	1630304.0717	3169807.3608	5799.74	SET TYPE 2 CDOT MONUMENT 6.0' (1.8 m) S. OF PARK MEADOWS DRIVE AND 800' (244 m) E. OF QUEBEC ST. STAMPED 2.085077
	5	1631193.3642	3173815.8610	5764.38	SET TYPE 5 CDOT MONUMENT 150' (46 m) S. OF PARKWAY DRIVE AND 700' (214 m) W. OF YOSEMITE ST. STAMPED 2.084088
	6	1629380.1792	3175571.5439	5818.80	SET TYPE 2 CDOT MONUMENT 40' (12m) E. OF YOSEMITE ST. AND 15' (5 m) N OF THE C-470 WESTBOUND BRIDGE STAMPED 2.086094
	7	1629021.8131	3175287.8482	5791.43	SET TYPE 2 CDOT MONUMENT 6' (2 m) E. OF YOSEMITE ST. AND 200' (61 m) S. OF THE C-470 EASTBOUND BRIDGE STAMPED 2.087092
	8	1627990.2417	3174473.2495	5794.56	SET TYPE 5 CDOT MONUMENT IN CONC. WALK AT SW CORNER OF MAXIMUS DRIVE AND YOSEMITE ST. STAMPED 2.089090
	9	1631236.4600	3172750.7900	5756.06	SET TYPE 2 CDOT MONUMENT 30' (9 m) S. OF THE FENCE ON THE S. SIDE OF C-470 AND 75' (23 m) E. OF "QUEBEC ST 1/2 MILE" SIGN (SIGN ON N. SIDE OF C-470) STAMPED 2.084086
	10	1631073.6535	3171799.0557	5775.39	SET TYPE 5 CDOT MONUMENT IN TOP OF CURB ON THE N. SIDE OF PARK MEADOWS DRIVE 500' (152 m) E. OF ACRES GREEN DRIVE STAMPED 2.084082
	11	1630692.0644	3170975.8569	5766.78	SET TYPE 2 CDOT MONUMENT 25' (8 m) W. OF ACRES GREEN DRIVE AND 200' (61 m) S. OF PARK MEADOWS DRIVE STAMPED 2.085079
	12	1632030.2274	3170984.7364	5746.50	SET TYPE 5 CDOT MONUMENT IN CONC. WALK AT THE SE CORNER OF ACRES GREEN DRIVE AND COUNTY LINE ROAD STAMPED 2.083080
	13	1631470.5395	3170197.0543	5773.21	SET TYPE 2 CDOT MONUMENT 5' 2 m) N. OF LIGHT POLE ALONG N. EDGE OF C-470 WESTBOUND AND 150' (46 m) E OF THE OFF-RAMP TO QUEBEC ST. STAMPED 2.083076
	14	1628583.6739	3174124.0527	5776.84	FND. #5 REBAR WITH BENCHMARK SURVEYING LTD. CONTROL CAP STAMPED "BENCHMARK CONTROL POINT"
	15	1633468.3774	3168826.3503	5738.78	SET #5 REBAR WITH BENCHMARK SURVEYING LTD. CONTROL CAP STAMPED "BENCHMARK CONTROL POINT"
	16	1629521.5605	3169506.7571	5845.01	FND. #5 REBAR WITH BENCHMARK SURVEYING LTD. CONTROL CAP STAMPED "BENCHMARK CONTROL POINT"
◆	17	1629283.2942	3174152.5447	5743.20	W. 1/4 CORNER SEC. 3 FND. 3-1/4" ALUMINUM CAP WITH 30" POST LS 16401
	18	1630131.2929	3168698.9792	5809.72	SET #5 REBAR WITH BENCHMARK SURVEYING LTD. CONTROL CAP STAMPED "BENCHMARK CONTROL POINT"
◆	19	1629266.1608	3168870.0599	5797.13	W 1/4 CORNER SEC. 4 FND. 1-1/2" ALUMINUM CAP (NOT MARKED)
◆	20	1632107.1393	3168766.5191	5777.16	NW CORNER SEC. 4 FND. PK NAIL
	21	1632157.5999	3169557.4381	5775.54	SET #5 REBAR WITH BENCHMARK SURVEYING LTD. CONTROL CAP STAMPED "BENCHMARK CONTROL POINT"
◆	28	1632163.3895	3174041.4505	5755.38	NW CORNER SEC. 3 FND. 3-1/4" ALUMINUM CAP ON 2-1/2" x 30" POST IN RANGE BOX LS 16401
	29	1630299.2558	3174218.3641	5756.31	SET #5 REBAR WITH BENCHMARK SURVEYING LTD. CONTROL CAP STAMPED "BENCHMARK CONTROL POINT"
	30	1630951.5324	3173500.6530	5745.81	FND. TYPE 2 CDOT MONUMENT ON TOP OF BANK W. OF BIKE PATH ON S. END OF CONCRETE UNDERPASS UNDER C-470 AT WILLOW CREEK
	31	1629320.6525	3175491.0388	5802.44	CHISELED "+" ON WALK ON E. SIDE OF YOSEMITE ST. UNDER C-470 OVERPASS
	58	1632923.4238	3178088.1123	5893.60	FND. STANDARD DISK IN 12" CYLINDRICAL CONC. NE OF INTERSECTION OF I-25 AND COUNTY LINE ROAD STATION NAME: JOG
	86	1632026.0076	3166789.1421	5764.60	FND. TYPE 2A CDOT MONUMENT "8300 S. NIAGARA" STAMPED 2.083066
	87	1632012.9597	3168947.0282	5781.11	FND. TYPE 2A CDOT MONUMENT 23.5' (7 m) E. OF QUEBEC ST. AND 47.5' (14 m) S. OF COUNTY LINE ROAD STAMPED 2.083073
•	256	1631083.6342	3174164.2790	5773.09	FND. HUB AND TACK

PREPARED BY:
BENCHMARK SURVEYING, LTD.
7430 EAST CALEY AVENUE
SUITE 120
ENGLEWOOD, COLORADO 80111
(303) 843-0072

FED. ROAD REGION	DIVISION	PROJECT NO.	SHEET NO.	TOTAL SHEETS
8	COLORADO	CC 4701-082	75	154

REVISIONS

RIGHT-OF-WAY

C-470/
YOSEMITE ST.
INTERCHANGE
PROJECT

DEPARTMENT OF TRANSPORTATION-STATE OF COLORADO

CONTROL AND MONUMENTATION SHEET

PROJECT # CC 4701-081

C-470/YOSEMITE ST. INTERCHANGE PROJECT

LOCATED IN SECTIONS 3 AND 4, TOWNSHIP 6 SOUTH, RANGE 67 WEST
OF THE SIXTH PRINCIPAL MERIDIAN, COUNTY OF DOUGLAS, STATE OF COLORADO

'FEET'

NOTES:

◆ INDICATES FOUND ALIQUOT LAND CORNER

* INDICATES CONTROL POINT USED IN PREVIOUS PROJECT FOR CONCEPTUAL DESIGN THAT DOES NOT MEET THE PHYSICAL STANDARD FOR MONUMENT TYPES AS REQUIRED BY CDOT

SURVEY CONTROL POINT TABULATION (IN FEET)
MODIFIED STATE PLANE COORDINATES

POINT	NORTHING (Y)	EASTING (X)	ELEVATION	DESCRIPTION
806	1628904.2029	3175091.7281		FND. PIN & CAP LS #11330
815	1629156.2941	3175387.6334		FND. PIN & CAP LS #11330
897	1629235.8096	3175819.4835		FND. PIN & CAP LS #16401
898	1629481.7637	3175604.0399		FND. PIN & CAP LS #16401
900	1629661.6821	3175679.6343		FND. PIN & CAP LS #16401
901	1630201.4675	3175849.3927		FND PIN & CAP LS #16401
1235	1629935.9974	3174453.9106		FND. PIN & CAP LS #11330
1240	1629237.9371	3175322.5098		FND. PIN & CAP LS #11330
1252	1630014.5606	3174436.2410		FND. PIN & CAP LS #11330
1431	1628829.1016	3175729.2913		FND. PIN & CAP LS #11330
1432	1628659.9833	3175898.1508		FND. PIN & CAP LS #11330
2025	1628530.3354	3175871.1793		FND. PIN & CAP LS #11330
*5006	1629667.8620	3175727.1177	5835.42	FND. HUB AND TACK
*5007	1631154.1898	3175608.3545	5827.67	FND. HUB AND TACK
*7009	1630395.6421	3174814.7593	5804.46	FND. 60D NAIL
*7010	1630046.8409	3175106.3433	5816.63	FND. 60D NAIL
*7011	1631371.7912	3173520.3779	5745.98	FND. 1-1/2" ALUMINUM CAP LS 12405
*7012	1631362.1403	3173517.6309	5745.70	FND. HUB & TACK
7016	1631099.2760	3174082.4966		FND. PIN & CAP LS #12405
7017	1630920.2169	3174198.7220		FND. PIN & CAP LS #20683
7018	1630593.1155	3174631.2839		FND. PIN & CAP LS #11330
7019	1630219.5424	3174994.9527		FND. PIN & CAP LS #20683
7020	1630125.7158	3175044.2932		FND. PIN & CAP LS #20683

PREPARED BY:
BENCHMARK
BENCHMARK SURVEYING, LTD.
7430 EAST CALEY AVENUE
SUITE 120
ENGLEWOOD, COLORADO 80111
(303) 843-0072

FED. ROAD REGION	DIVISION	PROJECT NO.	SHEET NO.	TOTAL SHEETS
8	COLORADO	CC 4701-082	3	

REVISIONS

DEPARTMENT OF TRANSPORTATION–STATE OF COLORADO

RIGHT-OF-WAY

PROJECT # CC 4701–081
C–470/YOSEMITE ST. INTERCHANGE PROJECT
LOCATED IN SECTIONS 3 AND 4, TOWNSHIP 6 SOUTH, RANGE 67 WEST
OF THE SIXTH PRINCIPAL MERIDIAN, COUNTY OF DOUGLAS, STATE OF COLORADO

METERS

EASEMENT COORDINATES
POINTS TO BE STAKED FOR CONSTRUCTION

POINT NO.	NORTHING	EASTING
300	496372.4300	967724.9636
301	496352.8110	967729.0860
302	496335.0670	967754.3760
303	496174.1316	967641.4603
304	496277.7929	967808.5067
305	496355.8530	967756.1368
306	496302.7440	967833.6960
307	496408.9141	967906.3964
308	496404.2622	967917.7548
309	496295.9641	967843.5972
310	496267.5626	967814.7952
311	496258.9861	967820.0653
312	496244.6244	967796.6931
313	496262.6953	967785.5889
314	496312.6109	967738.6203
315	496330.1381	967713.6394
316	496327.2665	967693.7324
380	496936.0298	967697.4473
961	496941.7849	967700.8361
962	496897.9590	967743.3450

EASEMENT COORDINATES
POINTS TO BE STAKED FOR CONSTRUCTION

POINT NO.	NORTHING	EASTING
963	496895.9810	967743.2170
964	496866.0200	967758.9780
965	496776.1690	967837.1820
966	496749.9150	967869.2680
967	496734.6550	967910.9540
968	496741.7240	967918.9010
969	496768.9550	967927.4200
970	496767.9071	967931.6136
971	497030.8386	967596.4070
972	497034.8267	967599.4228
973	497076.0899	967544.8561
974	497072.1025	967541.8394
975	496970.4466	967672.9343
976	496965.9526	967668.3179
977	496758.2075	967859.1334
978	496737.9015	967914.6037
979	496471.7009	967756.5528
980	496481.3900	967742.8640
981	496501.8192	967756.9911

PARCEL COORDINATES
R.O.W. MARKERS TO BE SET (METERS)

POINT NO.	NORTHING	EASTING
949	496552.4209	967812.3690
950	496676.3690	967732.1200
951	496722.3700	967707.5430
952	496856.0840	967642.9625
953	496736.7888	967921.8271
955	496734.0790	967920.3349
957	496730.2553	967908.1671
958	496740.2370	967883.7739
960	496769.1407	967837.4080

FEET

EASEMENT COORDINATES
POINTS TO BE STAKED FOR CONSTRUCTION

POINT NO.	NORTHING	EASTING
300	1628515.2140	3174944.3179
301	1628450.8474	3174957.8430
302	1628392.6323	3175040.8153
303	1627864.6302	3174670.3578
304	1628204.7254	3175218.4091
305	1628460.8278	3175046.5921
306	1628286.5859	3175301.0510
307	1628634.9122	3175539.5690
308	1628619.6501	3175576.8337
309	1628264.3423	3175333.5351
310	1628171.1617	3175239.0405
311	1628143.0236	3175256.3308
312	1628095.9053	3175179.6505
313	1628155.1929	3175143.2196
314	1628318.9576	3174989.1235
315	1628376.4613	3174907.1652
316	1628367.0402	3174841.8538
380	1630364.2910	3174854.0417
961	1630383.1726	3174865.1598
962	1630239.3872	3175004.6244

EASEMENT COORDINATES
POINTS TO BE STAKED FOR CONSTRUCTION

POINT NO.	NORTHING	EASTING
963	1630232.8977	3175004.2044
964	1630134.6006	3175055.9136
965	1629839.8145	3175312.4879
966	1629753.6795	3175417.7568
967	1629703.6139	3175554.5216
968	1629726.8062	3175580.5944
969	1629816.1465	3175608.5438
970	1629812.7085	3175622.3023
971	1630675.3431	3174522.5454
972	1630688.4273	3174532.4396
973	1630823.8048	3174353.4153
974	1630810.7229	3174343.5179
975	1630477.2069	3174773.6186
976	1630462.4627	3174758.4728
977	1629780.8857	3175384.5070
978	1629714.2651	3175566.4957
979	1628840.9052	3175047.9569
980	1628872.6937	3175003.0463
981	1628939.7185	3175049.3948

PARCEL COORDINATES
R.O.W. MARKERS TO BE SET (FEET)

POINT NO.	NORTHING	EASTING
949	1629105.7344	3175231.0807
950	1629512.3873	3174967.7970
951	1629663.3089	3174887.1639
952	1630102.0019	3174675.2862
953	1629710.6146	3175590.1945
955	1629701.7242	3175585.2991
957	1629689.1791	3175545.3782
958	1629721.9275	3175465.3485
960	1629816.7559	3175313.2295

QUANTITY OF MONUMENTS TO BE SET

SYS. TYPE	MONUMENT TYPE					
	1	1A	2	2A	3	4
REFERENCE		8				
RIGHT OF WAY	9					
CONTROL						
ALIGNMENT POINTS				2		
WITNESS POINTS						

SURVEYOR CERTIFICATE (FIELD)

RIGHT OF WAY MONUMENTATION WAS DONE UNDER MY SUPERVISION AND CHECKED

NAME _____ PLS NO. _____

DATE _____

SURVEYOR CERTIFICATE (OFFICE)

R.O.W. PLANS AND LEGAL DESCRIPTIONS WERE PREPARED UNDER MY SUPERVISION AND CHECKED

NAME _____ PLS NO. _____

DATE _____

PREPARED BY:

BENCHMARK SURVEYING, LTD.
7430 EAST CALEY AVENUE
SUITE 120
ENGLEWOOD, COLORADO 80111
(303) 843-8072

PROJECT # CC 4701-081
C-470/YOSEMITE ST. INTERCHANGE PROJECT
LOCATED IN SECTIONS 3 AND 4, TOWNSHIP 6 SOUTH,
RANGE 67 WEST OF THE 6TH PRINCIPAL MERIDIAN
COUNTY OF DOUGLAS, STATE OF COLORADO
FED. ROAD REGION 8
DIVISION COLORADO
PROJECT NO. CC 4701-082
SHEET NO. 27
TOTAL SHEETS 154
RIGHT-OF-WAY MAP
C470/YOSEMITE ST.
INTERCHANGE PROJECT
REVISIONS
3/28/96 SHORTENED ACCESS CONTROL AC-5 LC
DETAIL PARCEL 2
P.O.B. PARCEL 2
Δ=79°14'55" R=10.000 m (32.81') L=13.831 m (45.38') CH BRG= N72°33'17"E
Δ=07°04'18" R=25.079 m (82.28') L=3.095 m (10.16') CH BRG= N28°50'21"E
S17°27'29"W 6.049 m (19.85')
Δ=08°18'41" R=289.561 m (950.00') L=42.004 m (137.81') CH.BRG. N21°36'49"E
Δ=17°43'01" R=177.400 m (582.02') L=54.856 m (179.97') CH BRG= S58°03'41"E
S67°44'44"E 26.356 m (86.47')
N41°02'17"W 102.269 m (335.53')
PARKWAY SUBDIVISION FILING NO. 3
1ST AMENDMENT
BLOCK 2
REC. NO. 9545667
LOT 1
LOT 4
LOT 5
SE-3 SE-3A PARK POWER PARTNERS LLC
1707 E. HIGHLAND SUITE 100
PHOENIX, AZ 85016
BOOK 1291 PAGE 598
SE-3 AREA = 342 SQ. METERS ± (3681 S.F. ±)
SE-3A AREA = 263 SQ. METERS ± (2835 S.F. ±)
② PE-2 TE-2 PIER SET INC.
#2 PENN PLAZA
SUITE 1585
NEW YORK, NY 10121
BOOK 1291 PAGE 2346
REC. NO. 9546732
PARCEL 2 AREA = 1472 SQ. METERS ± (15842 S.F. ±)
PE-2 AREA = 1658 SQ. METERS ± (17845 S.F. ±)
TE-2 AREA = 223 SQ. METERS ± (2397 S.F. ±)
10' (3.048 m) PUBLIC SERVICE COMPANY OF COLO. EASEMENT BK 1253 PG 690
NOTE: THE P.O.B. FOR TE-2 IS POINT #978, WHENCE THE NW CORNER SECTION 3 BEARS N31°54'36"W, 879.389 m (2885.13')
PARK MEADOWS TOWN CENTER
FILING NO. 1-A
1st AMENDMENT
REC. NO. 9535841
PARK MEADOWS CENTER DR.
YOSEMITE STREET
C-470
BOOK 1278 PAGE 1870 (ACCESS RIGHTS RESERVED)
NW COR SECTION 3 T.6S., R.67W., 6th P.M.
BK 543 PG 400 50' (15.240 m) NON-EXCLUSIVE ESMT TO SOUTHGATE WATER DISTRICT
STATE DEPARTMENT OF HIGHWAYS DIVISION OF HIGHWAYS STATE OF COLORADO BK 490 PG 157
STATE DEPARTMENT OF HIGHWAYS DIVISION OF HIGHWAYS STATE OF COLORADO BK 478 PG 120
P.O.B. SE-3
P.O.B. SE-3A
P.O.B. PARCEL 2 AND P.O.B. PE-2
BOA AC-2 PT. #960
BOA AC-1 PT. #952
EOA AC-8 PT. #879
EOA AC-2 PT. #723
BOA AC-8 PT. #880
EOA AC-7 PT. #400
BOA AC-7 PT. #898
BOA AC-6 PT. #818
EOA AC-6 PT. #816
EOA AC-1 PT. #806
P.O.B. PARCEL 1
P.O.B. PE-4
R.O.W. PRIOR TO 1995
PROPOSED R.O.W.
EXISTING R.O.W.
TRACT 1(A)
TRACT 1(B)
TRACT A
TRACT E
TRACT BA
PARKWAY SUBDIVISION FILING NO 2
REC. NO. 342829
PARK MEADOWS
FILING ONE
FIRST AMENDMENT
REC. NO. 353654
NW 1/4 SECTION 3 T. 6 S., R. 67 W.
NE 1/4 SECTION 4 T. 6 S., R. 67 W.
OWNER: ZELMAN MEADOWS MARKETPLACE LP BK 1308 PG 595 REC. NO. 9561176
① GERALD STARIKA &
C-470 JOINT VENTURE
c/o DAVID NOTTINGHAM
5675 DTC BLVD. #125
ENGLEWOOD, CO 80111
BOOK 503 PAGE 99
REC. NO. 318932
PARCEL 1 AREA = 8839 SQ METERS ± (95143 S.F. ±)
NOTE: POINT #806 TO NW CORNER SECTION 3: N17°51'42"W, 1043.709 m (3424.23')
SANFORD HOMES, INC. ESMT. BK 411 PG 997
(SEE SHEET 5)
LEGEND
BOA BEGINNING OF ACCESS
EOA END OF ACCESS
AC-2 ACCESS PARCEL NO
m METRIC DISTANCE
972 PIN TO BE SET
7018 FOUND PIN
29 SET MONUMENT OR PIN
2025 CALCULATED POSITION
INDICATES BEARING AND DISTANCE FROM NW CORNER SECTION 3 T.6S., R.67W., 6th P.M., TO P.O.B
TOP OF CUT
TOE OF FILL
1 cm = 10 m
1 : 1000
PREPARED BY
BENCHMARK SURVEYING, LTD
7430 EAST CALEY AVENUE
SUITE 120
ENGLEWOOD, COLORADO 80111
(303) 843-6072

FED. ROAD REGION	DIVISION	PROJECT NO	SHEET NO	TOTAL SHEETS
8	COLORADO	CC 4701-081	2 7A	154

REVISIONS		
3/28/96	SHORTENED ACCESS CONTROL AC-5	LC
6/17/96	REVISED PE-4	LC
7/15/96	ADDED NOTE (TO BE CONVEYED..)	MG

PROJECT # CC 4701-081
C-470/YOSEMITE ST. INTERCHANGE PROJECT
LOCATED IN SECTIONS 3 AND 4, TOWNSHIP 6 SOUTH, RANGE 67 WEST OF THE 6TH PRINCIPAL MERIDIAN
COUNTY OF DOUGLAS, STATE OF COLORADO

RIGHT-OF-WAY MAP
C470/YOSEMITE ST.
INTERCHANGE PROJECT

NOTE: PE-2, SE-3 AND SE-3A ARE TO BE CONVEYED TO CDOT.

PARKWAY SUBDIVISION FILING NO. 3
1ST AMENDMENT
BLOCK 2
REC. NO. 9545667

PARK MEADOWS TOWN CENTER
FILING NO. 1-A
1st AMENDMENT
REC. NO. 9535841

SE-3 / SE-3A — PARK POWER PARTNERS LLC
1707 E. HIGHLAND SUITE 100
PHOENIX, AZ 85016
BOOK 1291 PAGE 598

SE-3 AREA = 342 SQ. METERS ± (3681 S.F. ±)
SE-3A AREA = 263 SQ. METERS ± (2835 S.F. ±)

PE-2 / TE-2 — ② PIER SET INC.
#2 PENN PLAZA
SUITE 1585
NEW YORK, NY 10121
BOOK 1291 PAGE 2346
REC. NO. 9546732

PARCEL 2 AREA = 1472 SQ. METERS ± (15842 S.F. ±)
PE-2 AREA = 1658 SQ. METERS ± (17845 S.F. ±)
TE-2 AREA = 223 SQ. METERS ± (2397 S.F. ±)

NOTE: THE P.O.B. FOR TE-2 IS POINT #978, WHENCE THE NW CORNER SECTION 3 BEARS N31°54'30"W, 879.389 m (2885.13')

① GERALD STARIKA & C-470 JOINT VENTURE
c/o DAVID NOTTINGHAM
5675 DTC BLVD. #125
ENGLEWOOD, CO 80111
BOOK 503 PAGE 99
REC. NO. 318932
PARCEL 1 AREA = 8839 SQ. METERS ± (95143 S.F. ±)

MONUMENTED BY: BENCHMARK SURVEYING, LTD.
7430 EAST CALEY AVENUE
SUITE 120
ENGLEWOOD, COLORADO 80111
(303) 843-8072

1 cm = 10 m
1 : 1000

LEGEND

BOA	BEGINNING OF ACCESS
EOA	END OF ACCESS
AC-7	ACCESS PARCEL NO
m	METRIC DISTANCE
972●	PIN TO BE SET
7018⊕	FOUND PIN
29 o	SET MONUMENT OR PIN
2075+	CALCULATED POSITION
	INDICATES BEARING AND DISTANCE FROM NW CORNER SECTION 3 T.6S., R.67W., 6th P.M., TO P.O.B.
——	TOP OF CUT
——	TOE OF FILL

(SEE SHEET 5)

FED. ROAD REGION	DIVISION	PROJECT NO.	SHEET NO.	TOTAL SHEETS
8	COLORADO	CC 4701-082	28	154

PROJECT # CC 4701-081
C-470/YOSEMITE ST. INTERCHANGE PROJECT
LOCATED IN SECTIONS 3 AND 4, TOWNSHIP 6 SOUTH, RANGE 67 WEST OF THE 6TH PRINCIPAL MERIDIAN COUNTY OF DOUGLAS, STATE OF COLORADO

RIGHT-OF-WAY MAP
C470/YOSEMITE ST.
INTERCHANGE PROJECT

REVISIONS

3/28/96	SHORTENED ACCESS CONTROL AC-5	LC

(SEE SHEET 4)

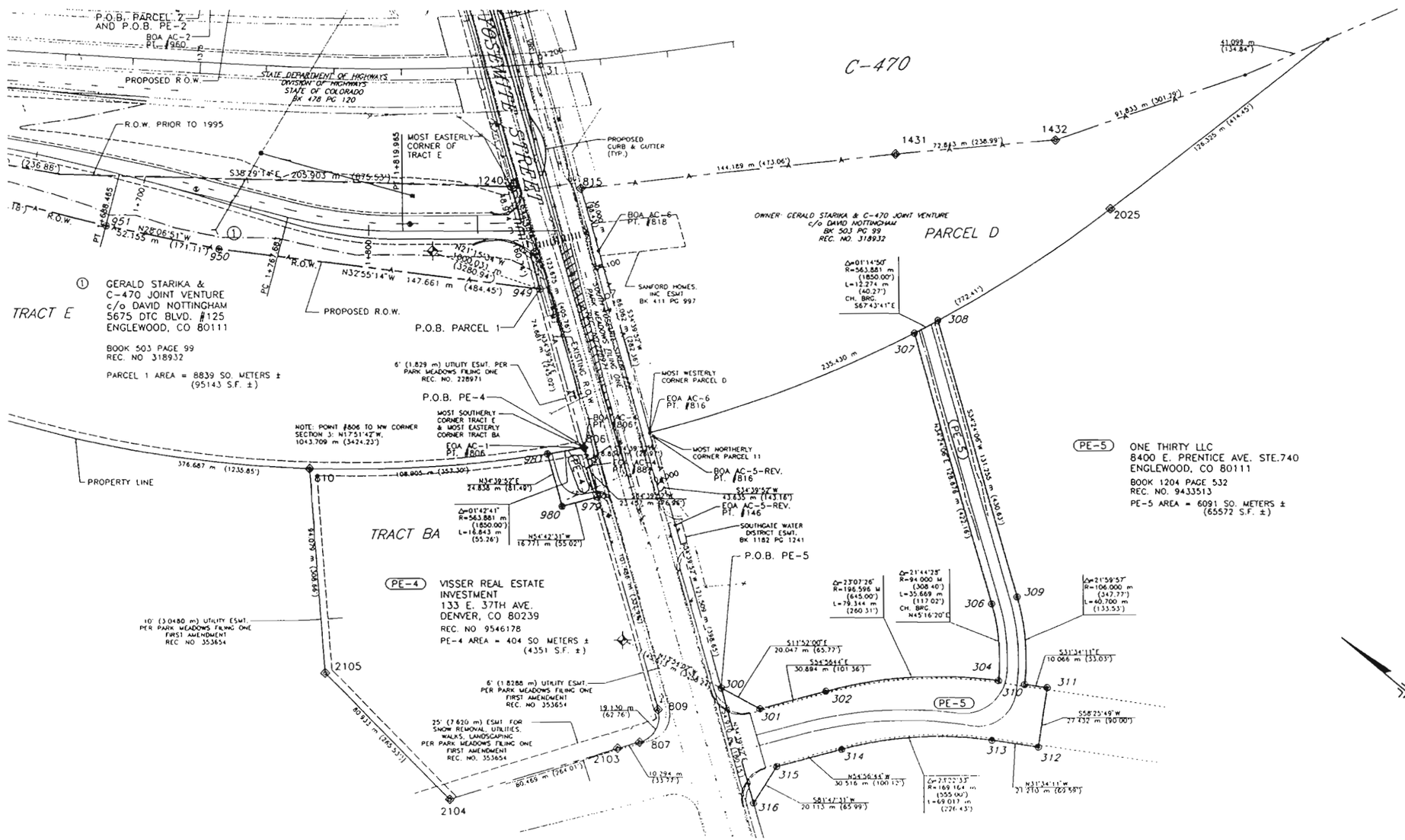

LEGEND

BOA	BEGINNING OF ACCESS
EOA	END OF ACCESS
AC-2	ACCESS PARCEL NO.
m	METRIC DISTANCE
972 ⊗	PIN TO BE SET
7018 ◆	FOUND PIN
29 ○	SET MONUMENT OR PIN
2025 •	CALCULATED POSITION
	INDICATES BEARING AND DISTANCE FROM NW CORNER SECTION 3 T.6S., R.67W., 6th P.M., TO P.O.B.
----	TOP OF CUT
——	TOE OF FILL

0 20 40 60
10 30 50
1 cm = 10 m
1 : 1000

PREPARED BY
BENCHMARK
BENCHMARK SURVEYING, LTD
7430 EAST CALEY AVENUE
SUITE 120
ENGLEWOOD, COLORADO 80111
(303) 843-6072

FED. ROAD REGION	DIVISION	PROJECT NO.	SHEET NO.	TOTAL SHEETS
8	COLORADO	CC 4701-081	28A	154

REVISIONS		
3/28/96	SHORTENED ACCESS CONTROL AC-5	LC
6/17/96	REVISED PE-4	LC

PROJECT # CC 4701-081
C-470/YOSEMITE ST. INTERCHANGE PROJECT
LOCATED IN SECTIONS 3 AND 4, TOWNSHIP 6 SOUTH, RANGE 67 WEST OF THE 6TH PRINCIPAL MERIDIAN COUNTY OF DOUGLAS, STATE OF COLORADO

RIGHT-OF-WAY MAP
C470/YOSEMITE ST.
INTERCHANGE PROJECT

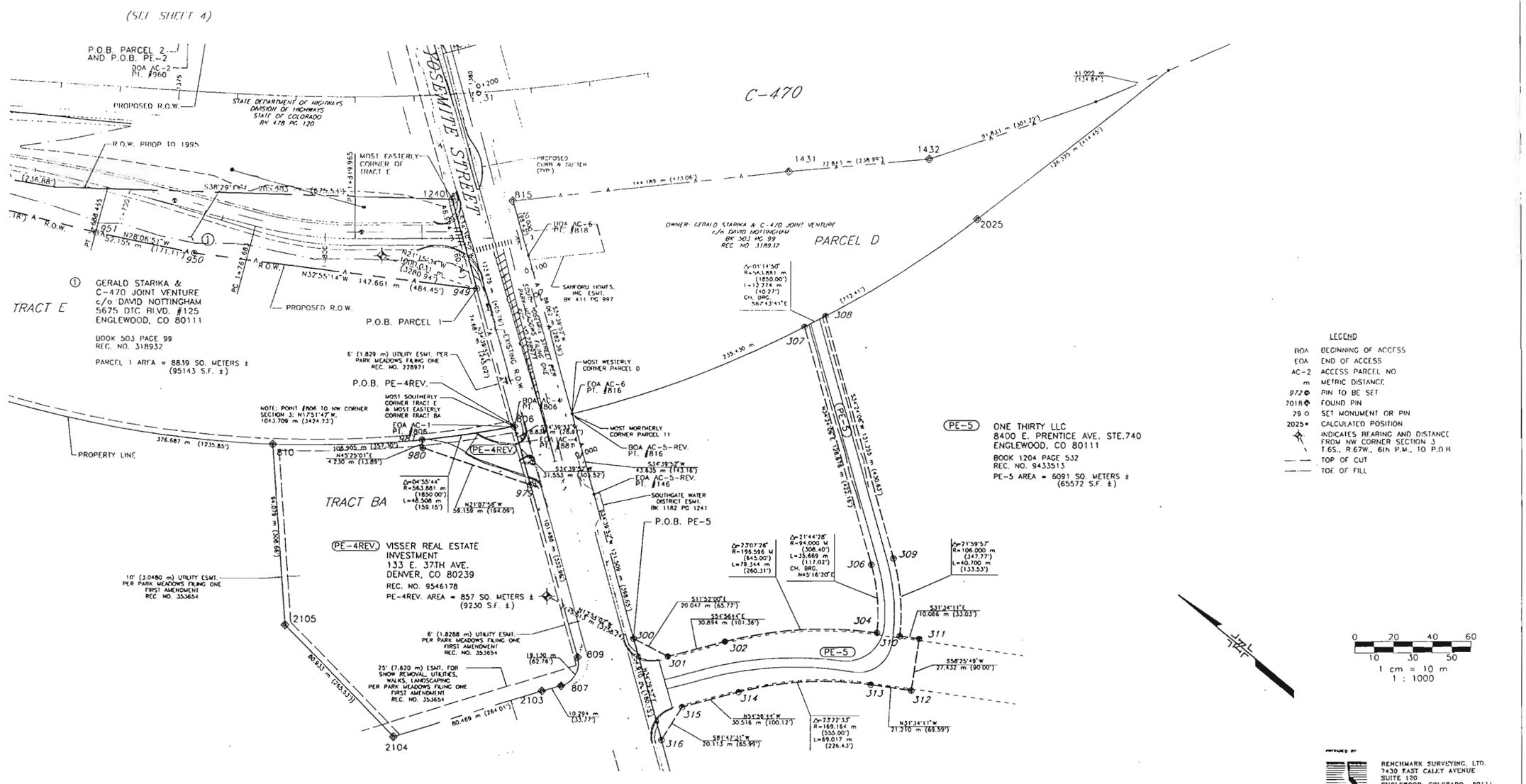

PREPARED BY:
BENCHMARK SURVEYING, LTD.
7430 EAST CALEY AVENUE
SUITE 120
ENGLEWOOD, COLORADO 80111
(303) 843-8072

FED. ROAD REGION	DIVISION	PROJECT NO.	SHEET NO.	TOTAL SHEETS
8	COLORADO	CC 4701-082	29	454

PROJECT # CC 4701-081
C-470/YOSEMITE ST. INTERCHANGE PROJECT
LOCATED IN SECTIONS 3 AND 4, TOWNSHIP 6 SOUTH, RANGE 67 WEST OF THE 6TH PRINCIPAL MERIDIAN
COUNTY OF DOUGLAS, STATE OF COLORADO

OVERALL OWNERSHIP MAP
C470/YOSEMITE ST INTERCHANGE PROJECT

REVISIONS		
3/28/98	SHORTENED ACCESS CONTROL AC-5	LC

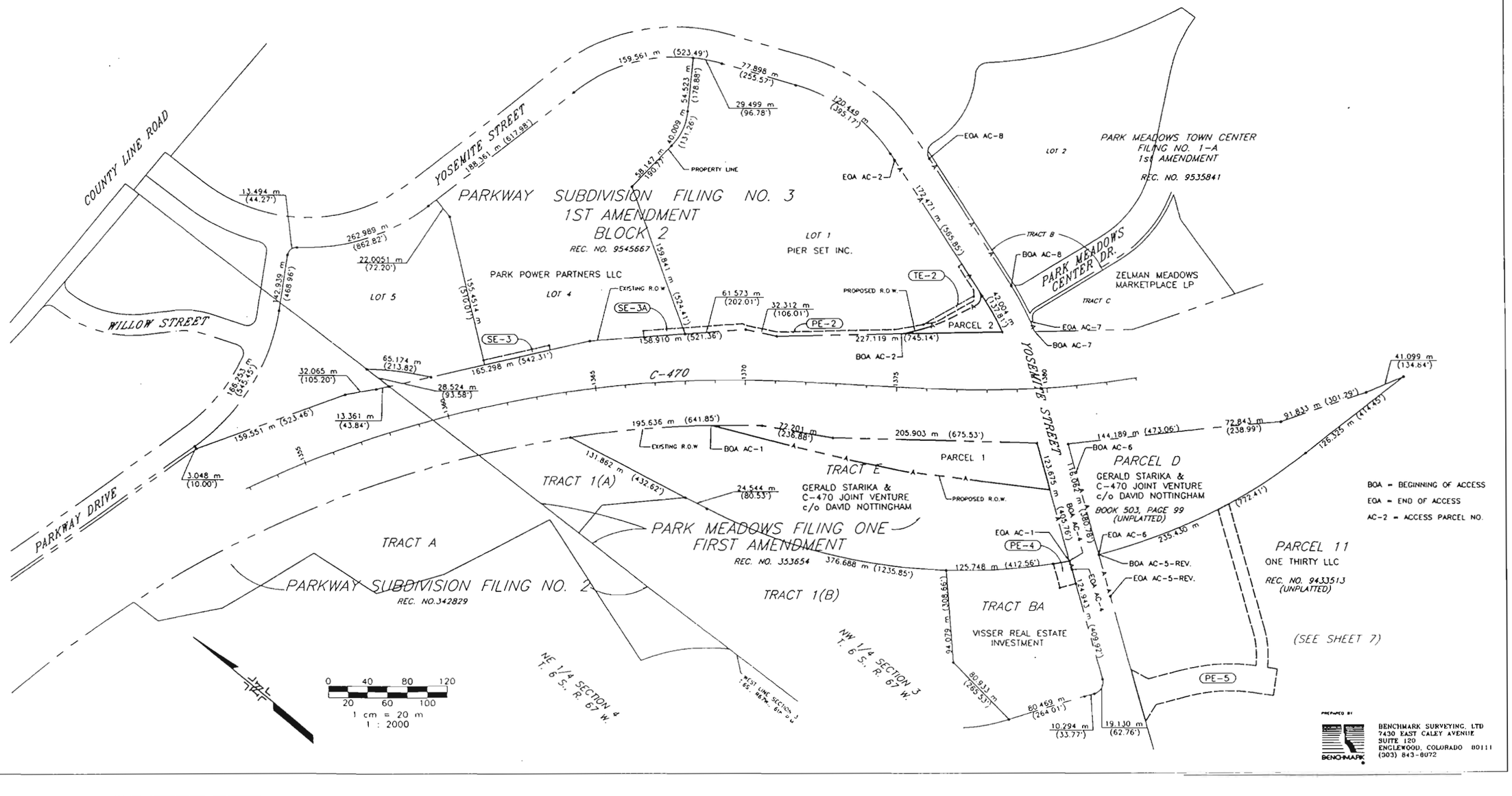

PREPARED BY
BENCHMARK SURVEYING, LTD
7430 EAST CALEY AVENUE
SUITE 120
ENGLEWOOD, COLORADO 80111
(303) 843-0072

FED. ROAD REGION	DIVISION	PROJECT NO.	SHEET NO.	TOTAL SHEETS
8	COLORADO	CC 4701-082	30	154

PROJECT # CC 4701-081
C-470/YOSEMITE ST. INTERCHANGE PROJECT
LOCATED IN SECTIONS 3 AND 4, TOWNSHIP 6 SOUTH, RANGE 67 WEST OF THE 6TH PRINCIPAL MERIDIAN
COUNTY OF DOUGLAS, STATE OF COLORADO

OVERALL OWNERSHIP MAP
C470/YOSEMITE ST INTERCHANGE PROJECT

REVISIONS		
3/28/96	SHORTENED ACCESS CONTROL AC-5	LC

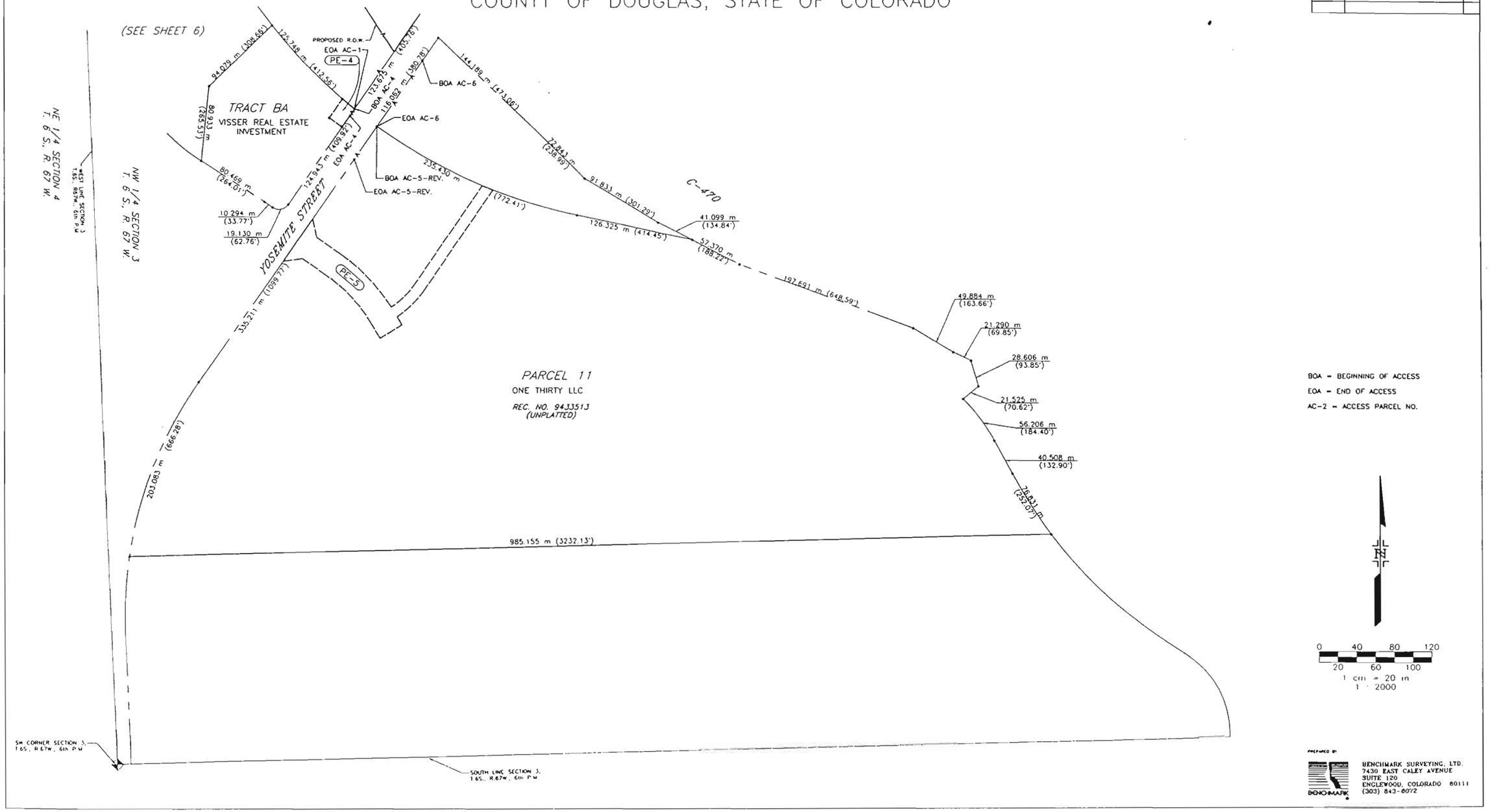

BOA = BEGINNING OF ACCESS
EOA = END OF ACCESS
AC-2 = ACCESS PARCEL NO.

0 40 80 120
20 60 100
1 cm = 20 m
1 : 2000

PREPARED BY
BENCHMARK
BENCHMARK SURVEYING, LTD.
7430 EAST CALEY AVENUE
SUITE 120
ENGLEWOOD, COLORADO 80111
(303) 843-8072

AS CONSTRUCTED

NO REVISIONS | REVISED | VOID

FEDERAL RD REGION NO	DIVISION	PROJ. NO.	SHEET NO.	TOTAL SHEETS
VIII	COLORADO	CC 4701-082	31	154

REVISIONS		

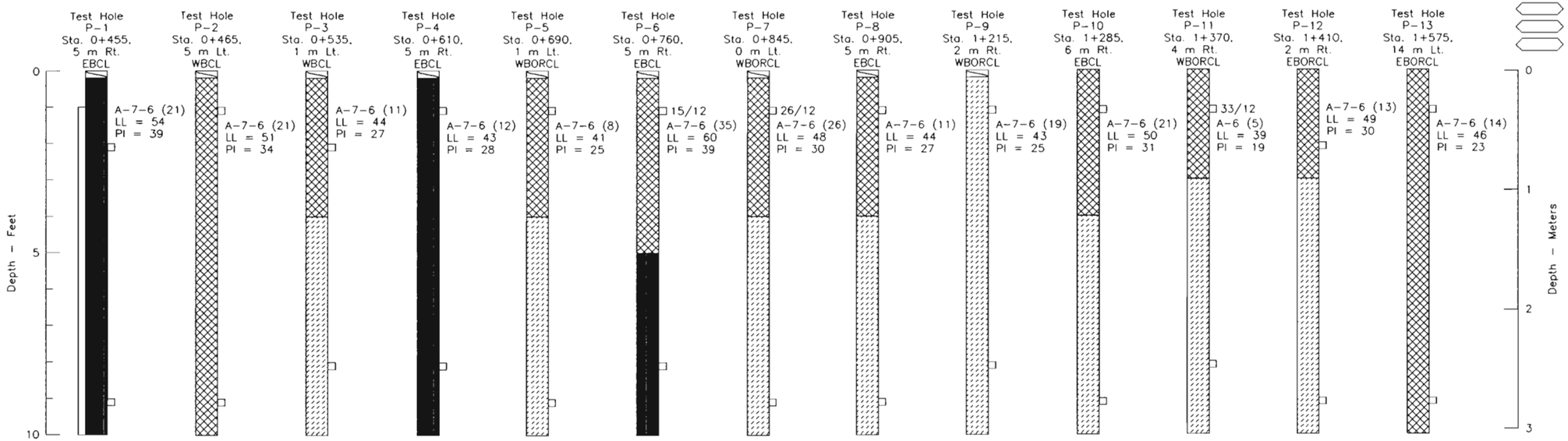

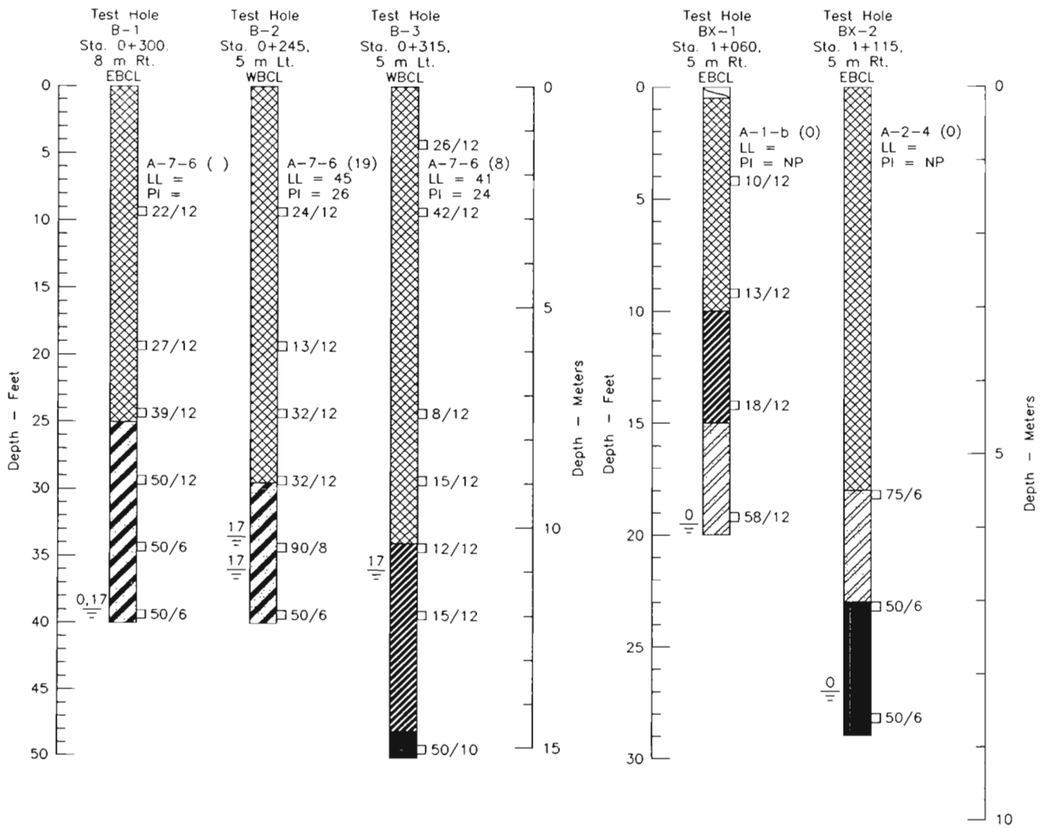

FELSBURG HOLT & ULLEVIG

C-470/YOSEMITE INTERCHANGE

SOIL BORING LOGS

DATE	PROJECT NO.	DESIGNED BY	DRAWN BY	CHECKED BY	SHEET NO.	OF SHEETS	DRAWING NO
JAN 96	95-088			DB	1	2	SB-1

AS CONSTRUCTED				
NO REVISIONS	REVISED	VOID		

FEDERAL RD REGION NO.	DIVISION	PROJ. NO	SHEET NO.	TOTAL SHEETS
VIII	COLORADO	CC 4701-082	32	154

REVISIONS		

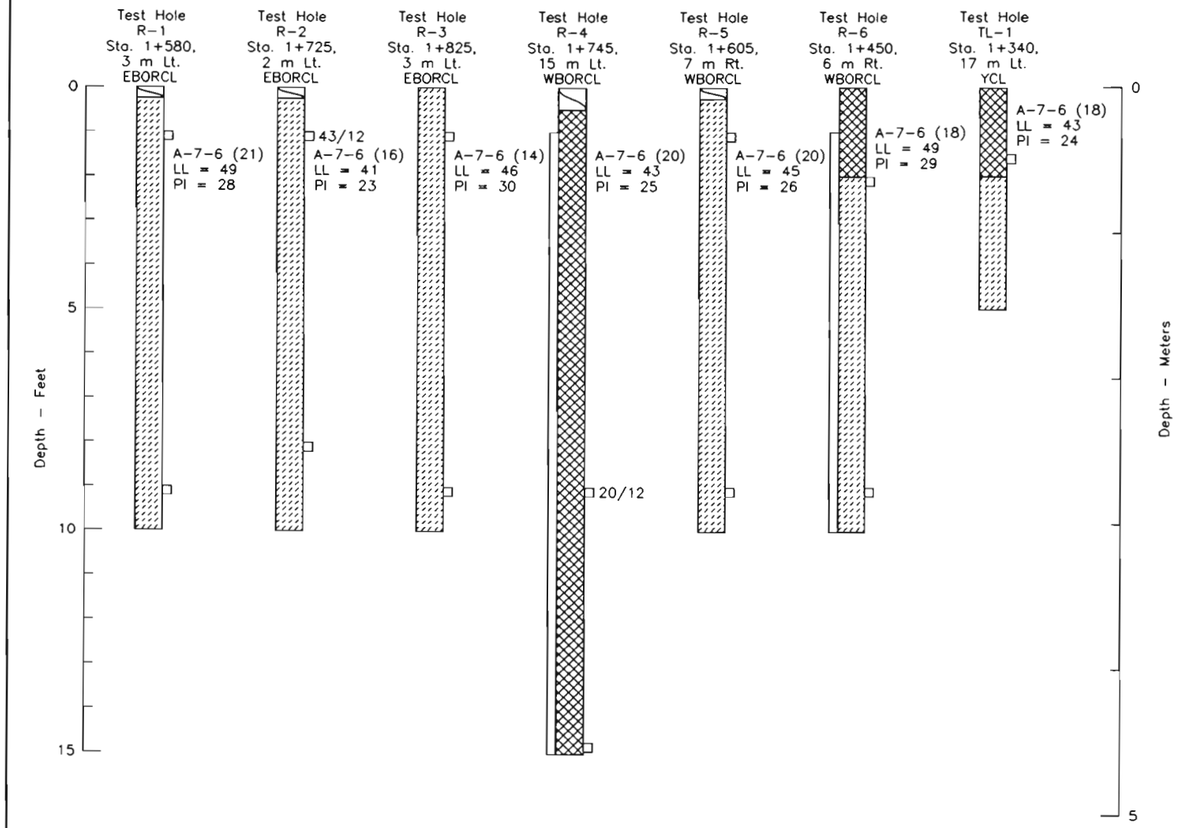

LEGEND:

- Topsoil.
- Fill: Varying degrees of clay to sand to claystone to sandstone; medium to highly plastic, stiff to hard, moist to very moist and brown to olive to gray in color.
- Clay: Sandy to very sandy with occasional very clayey sand lenses, low to highly plastic, medium to hard, slightly moist to very moist and brown.
- Weathered Claystone/Sandstone: Non plastic to highly plastic, fine to coarse grained, weathered, moist to wet, brown to gray with iron staining.
- Interbedded Sandstone/Claystone Bedrock: Non to highly plastic, fine to coarse grained, hard to very hard, moist to wet, olive to brown or gray with iron staining.
- Sandstone Bedrock: Fine to coarse grained, non to low plastic, hard to very hard, slightly moist to moist, brown to olive with iron staining.
- Claystone Bedrock: Occasional sandstone lenses, medium to highly plastic, hard to very hard, moist to very moist, brown or olive to gray.

23/12 Drive sample blow count. Indicates 23 blows of a 140-pound hammer falling 30 inches were required to drive the sampler 12 inches.

Drive sample, 2 inch I.D. California liner sample.

Small disturbed sample.

Large disturbed sample.

0 Depth to water level and number of days after drilling that measurement was taken.

NOTES:

1. Test holes were drilled on 7-27-95 and 7-28-95 with 4-inch diameter continuous flight power augers.
2. Locations of the test holes were meosured approximately by pacing from features shown on the site plan provided.
3. Elevations of the test holes were not measured and the logs of the test holes are drawn to depth.
4. The test hole locations and elevations should be considered accurate only to the degree implied by the method used.
5. The lines beween materials shown on the test hole logs represent the approximate boundaries between materail types and the transitions may be gradual.
6. Water level readings shown on the logs were made at the time and under the conditions indicated. Fluctuations in the water level may occur with time.
7. Stations and offsets shown are in meters.

FELSBURG HOLT & ULLEVIG

C-470/YOSEMITE INTERCHANGE

SOIL BORING LOGS

DATE	PROJECT NO.	DESIGNED BY	DRAWN BY	CHECKED BY DB	SHEET NO 2 OF 2 SHEETS	DRAWING NO
JAN 96	95-088					SB-2

AS CONSTRUCTED			
NO REVISIONS	REVISED	VOID	

FEDERAL RD REGION NO	DIVISION	PROJ. NO.	SHEET NO	TOTAL SHEETS
VIII	COLORADO	CC 4701-082	33	54

REVISIONS		

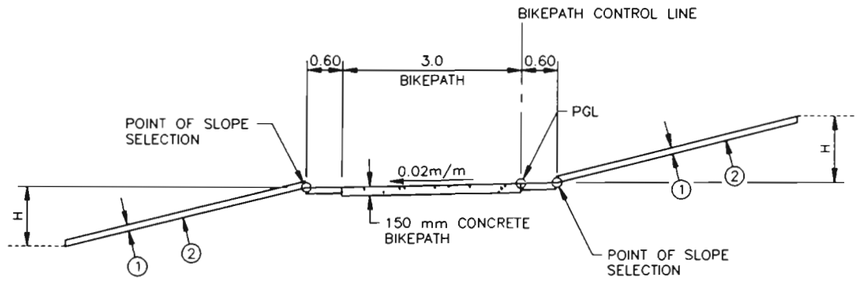

BIKEPATH DETAIL

STA. 0+397.40 TO 1+180.00
BIKEPATH CONTROL LINE

1. MINIMUM 105 mm DEPTH OF TOPSOIL.
2. SIDE SLOPES:
   SLOPE 4:1 WHERE H IS 3.0 m OR LESS.
   SLOPE 3:1 WHERE H IS OVER 3.0 m.

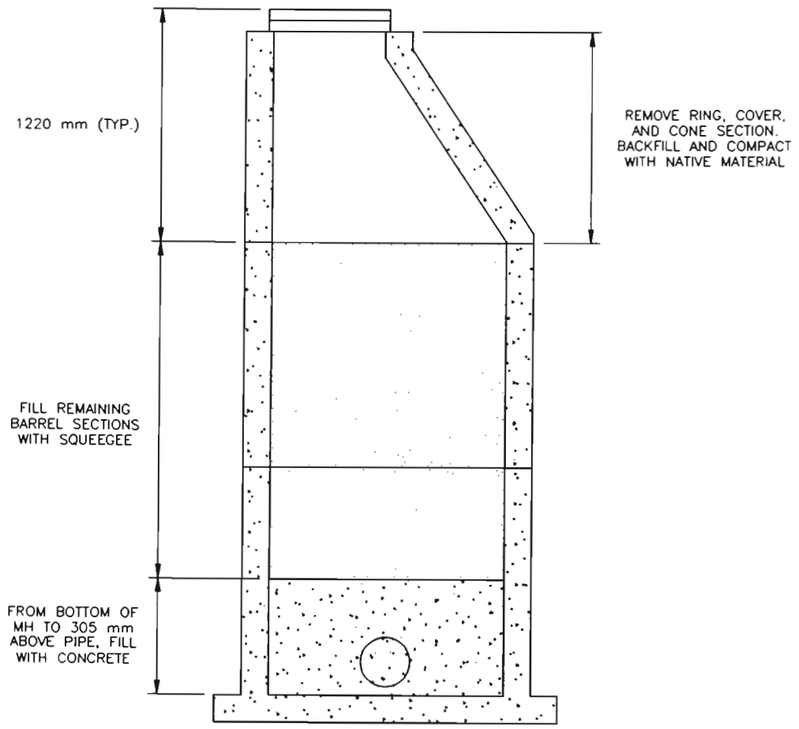

REMOVE STRUCTURE DETAIL

STA. 1+155, 1 LT. AND 1+408, 1 LT. YOSEMITE CONTROL LINE

COST TO BE INCLUDED IN REMOVE STRUCTURE.

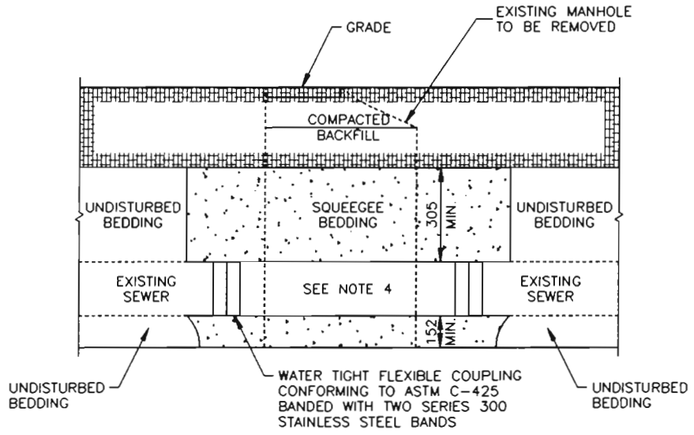

REMOVE STRUCTURE DETAIL

STA. 1+244, 3.2 LT. YOSEMITE CONTROL LINE

COST FOR STRUCTURE REMOVAL, NEW PIPE, COUPLINGS, BEDDING, AND COMPACTED BACKFILL SHALL BE INCLUDED IN THE WORK.

NOTES:

1. WHEN SANITARY SEWER LINES ARE DAMAGED, THE SOUTHGATE SANITATION DISTRICT SHALL BE NOTIFIED IMMEDIATELY BY THE CONTRACTOR.
2. THE CONTRACTOR SHALL PROVIDE BYPASS PUMPING UNTIL THE REPAIR IS CONSTRUCTED, REVIEWED AND APPROVED BY THE SOUTHGATE SANITATION DISTRICT.
3. SANITARY SEWER LINE REPAIRS SHALL NOT BE BACKFILLED UNTIL THEY ARE REVIEWED BY THE SOUTHGATE SANITATION DISTRICT.
4. THE MAIN REPAIR SHALL USE PVC PIPE OF A CLASS AT LEAST EQUAL TO THE EXISTING PIPE, BUT IN NO CASE LESS THAN THE FOLLOWING MINIMUM CLASS. FOR LINES 375 mm IN DIAMETER OR LESS, ASTM D3034 SDR 35, FOR LINES 450 mm IN DIAMETER OR LARGER, ASTM F679. THE SOUTHGATE SANITATION DISTRICT MAY REQUIRE OTHER MATERIALS AND REPAIR TECHNIQUES ON A CASE BY CASE BASIS. THE NEW PIPE SHALL BE CONNECTED TO THE EXISTING MAIN USING WATER TIGHT FLEXIBLE COUPLINGS MEETING ASTM C-425 BANDED WITH TWO SERIES 300 STAINLESS STEEL BANDS AND EACH COUPLING SHALL BE ENCASED IN CONCRETE.

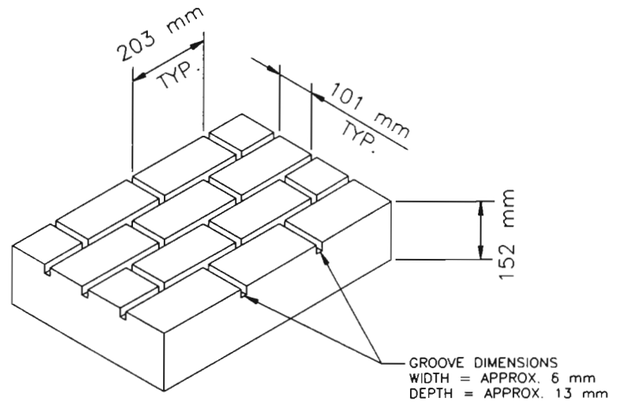

PATTERNED CONCRETE DETAIL

NOTE:

PATTERNED CONCRETE COLOR SHALL BE ONE OF THE FOLLOWING:
ARIZONA TAN (A-53-P) BY L.M. SCOFIELD CO.
DESERT TAN BY BOMANITE CORP.
MESA BUFF (NO. 5447) BY FRANK DAVIS CO.
OR AN APPROVED EQUAL.

FELSBURG HOLT & ULLEVIG

C-470/YOSEMITE INTERCHANGE

MISCELLANEOUS DETAIL

DATE	PROJECT NO.	DESIGNED BY DB	SHEET NO. 1	DRAWING NO.
JAN 96	95-088	DRAWN BY SS	OF 1 SHEETS	MD-1
		CHECKED BY DB		

AS CONSTRUCTED			
NO REVISIONS		REVISED	VOID

FEDERAL AID NO / REGION NO	DIVISION	PROJ. NO	SHEET NO	TOTAL SHEETS
VIII	COLORADO	CC 4701-082	34	154

REVISIONS		

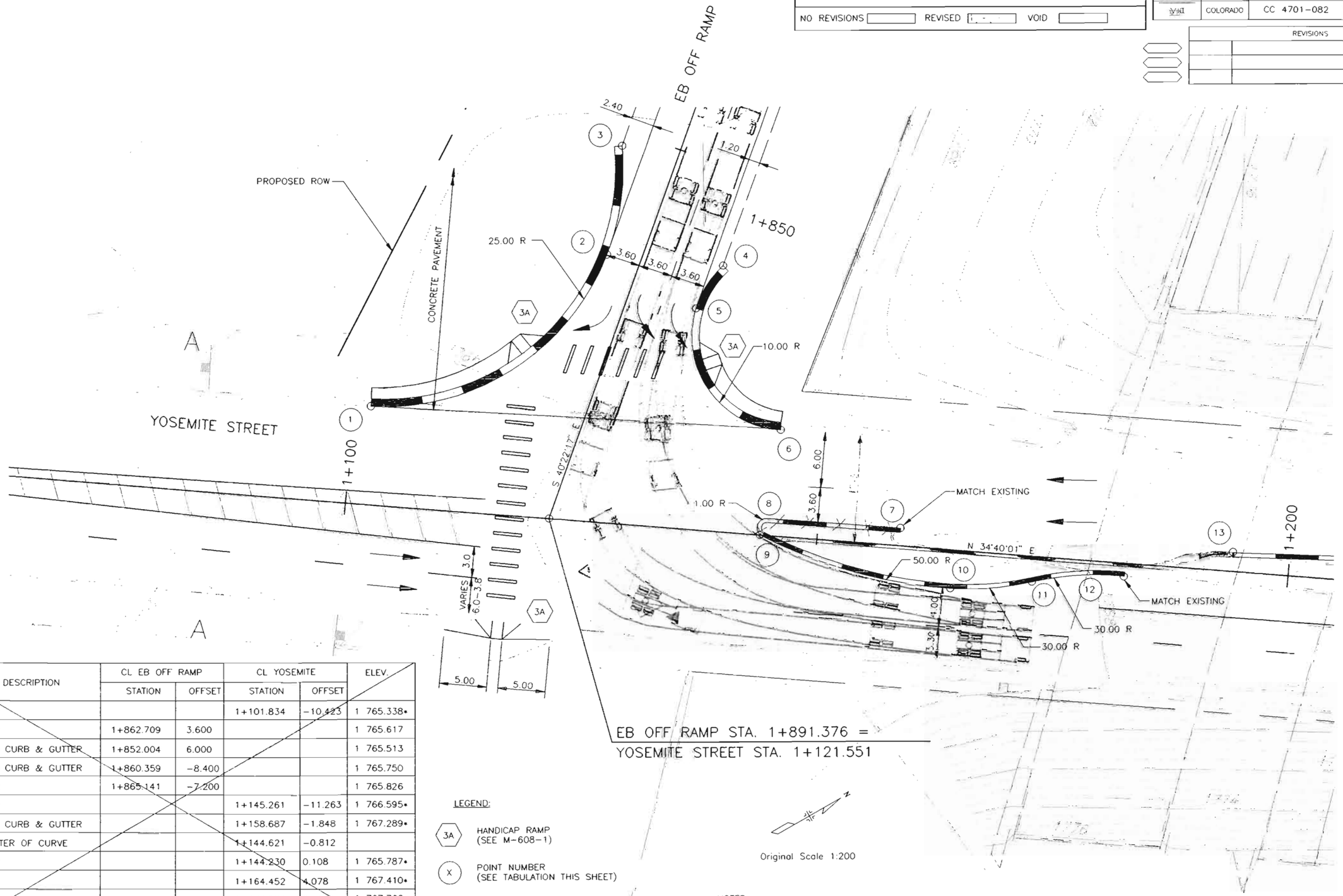

EB OFF RAMP STA. 1+891.376 =
YOSEMITE STREET STA. 1+121.551

POINT	DESCRIPTION	CL EB OFF RAMP		CL YOSEMITE		ELEV.
		STATION	OFFSET	STATION	OFFSET	
1	PCR			1+101.834	-10.423	1 765.338•
2	PCR	1+862.709	3.600			1 765.617
3	END CURB & GUTTER	1+852.004	6.000			1 765.513
4	END CURB & GUTTER	1+860.359	-8.400			1 765.750
5	PCR	1+865.141	-7.200			1 765.826
6	PCR			1+145.261	-11.263	1 766.595•
7	END CURB & GUTTER			1+158.687	-1.848	1 767.289•
8	CENTER OF CURVE			1+144.621	-0.812	
9	PCR			1+144.230	0.108	1 765.787•
10	PCC			1+164.452	4.078	1 767.410•
11	PRC			1+172.984	2.717	1 767.766•
12	PRC			1+182.672	1.361	1 768.138•
13	END CURB AND GUTTER			1+193.927	-1.961	1 768.513•

• MATCH EXISTING GROUND ELEVATIONS. THOSE SHOWN ARE APPROXIMATE ONLY.
POSITIVE NUMBERS ARE RIGHT OFFSETS; NEGATIVE ARE LEFT OFFSETS.

LEGEND:

3A HANDICAP RAMP (SEE M-608-1)

(X) POINT NUMBER (SEE TABULATION THIS SHEET)

Original Scale 1:200

NOTES:

ALL DIMENSIONS ARE TO PANLINE UNLESS OTHERWISE NOTED.

WHOLE NUMBERS INDICATE MILLIMETERS
DECIMAL NUMBERS INDICATE METERS.

FELSBURG HOLT & ULLEVIG

C-470/YOSEMITE INTERCHANGE

INTERSECTION DETAIL
C-470 EASTBOUND OFF RAMP / YOSEMITE STREET

DATE	PROJECT NO.	DESIGNED BY	DRAWN BY	CHECKED BY	SHEET NO.	OF	SHEETS	DRAWING NO.
FEB 96	95-088	DB	SS	DB	1	2		ID-1

AS CONSTRUCTED			
NO REVISIONS ☐	REVISED ☐	VOID ☐	

FEDERAL RD REGION NO.	DIVISION	PROJ. NO.	SHEET NO.	TOTAL SHEETS
VIII	COLORADO	CC 4701-082	35	154

REVISIONS		

POINT	DESCRIPTION	CL EB OFF RAMP		CL YOSEMITE		ELEV
		STATION	OFFSET	STATION	OFFSET	
1	PCR			1+274.694	-11.277	1 771.000•
2	PCR	1+857.428	7.200			1 771.394
3	END CURB & GUTTER	1+852.678	8.400			1 771.363
4	END CURB & GUTTER	1+828.253	-2.400			1 771.337
5	PCR	1+839.685	0.000			1 771.380
6	CENTER OF CURVE	1+860.782	-3.000			1 771.457
7	CENTER OF CURVE	1+866.580	-3.600	1+296.882	-12.182	
8	CENTER OF CURVE			1+301.768	-12.167	
9	PCR			1+320.080	-13.332	1 772.403
10	CENTER OF CURVE			1+274.332	-3.310	
11	PCR			1+233.134	-1.723	1 769.879•
12	PRC			1+227.339	0.095	1 769.700•
13	PCR			1+221.020	2.032	1 769.456•
14	PT			1+234.187	-3.526	1 769.821•

• MATCH EXISTING GROUND ELEVATIONS. THOSE SHOWN ARE APPROXIMATE ONLY.
POSITIVE NUMBERS ARE RIGHT OFFSETS; NEGATIVE ARE LEFT OFFSETS.

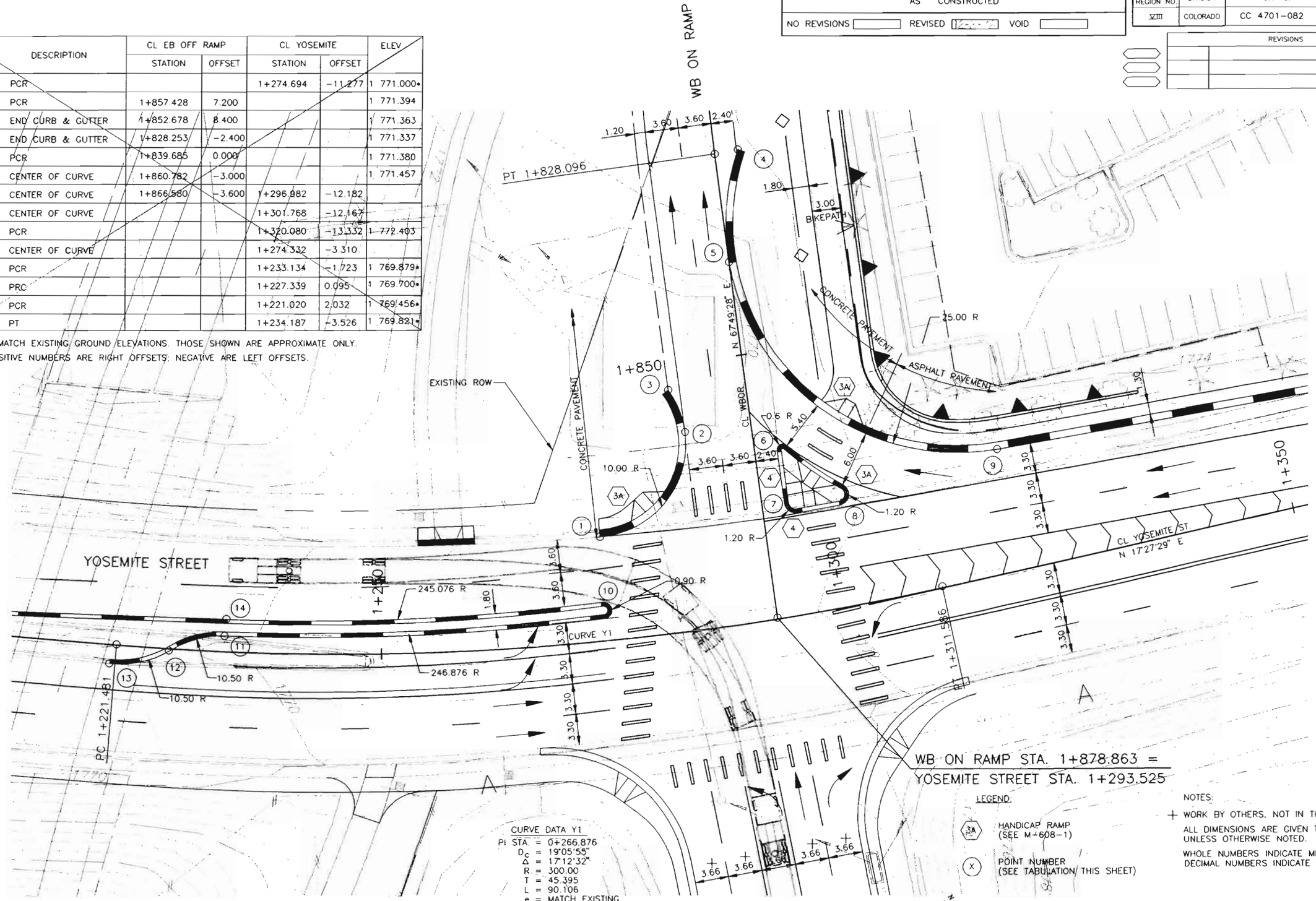

CURVE DATA Y1
PI STA. = 0+266.876
D_c = 19°05'55"
Δ = 17°12'32"
R. = 300.00
T = 45.395
L = 90.106
e = MATCH EXISTING

LEGEND:

3A HANDICAP RAMP (SEE M-608-1)

X POINT NUMBER (SEE TABULATION THIS SHEET)

NOTES:

+ WORK BY OTHERS. NOT IN THIS CONTRACT.

ALL DIMENSIONS ARE GIVEN TO PANLINE UNLESS OTHERWISE NOTED.

WHOLE NUMBERS INDICATE MILLIMETERS DECIMAL NUMBERS INDICATE METERS.

Original Scale 1:200

FELSBURG HOLT & ULLEVIG

C-470/YOSEMITE INTERCHANGE

INTERSECTION DETAIL C-470 WESTBOUND ON RAMP / YOSEMITE STREET

DATE	PROJECT NO.	DESIGNED BY DB	SHEET NO. 2	DRAWING NO
FEB 96	95-088	DRAWN BY SS	OF 2 SHEETS	ID-2
		CHECKED BY DB		

POINT	DESCRIPTION	CL YOSEMITE STATION	CL YOSEMITE OFFSET	ELEVATION	
1	PCR	0+844.919	9.719	1 765.500	*
2	END CURB & GUTTER	0+859.913	24.821	1 765.951	*
3	END CURB & GUTTER	0+885.518	24.641	1 766.249	*
4	PCR	0+900.524	9.742	1 766.200	*
5	PCR	0+995.546	−9.667	1 764.600	*
6	END CURB & GUTTER	1+002.570	16.593	1 764.800	*
7	EOP	1+002.610	20.313	1 765.000	*
8	EOP	1+012.582	−30.204	1 764.900	*
9	EOP	1+024.489	−30.238	1 764.800	*
10	EOP	1+024.019	−22.729	1 765.000	*
11	END CURB & GUTTER	1+013.571	−16.656	1 764.800	*
12	PCR	1+020.546	−9.580	1 763.800	*

* MATCH EXISTING GROUND ELEVATIONS. THOSE SHOWN ARE APPROXIMATE ONLY. POSITIVE NUMBERS ARE RIGHT OFFSETS; NEGATIVE ARE LEFT OFFSETS.

AS CONSTRUCTED

NO REVISIONS ☐ REVISED ☐ VOID ☐

FEDERAL RD REGION NO.	DIVISION	PROJ. NO.	SHEET NO.	TOTAL SHEETS
VIII	COLORADO	CC 4701-082	36	154

REVISIONS		

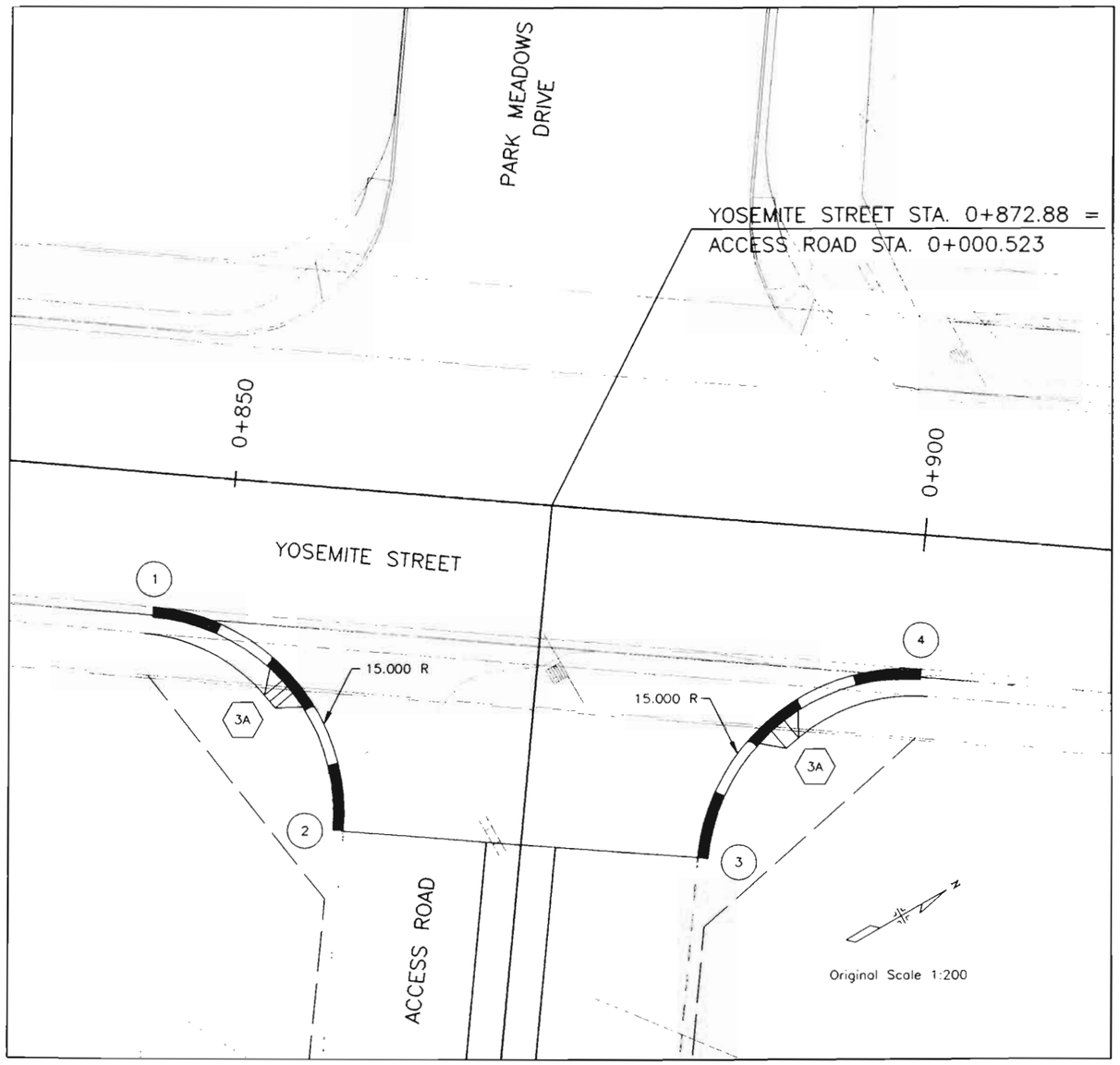

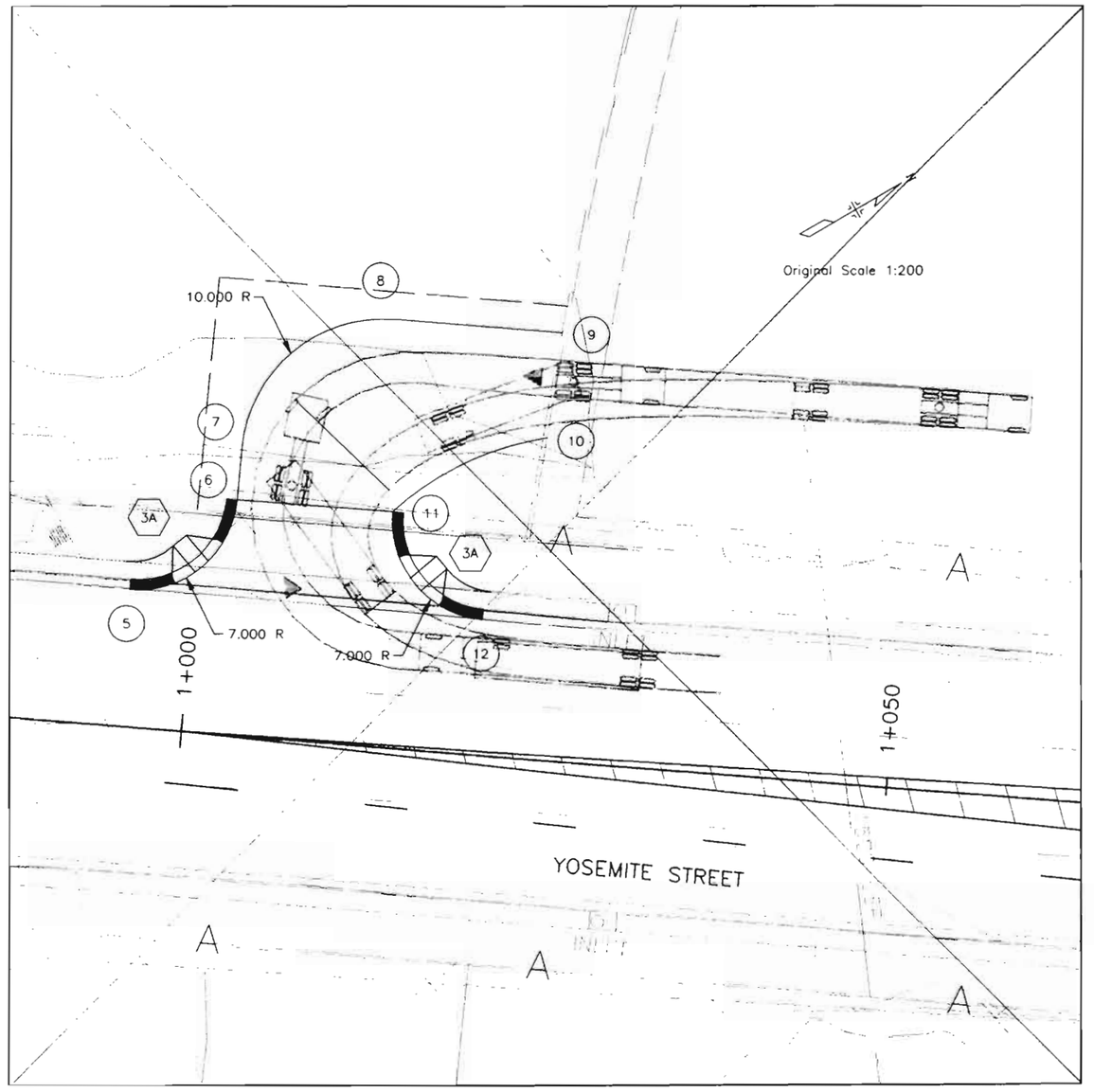

LEGEND:

(3A) HANDICAP RAMP (SEE M-608-1)

(X) POINT NUMBER (SEE TABULATION THIS SHEET)

WHOLE NUMBERS INDICATE MILLIMETERS
DECIMAL NUMBERS INDICATE METERS.

FELSBURG HOLT & ULLEVIG

C-470/YOSEMITE INTERCHANGE

INTERSECTION DETAIL
ACCESS ROAD / YOSEMITE STREET

DATE	PROJECT NO.	DESIGNED BY	DRAWN BY	CHECKED BY	SHEET NO.	OF SHEETS	DRAWING NO.
FEB 96	95-088	DB	SS	DB	3	3	ID-3

AS CONSTRUCTED				
NO REVISIONS	REVISED	VOID		

FEDERAL RD REGION NO	DIVISION	PROJ NO	SHEET NO	TOTAL SHEETS
VIII	COLORADO	CC 4701-082	36A	154

REVISIONS

POINT	DESCRIPTION	CL YOSEMITE STATION	CL YOSEMITE OFFSET	ELEV.
1	PCR	0+988.750	-9.720	1 764.775•
2	PCR	0+994.516	-12.793	1 764.775
3	PCR	1+009.626	-35.091	1 764.219
4	END CURB & GUTTER	1+016.672	-43.202	1 763.880
5	PCR	1+020.759	-9.697	1 764.397
6	PCR	1+013.991	-18.473	1 764.477
7	END CURB & GUTTER	1+024.056	-35.049	1 763.856•
8	PCR	1+001.048	-11.199	1 764.630
9	PCR	1+004.143	-17.256	1 764.593
10	PCR	1+006.011	-17.014	1 764.571
11	PCR	1+006.801	-13.390	1 764.562
12	PCR	1+003.880	-9.751	1 764.597
13	PCR	1+001.942	-9.744	1 764.619

• MATCH EXISTING GROUND ELEVATIONS. THOSE SHOWN ARE APPROXIMATE ONLY. POSITIVE NUMBERS ARE RIGHT OFFSETS; NEGATIVE ARE LEFT OFFSETS.

LEGEND:

3A HANDICAP RAMP

X POINT NUMBER (SEE TABULATION THIS SHEET)

300mm HBP (GRADING C)(ASPHALT)(C520)

NOTES:

ALL DIMENSIONS ARE TO PANLINE UNLESS OTHERWISE NOTED.

WHOLE NUMBERS INDICATE MILLIMETERS DECIMAL NUMBERS INDICATE METERS.

GRADE TO REMAIN WITHIN PROPOSED ROW.

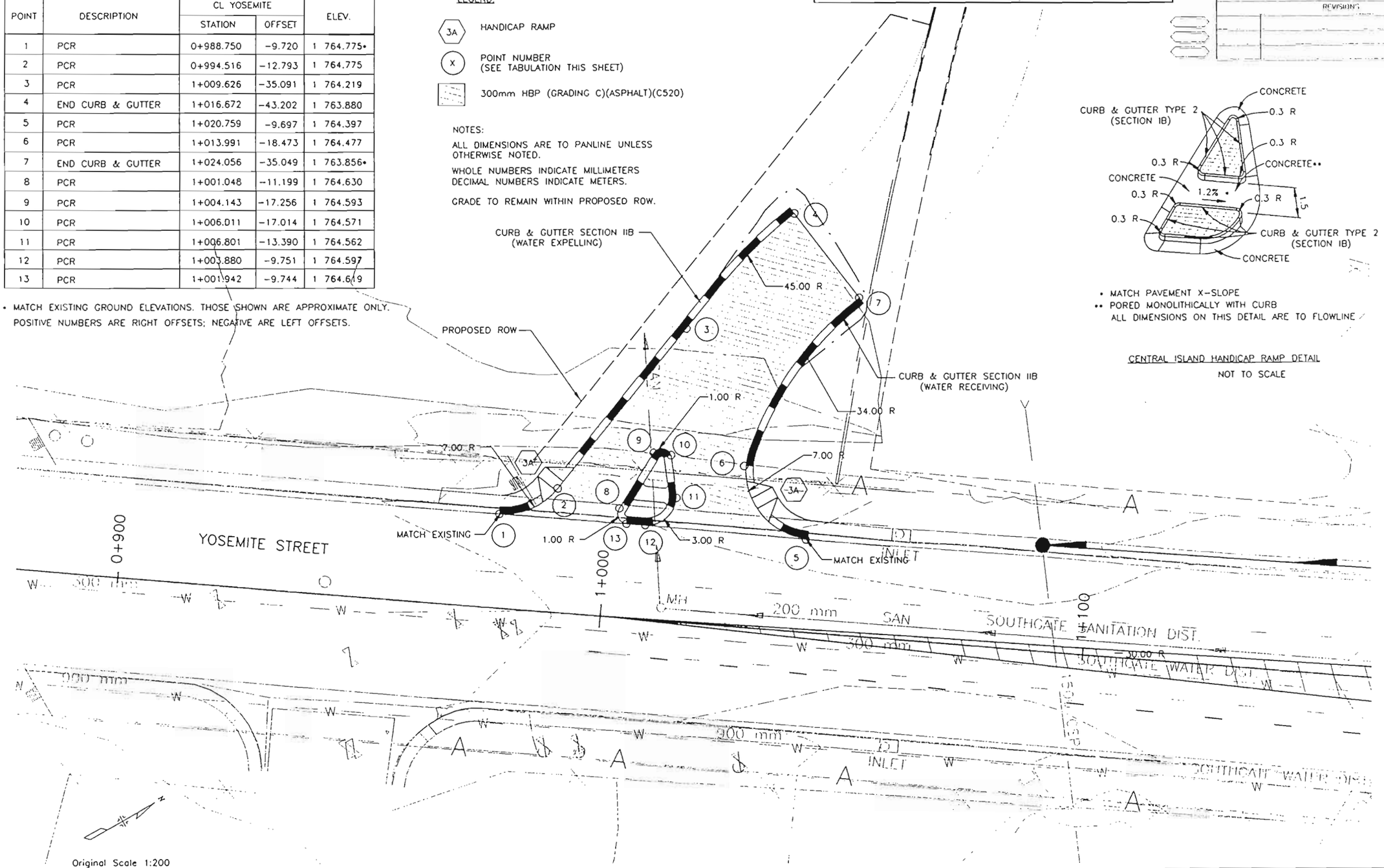

• MATCH PAVEMENT X-SLOPE
•• PORED MONOLITHICALLY WITH CURB
ALL DIMENSIONS ON THIS DETAIL ARE TO FLOWLINE

CENTRAL ISLAND HANDICAP RAMP DETAIL
NOT TO SCALE

FELSBURG HOLT & ULLEVIG

C-470/YOSEMITE INTERCHANGE
INTERSECTION DETAIL / ACCESS ROAD

DATE	PROJECT NO	DESIGNED / DRAWN		SHEET NO
JUNE 96	95-088			ID-4

AS CONSTRUCTED			
NO REVISIONS ☐	REVISED ☐	VOID ☐	

FEDERAL RD REGION NO.	DIVISION	PROJ. NO.	SHEET NO.	TOTAL SHEETS
VIII	COLORADO	CC 4701-082	37	154

REVISIONS		

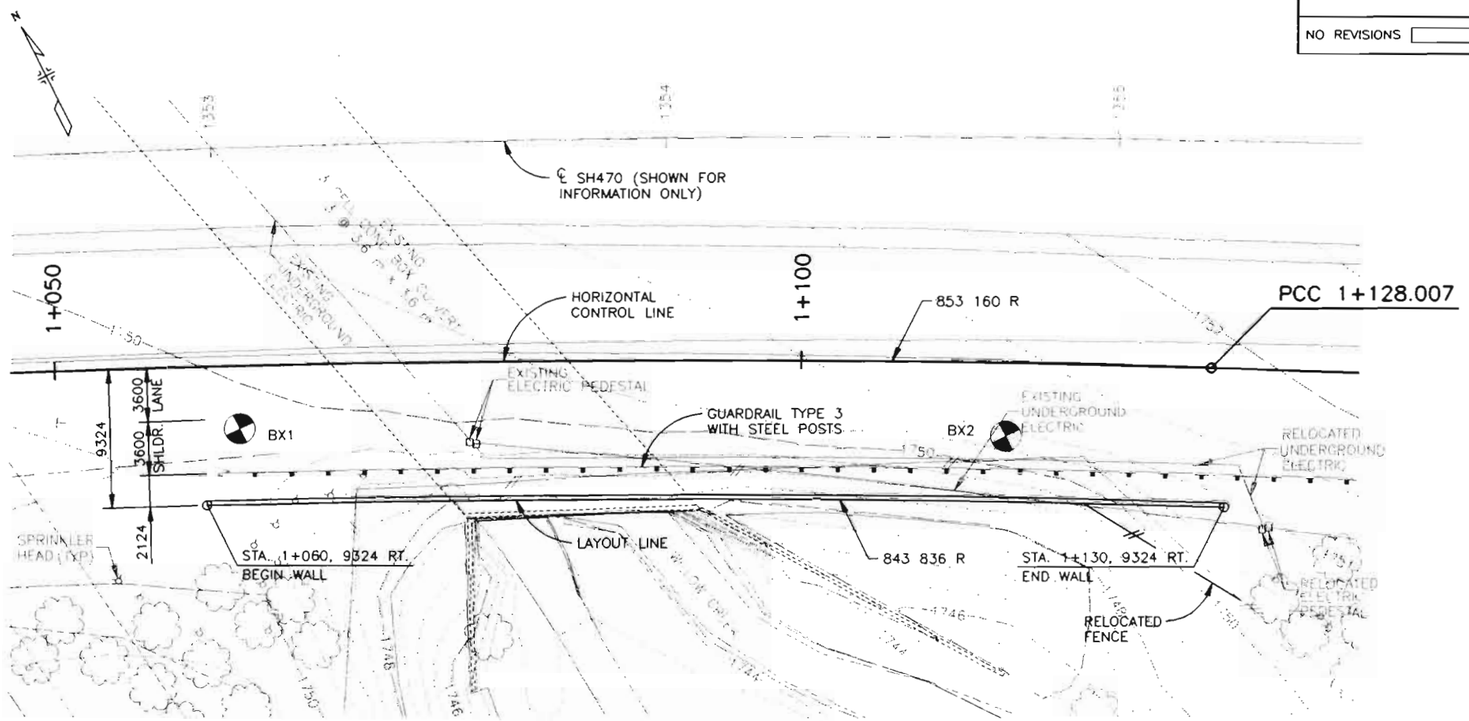

PLAN

ORIGINAL SCALE 1:200

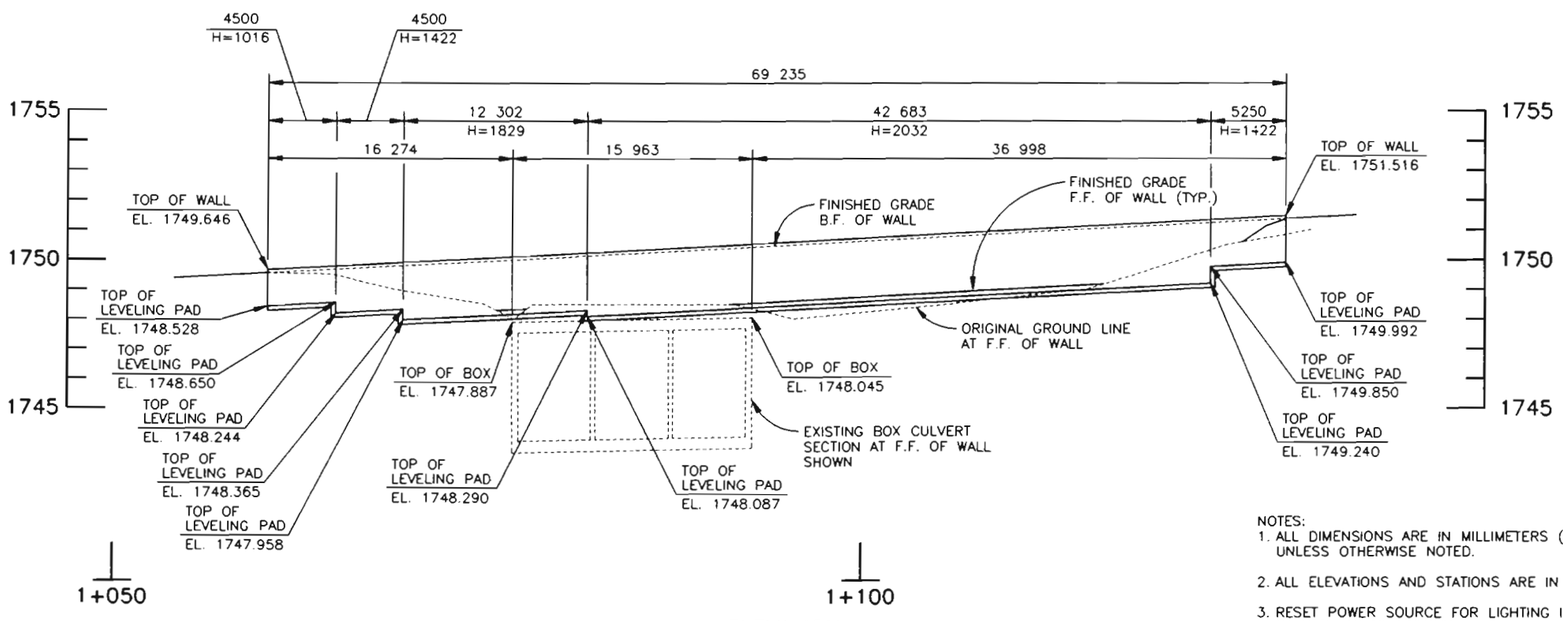

ELEVATION

ORIGINAL SCALE: 1:200 HORIZONTAL
1:100 VERTICAL

PAY QUANTITY

ITEM NO.	DESCRIPTION	UNIT	RETAINING WALL C
504	MECHANICALLY STABILIZED EARTH WALL	m2	134.7
601	STRUCTURAL CONCRETE COATING (ANTI GRAFFITI)	m2	169.2

QUANTITIES – FOR INFORMATION ONLY

ITEM NO.	DESCRIPTION	UNIT	RETAINING WALL C
206	STRUCTURE EXCAVATION	m3	416.0
206	STRUCTURE BACKFILL (CLASS 1)	m3	535.0
* 601	CONCRETE CLASS B	m3	6.6
* 602	REINFORCING STEEL	kg	23

* BASED ON A 305 mm BLOCK WIDTH

NOTES:
1. ALL DIMENSIONS ARE IN MILLIMETERS (mm) UNLESS OTHERWISE NOTED.
2. ALL ELEVATIONS AND STATIONS ARE IN METERS (m).
3. RESET POWER SOURCE FOR LIGHTING INSIDE BOX CULVERT AS NECESSARY.

FELSBURG HOLT & ULLEVIG

COLORADO DEPARTMENT OF TRANSPORTATION

SH 470/YOSEMITE INTERCHANGE
RETAINING WALL C
GENERAL LAYOUT

Designer D. GROENEMAN	Structure Numbers		WALL C
Detailer S. DANKENBRING			
Drawing Number RW1 of 2 Drawings			

DESIGN			DETAIL		
	Initial	Date		Initial	Date
Designed by	DDG	11-95	Detailed by	SED	11-95
Checked by	EPL	1-96	Checked by	DDG	11-95
QUANTITIES					
Quantities by					
Checked by					

Revision Dates (Preliminary Stage Only)

AS CONSTRUCTED			
NO REVISIONS	REVISED	VOID	

FEDERAL RD REGION NO.	DIVISION	PROJ. NO.	SHEET NO.	TOTAL SHEETS
VIII	COLORADO	CC 4701-082	38	154

REVISIONS		

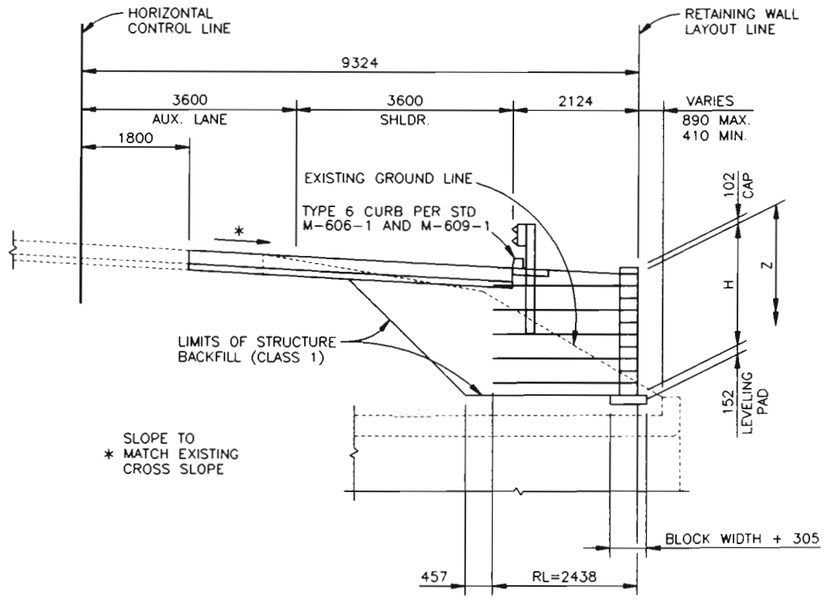

TYPICAL SECTION

ORIGINAL SCALE 1:50

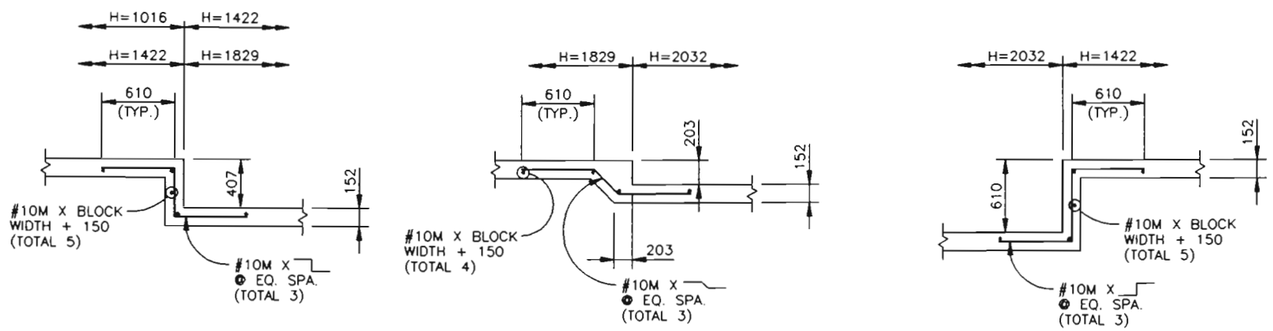

FOOTING STEP DETAILS

ORIGINAL SCALE 1:25

REQUIRED LTDS OF GEOSYNTHETIC REINFORCEMENT (N/m)				
H (mm)	1016	1422	1829	2032
NO. OF BLOCKS BELOW CAP	5	7	9	10
NO. LAYERS REINFORCEMENT	2	3	4	5
Z (mm) 203	3185	3185	3185	3185
Z (mm) 610	4561	4561	4561	4561
Z (mm) 1016	–	5934	5934	5934
Z (mm) 1422	–	–	7306	7306
Z (mm) 1829	–	–	–	8682

NOTES

FOR GEOSYNTHETIC REINFORCING MATERIAL, AFTER EVALUATING LONG-TERM CREEP, CONSTRUCTION DAMAGE, DURABILITY, AND OVERALL FACTOR OF SAFETY, THE PROVIDED LTDS SHALL BE GREATER THAN THE REQUIRED LTDS SPECIFIED IN THE PLANS. REFER TO THE SPECIFICATIONS FOR THE MINIMUM REQUIRED GRADE OF REINFORCING MATERIAL.

ALL LEVELING PADS, FOR A GIVEN WALL, SHALL BE CAST AT ONE TIME, OR AS DIRECTED BY THE ENGINEER. THE REINFORCEMENT, CONCRETE BLOCKS, AND BACKFILL, AT THE SAME LAYER, SHALL BE PLACED IN SEQUENCE AND COMPACTED COMPLETELY BEFORE MOVING TO THE NEXT UPPER LAYER.

LEVELING PAD SHALL BE CONCRETE CLASS B NON-REINFORCED, EXCEPT AT STEP LOCATION(S).

BLOCK WIDTH VARIES ACCORDING TO THE PREAPPROVED FACING.

ALL DIMENSIONS ARE IN MILLIMETERS (mm) UNLESS OTHERWISE NOTED.

ALL ELEVATIONS AND STATIONS ARE IN METERS (m).

BLOCKS PROVIDED FOR THIS PROJECT SHALL BE TAN COLORED. PRIOR TO THE BEGINNING OF WALL CONSTRUCTION, THE CONTRACTOR SHALL PROVIDE THE ENGINEER WITH FOUR SAMPLE BLOCKS THAT HAVE BEEN TREATED WITH THE ANTI-GRAFFITI COATING.

DEFINITIONS

H = DESIGN HEIGHT
LTDS = REQUIRED LONG-TERM DESIGN STRENGTH (N/m)

DESIGN DATA

SEE SPECIFICATIONS

UNIT WEIGHT OF SOIL = 19.638 kN/m3 IS ASSUMED

LIVE LOAD SURCHARGE = 11.979 kN/m2

INTERNAL FRICTION ANGLE OF SOIL FOR STRUCTURE BACKFILL CLASS 1 IS ASSUMED TO BE 34°

ϕ = 30° ; C = 0 (FOR FOUNDATION SOIL)
REINFORCEMENT-SOIL INTERACTION COEFFICIENTS = 1.0

REINFORCING STEEL Fy = 400 MPa

MIN. FACTORS OF SAFETY

SLIDING = 1.5
OVERTURNING = 2.0
PULLOUT = 1.5

DESIGN	Initial	Date
Designed by	DDG	11-95
Checked by	EPL	1-96

DETAIL	Initial	Date
Detailed by	SED	11-95
Checked by	DDG	11-95

QUANTITIES	Initial	Date
Quantities by	DDG	11-95
Checked by	EPL	1-96

FELSBURG HOLT & ULLEVIG

COLORADO DEPARTMENT OF TRANSPORTATION

SH 470/YOSEMITE INTERCHANGE
RETAINING WALL C DETAILS

Designer D. GROENEMAN	Structure	
Detailer S. DANKENBRING	Numbers	WALL C
Drawing Number RW2 of 2	Drawings	

Revision Dates (Preliminary Stage Only)

AS CONSTRUCTED				
NO REVISIONS		REVISED		VOID

FEDERAL RD REGION NO	DIVISION	PROJ NO.	SHEET NO	TOTAL SHEETS
VIII	COLORADO	CC 4701-082	39	154

REVISIONS

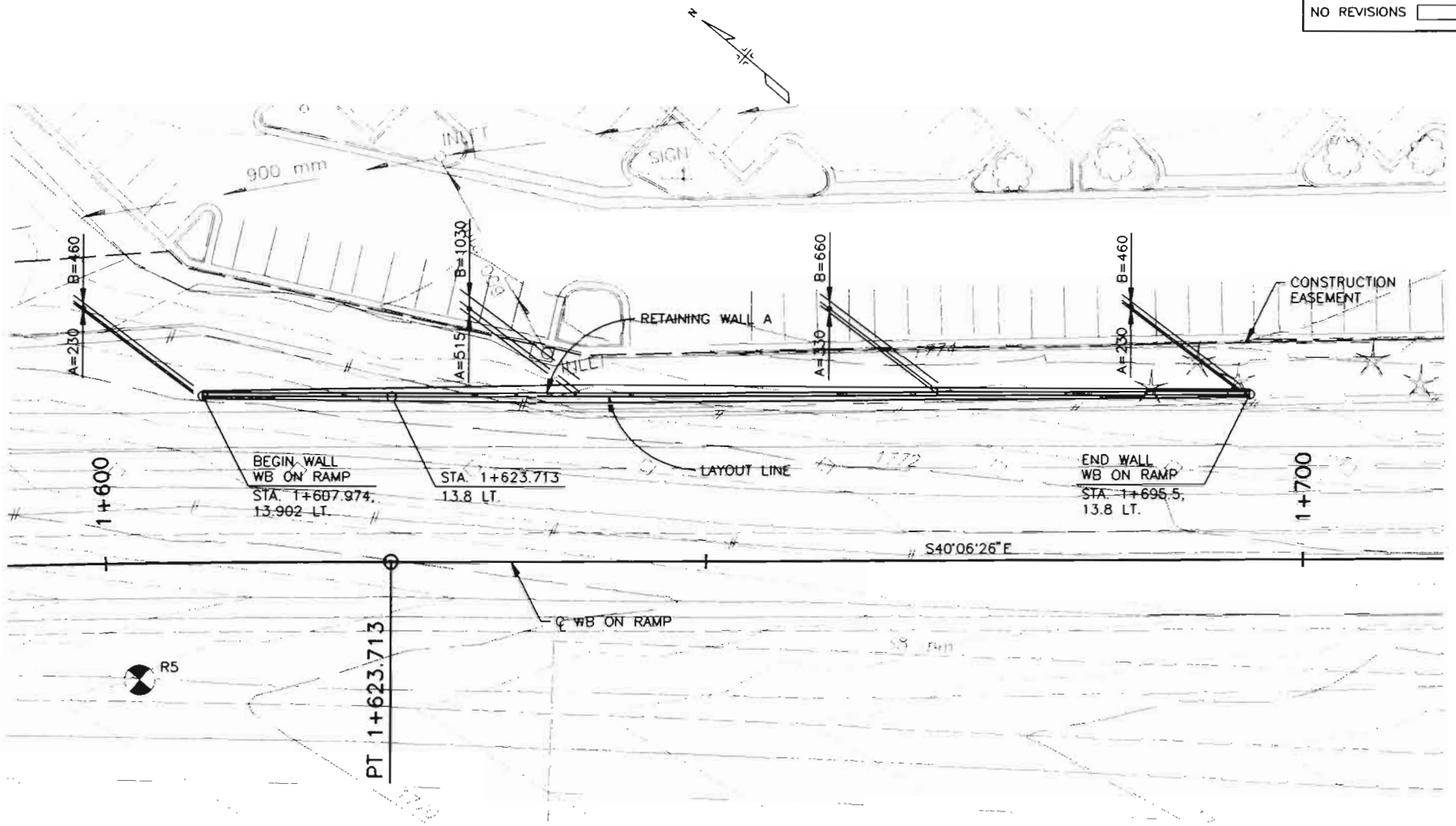

PLAN

ORIGINAL SCALE 1:250

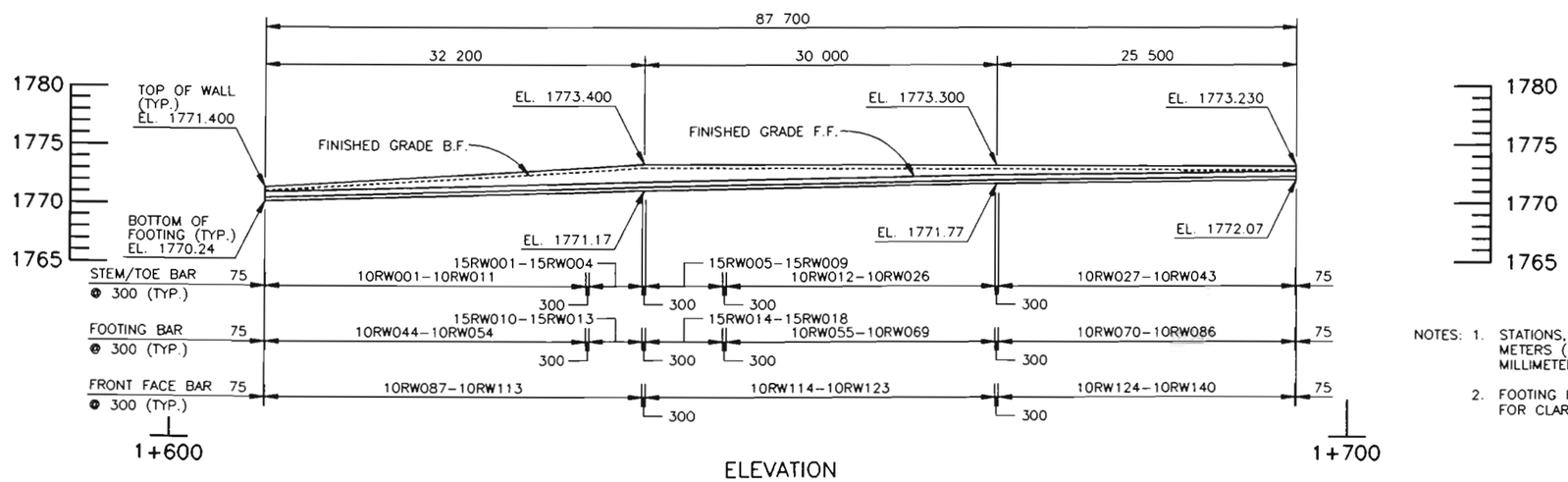

ELEVATION

ORIGINAL SCALE 1:250

INDEX OF DRAWINGS

DWG. NO.	DESCRIPTION
RW1	RETAINING WALL A GENERAL LAYOUT
RW2	RETAINING WALL B GENERAL LAYOUT
RW3	RETAINING WALL DETAILS
RW4	BAR LISTS

SUMMARY OF QUANTITIES

ITEM NO.	DESCRIPTION	UNIT	RETAINING WALL A	RETAINING WALL B
206	STRUCTURE EXCAVATION	m3	248.4	554.4
206	STRUCTURE BACKFILL (CLASS 1)	m3	159.7	337.1
514	PIPE RAILING	m	87.7	100.9
518	WATERSTOP (300 mm)	m	4.1	7.4
601	CONCRETE CLASS B (WALL)	m3	66.8	116.9
601	STRUCTURAL CONCRETE COATING	m2	185.2	279.6
601	STRUCTURAL CONCRETE COATING (ANTI-GRAFFITI)	m2	185.2	279.6
602	REINFORCING STEEL	kg	2296	4549
605	GEOCOMPOSITE DRAIN WITHOUT PIPE	m2	53.2	127.8

NOTES: 1. STATIONS, ELEVATIONS AND CURVE DATA ARE IN METERS (m) ALL OTHER DIMENSIONS ARE IN MILLIMETERS (mm).

2. FOOTING KEY AND PIPE RAILING NOT SHOWN FOR CLARITY.

FELSBURG HOLT & ULLEVIG

COLORADO DEPARTMENT OF TRANSPORTATION

C-470/YOSEMITE INTERCHANGE
RETAINING WALL A
GENERAL LAYOUT

Designer D. GROENEMAN	Structure		
Detailer S. DANKENBRING	Numbers	WALL A, WALL B	
Drawing Number RW1	of 4	Drawings	

Revision Dates (Preliminary Stage Only)

DESIGN			DETAIL			QUANTITIES		
	Initial	Date		Initial	Date		Initial	Date
Designed by	DDG	11-95	Detailed by	SED	11-95	Quantities by	DDG	11-95
Checked by	EPL	1-96	Checked by	DDG	11-95	Checked by	EPL	1-96

AS CONSTRUCTED			
NO REVISIONS	REVISED	VOID	

FEDERAL RD REGION NO.	DIVISION	PROJ NO.	SHEET NO.	TOTAL SHEETS
VIII	COLORADO	CC 4701-082	40	154

REVISIONS		

CURVE 1	CURVE 2	CURVE 3
R = 176.200	R = 8.800	R = 21.728
▲ = 14°23'42"	▲ = 79°14'46"	▲ = 15°56'42"
L = 44.269	L = 12.171	L = 4.911
T = 22.252	T = 7.286	T = 2.466

CURVE DATA

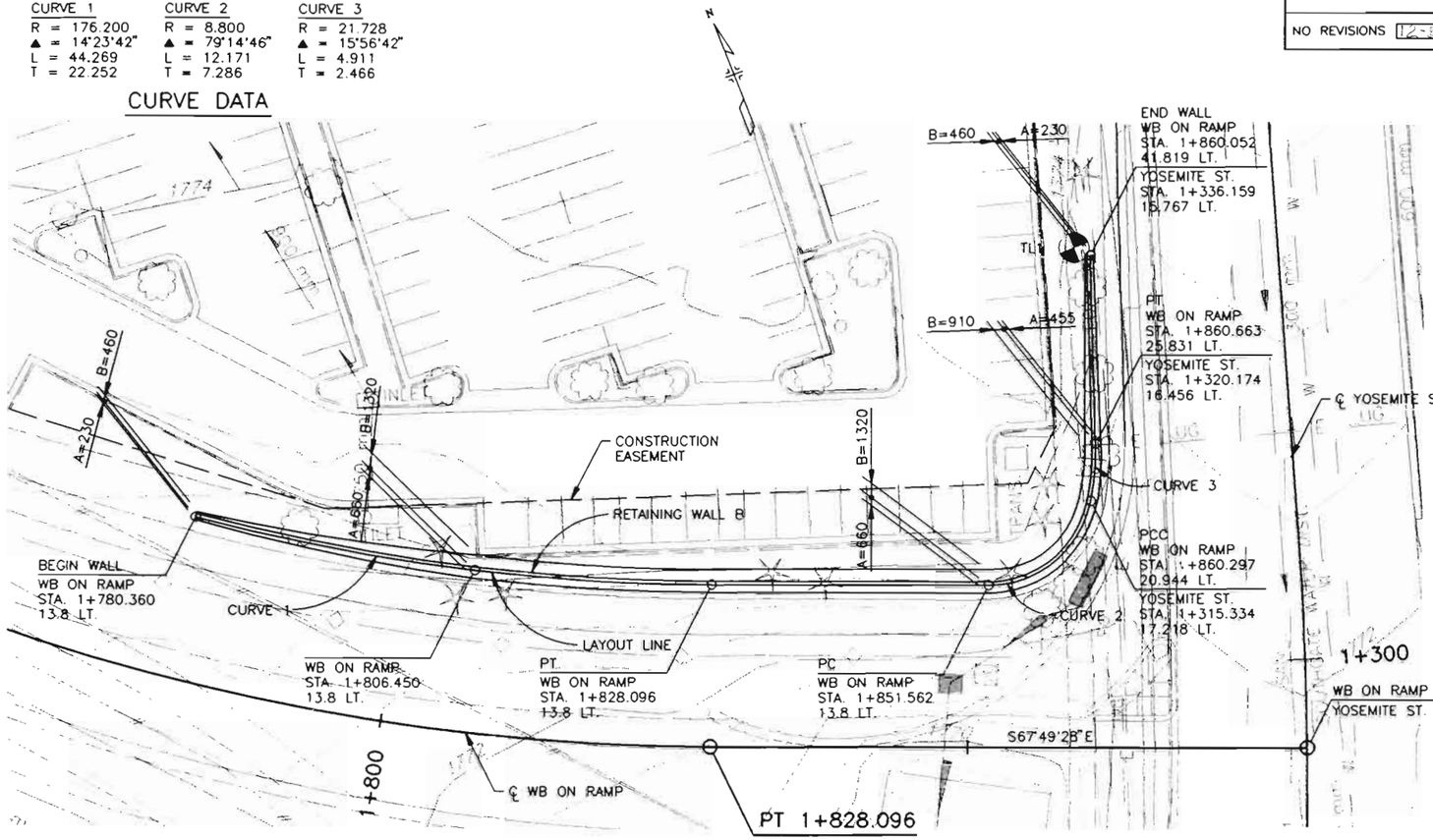

PLAN

ORIGINAL SCALE 1:250

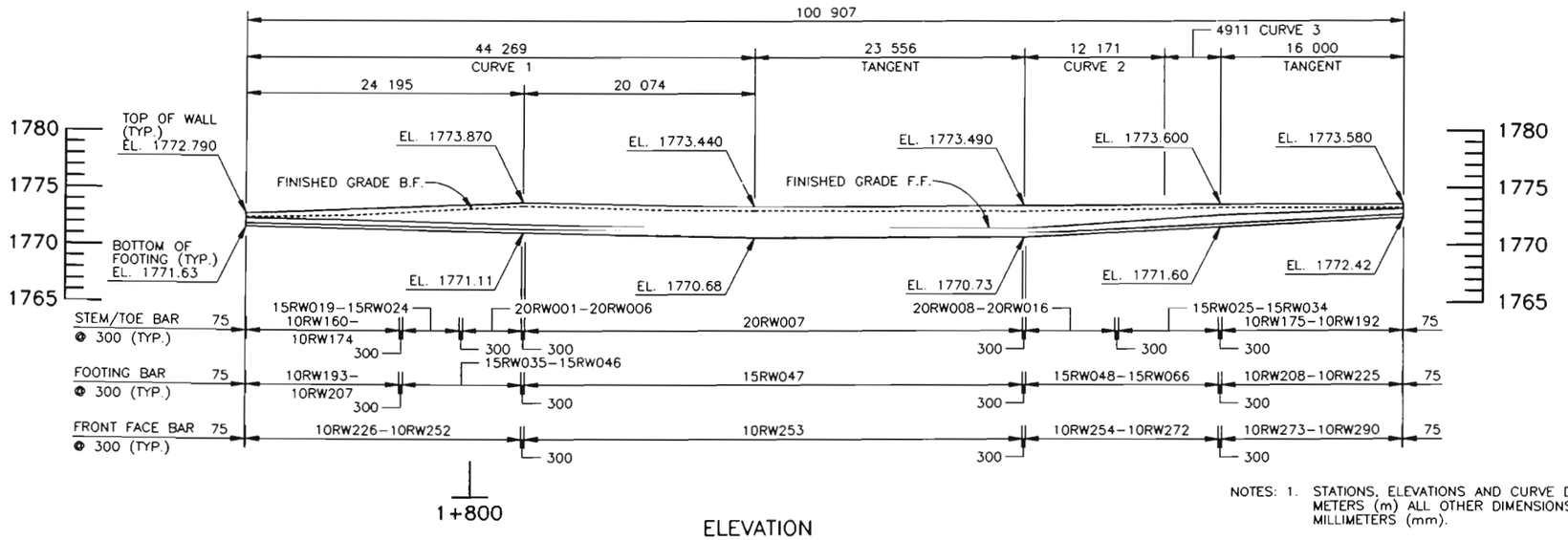

ELEVATION

ORIGINAL SCALE 1:250

NOTES: 1. STATIONS, ELEVATIONS AND CURVE DATA ARE IN METERS (m) ALL OTHER DIMENSIONS ARE IN MILLIMETERS (mm).

2. FOOTING KEY AND PIPE RAILING NOT SHOWN FOR CLARITY.

GENERAL NOTES

STRUCTURE EXCAVATION AND BACKFILL SHALL BE IN ACCORDANCE WITH M-206-1 FOR CAST-IN-PLACE RETAINING WALLS.

EXPANSION JOINT MATERIAL SHALL MEET AASHTO SPECIFICATION M-213.

EXPOSED CONCRETE SURFACES DOWN TO 300 mm BELOW FINISHED GRADE SHALL BE FINISHED WITH A CLASS 1 FINISH FOLLOWED BY AN APPLICATION OF COLORED COATING MEETING THE REQUIREMENTS OF THE SPECIAL PROVISIONS TO SECTION 601 STRUCTURAL CONCRETE (COATING). THE STRUCTURAL CONCRETE COATING SHALL BE EQUIVALENT TO FEDERAL STANDARD 595B COLOR NO. 31667.

PIPE RAILING STEEL SHALL BE ASTM A53M, TYPE E OR S, GRADE A, SCHEDULE 40 OR BETTER. PIPE ENDS SHALL BE FREE OF BURRS. WELD ALL JOINTS ALL AROUND WITH 3 mm REINFORCED WELDS AND DRESS SMOOTH.

PIPE RAILING SHALL BE PAINTED IN ACCORDANCE WITH SECTION 509 OF THE STANDARD SPECIFICATIONS. THE COLOR SHALL BE EQUIVALENT TO FEDERAL STANDARD 595B COLOR NO. 30219.

ALL DIMENSIONS ARE IN MILLIMETERS UNLESS OTHERWISE NOTED.

ALL REINFORCING STEEL DESIGNATIONS ARE METRIC.

GRADE 400 REINFORCING STEEL IS REQUIRED.

ALL REINFORCING STEEL SHALL BE NON EPOXY COATED.

THE FOLLOWING TABLE GIVES THE MINIMUM LAP SPLICE LENGTH FOR REINFORCING BARS:

BAR SIZE	#10M	#15M	#20M
SPLICE LENGTH FOR CLASS B CONCRETE	360	505	620

VERTICAL REINFORCING MAY BE SPLICED ONCE EACH BAR AT THE CONTRACTORS OPTION. THE INCREASE QUANTITY OF REINFORCING WILL BE AT THE CONTRACTORS EXPENSE.

IF THE CONTRACTOR ELECTS TO SUBSTITUTE EPOXY COATED REINFORCEMENT FOR BLACK STEEL BARS, THE MINIMUM LAP SPLICE DESCRIBED ABOVE SHALL BE INCREASED BY A FACTOR OF 1.15.

THE CONTRACTOR SHALL BE RESPONSIBLE FOR THE STABILITY OF THE STRUCTURE DURING CONSTRUCTION.

E.F. = EACH FACE
F.F. = FAR FACE
N.F. = NEAR FACE

THE INFORMATION SHOWN ON THESE PLANS CONCERNING THE TYPE AND LOCATION OF UNDERGROUND UTILITIES IS NOT GUARANTEED TO BE ACCURATE OR ALL INCLUSIVE. THE CONTRACTOR IS RESPONSIBLE FOR MAKING HIS OWN DETERMINATION AS TO THE TYPE AND LOCATION OF UNDERGROUND UTILITIES AS MAY BE NECESSARY TO AVOID DAMAGE THERETO. THE CONTRACTOR SHALL CONTACT THE UTILITY NOTIFICATION CENTER OF COLORADO AT 1-800-922-1987 (534-6700 IN METRO DENVER) AT LEAST 2 DAYS (NOT INCLUDING THE DAY OF NOTIFICATION) PRIOR TO ANY EXCAVATION OR OTHER EARTHWORK.

DESIGN DATA

AASHTO, 15th EDITION with 1994 interims.

LIVE LOAD: 600 mm LIVE LOAD SURCHARGE FOR WALLS > 1.75 m HEIGHT
EARTH LOAD: 18.857 KM/m3 , ⌀=34°
3:1 BACKFILL SLOPE

REINFORCED CONCRETE:

CLASS B CONCRETE: f'c = 25 MPa
REINFORCING STEEL: fy = 400 MPa

DESIGN	Initial	Date
Designed by	DOG	11-95
Checked by	EPL	1-96
Detailed by	SED	11-95
Checked by	DOG	11-95
Quantities by	DOG	11-95
Checked by	EPL	1-96

QUANTITIES

COLORADO DEPARTMENT OF TRANSPORTATION

C-470/YOSEMITE INTERCHANGE
RETAINING WALL B
GENERAL LAYOUT

FELSBURG HOLT & ULLEVIG

Designer D. GROENEMAN	Structure	
Detailer S. DANKENBRING	Numbers	WALL A, WALL B
Drawing Number RW2 of 4	Drawings	

Revision Dates (Preliminary Stage Only)

AS CONSTRUCTED

NO REVISIONS | REVISED | VOID

FEDERAL RD REGION NO.	DIVISION	PROJ. NO.	SHEET NO.	TOTAL SHEETS
VIII	COLORADO	CC 4701-082	41	154

REVISIONS		

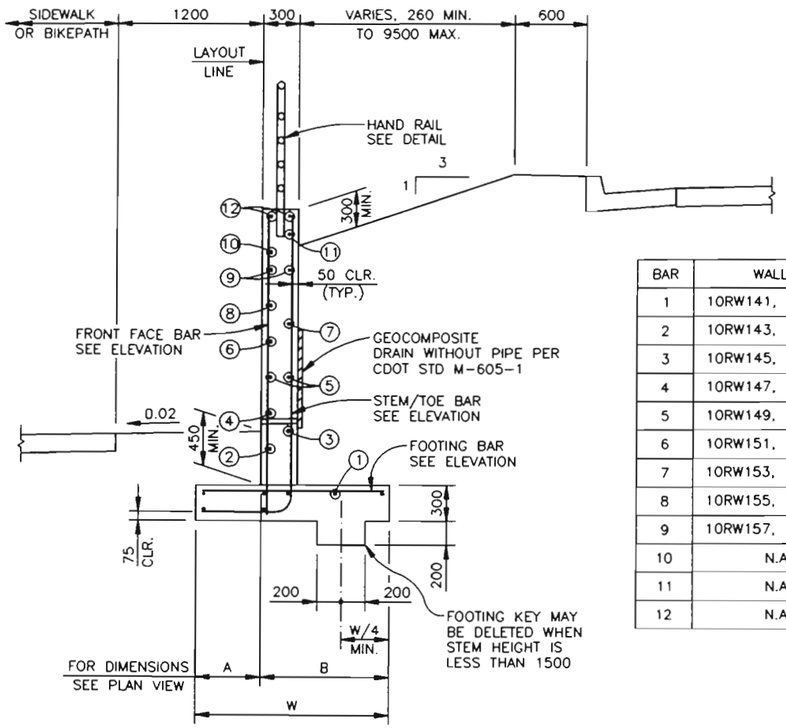

TYPICAL SECTION

ORIGINAL SCALE 1:25

NOTES:

1. FF LONGITUDINAL BARS ARE SPACED @ 300
2. BF LONGITUDINAL BARS ARE SPACED @ 450
3. LONGITUDINAL BARS ARE TO BE FIELD BENT TO MATCH CURVATURE OF THE WALL.

BAR	WALL A	WALL B
1	10RW141, 10RW142	10RW291, 10RW292
2	10RW143, 10RW144	10RW293, 10RW294
3	10RW145, 10RW146	10RW295, 10RW296
4	10RW147, 10RW148	10RW297, 10RW298
5	10RW149, 10RW150	10RW299, 10RW300
6	10RW151, 10RW152	10RW301, 10RW302
7	10RW153, 10RW154	10RW303, 10RW304
8	10RW155, 10RW156	10RW305, 10RW306
9	10RW157, 10RW158	10RW307, 10RW308
10	N.A.	10RW309, 10RW310
11	N.A.	10RW311, 10RW312
12	N.A.	10RW313, 10RW314

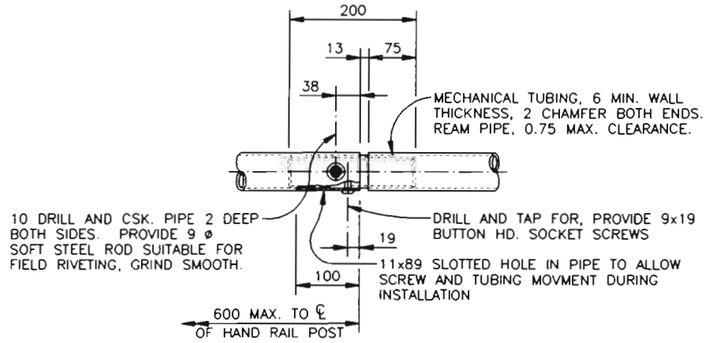

SPLICE DETAIL

SPLICES ARE TO BE PLACED THROUGH EACH RAIL ELEMENT AT 12 400 MAX. SPACING

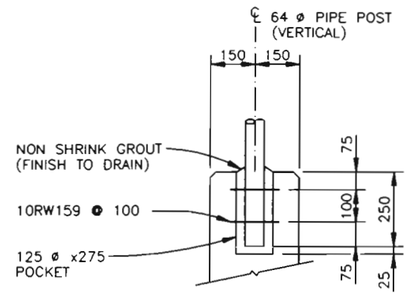

POST POCKET DETAIL

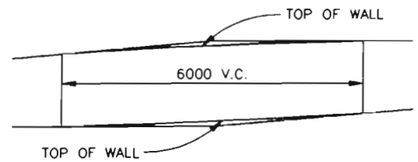

6000 V.C. AT TOP OF WALL SLOPE CHANGE

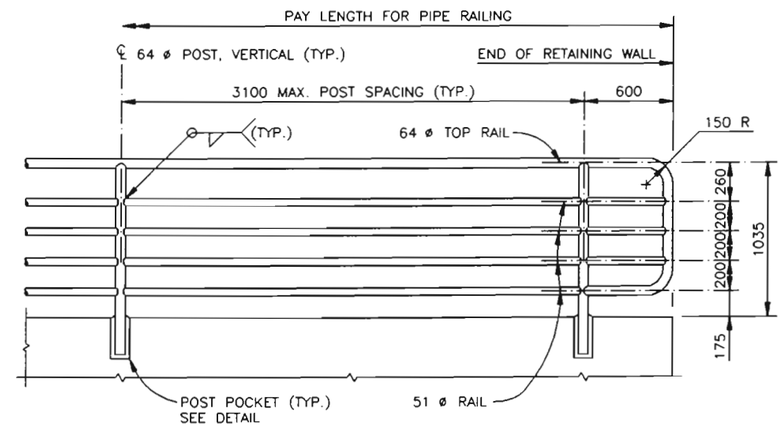

HAND RAIL DETAIL

ORIGINAL SCALE 1:20

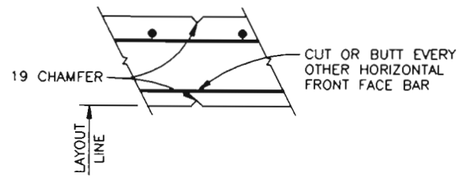

WEAKENED PLANE

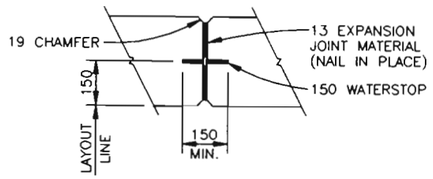

EXPANSION JOINT

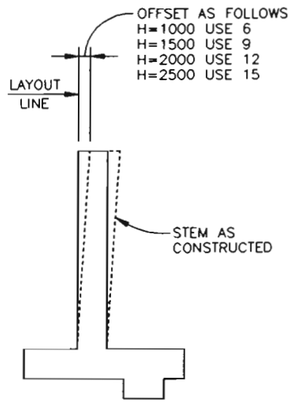

APPROX. WALL OFFSETS

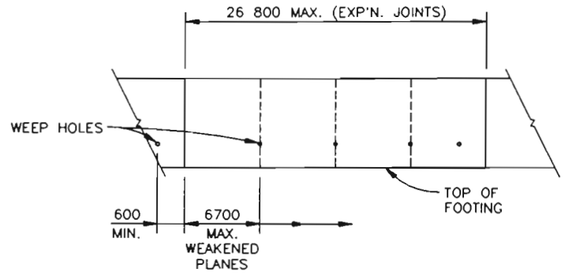

WALL EXPANSION JOINTS AND WEAKENED PLANES

DESIGN: Designed by — Checked by; Initial DOG EPL; Date 11-95 1-96

DETAIL: Detailed by — Checked by; Initial SED DOG; Date 11-95 11-95

QUANTITIES: Quantities by — Checked by; Initial DOG EPL; Date 11-95 1-96

FELSBURG HOLT & ULLEVIG

COLORADO DEPARTMENT OF TRANSPORTATION

C-470/YOSEMITE INTERCHANGE
RETAINING WALL DETAILS

Designer D. GROENEMAN	Structure	
Detailer S. DANKENBRING	Numbers	WALL A, WALL B
Drawing Number RW3 of 4 Drawings		

Revision Dates (Preliminary Stage Only)

AS CONSTRUCTED

NO REVISIONS [ ] REVISED [ ] VOID [ ]

FEDERAL RD REGION NO.	DIVISION	PROJ. NO.	SHEET NO.	TOTAL SHEETS
VIII	COLORADO	CC 4701-082	42	154

REVISIONS

DETAIL — Initial: SED / DOG — Date: 11-95 / 11-95 — by: Detailed by: / Checked by:

QUANTITIES — Initial: DOG / EPL — Date: 11-95 / 1-96 — by: Quantities by: / Checked by:

DESIGN — Initial: DOG / EPL — Date: 11-95 / 1-96 — by: Designed by: / Checked by:

BAR LIST – RETAINING WALL A

Mark	No. Req'd.	Length	Type	Dimensions A	B	C
10RW001		1465		430	1035	
	8EA	BEI	I			
10RW011		2485		645	1840	
10RW012		2545		655	1890	
	5EA	BEI	I			
10RW026		1935		530	1405	
10RW027		1910		525	1385	
	5EA	BEI	I			
10RW043		1465		430	1035	
10RW044		590				
	8EA	BEI	—			
10RW054		1235				
10RW055		1275				
	5EA	BEI	—			
10RW069		890				
10RW070		870				
	5EA	BEI	—			
10RW086		590				
10RW087		1035				
	4EA	BEI	—			
10RW113		2065				
10RW114		2035				
	10EA	BEI	—			
10RW123		1405				
10RW124		1385				
	5EA	BEI	—			
10RW140		1035				
10RW141	49	12000	—			
10RW142	7	6120	—			
10RW143	7	12000	—			
10RW144	1	6120	—			
10RW145	7	12000	—			
10RW146	1	6120	—			
10RW147	7	12000	—			
10RW148	1	6120	—			
10RW149	14	12000	—			
10RW150	2	1666	—			
10RW151	4	12000	—			
10RW152	1	6882	—			
10RW153	3	12000	—			
10RW154	1	6954	—			
10RW155	2	12000	—			

BAR LIST – RETAINING WALL A

Mark	No. Req'd.	Length	Type	Dimensions A	B	C
10RW156	1	7652	—			
10RW157	14	12000	—			
10RW158	2	6120	—			
10RW159	29	990	II	230	150	115
15RW001		2585		665	1920	
	5EA	BEI	I			
15RW004		2760		700	2060	
15RW005		2775		705	2070	
	5EA	BEI	I			
15RW009		2590		665	1925	
15RW010		1295				
	5EA	BEI	—			
15RW013		1410				
15RW014		1415				
	5EA	BEI	—			
15RW018		1300				

BAR SUMMARY – RETAINING WALL A

2562.00 m	#10M @ 0.785 kg/m	=	2011 kg
181.50 m	#15M @ 1.570 kg/m	=	285 kg
		Total =	2296 kg

The "Mark" is intended to show location and size of the reinforcing. (ex. In 10PXXX, "P" means pier. The two digits before the letter indicate size: 10=#10M, 25=#25M, etc.)

BEI = By Equal Increments

ALL REINFORCING STEEL IS NON EPOXY COATED.

BENDING DIAGRAMS
Dimensions are out to out of bars.

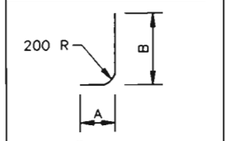

Type I

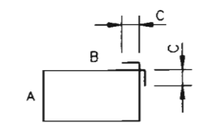

Type II

BAR LIST – RETAINING WALL B

Mark	No. Req'd.	Length	Type	Dimensions A	B	C
10RW160		1465		430	1035	
	3EA	BEI	I			
10RW174		2515		650	1865	
10RW175		2465		640	1825	
	3EA	BEI	I			
10RW192		1465		430	1035	
10RW193		590				
	3EA	BEI	—			
10RW207		1260				
10RW208		1225				
	3EA	BEI	—			
10RW225		590				
10RW226		1035				
	3EA	BEI	—			
10RW252		2575				
10RW253	145	2635	—			
10RW254		2595				
	3EA	BEI	—			
10RW272		1875				
10RW273		1825				
	3EA	BEI	—			
10RW290		1035				
10RW291	56	12000	—			
10RW292	7	7687	—			
10RW293	8	12000	—			
10RW294	1	7687	—			
10RW295	8	12000	—			
10RW296	1	7687	—			
10RW297	8	12000	—			
10RW298	1	7687	—			
10RW299	8	12000	—			
10RW300	1	6215	—			
10RW301	7	12000	—			
10RW302	1	7605	—			
10RW303	7	12000	—			
10RW304	1	2479	—			
10RW305	6	12000	—			
10RW306	1	4124	—			
10RW307	5	12000	—			
10RW308	1	10020	—			

BAR LIST – RETAINING WALL B

Mark	No. Req'd.	Length	Type	Dimensions A	B	C
10RW309	4	12000	—			
10RW310	1	10380	—			
10RW311	4	12000	—			
10RW312	1	4740	—			
10RW313	8	12000	—			
10RW314	1	7687	—			
10RW159	34	990	II	230	150	115
15RW019		2595		670	1925	
	3EA	BEI	I			
15RW024		2980		745	2235	
15RW025		2985		750	2235	
	3EA	BEI	I			
15RW034		2530		655	1875	
15RW035		1305				
	3EA	BEI	—			
15RW046		1830				
15RW047	145	1880	—			
15RW048		1845				
	3EA	BEI	—			
15RW066		1265				
20RW001		3055		760	2295	
	3EA	BEI	I			
20RW006		3415		840	2575	
20RW007	145	3495	I	860	2635	
20RW008		3440		845	2595	
	3EA	BEI	I			
20RW016		3035		760	2275	

BAR SUMMARY – RETAINING WALL B

2730.96 m	#10M @ 0.785 kg/m	=	2144 kg
553.56 m	#15M @ 1.570 kg/m	=	869 kg
652.42 m	#20M @ 2.355 kg/m	=	1536 kg
		Total =	4549 kg

FELSBURG HOLT & ULLEVIG

COLORADO DEPARTMENT OF TRANSPORTATION

C-470/YOSEMITE INTERCHANGE
BAR LISTS

Designer D. GROENEMAN	Structure Numbers	
Detailer S. DANKENBRING		WALL A, WALL B
Drawing Number RW4 of 4		Drawings

Revision Dates (Preliminary Stage Only)

AS CONSTRUCTED

NO REVISIONS ☐ REVISED 12-3-96 VOID ☐

FEDERAL RD REGION NO.	DIVISION	PROJ. NO.	SHEET NO.	TOTAL SHEETS
VIII	COLORADO	CC 4701-082	43	454

REVISIONS		

GENERAL NOTES

STRUCTURE EXCAVATION AND BACKFILL SHALL BE IN ACCORDANCE WITH DRAWING NUMBER B18, EXCAVETION AND BACKFILL FOR BRIDGES IN CUT, FOR ABUTMENTS, PIERS AND WINGWALLS, AND WITH M-206-1 FOR CAST-IN-PLACE RETAINING WALLS.

EXPANSION JOINT MATERIAL SHALL MEET AASHTO SPECIFICATION M-213.

ALL EXPOSED CONCRETE SURFACES DOWN TO 300 mm BELOW FINISHED GRADE SHALL RECEIVE A CLASS I FINISH FOLLOWED BY AN APPLICATION OF COLORED COATING MEETING THE REQUIREMENTS TO SECTION 601 OF THE SPECIAL PROVISIONS OF THE SPECIFICATIONS. THE COLORS WILL BE AS DIRECTED BY THE ENGINEER AND WILL BE SELECTED FROM TEST PANELS PROVIDED BY THE CONTRACTOR TO MATCH EXISTING. COATING SHALL BE PROVIDED AT THE LOCATIONS SHOWN ON THE PLANS.

THE FOLLOWING STRUCTURAL STEEL SHALL BE AASHTO M-183M (ASTM A-36M): DIAPHRAGMS AND PILING.

ALL BOLTS SHALL BE M22, HIGH STRENGTH (M-164M/A-325M), UNLESS OTHERWISE NOTED.

ALL DIMENSIONS ARE IN MILLIMETERS UNLESS OTHERWISE NOTED.

ALL REINFORCING STEEL DESIGNATIONS ARE METRIC.

GRADE 400 REINFORCING STEEL IS REQUIRED.

(E) DENOTES EPOXY COATED REINFORCING STEEL.

THE FOLLOWING TABLE GIVES THE MINIMUM LAP SPLICE LENGTH FOR REINFORCING BARS:

BAR SIZE	#10M	#15M	#20M	#25M	#30M	#35M
SPLICE LENGTH FOR CLASS B CONCRETE	320	450	550	910	1270	1820
SPLICE LENGTH FOR CLASS D CONCRETE	320	450	550	770	1080	1540

WHEN THE CONTRACTOR ELECTS TO SUBSTITUTE EPOXY COATED REINFORCEMENT FOR BLACK STEEL BARS, THE MINIMUM LAP SPLICE SHALL BE AS DESCRIBED ABOVE.

THE CONTRACTOR SHALL BE RESPONSIBLE FOR THE STABILITY OF THE STRUCTURE DURING CONSTRUCTION. THE CONTRACTOR SHALL DESIGN AND PROVIDE BRACING AT PIER 2 BEFORE DRILLING FOR DOWEL PLACEMENT BEGINS. SEE PIER 2 PLAN SHEET FOR DETAILS.

ALL DRILLING AND GROUTING WILL BE INCIDENTAL TO WORK.

E.F. = EACH FACE
F.F. = FAR FACE
N.F. = NEAR FACE

PERMANENT STEEL DECK FORMS AND PRECAST PANEL DECK FORMS ARE NOT ALLOWED.

FOR STRUCTURE NUMBER INSTALLATION, SEE STANDARD S-614-12.

STATIONS AND ELEVATIONS CONTAINED IN THESE PLANS ARE CALCULATED FROM A RECENT FIELD SURVEY.
DIMENSIONS ARE CALCULATED FROM THE "AS CONSTRUCTED PLANS". THESE STATIONS, ELEVATIONS, AND DIMENSIONS MAY BE ADJUSTED TO MEET THE EXISTING STRUCTURE. THE CONTRACTOR SHALL VERIFY ALL DEPENDENT DIMENSIONS IN THE FIELD BEFORE ORDERING OR FABRICATING ANY MATERIAL.

THE BITUMINOUS PAVEMENT SHALL BE REMOVED FROM THE EXISTING STRUCTURE AS INDICATED ON THE PLANS AND REPLACED TO THE GRADE AND CROSS SLOPE OF THE EXISTING CONCRETE DECK. IF ADDITIONAL DECK PREPARATION IS REQUIRED IT SHALL BE INCLUDED AS EXTRA WORK.

THE INFORMATION SHOWN ON THESE PLANS CONCERNING THE TYPE AND LOCATION OF UNDERGROUND UTILITIES IS NOT GUARANTEED TO BE ACCURATE OR ALL INCLUSIVE. THE CONTRACTOR IS RESPONSIBLE FOR MAKING HIS OWN DETERMINATION AS TO THE TYPE AND LOCATION OF UNDERGROUND UTILITIES AS MAY BE NECESSARY TO AVOID DAMAGE THERETO. THE CONTRACTOR SHALL CONTACT THE UTILITY NOTIFICATION CENTER OF COLORADO AT 1-800-922-1987 (534-6700 IN METRO DENVER) AT LEAST 2 DAYS (NOT INCLUDING THE DAY OF NOTIFICATION) PRIOR TO ANY EXCAVATION OR OTHER EARTHWORK.

THE CONTRACTOR SHALL DEVELOPE AND PROPOSE A TESTING METHOD TO DEMONSTRATE TO THE ENGINEER THE COMPETENTCY OF THE GROUTING SYSTEM PROVIDED. TWO OF THE 15M DOWELS AT EACH ABUTMENT AND TWO OF THE 30M BARS AT THE TOP OF THE PIER SHALL BE TESTED WITH A PROOF LOAD OF 40% OF THE YIELD STRESS OF THE BAR TIMES THE CROSS SECTIONAL AREA. THE CHEMECAL ADHESIVE PROVIDED SHALL BE RATED BY THE MANUFACTURER AS CAPABLE OF DEVELOPING THE FULL STRENGTH OF THE BAR. THE COST FOR ADHESIVES, DOWELS, AND THE DEMONSTRATION TESTING SHALL BE INCLUDED IN THE WORK.

SUMMARY OF QUANTITIES

ITEM NO.	DESCRIPTION	UNIT	ABUTMENT 1	PIER 2	ABUTMENT 3	RETAINING WALLS	SUPER-STRUCTURE	APPROACH SLABS	TOTALS
202	REMOVAL OF PORTIONS OF PRESENT STRUCTURE	LS							1
206	STRUCTURE EXCAVATION	m3	36.7	37.6	36.7	51.0			162.0
206	STRUCTURE BACKFILL (FLOW-FILL)	m3	43.6		43.6				87.2
206	STRUCTURE BACKFILL (CLASS 1)	m3	7.0		7.0	39.4			53.4
206	STRUCTURE BACKFILL (CLASS 2)	m3		26.2					26.2
403	HOT BITUMINOUS PAVEMENT (GRADING C)(ASPHALT)(520)	t					24.6	4.6	29.2
502	STEEL PILING (HP 310x79)	m	26.6	41.4	35.4				103.4
507	CONCRETE SLOPE AND DITCH PAVING (REINFORCED)	m3	10.0		9.0				19.0
515	WATERPROOFING (MEMBRANE)	m2					219.1	40.8	259.9
518	BRIDGE COMPRESSION JOINT SEALER	m	2.3		2.3			9.4	14.0
601	CONCRETE CLASS B (BRIDGE)	m3	7.8	31.6	7.7				47.1
601	CONCRETE CLASS B (WALL)	m3				28.4			28.4
601	CONCRETE CLASS D (BRIDGE)	m3	6.5		6.4		52.3	15.7	80.9
601	STRUCTURAL CONCRETE COATING	m2	89.3	61.4	81.2	40.4	193.8		466.1
602	REINFORCING STEEL	kg	630	3203	619	731	3946	1010	10 139
602	REINFORCING STEEL (EPOXY COATED)	kg	112		106	267	5782	252	6519
606	BRIDGE RAIL TYPE 4 SPECIAL	m					46.0		46.0
613	50 mm ELECTRICAL CONDUIT	m					132.5		132.5
618	PRESTRESSED CONCRETE I (G1370)	m					83.7		83.7
625	CONSTRUCTION SURVEY (HOURLY)	HR							25

INDEX OF DRAWINGS

DWG. NO.	DESCRIPTION
B1	GENERAL INFORMATION AND SUMMARY OF QUANTITIES
B2	GENERAL LAYOUT
B3	ENGINEERING GEOLOGY
B4	CONSTRUCTION AND PILING LAYOUT
B5	ABUTMENT 1
B6	ABUTMENT 3
B7	WINGWALL DETAILS
B8	ABUTMENT 1 RETAINING WALL DETAILS
B9	ABUTMENT 3 RETAINING WALL DETAILS
B10	PIER 2 ELEVATION
B11	PIER 2 PLAN
B12	DECK PLAN AND SECTION
B13	COLORADO G1370 GIRDER
B14	DIAPHRAGM DETAIL
B15	SLOPE PAVING
B16	APPROACH SLAB
B17	STRUCTURE BACKFILL (FLOW-FILL)
B18	EXCAVETION AND BACKFILL FOR BRIDGES IN CUT
B19	BAR LIST
B20	BAR LIST
B21	DECK ELEVATIONS
B22	ROADWAY APPROACHES

BRIDGE DESCRIPTION

2-SPAN BRIDGE WIDENING (21 285, 20 066) CONCRETE SLAB AND PRESTRESSED GIRDER BRIDGE OVER ACRES GREEN DRIVE.

15 735 mm ROADWAY BARRIER TO BARRIER, 89°16'23.8" SKEW

533 mm BRIDGE RAIL TYPE 4

DESIGN DATA

AASHTO, 15th EDITION with 1994 interims.

LIVE LOAD: AASHTO MS22 AND ALTERNATE MILITARY LOADING
DEAD LOAD: ASSUMES 1150 Pa FOR BITUMINOUS PAVEMENT
ASSUMES 1150 Pa FOR FUTURE BITUMINOUS PAVEMENT

REINFORCED CONCRETE:

CLASS B CONCRETE: f'c = 25 MPa
CLASS D CONCRETE: f'c = 31 MPa
REINFORCING STEEL: fy = 400 MPa

DESIGN METHODS:

PILE REACTIONS, RETAINING WALL : SERVICE LOAD DESIGN
DECK, GIRDERS, PIER, ABUTMENT, WINGWALLS : LOAD FACTOR DESIGN

STRUCTURAL STEEL: AASHTO M-183M (ASTM A-36M) Fy = 250 MPa.

PRESTRESSED CONCRETE: CLASS S CONCRETE f'c = (SEE DETAILS)
f's = 1860 MPa

CROSS REFERENCE DRAWING NUMBER
(IF BLANK, REFERENCE IS TO SAME SHEET)

B
A

SECTION OR DETAIL IDENTIFICATION

FELSBURG HOLT & ULLEVIG

COLORADO DEPARTMENT OF TRANSPORTATION

GENERAL INFORMATION
SUMMARY OF QUANTITIES

Station 0+254.053 TO 0+296.572
Station
Near LITTLETON Sec. 4 T6S R67W
Designer D. GROENEMAN | Structure Numbers F-17-HO
Detailer S. DANKENBRING
Drawing Number B1 of 22 Drawings

DESIGN Designed by Initial DOG Date 11-95; Checked by EPL 11-95; Detailed by SED 11-95; Checked by DOG 11-95; Quantities by DOG 11-95; Checked by EPL 12-95; QUANTITIES

Revision Dates (Preliminary Stage Only)

AS CONSTRUCTED			
NO REVISIONS	REVISED	VOID	

FEDERAL RD REGION NO	DIVISION	PROJ. NO.	SHEET NO	TOTAL SHEETS
VIII	COLORADO	CC 4701-082	44	154

REVISIONS			

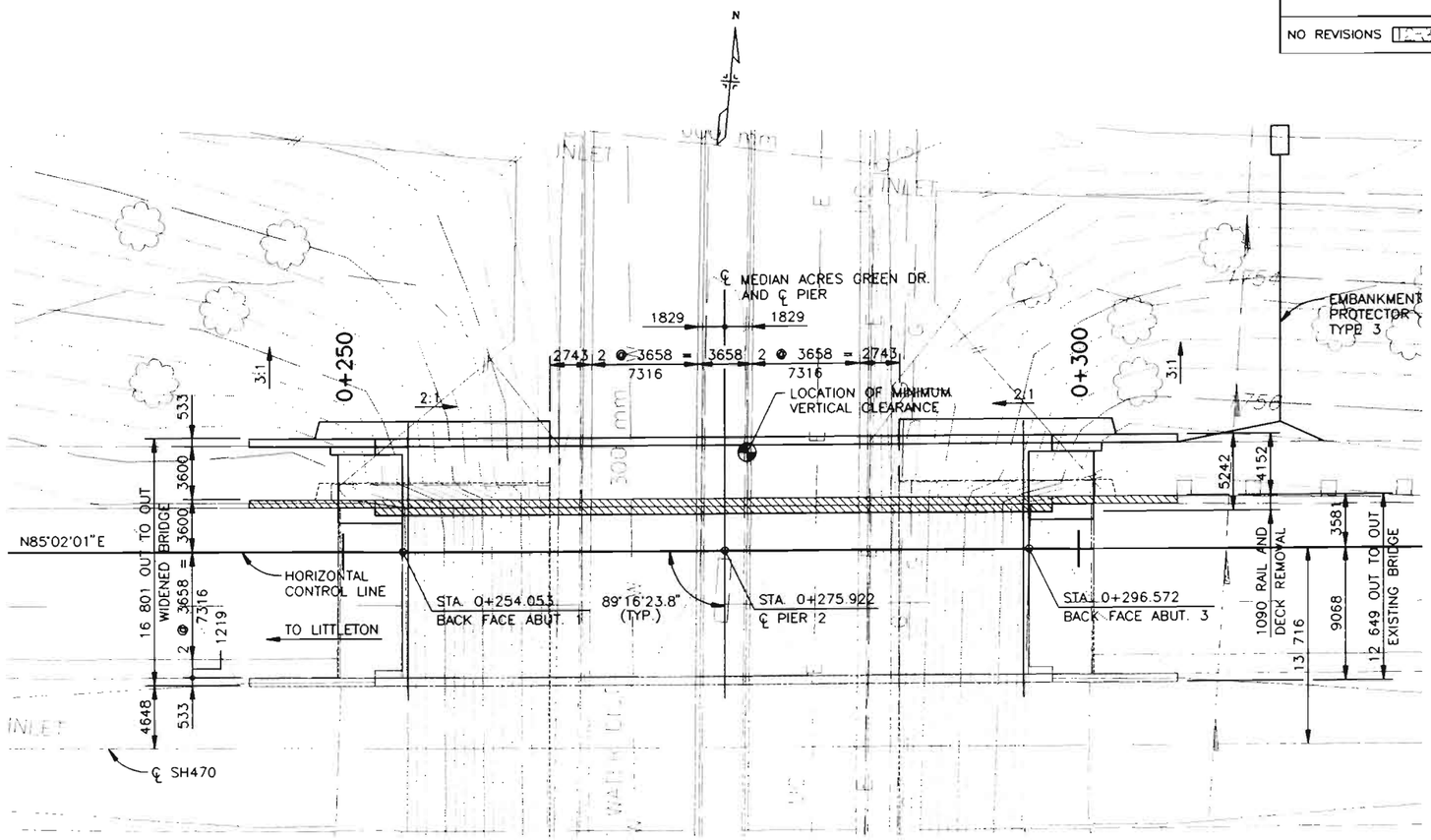

PLAN

ORIGINAL SCALE 1:200

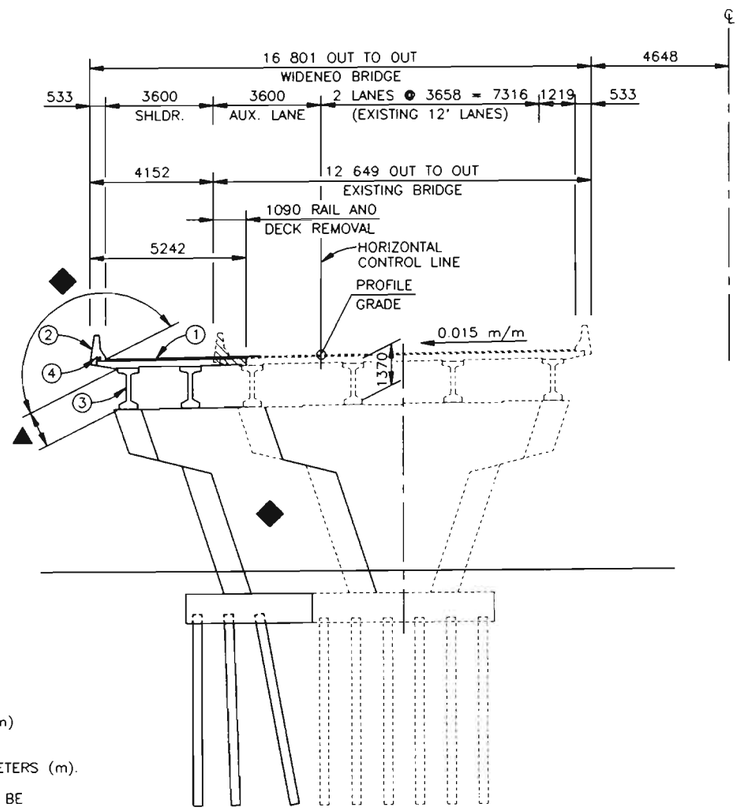

NOTES:
1. ALL DIMENSIONS ARE IN MILLIMETERS (mm) UNLESS OTHERWISE NOTED.
2. ALL ELEVATIONS AND STATIONS ARE IN METERS (m).
3. ▨ INDICATES EXISTING STRUCTURE TO BE REMOVED.

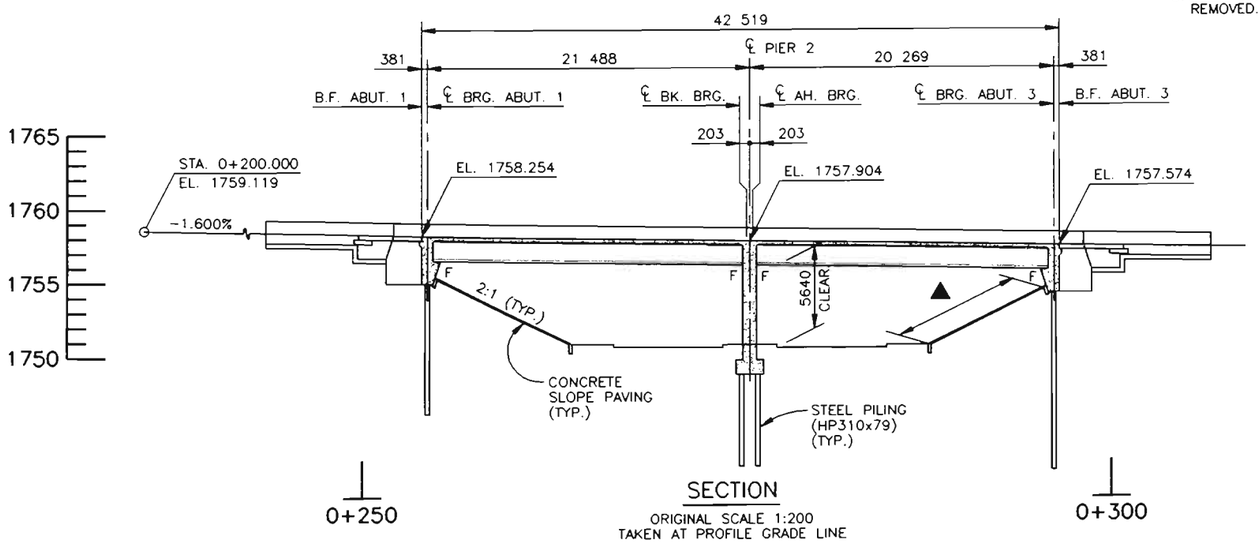

SECTION

ORIGINAL SCALE 1:200
TAKEN AT PROFILE GRADE LINE

TYPICAL SECTION

ORIGINAL SCALE 1:100

1. 50 mm HOT BITUMINOUS PAVEMENT OVER WATERPROOFING MEMBRANE (TYP.)
2. BRIDGE RAIL TYPE 4 SPECIAL (TYP.)
3. PRESTRESSED CONCRETE GIRDER (G1370)(TYP.)
4. 2-50 mm ELECTRICAL CONDUIT

◆▲ STRUCTURAL CONCRETE COATING

LIVE LOAD = MS22 AND MILITARY ALTERNATE

DESIGN	Initial	Date	DE	Initial	Date	QUANTITIES	Initial	Date
Designed by	DOC	11-95	Detailed by	SED	11-95	Quantities by	DOC	11-95
Checked by	EPL	1-96	Checked by	DOC	11-95	Checked by	EPL	12-95

FELSBURG HOLT & ULLEVIG

COLORADO DEPARTMENT OF TRANSPORTATION

WB SH470 OVER ACRES GREEN DR.
BRIDGE WIDENING
GENERAL LAYOUT

Designer D. GROENEMAN	Structure Numbers	F-17-HO
Detailer S. DANKENBRING		
Drawing Number B2 of 22	Drawings	

Revision Dates (Preliminary Stage Only)

AS CONSTRUCTED			
NO REVISIONS 12-3-96	REVISED	VOID	

FEDERAL RD REGION NO.	DIVISION	PROJ. NO.	SHEET NO.	TOTAL SHEETS
VIII	COLORADO	CC 4701-082	45	154

REVISIONS		

DESIGN										QUANTITIES									
	Initial	Date	Detailed by	Initial	Date	Designed by	Initial	Date	Quantities by	Initial	Date
Designed by	DOG	11-95	Checked by	SED	11-95	Checked by	DOG	1-96	Checked by	EPL	12-95

ORIGINAL SCALE 1:200

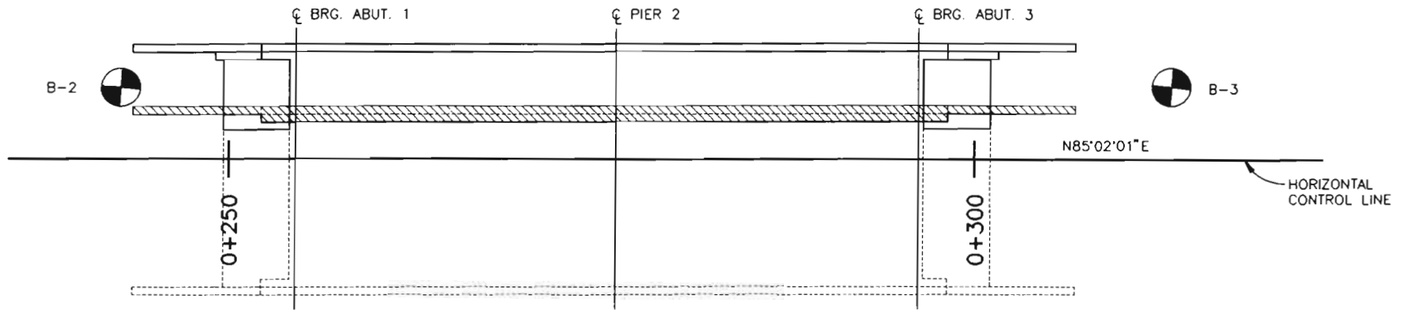

NOTES:
1. ▨ INDICATES EXISTING STRUCTURE TO BE REMOVED.
2. TEST HOLES WERE DRILLED ON 7-27-95 AND 7-28-95.

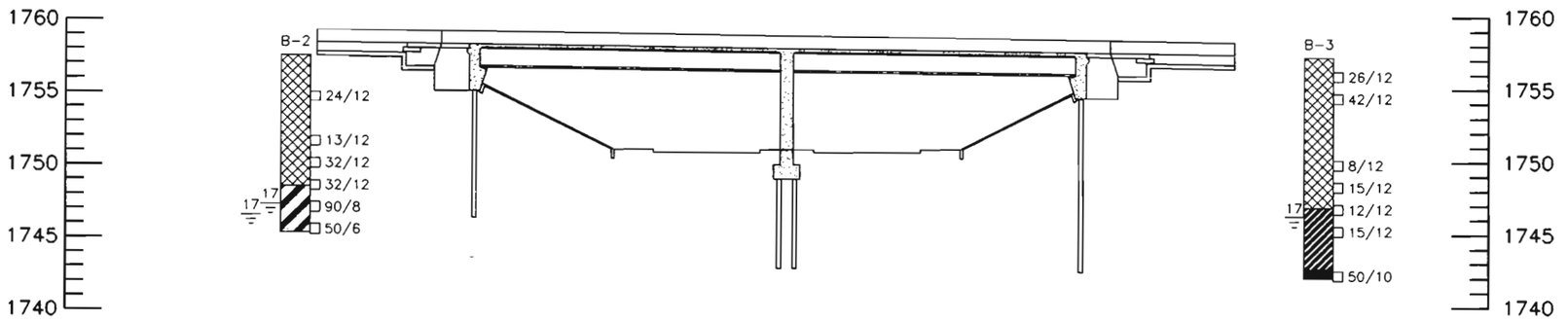

SUMMARY OF TEST RESULTS

Boring No	Depth (m)	Classification: Corps. of Engrs. of Visual	Classification: AASHTO	Grading Analysis Percent: Gravel	Coarse Sand	Fine Sand	Silt and Clay	Atterburg Limits: Liquid Limit Lw	Plastic Limit Pw	Plastic Index Iw	Water Cont. W %	Wet Unit Weight P.C.F.	Unconfined Strength Qu T.S.F.	Triaxial Shear Strength: ø	P.S.I.	Dia. of Sample (mm)

TYPE OF MATERIAL

- TOPSOIL
- FILL
- CLAY
- WEATHERED CLAYSTONE/SANDSTONE
- INTERBEDDED SANDSTONE/CLAYSTONE BEDROCK
- SANDSTONE BEDROCK
- CLAYSTONE BEDROCK

LEGEND

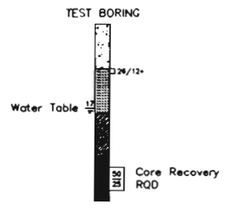

- LOCATION OF TEST BORING
- LOCATION OF CONTINUOUS PENETRATION TEST
- ROTARY BORING
- AUGER BORING

FELSBURG HOLT & ULLEVIG

COLORADO DEPARTMENT OF TRANSPORTATION

WB SH470 OVER ACRES GREEN DR.
BRIDGE WIDENING
ENGINEERING GEOLOGY

Designer D. GROENEMAN	Structure Numbers	F-17-HO	
Detailer S. DANKENBRING			
Drawing Number B3 of 22 Drawings			

Revision Dates (Preliminary Stage Only)

AS CONSTRUCTED				
NO REVISIONS ☐	REVISED ☐	VOID ☐		

FEDERAL RD REGION NO.	DIVISION	PROJ. NO.	SHEET NO.	TOTAL SHEETS
VIII	COLORADO	CC 4701-082	46	154

REVISIONS		

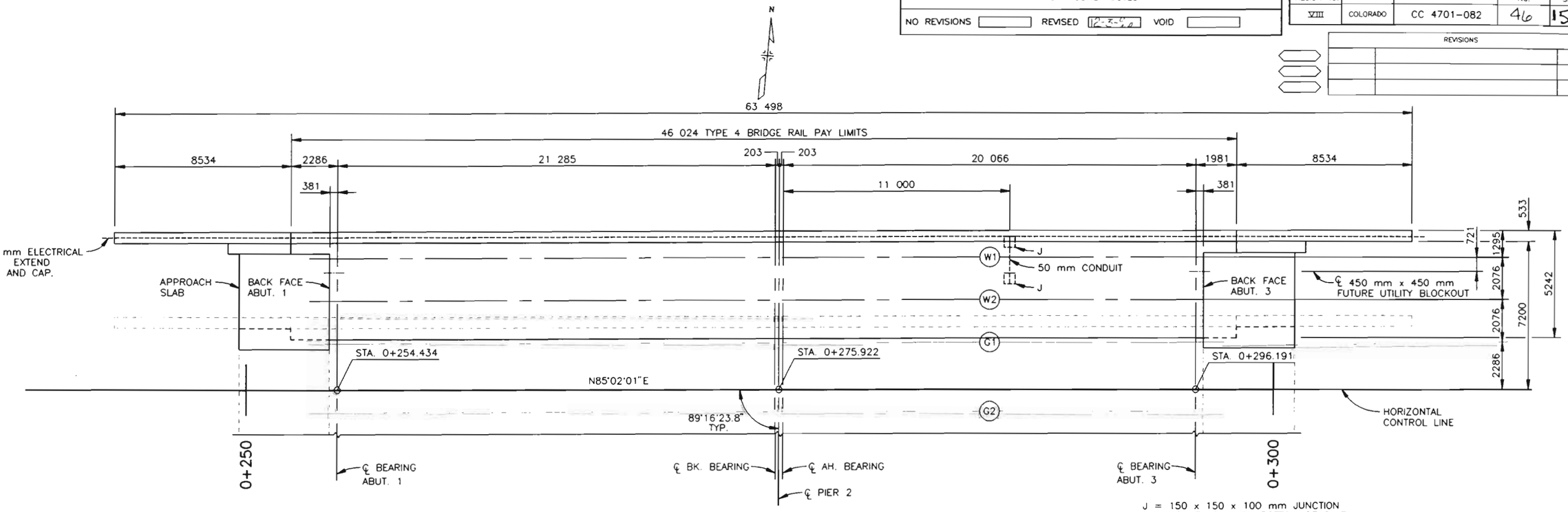

CONSTRUCTION LAYOUT

ORIGINAL SCALE 1:100
SEE DECK PLAN FOR INTERMEDIATE DIAPHRAGM LOCATIONS

J = 150 x 150 x 100 mm JUNCTION BOX FLUSH WITH BOTTOM OF SLAB. DRAIN FOR INTERIOR CONDENSATION.

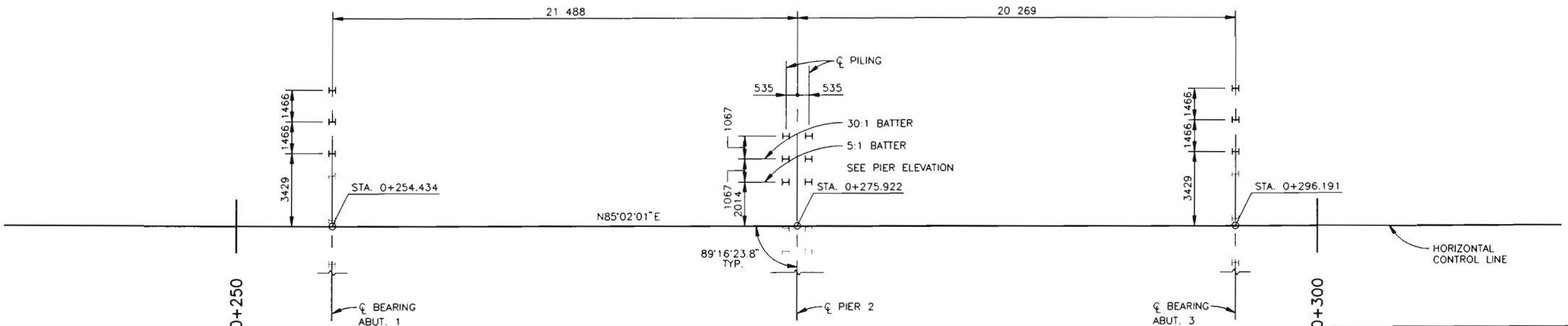

PILING LAYOUT

ORIGINAL SCALE 1:100

ESTIMATED PILE TIP ELEVATIONS		AVERAGE TIP ELEVATIONS
ABUTMENT 1	1746.2	1743.5
PIER 2	1742.4	1741.4
ABUTMENT 3	1742.6	1740.6

NOTES:

1. ALL PILING SHALL BE PLACED VERTICAL UNLESS NOTED OTHERWISE.
2. SEE PIER 2 DETAILS FOR ORIENTATION OF BATTERED PILES AT PIER 2.
3. DIMENSIONS SHOWN ARE AT THE BOTTOM OF CONCRETE.
4. ALL PILING SHALL END BEARING HP 310 X 79. MAXIMUM LOADS TO PILES ARE 567 kN AT ABUTMENTS AND 488 kN AT PIER 2.

DESIGN	Initial	Date
Designed by	DGG	11-95
Checked by	LF	1-96

DETAILS	Initial	Date
Detailed by	SED	11-95
Checked by	DGG	11-95

QUANTITIES	Initial	Date
Quantities by	DGG	11-95
Checked by	EPL	12-95

FELSBURG HOLT & ULLEVIG

COLORADO DEPARTMENT OF TRANSPORTATION

WB SH470 OVER ACRES GREEN DR.
BRIDGE WIDENING
CONSTRUCTION AND PILING LAYOUT

Designer D. GROENEMAN	Structure Numbers	F-17-HO
Detailer S. DANKENBRING		
Drawing Number B4 of 22 Drawings		

Revision Dates (Preliminary Stage Only)

AS CONSTRUCTED				
NO REVISIONS 12-22-95	REVISED	VOID		

FEDERAL RD REGION NO.	DIVISION	PROJ NO	SHEET NO.	TOTAL SHEETS
VIII	COLORADO	CC 4701-082	47	154

REVISIONS			

QUANTITIES	Initial	Date
Quantities by	DDG	11-95
Checked by	EPL	12-95

DESIGN	Initial	Date
Designed by	SED	11-95
Detailed by	EPL	11-95
Checked by	LF	11-96

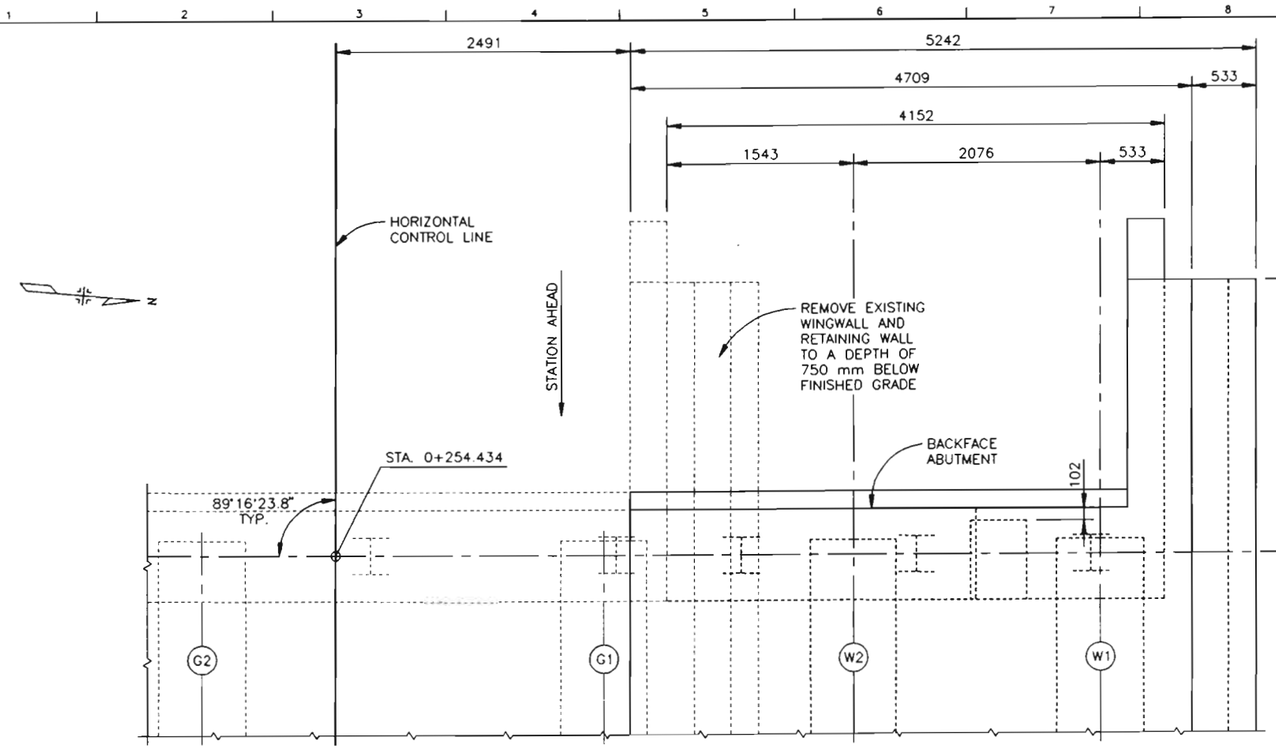

PLAN

ORIGINAL SCALE 1:25

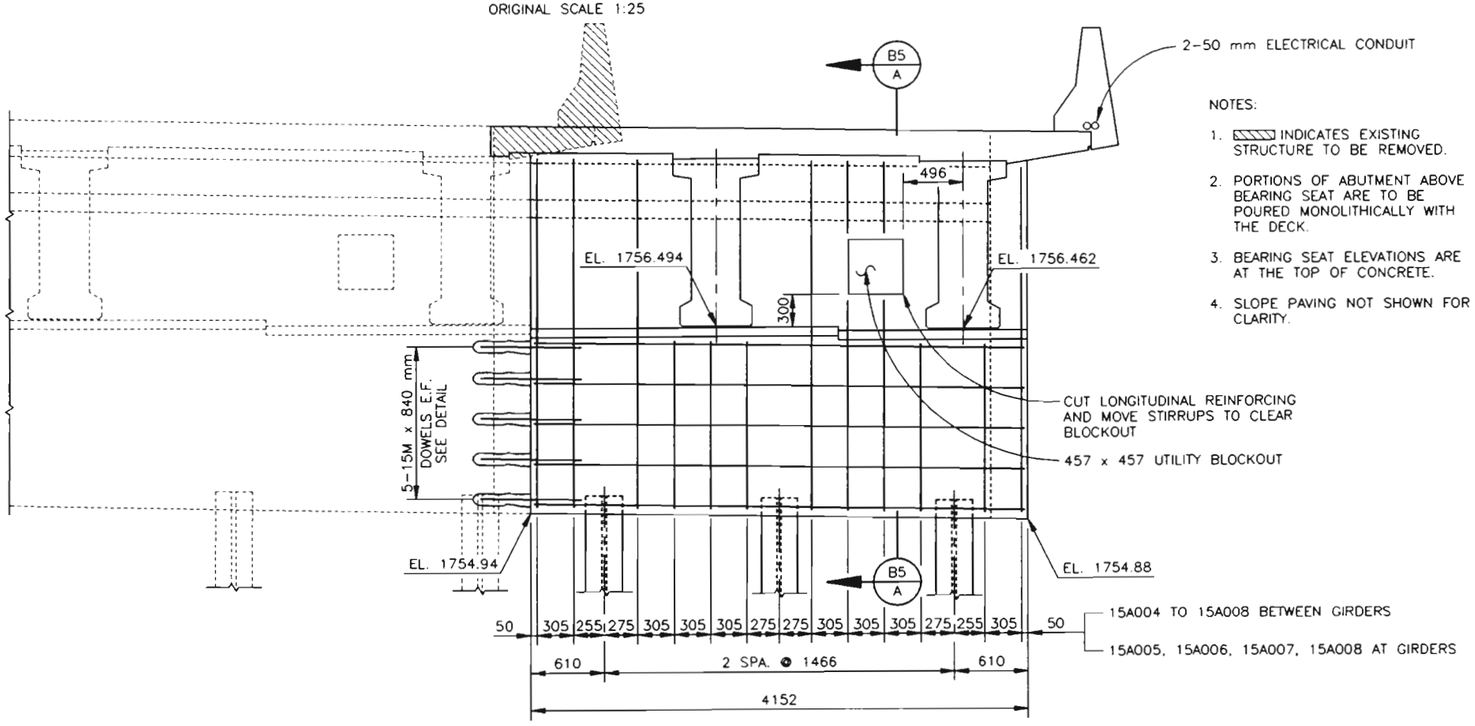

ELEVATION

ORIGINAL SCALE 1:25

NOTES:

1. ▨ INDICATES EXISTING STRUCTURE TO BE REMOVED.
2. PORTIONS OF ABUTMENT ABOVE BEARING SEAT ARE TO BE POURED MONOLITHICALLY WITH THE DECK.
3. BEARING SEAT ELEVATIONS ARE AT THE TOP OF CONCRETE.
4. SLOPE PAVING NOT SHOWN FOR CLARITY.

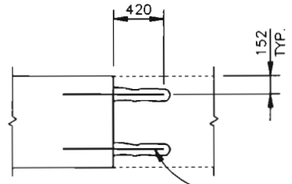

DOWEL DETAIL

ORIGINAL SCALE 1:25

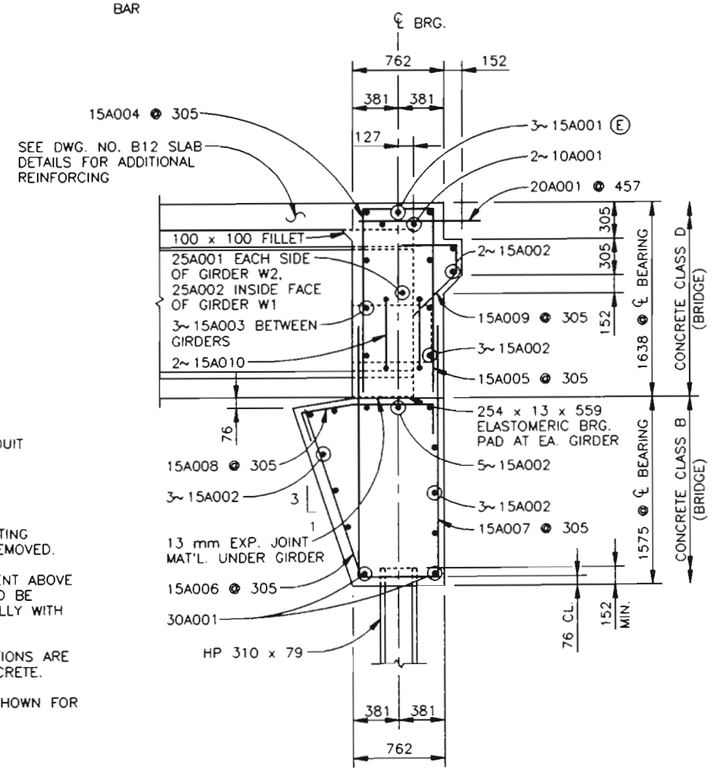

SECTION B5/A

ORIGINAL SCALE 1:25

COLORADO
DEPARTMENT OF TRANSPORTATION

WB SH470 OVER ACRES GREEN DR.
BRIDGE WIDENING
ABUTMENT 1

Designer E. LARSEN	Structure	F-17-HO
Detailer S. DANKENBRING	Numbers	
Drawing Number B5 of 22 Drawings		

FELSBURG HOLT & ULLEVIG

Revision Dates (Preliminary Stage Only)

AS CONSTRUCTED			
NO REVISIONS 12-3-02	REVISED	VOID	

FEDERAL RD REGION NO.	DIVISION	PROJ. NO.	SHEET NO.	TOTAL SHEETS
VIII	COLORADO	CC 4701-082	48	154

REVISIONS		

QUANTITIES	Initial	Date
Quantities by	DDG	11-95
Checked by	EPL	12-95

DETAILS	Initial	Date
Detailed by	SED	11-95
Checked by	EPL	11-95

DESIGN	Initial	Date
Detailed by	EPL	11-95
Checked by	LF	1-96

Designed by	
Checked by	

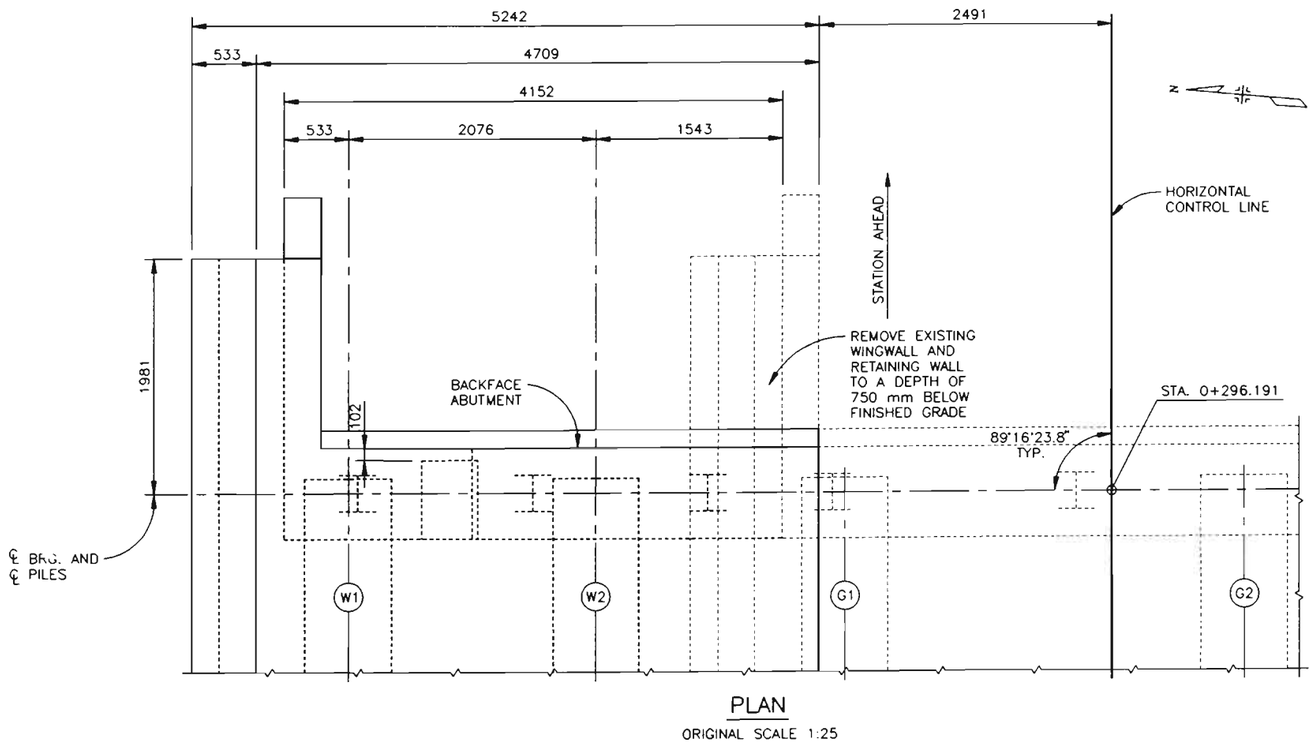

PLAN

ORIGINAL SCALE 1:25

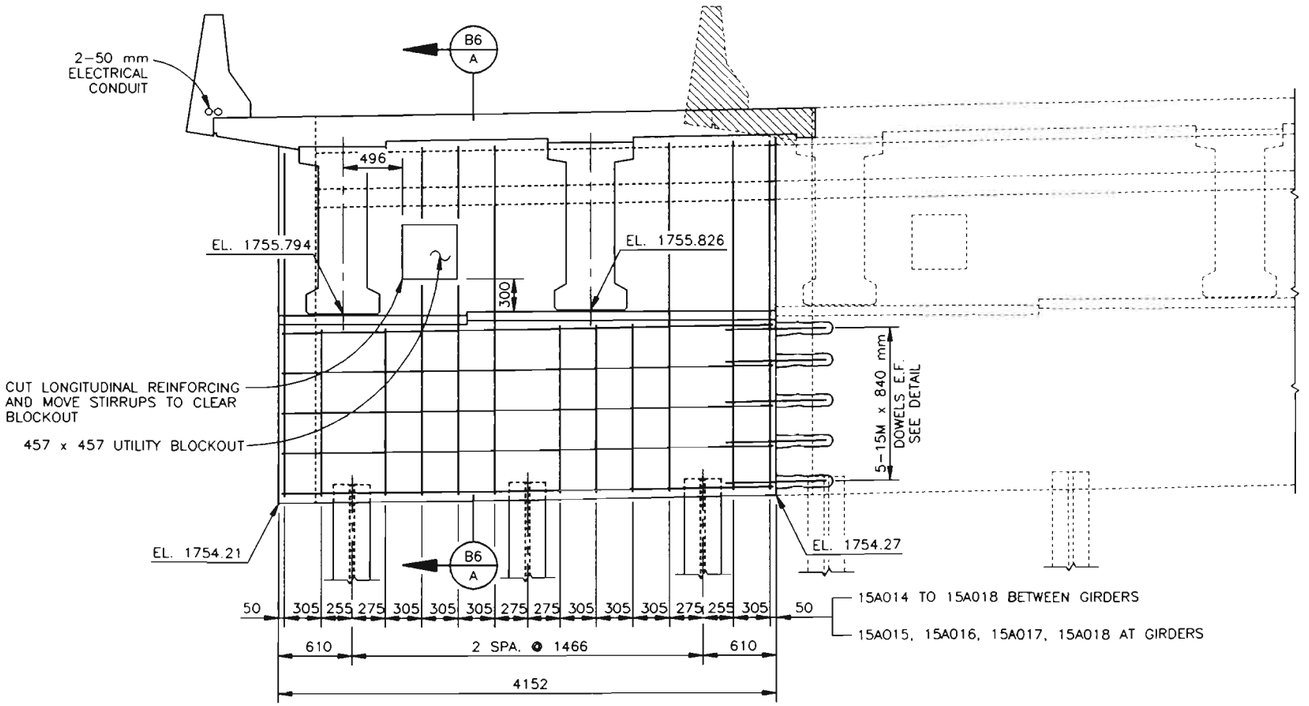

ELEVATION

ORIGINAL SCALE 1:25

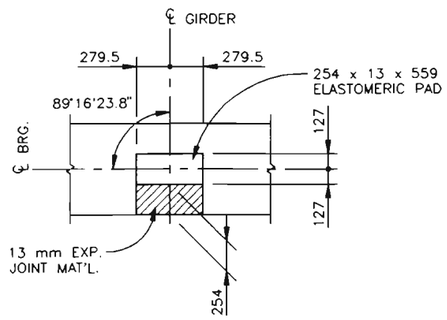

BEARING PAD DETAIL

ORIGINAL SCALE 1:25

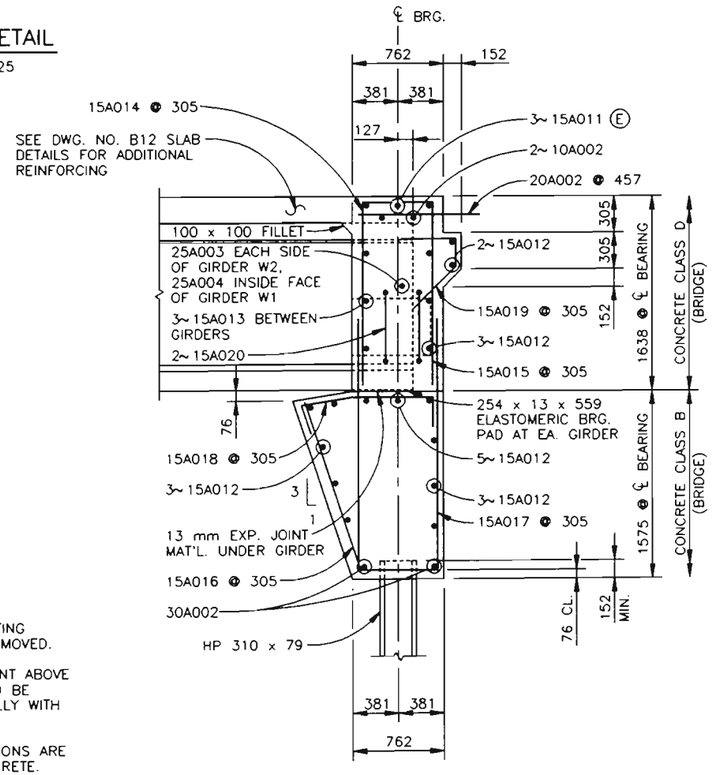

SECTION B6/A

ORIGINAL SCALE 1:25

NOTES:

1. ▨ INDICATES EXISTING STRUCTURE TO BE REMOVED.
2. PORTIONS OF ABUTMENT ABOVE BEARING SEAT ARE TO BE POURED MONOLITHICALLY WITH THE DECK.
3. BEARING SEAT ELEVATIONS ARE AT THE TOP OF CONCRETE.
4. SLOPE PAVING NOT SHOWN FOR CLARITY.

COLORADO
DEPARTMENT OF TRANSPORTATION

WB SH470 OVER ACRES GREEN DR.
BRIDGE WIDENING
ABUTMENT 3

Designer E. LARSEN	Structure	F-17-HO
Detailer S. DANKENBRING	Numbers	
Drawing Number B6	of 22	Drawings

FELSBURG HOLT & ULLEVIG

Revision Dates	(Preliminary Stage Only)					

FEDERAL RD. REGION NO.	DIVISION	PROJ. NO	SHEET NO	TOTAL SHEETS
VIII	COLORADO	CC 4701-082	49	154

REVISIONS

PLAN–ABUTMENT 3

PLAN–ABUTMENT 1

SECTION B7/A

NOTES:

1. 15W002 TO 15W006 AT ABUT. 1 TOP TO BOTTOM
   15W017 TO 15W021 AT ABUT. 3 TOP TO BOTTOM
2. 10W002 TO 10W005 AT ABUT. 1 TOP TO BOTTOM
   10W014 TO 10W017 AT ABUT. 3 TOP TO BOTTOM

ELEVATION–ABUTMENT 3

ELEVATION–ABUTMENT 1

NOTE: PROVIDE FLEXIBLE EXPANSION FITTING IN 50 mm ELECTRICAL CONDUIT BETWEEN WINGWALLS AND RETAINING WALLS.

VIEW AT END OF WING

SECTION B7/B

FELSBURG
HOLT &
ULLEVIG

COLORADO
DEPARTMENT OF TRANSPORTATION

WB SH470 OVER ACRES GREEN DR.
BRIDGE WIDENING
WINGWALL DETAILS

Designer E. LARSEN	Structure Numbers	F-17-HO	
Detailer S. DANKENBRING			
Drawing Number B7	of 22	Drawings	

Revision Dates (Preliminary Stage Only)

DESIGN			DETAIL			QUANTITIES		
	Initial	Date		Initial	Date		Initial	Date
Designed by	EPL	11-95	Detailed by	SED	11-95	Quantities by	DDG	11-95
Checked by	LF	1-96	Checked by	EPL	11-95	Checked by	EPL	12-95

AS CONSTRUCTED				
NO REVISIONS 12-3-96	REVISED		VOID	

FEDERAL RD REGION NO.	DIVISION	PROJ. NO.	SHEET NO.	TOTAL SHEETS
VIII	COLORADO	CC 4701-082	50	154

REVISIONS			

DESIGN	Initial	Date
Designed by	EPL	11-95
Checked by	DDG	1-96

DETAIL	Initial	Date
Detailed by	SED	11-95
Checked by	EPL	11-95

QUANTITIES	Initial	Date
Quantities by	DDG	11-95
Checked by	EPL	12-95

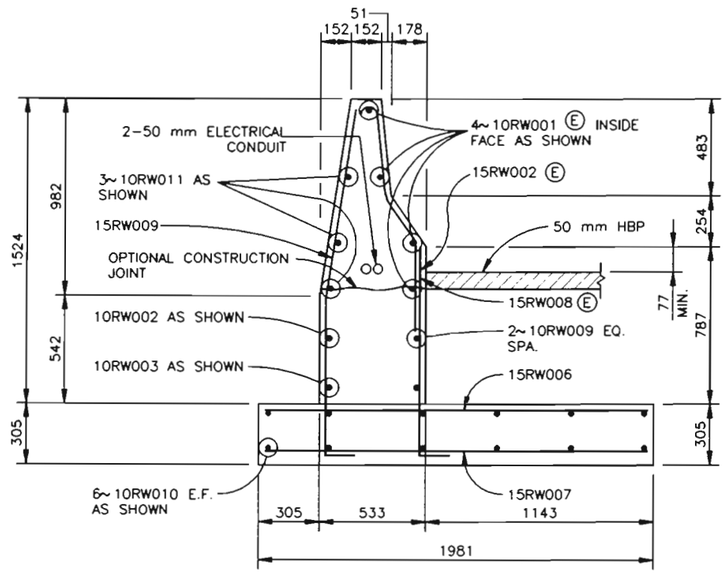

SECTION B8/B

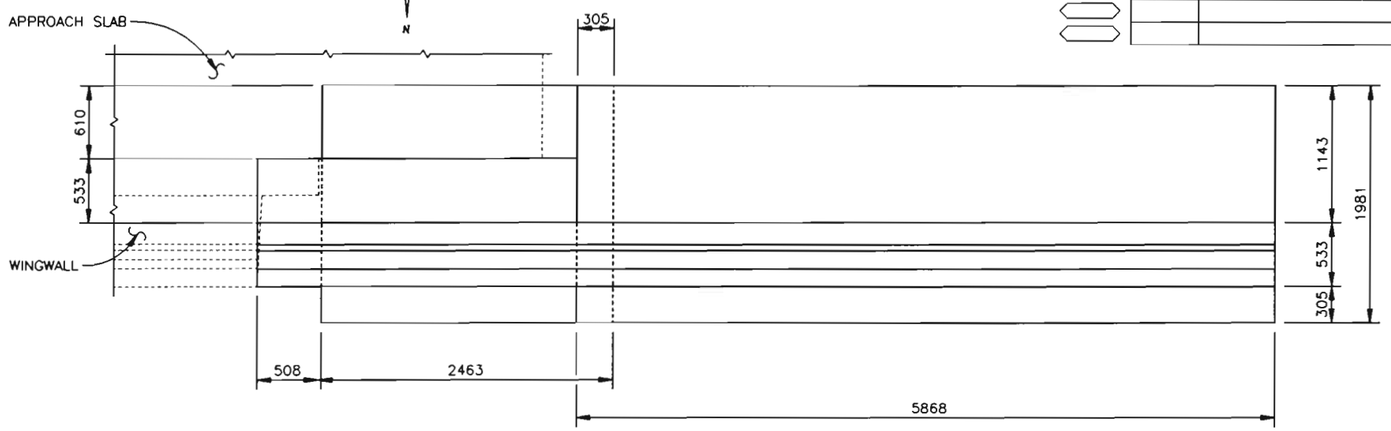

PLAN–ABUTMENT 1

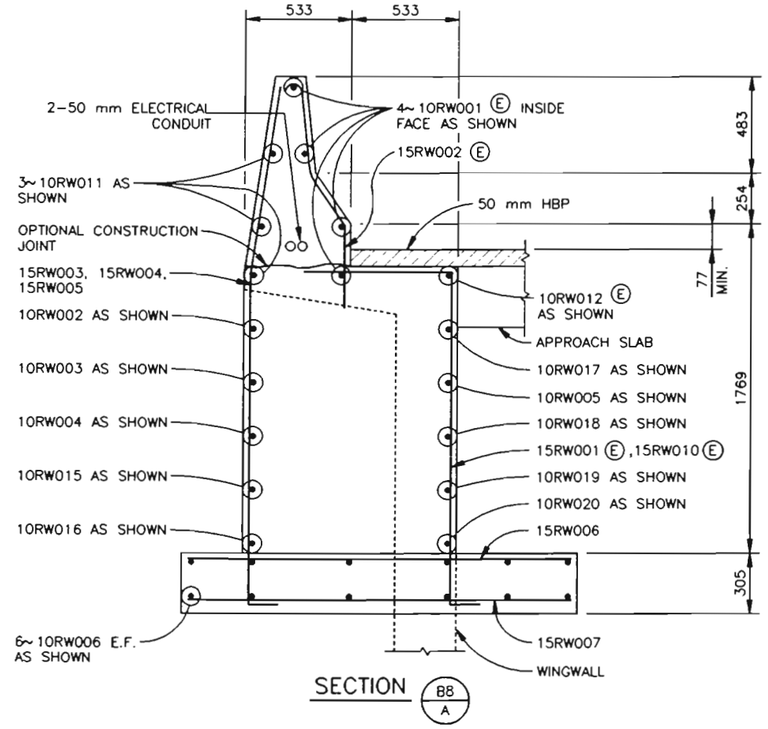

SECTION B8/A

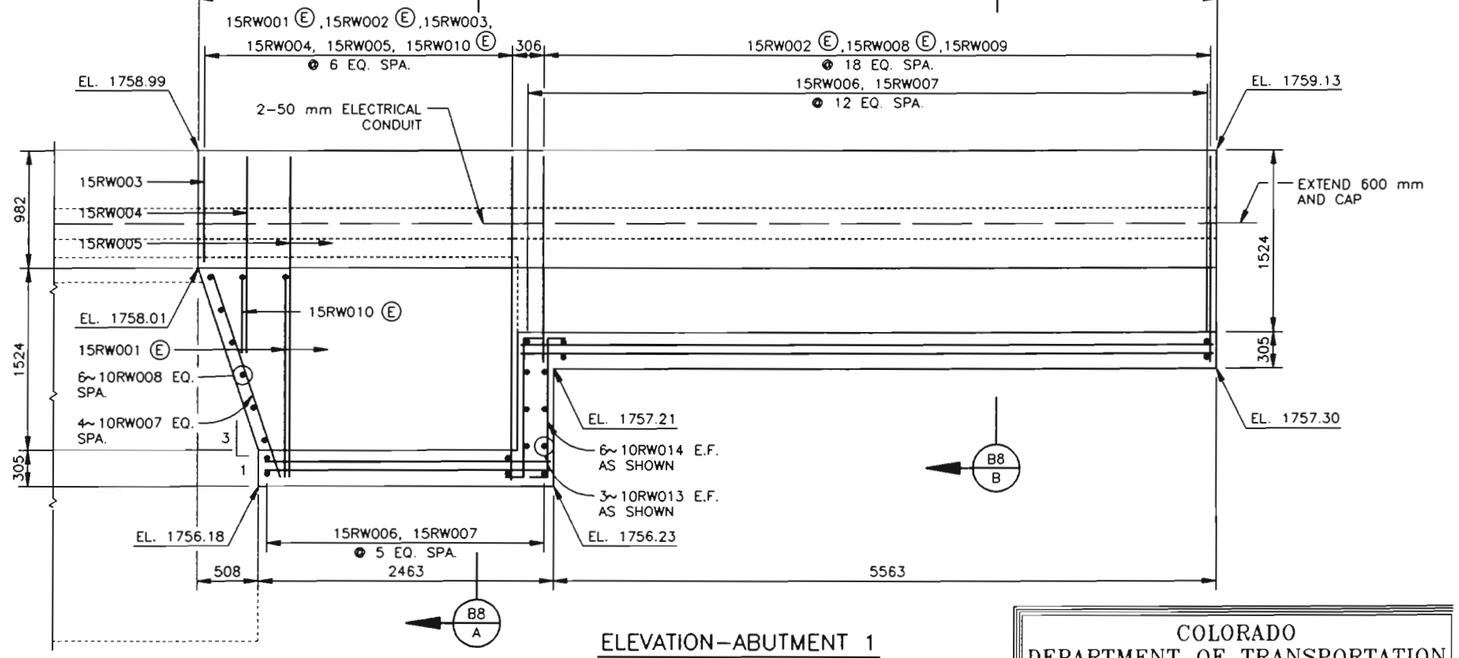

ELEVATION–ABUTMENT 1

NOTE: ALL CONCRETE IN WALL IS CLASS B CONCRETE.

FELSBURG HOLT & ULLEVIG

COLORADO DEPARTMENT OF TRANSPORTATION

WB SH470 OVER ACRES GREEN DR.
BRIDGE WIDENING
ABUTMENT 1 RETAINING WALL DETAILS

Designer E. LARSEN	Structure Numbers	F-17-HO
Detailer S. DANKENBRING		
Drawing Number B8 of 22 Drawings		

Revision Dates (Preliminary Stage Only)

AS CONSTRUCTED				
NO REVISIONS 12-3-96	REVISED		VOID	

FEDERAL RD REGION NO	DIVISION	PROJ. NO.	SHEET NO.	TOTAL SHEETS
VIII	COLORADO	CC 4701-082	51	154

REVISIONS			

DESIGN	Initial	Date
Designed by	EPL	11-95
Checked by	DOG	1-96

DETAIL	Initial	Date
Detailed by	SED	11-95
Checked by	EPL	11-95

QUANTITIES	Initial	Date
Quantities by	DOG	11-95
Checked by	EPL	12-95

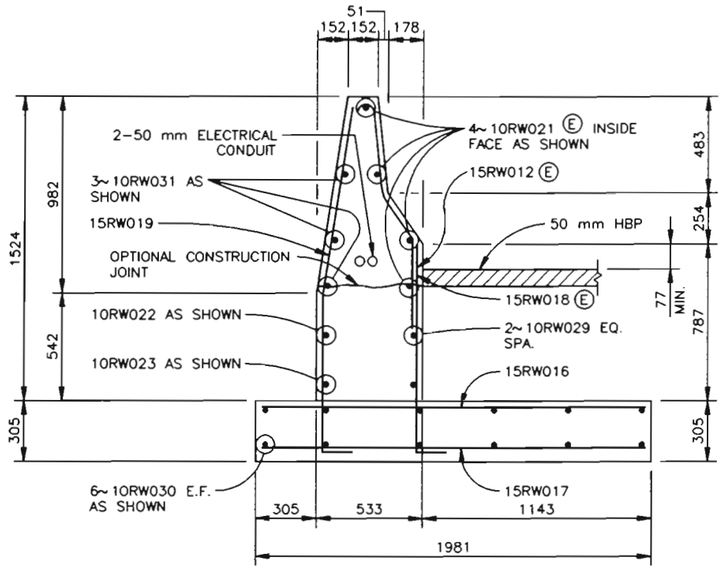

SECTION B9/B

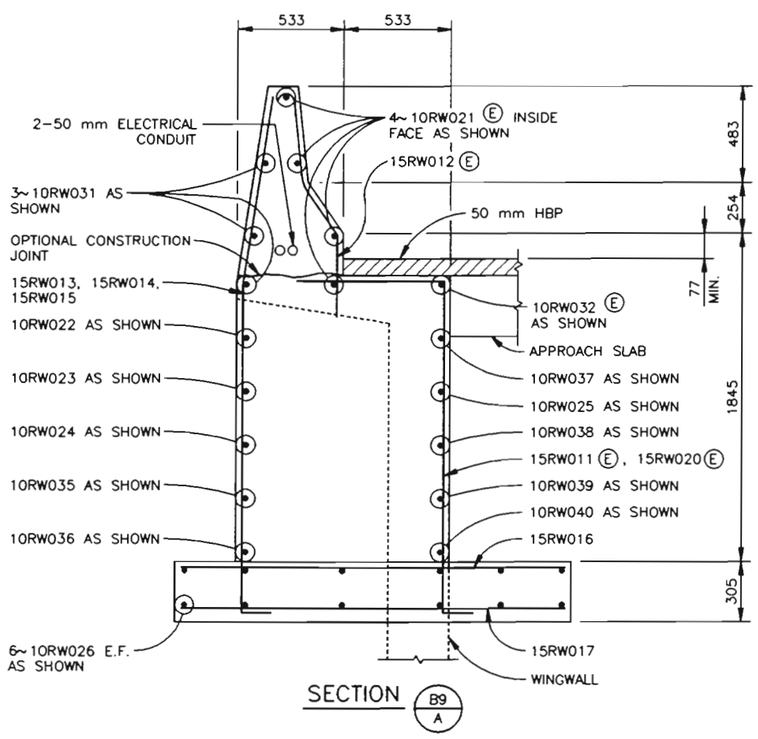

SECTION B9/A

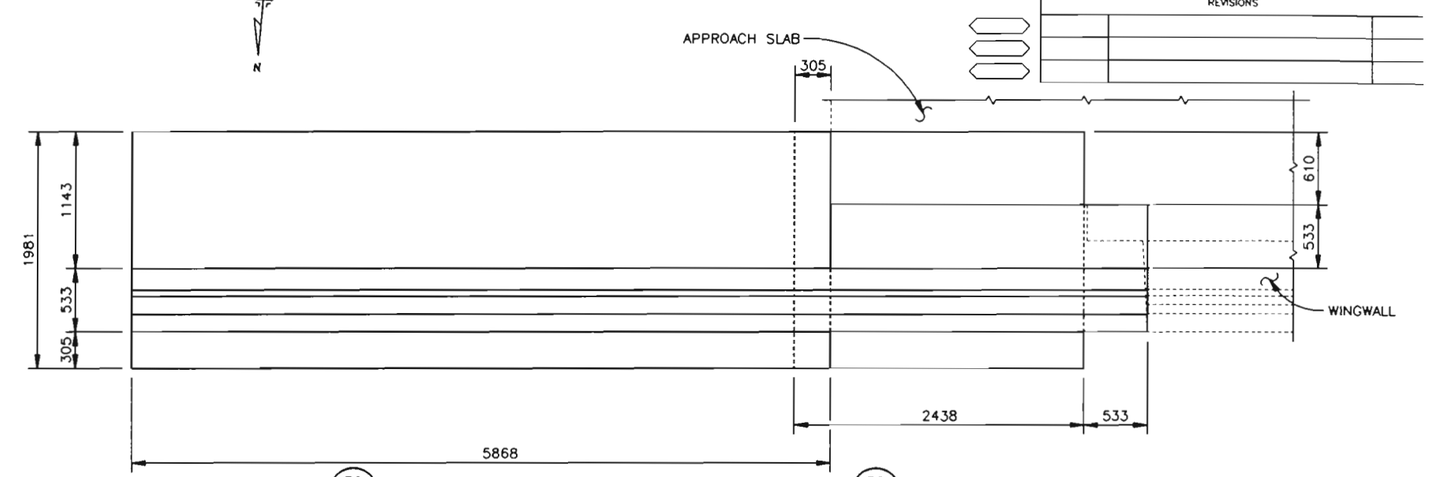

PLAN–ABUTMENT 3

B9/B B9/A

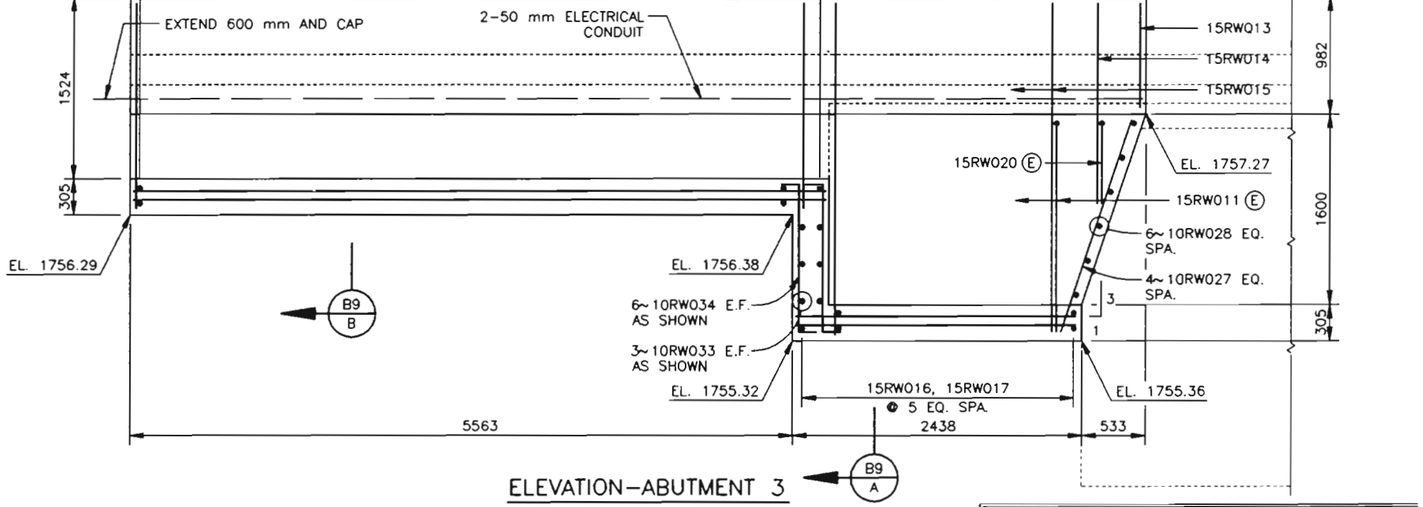

ELEVATION–ABUTMENT 3

B9/B B9/A

NOTE: ALL CONCRETE IN WALL IS CLASS B CONCRETE.

FELSBURG HOLT & ULLEVIG

COLORADO DEPARTMENT OF TRANSPORTATION

WB SH470 OVER ACRES GREEN DR.
BRIDGE WIDENING
ABUTMENT 3 RETAINING WALL DETAILS

Designer E. LARSEN	Structure Numbers	F-17-HO
Detailer S. DANKENBRING		
Drawing Number B9 of 22 Drawings		

Revision Dates (Preliminary Stage Only)

AS CONSTRUCTED				
NO REVISIONS 12-3-96	REVISED		VOID	

FEDERAL RD REGION NO.	DIVISION	PROJ. NO.	SHEET NO.	TOTAL SHEETS
VIII	COLORADO	CC 4701-082	52	154

REVISIONS			

DESIGN	Initial	Date
Designed by	DJG	11-95
Checked by	LF	1-96
Detailed by	SED	11-95
Checked by	DJG	11-95
Quantities by	DJG	11-95
Checked by	EPL	12-95

QUANTITIES

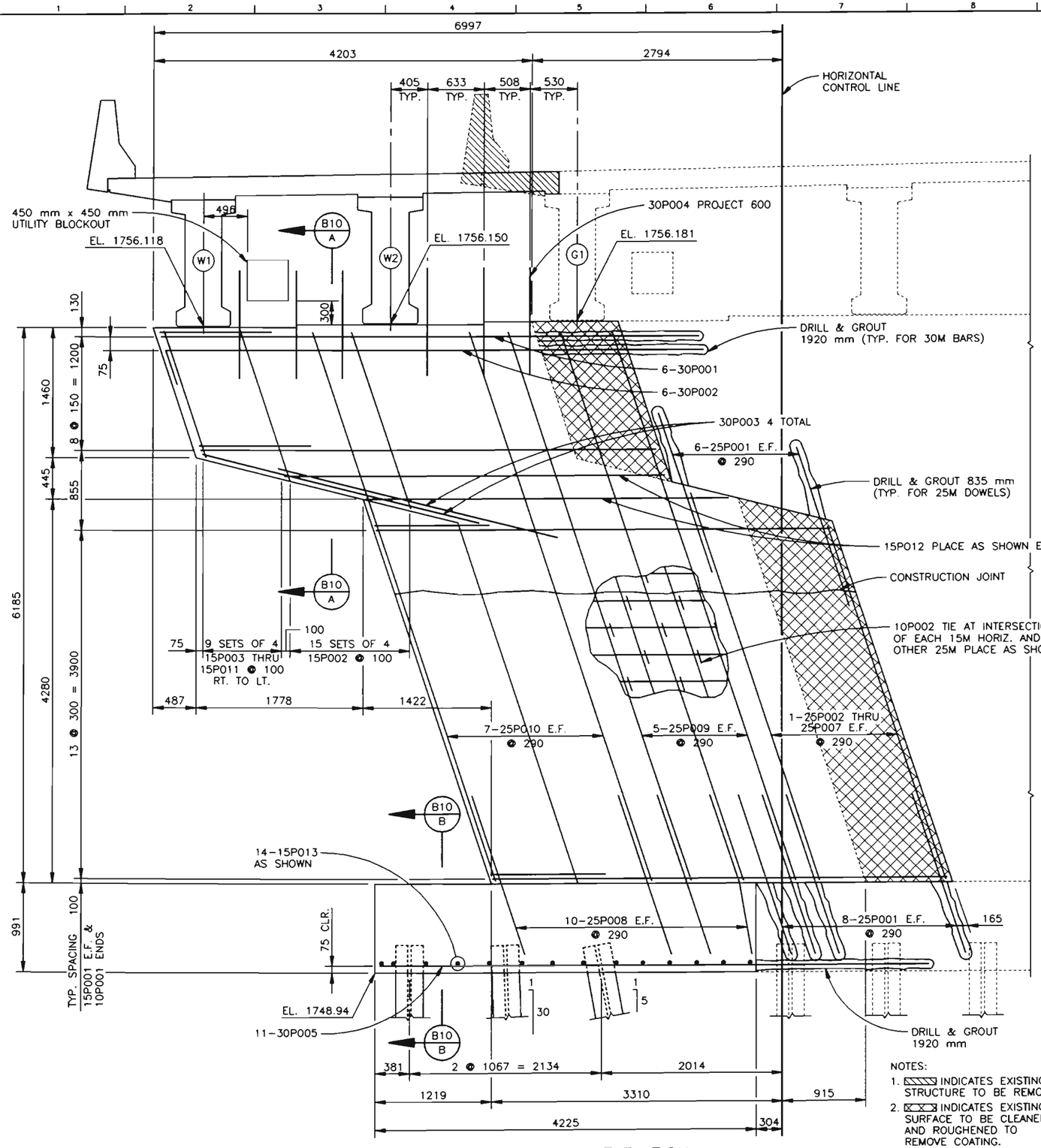

ELEVATION
ORIGINAL SCALE 1:25

NOTES:
1. ▨ INDICATES EXISTING STRUCTURE TO BE REMOVED.
2. ▩ INDICATES EXISTING SURFACE TO BE CLEANED AND ROUGHENED TO REMOVE COATING.
3. CHEMICAL ADHESIVE GROUT SHALL BE CAPABLE OF DEVELOPING THE STRENGTH OF THE BAR.

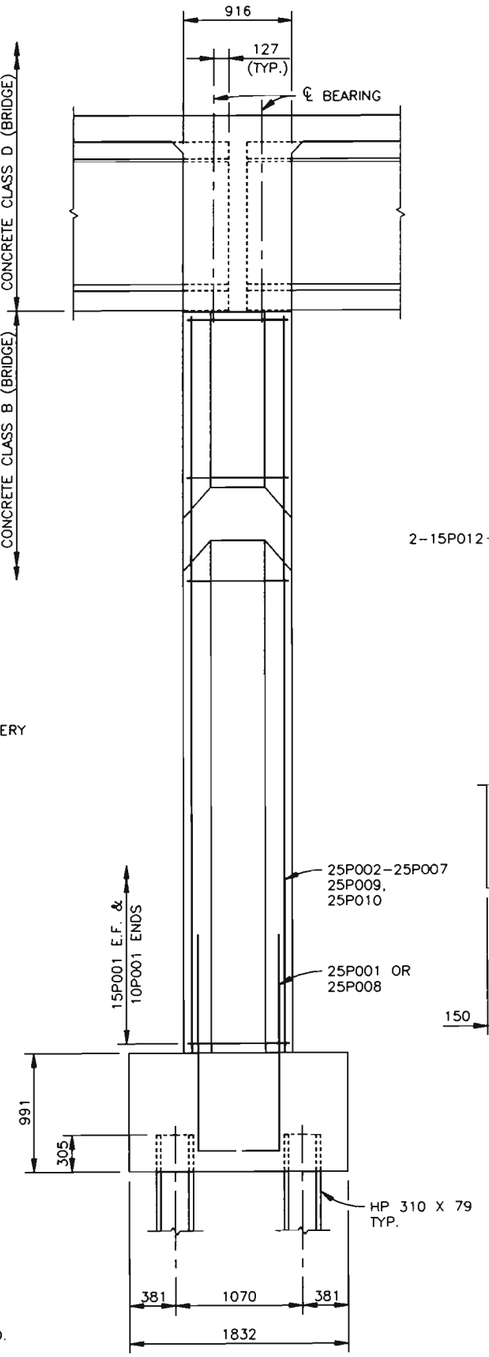

END VIEW
ORIGINAL SCALE 1:25

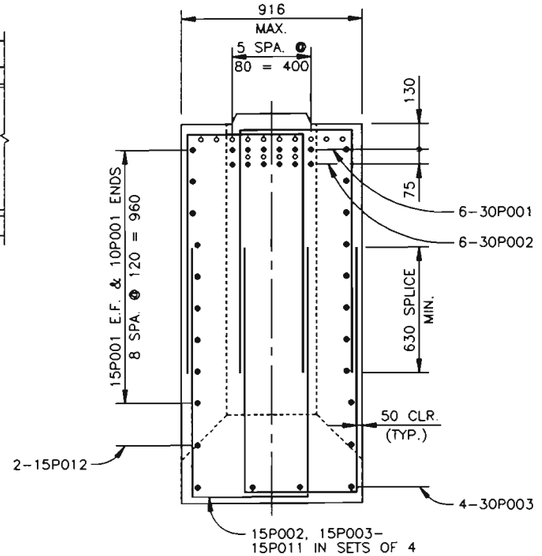

SECTION B10 A
ORIGINAL SCALE 1:15

NOTE: ∘ DENOTES POSITION OF REINFORCING IN EXISTING PIER.

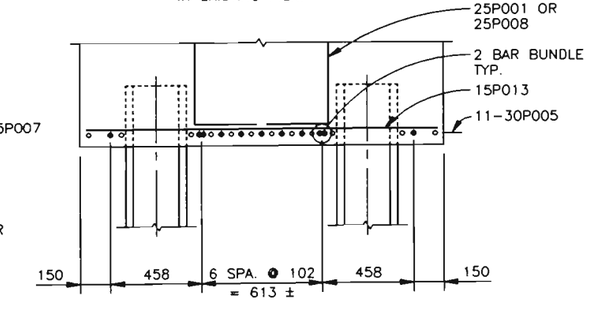

SECTION B10 B
ORIGINAL SCALE 1:15

NOTE: ∘ DENOTES POSITION OF REINFORCING IN EXISTING PIER.

COLORADO DEPARTMENT OF TRANSPORTATION

WB SH470 OVER ACRES GREEN DR.
BRIDGE WIDENING
PIER 2 ELEVATION

Designer D. GROENEMAN	Structure	F-17-HO
Detailer S. DANKENBRING	Numbers	
Drawing Number B10 of 22	Drawings	

FELSBURG HOLT & ULLEVIG

Revision Dates (Preliminary Stage Only)

AS CONSTRUCTED					
NO REVISIONS 12-3-96	REVISED		VOID		

FEDERAL RD REGION NO.	DIVISION	PROJ. NO.	SHEET NO.	TOTAL SHEETS
VIII	COLORADO	CC 4701-082	53	154

REVISIONS		

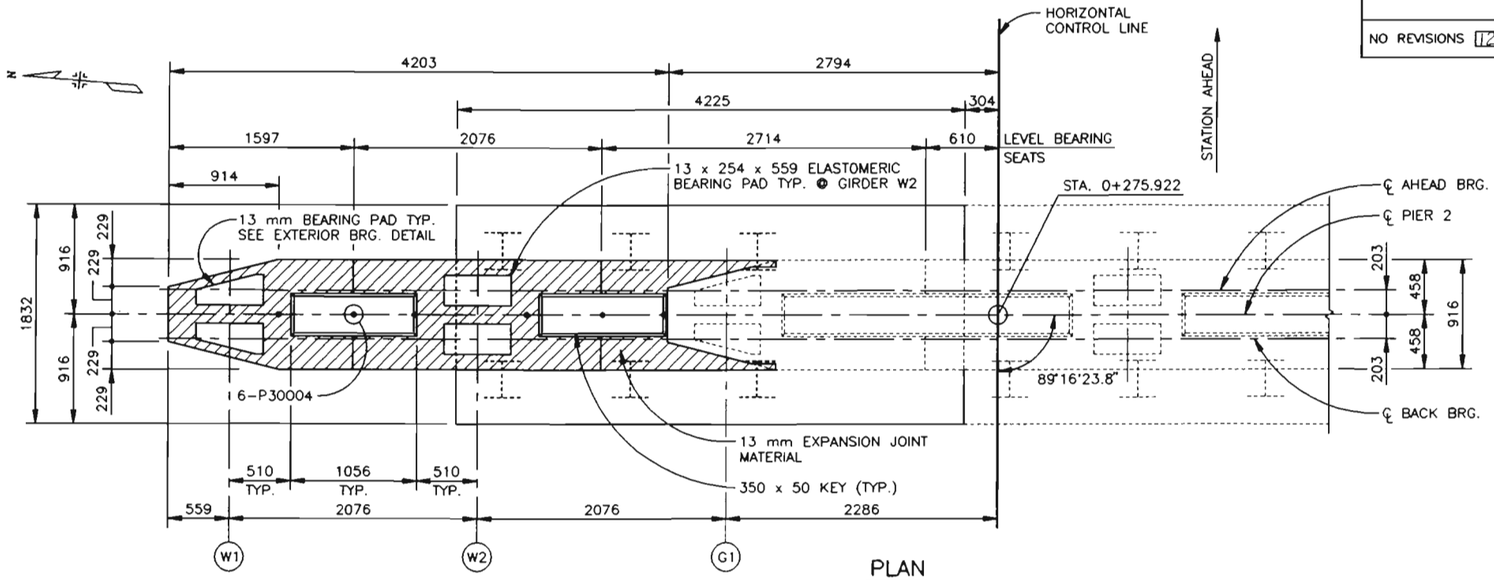

PLAN

ORIGINAL SCALE 1:25

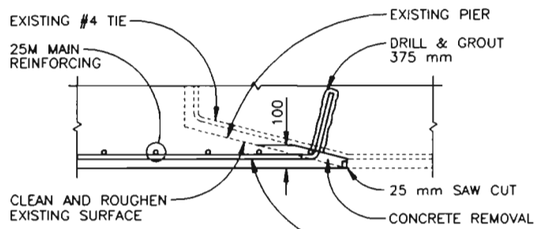

DETAIL B11 / A

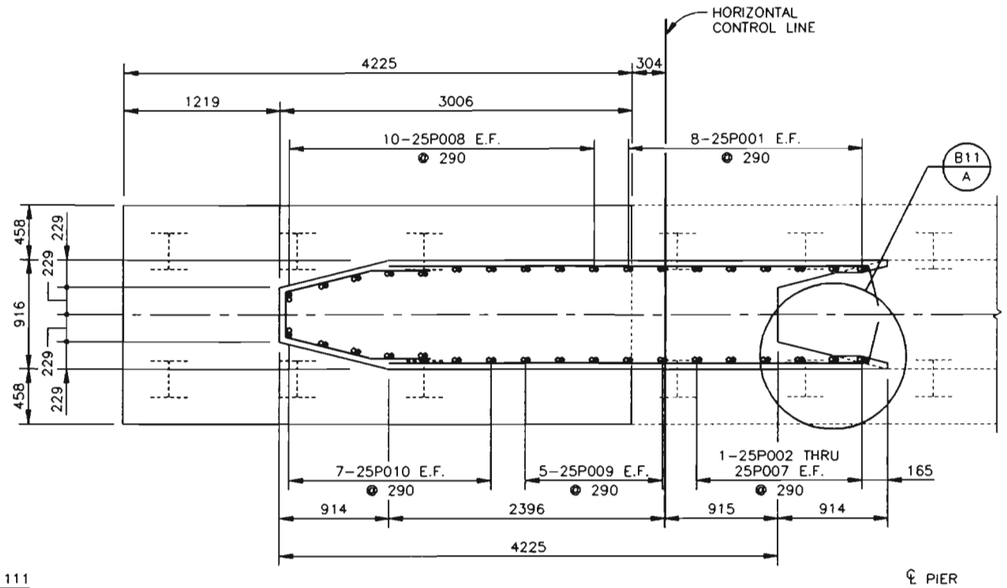

PLAN AT TOP OF FOOTING

ORIGINAL SCALE 1:25

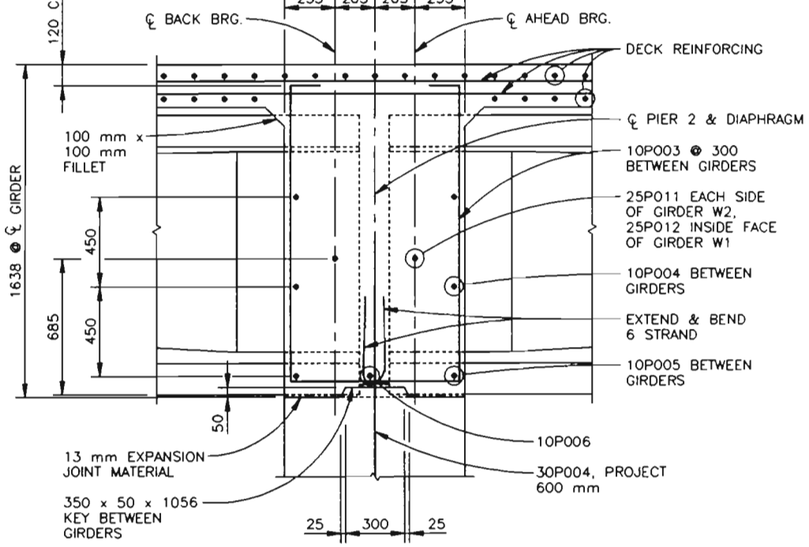

PIER DIAPHRAGM DETAIL

ORIGINAL SCALE 1:15

NOTE: SLAB AND DIAPHRAGM TO BE POURED MONOLITHICALLY.

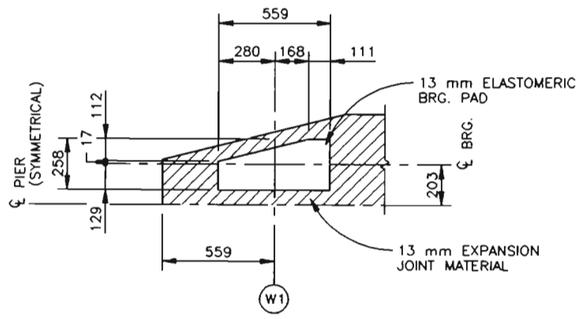

EXTERIOR BEARING DETAIL

ORIGINAL SCALE 1:15

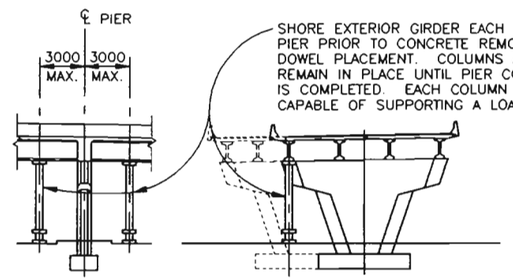

BRACING DETAILS

ORIGINAL SCALE 1:200

FELSBURG HOLT & ULLEVIG

COLORADO DEPARTMENT OF TRANSPORTATION

WB SH470 OVER ACRES GREEN DR. BRIDGE WIDENING PIER 2 PLAN

Designer D. GROENEMAN	Structure	F-17-HO
Detailer S. DANKENBRING	Numbers	
Drawing Number B11 of 22 Drawings		

QUANTITIES	Initial	Date
	DOG	11-95
	EPL	12-95
Quantities by		
Checked by		

DETAILING	Initial	Date
	SED	11-95
	DOG	11-95
Detailed by		
Checked by		

DESIGN	Initial	Date
	DOG	11-95
	LF	1-96
Designed by		
Checked by		

Revision Dates	(Preliminary Stage Only)

AS CONSTRUCTED				
NO REVISIONS	REVISED 12-3-96	VOID		

FEDERAL RD REGION NO.	DIVISION	PROJ. NO	SHEET NO.	TOTAL SHEETS
VIII	COLORADO	CC 4701-082	54	154

REVISIONS

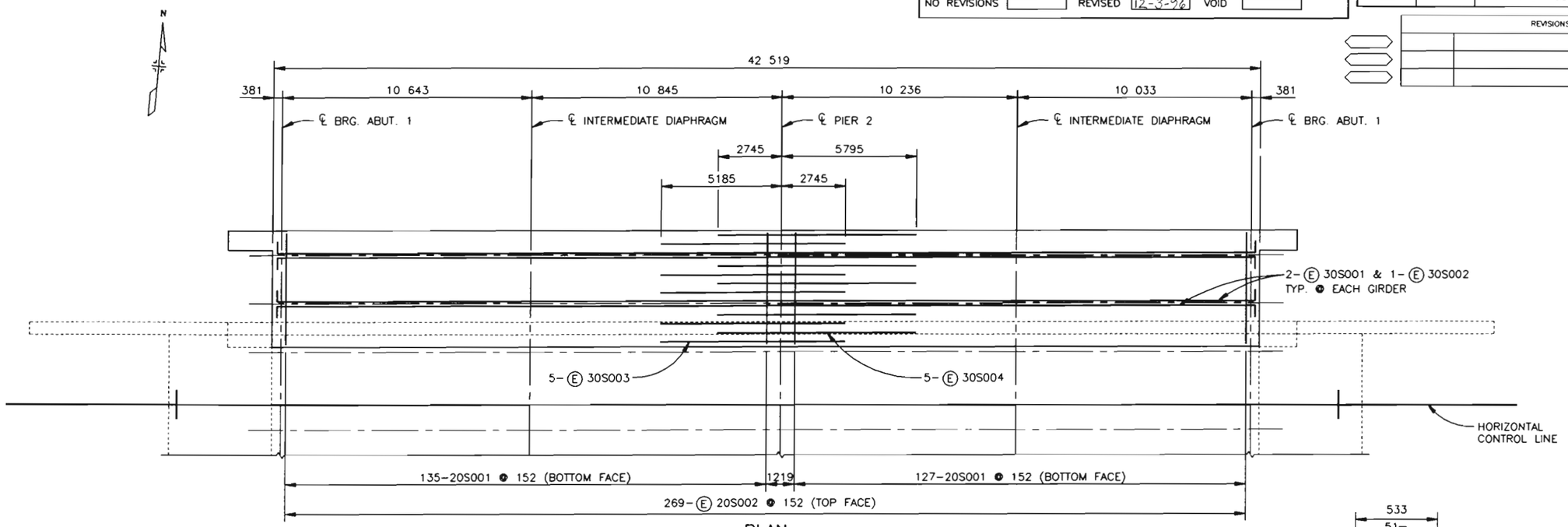

PLAN

ORIGINAL SCALE 1:100

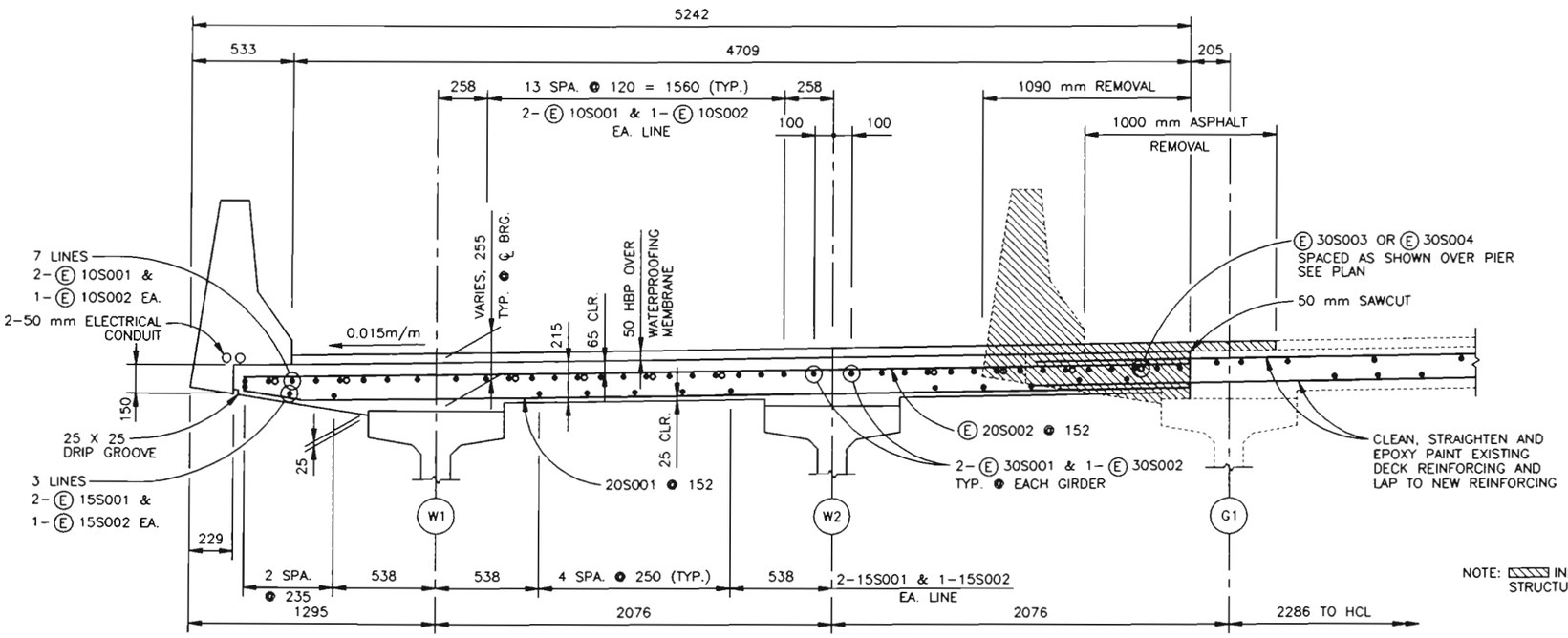

TYPICAL SECTION

ORIGINAL SCALE 1:15

NOTE: ▨ INDICATES EXISTING STRUCTURE TO BE REMOVED.

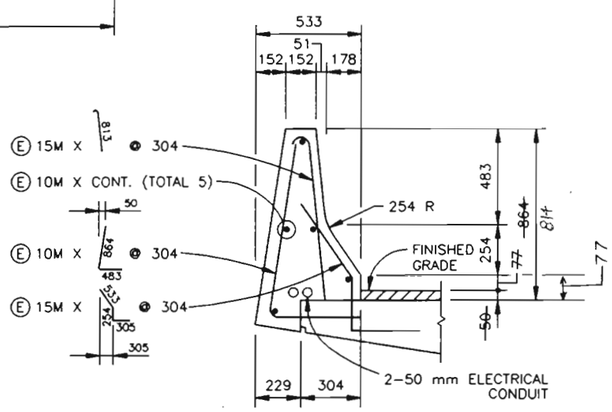

SECTION THRU BRIDGE RAIL

ORIGINAL SCALE 1:15

NOTES:
1) ALL DIMENSIONS ARE IN MILLIMETERS (mm) UNLESS OTHERWISE NOTED.

FELSBURG HOLT & ULLEVIG

COLORADO
DEPARTMENT OF TRANSPORTATION

WB SH470 OVER ACRES GREEN DR.
BRIDGE WIDENING
DECK PLAN AND SECTION

Designer D. GROENEMAN	Structure	F-17-HO
Detailer S. DANKENBRING	Numbers	
Drawing Number B12	of 22	Drawings

Revision Dates (Preliminary Stage Only)

DESIGN			DETAIL			QUANTITIES		
Designed by	Initial DDG	Date 11-95	Detailed by	Initial SED	Date 11-95	Quantities by	Initial DDG	Date 11-95
Checked by	LF	1-96	Checked by	DDG	11-95	Checked by	EPL	12-95

AS CONSTRUCTED				
NO REVISIONS 12-3-96	REVISED		VOID	

FEDERAL RD REGION NO.	DIVISION	PROJ. NO.	SHEET NO.	TOTAL SHEETS
VIII	COLORADO	CC 4701-082	55	154

REVISIONS			

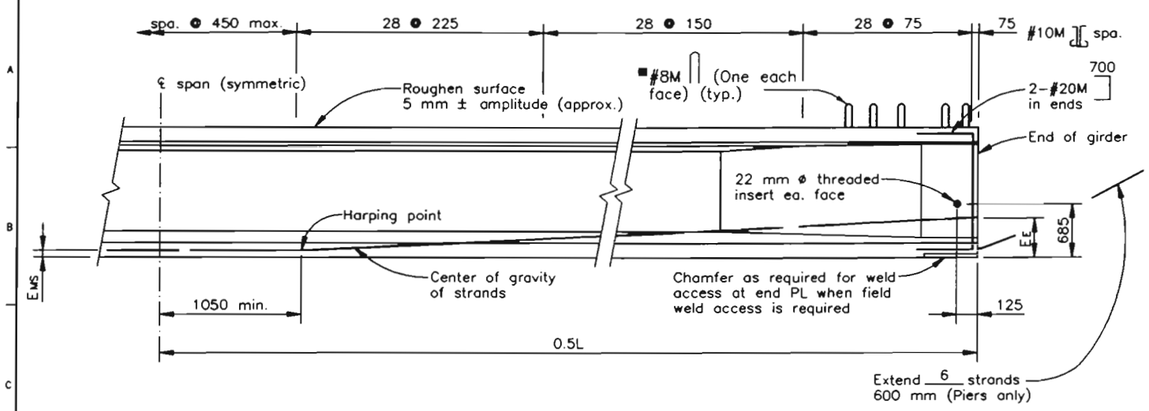

GIRDER ELEVATION

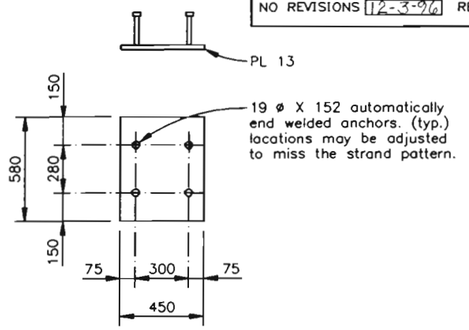

END PLATE DETAIL

Galvanize after fabrication.

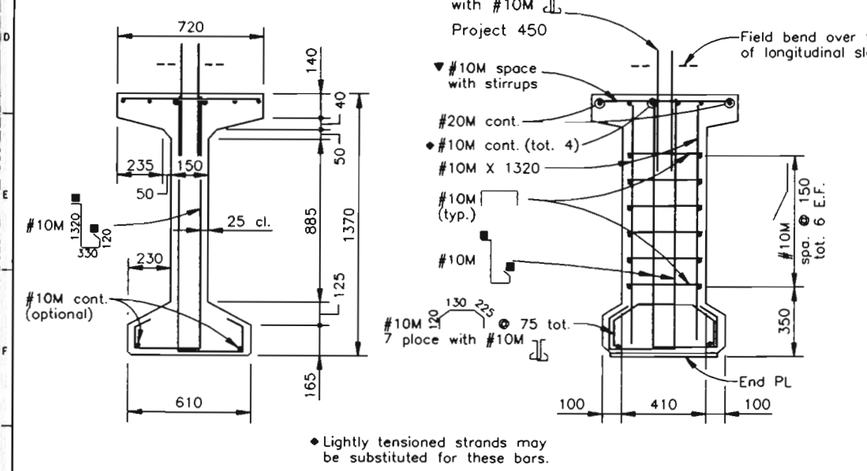

◆Lightly tensioned strands may be substituted for these bars.

THROUGH MID SPAN THROUGH END PLATE

TYPICAL GIRDER SECTIONS

■ These legs required only on the end 20 stirrups of girder (each face).

▼Space with #10M stirrups for spacings of 450. Space at 450 mm for spacings less than 450 mm.

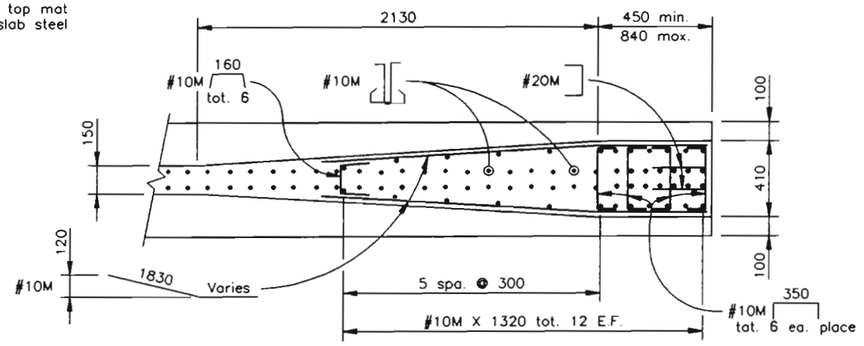

SECTION THRU END BLOCK

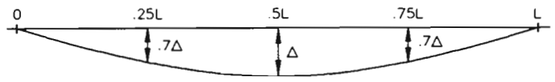

DEAD LOAD DEFLECTION DIAGRAM

NOTES

All work necessary to fabricate and install the integral parts of the girder (including the intermediate diaphragms, 22 mm threaded rods, and elastomeric bearing pads) as shown in the plans shall be included in the bid price for Item No. 618, Prestressed Concrete Unit.

When approved by the Engineer a minimum of tack welding will be permitted on ASTM A706M, uncoated reinforcing steel. Reinforcing projecting from the top of the girder and reinforcing within 2000 mm of an expansion device in the bridge deck shall be epoxy coated. Damaged coating on girder reinforcing need not be repaired. The minimum cover for reinforcing steel is 25 mm.

At girder ends not embedded in concrete diaphrogms, cut strands off 25 mm below the surface of the concrete ond finish with an approved epoxy grout. At girder ends embedded in concrete diaphragms, cut strands flush, except as shown. Do not make cosmetic repairs (damage less than 40 mm deep) to the parts of the girders embedded in concrete.

Use low relaxation strands meeting the requirements of 13 mm ASTM A416 grade 270. The minimum clear distance between groups ar individual strands shall be 32 mm. The minimum cover for prestressing steel is 38 mm.

A minimum of two harping points shall be used per girder.

A_{s*} = minimum area of the prestressing steel.
f'_s = ultimate strength of the prestressing steel.
F_i = jacking force per girder including all losses.
F_f = final force per girder after all losses.
f'_{ci} = required concrete strength at release of prestress force
f'_c = required concrete strength at 28 doys of age.
Δ = deflection at centerline of span due to cast-in-place slab, diaphragms, asphalt, curbs, rails, and walks.

Concrete shall be Class S. Entrained air is not required for girder concrete. Use 13 mm chamfer on all corners, except as noted.

Predicted camber is the camber for the girder alone at 90 days. The Contractor shall limit the camber growth to a value not to exceed the predicted camber plus 25 mm prior to the deck pour by weighting, scheduling fabrication, post tensioning, ar other means and must report to the Engineer values of camber which exceed the predicted camber plus 25 mm. Remedial measures, as approved by the Engineer, shall be taken if the predicted comber plus 25 mm is exceeded. The approved remedial measures shall be free of any adverse impact. The costs associated with all remedial measures shall be borne by the Contractor.

Product dimensional tolerances specified in MNL-116, Section 6.4 shall opply as specification tolerance.

The Contractor is responsible for determining necessary bracing requirements, and for providing adequate bracing for the specific wind and weather conditions to be encountered for each specific project.

No girders shall be erected and left unbraced. The intermediate diaphragms shall be connected to the adjacent girders simultaneously with the erection of the girders.

Use and installation of the intermediate diaphragms shall not relieve the Contractor of full responsibility to construct the work in a manner which provides all necessary rigidity, supports all laads imposed, and provides in the finished structure the lines and grades indicoted on the plans.

GIRDER SCHEDULE										
Span No.	Girder No.	L (mm)	A_{s*} (mm^2)	E_{MS} (mm)	E_E (mm)	F_i (kN)	F_f (kN)	Concrete Strength f'_{ci} (MPa)	Concrete Strength f'_c (MPa)	Δ (mm)	Predicted Camber (mm)
1	W1, W2	21 535	1974	65	410	2756	2202	30	35	-14	25
2	W1, W2	20 316	1777	62	422	2480	2010	30	35	-11	20

QUANTITIES	Initial	Date	
	DOG	11-95	
	EPL	12-95	
Quantities by			
Checked by			

	Initial	Date
	SED	11-95
	DOG	11-95
Detailed by		
Checked by		

	Initial	Date
	DOG	11-95
	LF	1-96
Designed by		
Checked by		

FELSBURG HOLT & ULLEVIG

COLORADO DEPARTMENT OF TRANSPORTATION

WB SH470 OVER ACRES GREEN DR.
BRIDGE WIDENING
COLORADO G1370 GIRDER

Designer D. GROENEMAN	Structure Numbers	F-17-HO
Detailer S. DANKENBRING		
Drawing Number B13 of 22 Drawings		

Revision Dates (Preliminary Stage Only)

AS CONSTRUCTED

NO REVISIONS 12-3-96 REVISED ☐ VOID ☐

FEDERAL RD REGION NO.	DIVISION	PROJ. NO.	SHEET NO.	TOTAL SHEETS
VIII	COLORADO	CC 4701-082	56	154

REVISIONS		

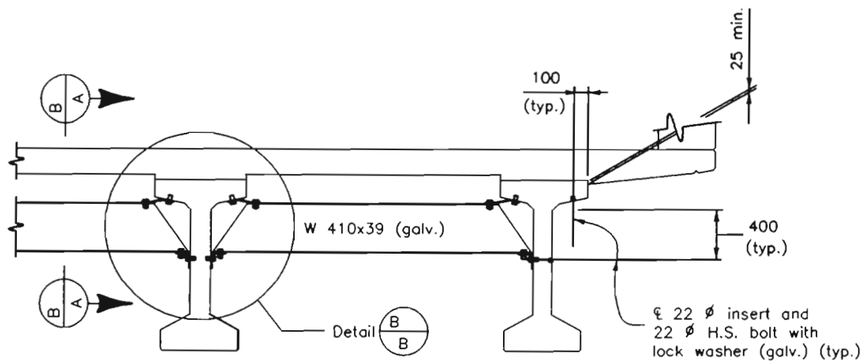

INTERMEDIATE DIAPHRAGM DETAILS

For location of diaphragms, see Construction Layout.

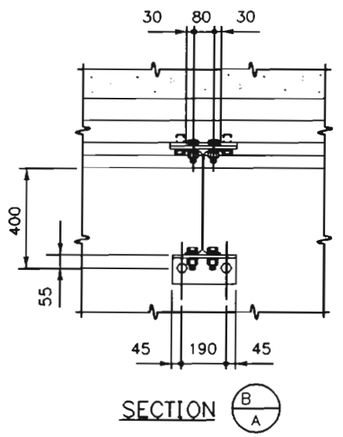

SECTION B/A

NOTES

All diaphragm materials, including bolts, nuts, and washers shall be galvanized. Galvanizing may be before fabrication. Zinc or aluminum metalizing is an alternate to galvanizing.

Two copies of shop drawings of the diaphragm details shall be submitted to the Engineer for information only.

The bend dimensions shown for the connection PL may need to be adjusted for superelevations over .04 m/m.

The diaphragms may be placed on a skew such that they are between 80° and 100° to the girders.

DESIGN	Initial	Date
Designed by	DOG	2-96
Checked by	EPL	2-96
Detailed by		
Checked by		
QUANTITIES		
Quantities by	DOG	2-96
Checked by	EPL	2-96

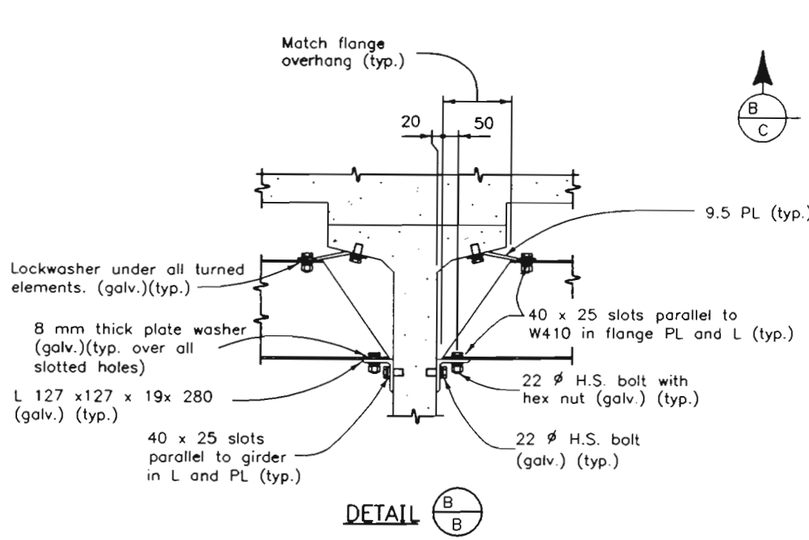

DETAIL B/B

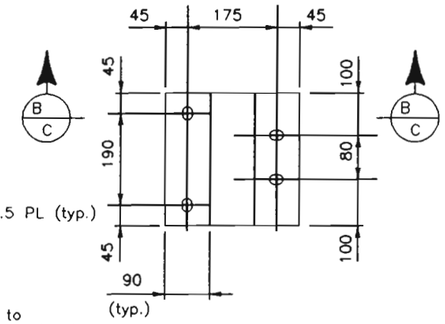

SECTION B/C

For 1070 and 1830

SECTION B/C

For 1370, 1730, and 2130

FELSBURG HOLT & ULLEVIG

COLORADO DEPARTMENT OF TRANSPORTATION

WB SH470 OVER ACRES GREEN DR.
BRIDGE WIDENING
DIAPHRAGM DETAILS

Designer D. GROENEMAN	Structure Numbers	F-17-HO
Detailer S. SHIBAO		
Drawing Number B14 of 22 Drawings		

Revision Dates (Preliminary Stage Only)

AS CONSTRUCTED			
NO REVISIONS 12-3-96	REVISED		VOID

FEDERAL RD REGION NO.	DIVISION	PROJ. NO.	SHEET NO.	TOTAL SHEETS
VIII	COLORADO	CC 4701-082	57	154

REVISIONS

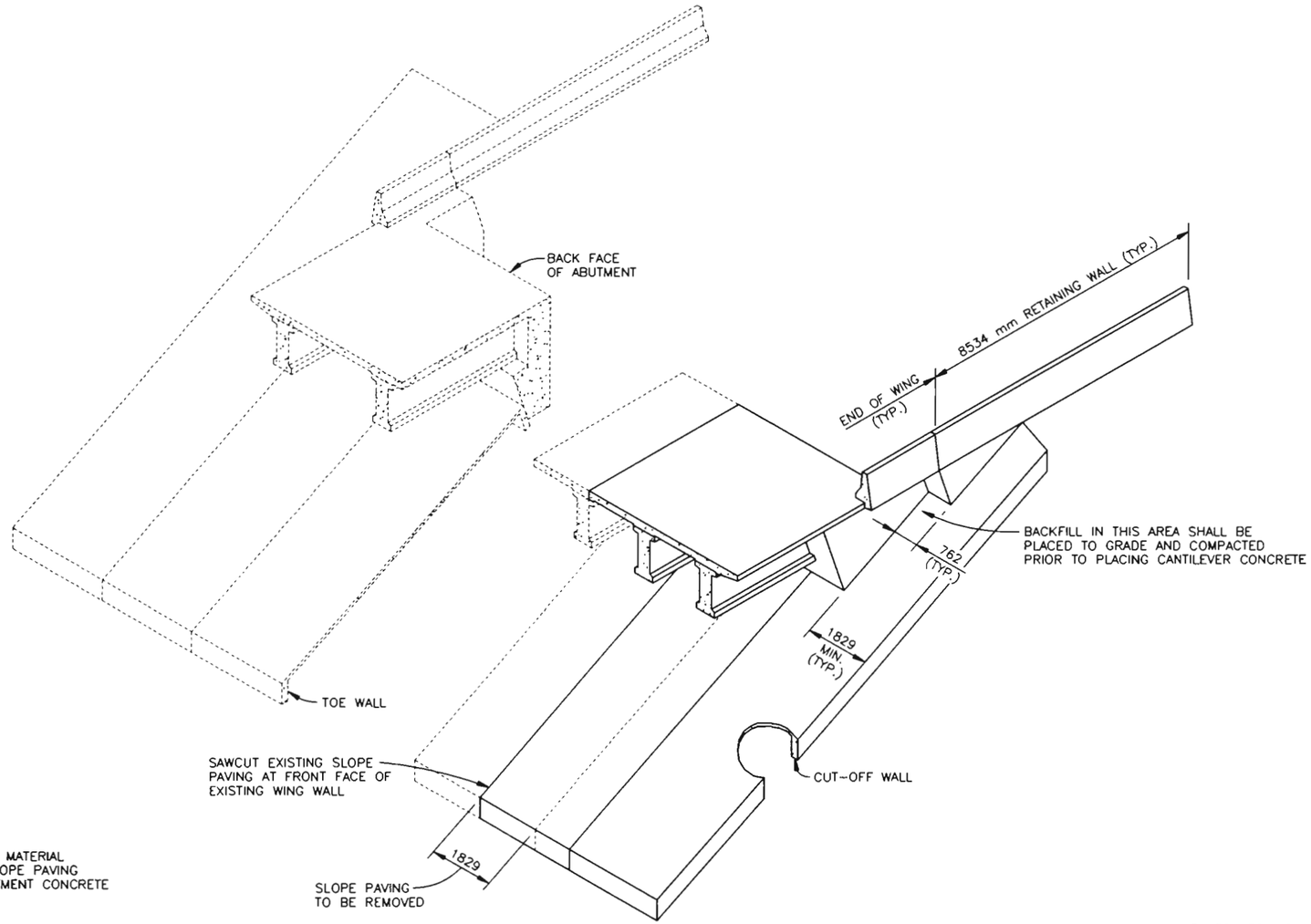

VIEW OF SLOPE PAVING

NOTES:

SLOPE PAVING SHALL BE POURED IN 3048 SECTIONS AS SHOWN WITH A TOOLED CONSTRUCTION JOINT AT EACH SECTION.

WIRE FABRIC SHALL BE 51 FROM END OF THE JOINT AND SHALL LAP 203 AT SPLICES.

WHERE SLOPE PAVING BUTTS AGAINST STRUCTURAL CONCRETE, SEPARATE WITH 25 EXPANSION JOINT MATERIAL.

EXPANSION JOINT MATERIAL AND WELDED WIRE FABRIC SHALL NOT BE PAID FOR SEPARATELY, BUT SHALL BE INCLUDED IN ITEM 507 CONCRETE SLOPE AND DITCH PAVING (REINFORCED).

THE SURFACE OF FINISHED SLOPE PAVING SHALL RECEIVE A FLOAT FINISH OF UNIFORM APPEARANCE FREE OF FLOAT MARKS AND SMOOTHLY TROWELED CONSTRUCTION JOINTS.

STRUCTURE EXCAVATION FOR SLOPE AND DITCH PAVING SHALL BE LIMITED TO THE ACTUAL VOLUME OCCUPIED BY THE SLOPE PAVING CONCRETE.

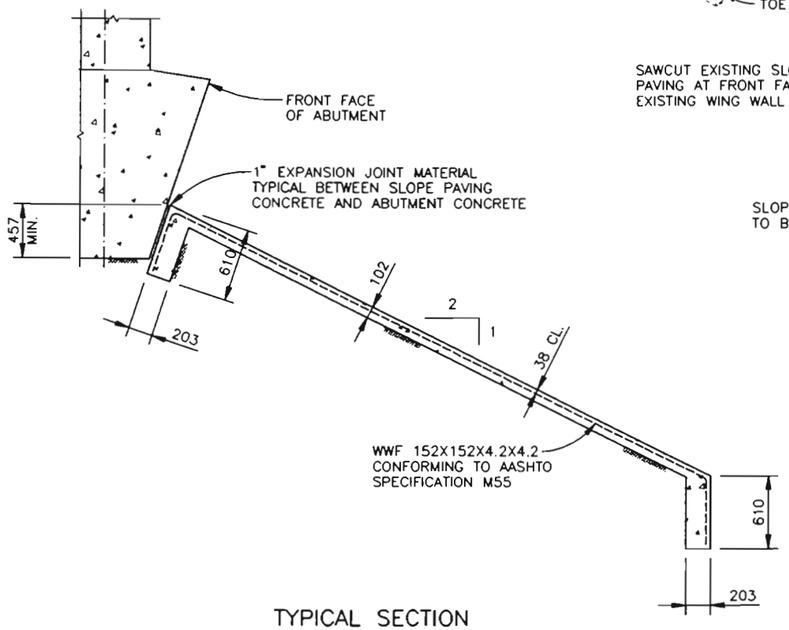

TYPICAL SECTION THRU SLOPE PAVING

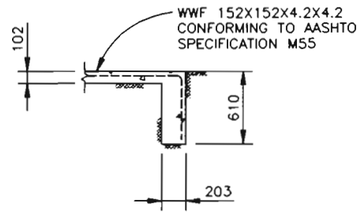

SECTION THRU CUT-OFF WALL

DESIGN				QUANTITIES			
Designed by	Initial DDG	Date 11-95	Detailed by	Initial SED	Date 11-95	Quantities by	Initial DDG	Date 11-95
Checked by	EPL	1-96	Checked by	DDG	11-95	Checked by	EPL	12-95

FELSBURG HOLT & ULLEVIG

COLORADO DEPARTMENT OF TRANSPORTATION

WB SH470 OVER ACRES GREEN DR.
BRIDGE WIDENING
SLOPE PAVING

Designer D. GROENEMAN	Structure Numbers	F-17-HO
Detailer S. DANKENBRING		
Drawing Number 15 of 22 Drawings		

Revision Dates (Prelimimary Stage Only)

AS CONSTRUCTED

NO REVISIONS 12-3-96 REVISED ☐ VOID ☐

FEDERAL RD REGION NO.	DIVISION	PROJ NO.	SHEET NO.	TOTAL SHEETS
VIII	COLORADO	CC 4701-082	58	154

REVISIONS		

DESIGN	Initial	Date
Designed by	DDG	11-95
Checked by	EPL	1-96

DETAIL	Initial	Date
Detailed by	SED	11-95
Checked by	DDG	11-95

QUANTITIES	Initial	Date
Quantities by	DDG	11-95
Checked by	EPL	12-95

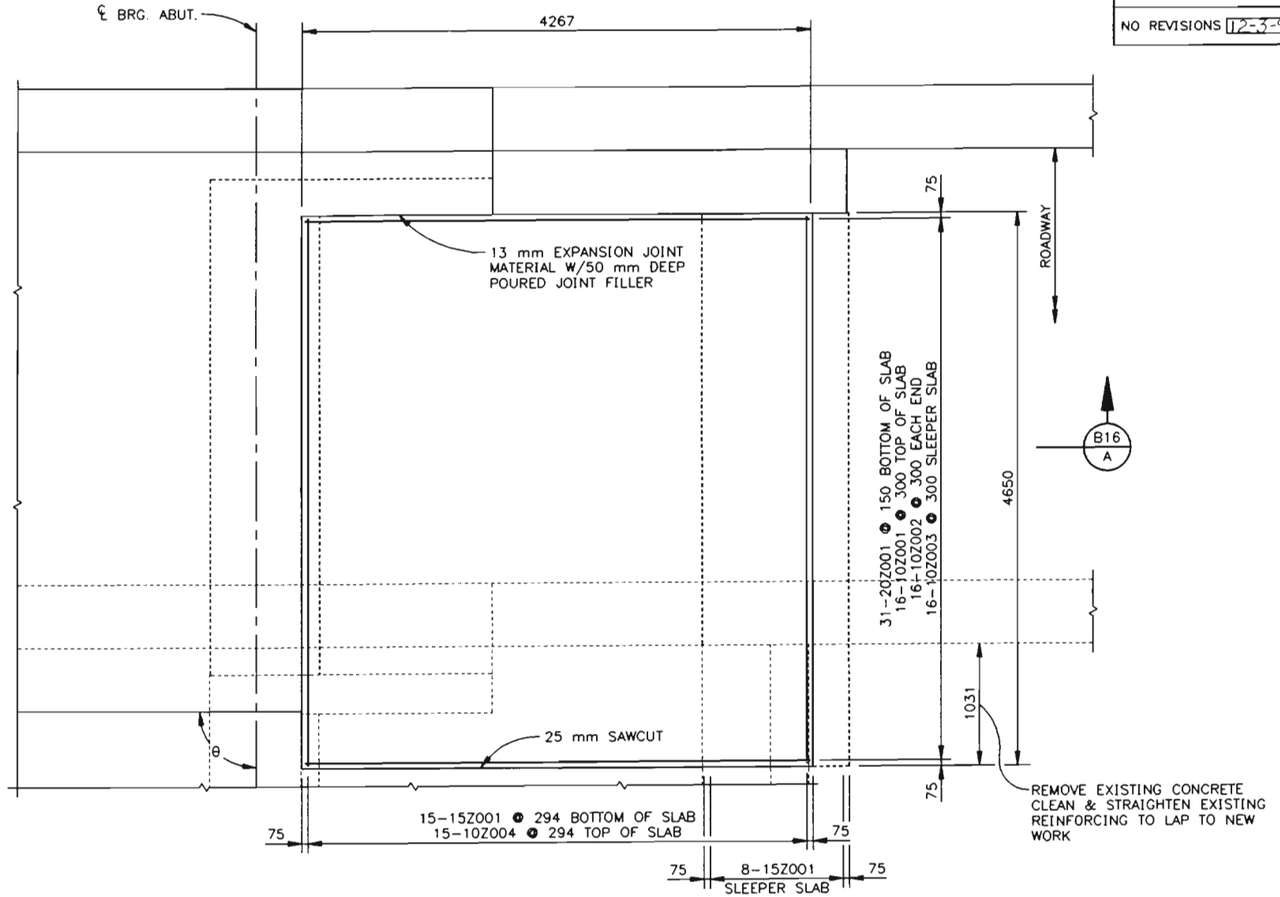

PLAN

ORIGINAL SCALE 1:25

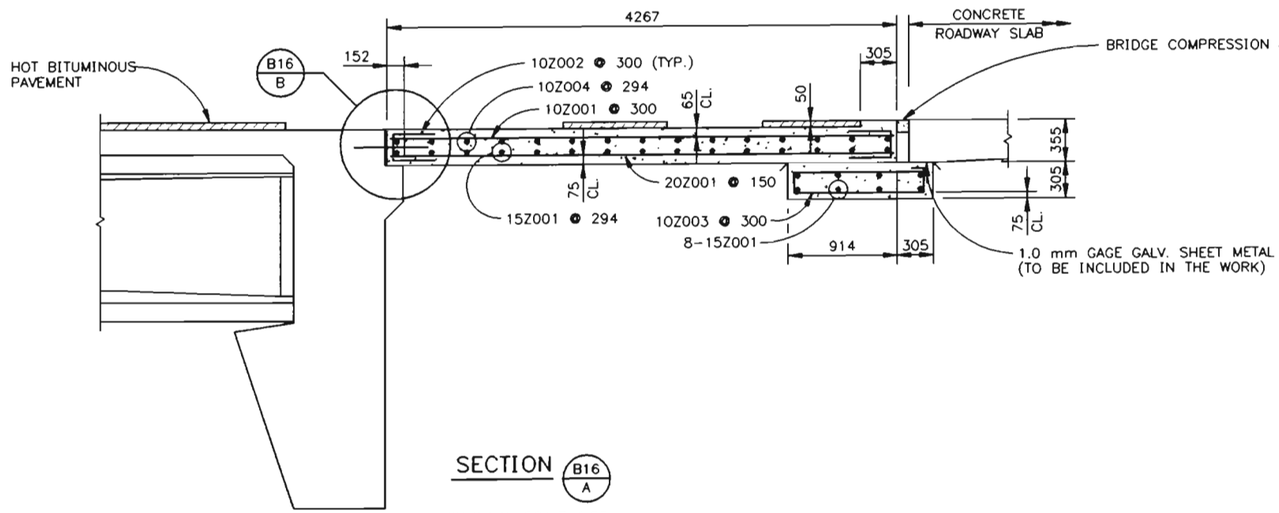

SECTION B16/A

ORIGINAL SCALE 1:25
WITH ASPHALT ROADWAY

NOTES:
1. CONCRETE CLASS D (BRIDGE) SHALL BE USED FOR APPROACH SLABS.
2. 13 mm EXPANSION JOINT MATERIAL SHALL MEET A.A.S.H.T.O. SPEC. M213.
3. BRIDGE COMPRESSION JOINT SEALER SHALL BE 127 mm x 105 mm DEEP UNCOMPRESSED, CLOSED CELL, FOAMED, CROSS-LINKED ETHYLENE VINYL ACETATE/LOW-DENSITY POLYETHYLENE COPOLYMER

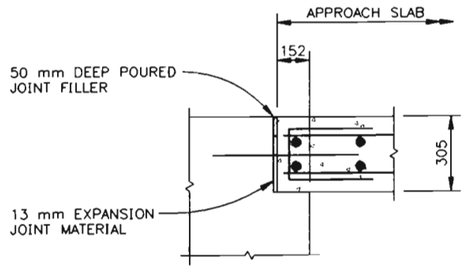

DETAIL B16/B

NTS

FELSBURG HOLT & ULLEVIG

COLORADO DEPARTMENT OF TRANSPORTATION

WB SH470 OVER ACRES GREEN DR.
BRIDGE WIDENING
APPROACH SLAB

Designer D. GROENEMAN	Structure Numbers	F-17-HO
Detailer S. DANKENBRING		
Drawing Number B16 of 22 Drawings		

Revision Dates (Preliminary Stage Only)

AS CONSTRUCTED				
NO REVISIONS	REVISED 12-3-96	VOID		

FEDERAL RD REGION NO	DIVISION	PROJ NO.	SHEET NO.	TOTAL SHEETS
VIII	COLORADO	CC 4701-082	59	154

REVISIONS

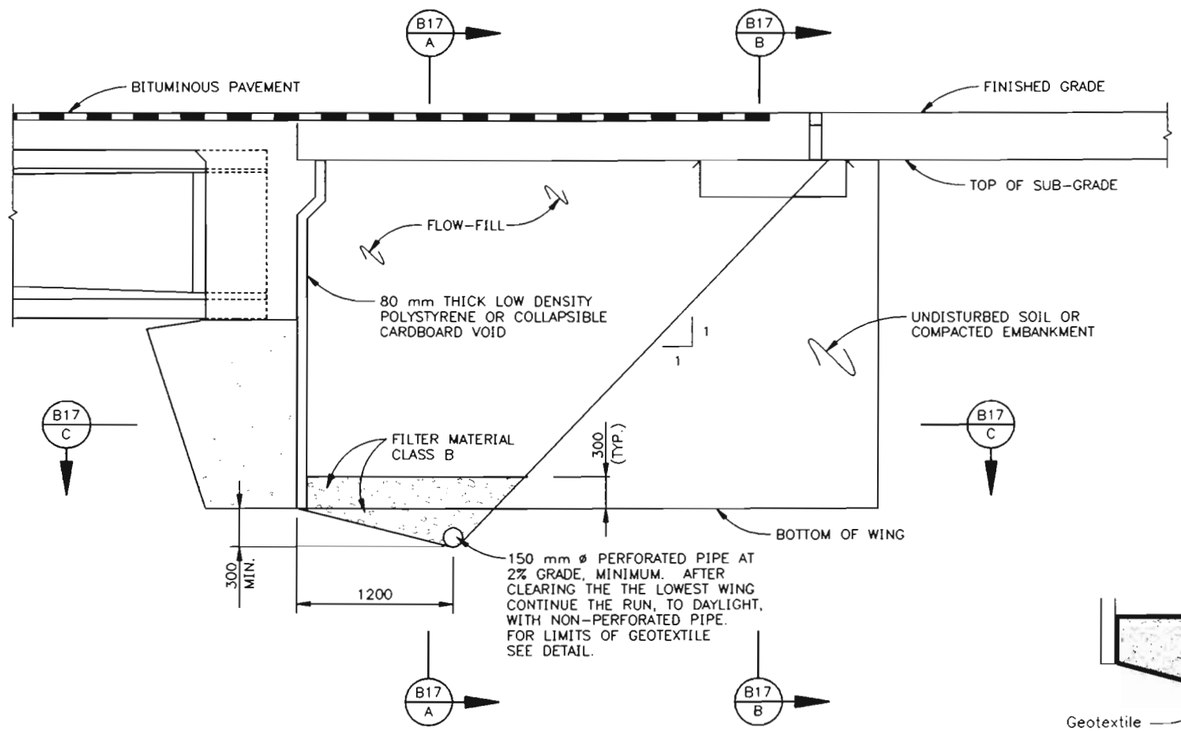

SECTION PERPENDICULAR TO ABUTMENT

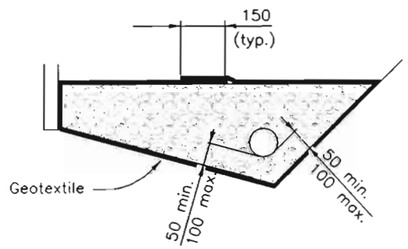

GEOTEXTILE DETAIL

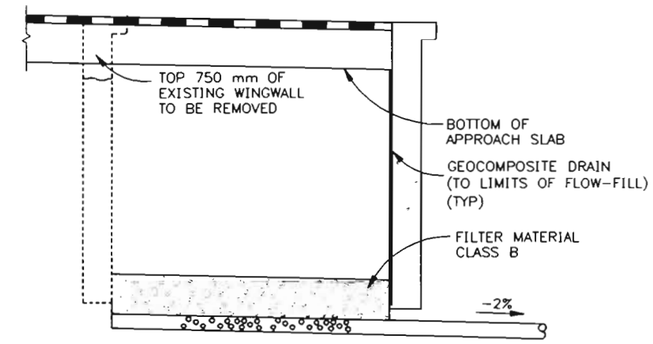

SECTION B17/A

ABUTMENT 1 SHOWN, ABUTMENT 3 SIMILAR

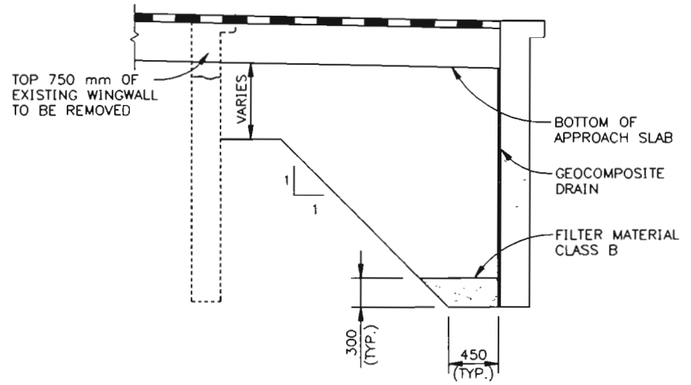

SECTION B17/B

ABUTMENT 1 SHOWN, ABUTMENT 3 SIMILAR

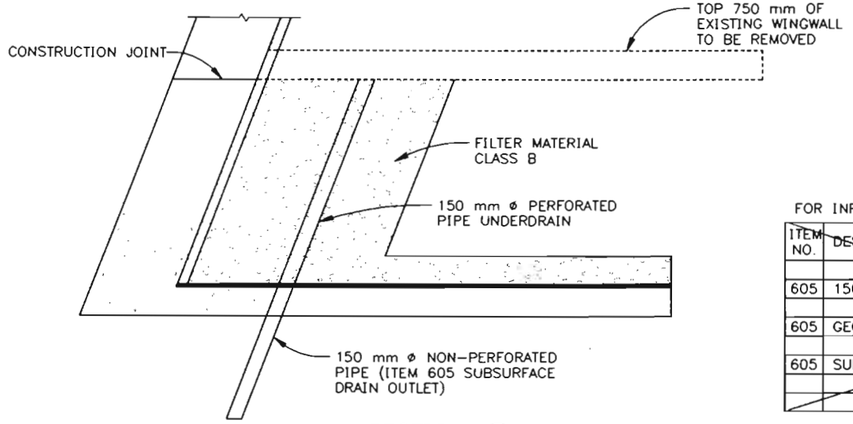

SECTION B17/C

ABUTMENT 1 SHOWN, ABUTMENT 3 SIMILAR

The maximum layer thickness for Structure Backfill (Flow-fill) shall be 1 m. Additional layers shall not be placed until the Structure Backfill (Flow-fill) has lost sufficient moisture to be walked on without indenting more than 50 mm.

FOR INFORMATION ONLY

ITEM NO.	DESCRIPTION	UNITS	LOCATION ABUT. 1	LOCATION ABUT. 3
605	150 mm PERFORATED PIPE UNDERDRAIN	m	4.1	4.1
605	GEOCOMPOSITE DRAIN	m2	7.2	5.5
605	SUBSURFACE DRAIN OUTLET	m	4.0	4.0

POLYSTYRENE OR CARDBOARD VOID, GEOCOMPOSITE DRAIN, 150 mm PERFORATED PIPE UNDERDRAIN, AND SUBSURFACE DRAIN OUTLET (150 mm NONPERFORATED PIPE) WILL NOT BE MEASURED OR PAID FOR SEPARATELY BUT SHALL BE INCLUDED IN THE WORK.

150 PERFORATED PIPE UNDERDRAIN INCLUDES ALL FILTER MATERIAL AND GEOTEXTILE. QUANTITY SHOWN IS MEASURED ALONG THE PERFORATED PIPE FROM INSIDE FACE TO INSIDE FACE OF WINGWALLS.

INSTALLATION OF PERFORATED PIPE UNDERDRAIN, SUBSURFACE DRAIN OUTLET, AND GEOCOMPOSITE DRAIN WILL CONFORM TO THE CONSTRUCTION REQUIREMENT OF SECTION 605.03, 605.06 AND 605.04, RESPECTIVELY.

FELSBURG HOLT & ULLEVIG

COLORADO DEPARTMENT OF TRANSPORTATION

WB SH470 OVER ACRES GREEN DR.

BRIDGE WIDENING
STRUCTURE BACKFILL
(FLOW-FILL)

Designer D. GROENEMAN	Structure Numbers	F-17-HO
Detailer S. DANKENBRING		
Drawing Number B17 of 22 Drawings		

DESIGN	Initial	Date	DETAIL	Initial	Date	QUANTITIES	Initial	Date
Designed by	DDG	11-95	Detailed by	SED	11-95	Quantities by	DDG	11-95
Checked by	EPL	1-96	Checked by	DDG	11-95	Checked by	EPL	12-95

Revision Dates (Preliminary Stage Only)

AS CONSTRUCTED			
NO REVISIONS 12-3-96	REVISED	VOID	

FEDERAL RD REGION NO.	DIVISION	PROJ. NO	SHEET NO.	TOTAL SHEETS
VIII	COLORADO	CC 4701-082	60	154

REVISIONS			

DESIGN	Initial	Date
Designed by	DOC	2-96
Detailed by	DOC	2-96
Checked by	EPL	2-96
Quantities by	DOC	2-96
Checked by	EPL	2-96

QUANTITIES	Initial	Date
Quantities by	DOC	11-95
Checked by	EPL	12-95

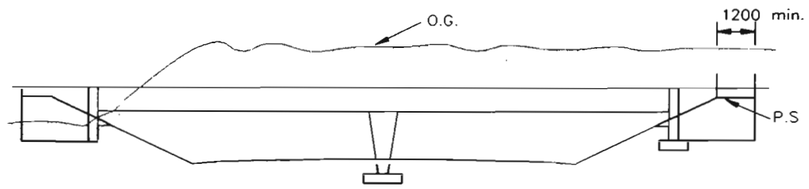

ELEVATION

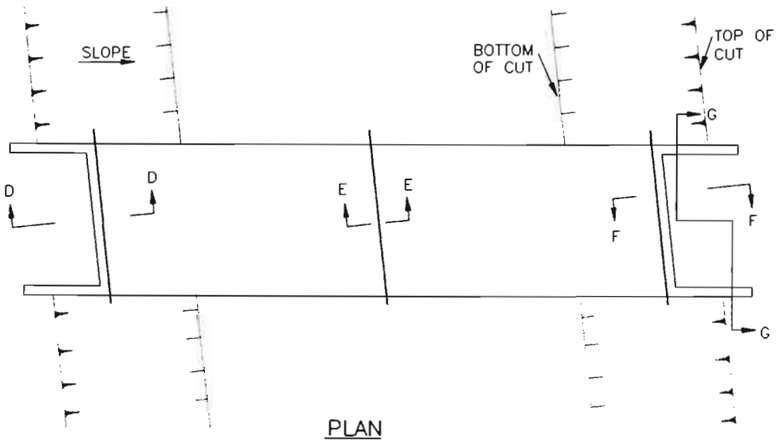

PLAN

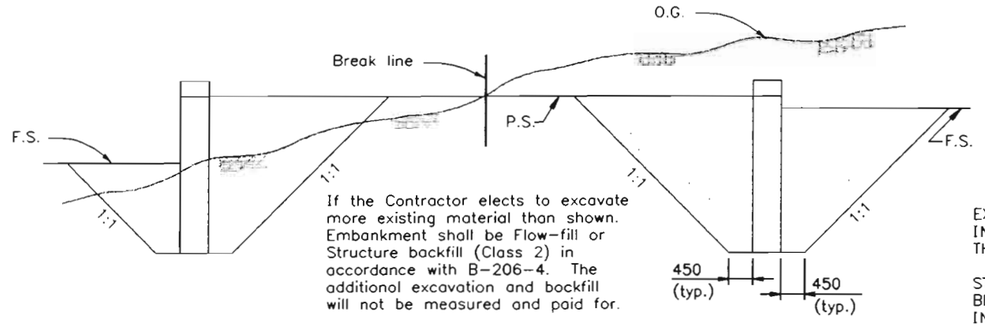

NEAR B.F. OF ABUT. NEAR END OF WINGWALL

▼SECTION G-G (EXCAVATION)

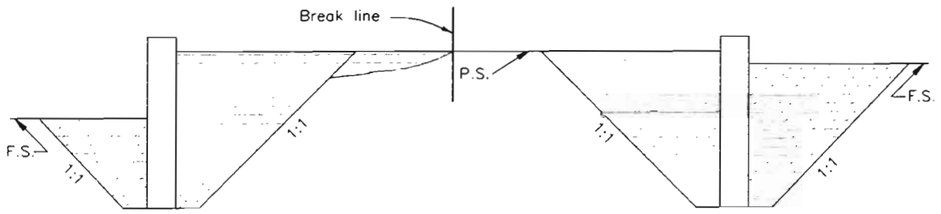

NEAR B.F. OF ABUT. NEAR END OF WINGWALL

▼SECTION G-G (BACKFILL)

GENERAL NOTES

EXCAVATION & BACKFILL PATTERNS DIFFERENT FROM THOSE INDICATED ON THIS SHEET WILL BE SHOWN ELSEWHERE ON THE PLANS.

STRUCTURE FOOTINGS WHICH ARE LOCATED IN ROCK SHALL BE POURED OUT TO UNDISTURBED ROCK, WITHOUT FORMING, IN CONFORMANCE WITH 601.09.

STRUCTURE EXCAVATION FOR SLOPE PAVING NOT SHOWN.

▼ For purposes of quantity calculations this template applies out to end of wingwall.

LEGEND

- ROADWAY EXCAVATION
- STRUCTURE EXCAVATION
- FLOW-FILL (Place in 1 m, max., lifts)
- STRUCTURE BACKFILL (CLASS 2)
- FILTER MATERIAL

ABBREVIATIONS

O.G.	ORIGINAL GROUND
P.S.	PLANNED SUBGRADE
F.S.	PLANNED FINISHED SURFACE

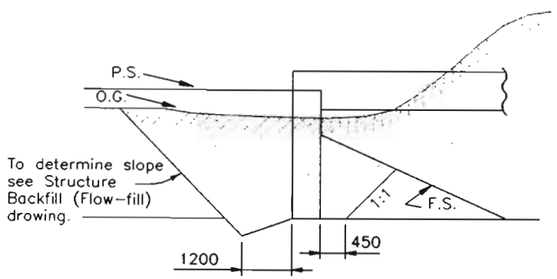

SECTION D-D (EXCAVATION)

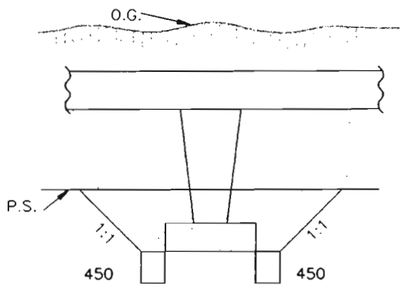

SECTION E-E (EXCAVATION)

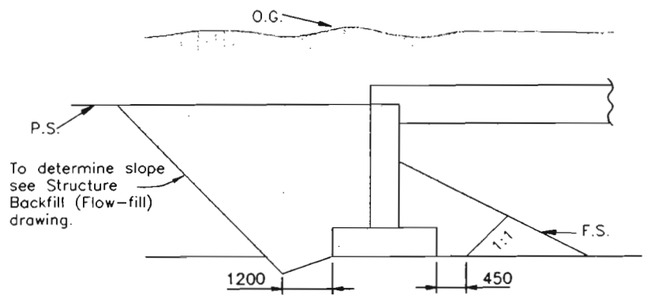

SECTION F-F (EXCAVATION)

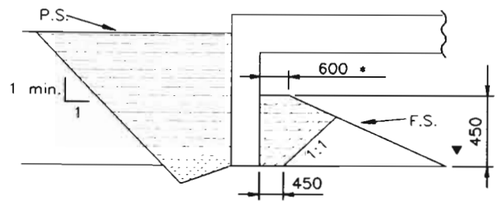

SECTION D-D (BACKFILL)

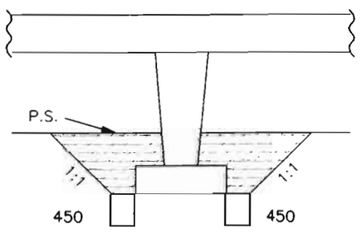

SECTION E-E (BACKFILL)

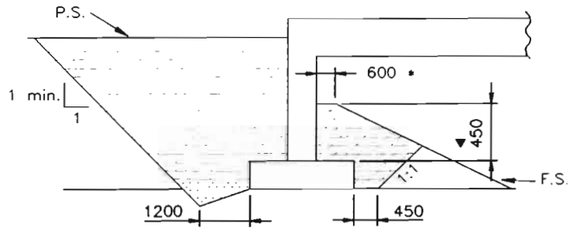

SECTION F-F (BACKFILL)

* = Minimum berm dimension.
▼ = Minimum embedment, of abut., in Structure Backfill.

FELSBURG HOLT & ULLEVIG

COLORADO DEPARTMENT OF TRANSPORTATION

WB SH470 OVER ACRES GREEN DR. BRIDGE WIDENING

EXCAVATION AND BACKFILL FOR BRIDGES IN CUT

Designer D. GROENEMAN	Structure	F-17-HO
Detailer S. DANKENBRING	Numbers	
Drawing Number B18 of 22 Drawings		

Revision Dates (Preliminary Stage Only)

AS CONSTRUCTED

NO REVISIONS 12-3-96 REVISED ____ VOID ____

FEDERAL RD REGION NO.	DIVISION	PROJ. NO.	SHEET NO.	TOTAL SHEETS
VIII	COLORADO	CC 4701-082	61	154

REVISIONS

DESIGN Initial EPL Date 11-95 Designed by EPL Checked by DDG

DETAIL Initial SED Date 11-95 Detailed by EPL Checked by

QUANTITIES Initial DDG Date 11-95 Quantities by EPL Checked by

BAR LIST – ABUTMENT 1

	Mark	No. Req'd.	Length	Type	Dimensions A	B	C
	10A001	2	4052	–			
(E)	15A001	3	4052	–			
	15A002	16	4052	–			
	15A003	6	1821	–			
	15A004	7	2134	I	1524	610	
	15A005	12	2134	I	1524	610	
	15A006	7	2490	I	1880	610	
	15A007	12	4129	II	1880	671	1578
	15A008	12	1607	III	192	704	519
	15A009	14	1339	IV	247	457	635
	15A010	2	2620	V	559	559	192
	20A001	10	1016	–			
	25A001	2	620	XI			
	25A002	1	620	XII	210	410	
	30A001	2	4052	–			
	10W001	3	3609	–			
	10W002	1	3542	–			
	10W003	1	3388	–			
	10W004	1	3235	–			
	10W005	1	3082	–			
	10W006	3	3119	–			
	10W007	1	2330	–			
	10W008	1	1439	–			
	10W009	1	3498	XIX	3038	460	
	10W010	7	1274	XX	533	741	
	10W011	3	915	–			
	10W012	7	1965	I	1829	136	
	15W001	5	3609	–			
	15W002	1	3488	–			
	15W003	1	3387	–			
	15W004	1	3285	–			
	15W005	1	3183	–			
	15W006	1	3082	–			
	15W007	1	5490	IX	2643	204	
	15W008	6	6446	IX	3121	204	
	15W009	2	3209	XVIII	1479	1730	
(E)	15W010	13	1423	I	686	737	
(E)	15W011	3	3227	–			
(E)	15W012	2	3227	–			
	15W013	5	915	–			
(E)	30W001	2	3505	–			

BAR SUMMARY

	74.22 m	#10M @ 0.785 kg/m	=	58 kg
(E)	46.79 m	#15M @ 1.570 kg/m	=	73 kg
	316.18 m	#15M @ 1.570 kg/m	=	496 kg
	10.16 m	#20M @ 2.355 kg/m	=	24 kg
	1.86 m	#25M @ 3.925 kg/m	=	7 kg
(E)	7.01 m	#30M @ 5.495 kg/m	=	39 kg
	8.10 m	#30M @ 5.495 kg/m	=	45 kg
		Total	=	630 kg
		(E) Total	=	112 kg

BAR LIST – PIER NO. 2

Mark	No. Req'd.	Length	Type	Dimensions A	B	C
10P001	23	2870	VI	360	900	350
10P002	132	1046	X	115	816	115
10P003	10	3875	XIII	115	1415	815
10P004	8	1825	–			
10P005	4	1365	–			
10P006	1	4075	–			
15P001	46	4515	VII	4075	440	
15P002	60	3277	IX	1345	587	
15P003		2877		1150	577	
	4 EA	BEI	IX			
15P011		2677		1150	377	
15P012	4	4075	–			
15P013	14	1729	–			
25P001	28	1870	–			
25P002		4555				
	2 EA	BEI	–			
25P007		4937				
25P008	20	2385	I	1975	410	
25P009	10	6505	I			
25P010	14	6475	I			
25P011	4	620	XI			
25P012	2	620	XII	210	410	
30P001	6	6045				
30P002	6	6555	VIII	6045	510	
30P003	4	3280	–			
30P004	6	1200	–			
30P005	11	6095	–			

BAR SUMMARY

266.97 m	#10M @ 0.785 kg/m	=	210 kg
544.79 m	#15M @ 1.570 kg/m	=	855 kg
316.43 m	#25M @ 3.925 kg/m	=	1242 kg
162.97 m	#30M @ 5.495 kg/m	=	896 kg
	Total	=	3203 kg

The "Mark" is intended to show location and size of the reinforcing. (ex. In 10PXXX, "P" means pier. The two digits before the letter indicate size: 10=#10M, 25=#25M, etc.)

BEI = By Equal Increments

BAR LIST – ABUTMENT 3

	Mark	No. Req'd.	Length	Type	Dimensions A	B	C
	10A002	2	4052	–			
(E)	15A011	3	4052	–			
	15A012	16	4052	–			
	15A013	6	1821	–			
	15A014	7	2134	I	1524	610	
	15A015	12	2134	I	1524	610	
	15A016	7	2490	I	1880	610	
	15A017	12	4129	II	1880	671	1578
	15A018	12	1607	III	192	704	519
	15A019	14	1339	IV	247	457	635
	15A020	2	2620	V	559	559	192
	20A002	10	1016	–			
	25A003	2	620	XI			
	25A004	1	620	XII	210	410	
	30A002	2	4052	–			
	10W013	3	3282	–			
	10W014	1	3263	–			
	10W015	1	3109	–			
	10W016	1	2956	–			
	10W017	1	2803	–			
	10W018	2	3051	–			
	10W019	1	2340	–			
	10W020	1	1425	–			
	10W021	1	3427	XIX	2967	460	
	10W022	6	1274	XX	533	741	
	10W023	3	915	–			
	10W024	7	1965	I	1829	136	
(E)	15W014	3	2922	–			
(E)	15W015	2	2922	–			
	15W016	5	3282	–			
	15W017	1	3209	–			
	15W018	1	3108	–			
	15W019	1	3006	–			
	15W020	1	2904	–			
	15W021	1	2803	–			
	15W022	1	5202	IX	2499	204	
	15W023	6	6310	IX	3053	204	
	15W024	2	3145	XVIII	1335	1810	
(E)	15W025	11	1423	I	686	737	
	15W026	5	915	–			
(E)	30W002	2	3505	–			

BAR SUMMARY

	67.52 m	#10M @ 0.785 kg/m	=	53 kg
(E)	42.42 m	#15M @ 1.570 kg/m	=	67 kg
	311.92 m	#15M @ 1.570 kg/m	=	490 kg
	10.16 m	#20M @ 2.355 kg/m	=	24 kg
	1.86 m	#25M @ 3.925 kg/m	=	7 kg
(E)	7.01 m	#30M @ 5.495 kg/m	=	39 kg
	8.10 m	#30M @ 5.495 kg/m	=	45 kg
		Total	=	619 kg
		(E) Total	=	106 kg

BENDING DIAGRAMS
Dimensions are out to out of bars.

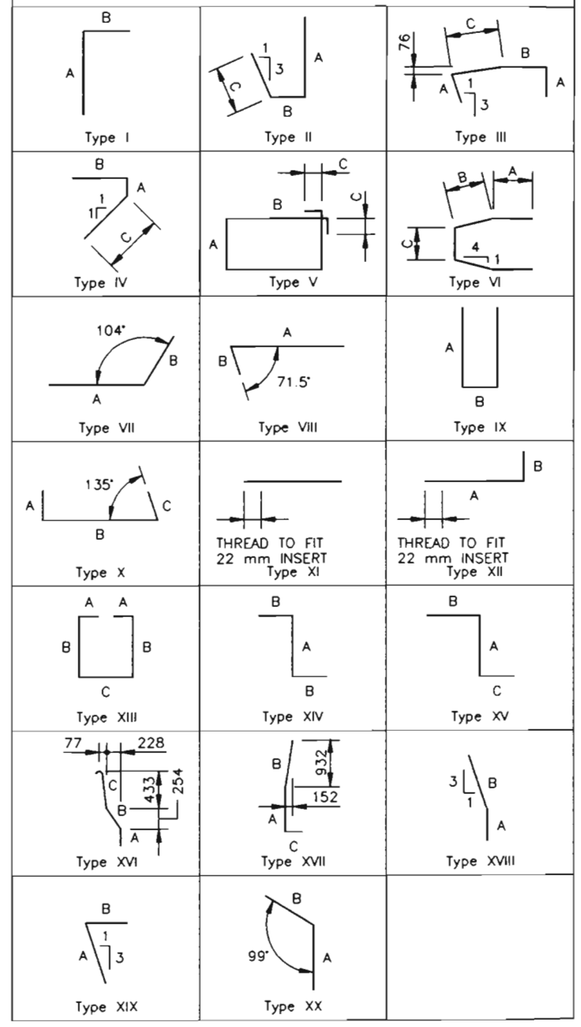

FELSBURG HOLT & ULLEVIG

COLORADO DEPARTMENT OF TRANSPORTATION

WB SH470 OVER ACRES GREEN DR.
BRIDGE WIDENING
BAR LIST

Designer E. LARSEN	Structure Numbers	F-17-HO	
Detailer S. DANKENBRING			
Drawing Number B19 of 22	Drawings		

Revision Dates (Preliminary Stage Only)

AS CONSTRUCTED

NO REVISIONS 12-3-96 REVISED ____ VOID ____

FEDERAL RD REGION NO.	DIVISION	PROJ. NO	SHEET NO.	TOTAL SHEETS
VIII	COLORADO	CC 4701-082	62	154

REVISIONS		

DESIGN Initial DDC EPL Date 11-95 — Designed by — Detailed by — Checked by — Date 11-96

QUANTITIES Initial DDC EPL Date 11-95 — Quantities by — Checked by — Date 11-95

BAR LIST – SUPERSTRUCTURE

	Mark	No. Req'd.	Length	Type	Dimensions A	B	C
(E)	10S001	70	18000	–			
(E)	10S002	35	7059	–			
	15S001	26	18000	–			
	15S002	13	7319	–			
	20S001	262	4963	–			
(E)	20S002	269	4963	–			
(E)	30S001	8	18000	I	17490	510	
(E)	30S002	4	9599	–			
(E)	30S003	5	7930	–			
(E)	30S004	5	8540	–			

BAR SUMMARY

(E)	1507.07	m	#10M @ 0.785 kg/m	=	1183 kg
	563.15	m	#15M @ 1.570 kg/m	=	884 kg
(E)	1335.05	m	#20M @ 2.355 kg/m	=	3144 kg
	1300.31	m	#20M @ 2.355 kg/m	=	3062 kg
(E)	264.75	m	#30M @ 5.495 kg/m	=	1455 kg
			Total	=	3946 kg
			(E) Total	=	5782 kg

BAR LIST – APPROACH SLAB

	Mark	No. Req'd.	Length	Type	Dimensions A	B	C
(E)	10Z001	32	4167	–			
(E)	10Z002	64	780	IX	300	180	
	10Z003	32	2828	V	180	1119	115
(E)	10Z004	30	4575	–			
	15Z001	46	4575	–			
	20Z001	62	4167	–			

BAR SUMMARY

(E)	320.51	m	#10M @ 0.785 kg/m	=	252 kg
	90.50	m	#10M @ 0.785 kg/m	=	71 kg
	210.50	m	#15M @ 1.570 kg/m	=	331 kg
	258.35	m	#20M @ 2.355 kg/m	=	608 kg
			Total	=	1010 kg
			(E) Total	=	252 kg

BAR LIST – ABUTMENT 1 RETAINING WALL

	Mark	No. Req'd.	Length	Type	Dimensions A	B	C
(E)	10RW001	4	8434	–			
	10RW002	1	8333	–			
	10RW003	1	8232	–			
	10RW004	1	2568	–			
	10RW005	1	2364	–			
	10RW006	12	2363	–			
	10RW007	4	1921	–			
	10RW008	6	2186	IX	610	966	
	10RW009	2	6378	–			
	10RW010	12	5768	–			
	10RW011	3	8434	–			
(E)	10RW012	1	2566	–			
	10RW013	6	1881	–			
	10RW014	12	1459	XIV	1187	136	
	10RW015	1	2467	–			
	10RW016	1	2366	–			
	10RW017	1	2465	–			
	10RW018	1	2568	–			
	10RW019	1	2467	–			
	10RW020	1	2366	–			
(E)	15RW001	5	2689	XV	1822	675	192
(E)	15RW002	26	1100	XVI	319	341	440
	15RW003	1	882	–			
	15RW004	1	2535	XVII	1399	944	192
	15RW005	5	2890	XVII	1754	944	192
	15RW006	18	1881	–			
	15RW007	18	1881	–			
(E)	15RW008	19	1209	I	1017	192	
	15RW009	19	1908	XVII	772	944	192
(E)	15RW010	1	2024	I	1349	675	

BAR SUMMARY

(E)	36.30	m	#10M @ 0.785 kg/m	=	28 kg
	221.42	m	#10M @ 0.785 kg/m	=	174 kg
(E)	67.04	m	#15M @ 1.570 kg/m	=	105 kg
	121.84	m	#15M @ 1.570 kg/m	=	191 kg
			Total	=	365 kg
			(E) Total	=	133 kg

BAR LIST – ABUTMENT 3 RETAINING WALL

	Mark	No. Req'd.	Length	Type	Dimensions A	B	C
(E)	10RW021	4	8434	–			
	10RW022	1	8328	–			
	10RW023	1	8222	–			
	10RW024	1	2553	–			
	10RW025	1	2354	–			
	10RW026	12	2338	–			
	10RW027	4	2001	–			
	10RW028	6	2186	IX	610	966	
	10RW029	2	6378	–			
	10RW030	12	5768	–			
	10RW031	3	8434	–			
(E)	10RW032	1	2566	–			
	10RW033	6	1881	–			
	10RW034	12	1535	XIV	1263	136	
	10RW035	1	2447	–			
	10RW036	1	2341	–			
	10RW037	1	2460	–			
	10RW038	1	2553	–			
	10RW039	1	2447	–			
	10RW040	1	2341	–			
(E)	15RW011	5	2765	XV	1898	675	192
(E)	15RW012	26	1100	XVI	319	341	440
	15RW013	1	882	–			
	15RW014	1	2535	XVII	1399	944	192
	15RW015	5	2966	XVII	1830	944	192
	15RW016	18	1881	–			
	15RW017	18	1881	–			
(E)	15RW018	19	1209	I	1017	192	
	15RW019	19	1908	XVII	772	944	192
(E)	15RW020	1	2024	I	1349	675	

BAR SUMMARY

(E)	36.3	m	#10M @ 0.785 kg/m	=	28 kg
	222.20	m	#10M @ 0.785 kg/m	=	174 kg
(E)	67.42	m	#15M @ 1.570 kg/m	=	106 kg
	122.22	m	#15M @ 1.570 kg/m	=	192 kg
			Total	=	366 kg
			(E) Total	=	134 kg

The "Mark" is intended to show location and size of the reinforcing. (ex. In 10PXXX, "P" means pier. The two digits before the letter indicote size: 10=#10M, 25=#25M, etc.)

BEI = By Equal Increments

BENDING DIAGRAMS
Dimensions are out to out of bars.

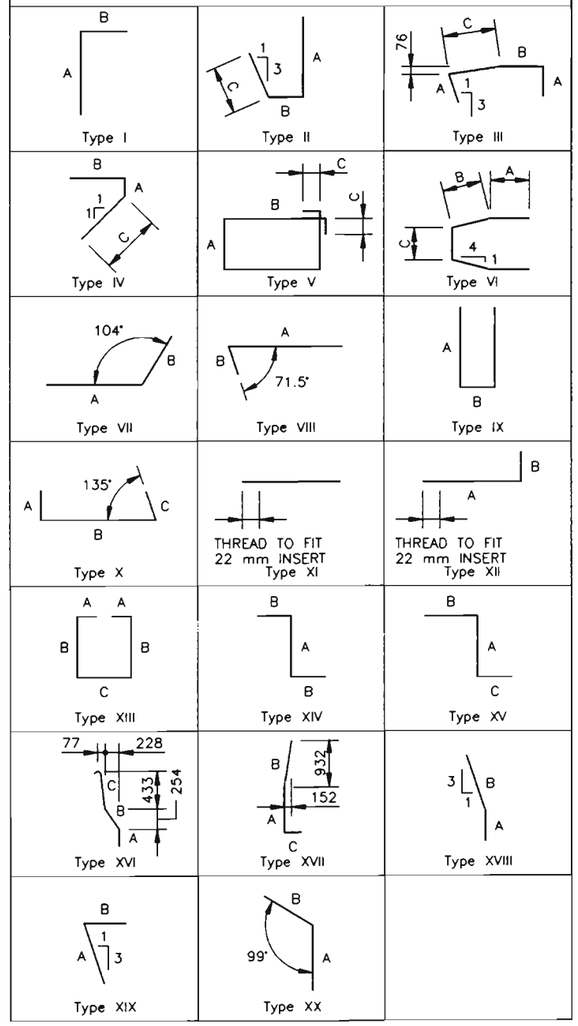

FELSBURG HOLT & ULLEVIG

COLORADO DEPARTMENT OF TRANSPORTATION

WB SH470 OVER ACRES GREEN DR.
BRIDGE WIDENING
BAR LIST

Designer D. GROENEMAN	Structure Numbers	F-17-HO	
Detailer S. DANKENBRING			
Drawing Number B20 of 22 Drawings			

Revision Dates (Preliminary Stage Only)

J:\95099\A\A95088*55.dgn 1.1 03/11/96 at 12:44 COMPUTER GENERATED DRAWING, DO NOT ALTER MANUALLY

BENT LINE DESCRIPTION OR FRACTIONAL POINT DESIGNATION	STATION	OFFSET	ELEVATION
OUTSIDE LEFT RAILING			
END WALL 1	0+243.7117	−7.7330	1758.2536
END WING 1	0+252.2461	−7.7330	1758.1171
BF ABUT 1	0+254.1511	−7.7330	1758.0866
CL BRG A1	0+254.5321	−7.7330	1758.0805
F−1	0+256.6606	−7.7330	1758.0464
F−2	0+258.7891	−7.7330	1758.0124
F−3	0+260.9176	−7.7330	1757.9783
F−4	0+263.0461	−7.7330	1757.9443
F−5	0+265.1746	−7.7330	1757.9102
F−6	0+267.3031	−7.7330	1757.8762
F−7	0+269.4316	−7.7330	1757.8421
F−8	0+271.5601	−7.7330	1757.8080
F−9	0+273.6886	−7.7330	1757.7740
CL BRG 2BK	0+275.8171	−7.7330	1757.7399
CL PIER 2	0+276.0201	−7.7330	1757.7367
CL BRG 2AH	0+276.2231	−7.7330	1757.7334
F−1	0+278.2297	−7.7330	1757.7013
F−2	0+280.2363	−7.7330	1757.6692
F−3	0+282.2429	−7.7330	1757.6371
F−4	0+284.2495	−7.7330	1757.6050
F−5	0+286.2561	−7.7330	1757.5729
F−6	0+288.2627	−7.7330	1757.5408
F−7	0+290.2693	−7.7330	1757.5087
F−8	0+292.2759	−7.7330	1757.4766
F−9	0+294.2825	−7.7330	1757.4445
CL BRG A3	0+296.2891	−7.7330	1757.4124
BF ABUT 3	0+296.6701	−7.7330	1757.4063
END WING 3	0+298.2704	−7.7330	1757.3807
END WALL 3	0+243.8055	−7.7330	1758.2441
LEFT EDGE DECK SLAB			
BF ABUT 1	0+254.1482	−7.5040	1758.0901
CL BRG A1	0+254.5292	−7.5040	1758.0840
F−1	0+256.6577	−7.5040	1758.0499
F−2	0+258.7862	−7.5040	1758.0159
F−3	0+260.9147	−7.5040	1757.9818
F−4	0+263.0432	−7.5040	1757.9477
F−5	0+265.1717	−7.5040	1757.9137
F−6	0+267.3002	−7.5040	1757.8796
F−7	0+269.4287	−7.5040	1757.8456
F−8	0+271.5572	−7.5040	1757.8115
F−9	0+273.6857	−7.5040	1757.7775
CL BRG 2BK	0+275.8142	−7.5040	1757.7434
CL PIER 2	0+276.0172	−7.5040	1757.7402
CL BRG 2AH	0+276.2202	−7.5040	1757.7369
F−1	0+278.2268	−7.5040	1757.7048
F−2	0+280.2334	−7.5040	1757.6727
F−3	0+282.2400	−7.5040	1757.6406
F−4	0+284.2466	−7.5040	1757.6085
F−5	0+286.2532	−7.5040	1757.5764
F−6	0+288.2598	−7.5040	1757.5443
F−7	0+290.2664	−7.5040	1757.5122
F−8	0+292.2730	−7.5040	1757.4801
F−9	0+294.2796	−7.5040	1757.4480
CL BRG A3	0+296.2862	−7.5040	1757.4159
BF ABUT 3	0+296.6672	−7.5040	1757.4098

BENT LINE DESCRIPTION OR FRACTIONAL POINT DESIGNATION	STATION	OFFSET	ELEVATION
OUTSIDE LEFT WING			
BF ABUT 1	0+254.1414	−6.9710	1758.0982
CL BRG A1	0+254.5224	−6.9710	1758.0921
CL BRG A3	0+296.2794	−6.9710	1757.4240
BF ABUT 3	0+296.6605	−6.9710	1757.4179
INSIDE LEFT WING			
END AP SLB	0+249.8704	−6.6660	1758.1711
BF ABUT 1	0+254.1376	−6.6660	1758.1028
CL BRG A1	0+254.5186	−6.6660	1758.0967
CL BRG A3	0+296.2756	−6.6660	1757.4286
BF ABUT 3	0+296.6566	−6.6660	1757.4225
END AP SLB	0+300.9241	−6.6660	1757.3542
CL GIRDER W1			
BF ABUT 1	0+254.1347	−6.4380	1758.1063
CL BRG A1	0+254.5157	−6.4380	1758.1002
F−1	0+256.6442	−6.4380	1758.0661
F−2	0+258.7727	−6.4380	1758.0321
F−3	0+260.9012	−6.4380	1757.9980
F−4	0+263.0297	−6.4380	1757.9640
F−5	0+265.1582	−6.4380	1757.9299
F−6	0+267.2867	−6.4380	1757.8958
F−7	0+269.4152	−6.4380	1757.8618
F−8	0+271.5436	−6.4380	1757.8277
F−9	0+273.6721	−6.4380	1757.7937
CL BRG 2BK	0+275.8006	−6.4380	1757.7596
CL PIER 2	0+276.0037	−6.4380	1757.7564
CL BRG 2AH	0+276.2067	−6.4380	1757.7531
F−1	0+278.2133	−6.4380	1757.7210
F−2	0+280.2199	−6.4380	1757.6889
F−3	0+282.2265	−6.4380	1757.6568
F−4	0+284.2331	−6.4380	1757.6247
F−5	0+286.2397	−6.4380	1757.5926
F−6	0+288.2463	−6.4380	1757.5605
F−7	0+290.2529	−6.4380	1757.5284
F−8	0+292.2595	−6.4380	1757.4963
F−9	0+294.2661	−6.4380	1757.4642
CL BRG A3	0+296.2727	−6.4380	1757.4321
BF ABUT 3	0+296.6537	−6.4380	1757.4260

BENT LINE DESCRIPTION OR FRACTIONAL POINT DESIGNATION	STATION	OFFSET	ELEVATION
CL GIRDER W2			
BF ABUT 1	0+254.1083	−4.3620	1758.1378
CL BRG A1	0+254.4893	−4.3620	1758.1317
F−1	0+256.6178	−4.3620	1758.0977
F−2	0+258.7463	−4.3620	1758.0636
F−3	0+260.8748	−4.3620	1758.0296
F−4	0+263.0033	−4.3620	1757.9955
F−5	0+265.1318	−4.3620	1757.9615
F−6	0+267.2603	−4.3620	1757.9274
F−7	0+269.3888	−4.3620	1757.8933
F−8	0+271.5173	−4.3620	1757.8593
F−9	0+273.6458	−4.3620	1757.8252
CL BRG 2BK	0+275.7743	−4.3620	1757.7912
CL PIER 2	0+275.9773	−4.3620	1757.7879
CL BRG 2AH	0+276.1803	−4.3620	1757.7847
F−1	0+278.1869	−4.3620	1757.7526
F−2	0+280.1935	−4.3620	1757.7205
F−3	0+282.2001	−4.3620	1757.6884
F−4	0+284.2067	−4.3620	1757.6563
F−5	0+286.2133	−4.3620	1757.6242
F−6	0+288.2199	−4.3620	1757.5921
F−7	0+290.2265	−4.3620	1757.5599
F−8	0+292.2331	−4.3620	1757.5278
F−9	0+294.2397	−4.3620	1757.4957
CL BRG A3	0+296.2463	−4.3620	1757.4636
BF ABUT 3	0+296.6274	−4.3620	1757.4575
RT EDGE WIDENED SLAB			
BF ABUT 1	0+254.0846	−2.4910	1758.1663
CL BRG A1	0+254.4656	−2.4910	1758.1602
F−1	0+256.5941	−2.4910	1758.1261
F−2	0+258.7226	−2.4910	1758.0921
F−3	0+260.8511	−2.4910	1758.0580
F−4	0+262.9796	−2.4910	1758.0240
F−5	0+265.1081	−2.4910	1757.9899
F−6	0+267.2366	−2.4910	1757.9558
F−7	0+269.3651	−2.4910	1757.9218
F−8	0+271.4936	−2.4910	1757.8877
F−9	0+273.6221	−2.4910	1757.8537
CL BRG 2BK	0+275.7506	−2.4910	1757.8196
CL PIER 2	0+275.9536	−2.4910	1757.8164
CL BRG 2AH	0+276.1566	−2.4910	1757.8131
F−1	0+278.1632	−2.4910	1757.7810
F−2	0+280.1698	−2.4910	1757.7489
F−3	0+282.1764	−2.4910	1757.7168
F−4	0+284.1830	−2.4910	1757.6847
F−5	0+286.1896	−2.4910	1757.6526
F−6	0+288.1962	−2.4910	1757.6205
F−7	0+290.2028	−2.4910	1757.5884
F−8	0+292.2094	−2.4910	1757.5563
F−9	0+294.2160	−2.4910	1757.5242
CL BRG A3	0+296.2226	−2.4910	1757.4921
BF ABUT 3	0+296.6036	−2.4910	1757.4860

BENT LINE DESCRIPTION OR FRACTIONAL POINT DESIGNATION	STATION	OFFSET	ELEVATION
HORIZ. CONTROL LINE			
BF ABUT 1	0+254.0530	0.0000	1758.2042
CL BRG A1	0+254.4340	0.0000	1758.1981
F−1	0+256.5625	0.0000	1758.1640
F−2	0+258.6910	0.0000	1758.1299
F−3	0+260.8195	0.0000	1758.0959
F−4	0+262.9480	0.0000	1758.0618
F−5	0+265.0765	0.0000	1758.0278
F−6	0+267.2050	0.0000	1757.9937
F−7	0+269.3335	0.0000	1757.9597
F−8	0+271.4620	0.0000	1757.9256
F−9	0+273.5905	0.0000	1757.8916
CL BRG 2BK	0+275.7190	0.0000	1757.8575
CL PIER 2	0+275.9220	0.0000	1757.8542
CL BRG 2AH	0+276.1250	0.0000	1757.8510
F−1	0+278.1316	0.0000	1757.8189
F−2	0+280.1382	0.0000	1757.7868
F−3	0+282.1448	0.0000	1757.7547
F−4	0+284.1514	0.0000	1757.7226
F−5	0+286.1580	0.0000	1757.6905
F−6	0+288.1646	0.0000	1757.6584
F−7	0+290.1712	0.0000	1757.6263
F−8	0+292.1778	0.0000	1757.5942
F−9	0+294.1844	0.0000	1757.5620
CL BRG A3	0+296.1910	0.0000	1757.5299
BF ABUT 3	0+296.5720	0.0000	1757.5238

AS CONSTRUCTED

NO REVISIONS 12-3-96 REVISED VOID

FEDERAL RD REGION NO.	DIVISION	PROJ. NO	SHEET NO.	TOTAL SHEETS
VIII	COLORADO	CC 4701-082	63	154

REVISIONS		

QUANTITIES			
	Initial	Date	
Quantities by	DOG	11-95	
Checked by	EPL	12-95	

DETAILING			
	Initial	Date	
Detailed by	EPL	11-95	
Checked by	DOG	1-96	

DESIGN			
	Initial	Date	
Designed by	EPL	11-95	
Checked by	DOG	1-96	

THESE STATIONS, COORDINATES, OFFSETS, AND LENGTHS DEFINE THE LAYOUT OF THE STRUCTURE IN A TWO DIMENSIONAL HORIZONTAL PLANE. ELEVATIONS DEFINE THE FINAL GRADE OF THE FINISHED CONCRETE DECK. FABRICATION OF STRUCTURAL COMPONENTS THRU THE DIRECT USE OF THIS INFORMATION IS NOT INTENDED OR ADVISABLE.

NOTE: ELEVATIONS ARE AT TOP OF CONCRETE DECK 50 MILLIMETERS (mm) BELOW FINISHED GRADE.

FELSBURG HOLT & ULLEVIG

COLORADO DEPARTMENT OF TRANSPORTATION

WB SH470 OVER ACRES GREEN DR. BRIDGE WIDENING DECK ELEVATIONS

Designer E. LARSEN	Structure Numbers	F-17-HO
Detailer E. LARSEN		
Drawing Number B21 of 22 Drawings		

Revision Dates (Preliminary Stage Only)

AS CONSTRUCTED				
NO REVISIONS 12-3-96	REVISED		VOID	

FEDERAL RD REGION NO.	DIVISION	PROJ. NO.	SHEET NO.	TOTAL SHEETS
VIII	COLORADO	CC 4701-082	64	154

REVISIONS		

ROADWAY APPROACHES

ELEVATIONS (m) ARE AT FINISHED GRADE

STATION	OFFSET (m) −7.2	−3.6	0.0
0+210	1758.8510	1758.9050	1758.9590
0+220	1758.6910	1758.7450	1758.7990
0+230	1758.5310	1758.5850	1758.6390
0+240	1758.3710	1758.4250	1758.4790
0+250	1758.2110	1758.2650	1758.3190
0+260	1758.0510	1758.1050	1758.1590
0+270	1757.8910	1757.9450	1757.9990
0+280	1757.7310	1757.7850	1757.8390
0+290	1757.5710	1757.6250	1757.6790
0+300	1757.4110	1757.4650	1757.5190
0+310	1757.2510	1757.3050	1757.3590
0+320	1757.0910	1757.1450	1757.1990
0+330	1756.9310	1756.9850	1757.0390
0+340	1756.7710	1756.8250	1756.8790

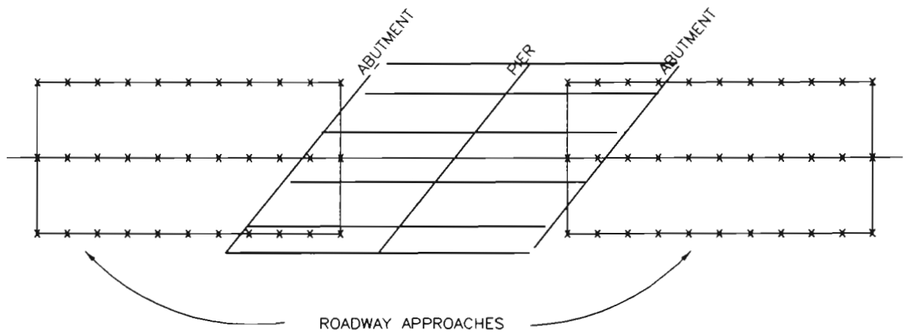

* TANGENT ALIGNMENT

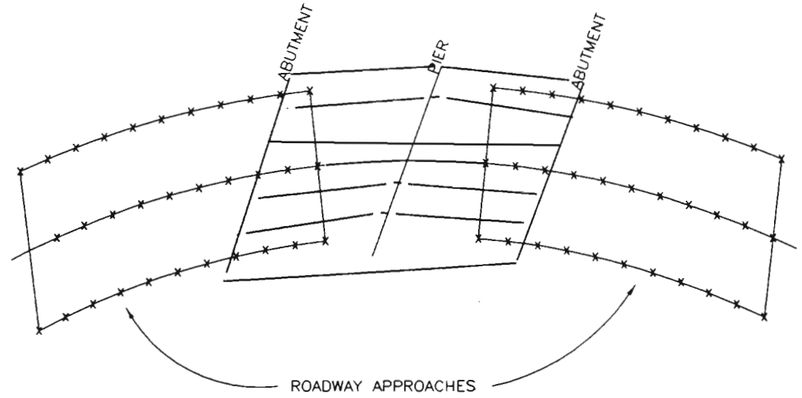

* HORIZONTAL CURVE ALIGNMENT

* THESE DRAWINGS ARE SCHEMATICS ONLY AND DO NOT NECESSARILY REFLECT THE ACTUAL BRIDGE LAYOUT.

DESIGN	Initial	Date
Designed by	EPL	11-95
Detailed by	EPL	11-95
Checked by	DDG	1-96
Quantities by	DDG	11-95
Checked by	EPL	12-95

FELSBURG HOLT & ULLEVIG

COLORADO DEPARTMENT OF TRANSPORTATION

WB SH470 OVER ACRES GREEN DR.
BRIDGE WIDENING
ROADWAY APPROACHES

Designer E. LARSEN	Structure Numbers	F-17-HO
Detailer E. LARSEN		
Drawing Number B22 of 22 Drawings		

Revision Dates (Preliminary Stage Only)

AS CONSTRUCTED			
NO REVISIONS 12-3-96	REVISED		VOID

FEDERAL RD REGION NO.	DIVISION	PROJ. NO.	SHEET NO.	TOTAL SHEETS
VIII	COLORADO	CC 4701-082	65	154

REVISIONS		

BEGIN PROJECT CC 4701-082

STA. 0+092 WB CONTROL LINE = 1320+98.75 PROJ. IXFU 470-1(17)

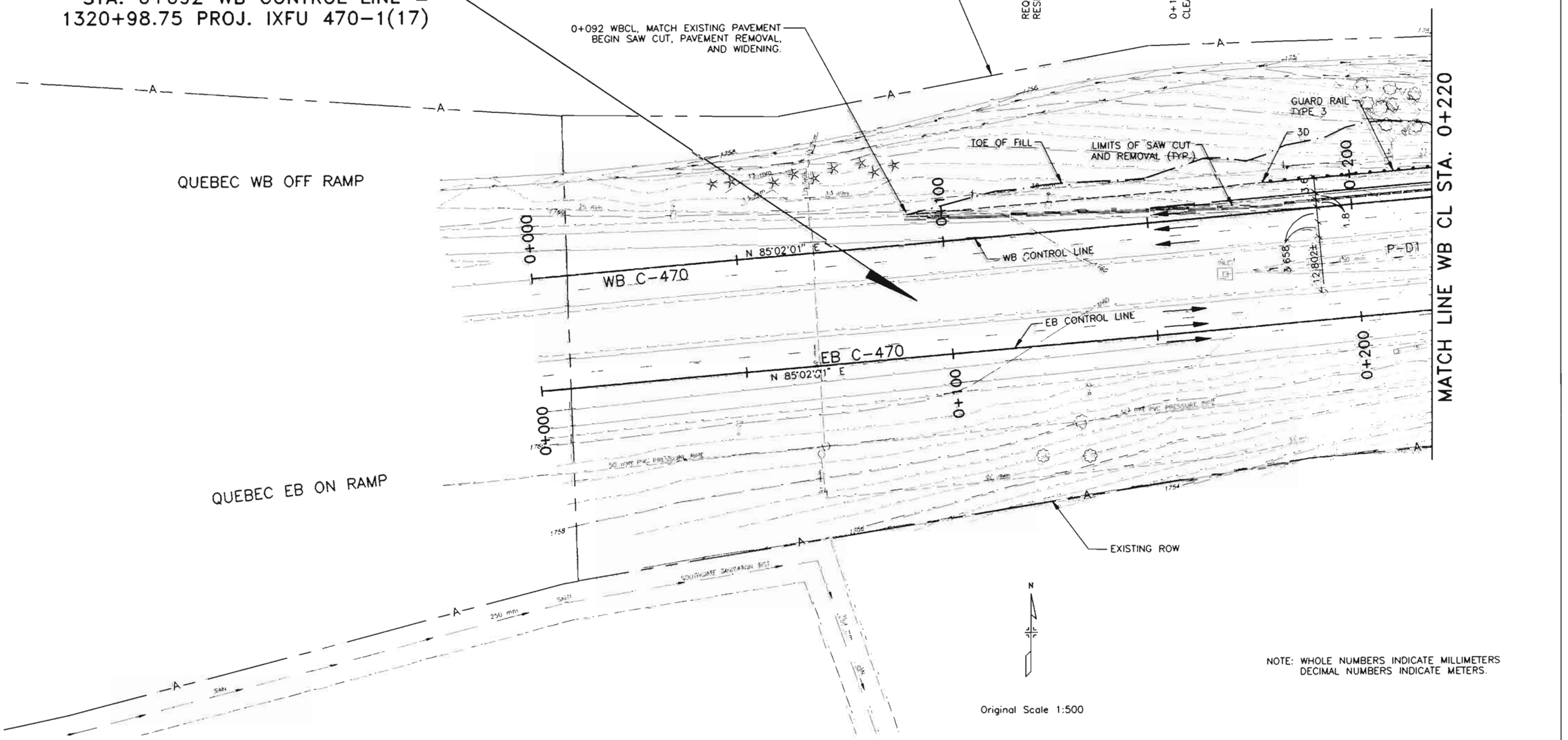

Original Scale 1:500

NOTE: WHOLE NUMBERS INDICATE MILLIMETERS
DECIMAL NUMBERS INDICATE METERS.

FELSBURG HOLT & ULLEVIG

C-470/YOSEMITE INTERCHANGE

PLAN SHEET
C-470 WBCL STA. 0+092 TO STA. 0+220

DATE	PROJECT NO.	DESIGNED BY CH	SHEET NO. 1	DRAWING NO.
JAN 96	95-088	DRAWN BY SS	OF 8 SHEETS	PL-1
		CHECKED BY DB		

AS CONSTRUCTED				
NO REVISIONS ☐	REVISED 12-3-96	VOID ☐		

FEDERAL RD REGION NO.	DIVISION	PROJ. NO.	SHEET NO.	TOTAL SHEETS
VIII	COLORADO	CC 4701-082	606	154

REVISIONS		

CURVE DATA WBML1

T_s = 217.997
E_s = 13.809
Θ = 1°52'24" R
L_s = 77.000
L.T. = 51.336
S.T. = 25.669
e = EXISTING

CURVE DATA EBML1

T_s = 239.868
E_s = 17.867
Θ = 1°52'04" R
L_s = 75.000
L.T. = 50.003
S.T. = 25.003
Δ_c = 18°08'32"
D_c = 04°58'52"
R_c = 1 150.270
L_c = 364.223
T_c = 183.648
e = EXISTING

ACRES GREEN DRIVE

0+306, 28 RT. EBCL TO 0+316, 84 LT. WBCL ~ REQ'D CLEAN CULVERT (P-E2)

0+310± LT. WBCL ~ REQ'D EMBANKMENT PROTECTOR TYPE 3 (EP-F1)

0+424 LT. WBCL ~ REQ'D MATCH EXISTING FENCE

BEGIN SHOULDER TAPER 0+495.251

END SHOULDER TAPER 0+555.251

COMBINATION WIRE FENCE WITH TREATED WOODEN POSTS

SC STA. 0+495.251 BACK
PC STA. 0+495.251 AHEAD

LIMITS OF SAW CUT AND REMOVAL (TYP.)

EXISTING ROW

BRIDGE WIDENING SEE BRIDGE PLANS

TOE OF FILL

0+397.400

0+418.251

3.0 BIKEPATH

1.8 TYP.

GUARD RAIL TYPE 3

GUARD RAIL TYPE 3

SLOTTED RAIL TERMINAL

CURVE WBML1

CURVE WBOR1

WB ON RAMP CONTROL LINE

WB CONTROL LINE

WB C-470

N 85°02'01" E

MATCH LINE WB CL STA. 0+220

MATCH LINE WB CL STA. 0+565

EB CONTROL LINE

CURVE EBML1

EB C-470

N 85°02'01" E

TOP OF CUT

EXISTING ROW

TS 0+419.729

SC 0+494.729

0+327.315, END SHOULDER TAPER.

TOE OF FILL

0+317.315, BEGIN SAW CUT AND PAVEMENT REMOVAL AND WIDENING. MATCH EXISTING END OF WALL. BEGIN SHOULDER TAPER.

LIMITS OF SAW CUT AND REMOVAL (TYP.)

0+225, ~ REQ'D CLEAN CULVERT (P-D2)

~~0+225, 29 RT. EBCL ~ REQ'D RELAY RIPRAP (RR-D2)~~

0+259 29 RT. TO 0+304, 30 RT. EBCL ~ REQ'D CLEAN CULVERT. (P-E1)

Original Scale 1:500

NOTE: WHOLE NUMBERS INDICATE MILLIMETERS
DECIMAL NUMBERS INDICATE METERS.

FELSBURG HOLT & ULLEVIG

C-470/YOSEMITE INTERCHANGE

PLAN SHEET
C-470 WBCL STA. 0+220 TO STA. 0+565

DATE	PROJECT NO.	DESIGNED BY CH	SHEET NO. 2	DRAWING NO.
FEB 96	95-088	DRAWN BY SS	OF 8 SHEETS	PL-2
		CHECKED BY DB		

AS CONSTRUCTED			
NO REVISIONS ☐	REVISED 12-3-96	VOID ☐	

FEDERAL RD REGION NO.	DIVISION	PROJ. NO.	SHEET NO.	TOTAL SHEETS
VIII	COLORADO	CC 4701-082	67	154

REVISIONS		

CURVE DATA WBOR1

PI STA. = 1+103.321
D_c = 04°41'19"
Δ = 52°54'36"
R = 1222.000
T = 608.071
L = 1128.462
e = .053m/m (EXIST. C470)
MDS = 120 KM/HR.
SSD > 290.000

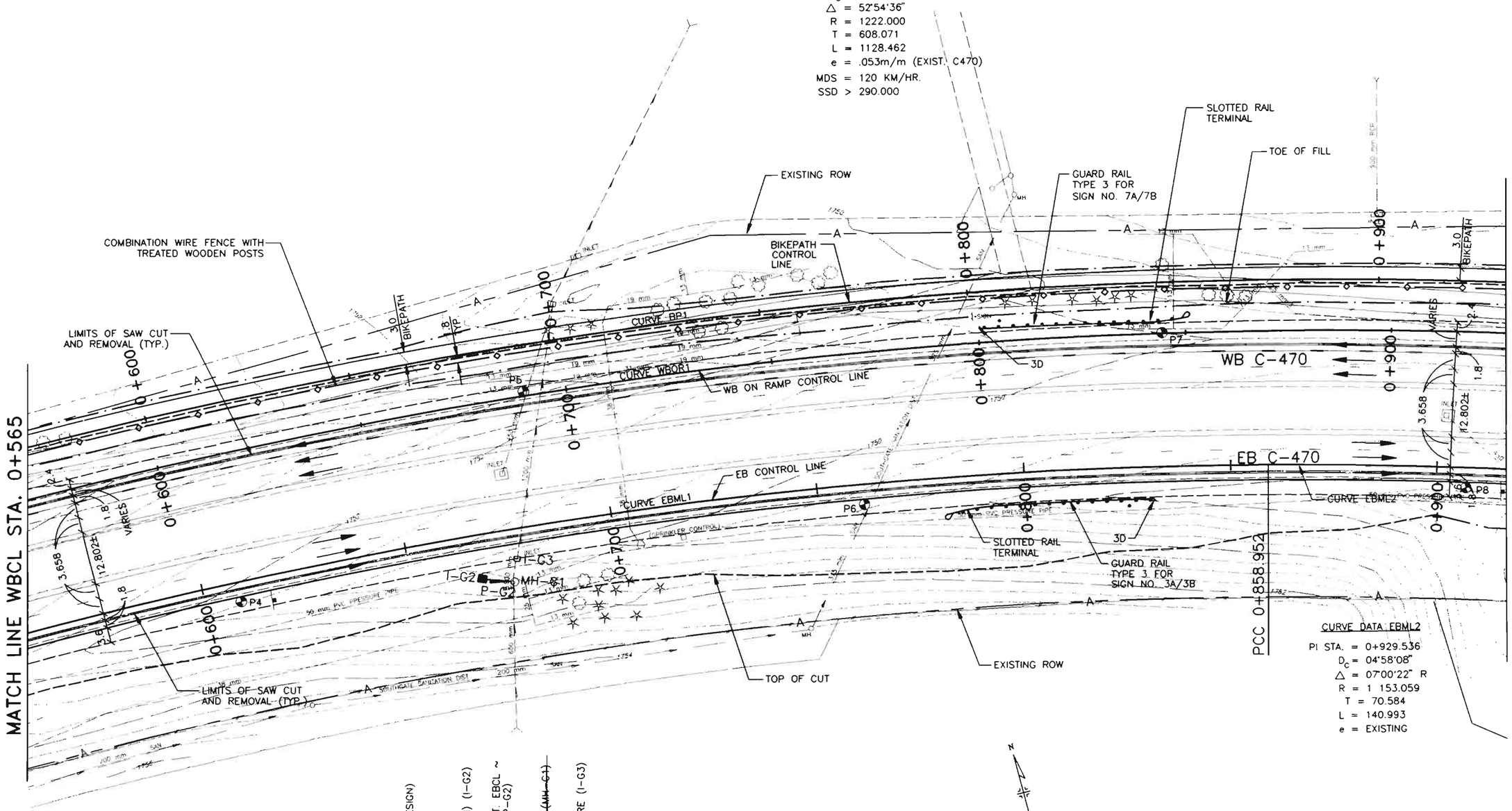

CURVE DATA EBML2

PI STA. = 0+929.536
D_c = 04°58'08"
Δ = 07°00'22" R
R = 1 153.059
T = 70.584
L = 140.993
e = EXISTING

DA = 12.95 ha
Q100 = 1.841 m3/s (DESIGN)
DHW = 1750.260 m
AHW = 1750.400 m

0+667, 10.5 RT. EBCL ~ REQ'D. INLET TYPE D (2M) (I-G2)

0+667, RT. TO 0+674 RT. EBCL ~ REQ'D 600 X 5.0 RCP (P-G2)

~~0+675, 13 RT. EBCL ~ REQ'D. MODIFY MANHOLE (MH-G1)~~

0+677, 7 RT. EBCL ~ REQ'D. REMOVE STRUCTURE (I-G3)

N

Original Scale 1:500

NOTE: WHOLE NUMBERS INDICATE MILLIMETERS
DECIMAL NUMBERS INDICATE METERS.

FELSBURG HOLT & ULLEVIG

C-470/YOSEMITE INTERCHANGE

PLAN SHEET
C-470 WBCL STA. 0+565 TO STA. 0+930

DATE	PROJECT NO.	DESIGNED BY CH	SHEET NO. 3	DRAWING NO.
FEB 96	95-088	DRAWN BY SS CHECKED BY DB	OF 8 SHEETS	PL-3

AS CONSTRUCTED					
NO REVISIONS 12-3-96	REVISED		VOID		

FEDERAL RD REGION NO	DIVISION	PROJ. NO.	SHEET NO.	TOTAL SHEETS
VIII	COLORADO	CC 4701-082	68	154

REVISIONS		

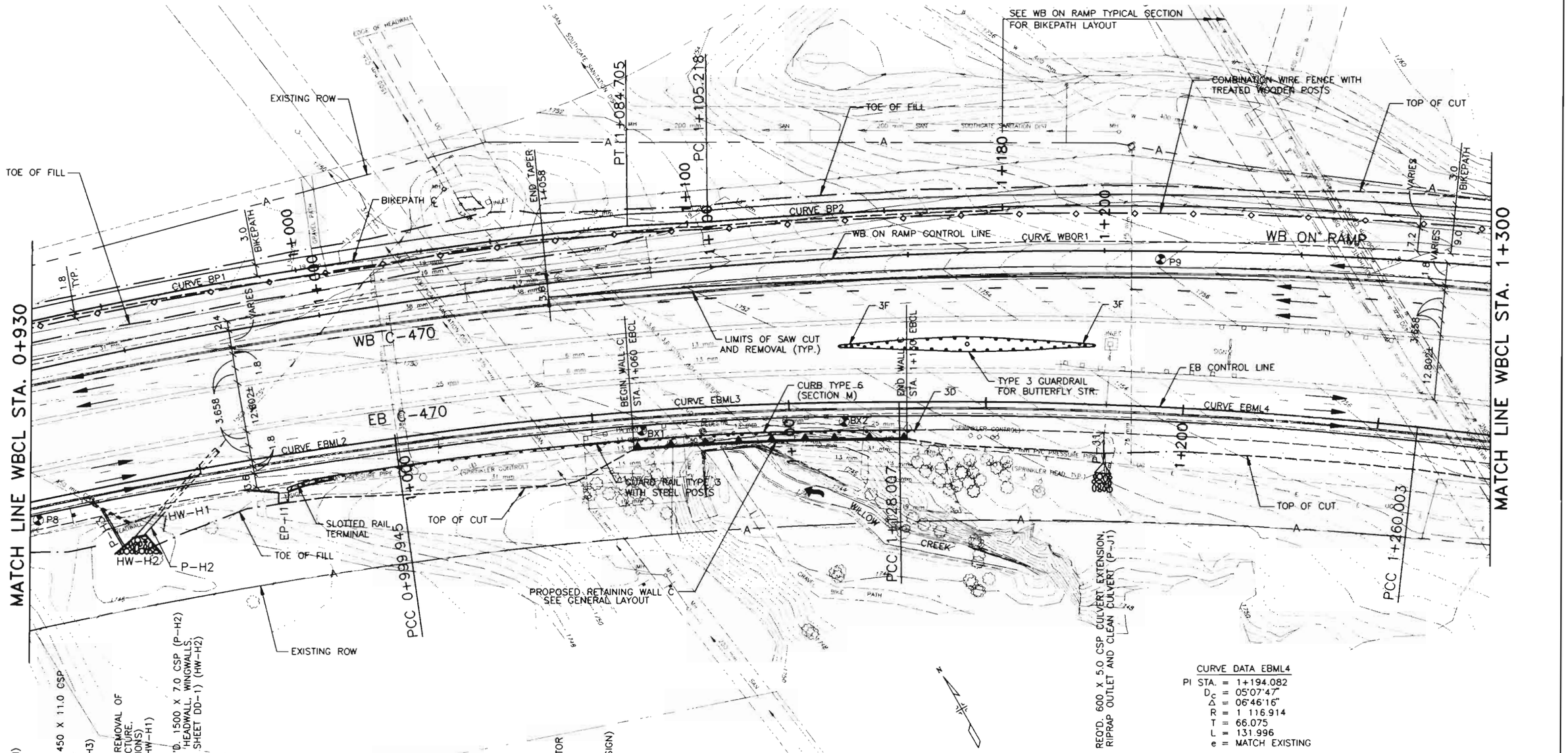

DA = 57.47 ha
Q100 = 4.02 m3/s (DESIGN)
DHW = 1747.254 m
AHW = 1747.400 m

0+924, RT. EBCL ~ REQ'D. 450 X 11.0 CSP EXTENSION TO EXISTING CSP. DAYLIGHT AT NEW WINGWALL (SEE DETAIL SHEET DD-1)(PH3)

0+938, RT. EBCL ~ REQ'D. REMOVAL OF PORTIONS OF PRESENT STRUCTURE. REMOVE OBSTRUCTIONS (GABIONS) (SEE DETAIL SHEET DD-1) (HW-H1)

0+932, 14 RT. EBCL ~ REQ'D. 1500 X 7.0 CSP (P-H2) EXTENSION TO EXISTING CSP, HEADWALL, WINGWALLS, AND RIPRAP (GABIONS) (SEE SHEET DD-1) (HW-H2)

0+970± RT. EBCL ~ REQ'D. EMBANKMENT PROTECTOR TYPE 5 (EP-11)

DA = 1125.0 ha
Q100 = 113.267 m3/s (DESIGN)
DHW =
AHW =

1+180, RT. EBCL ~ REQ'D. 600 X 5.0 CSP CULVERT EXTENSION, RESET END SECTION, RIPRAP OUTLET AND CLEAN CULVERT (P-J1)

CURVE DATA EBML3
PI STA. = 1+064.097
D_c = 06°42'57"
Δ = 08°36'01"
R = 853.160
T = 64.152
L = 128.062
e = MATCH EXISTING

CURVE DATA EBML4
PI STA. = 1+194.082
D_c = 05°07'47"
Δ = 06°46'16"
R = 1 116.914
T = 66.075
L = 131.996
e = MATCH EXISTING

Original Scale 1:500

NOTE: WHOLE NUMBERS INDICATE MILLIMETERS
DECIMAL NUMBERS INDICATE METERS.

FELSBURG HOLT & ULLEVIG

C-470/YOSEMITE INTERCHANGE

PLAN SHEET
C-470 WBCL STA. 0+930 TO STA. 1+300

DATE	PROJECT NO.	DESIGNED BY	CH.	SHEET NO.	4	DRAWING NO.
FEB 96	95-088	DRAWN BY	SS	OF	8 SHEETS	PL-4
		CHECKED BY	DB			

AS CONSTRUCTED			
NO REVISIONS ☐	REVISED 12-3-96	VOID ☐	

FEDERAL RD REGION NO.	DIVISION	PROJ. NO	SHEET NO.	TOTAL SHEETS
VIII	COLORADO	CC 4701-082	69	154

REVISIONS		

CURVE DATA WBOR1
PI STA. = 1+103.321
D_c = 4°41'19"
Δ = 52°54'36"
R = 1 222.000
T = 608.070
L = 1 128.462
e = 0.053m/m (EXIST C470)
MDS = 120 KM/HR.
SSD_H > 290.000

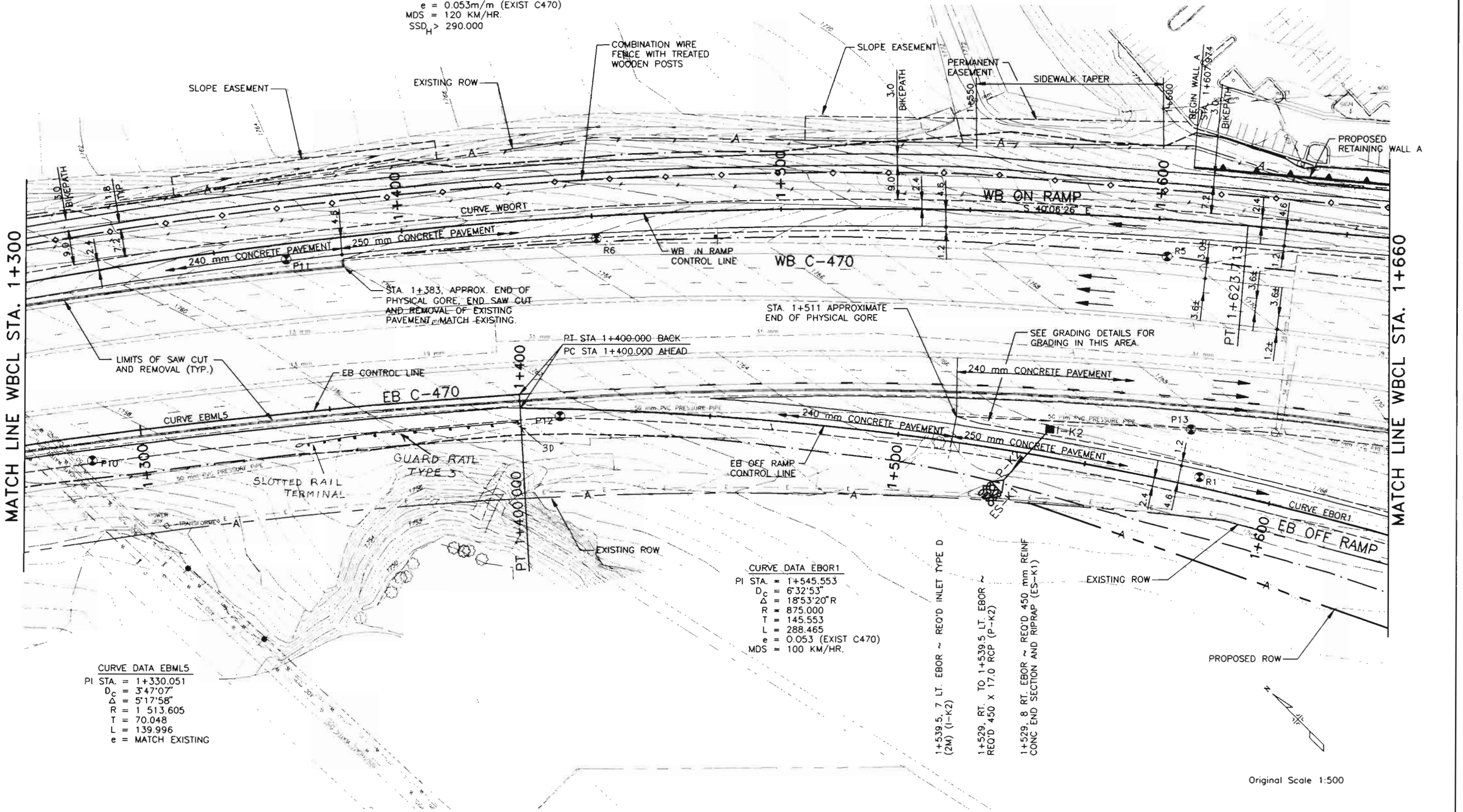

CURVE DATA EBML5
PI STA. = 1+330.051
D_c = 3°47'07"
Δ = 5°17'58"
R = 1 513.605
T = 70.048
L = 139.996
e = MATCH EXISTING

CURVE DATA EBOR1
PI STA. = 1+545.553
D_c = 6°32'53"
Δ = 18°53'20"R
R = 875.000
T = 145.553
L = 288.465
e = 0.053 (EXIST C470)
MDS = 100 KM/HR.

1+539.5, 7 LT. EBOR ~ REQ'D INLET TYPE D (2M) (1-K2)

1+529, RT. TO 1+539.5 LT. EBOR ~ REQ'D 450 X 17.0 RCP (P-K2)

1+529, 8 RT. EBOR ~ REQ'D 450 mm REINF CONC END SECTION AND RIPRAP (ES-K1)

Original Scale 1:500

NOTE: WHOLE NUMBERS INDICATE MILLIMETERS
DECIMAL NUMBERS INDICATE METERS.

FELSBURG HOLT & ULLEVIG

C-470/YOSEMITE INTERCHANGE

PLAN SHEET
C-470 WBCL STA. 1+300 TO STA. 1+660

DATE	PROJECT NO.	DESIGNED BY CH	SHEET NO. 5	DRAWING NO.
FEB 96	95-088	DRAWN BY SS	OF 8 SHEETS	PL-5
		CHECKED BY DB		

AS CONSTRUCTED				
NO REVISIONS ☐	REVISED 12-3-96	VOID ☐		

FEDERAL RD REGION NO.	DIVISION	PROJ. NO.	SHEET NO.	TOTAL SHEETS
VIII	COLORADO	CC 4701-082	70	154

REVISIONS		

WEST BOUND ON RAMP STORM SEWER

1+838.5, 18 RT. WBCL ~ REQ'D REMOVE END SECTION (ES-B1)
1+838.5 RT. TO 1+847 RT. WBCL ~ REQ'D 900 X 9.5 CSP (P-B2)
1+847, 13 RT. WBCL ~ REQ'D INLET TYPE D (4M) (I-B2)
1+847 RT. TO 1+848.5 LT. WBCL ~ REQ'D 600 X 17.5 RCP (P-B4)
1+848.5, 5.5 LT. WBCL ~ REQ'D INLET TYPE C (2M) (I-B4)
1+848.5 WBCL TO 1+307.689 LT. YCL ~ REQ'D 450 X 13.5 RCP (P-B5)
1+307.689, 18.189 LT. YCL~ REQ'D INLET TYPE R L4.5 (2M) (I-B5)
1+847 RT. TO 1+859.5 RT. WBCL ~ REQ'D 900 X 12.0 CSP (P-B3)
1+859.5, 12 RT. WBCL ~ REQ'D REMOVE END SECTION (ES-B3)

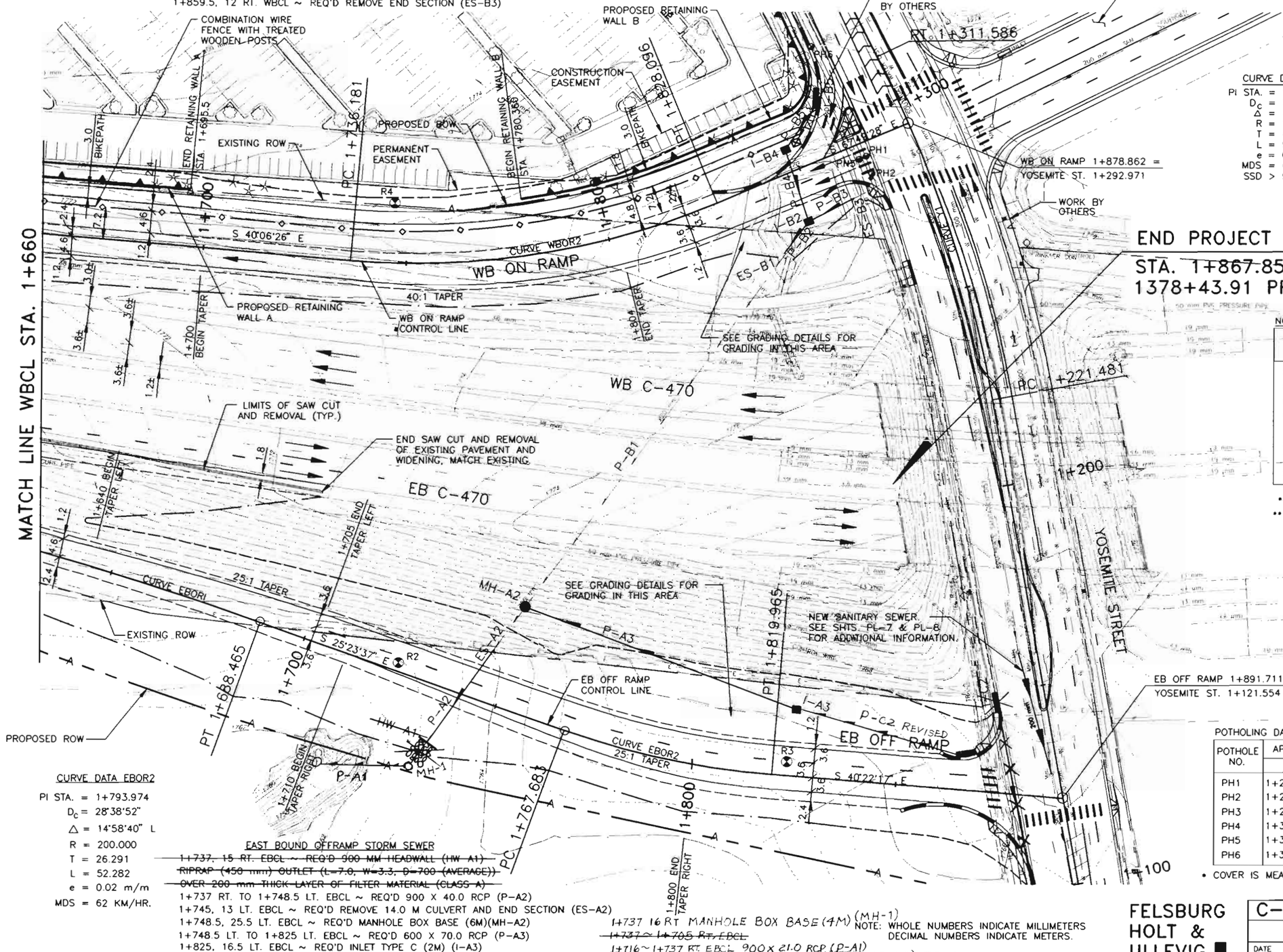

CURVE DATA WBOR2

PI STA. = 1+783.056
D_c = 30°09'20"
Δ = 27°43'02"
R = 190.000
T = 46.875
L = 91.914
e = 0.02 m/m
MDS = 60km/hr
SSD > 90.000

CURVE DATA Y1

PI STA. = 1+266.876
D_c = 19°05'55"
Δ = 17°12'32"
R = 300.000
T = 45.395
L = 90.106
e = existing

END PROJECT CC 4701-082

STA. 1+867.85 WB CONTROL LINE = 1378+43.91 PROJ. IXFU 470-1(17)

NORTH RAMP TRAVEL SPEED

STATION	*TRAVEL SPEED	CLEAR ZONE REQ'D.(m) ** CUT	FILL
1+830 (PCR)	30 kmh	5	5
1+809	40 kmh	5	5
1+788	50 kmh	5	5
1+750	60 kmh	5	5
1+695	70 kmh	7	6
1+630	80 kmh	7	6
1+530	90 kmh	7.5	7.5
1+450	100 kmh	9.5	10.5

* USING AASHTO (1994) FIGURE 11-16
** USING AASHTO ROADSIDE DESIGN GUIDE 1988 TABLE 3.1 WITH 6:1 SLOPES

POTHOLING DATA

POTHOLE NO.	APPROX. LOCATION STA.	OFFSET	DESCRIPTION	COVER *
PH1	1+289.5 YCL	12.7 L	64 mm TCI CABLE	.9144m
PH2	1+284.5 YCL	12.9 L	482 mm TELE.	.8931m
PH3	1+289.5 YCL	14.7 L	64 mm FIBRE ELEC.	1.597m
PH4	1+346.5 YCL	13.4 L	76 mm CONDUIT	.6218m
PH5	1+347.5 YCL	13.5 L	R/POUR TEL. COND.	1.158m
PH6	1+320.9 YCL	13.3 L	102 mm ELECTRIC	1.884m

* COVER IS MEASURED FROM EXISTING GROUND TO TOP OF UTILITY.

CURVE DATA EBOR2

PI STA. = 1+793.974
D_c = 28°38'52"
Δ = 14°58'40" L
R = 200.000
T = 26.291
L = 52.282
e = 0.02 m/m
MDS = 62 KM/HR.

EAST BOUND OFFRAMP STORM SEWER

~~1+737, 15 RT. EBCL ~ REQ'D 900 MM HEADWALL (HW A1)~~
~~RIPRAP (450 mm) OUTLET (L=7.0, W=3.3, D=700 (AVERAGE))~~
~~OVER 200 mm THICK LAYER OF FILTER MATERIAL (CLASS A)~~
1+737 RT. TO 1+748.5 LT. EBCL ~ REQ'D 900 X 40.0 RCP (P-A2)
1+745, 13 LT. EBCL ~ REQ'D REMOVE 14.0 M CULVERT AND END SECTION (ES-A2)
1+748.5, 25.5 LT. EBCL ~ REQ'D MANHOLE BOX BASE (6M)(MH-A2)
1+748.5 LT. TO 1+825 LT. EBCL ~ REQ'D 600 X 70.0 RCP (P-A3)
1+825, 16.5 LT. EBCL ~ REQ'D INLET TYPE C (2M) (I-A3)
1+838.5, 18 RT. WBCL TO 1+748.5, 25.5 LT. EBCL ~ REQ'D CLEAN CULVERT (P-81)

1+737 16 RT MANHOLE BOX BASE (4M) (MH-1)
~~1+737 ~ 1+705 RT. EBCL~~
1+716 ~ 1+737 RT. EBCL 900 X 21.0 RCP (P-A1)
1+825 ~ 1+875 LT. EBCL 450 X 50.0 RCP (P-C2) REVISED

NOTE: WHOLE NUMBERS INDICATE MILLIMETERS DECIMAL NUMBERS INDICATE METERS.

FELSBURG HOLT & ULLEVIG

C-470/YOSEMITE INTERCHANGE

PLAN SHEET
C-470 WBCL STA. 1+660 TO STA. 1+878.862

DATE	PROJECT NO.	DESIGNED BY CH	SHEET NO. 6	DRAWING NO.
FEB 96	95-088	DRAWN BY SS	OF 8 SHEETS	PL-6
		CHECKED BY DB		

AS CONSTRUCTED				
NO REVISIONS		REVISED 12-3-96	VOID	

FEDERAL RD REGION NO.	DIVISION	PROJ. NO.	SHEET NO.	TOTAL SHEETS
VIII	COLORADO	CC 4701-082	71	154

REVISIONS

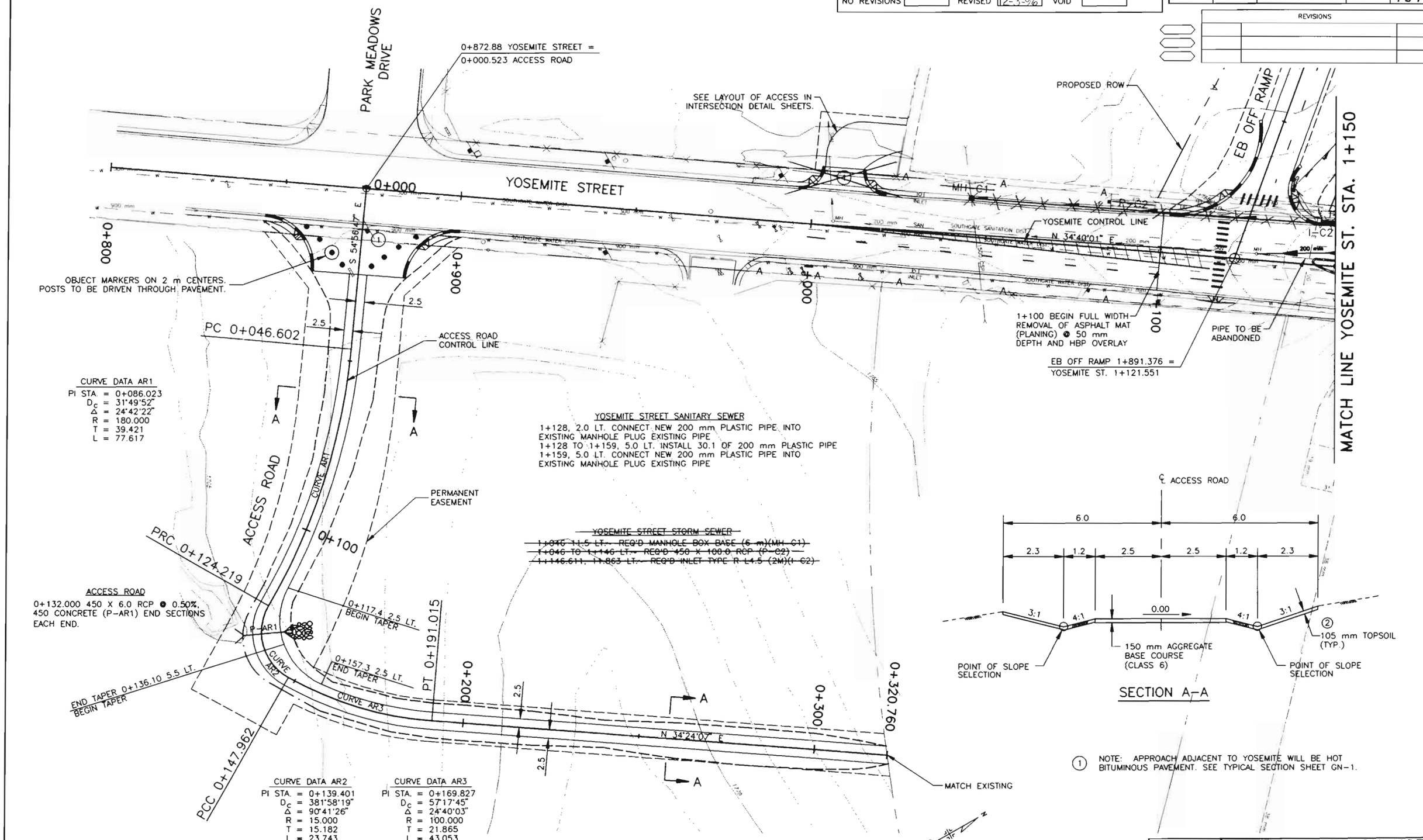

① NOTE: APPROACH ADJACENT TO YOSEMITE WILL BE HOT BITUMINOUS PAVEMENT. SEE TYPICAL SECTION SHEET GN-1.

NOTE: WHOLE NUMBERS INDICATE MILLIMETERS
DECIMAL NUMBERS INDICATE METERS.

Original Scale 1:500

FELSBURG HOLT & ULLEVIG

C-470/YOSEMITE INTERCHANGE

PLAN SHEET YOSEMITE STREET STA. 0+800 TO STA. 1+150
ACCESS ROAD STA. 0+000 TO STA. 0+320.76

DATE	PROJECT NO.	DESIGNED BY	DRAWN BY	CHECKED BY	SHEET NO.	DRAWING NO.
FEB 96	95-088	CH	SS	DB	7 OF 8 SHEETS	PL-7

AS CONSTRUCTED			
NO REVISIONS ☐	REVISED 12-3-96	VOID ☐	

FEDERAL RD REGION NO.	DIVISION	PROJ. NO.	SHEET NO.	TOTAL SHEETS
VIII	COLORADO	CC 4701-082	71A	154

REVISIONS			
R-2	7/11/96	ACCESS ROAD NEW LAYOUT	CH

PARK MEADOWS DRIVE

0+872.88 YOSEMITE STREET =
0+000.523 ACCESS ROAD

SEE LAYOUT OF ACCESS IN INTERSECTION DETAIL SHEETS.

PROPOSED ROW

EB OFF RAMP

YOSEMITE STREET

0+000

0+800

0+900

1+000

1+100

MH C1

YOSEMITE CONTROL LINE
N 34°40'01" E

C2

OBJECT MARKERS ON 2 m CENTERS.
POSTS TO BE DRIVEN THROUGH PAVEMENT.

S 54°56'47" E

2.5

2.5

PC 0+046.602

ACCESS ROAD CONTROL LINE

1+100 BEGIN FULL WIDTH REMOVAL OF ASPHALT MAT (PLANING) @ 50 mm DEPTH AND HBP OVERLAY

PIPE TO BE ABANDONED

EB OFF RAMP 1+891.376 =
YOSEMITE ST. 1+121.551

MATCH LINE YOSEMITE ST. STA. 1+150

CURVE DATA AR1

PI STA. = 0+086.023
D_c = 31°49'52"
Δ = 24°42'22"
R = 180.000
T = 39.421
L = 77.617

A

A

ACCESS ROAD

CURVE AR1

PERMANENT EASEMENT

PRC 0+124.219

0+100

0+117.4 2.5 LT. BEGIN TAPER

ACCESS ROAD

0+132.000 450 X 6.0 RCP @ 0.50%.
450 CONCRETE (P-AR1) END SECTIONS EACH END.

1P-AR1

CURVE AR2

0+157.3 2.5 LT. END TAPER

END TAPER 0+136.10 5.5 LT.
BEGIN TAPER

PT 0+191.015

0+200

CURVE AR3

2.5

2.5

A

A

0+300

0+320.760

N 34°24'07" E

MATCH EXISTING

PCC 0+147.962

YOSEMITE STREET SANITARY SEWER

1+128, 2.0 LT. CONNECT NEW 200 mm PLASTIC PIPE INTO EXISTING MANHOLE PLUG EXISTING PIPE
1+128 TO 1+159, 5.0 LT. INSTALL 30.1 OF 200 mm PLASTIC PIPE
1+159, 5.0 LT. CONNECT NEW 200 mm PLASTIC PIPE INTO EXISTING MANHOLE PLUG EXISTING PIPE

~~YOSEMITE STREET STORM SEWER~~

~~1+046 11.5 LT.~ REQ'D MANHOLE BOX BASE (6 m)(MH1-C1)~~
~~1+046 TO 1+146 LT.~ REQ'D 450 X 100.0 RCP (P-02)~~
~~1+146.611, 11.863 LT.~ REQ'D INLET TYPE R L4.5 (2M)(I-02)~~

CURVE DATA AR2

PI STA. = 0+139.401
D_c = 381°58'19"
Δ = 90°41'26"
R = 15.000
T = 15.182
L = 23.743

CURVE DATA AR3

PI STA. = 0+169.827
D_c = 57°17'45"
Δ = 24°40'03"
R = 100.000
T = 21.865
L = 43.053

NOTE: WHOLE NUMBERS INDICATE MILLIMETERS
DECIMAL NUMBERS INDICATE METERS.

Original Scale 1:500

℄ ACCESS ROAD

6.0 6.0

2.3 1.2 2.5 2.5 1.2 2.3

3:1 4:1 0.00 4:1 3:1

② 105 mm TOPSOIL (TYP.)

150 mm AGGREGATE BASE COURSE (CLASS 6)

POINT OF SLOPE SELECTION

POINT OF SLOPE SELECTION

SECTION A-A

① NOTE: APPROACH ADJACENT TO YOSEMITE WILL BE HOT BITUMINOUS PAVEMENT. SEE TYPICAL SECTION SHEET GN-1.

FELSBURG HOLT & ULLEVIG

C-470/YOSEMITE INTERCHANGE

PLAN SHEET YOSEMITE STREET STA. 0+800 TO STA. 1+150
ACCESS ROAD STA. 0+000 TO STA. 0+320.76

DATE	PROJECT NO	DESIGNED BY CH	SHEET NO. 7	DRAWING NO
FEB 96	95-088	DRAWN BY SS	OF 8 SHEETS	PL-7
		CHECKED BY DB		

AS CONSTRUCTED					
NO REVISIONS 12-3-96	REVISED		VOID		

FEDERAL RD REGION NO	DIVISION	PROJ. NO	SHEET NO	TOTAL SHEETS
VIII	COLORADO	CC 4701-082	72	154

REVISIONS		

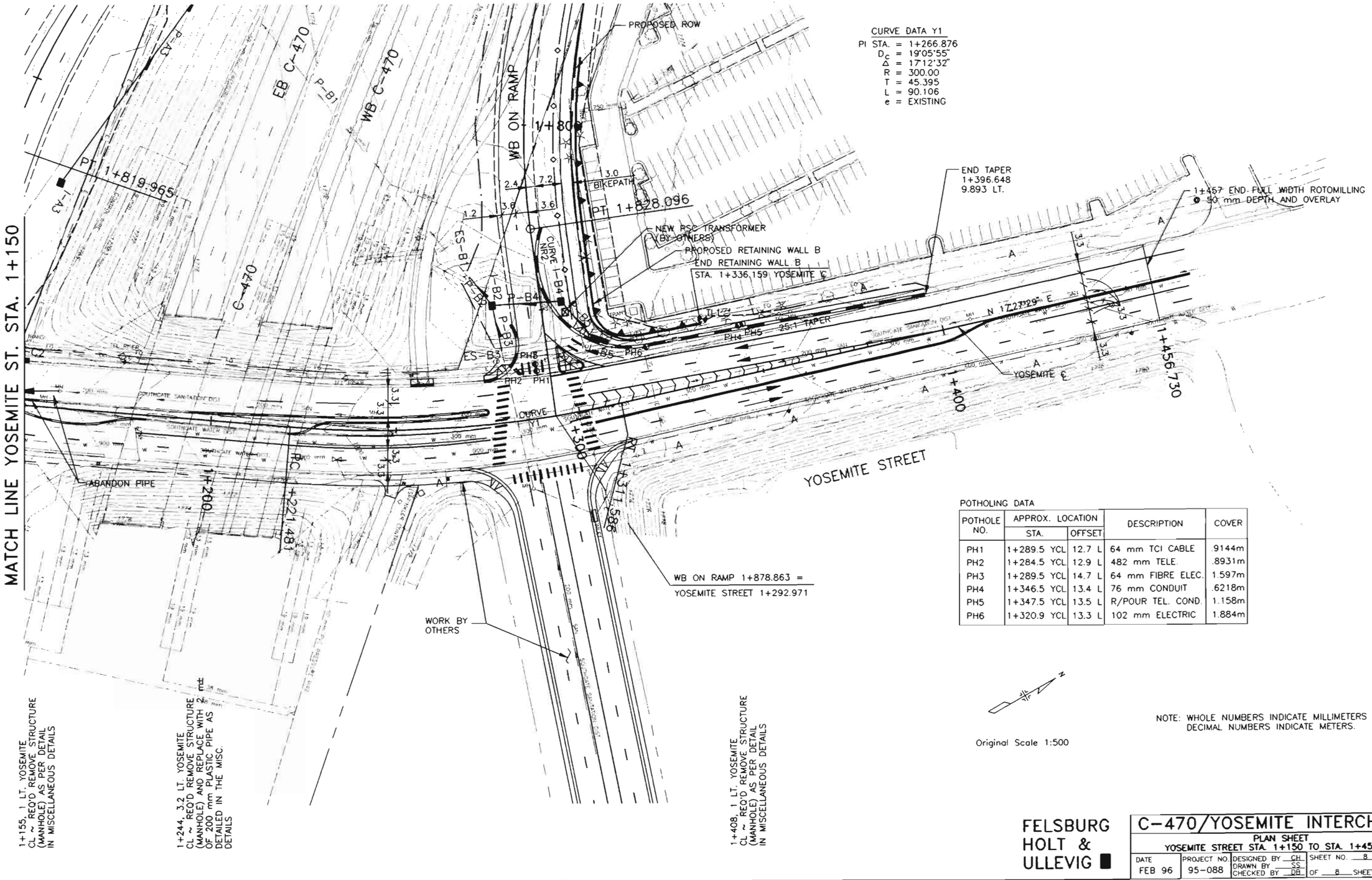

CURVE DATA Y1

PI STA. = 1+266.876
D_c = 19°05'55"
Δ = 17°12'32"
R = 300.00
T = 45.395
L = 90.106
e = EXISTING

POTHOLING DATA

POTHOLE NO.	APPROX. LOCATION STA.	APPROX. LOCATION OFFSET	DESCRIPTION	COVER
PH1	1+289.5 YCL	12.7 L	64 mm TCI CABLE	.9144m
PH2	1+284.5 YCL	12.9 L	482 mm TELE.	.8931m
PH3	1+289.5 YCL	14.7 L	64 mm FIBRE ELEC.	1.597m
PH4	1+346.5 YCL	13.4 L	76 mm CONDUIT	.6218m
PH5	1+347.5 YCL	13.5 L	R/POUR TEL. COND.	1.158m
PH6	1+320.9 YCL	13.3 L	102 mm ELECTRIC	1.884m

Original Scale 1:500

NOTE: WHOLE NUMBERS INDICATE MILLIMETERS
DECIMAL NUMBERS INDICATE METERS.

FELSBURG HOLT & ULLEVIG

C-470/YOSEMITE INTERCHANGE

PLAN SHEET
YOSEMITE STREET STA. 1+150 TO STA. 1+456.730

DATE	PROJECT NO.	DESIGNED BY CH	SHEET NO. 8	DRAWING NO.
FEB 96	95-088	DRAWN BY SS	OF 8 SHEETS	PL-8
		CHECKED BY DB		

AS CONSTRUCTED			
NO REVISIONS 12-3-96	REVISED	VOID	

FEDERAL RD REGION NO.	DIVISION	PROJ. NO.	SHEET NO.	TOTAL SHEETS
VIII	COLORADO	CC 4701-082	73	83

REVISIONS		

SCALE 1:500 HORIZONTAL
1:50 VERTICAL

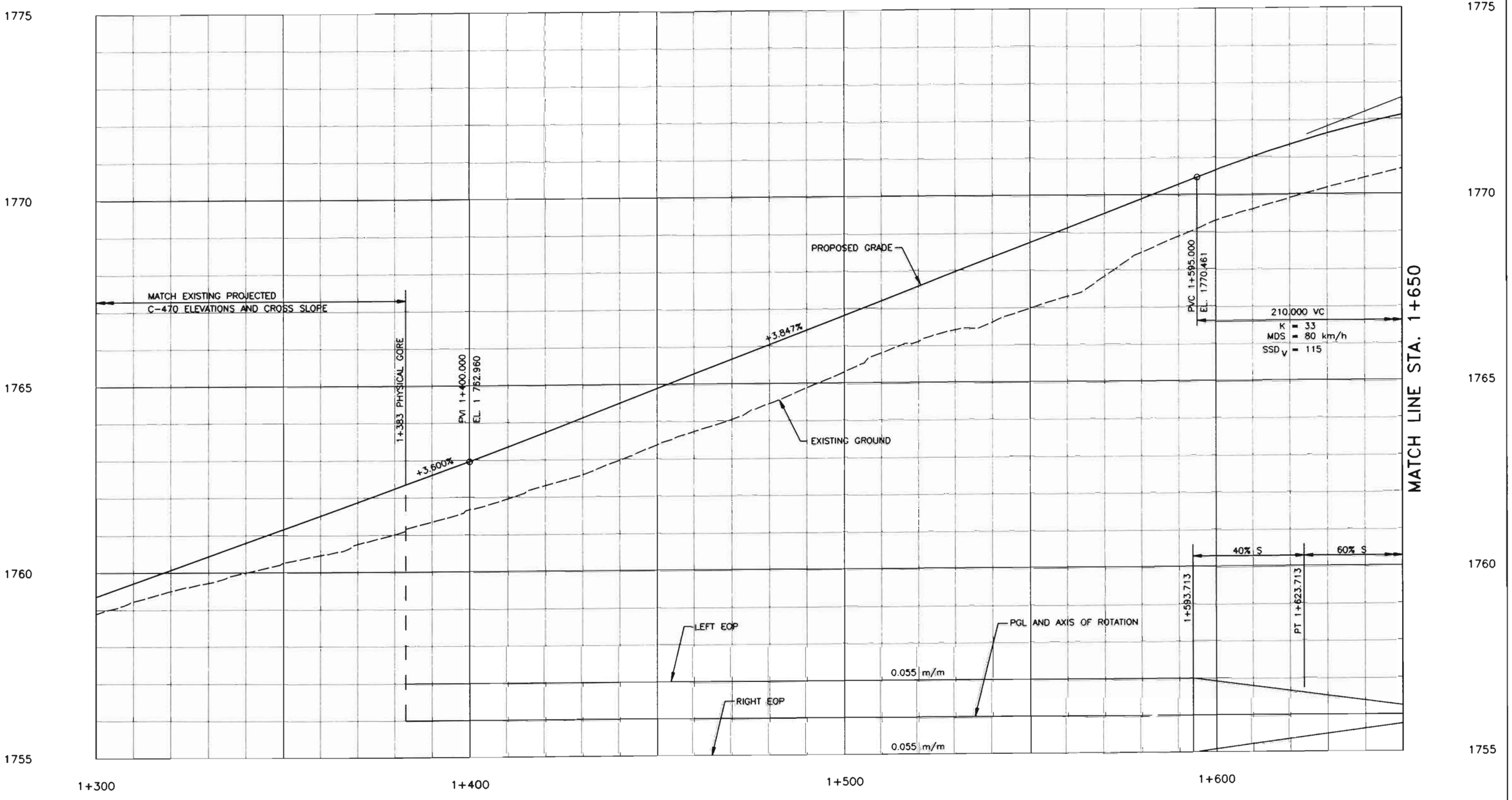

NOTE: WHOLE NUMBERS INDICATE MILLIMETERS.
DECIMAL NUMBERS INDICATE METERS.

FELSBURG HOLT & ULLEVIG

C-470/YOSEMITE INTERCHANGE

NORTH RAMP PROFILE
STA. 1+300 TO STA. 1+650

DATE	PROJECT NO.	DESIGNED BY	DRAWN BY	CHECKED BY	SHEET NO.	OF	SHEETS	DRAWING NO.
JAN 96	95-088	CH	SS	DB	1	2		PP-1

AS CONSTRUCTED					
NO REVISIONS 12-3-96	REVISED		VOID		

FEDERAL RD REGION NO.	DIVISION	PROJ. NO.	SHEET NO.	TOTAL SHEETS
VIII	COLORADO	CC 4701-082	74	154

REVISIONS		

SCALE 1:500 HORIZONTAL
1:50 VERTICAL

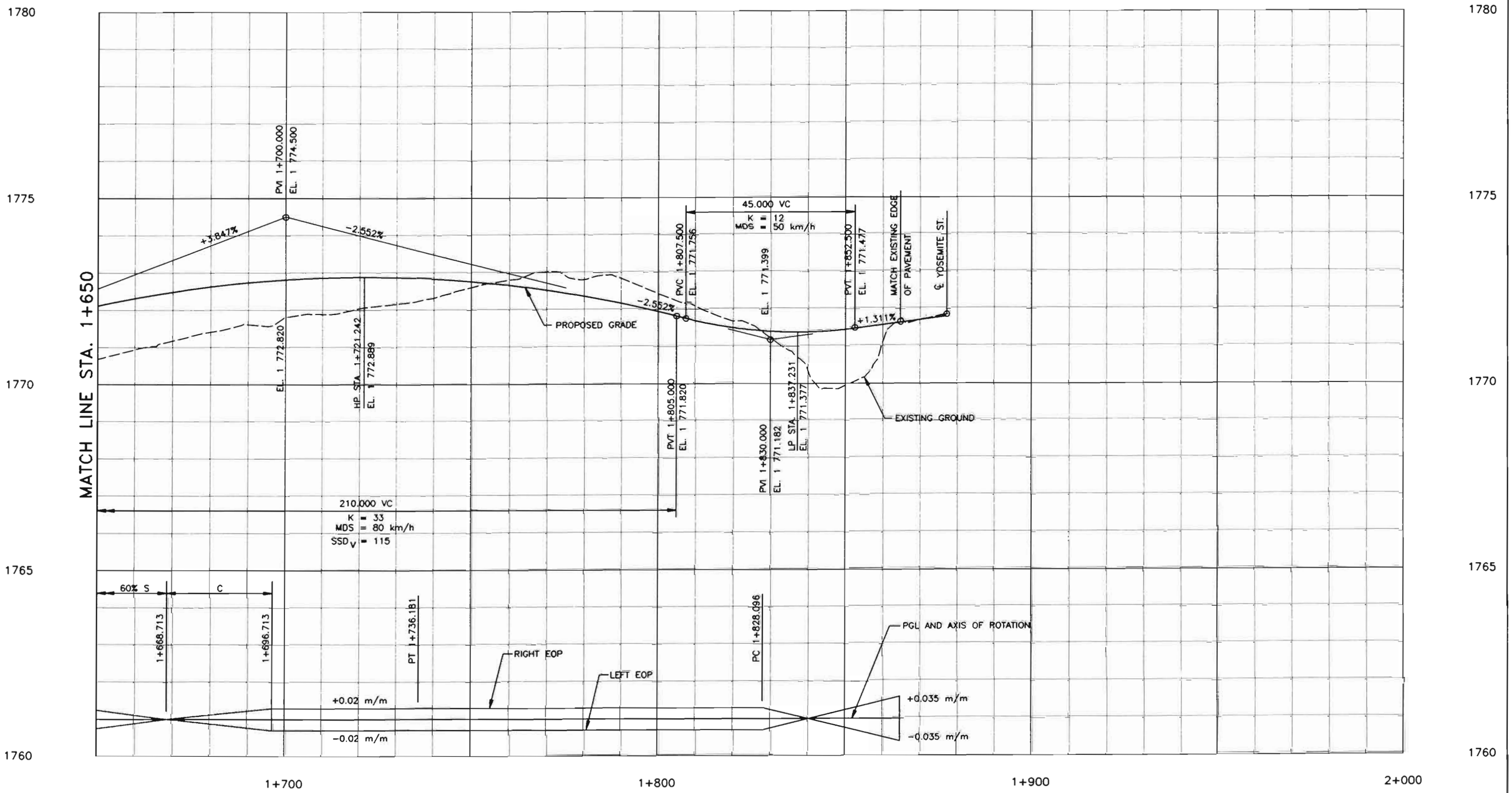

NOTE: WHOLE NUMBERS INDICATE MILLIMETERS.
DECIMAL NUMBERS INDICATE METERS.

FELSBURG HOLT & ULLEVIG

C-470/YOSEMITE INTERCHANGE

NORTH RAMP PROFILE
STA. 1+650 TO STA. 1+878.735

DATE	PROJECT NO.	DESIGNED BY	DRAWN BY	CHECKED BY	SHEET NO.	OF	SHEETS	DRAWING NO.
JAN 96	95-088	CH	SS	DB	2	2		PP-2

AS CONSTRUCTED					
NO REVISIONS 12-3-96	REVISED		VOID		

FEDERAL RD REGION NO.	DIVISION	PROJ. NO.	SHEET NO.	TOTAL SHEETS
VIII	COLORADO	CC 4701-082	75	154

REVISIONS		

SCALE 1:500 HORIZONTAL
1:50 VERTICAL

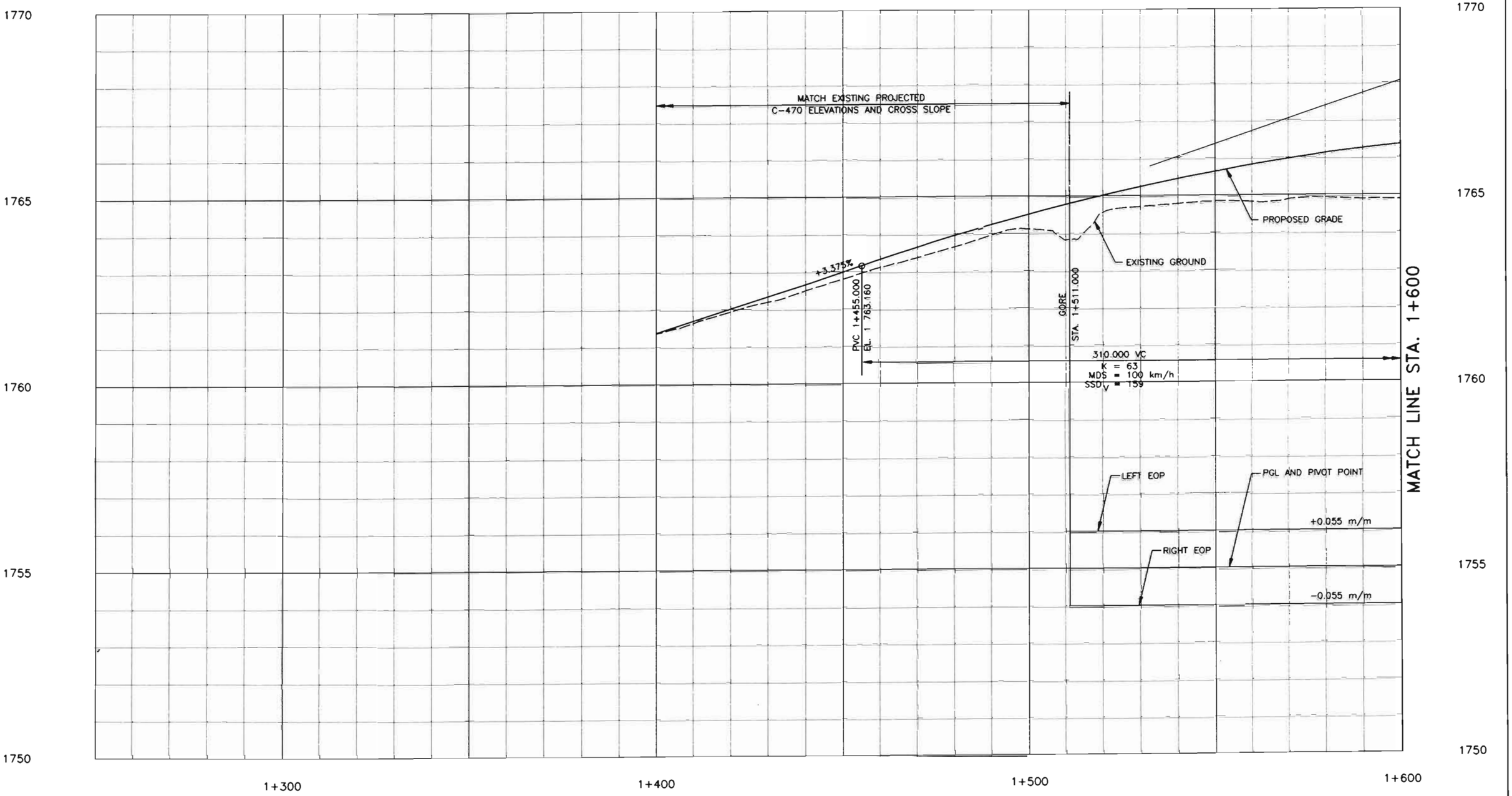

NOTE: WHOLE NUMBERS INDICATE MILLIMETERS.
DECIMAL NUMBERS INDICATE METERS.

FELSBURG HOLT & ULLEVIG

C-470/YOSEMITE INTERCHANGE
SOUTH RAMP PROFILE
STA. 1+400 TO STA. 1+600

DATE	PROJECT NO.	DESIGNED BY CH	DRAWN BY SS	CHECKED BY DB	SHEET NO. 1 OF 2 SHEETS	DRAWING NO. PP-3
JAN 96	95-088					

AS CONSTRUCTED				
NO REVISIONS 1-3-96	REVISED	VOID		

FEDERAL RD REGION NO.	DIVISION	PROJ. NO.	SHEET NO.	TOTAL SHEETS
VIII	COLORADO	CC 4701-082	76	154

REVISIONS		

SCALE 1:500 HORIZONTAL
1:50 VERTICAL

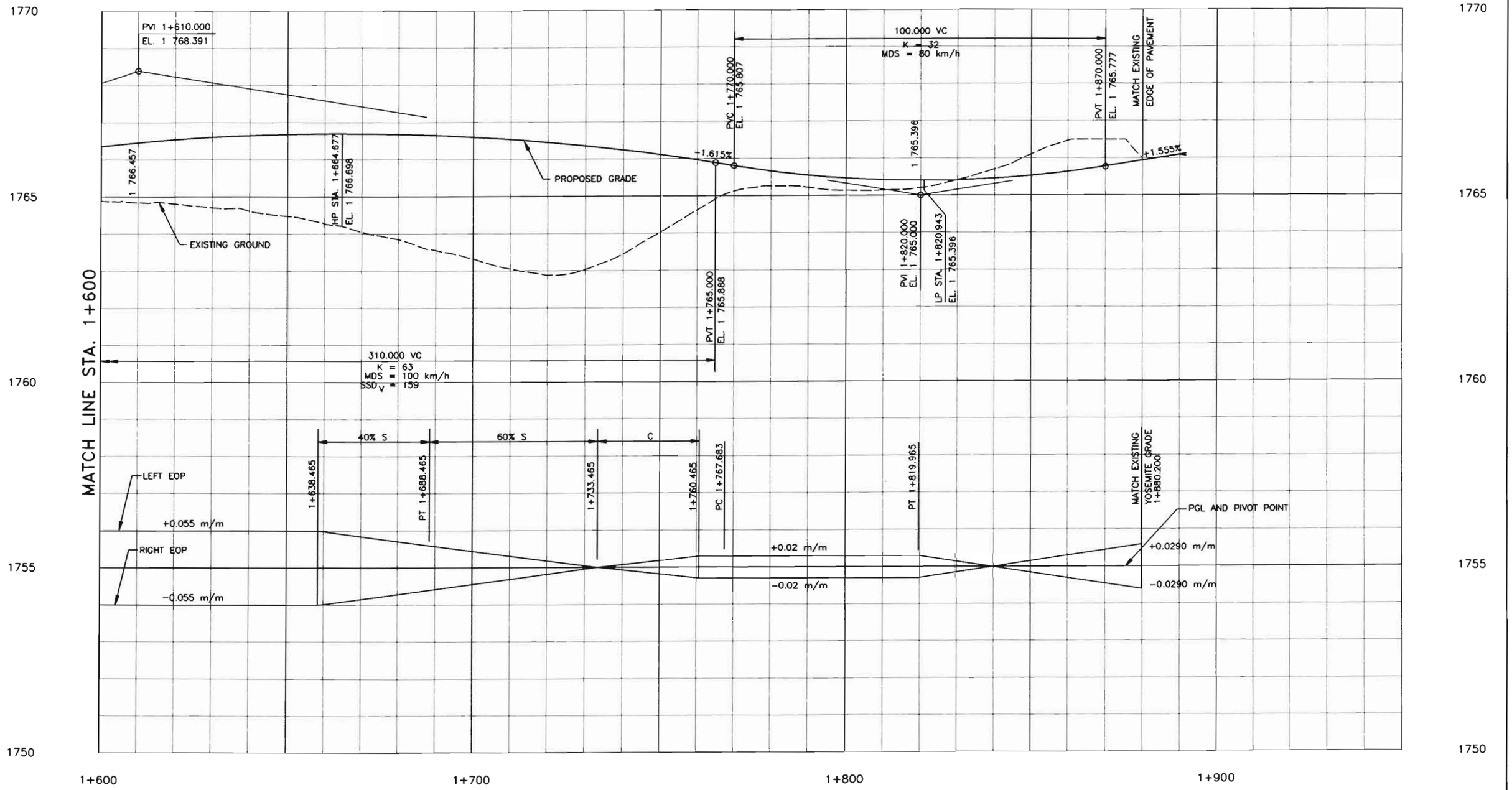

NOTE: WHOLE NUMBERS INDICATE MILLIMETERS.
DECIMAL NUMBERS INDICATE METERS.

FELSBURG HOLT & ULLEVIG

C-470/YOSEMITE INTERCHANGE

SOUTH RAMP PROFILE
STA. 1+600 TO STA. 1+900

DATE	PROJECT NO.	DESIGNED BY CH	SHEET NO. 2	DRAWING NO.
JAN 96	95-088	DRAWN BY SS	OF 2 SHEETS	PP-4
		CHECKED BY DB		

AS CONSTRUCTED			
NO REVISIONS 12-3-96	REVISED	VOID	

FEDERAL RD REGION NO.	DIVISION	PROJ. NO.	SHEET NO.	TOTAL SHEETS
VIII	COLORADO	CC 4701-082	77	154

REVISIONS		

SCALE 1:500 HORIZONTAL
1:50 VERTICAL

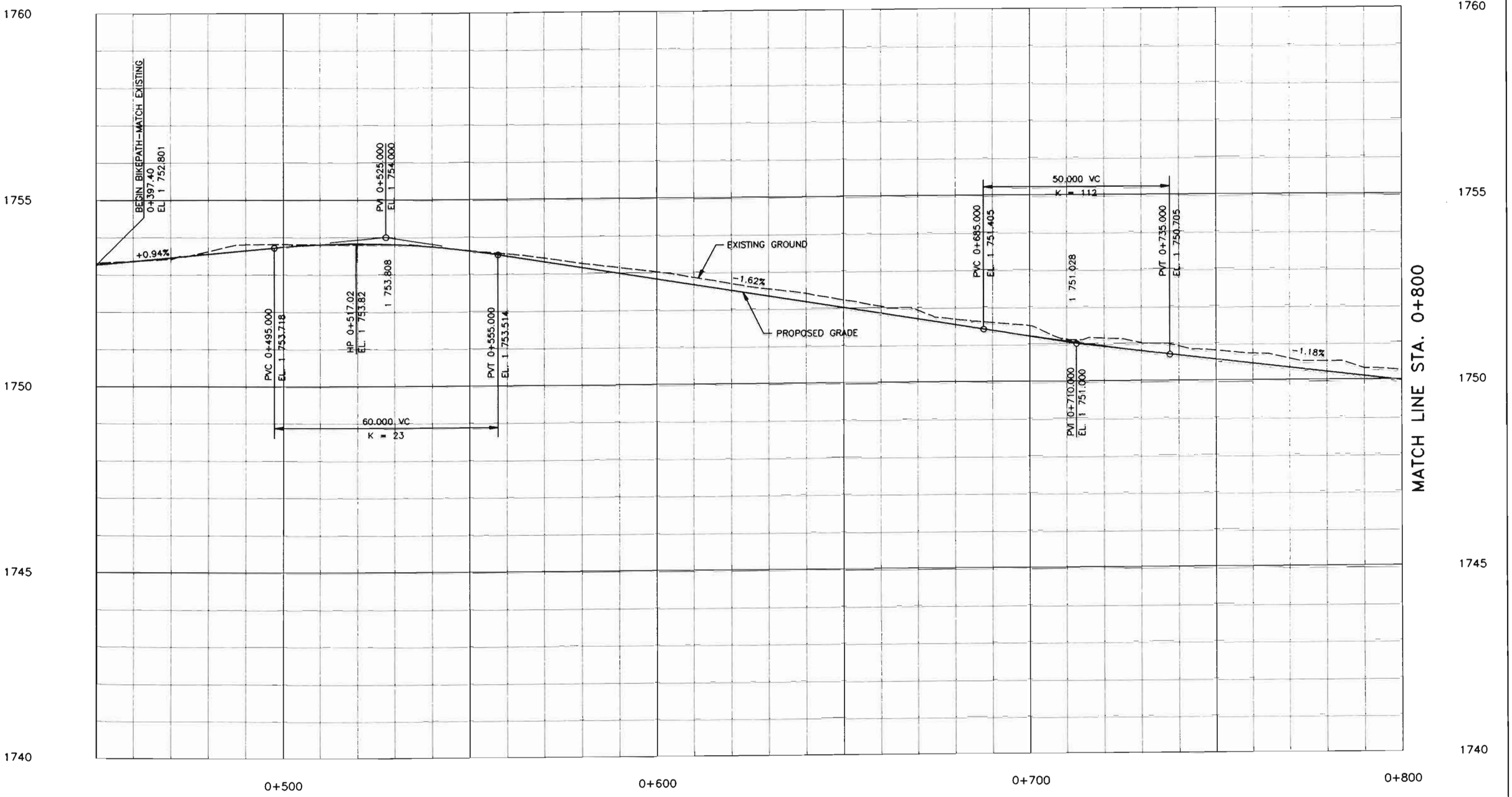

NOTE: WHOLE NUMBERS INDICATE MILLIMETERS.
DECIMAL NUMBERS INDICATE METERS.

FELSBURG HOLT & ULLEVIG

C-470/YOSEMITE INTERCHANGE

BIKEPATH PROFILE
STA. 0+450 TO STA. 0+800

DATE	PROJECT NO.	DESIGNED BY	DRAWN BY	CHECKED BY	SHEET NO.	OF SHEETS	DRAWING NO.
JAN 96	95-088	CH	SS	DB	1	2	PP-5

AS CONSTRUCTED					
NO REVISIONS 12-3-96	REVISED		VOID		

FEDERAL RD REGION NO.	DIVISION	PROJ. NO.	SHEET NO.	TOTAL SHEETS
VIII	COLORADO	CC 4701-082	78	154

REVISIONS		

SCALE 1:500 HORIZONTAL
1:50 VERTICAL

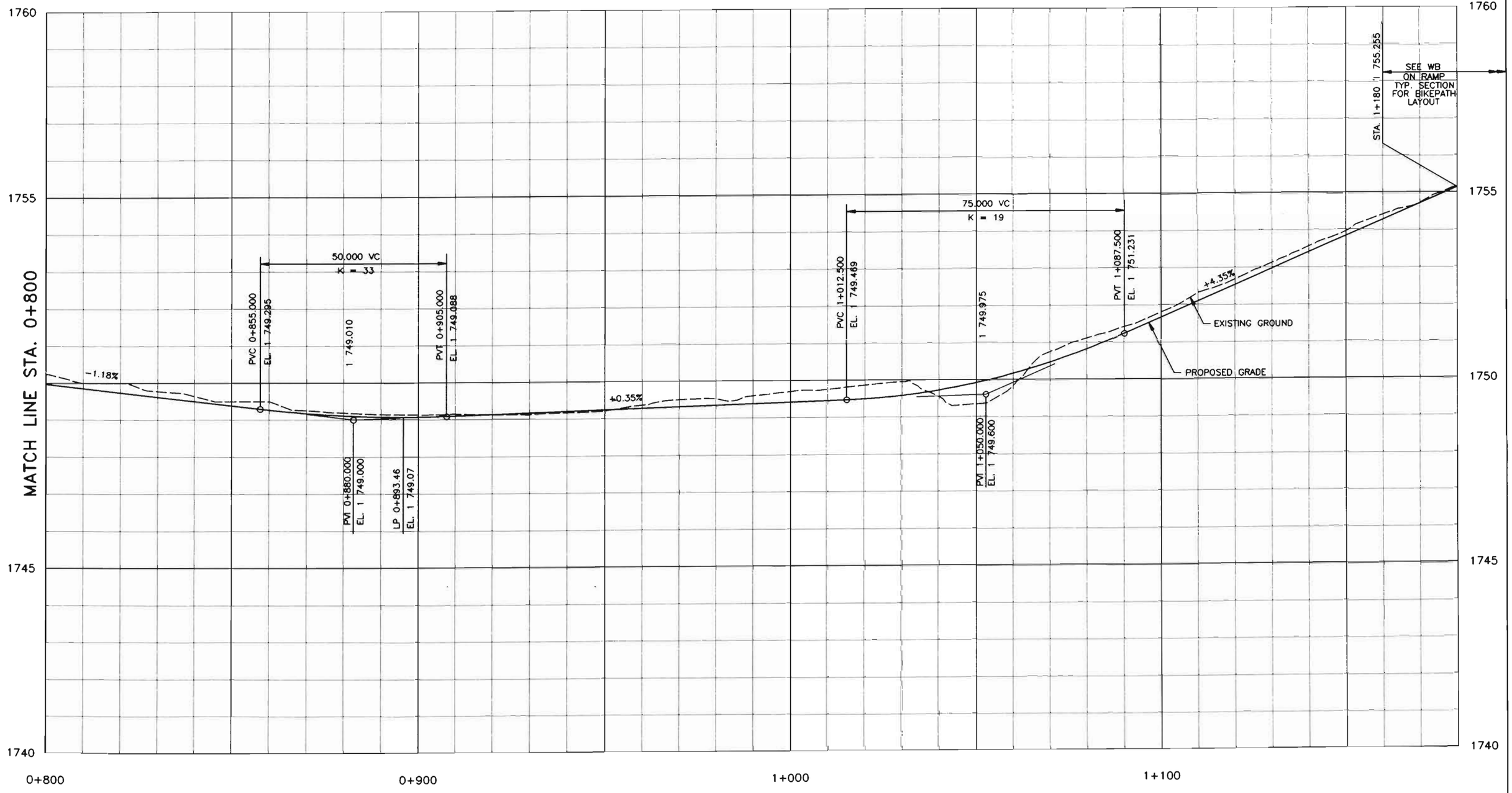

NOTE: WHOLE NUMBERS INDICATE MILLIMETERS.
DECIMAL NUMBERS INDICATE METERS.

FELSBURG HOLT & ULLEVIG

C-470/YOSEMITE INTERCHANGE

BIKEPATH PROFILE
STA. 0+800 TO STA. 1+180

DATE	PROJECT NO.	DESIGNED BY	DRAWN BY	CHECKED BY	SHEET NO.	OF SHEETS	DRAWING NO.
JAN 96	95-088	CH	SS	DB	2	2	PP-6

AS CONSTRUCTED					
NO REVISIONS 12-3-96	REVISED		VOID		

FEDERAL RD REGION NO	DIVISION	PROJ. NO	SHEET NO.	TOTAL SHEETS
VIII	COLORADO	CC 4701-082	79	154

REVISIONS		

SCALE 1:500 HORIZONTAL
1:50 VERTICAL

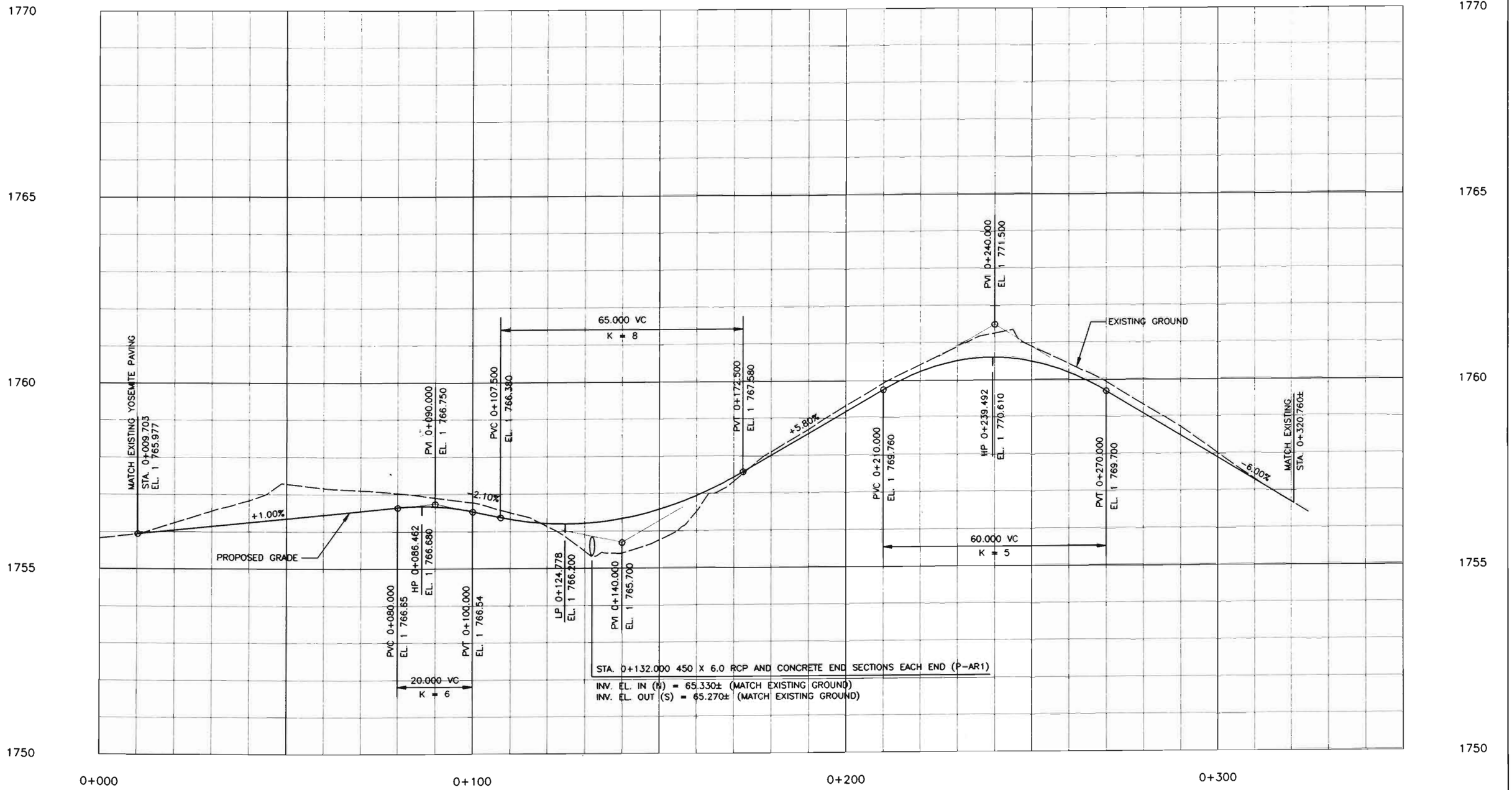

NOTE: WHOLE NUMBERS INDICATE MILLIMETERS.
DECIMAL NUMBERS INDICATE METERS.

FELSBURG HOLT & ULLEVIG

C-470/YOSEMITE INTERCHANGE

ACCESS ROAD PROFILE
STA. 0+000 TO STA. 0+320.76

DATE	PROJECT NO.	DESIGNED BY DB	DRAWN BY SS	CHECKED BY DB	SHEET NO. 1 OF 1 SHEETS	DRAWING NO. PP-7
JAN 96	95-088					

AS CONSTRUCTED			
NO REVISIONS ☐	REVISED 11-3-96	VOID ☐	

FEDERAL RD REGION NO	DIVISION	PROJ. NO.	SHEET NO.	TOTAL SHEETS
VIII	COLORADO	CC 4701-082	80	154

REVISIONS		

LEGEND

EXISTING CONTOURS

PROPOSED CONTOURS

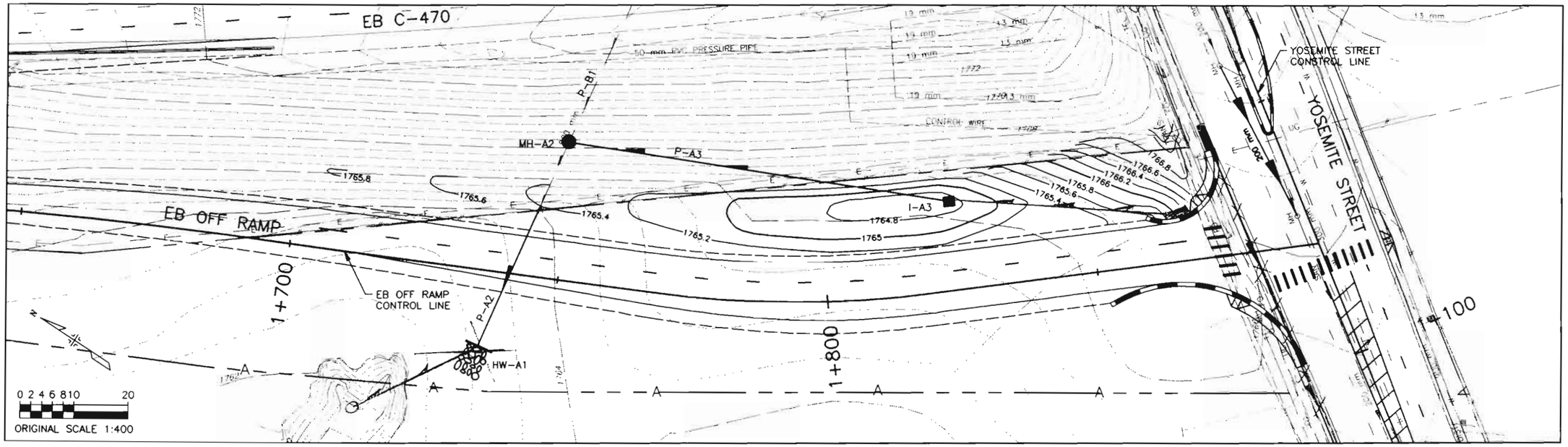

GRADING PLAN

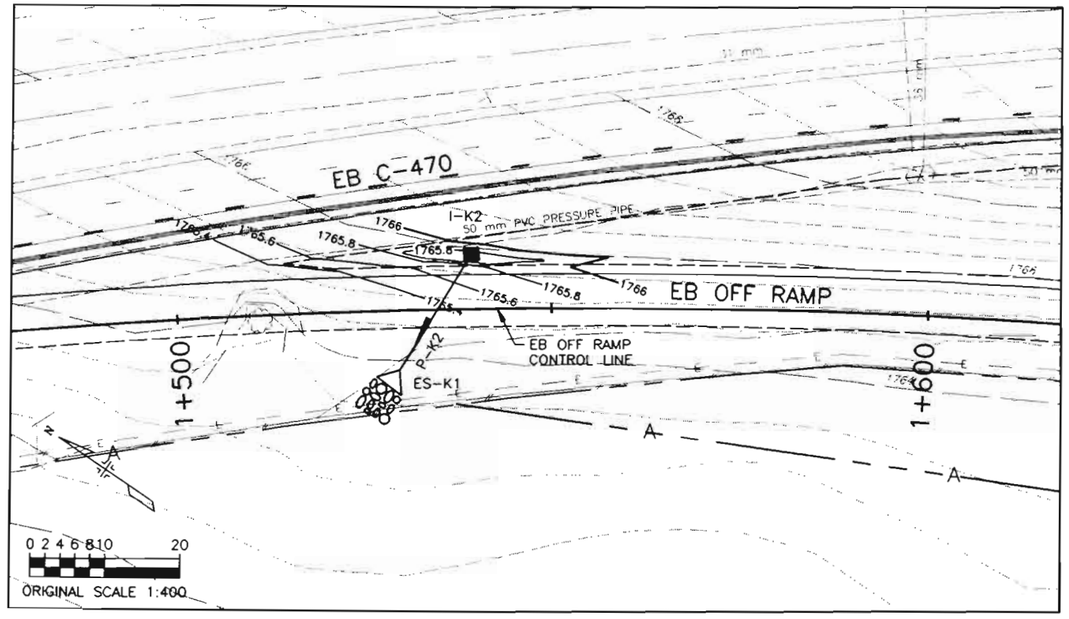

GRADING PLAN

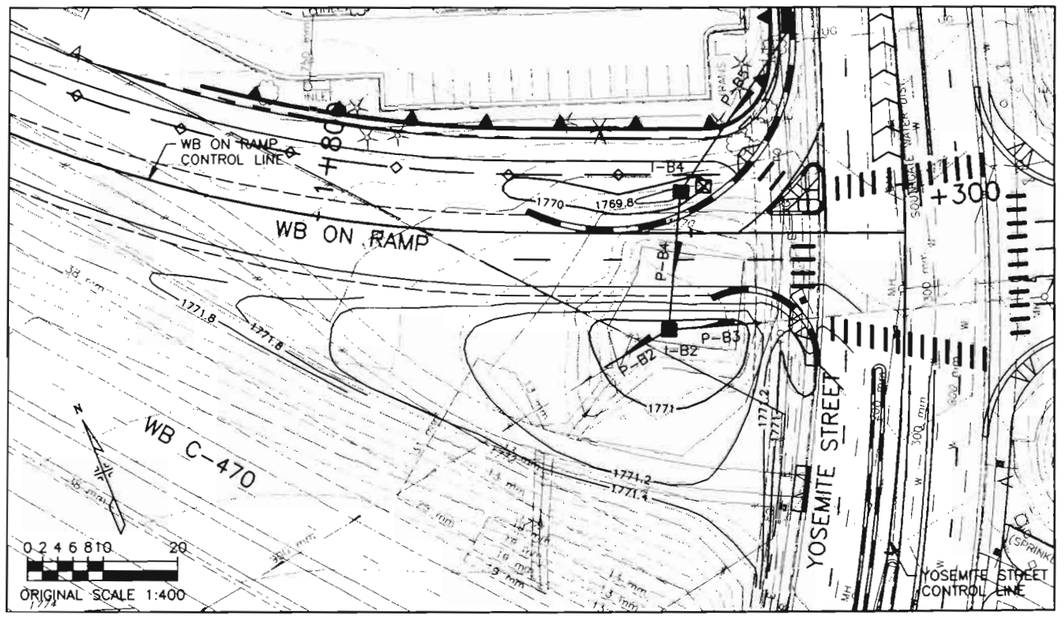

GRADING PLAN

NOTES:

1. PROPOSED CONTOURS ARE TO FINISHED GRADE.
2. PROPOSED CONTOURS SHALL TRANSITION SMOOTHLY TO INLETS AND SHOULDERS.

FELSBURG HOLT & ULLEVIG

C-470/YOSEMITE INTERCHANGE

GRADING DETAILS

DATE	PROJECT NO.	DESIGNED BY	DRAWN BY	CHECKED BY	SHEET NO.	OF SHEETS	DRAWING NO.
FEB 96	95-088	EI	SD	DB	1	1	GD-1

AS CONSTRUCTED					
NO REVISIONS 12-3-96	REVISED		VOID		

FEDERAL RD REGION NO.	DIVISION	PROJ. NO.	SHEET NO.	TOTAL SHEETS
VIII	COLORADO	CC 4701-082	81	154

REVISIONS		

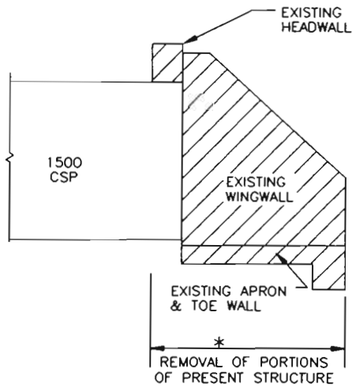

* ITEM REMOVAL OF PORTIONS OF PRESENT STRUCTURE INCLUDES REMOVAL OF HEADWALL, WINGWALLS, APRON AND TOEWALL, FOR STRUCTURE AS INDICATED ON THE PLANS AND SHOWN ABOVE.

REMOVAL DETAIL

NOT TO SCALE

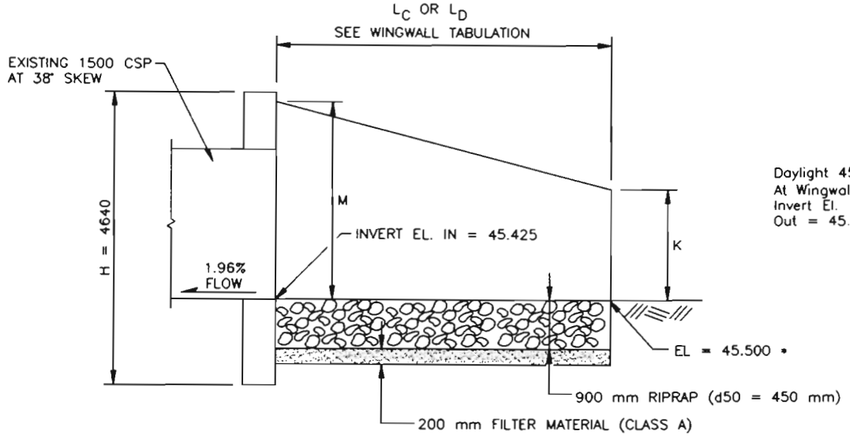

• APPROX. ELEVATION. MATCH EXISTING GROUND.

HEADWALL & WINGWALL PROFILE

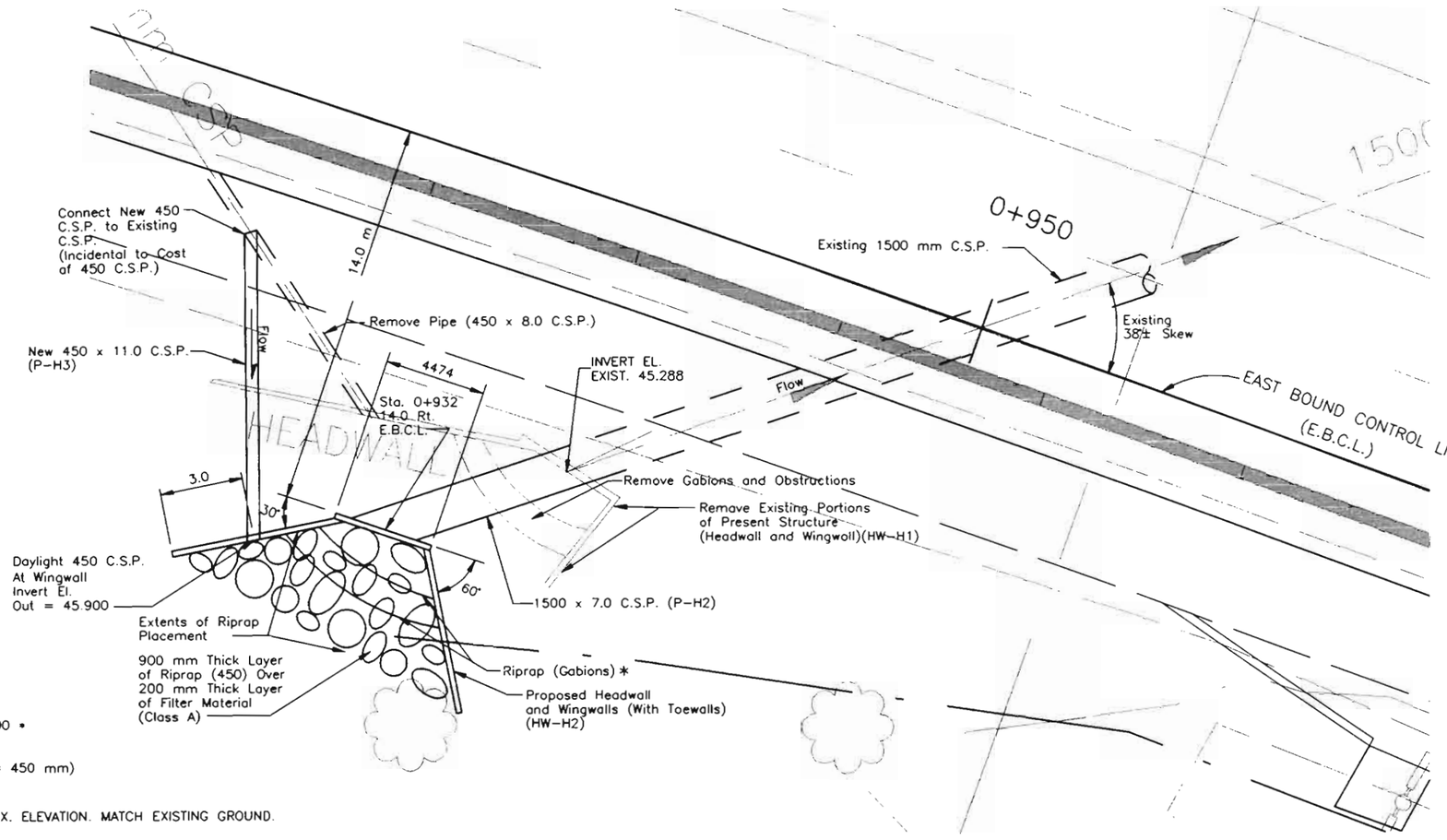

HEADWALL & WINGWALL PLAN

* RIPRAP (GABIONS) SHALL BE PLACED IN THE NEW LOCATION TO COMPLIMENT THAT CURRENLY IN PLACE. THE CONTRACTOR IS ADVISED TO INVESTIGATE GABIONS IN PLACE PRIOR TO REMOVAL.

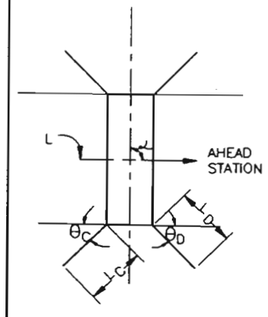

WINGWALL TABULATION

NUMBER	STATION	CSP SIZE	SKEW ∠	θ_C	θ_D	L_C	L_D	M	K
HW-H1	0+932,14.0 RT.	1500	38°±	30°	60°	6.0	6.0	1900	1219

SEE STANDARD PLANS M & S STANDARDS M-601-10 AND M-601-20 FOR DETAILS.

NOTE

WHOLE NUMBERS INDICATE MILLIMETERS
DECIMAL NUMBERS INDICATE METERS

FELSBURG HOLT & ULLEVIG

C-470/YOSEMITE INTERCHANGE

DRAINAGE DETAILS

DATE	PROJECT NO.	DESIGNED BY	DRAWN BY	CHECKED BY	SHEET NO.	OF SHEETS	DRAWING NO.
FEB 96	95-088	EL	DS	DB	1	1	DD-1

AS CONSTRUCTED					
NO REVISIONS 12-3-96	REVISED		VOID		

FEDERAL RD REGION NO.	DIVISION	PROJ. NO.	SHEET NO.	TOTAL SHEETS
VIII	COLORADO	CC 4701-082	82	154

REVISIONS		

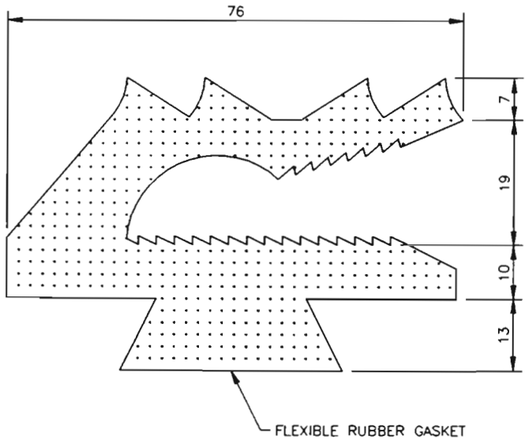

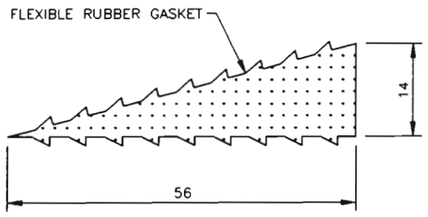

DD2/A DETAIL–FLEXIBLE WEDGE TYPE GASKET
NO SCALE

NOTE:

1. ALL MATERIAL SPECIFICATIONS AND INSTALLATION REQUIREMENTS SHALL BE IN ACCORDANCE WITH THE STANDARD SPECIFICATIONS APPLICABLE TO THE PROJECT.

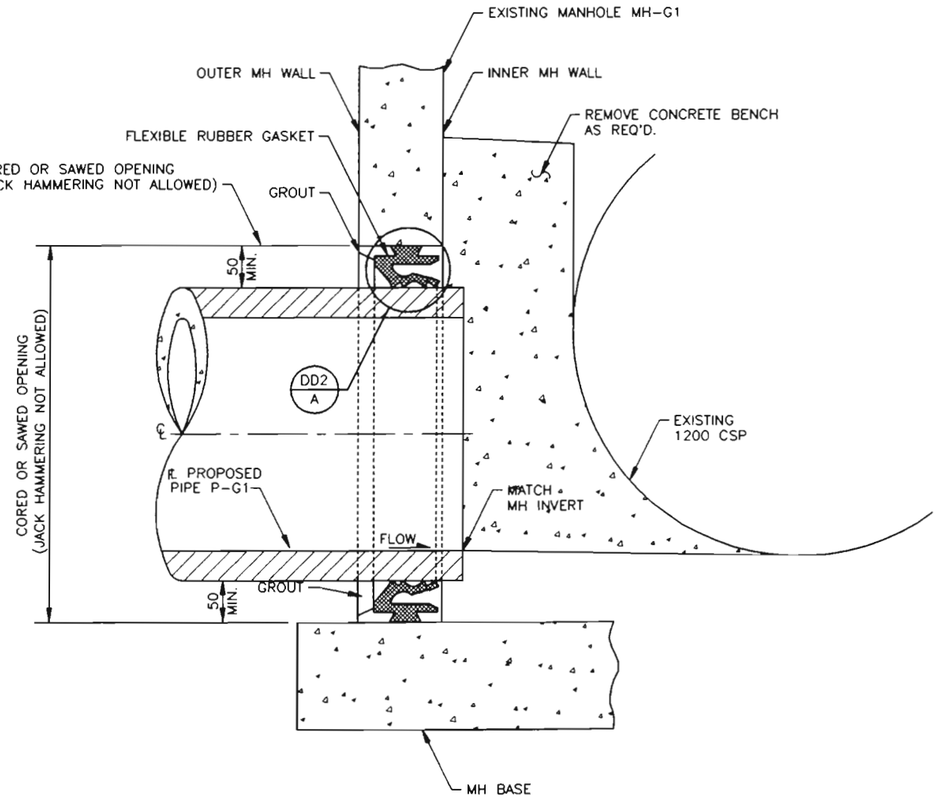

MODIFY MANHOLE DETAIL FOR MH-G1

FELSBURG HOLT & ULLEVIG

C-470/YOSEMITE INTERCHANGE

DRAINAGE DETAILS

DATE	PROJECT NO.	DESIGNED BY FL	SHEET NO. 1	DRAWING NO.
JAN 96	95-088	DRAWN BY SD CHECKED BY DB	OF 1 SHEETS	DD-2

AS CONSTRUCTED				
NO REVISIONS ☐	REVISED 12-3-96	VOID ☐		

FEDERAL RD REGION NO.	DIVISION	PROJ. NO.	SHEET NO.	TOTAL SHEETS
VIII	COLORADO	CC 4701-082	83	154

REVISIONS		

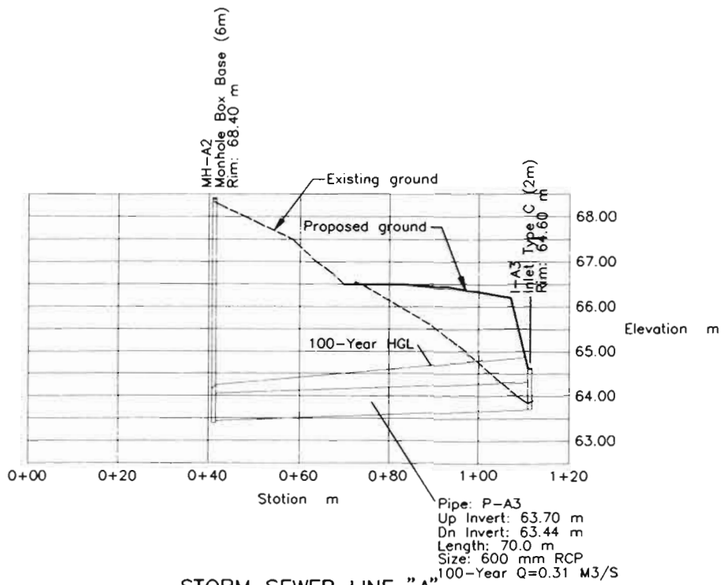

STORM SEWER LINE "A"

1+748.5, 25.5 LT TO 1+825, 16.5 EBCL

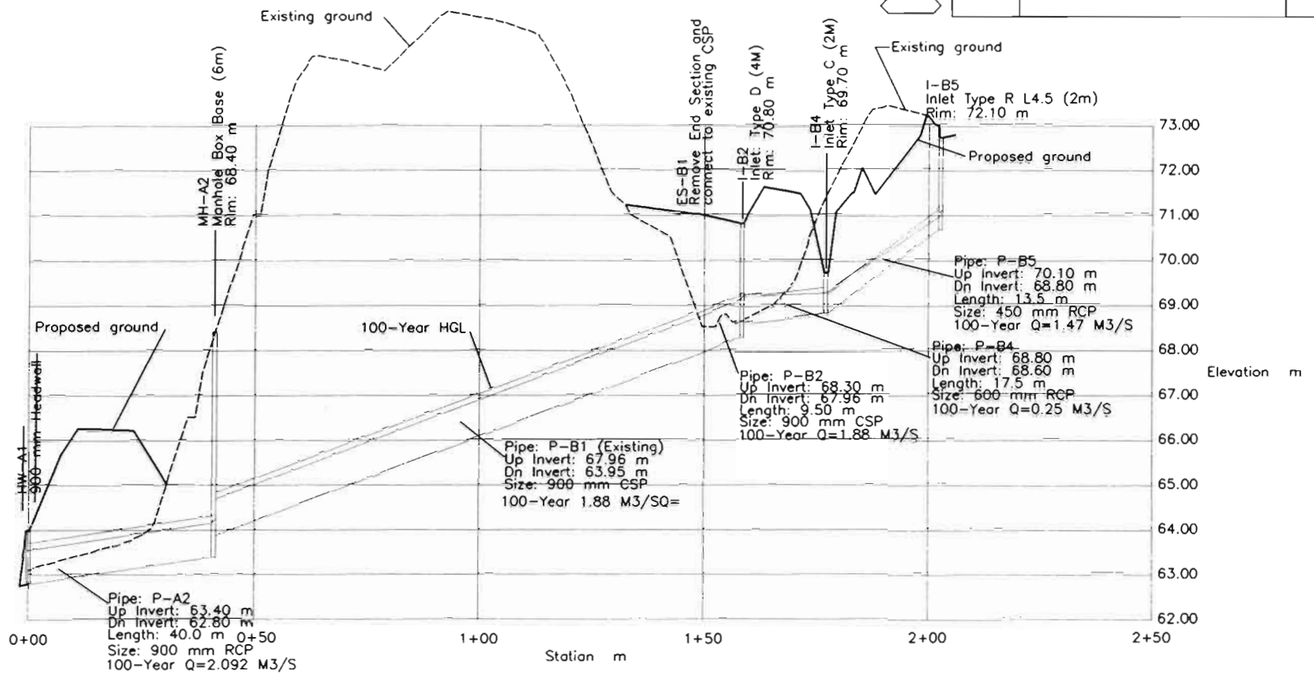

STORM SEWER LINE "A-B"

STA. 1+737, 15.0 RT. WBCL TO STA. 1+321.430, 18.139 LT. YOSEMITE STREET

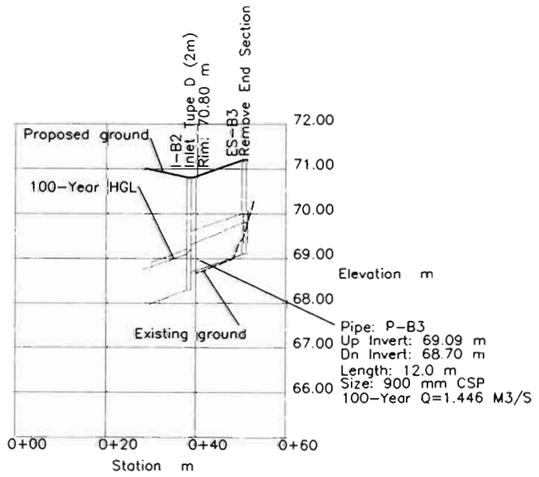

STORM SEWER LINE "B"

STA. 1+847, 13.0 TO 1+859.5, 12.0 RT.

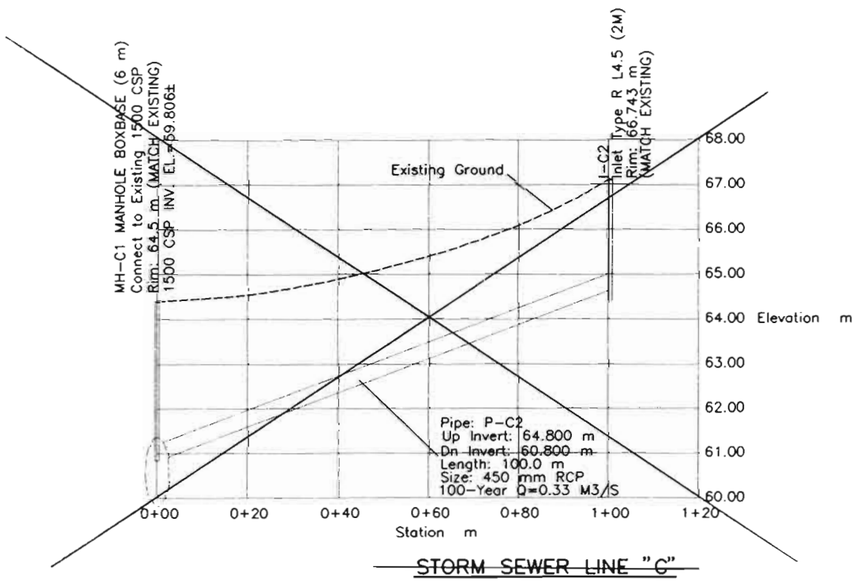

~~STORM SEWER LINE "C"~~

~~YOSEMITE STREET STA. 1+046, 11.5 LT. TO 1+146.611, 11.863 LT.~~

STORM SEWER PROFILES

NOTE: WHOLE NUMBERS INDICATE MILLIMETERS
DECIMAL NUMBERS INDICATE METERS

FELSBURG HOLT & ULLEVIG

C-470/YOSEMITE INTERCHANGE

STORM SEWER PROFILES

DATE	PROJECT NO.	DESIGNED BY EL	SHEET NO. 1	DRAWING NO.
FEB 96	95-088	DRAWN BY SS	OF 2 SHEETS	SP-1
		CHECKED BY DB		

AS CONSTRUCTED					
NO REVISIONS 12-3-96	REVISED		VOID		

FEDERAL RD REGION NO.	DIVISION	PROJ. NO.	SHEET NO.	TOTAL SHEETS
VIII	COLORADO	CC 4701-082	84	154

REVISIONS		

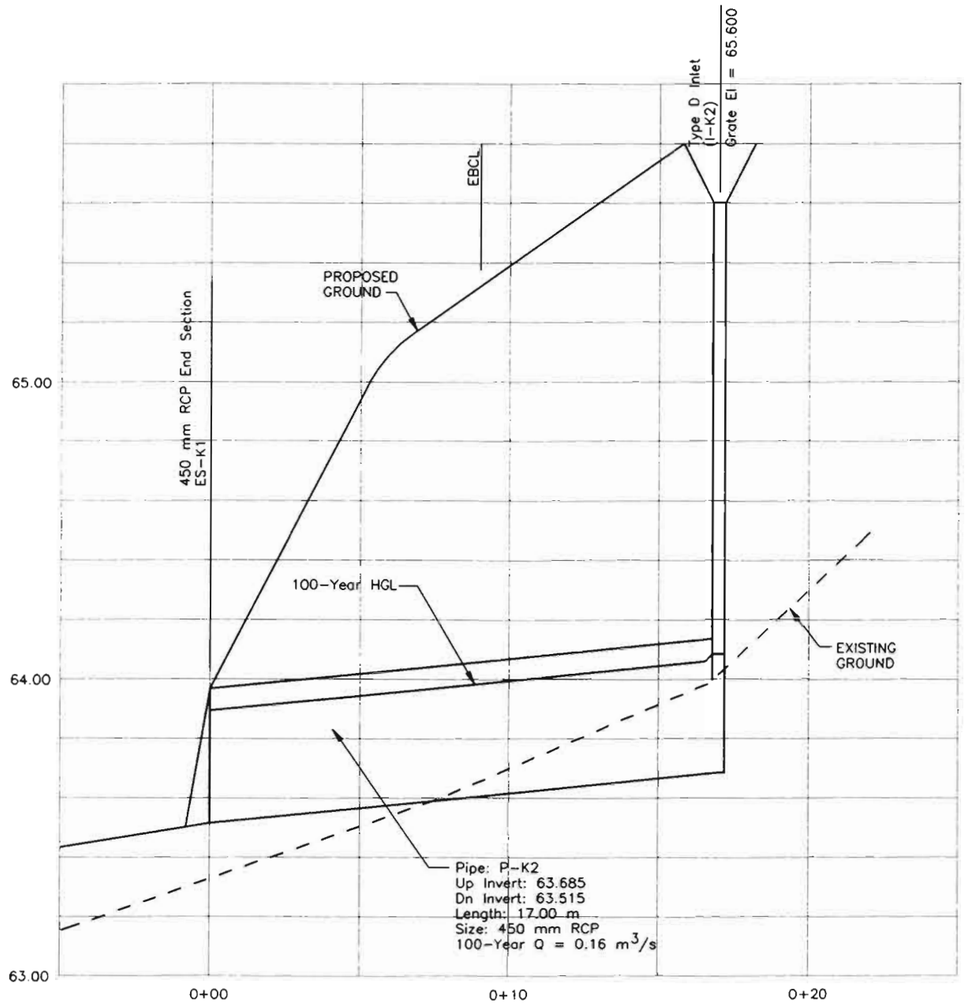

STORM SEWER LINE "K"

FROM STA. 1+529 RT. TO STA. 1+539.5 LT.

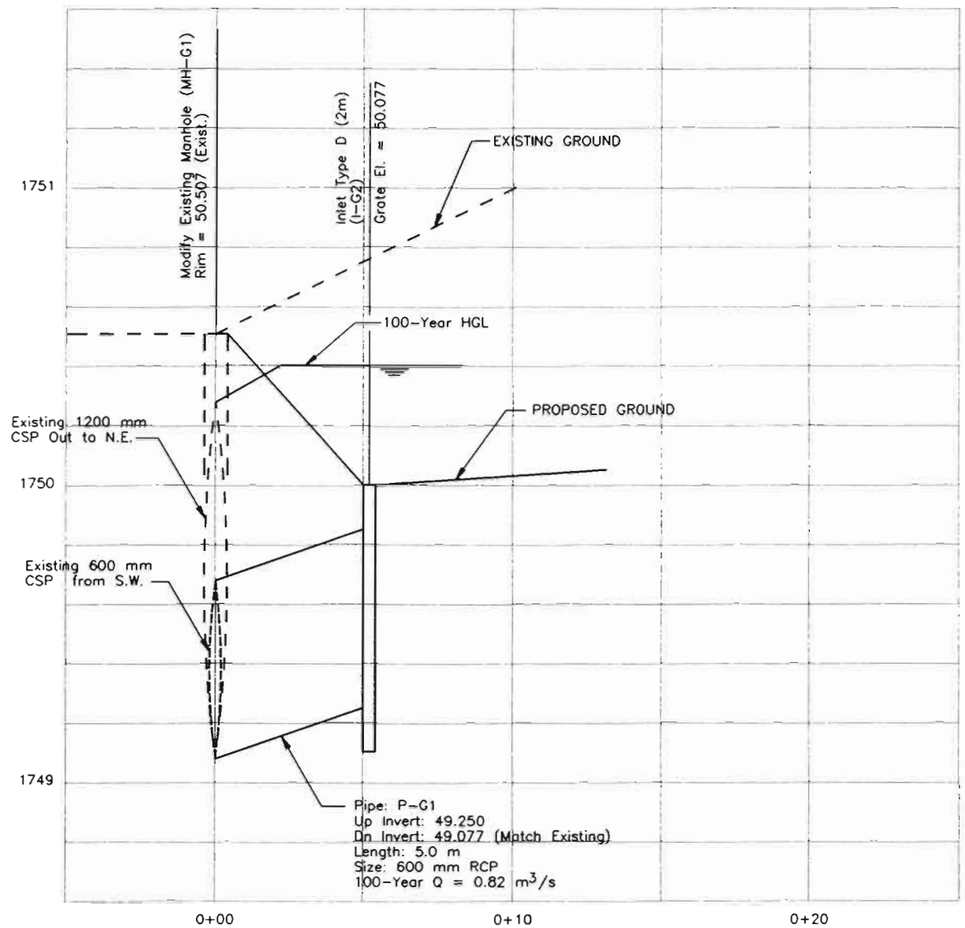

STORM SEWER LINE "G"

FROM STA. 0+667 TO 0+674 RT. EBCL

STORM SEWER PROFILES

NOTE: WHOLE NUMBERS INDICATE MILLIMETERS
DECIMAL NUMBERS INDICATE METERS

FELSBURG HOLT & ULLEVIG

C-470/YOSEMITE INTERCHANGE

STORM SEWER PROFILES

DATE	PROJECT NO.	DESIGNED BY EL DRAWN BY DS CHECKED BY DB	SHEET NO. 2 OF 2 SHEETS	DRAWING NO. SP-2
FEB 96	95-088			

STORMWATER MANAGEMENT PLAN – ADDITIONAL INFORMATION

Estimated Runoff coefficient (5–yr.)
Pre–construction: 0.09 Post–construction: 0.13

Existing data describing soil or quality of discharge: EMBANKMENT FILLS, CLAY LOAMS
AVERAGE EXISTING VEGETATIVE GROUND COVER IS 75%

Existing vegetation: 100% NATIVE GRASSES AND WEEDS

Proposed sequence for major activities, location of any other potential pollution source, areas used for storage of building materials, soils or wastes, and location of any dedicated asphalt or concrete batch plants: see water quality and erosion control specifications, and documents submitted by the contractor at the preconstruction conference.

100–year Flood plain boundaries: see bridge hydraulic information sheet (if existent).

Description of the construction activity, estimate of the total site area and of the area expected to undergo excavation, and name of the receiving water: see CDPS stormwater permit application.

Site map and construction site boundaries: see title sheet

Areas of cuts and fills and areas of soil disturbance: see plan and profile sheets and roadway cross sections.

Surface waters: see title sheet and bridge hydraulic information sheet (if existent)

Materials handling and spill prevention: see water quality specification (107.25).

Inspection and maintenance: see erosion control specifications (107.25 or 208).

Contract Document location of erosion control and stormwater quality management measures not referenced above nor included on the Stormwater Management Plan Sheet(s):

SEEDING NOTES

NATIVE SEEDING

Soil preparation, fertilizer, topsoil, seeding, mulching and mulch tackifier will be required for an estimated 3.517 hectores of disturbed area within the right–of–way limits which are not surfaced.
The following types and rates shall be used:

COMMON NAME	BOTANICAL NAME	kgs PLS/hectare
Blue grama v. Hochita	Bouteloua gracilis	1.1
Streambank wheatgrass v. Sodar	Elymus lanceolatus	5.6
Western wheatgrass v. Arriba	Pascopyrum smithii	7.8
Little bluestem v. Pastura	Schizochyrium scoparium	2.2
Sideoats grama v. Vaughn	Bouteloua curtipendula	1.1
Blonket flower	Gaillardia aristata	1.1
Blue flax	Linum perenne	0.6
Prairie coneflower	Ratibida columnifera	0.3
TOTAL		19.8

SEEDING APPLICATION: Drill seed 6.25 mm – 12.5 mm into topsoil.

MULCH REQUIREMENT AND APPLICATION: 3.4 m tons native hay per hectare mechanically crimped into topsoil in combination with a mulch tackifier per special provision 213 – Mulch Tockifier.

COMMERCIAL FERTILIZER	ANALYSIS (%)	KGS/HECTARE AVAILABLE
Nitrogen	18	50
Phosphorus	46	128
Potassium	0	

Placement of topsoil, seeding, and mulching will not be done in a single operation, but shall be completed as the work progresses. It is estimated that several mobilizations for topsoil, seeding, and mulching will be required and shall be included in the price of the work.

AS CONSTRUCTED
NO REVISIONS ☐ REVISED 12-7-95 VOID ☐

FEDERAL RD REGION NO.	DIVISION	PROJ. NO.	SHEET NO.	TOTAL SHEETS
VIII	COLORADO	CC 4701–082	85	

REVISIONS		

SUMMARY TABULATION OF EROSION CONTROL ITEMS

LOCATION	DIRECTION	SEEDING (NATIVE) HA	TOPSOIL * M^3	MULCHING HA	MULCH TACKIFIER KG	EROSION BALES EACH	SILT FENCE M	SEDIMENT REMOVAL & DISPOSAL LS	STORM DRAIN INLET PROTECTION EACH	RIPRAP LINED SWALE: RIPRAP (300 mm)	RIPRAP LINED SWALE: FILTER MATERIAL CLASS A
0+092 TO 0+220 WBCL	LEFT	0.081	85	0.081	9						
0+220 TO 0+570 WBCL/WBOR	LEFT	0.333	350	0.333	37						
0+317 TO 0+565 EBCL	RIGHT	0.167	175	0.167	18						
0+570 TO 0+930 WBOR	LEFT	0.405	426	0.405	45	SEE TABULATION ON NEXT SHEET	SEE TABULATION ON NEXT SHEET		SEE TABULATION ON NEXT SHEET	SEE TABULATION ON NEXT SHEET	SEE TABULATION ON NEXT SHEET
0+565 TO 0+916 EBCL	RIGHT	0.375	394	0.375	41						
0+930 TO 1+300 WBOR	LEFT	0.385	404	0.385	42						
0+916 TO 1+278 EBCL	RIGHT	0.184	193	0.184	20						
1+300 TO 1+660 WBOR	LEFT	0.431	452	0.431	47						
1+278 TO 1+632 EBCL/EBOR	RIGHT	0.295	310	0.295	32						
1+660 TO 1+854 WBOR	LEFT	0.315	330	0.315	35						
1+632 TO 1+875 EBOR	RIGHT	0.546	574	0.546	60						
TOTALS		3.517	3 723	3.517	386	265	1 845	1	5	22.5	7.5

AN "EROSION CONTROL SUPERVISOR (1–LUMP SUM)" WILL BE REQUIRED ON THIS PROJECT.
(SEE ITEM 208 "EROSION CONTROL" IN THE PROJECT STANDARD SPECIFICATIONS).

* CONTRACTORS SOURCE.

FELSBURG HOLT & ULLEVIG

C–470/YOSEMITE INTERCHANGE
STORMWATER MANAGEMENT PLAN AND TABULATION

DATE	PROJECT NO.	DESIGNED BY / DRAWN BY / CHECKED BY	SHEET NO. X OF X SHEETS	DRAWING NO.
JAN 96	95–088			EC–4

AS CONSTRUCTED				
NO REVISIONS ☐	REVISED 12-3-96	VOID ☐		

FEDERAL RD REGION NO.	DIVISION	PROJ. NO.	SHEET NO.	TOTAL SHEETS
VIII	COLORADO	CC 4701-082	86	134

REVISIONS		

INLET PROTECTION DETAILS

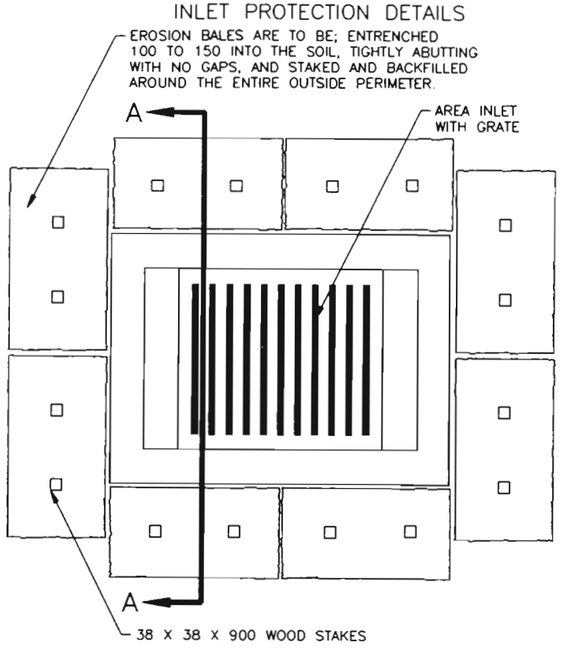

PLAN VIEW

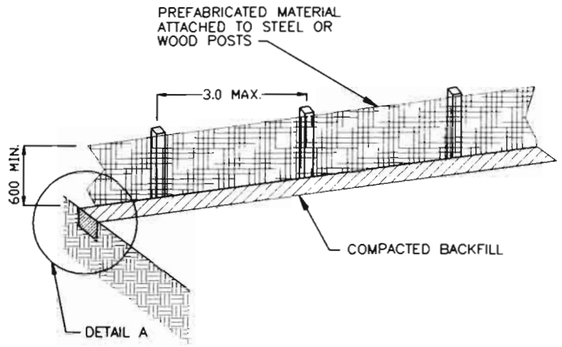

SILT FENCE DETAIL

NOT TO SCALE

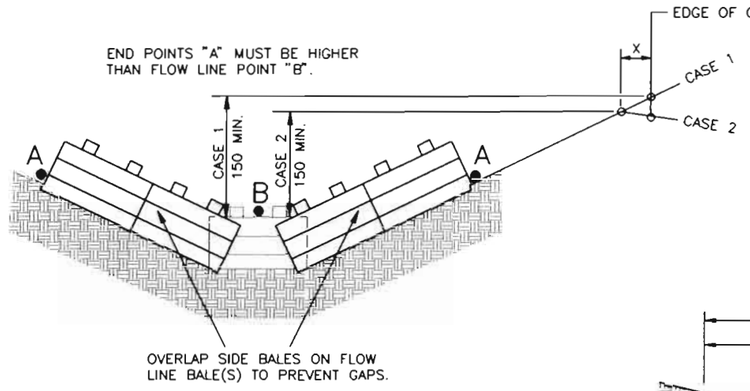

DITCH EROSION BALES

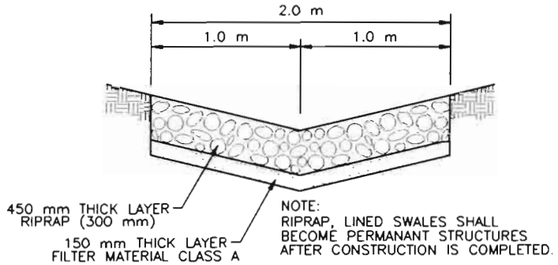

RIPRAP LINED SWALE

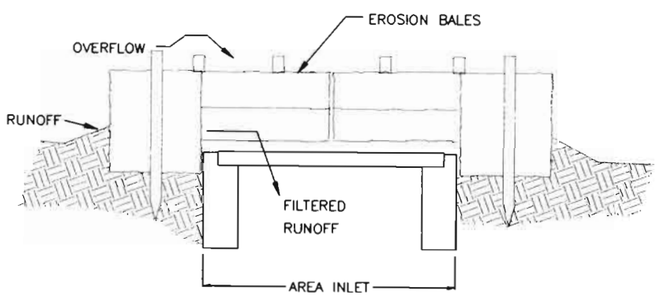

CROSS-SECTION AA

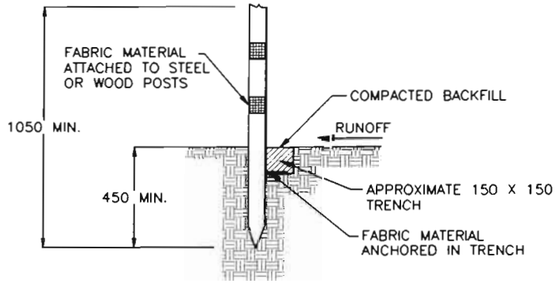

DETAIL A

NOT TO SCALE

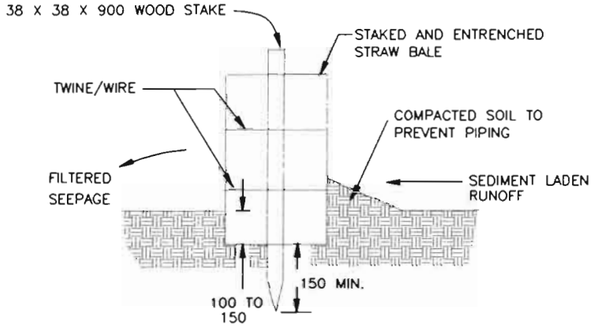

CROSS SECTION OF A PROPERLY INSTALLED STRAW BALE

STORM DRAIN INLET PROTECTION TABULATION *

LOCATION	SIDE	QUANTITY EACH
0+659 EBCL	RT	1
1+540 EBOR	LT	1
1+820 EBOR	LT	1
1+840 WBOR	RT	1
1+850 WBOR	LT	1
TOTAL		5

SILT FENCE TABULATION *

LOCATION	SIDE	QUANTITY M
0+092 TO 0+700 WBCL/WBOR	LT	615
0+317 TO 0+420 EBCL	RT	105
0+700 TO 1+260 WBOR	LT	625
1+300 TO 1+350 EBCL	RT	50
1+450 TO 1+850 EBOR	RT	400
1+053 TO 1+860 EBOR	LT	50
TOTAL		1 845

* FOR INFORMATION ONLY – SEE PREVIOUS PAGE

EROSION BALE TABULATION *

LOCATION	SIDE	QUANTITY EACH
0+450 TO 0+630 EBCL	RT	35
1+100 TO 1+300 WBOR	LT	35
0+700 TO 1+030 EBCL	RT	55
1+300 TO 1+824 WBOR	LT	90
1+570 TO 1+850 EBOR	LT	50
TOTAL		265

RIPRAP LINED SWALE TABULATION *

LOCATION	SIDE	QUANTITY (M3) RIPRAP (300 mm)	QUANTITY (M3) FILTER MATERIAL CLASS A
0+900 EBCL	RT	9.0	3.0
1+340 EBCL	RT	9.0	3.0
1+830 WBCL	RT	4.5	1.5
TOTAL		22.5	7.5

FELSBURG HOLT & ULLEVIG

C-470/YOSEMITE INTERCHANGE

STORMWATER MANAGEMENT PLAN DETAILS

DATE	PROJECT NO.	DESIGNED BY	DRAWN BY	CHECKED BY	SHEET NO.	OF SHEETS	DRAWING NO.
JAN 96	95-088		SS	DR	1	1	EC-5

AS CONSTRUCTED			
NO REVISIONS 12-3-96	REVISED	VOID	

FEDERAL RD REGION NO.	DIVISION	PROJ. NO.	SHEET NO.	TOTAL SHEETS
VIII	COLORADO	CC 4701-082	87	154

REVISIONS		

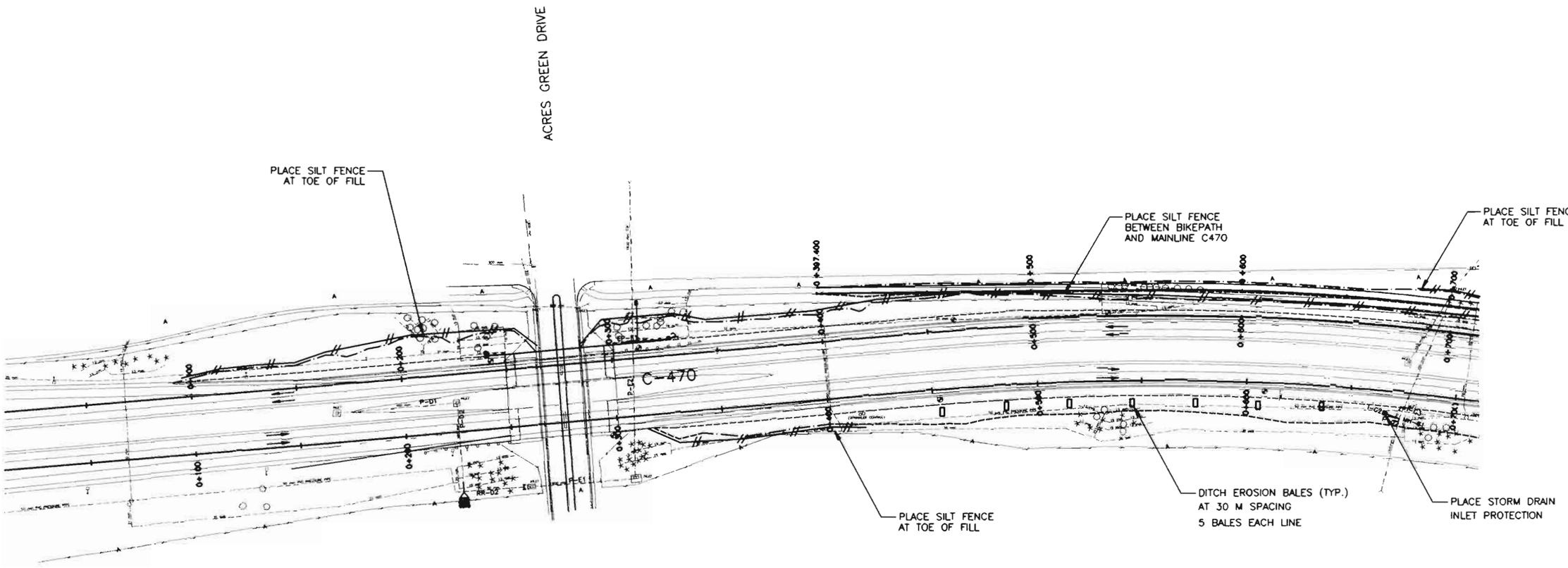

LEGEND

- EROSION BALES
- SILT FENCE
- TOP OF CUT
- TOE OF FILL

NOTE: WHOLE NUMBERS INDICATE MILLIMETERS
DECIMAL NUMBERS INDICATE METERS.

N

Original Scale 1:1000

FELSBURG HOLT & ULLEVIG

C-470/YOSEMITE INTERCHANGE

EROSION CONTROL PLAN

DATE	PROJECT NO.	DESIGNED BY EL	SHEET NO.	DRAWING NO.
JAN 96	95-088	DRAWN BY	OF SHEETS	EC-1
		CHECKED BY		

AS CONSTRUCTED				
NO REVISIONS 12-3-96	REVISED		VOID	

FEDERAL RD REGION NO.	DIVISION	PROJ. NO.	SHEET NO.	TOTAL SHEETS
VIII	COLORADO	CC 4701-082	88	137

REVISIONS		

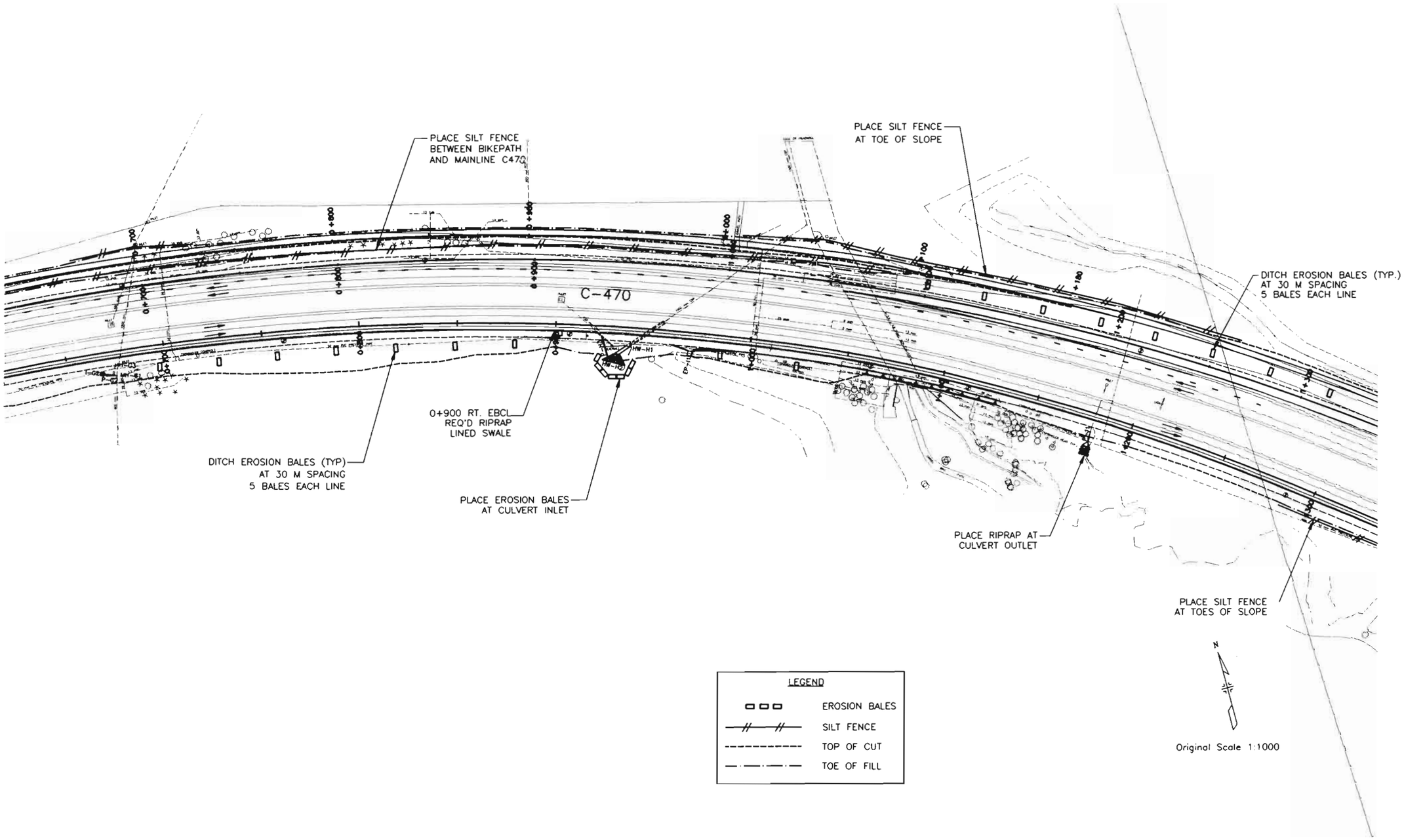

LEGEND

- EROSION BALES
- SILT FENCE
- TOP OF CUT
- TOE OF FILL

NOTE: WHOLE NUMBERS INDICATE MILLIMETERS
DECIMAL NUMBERS INDICATE METERS.

FELSBURG HOLT & ULLEVIG

C-470/YOSEMITE INTERCHANGE

EROSION CONTROL PLAN

DATE	PROJECT NO.	DESIGNED BY EL	SHEET NO.	DRAWING NO.
JAN 96	95-088	DRAWN BY	OF SHEETS	EC-2
		CHECKED BY		

AS CONSTRUCTED			
NO REVISIONS 12-3-96	REVISED	VOID	

FEDERAL RD REGION NO.	DIVISION	PROJ. NO	SHEET NO.	TOTAL SHEETS
VIII	COLORADO	CC 4701-082	89	154

REVISIONS		

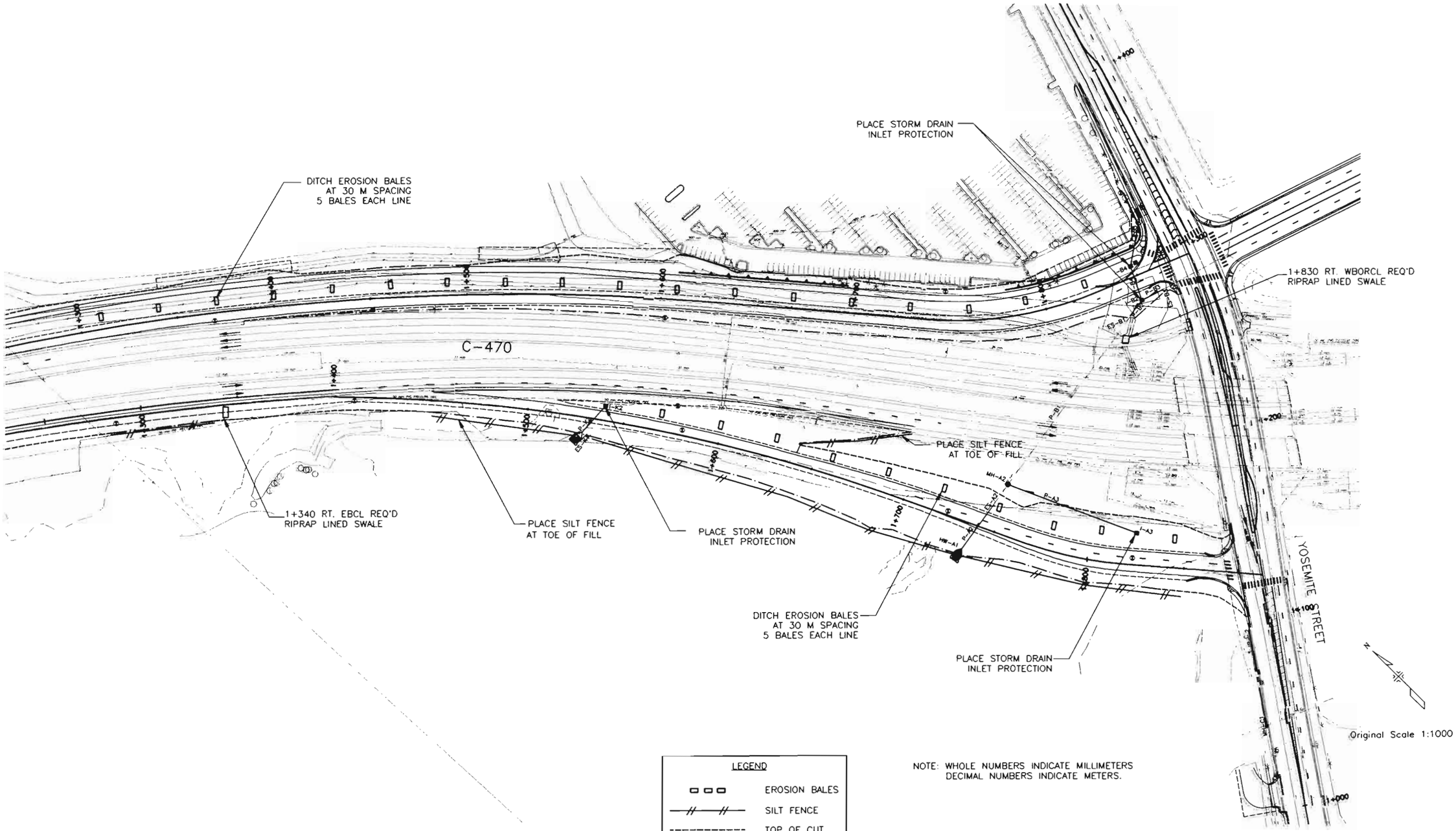
PLACE STORM DRAIN INLET PROTECTION
DITCH EROSION BALES AT 30 M SPACING 5 BALES EACH LINE
C-470
1+830 RT. WBORCL REQ'D RIPRAP LINED SWALE
PLACE SILT FENCE AT TOE OF FILL
1+340 RT. EBCL REQ'D RIPRAP LINED SWALE
PLACE SILT FENCE AT TOE OF FILL
PLACE STORM DRAIN INLET PROTECTION
DITCH EROSION BALES AT 30 M SPACING 5 BALES EACH LINE
PLACE STORM DRAIN INLET PROTECTION
YOSEMITE STREET
1+400
1+300
1+200
1+100
1+000
1+700
1+600
MH-A2
MH-A1
E-A1
P-A1
P-A2
P-A3
I-A3
E-A2
E-A3
E-B1
E-B2
E-B3
P-B1
P-B2
P-B3
I-B1
I-B2
I-B3
MH-B1
MH-B2
MH-B3
E-C1
E-C2
E-C3
P-C1
P-C2
P-C3
I-C1
I-C2
I-C3
MH-C1
MH-C2
MH-C3
E-D1
E-D2
E-D3
P-D1
P-D2
P-D3
I-D1
I-D2
I-D3
MH-D1
MH-D2
MH-D3
E-E1
E-E2
E-E3
P-E1
P-E2
P-E3
I-E1
I-E2
I-E3
MH-E1
MH-E2
MH-E3
E-F1
E-F2
E-F3
P-F1
P-F2
P-F3
I-F1
I-F2
I-F3
MH-F1
MH-F2
MH-F3
E-G1
E-G2
E-G3
P-G1
P-G2
P-G3
I-G1
I-G2
I-G3
MH-G1
MH-G2
MH-G3
E-H1
E-H2
E-H3
P-H1
P-H2
P-H3
I-H1
I-H2
I-H3
MH-H1
MH-H2
MH-H3
E-I1
E-I2
E-I3
P-I1
P-I2
P-I3
I-I1
I-I2
I-I3
MH-I1
MH-I2
MH-I3
E-J1
E-J2
E-J3
P-J1
P-J2
P-J3
I-J1
I-J2
I-J3
MH-J1
MH-J2
MH-J3
E-K1
E-K2
E-K3
P-K1
P-K2
P-K3
I-K1
I-K2
I-K3
MH-K1
MH-K2
MH-K3
E-L1
E-L2
E-L3
P-L1
P-L2
P-L3
I-L1
I-L2
I-L3
MH-L1
MH-L2
MH-L3
E-M1
E-M2
E-M3
P-M1
P-M2
P-M3
I-M1
I-M2
I-M3
MH-M1
MH-M2
MH-M3
E-N1
E-N2
E-N3
P-N1
P-N2
P-N3
I-N1
I-N2
I-N3
MH-N1
MH-N2
MH-N3
E-O1
E-O2
E-O3
P-O1
P-O2
P-O3
I-O1
I-O2
I-O3
MH-O1
MH-O2
MH-O3
E-P1
E-P2
E-P3
P-P1
P-P2
P-P3
I-P1
I-P2
I-P3
MH-P1
MH-P2
MH-P3
E-Q1
E-Q2
E-Q3
P-Q1
P-Q2
P-Q3
I-Q1
I-Q2
I-Q3
MH-Q1
MH-Q2
MH-Q3
E-R1
E-R2
E-R3
P-R1
P-R2
P-R3
I-R1
I-R2
I-R3
MH-R1
MH-R2
MH-R3
E-S1
E-S2
E-S3
P-S1
P-S2
P-S3
I-S1
I-S2
I-S3
MH-S1
MH-S2
MH-S3
E-T1
E-T2
E-T3
P-T1
P-T2
P-T3
I-T1
I-T2
I-T3
MH-T1
MH-T2
MH-T3
E-U1
E-U2
E-U3
P-U1
P-U2
P-U3
I-U1
I-U2
I-U3
MH-U1
MH-U2
MH-U3
E-V1
E-V2
E-V3
P-V1
P-V2
P-V3
I-V1
I-V2
I-V3
MH-V1
MH-V2
MH-V3
E-W1
E-W2
E-W3
P-W1
P-W2
P-W3
I-W1
I-W2
I-W3
MH-W1
MH-W2
MH-W3
E-X1
E-X2
E-X3
P-X1
P-X2
P-X3
I-X1
I-X2
I-X3
MH-X1
MH-X2
MH-X3
E-Y1
E-Y2
E-Y3
P-Y1
P-Y2
P-Y3
I-Y1
I-Y2
I-Y3
MH-Y1
MH-Y2
MH-Y3
E-Z1
E-Z2
E-Z3
P-Z1
P-Z2
P-Z3
I-Z1
I-Z2
I-Z3
MH-Z1
MH-Z2
MH-Z3
E-AA1
E-AA2
E-AA3
P-AA1
P-AA2
P-AA3
I-AA1
I-AA2
I-AA3
MH-AA1
MH-AA2
MH-AA3
E-AB1
E-AB2
E-AB3
P-AB1
P-AB2
P-AB3
I-AB1
I-AB2
I-AB3
MH-AB1
MH-AB2
MH-AB3
E-AC1
E-AC2
E-AC3
P-AC1
P-AC2
P-AC3
I-AC1
I-AC2
I-AC3
MH-AC1
MH-AC2
MH-AC3
E-AD1
E-AD2
E-AD3
P-AD1
P-AD2
P-AD3
I-AD1
I-AD2
I-AD3
MH-AD1
MH-AD2
MH-AD3
E-AE1
E-AE2
E-AE3
P-AE1
P-AE2
P-AE3
I-AE1
I-AE2
I-AE3
MH-AE1
MH-AE2
MH-AE3
E-AF1
E-AF2
E-AF3
P-AF1
P-AF2
P-AF3
I-AF1
I-AF2
I-AF3
MH-AF1
MH-AF2
MH-AF3
E-AG1
E-AG2
E-AG3
P-AG1
P-AG2
P-AG3
I-AG1
I-AG2
I-AG3
MH-AG1
MH-AG2
MH-AG3
E-AH1
E-AH2
E-AH3
P-AH1
P-AH2
P-AH3
I-AH1
I-AH2
I-AH3
MH-AH1
MH-AH2
MH-AH3
E-AI1
E-AI2
E-AI3
P-AI1
P-AI2
P-AI3
I-AI1
I-AI2
I-AI3
MH-AI1
MH-AI2
MH-AI3
E-AJ1
E-AJ2
E-AJ3
P-AJ1
P-AJ2
P-AJ3
I-AJ1
I-AJ2
I-AJ3
MH-AJ1
MH-AJ2
MH-AJ3
E-AK1
E-AK2
E-AK3
P-AK1
P-AK2
P-AK3
I-AK1
I-AK2
I-AK3
MH-AK1
MH-AK2
MH-AK3
E-AL1
E-AL2
E-AL3
P-AL1
P-AL2
P-AL3
I-AL1
I-AL2
I-AL3
MH-AL1
MH-AL2
MH-AL3
E-AM1
E-AM2
E-AM3
P-AM1
P-AM2
P-AM3
I-AM1
I-AM2
I-AM3
MH-AM1
MH-AM2
MH-AM3
E-AN1
E-AN2
E-AN3
P-AN1
P-AN2
P-AN3
I-AN1
I-AN2
I-AN3
MH-AN1
MH-AN2
MH-AN3
E-AO1
E-AO2
E-AO3
P-AO1
P-AO2
P-AO3
I-AO1
I-AO2
I-AO3
MH-AO1
MH-AO2
MH-AO3
E-AP1
E-AP2
E-AP3
P-AP1
P-AP2
P-AP3
I-AP1
I-AP2
I-AP3
MH-AP1
MH-AP2
MH-AP3
E-AQ1
E-AQ2
E-AQ3
P-AQ1
P-AQ2
P-AQ3
I-AQ1
I-AQ2
I-AQ3
MH-AQ1
MH-AQ2
MH-AQ3
E-AR1
E-AR2
E-AR3
P-AR1
P-AR2
P-AR3
I-AR1
I-AR2
I-AR3
MH-AR1
MH-AR2
MH-AR3
E-AS1
E-AS2
E-AS3
P-AS1
P-AS2
P-AS3
I-AS1
I-AS2
I-AS3
MH-AS1
MH-AS2
MH-AS3
E-AT1
E-AT2
E-AT3
P-AT1
P-AT2
P-AT3
I-AT1
I-AT2
I-AT3
MH-AT1
MH-AT2
MH-AT3
E-AU1
E-AU2
E-AU3
P-AU1
P-AU2
P-AU3
I-AU1
I-AU2
I-AU3
MH-AU1
MH-AU2
MH-AU3
E-AV1
E-AV2
E-AV3
P-AV1
P-AV2
P-AV3
I-AV1
I-AV2
I-AV3
MH-AV1
MH-AV2
MH-AV3
E-AW1
E-AW2
E-AW3
P-AW1
P-AW2
P-AW3
I-AW1
I-AW2
I-AW3
MH-AW1
MH-AW2
MH-AW3
E-AX1
E-AX2
E-AX3
P-AX1
P-AX2
P-AX3
I-AX1
I-AX2
I-AX3
MH-AX1
MH-AX2
MH-AX3
E-AY1
E-AY2
E-AY3
P-AY1
P-AY2
P-AY3
I-AY1
I-AY2
I-AY3
MH-AY1
MH-AY2
MH-AY3
E-AZ1
E-AZ2
E-AZ3
P-AZ1
P-AZ2
P-AZ3
I-AZ1
I-AZ2
I-AZ3
MH-AZ1
MH-AZ2
MH-AZ3
E-BA1
E-BA2
E-BA3
P-BA1
P-BA2
P-BA3
I-BA1
I-BA2
I-BA3
MH-BA1
MH-BA2
MH-BA3
E-BB1
E-BB2
E-BB3
P-BB1
P-BB2
P-BB3
I-BB1
I-BB2
I-BB3
MH-BB1
MH-BB2
MH-BB3
E-BC1
E-BC2
E-BC3
P-BC1
P-BC2
P-BC3
I-BC1
I-BC2
I-BC3
MH-BC1
MH-BC2
MH-BC3
E-BD1
E-BD2
E-BD3
P-BD1
P-BD2
P-BD3
I-BD1
I-BD2
I-BD3
MH-BD1
MH-BD2
MH-BD3
E-BE1
E-BE2
E-BE3
P-BE1
P-BE2
P-BE3
I-BE1
I-BE2
I-BE3
MH-BE1
MH-BE2
MH-BE3
E-BF1
E-BF2
E-BF3
P-BF1
P-BF2
P-BF3
I-BF1
I-BF2
I-BF3
MH-BF1
MH-BF2
MH-BF3
E-BG1
E-BG2
E-BG3
P-BG1
P-BG2
P-BG3
I-BG1
I-BG2
I-BG3
MH-BG1
MH-BG2
MH-BG3
E-BH1
E-BH2
E-BH3
P-BH1
P-BH2
P-BH3
I-BH1
I-BH2
I-BH3
MH-BH1
MH-BH2
MH-BH3
E-BI1
E-BI2
E-BI3
P-BI1
P-BI2
P-BI3
I-BI1
I-BI2
I-BI3
MH-BI1
MH-BI2
MH-BI3
E-BJ1
E-BJ2
E-BJ3
P-BJ1
P-BJ2
P-BJ3
I-BJ1
I-BJ2
I-BJ3
MH-BJ1
MH-BJ2
MH-BJ3
E-BK1
E-BK2
E-BK3
P-BK1
P-BK2
P-BK3
I-BK1
I-BK2
I-BK3
MH-BK1
MH-BK2
MH-BK3
E-BL1
E-BL2
E-BL3
P-BL1
P-BL2
P-BL3
I-BL1
I-BL2
I-BL3
MH-BL1
MH-BL2
MH-BL3
E-BM1
E-BM2
E-BM3
P-BM1
P-BM2
P-BM3
I-BM1
I-BM2
I-BM3
MH-BM1
MH-BM2
MH-BM3
E-BN1
E-BN2
E-BN3
P-BN1
P-BN2
P-BN3
I-BN1
I-BN2
I-BN3
MH-BN1
MH-BN2
MH-BN3
E-BO1
E-BO2
E-BO3
P-BO1
P-BO2
P-BO3
I-BO1
I-BO2
I-BO3
MH-BO1
MH-BO2
MH-BO3
E-BP1
E-BP2
E-BP3
P-BP1
P-BP2
P-BP3
I-BP1
I-BP2
I-BP3
MH-BP1
MH-BP2
MH-BP3
E-BQ1
E-BQ2
E-BQ3
P-BQ1
P-BQ2
P-BQ3
I-BQ1
I-BQ2
I-BQ3
MH-BQ1
MH-BQ2
MH-BQ3
E-BR1
E-BR2
E-BR3
P-BR1
P-BR2
P-BR3
I-BR1
I-BR2
I-BR3
MH-BR1
MH-BR2
MH-BR3
E-BS1
E-BS2
E-BS3
P-BS1
P-BS2
P-BS3
I-BS1
I-BS2
I-BS3
MH-BS1
MH-BS2
MH-BS3
E-BT1
E-BT2
E-BT3
P-BT1
P-BT2
P-BT3
I-BT1
I-BT2
I-BT3
MH-BT1
MH-BT2
MH-BT3
E-BU1
E-BU2
E-BU3
P-BU1
P-BU2
P-BU3
I-BU1
I-BU2
I-BU3
MH-BU1
MH-BU2
MH-BU3
E-BV1
E-BV2
E-BV3
P-BV1
P-BV2
P-BV3
I-BV1
I-BV2
I-BV3
MH-BV1
MH-BV2
MH-BV3
E-BW1
E-BW2
E-BW3
P-BW1
P-BW2
P-BW3
I-BW1
I-BW2
I-BW3
MH-BW1
MH-BW2
MH-BW3
E-BX1
E-BX2
E-BX3
P-BX1
P-BX2
P-BX3
I-BX1
I-BX2
I-BX3
MH-BX1
MH-BX2
MH-BX3
E-BY1
E-BY2
E-BY3
P-BY1
P-BY2
P-BY3
I-BY1
I-BY2
I-BY3
MH-BY1
MH-BY2
MH-BY3
E-BZ1
E-BZ2
E-BZ3
P-BZ1
P-BZ2
P-BZ3
I-BZ1
I-BZ2
I-BZ3
MH-BZ1
MH-BZ2
MH-BZ3
E-CA1
E-CA2
E-CA3
P-CA1
P-CA2
P-CA3
I-CA1
I-CA2
I-CA3
MH-CA1
MH-CA2
MH-CA3
E-CB1
E-CB2
E-CB3
P-CB1
P-CB2
P-CB3
I-CB1
I-CB2
I-CB3
MH-CB1
MH-CB2
MH-CB3
E-CC1
E-CC2
E-CC3
P-CC1
P-CC2
P-CC3
I-CC1
I-CC2
I-CC3
MH-CC1
MH-CC2
MH-CC3
E-CD1
E-CD2
E-CD3
P-CD1
P-CD2
P-CD3
I-CD1
I-CD2
I-CD3
MH-CD1
MH-CD2
MH-CD3
E-CE1
E-CE2
E-CE3
P-CE1
P-CE2
P-CE3
I-CE1
I-CE2
I-CE3
MH-CE1
MH-CE2
MH-CE3
E-CF1
E-CF2
E-CF3
P-CF1
P-CF2
P-CF3
I-CF1
I-CF2
I-CF3
MH-CF1
MH-CF2
MH-CF3
E-CG1
E-CG2
E-CG3
P-CG1
P-CG2
P-CG3
I-CG1
I-CG2
I-CG3
MH-CG1
MH-CG2
MH-CG3
E-CH1
E-CH2
E-CH3
P-CH1
P-CH2
P-CH3
I-CH1
I-CH2
I-CH3
MH-CH1
MH-CH2
MH-CH3
E-CI1
E-CI2
E-CI3
P-CI1
P-CI2
P-CI3
I-CI1
I-CI2
I-CI3
MH-CI1
MH-CI2
MH-CI3
E-CJ1
E-CJ2
E-CJ3
P-CJ1
P-CJ2
P-CJ3
I-CJ1
I-CJ2
I-CJ3
MH-CJ1
MH-CJ2
MH-CJ3
E-CK1
E-CK2
E-CK3
P-CK1
P-CK2
P-CK3
I-CK1
I-CK2
I-CK3
MH-CK1
MH-CK2
MH-CK3
E-CL1
E-CL2
E-CL3
P-CL1
P-CL2
P-CL3
I-CL1
I-CL2
I-CL3
MH-CL1
MH-CL2
MH-CL3
E-CM1
E-CM2
E-CM3
P-CM1
P-CM2
P-CM3
I-CM1
I-CM2
I-CM3
MH-CM1
MH-CM2
MH-CM3
E-CN1
E-CN2
E-CN3
P-CN1
P-CN2
P-CN3
I-CN1
I-CN2
I-CN3
MH-CN1
MH-CN2
MH-CN3
E-CO1
E-CO2
E-CO3
P-CO1
P-CO2
P-CO3
I-CO1
I-CO2
I-CO3
MH-CO1
MH-CO2
MH-CO3
E-CP1
E-CP2
E-CP3
P-CP1
P-CP2
P-CP3
I-CP1
I-CP2
I-CP3
MH-CP1
MH-CP2
MH-CP3
E-CQ1
E-CQ2
E-CQ3
P-CQ1
P-CQ2
P-CQ3
I-CQ1
I-CQ2
I-CQ3
MH-CQ1
MH-CQ2
MH-CQ3
E-CR1
E-CR2
E-CR3
P-CR1
P-CR2
P-CR3
I-CR1
I-CR2
I-CR3
MH-CR1
MH-CR2
MH-CR3
E-CS1
E-CS2
E-CS3
P-CS1
P-CS2
P-CS3
I-CS1
I-CS2
I-CS3
MH-CS1
MH-CS2
MH-CS3
E-CT1
E-CT2
E-CT3
P-CT1
P-CT2
P-CT3
I-CT1
I-CT2
I-CT3
MH-CT1
MH-CT2
MH-CT3
E-CU1
E-CU2
E-CU3
P-CU1
P-CU2
P-CU3
I-CU1
I-CU2
I-CU3
MH-CU1
MH-CU2
MH-CU3
E-CV1
E-CV2
E-CV3
P-CV1
P-CV2
P-CV3
I-CV1
I-CV2
I-CV3
MH-CV1
MH-CV2
MH-CV3
E-CW1
E-CW2
E-CW3
P-CW1
P-CW2
P-CW3
I-CW1
I-CW2
I-CW3
MH-CW1
MH-CW2
MH-CW3
E-CX1
E-CX2
E-CX3
P-CX1
P-CX2
P-CX3
I-CX1
I-CX2
I-CX3
MH-CX1
MH-CX2
MH-CX3
E-CY1
E-CY2
E-CY3
P-CY1
P-CY2
P-CY3
I-CY1
I-CY2
I-CY3
MH-CY1
MH-CY2
MH-CY3
E-CZ1
E-CZ2
E-CZ3
P-CZ1
P-CZ2
P-CZ3
I-CZ1
I-CZ2
I-CZ3
MH-CZ1
MH-CZ2
MH-CZ3
E-DA1
E-DA2
E-DA3
P-DA1
P-DA2
P-DA3
I-DA1
I-DA2
I-DA3
MH-DA1
MH-DA2
MH-DA3
E-DB1
E-DB2
E-DB3
P-DB1
P-DB2
P-DB3
I-DB1
I-DB2
I-DB3
MH-DB1
MH-DB2
MH-DB3
E-DC1
E-DC2
E-DC3
P-DC1
P-DC2
P-DC3
I-DC1
I-DC2
I-DC3
MH-DC1
MH-DC2
MH-DC3
E-DD1
E-DD2
E-DD3
P-DD1
P-DD2
P-DD3
I-DD1
I-DD2
I-DD3
MH-DD1
MH-DD2
MH-DD3
E-DE1
E-DE2
E-DE3
P-DE1
P-DE2
P-DE3
I-DE1
I-DE2
I-DE3
MH-DE1
MH-DE2
MH-DE3
E-DF1
E-DF2
E-DF3
P-DF1
P-DF2
P-DF3
I-DF1
I-DF2
I-DF3
MH-DF1
MH-DF2
MH-DF3
E-DG1
E-DG2
E-DG3
P-DG1
P-DG2
P-DG3
I-DG1
I-DG2
I-DG3
MH-DG1
MH-DG2
MH-DG3
E-DH1
E-DH2
E-DH3
P-DH1
P-DH2
P-DH3
I-DH1
I-DH2
I-DH3
MH-DH1
MH-DH2
MH-DH3
E-DI1
E-DI2
E-DI3
P-DI1
P-DI2
P-DI3
I-DI1
I-DI2
I-DI3
MH-DI1
MH-DI2
MH-DI3
E-DJ1
E-DJ2
E-DJ3
P-DJ1
P-DJ2
P-DJ3
I-DJ1
I-DJ2
I-DJ3
MH-DJ1
MH-DJ2
MH-DJ3
E-DK1
E-DK2
E-DK3
P-DK1
P-DK2
P-DK3
I-DK1
I-DK2
I-DK3
MH-DK1
MH-DK2
MH-DK3
E-DL1
E-DL2
E-DL3
P-DL1
P-DL2
P-DL3
I-DL1
I-DL2
I-DL3
MH-DL1
MH-DL2
MH-DL3
E-DM1
E-DM2
E-DM3
P-DM1
P-DM2
P-DM3
I-DM1
I-DM2
I-DM3
MH-DM1
MH-DM2
MH-DM3
E-DN1
E-DN2
E-DN3
P-DN1
P-DN2
P-DN3
I-DN1
I-DN2
I-DN3
MH-DN1
MH-DN2
MH-DN3
E-DO1
E-DO2
E-DO3
P-DO1
P-DO2
P-DO3
I-DO1
I-DO2
I-DO3
MH-DO1
MH-DO2
MH-DO3
E-DP1
E-DP2
E-DP3
P-DP1
P-DP2
P-DP3
I-DP1
I-DP2
I-DP3
MH-DP1
MH-DP2
MH-DP3
E-DQ1
E-DQ2
E-DQ3
P-DQ1
P-DQ2
P-DQ3
I-DQ1
I-DQ2
I-DQ3
MH-DQ1
MH-DQ2
MH-DQ3
E-DR1
E-DR2
E-DR3
P-DR1
P-DR2
P-DR3
I-DR1
I-DR2
I-DR3
MH-DR1
MH-DR2
MH-DR3
E-DS1
E-DS2
E-DS3
P-DS1
P-DS2
P-DS3
I-DS1
I-DS2
I-DS3
MH-DS1
MH-DS2
MH-DS3
E-DT1
E-DT2
E-DT3
P-DT1
P-DT2
P-DT3
I-DT1
I-DT2
I-DT3
MH-DT1
MH-DT2
MH-DT3
E-DU1
E-DU2
E-DU3
P-DU1
P-DU2
P-DU3
I-DU1
I-DU2
I-DU3
MH-DU1
MH-DU2
MH-DU3
E-DV1
E-DV2
E-DV3
P-DV1
P-DV2
P-DV3
I-DV1
I-DV2
I-DV3
MH-DV1
MH-DV2
MH-DV3
E-DW1
E-DW2
E-DW3
P-DW1
P-DW2
P-DW3
I-DW1
I-DW2
I-DW3
MH-DW1
MH-DW2
MH-DW3
E-DX1
E-DX2
E-DX3
P-DX1
P-DX2
P-DX3
I-DX1
I-DX2
I-DX3
MH-DX1
MH-DX2
MH-DX3
E-DY1
E-DY2
E-DY3
P-DY1
P-DY2
P-DY3
I-DY1
I-DY2
I-DY3
MH-DY1
MH-DY2
MH-DY3
E-DZ1
E-DZ2
E-DZ3
P-DZ1
P-DZ2
P-DZ3
I-DZ1
I-DZ2
I-DZ3
MH-DZ1
MH-DZ2
MH-DZ3
E-EA1
E-EA2
E-EA3
P-EA1
P-EA2
P-EA3
I-EA1
I-EA2
I-EA3
MH-EA1
MH-EA2
MH-EA3
E-EB1
E-EB2
E-EB3
P-EB1
P-EB2
P-EB3
I-EB1
I-EB2
I-EB3
MH-EB1
MH-EB2
MH-EB3
E-EC1
E-EC2
E-EC3
P-EC1
P-EC2
P-EC3
I-EC1
I-EC2
I-EC3
MH-EC1
MH-EC2
MH-EC3
E-ED1
E-ED2
E-ED3
P-ED1
P-ED2
P-ED3
I-ED1
I-ED2
I-ED3
MH-ED1
MH-ED2
MH-ED3
E-EE1
E-EE2
E-EE3
P-EE1
P-EE2
P-EE3
I-EE1
I-EE2
I-EE3
MH-EE1
MH-EE2
MH-EE3
E-EF1
E-EF2
E-EF3
P-EF1
P-EF2
P-EF3
I-EF1
I-EF2
I-EF3
MH-EF1
MH-EF2
MH-EF3
E-EG1
E-EG2
E-EG3
P-EG1
P-EG2
P-EG3
I-EG1
I-EG2
I-EG3
MH-EG1
MH-EG2
MH-EG3
E-EH1
E-EH2
E-EH3
P-EH1
P-EH2
P-EH3
I-EH1
I-EH2
I-EH3
MH-EH1
MH-EH2
MH-EH3
E-EI1
E-EI2
E-EI3
P-EI1
P-EI2
P-EI3
I-EI1
I-EI2
I-EI3
MH-EI1
MH-EI2
MH-EI3
E-EJ1
E-EJ2
E-EJ3
P-EJ1
P-EJ2
P-EJ3
I-EJ1
I-EJ2
I-EJ3
MH-EJ1
MH-EJ2
MH-EJ3
E-EK1
E-EK2
E-EK3
P-EK1
P-EK2
P-EK3
I-EK1
I-EK2
I-EK3
MH-EK1
MH-EK2
MH-EK3
E-EL1
E-EL2
E-EL3
P-EL1
P-EL2
P-EL3
I-EL1
I-EL2
I-EL3
MH-EL1
MH-EL2
MH-EL3
E-EM1
E-EM2
E-EM3
P-EM1
P-EM2
P-EM3
I-EM1
I-EM2
I-EM3
MH-EM1
MH-EM2
MH-EM3
E-EN1
E-EN2
E-EN3
P-EN1
P-EN2
P-EN3
I-EN1
I-EN2
I-EN3
MH-EN1
MH-EN2
MH-EN3
E-EO1
E-EO2
E-EO3
P-EO1
P-EO2
P-EO3
I-EO1
I-EO2
I-EO3
MH-EO1
MH-EO2
MH-EO3
E-EP1
E-EP2
E-EP3
P-EP1
P-EP2
P-EP3
I-EP1
I-EP2
I-EP3
MH-EP1
MH-EP2
MH-EP3
E-EQ1
E-EQ2
E-EQ3
P-EQ1
P-EQ2
P-EQ3
I-EQ1
I-EQ2
I-EQ3
MH-EQ1
MH-EQ2
MH-EQ3
E-ER1
E-ER2
E-ER3
P-ER1
P-ER2
P-ER3
I-ER1
I-ER2
I-ER3
MH-ER1
MH-ER2
MH-ER3
E-ES1
E-ES2
E-ES3
P-ES1
P-ES2
P-ES3
I-ES1
I-ES2
I-ES3
MH-ES1
MH-ES2
MH-ES3
E-ET1
E-ET2
E-ET3
P-ET1
P-ET2
P-ET3
I-ET1
I-ET2
I-ET3
MH-ET1
MH-ET2
MH-ET3
E-EU1
E-EU2
E-EU3
P-EU1
P-EU2
P-EU3
I-EU1
I-EU2
I-EU3
MH-EU1
MH-EU2
MH-EU3
E-EV1
E-EV2
E-EV3
P-EV1
P-EV2
P-EV3
I-EV1
I-EV2
I-EV3
MH-EV1
MH-EV2
MH-EV3
E-EW1
E-EW2
E-EW3
P-EW1
P-EW2
P-EW3
I-EW1
I-EW2
I-EW3
MH-EW1
MH-EW2
MH-EW3
E-EX1
E-EX2
E-EX3
P-EX1
P-EX2
P-EX3
I-EX1
I-EX2
I-EX3
MH-EX1
MH-EX2
MH-EX3
E-EY1
E-EY2
E-EY3
P-EY1
P-EY2
P-EY3
I-EY1
I-EY2
I-EY3
MH-EY1
MH-EY2
MH-EY3
E-EZ1
E-EZ2
E-EZ3
P-EZ1
P-EZ2
P-EZ3
I-EZ1
I-EZ2
I-EZ3
MH-EZ1
MH-EZ2
MH-EZ3
E-FA1
E-FA2
E-FA3
P-FA1
P-FA2
P-FA3
I-FA1
I-FA2
I-FA3
MH-FA1
MH-FA2
MH-FA3
E-FB1
E-FB2
E-FB3
P-FB1
P-FB2
P-FB3
I-FB1
I-FB2
I-FB3
MH-FB1
MH-FB2
MH-FB3
E-FC1
E-FC2
E-FC3
P-FC1
P-FC2
P-FC3
I-FC1
I-FC2
I-FC3
MH-FC1
MH-FC2
MH-FC3
E-FD1
E-FD2
E-FD3
P-FD1
P-FD2
P-FD3
I-FD1
I-FD2
I-FD3
MH-FD1
MH-FD2
MH-FD3
E-FE1
E-FE2
E-FE3
P-FE1
P-FE2
P-FE3
I-FE1
I-FE2
I-FE3
MH-FE1
MH-FE2
MH-FE3
E-FF1
E-FF2
E-FF3
P-FF1
P-FF2
P-FF3
I-FF1
I-FF2
I-FF3
MH-FF1
MH-FF2
MH-FF3
E-FG1
E-FG2
E-FG3
P-FG1
P-FG2
P-FG3
I-FG1
I-FG2
I-FG3
MH-FG1
MH-FG2
MH-FG3
E-FH1
E-FH2
E-FH3
P-FH1
P-FH2
P-FH3
I-FH1
I-FH2
I-FH3
MH-FH1
MH-FH2
MH-FH3
E-FI1
E-FI2
E-FI3
P-FI1
P-FI2
P-FI3
I-FI1
I-FI2
I-FI3
MH-FI1
MH-FI2
MH-FI3
E-FJ1
E-FJ2
E-FJ3
P-FJ1
P-FJ2
P-FJ3
I-FJ1
I-FJ2
I-FJ3
MH-FJ1
MH-FJ2
MH-FJ3
E-FK1
E-FK2
E-FK3
P-FK1
P-FK2
P-FK3
I-FK1
I-FK2
I-FK3
MH-FK1
MH-FK2
MH-FK3
E-FL1
E-FL2
E-FL3
P-FL1
P-FL2
P-FL3
I-FL1
I-FL2
I-FL3
MH-FL1
MH-FL2
MH-FL3
E-FM1
E-FM2
E-FM3
P-FM1
P-FM2
P-FM3
I-FM1
I-FM2
I-FM3
MH-FM1
MH-FM2
MH-FM3
E-FN1
E-FN2
E-FN3
P-FN1
P-FN2
P-FN3
I-FN1
I-FN2
I-FN3
MH-FN1
MH-FN2
MH-FN3
E-FO1
E-FO2
E-FO3
P-FO1
P-FO2
P-FO3
I-FO1
I-FO2
I-FO3
MH-FO1
MH-FO2
MH-FO3
E-FP1
E-FP2
E-FP3
P-FP1
P-FP2
P-FP3
I-FP1
I-FP2
I-FP3
MH-FP1
MH-FP2
MH-FP3
E-FQ1
E-FQ2
E-FQ3
P-FQ1
P-FQ2
P-FQ3
I-FQ1
I-FQ2
I-FQ3
MH-FQ1
MH-FQ2
MH-FQ3
E-FR1
E-FR2
E-FR3
P-FR1
P-FR2
P-FR3
I-FR1
I-FR2
I-FR3
MH-FR1
MH-FR2
MH-FR3
E-FS1
E-FS2
E-FS3
P-FS1
P-FS2
P-FS3
I-FS1
I-FS2
I-FS3
MH-FS1
MH-FS2
MH-FS3
E-FT1
E-FT2
E-FT3
P-FT1
P-FT2
P-FT3
I-FT1
I-FT2
I-FT3
MH-FT1
MH-FT2
MH-FT3
E-FU1
E-FU2
E-FU3
P-FU1
P-FU2
P-FU3
I-FU1
I-FU2
I-FU3
MH-FU1
MH-FU2
MH-FU3
E-FV1
E-FV2
E-FV3
P-FV1
P-FV2
P-FV3
I-FV1
I-FV2
I-FV3
MH-FV1
MH-FV2
MH-FV3
E-FW1
E-FW2
E-FW3
P-FW1
P-FW2
P-FW3
I-FW1
I-FW2
I-FW3
MH-FW1
MH-FW2
MH-FW3
E-FX1
E-FX2
E-FX3
P-FX1
P-FX2
P-FX3
I-FX1
I-FX2
I-FX3
MH-FX1
MH-FX2
MH-FX3
E-FY1
E-FY2
E-FY3
P-FY1
P-FY2
P-FY3
I-FY1
I-FY2
I-FY3
MH-FY1
MH-FY2
MH-FY3
E-FZ1
E-FZ2
E-FZ3
P-FZ1
P-FZ2
P-FZ3
I-FZ1
I-FZ2
I-FZ3
MH-FZ1
MH-FZ2
MH-FZ3
E-GA1
E-GA2
E-GA3
P-GA1
P-GA2
P-GA3
I-GA1
I-GA2
I-GA3
MH-GA1
MH-GA2
MH-GA3
E-GB1
E-GB2
E-GB3
P-GB1
P-GB2
P-GB3
I-GB1
I-GB2
I-GB3
MH-GB1
MH-GB2
MH-GB3
E-GC1
E-GC2
E-GC3
P-GC1
P-GC2
P-GC3
I-GC1
I-GC2
I-GC3
MH-GC1
MH-GC2
MH-GC3
E-GD1
E-GD2
E-GD3
P-GD1
P-GD2
P-GD3
I-GD1
I-GD2
I-GD3
MH-GD1
MH-GD2
MH-GD3
E-GE1
E-GE2
E-GE3
P-GE1
P-GE2
P-GE3
I-GE1
I-GE2
I-GE3
MH-GE1
MH-GE2
MH-GE3
E-GF1
E-GF2
E-GF3
P-GF1
P-GF2
P-GF3
I-GF1
I-GF2
I-GF3
MH-GF1
MH-GF2
MH-GF3
E-GG1
E-GG2
E-GG3
P-GG1
P-GG2
P-GG3
I-GG1
I-GG2
I-GG3
MH-GG1
MH-GG2
MH-GG3
E-GH1
E-GH2
E-GH3
P-GH1
P-GH2
P-GH3
I-GH1
I-GH2
I-GH3
MH-GH1
MH-GH2
MH-GH3
E-GI1
E-GI2
E-GI3
P-GI1
P-GI2
P-GI3
I-GI1
I-GI2
I-GI3
MH-GI1
MH-GI2
MH-GI3
E-GJ1
E-GJ2
E-GJ3
P-GJ1
P-GJ2
P-GJ3
I-GJ1
I-GJ2
I-GJ3
MH-GJ1
MH-GJ2
MH-GJ3
E-GK1
E-GK2
E-GK3
P-GK1
P-GK2
P-GK3
I-GK1
I-GK2
I-GK3
MH-GK1
MH-GK2
MH-GK3
E-GL1
E-GL2
E-GL3
P-GL1
P-GL2
P-GL3
I-GL1
I-GL2
I-GL3
MH-GL1
MH-GL2
MH-GL3
E-GM1
E-GM2
E-GM3
P-GM1
P-GM2
P-GM3
I-GM1
I-GM2
I-GM3
MH-GM1
MH-GM2
MH-GM3
E-GN1
E-GN2
E-GN3
P-GN1
P-GN2
P-GN3
I-GN1
I-GN2
I-GN3
MH-GN1
MH-GN2
MH-GN3
E-GO1
E-GO2
E-GO3
P-GO1
P-GO2
P-GO3
I-GO1
I-GO2
I-GO3
MH-GO1
MH-GO2
MH-GO3
E-GP1
E-GP2
E-GP3
P-GP1
P-GP2
P-GP3
I-GP1
I-GP2
I-GP3
MH-GP1
MH-GP2
MH-GP3
E-GQ1
E-GQ2
E-GQ3
P-GQ1
P-GQ2
P-GQ3
I-GQ1
I-GQ2
I-GQ3
MH-GQ1
MH-GQ2
MH-GQ3
E-GR1
E-GR2
E-GR3
P-GR1
P-GR2
P-GR3
I-GR1
I-GR2
I-GR3
MH-GR1
MH-GR2
MH-GR3
E-GS1
E-GS2
E-GS3
P-GS1
P-GS2
P-GS3
I-GS1
I-GS2
I-GS3
MH-GS1
MH-GS2
MH-GS3
E-GT1
E-GT2
E-GT3
P-GT1
P-GT2
P-GT3
I-GT1
I-GT2
I-GT3
MH-GT1
MH-GT2
MH-GT3
E-GU1
E-GU2
E-GU3
P-GU1
P-GU2
P-GU3
I-GU1
I-GU2
I-GU3
MH-GU1
MH-GU2
MH-GU3
E-GV1
E-GV2
E-GV3
P-GV1
P-GV2
P-GV3
I-GV1
I-GV2
I-GV3
MH-GV1
MH-GV2
MH-GV3
E-GW1
E-GW2
E-GW3
P-GW1
P-GW2
P-GW3
I-GW1
I-GW2
I-GW3
MH-GW1
MH-GW2
MH-GW3
E-GX1
E-GX2
E-GX3
P-GX1
P-GX2
P-GX3
I-GX1
I-GX2
I-GX3
MH-GX1
MH-GX2
MH-GX3
E-GY1
E-GY2
E-GY3
P-GY1
P-GY2
P-GY3
I-GY1
I-GY2
I-GY3
MH-GY1
MH-GY2
MH-GY3
E-

AS CONSTRUCTED				
NO REVISIONS	REVISED 12-3-96	VOID		

FEDERAL RD REGION NO.	DIVISION	PROJ. NO.	SHEET NO.	TOTAL SHEETS
VIII	COLORADO	CC 4701-082	90	154

REVISIONS

PLANTING TABULATION

ITEM	DESCRIPTION	UNITS	TOTAL QUANS.	L-1	L-2	L-3	L-4	L-5	L-6	SHEET TOTAL
	MULCHING (WOOD CHIP) FOR INFORMATION ONLY	M3	267.1							
214	DECIDUOUS TREE (50MM CALIPER)	EA.	34							
	CATALPA (CATALPA SECIOSA)			3	3		3		7	16
	PATMORE ASH (FRAXINUS PENNSYLVANICA 'PATMORE')				5			8		13
	AUTUMN PURPLE ASH (F. PENN. 'AUTUMN PURPLE')								5	5
214	DECIDUOUS SHRUB (NO. 5 CONTAINER)	EA.	129							
	GAMBEL OAK (QUERCUS GAMBELII)				12					12
	THREELEAF SUMAC (RHUS TRILOBATA)				12				31	43
	WAX CURRANT (RIBES CEREUM)								30	30
	MOUNTAIN MAHAGONY (CERCOCARPUS MONTANUS)								44	44
214	EVERGREEN TREE (2.4 M) (BALL & BURLAP)	EA.	65							
	PONDEROSA PINE (PINUS PONDEROSA)				8	7	6		20	41
	PINON PINE (PINUS CEMBROIDES EDULIS)							13	11	24
214	EVERGREEN TREE (3 M) (BALL AND BURLAP)	EA.	18				3		15	18
215	TRANSPLANT TREE (38 MM TO 75 MM CALIPER)	EA.	13		2	11				13

TOPSOIL IS FROM NON-DESIGNATED SOURCE

REMOVAL OF TREES AND SHRUBS IS COVERED UNDER CLEARING AND GRUBBING.

TRANSPLANTING IS TO BE ACCOMPLISHED AT THE BEGINNING OF THE JOB PRIOR TO JUNE 1, 1996.

PLANTING IS TO BE ACCOMPLISHED BETWEEN SEPTEMBER 15 AND OCTOBER 15, 1996

TRANSPLANTED TREES ARE TO BE WATERED ONCE PER MONTH DURING THE CONSTRUCTION PERIOD.

NO BARE ROOT MATERIAL WILL BE ACCEPTED.

PRIOR TO INSTALLATION, ALL TREE AND SHRUB LOCATIONS SHALL BE STAKED BY THE CONTRACTOR FOR APPROVAL BY THE ENGINEER.

FRESH WOOD CHIP MULCH 150 MM THICK SHALL BE REQUIRED FOR PLANTING BASINS, AND SHALL BE INCLUDED IN COST OF TRANSPLANTING ITEMS.

SOIL CONDITIONER (COMPOSTED ASPEN HUMUS) SHALL BE ADDED TO BACKFILL FOR TREES AND SHRUBS IN ACCORDANCE WITH SUBSECTION 214.03, AND REVISION OF SECTION 214. SOIL CONDITIONER SHALL BE INCLUDED IN THE PRICE OF THE WORK.

ALL WIRE BASKETS ON BALLED AND BURLAPPED TREES SHALL BE REMOVED PRIOR TO BACKFILLING OR AS DIRECTED BY THE ENGINEER.

SYMBOL LEGEND

CONIFER TREES
- PROPOSED
- EXIST. TO REMOVE
- EXIST. TO PROTECT

DECIDUOUS TREES
- PROPOSED
- EXIST. TO REMOVE
- EXIST. TO PROTECT
- PROPOSED SHRUB
- TEMPORARY FENCE

TUPA ASSOCIATES, INC.
DESIGN PLANNING RESEARCH
12487 E. Amherst Cr., Aurora, CO 80014 (303)476-9470

FELSBURG HOLT & ULLEVIG

C-470/YOSEMITE INTERCHANGE
LANDSCAPING TABULATIONS AND GENERAL NOTES

DATE	PROJECT NO.	DESIGNED BY / DRAWN BY / CHECKED BY	SHEET NO. / OF SHEETS	DRAWING NO.
FEB 96	95-088			L-0

AS CONSTRUCTED

NO REVISIONS [12-3-97] REVISED [ ] VOID [ ]

FEDERAL RD. REGION NO.	DIVISION	PROJ. NO.	SHEET NO.	TOTAL SHEETS
VIII	COLORADO	CC 4701-082	91	154

REVISIONS		

BEGIN PROJECT CC 4701-082
STA. 0+092 WB CONTROL LINE =
1320+98.75 PROJ. IXFU 470-1(17)

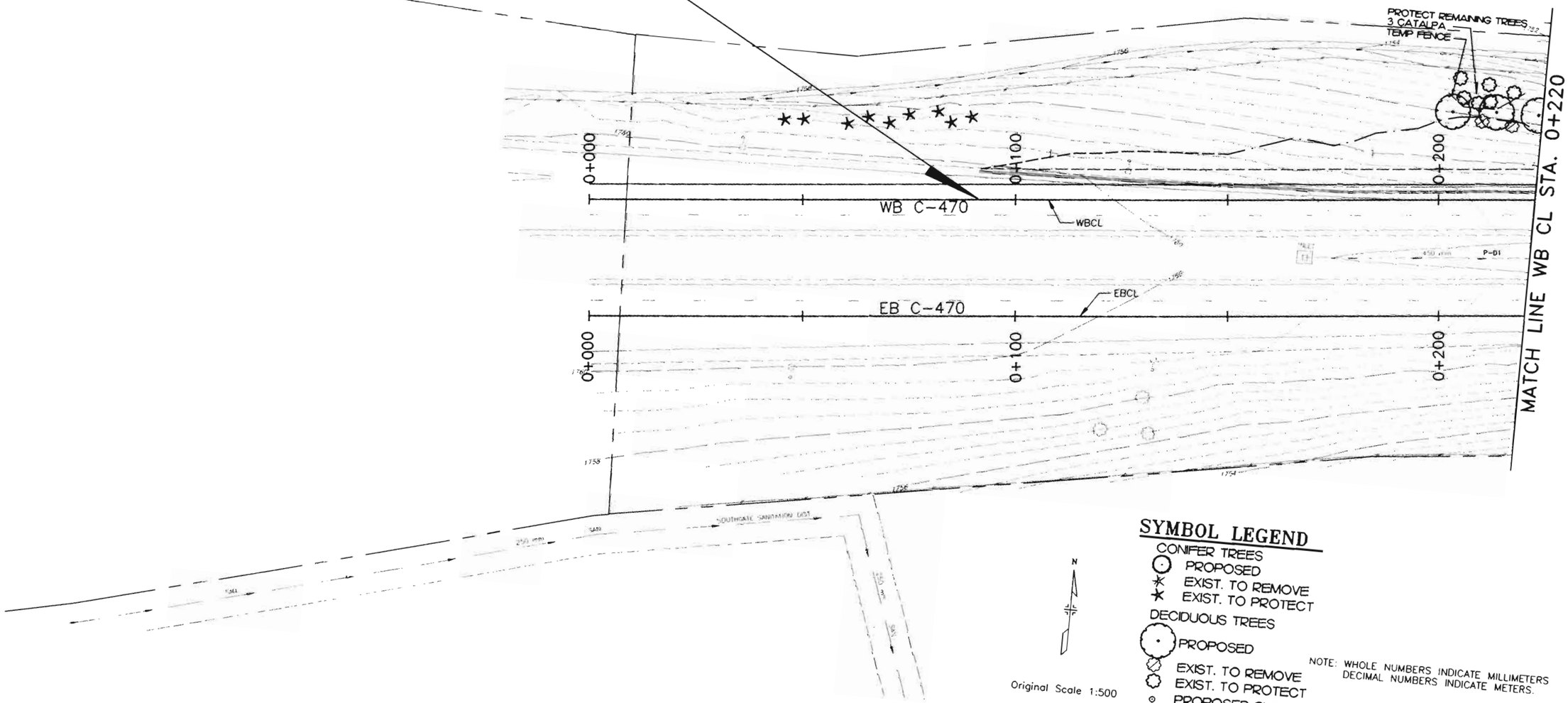

SYMBOL LEGEND

CONIFER TREES
- PROPOSED
- EXIST. TO REMOVE
- EXIST. TO PROTECT

DECIDUOUS TREES
- PROPOSED
- EXIST. TO REMOVE
- EXIST. TO PROTECT
- PROPOSED SHRUB
- TEMPORARY FENCE

N

Original Scale 1:500

NOTE: WHOLE NUMBERS INDICATE MILLIMETERS
DECIMAL NUMBERS INDICATE METERS.

TUPA ASSOCIATES, INC.
DESIGN

FELSBURG HOLT &

C-470/YOSEMITE INTERCHANGE

AS CONSTRUCTED					
NO REVISIONS	REVISED	VOID			

FEDERAL RD REGION NO.	DIVISION	PROJ. NO.	SHEET NO.	TOTAL SHEETS
VIII	COLORADO	CC 4701-082	92	154

REVISIONS

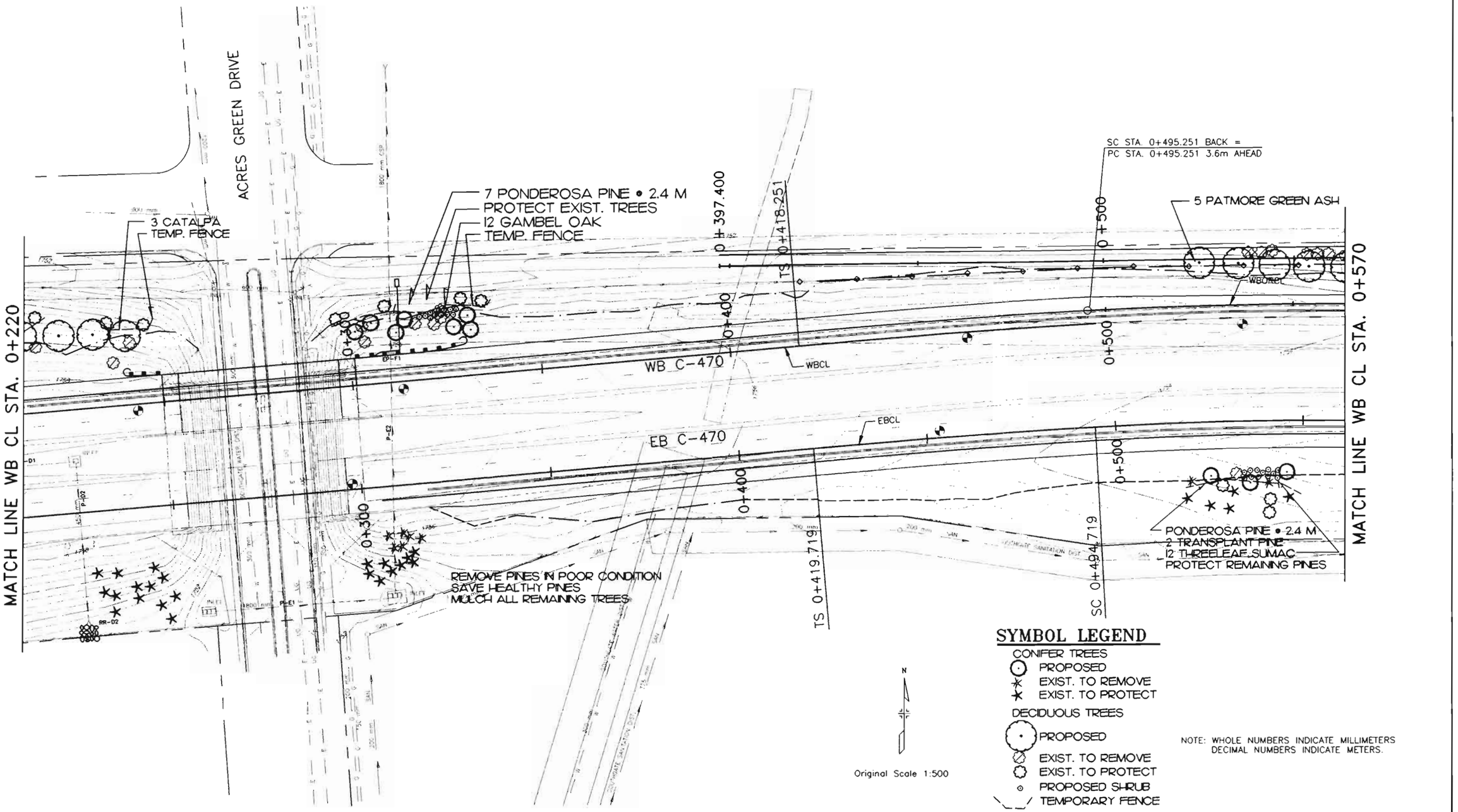

SYMBOL LEGEND

CONIFER TREES
- PROPOSED
- EXIST. TO REMOVE
- EXIST. TO PROTECT

DECIDUOUS TREES
- PROPOSED
- EXIST. TO REMOVE
- EXIST. TO PROTECT
- PROPOSED SHRUB
- TEMPORARY FENCE

NOTE: WHOLE NUMBERS INDICATE MILLIMETERS
DECIMAL NUMBERS INDICATE METERS.

TUPA ASSOCIATES, INC.
DESIGN PLANNING RESEARCH
12487 E. Amherst Cr., Aurora, CO 80014 (303)478-9470

FELSBURG HOLT & ULLEVIG

C-470/YOSEMITE INTERCHANGE

LANDSCAPE PLAN SHEET
C-470 WBCL STA. 0+220 TO STA. 0+570

DATE	PROJECT NO.	DESIGNED BY MJT / DRAWN BY MJT / CHECKED BY MJT	SHEET NO. 2 OF 8 SHEETS	DRAWING NO.
FEB 96	95-088			L-2

AS CONSTRUCTED				
NO REVISIONS 12-3-96	REVISED		VOID	

FEDERAL RD REGION NO.	DIVISION	PROJ. NO.	SHEET NO.	TOTAL SHEETS
VIII	COLORADO	CC 4701-082	93	154

REVISIONS		

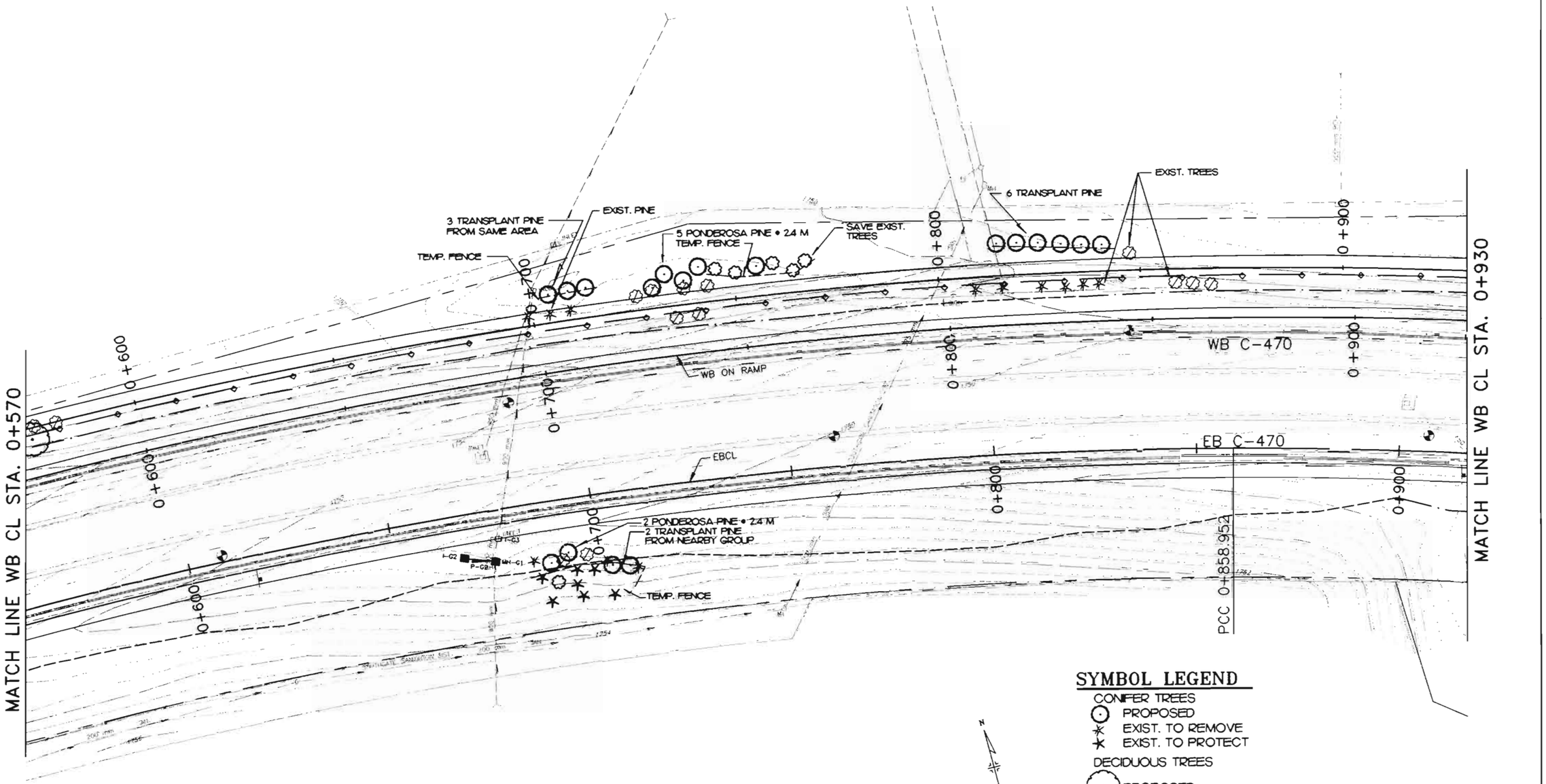

SYMBOL LEGEND

CONIFER TREES
- PROPOSED
- EXIST. TO REMOVE
- EXIST. TO PROTECT

DECIDUOUS TREES
- PROPOSED
- EXIST. TO REMOVE
- EXIST. TO PROTECT
- PROPOSED SHRUB
- TEMPORARY FENCE

NOTE: WHOLE NUMBERS INDICATE MILLIMETERS
DECIMAL NUMBERS INDICATE METERS.

Original Scale 1:500

TUPA ASSOCIATES, INC.
DESIGN PLANNING RESEARCH
12497 E. Amherst Cr., Aurora, CO 80014 (303)478-9478

FELSBURG HOLT & ULLEVIG

C-470/YOSEMITE INTERCHANGE

LANDSCAPE PLAN SHEET
C-470 WBCL STA. 0+570 TO STA. 0+930

DATE	PROJECT NO.	DESIGNED BY	DRAWN BY	CHECKED BY	SHEET NO.	OF	SHEETS	DRAWING NO.
FEB 96	95-088	MJT	MJT	MJT	3	8		L-3

AS CONSTRUCTED				
NO REVISIONS 12-3-96	REVISED		VOID	

FEDERAL RD REGION NO.	DIVISION	PROJ. NO.	SHEET NO.	TOTAL SHEETS
VIII	COLORADO	CC 4701-082	94	154

REVISIONS		

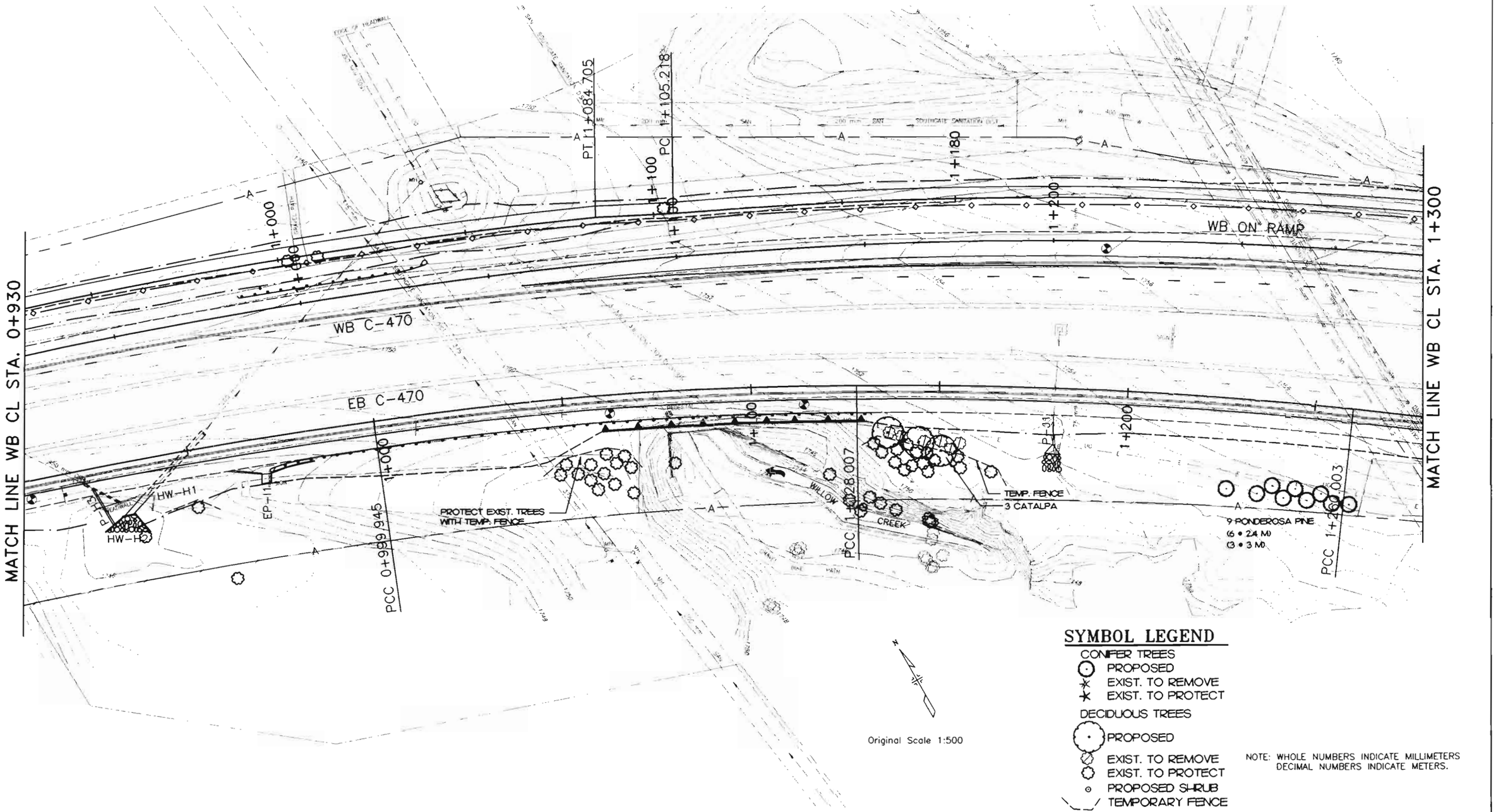

Original Scale 1:500

SYMBOL LEGEND

CONIFER TREES
- PROPOSED
- EXIST. TO REMOVE
- EXIST. TO PROTECT

DECIDUOUS TREES
- PROPOSED
- EXIST. TO REMOVE
- EXIST. TO PROTECT
- PROPOSED SHRUB
- TEMPORARY FENCE

NOTE: WHOLE NUMBERS INDICATE MILLIMETERS
DECIMAL NUMBERS INDICATE METERS.

TUPA ASSOCIATES, INC.
DESIGN PLANNING RESEARCH
12467 E. Amherst Cr., Aurora, CO 80014 (303)478-9470

FELSBURG HOLT & ULLEVIG

C-470/YOSEMITE INTERCHANGE

LANDSCAPE PLAN SHEET
C-470 WBCL STA. 0+930 TO STA. 1+300

DATE	PROJECT NO.	DESIGNED BY MJT	SHEET NO. 4	DRAWING NO.
FEB 96	95-088	DRAWN BY MJT	OF 8 SHEETS	L-4
		CHECKED BY MJT		

AS CONSTRUCTED				
NO REVISIONS 12-3-96	REVISED		VOID	

FEDERAL RD REGION NO.	DIVISION	PROJ. NO	SHEET NO.	TOTAL SHEETS
VIII	COLORADO	CC 4701-082	95	154

REVISIONS		

MATCH LINE WB CL STA. 1+300

MATCH LINE WB CL STA. 1+660

WB C-470

WB ON RAMP

EB C-470

EB OFF RAMP

1+300

1+400

1+500

1+600

PT STA 1+400.000 BACK =
PC STA 1+400.000 3.6m RT AHEAD

PT 1+400.000

PT 1+623.713

EBORCL

5 PATMORE GREEN ASH
1 PINON PINE

6 PINON PINE
3 PATMORE GREEN ASH

SYMBOL LEGEND

CONIFER TREES
- PROPOSED
- EXIST. TO REMOVE
- EXIST. TO PROTECT

DECIDUOUS TREES
- PROPOSED
- EXIST. TO REMOVE
- EXIST. TO PROTECT

PROPOSED SHRUB

TEMPORARY FENCE

Original Scale 1:500

NOTE: WHOLE NUMBERS INDICATE MILLIMETERS
DECIMAL NUMBERS INDICATE METERS.

TUPA ASSOCIATES, INC.
DESIGN PLANNING RESEARCH
12487 E. Amherst Cr., Aurora, CO 80014 (303)478-9470

FELSBURG HOLT & ULLEVIG

C-470/YOSEMITE INTERCHANGE

LANDSCAPE PLAN SHEET
C-470 WBCL STA. 1+300 TO STA. 1+660

DATE	PROJECT NO.	DESIGNED BY	SHEET NO.	DRAWING NO.
FEB 96	95-088	MJT	5	L-5
		DRAWN BY MJT		
		CHECKED BY MJT	OF 8 SHEETS	

AS CONSTRUCTED				
NO REVISIONS 12-3-96	REVISED		VOID	

FEDERAL RD REGION NO.	DIVISION	PROJ. NO.	SHEET NO.	TOTAL SHEETS
VIII	COLORADO	CC 4701-082	96	154

REVISIONS

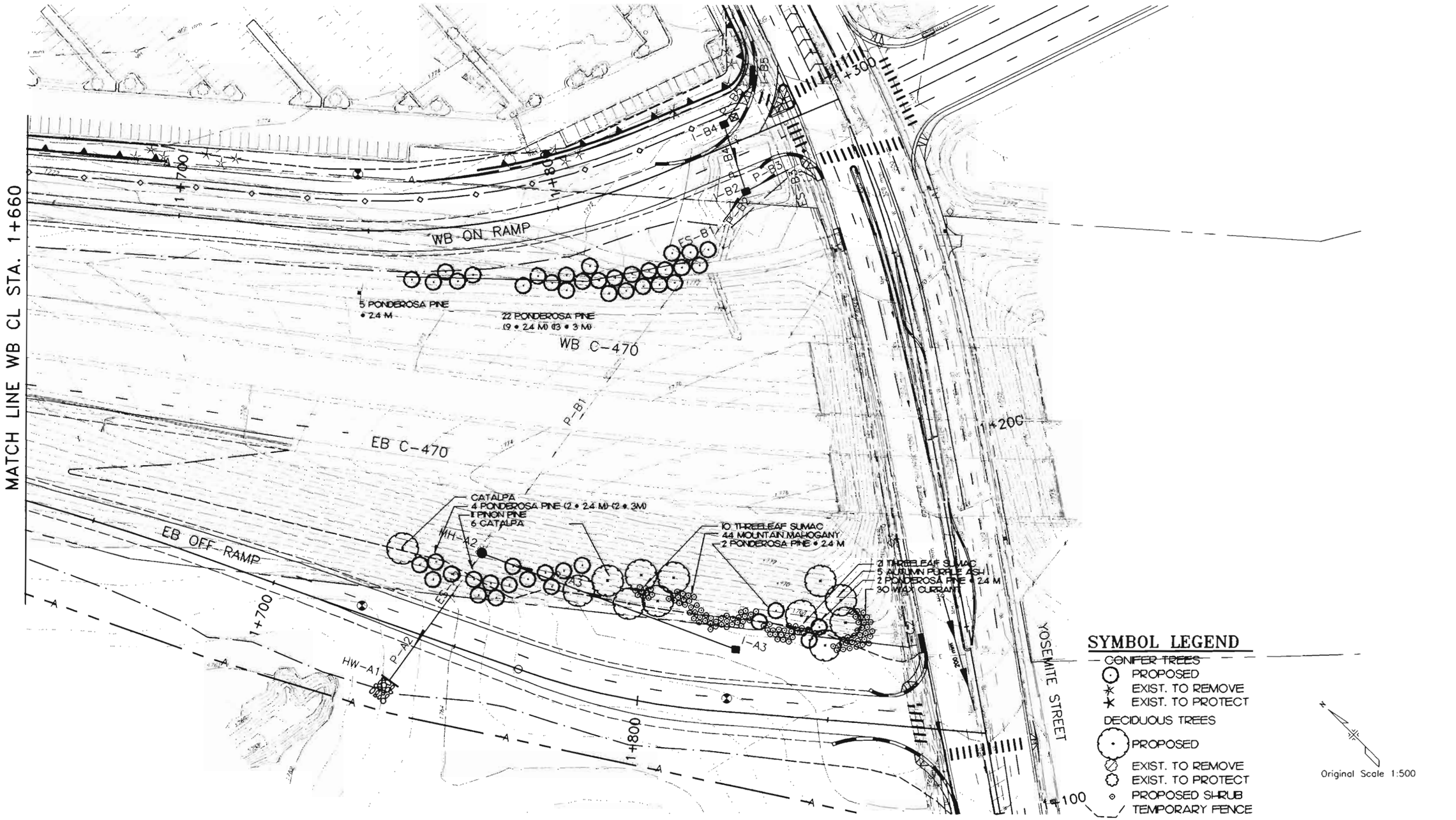

NOTE: WHOLE NUMBERS INDICATE MILLIMETERS
DECIMAL NUMBERS INDICATE METERS.

TUPA ASSOCIATES, INC.
DESIGN PLANNING RESEARCH
12487 E. Amherst Cr., Aurora, CO 80014 (303)478-9470

FELSBURG HOLT & ULLEVIG

C-470/YOSEMITE INTERCHANGE

LANDSCAPE PLAN SHEETS
C-470 WBCL STA. 1+660 TO STA. 1+878.735

DATE	PROJECT NO.	DESIGNED BY MJT	SHEET NO 6	DRAWING NO.
FEB 96	95-088	DRAWN BY MJT CHECKED BY MJT	OF 8 SHEETS	L-6

AS CONSTRUCTED			
NO REVISIONS ☐	REVISED 12-3-97	VOID ☐	

FEDERAL RD REGION NO.	DIVISION	PROJ. NO	SHEET NO.	TOTAL SHEETS
VIII	COLORADO	CC 4701-082	97	454

REVISIONS		

SUMMARY OF IRRIGATION MATERIAL QUANTITIES C-470 / YOSEMITE

ITEM NO.	SYMBOL	DESCRIPTION	UNIT	REMARKS / SHEET NO:	QUANTITIES 1	2	3	4	5	6	TOTAL
619		DN32 COPPER PIPE	METERS			3		3			6
619		DN15 PLASTIC PIPE	METERS		500	2200	1100	1400	700	2100	8000
619		DN25 PLASTIC PIPE	METERS		70	60	50	40	50	60	330
619		DN50 PLASTIC PIPE	METERS		338	661	720	740	744	377	3580
619		DN80 PLASTIC PIPE	METERS					70			70
619		DN100 PLASTIC PIPE	METERS	(SLEEVES)			8	40	166	20	234
623		HOSE SWIVEL	EACH							6	6
623		HOSE BIB	EACH							6	6
623	⊕	DN25 EMITTER VALVE ASSEMBLY	EACH		1	6	3	3	1	5	19
623	◪	DN15 FLUSH UNIT	EACH		1	7	7	5	2	8	30
623		DN15 AIR RELIEF UNIT	EACH		1	6	3	3	1	5	19
623	⧈	DN32 BACKFLOW PREVENTER	EACH			1		1			2
623		DN25 DRAIN VALVE	EACH		2	4	4	3	4	2	19
623		CONTROL WIRE 24 VOLT	METERS		2300	2700	4200	5500	4250	2000	20950
623		POWER SOURCE WIRE	METERS		115			100			215
623	△	DN25 QUICK-COUPLER VALVE	EACH		2	6	3	4	1	3	19
623	⋈	DN50 GATE VALVE	EACH		1	2	2	5	1		11
623	Ⓐ	12 STATION AUTOMATIC CONTROLLER	EACH					1			1
623	Ⓑ Ⓒ	8 STATION AUTOMATIC CONTROLLER	EACH		1			1			2
623		18 STATION AUTOMATIC CONTROLLER (FURNISH ONLY)	EACH	DELIVER TO PROJECT ENGINEER				1			1

NOTES

1. DESIGN IS BASED ON A MINIMUM AREA PRESSURE OF 450 kPa. CONTRACTOR SHALL VERIFY PRESSURE AND NOTIFY OWNERS' REPRESENTITIVE OF DISCREPENCIES.

2. INSTALL AN AIR RELIEF VALVE AT THE HIGH POINT OF EACH ZONE.

3. ALL UNIT PRICES SHALL INCLUDE ALL INCIDENTAL COMPONENTS AS SHOWN IN DETAIL DRAWINGS UNLESS A SEPARATE PAY ITEM HAS BEEN SPECIFICALLY REFERENCED.

4. USE EXISTING PIPE AND SLEEVES LOCATED UNDER C-470.

5. INCLUDE ALL COMPONENTS DESCRIBED IN SECTION 623.04 IN CONTROLLER UNIT PRICE.

6. THE PRIMARY RESPONSIBILITY OF MAINTAINING THE ORIGINAL DESIGN INTENT RESTS WITH THE SYSTEM OPERATOR. WHILE THE DESIGN INTENT IS NOT LISTED IN EVERY SPECIFIC DETAIL CHANGES SHOULD BE MADE WITHIN THE ORIGINAL DESIGN CONTEXT. THE OPERATOR SHOULD BE AWARE THAT ALL DESIGN DECISIONS WERE DELIBERATE AND TO CHANGING THE SYSTEM WILL UPSET THE WATER MANAGEMENT PROGRAM.

7. ELIMINATE PRESSURE REDUCING VALVES ON ZONES A-7 THRU A-10 AND C-5 & 6.

CALL UTILITY NOTIFICATION CENTER OF COLORADO
1-800-922-1987
OR **534-6700** IN METRO DENVER
CALL 2-BUSINESS DAYS IN ADVANCE BEFORE YOU DIG, GRADE, OR EXCAVATE FOR THE MARKING OF UNDERGROUND MEMBER UTILITIES.

Keesen Water Management, Inc.
420 South Marion Parkway, Suite 1502
Denver, Colorado 80209
Phone (303) 695-7711

CERTIFIED IRRIGATION DESIGNER COMMERCIAL #41082

FELSBURG HOLT & ULLEVIG

C-470/YOSEMITE INTERCHANGE
TABULATION OF QUANTITIES

DATE	PROJECT NO.	DESIGNED BY	DRAWN BY	CHECKED BY	SHEET NO.	OF SHEETS	DRAWING NO.
FEB 96	95-088	LEK	LEK	LEK	8	8	I-8

AS CONSTRUCTED				
NO REVISIONS	REVISED	VOID		

FEDERAL RD REGION NO	DIVISION	PROJ. NO.	SHEET NO.	TOTAL SHEETS
VIII	COLORADO	CC 4701-082	98	154

REVISIONS

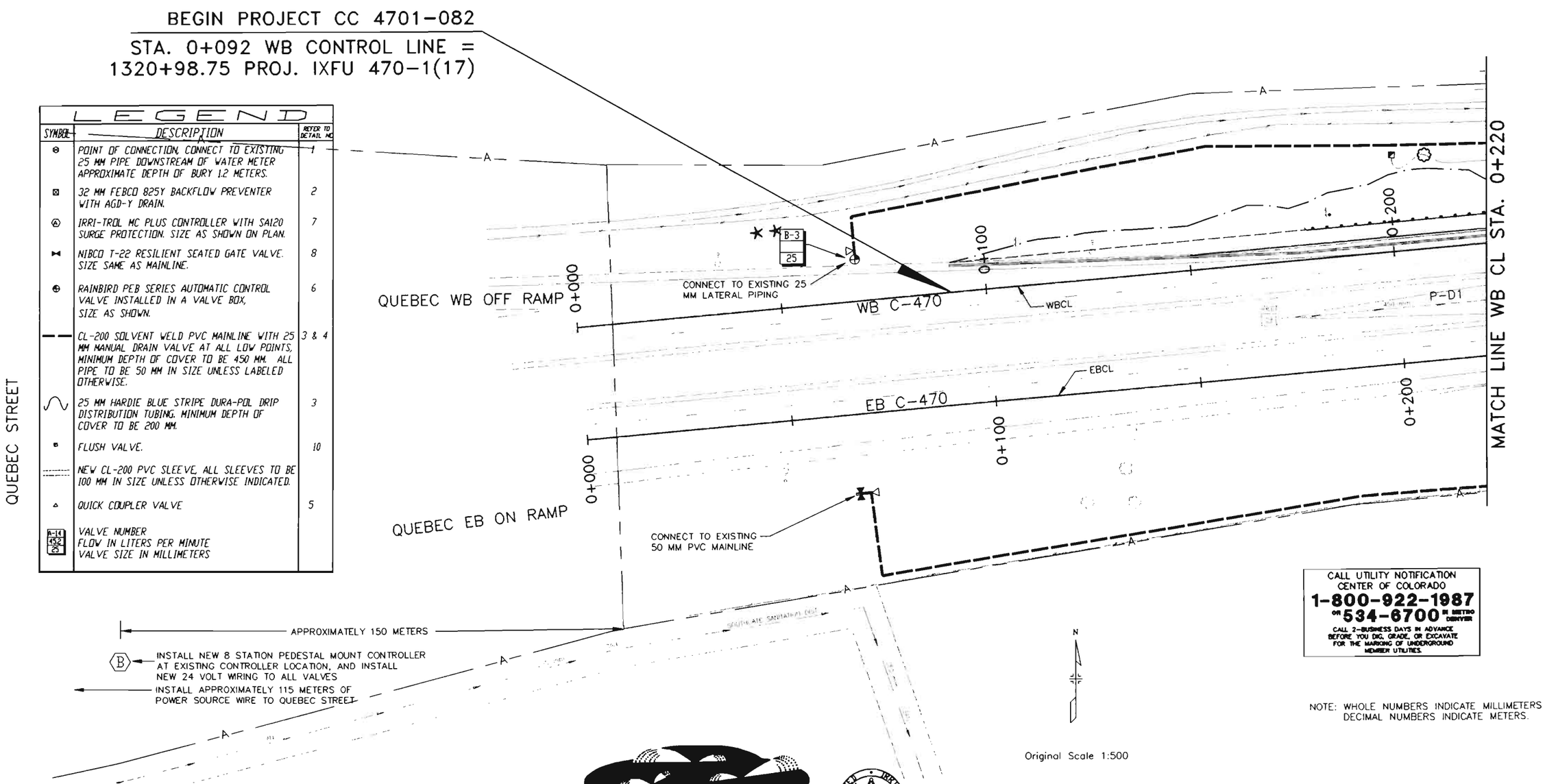

LEGEND

SYMBOL	DESCRIPTION	REFER TO DETAIL NO
	POINT OF CONNECTION, CONNECT TO EXISTING 25 MM PIPE DOWNSTREAM OF WATER METER APPROXIMATE DEPTH OF BURY 1.2 METERS.	1
	32 MM FEBCO 825Y BACKFLOW PREVENTER WITH AGD-Y DRAIN.	2
	IRRI-TROL MC PLUS CONTROLLER WITH SA120 SURGE PROTECTION. SIZE AS SHOWN ON PLAN.	7
	NIBCO T-22 RESILIENT SEATED GATE VALVE. SIZE SAME AS MAINLINE.	8
	RAINBIRD PEB SERIES AUTOMATIC CONTROL VALVE INSTALLED IN A VALVE BOX, SIZE AS SHOWN.	6
	CL-200 SOLVENT WELD PVC MAINLINE WITH 25 MM MANUAL DRAIN VALVE AT ALL LOW POINTS, MINIMUM DEPTH OF COVER TO BE 450 MM. ALL PIPE TO BE 50 MM IN SIZE UNLESS LABELED OTHERWISE.	3 & 4
	25 MM HARDIE BLUE STRIPE DURA-POL DRIP DISTRIBUTION TUBING. MINIMUM DEPTH OF COVER TO BE 200 MM.	3
	FLUSH VALVE.	10
	NEW CL-200 PVC SLEEVE, ALL SLEEVES TO BE 100 MM IN SIZE UNLESS OTHERWISE INDICATED.	
	QUICK COUPLER VALVE	5
A-14 / 45.2 / 25	VALVE NUMBER FLOW IN LITERS PER MINUTE VALVE SIZE IN MILLIMETERS	

CALL UTILITY NOTIFICATION CENTER OF COLORADO
1-800-922-1987
OR **534-6700** IN METRO DENVER
CALL 2-BUSINESS DAYS IN ADVANCE BEFORE YOU DIG, GRADE, OR EXCAVATE FOR THE MARKING OF UNDERGROUND MEMBER UTILITIES.

NOTE: WHOLE NUMBERS INDICATE MILLIMETERS
DECIMAL NUMBERS INDICATE METERS.

Original Scale 1:500

Keesen Water Management, Inc.
420 South Marion Pkwy., #1502
Denver, Colorado 80209
Phone (303) 695-7711

CERTIFIED IRRIGATION DESIGNER — COMMERCIAL 841882

TUPA ASSOCIATES, INC.
DESIGN PLANNING RESEARCH
12487 E. Amherst Cr., Aurora, CO 80014 (303)476-9470

FELSBURG HOLT & ULLEVIG

C-470/YOSEMITE INTERCHANGE

IRRIGATION SYSTEM PLAN SHEETS
C-470 WBCL STA. 0+092 TO STA. 0+220

DATE	PROJECT NO.	DESIGNED BY	SHEET NO.	DRAWING NO.
FEB 96	95-088	LEK DRAWN BY LEK CHECKED BY LEK	1 OF 8 SHEETS	I-1

AS CONSTRUCTED				
NO REVISIONS		REVISED		VOID 12/3/96

FEDERAL RD REGION NO.	DIVISION	PROJ. NO.	SHEET NO.	TOTAL SHEETS
VIII	COLORADO	CC 4701-082	99	154

REVISIONS		

LEGEND

SYMBOL	DESCRIPTION	REFER TO DETAIL NO.
●	POINT OF CONNECTION, CONNECT TO EXISTING 25 MM PIPE DOWNSTREAM OF WATER METER APPROXIMATE DEPTH OF BURY 1.2 METERS.	1
■	32 MM FEBCO 825Y BACKFLOW PREVENTER WITH AGD-Y DRAIN.	2
Ⓐ	IRRI-TROL MC PLUS CONTROLLER WITH SA120 SURGE PROTECTION. SIZE AS SHOWN ON PLAN.	7
⊢	NIBCO T-22 RESILIENT SEATED GATE VALVE. SIZE SAME AS MAINLINE.	8
⊕	RAINBIRD PEB SERIES AUTOMATIC CONTROL VALVE INSTALLED IN A VALVE BOX. SIZE AS SHOWN.	6
— —	CL-200 SOLVENT WELD PVC MAINLINE WITH 25 MM MANUAL DRAIN VALVE AT ALL LOW POINTS. MINIMUM DEPTH OF COVER TO BE 450 MM. ALL PIPE TO BE 50 MM IN SIZE UNLESS LABELED OTHERWISE.	3 & 4
∿	25 MM HARDIE BLUE STRIPE DURA-POL DRIP DISTRIBUTION TUBING. MINIMUM DEPTH OF COVER TO BE 200 MM.	3
▪	FLUSH VALVE.	10
------	NEW CL-200 PVC SLEEVE, ALL SLEEVES TO BE 100 MM IN SIZE UNLESS OTHERWISE INDICATED.	
△	QUICK COUPLER VALVE	5
	VALVE NUMBER FLOW IN LITERS PER MINUTE VALVE SIZE IN MILLIMETERS	

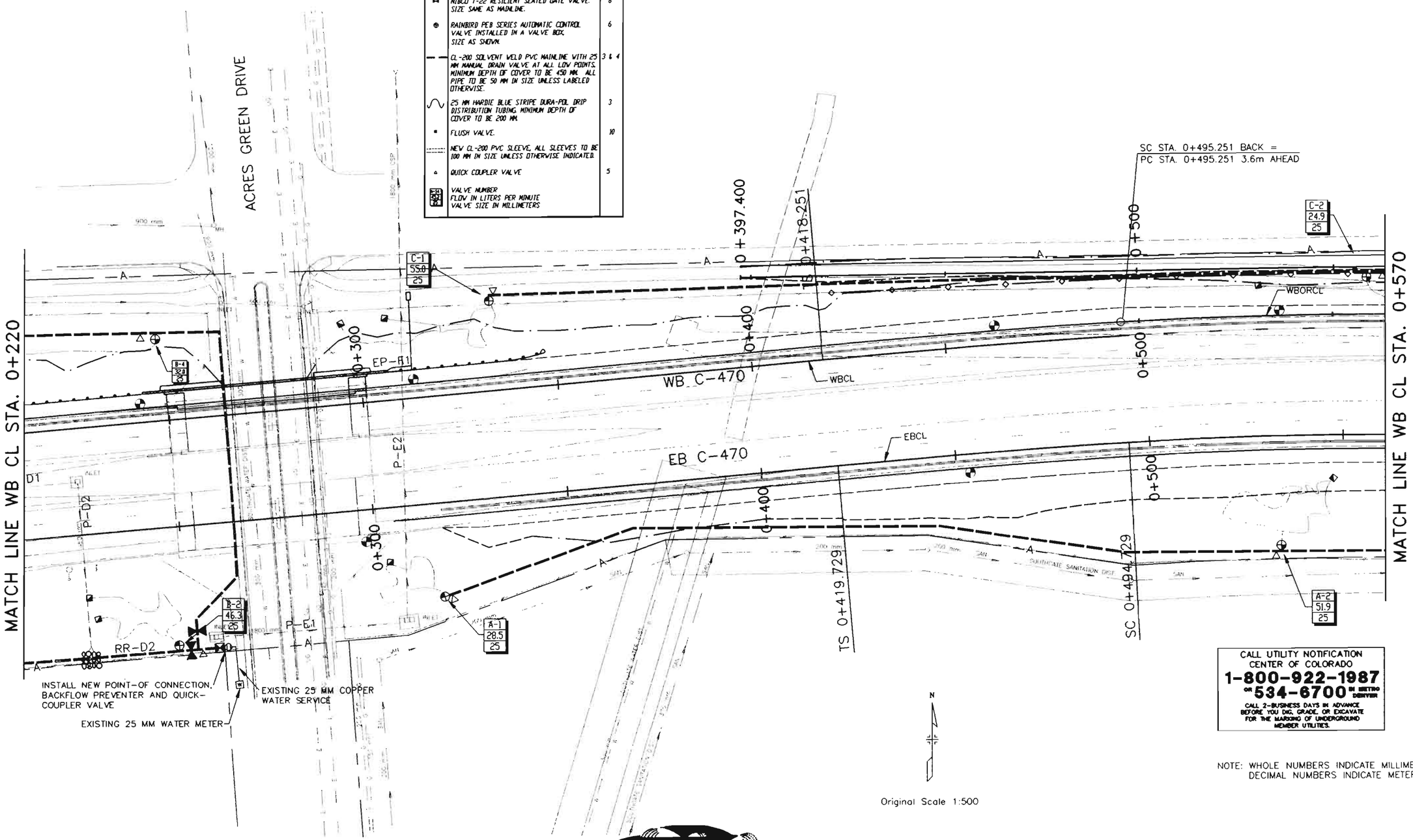

CALL UTILITY NOTIFICATION CENTER OF COLORADO
1-800-922-1987
OR **534-6700** IN METRO DENVER
CALL 2-BUSINESS DAYS IN ADVANCE BEFORE YOU DIG, GRADE, OR EXCAVATE FOR THE MARKING OF UNDERGROUND MEMBER UTILITIES.

NOTE: WHOLE NUMBERS INDICATE MILLIMETERS
DECIMAL NUMBERS INDICATE METERS.

Original Scale 1:500

Keesen Water Management, Inc.
420 South Marion Pkwy., #1502
Denver, Colorado 80209
Phone (303) 695-7711

TUPA ASSOCIATES, INC.
DESIGN PLANNING RESEARCH
12487 E. Amherst Cr., Aurora, CO 80014 (303)476-9470

FELSBURG HOLT & ULLEVIG

C-470/YOSEMITE INTERCHANGE

IRRIGATION SYSTEM PLAN SHEET
C-470 WBCL STA. 0+220 TO STA. 0+570

DATE	PROJECT NO.	DESIGNED BY LEK DRAWN BY LEK CHECKED BY LEK	SHEET NO. 2 OF 8 SHEETS	DRAWING NO
FEB 96	95-088			1-2

AS CONSTRUCTED				
NO REVISIONS		REVISED		VOID 12/3/96

FEDERAL RD REGION NO.	DIVISION	PROJ. NO.	SHEET NO	TOTAL SHEETS
VIII	COLORADO	CC 4701-082	100	154

REVISIONS

LEGEND

SYMBOL	DESCRIPTION	REFER TO DETAIL NO
⊖	POINT OF CONNECTION, CONNECT TO EXISTING 25 MM PIPE DOWNSTREAM OF WATER METER APPROXIMATE DEPTH OF BURY 1.2 METERS.	1
⊠	32 MM FEBCO 825Y BACKFLOW PREVENTER WITH AGD-Y DRAIN.	2
Ⓐ	IRRI-TROL MC PLUS CONTROLLER WITH SA120 SURGE PROTECTION. SIZE AS SHOWN ON PLAN.	7
⋈	NIBCO T-22 RESILIENT SEATED GATE VALVE. SIZE SAME AS MAINLINE.	8
⊕	RAINBIRD PEB SERIES AUTOMATIC CONTROL VALVE INSTALLED IN A VALVE BOX, SIZE AS SHOWN.	6
— —	CL-200 SOLVENT WELD PVC MAINLINE WITH 25 MM MANUAL DRAIN VALVE AT ALL LOW POINTS, MINIMUM DEPTH OF COVER TO BE 450 MM. ALL PIPE TO BE 50 MM IN SIZE UNLESS LABELED OTHERWISE.	3 & 4
∿	25 MM HARDIE BLUE STRIPE DURA-POL DRIP DISTRIBUTION TUBING. MINIMUM DEPTH OF COVER TO BE 200 MM.	3
▪	FLUSH VALVE.	10
----	NEW CL-200 PVC SLEEVE, ALL SLEEVES TO BE 100 MM IN SIZE UNLESS OTHERWISE INDICATED.	
△	QUICK COUPLER VALVE	5
A-14 / 45.2 / 25	VALVE NUMBER FLOW IN LITERS PER MINUTE VALVE SIZE IN MILLIMETERS	

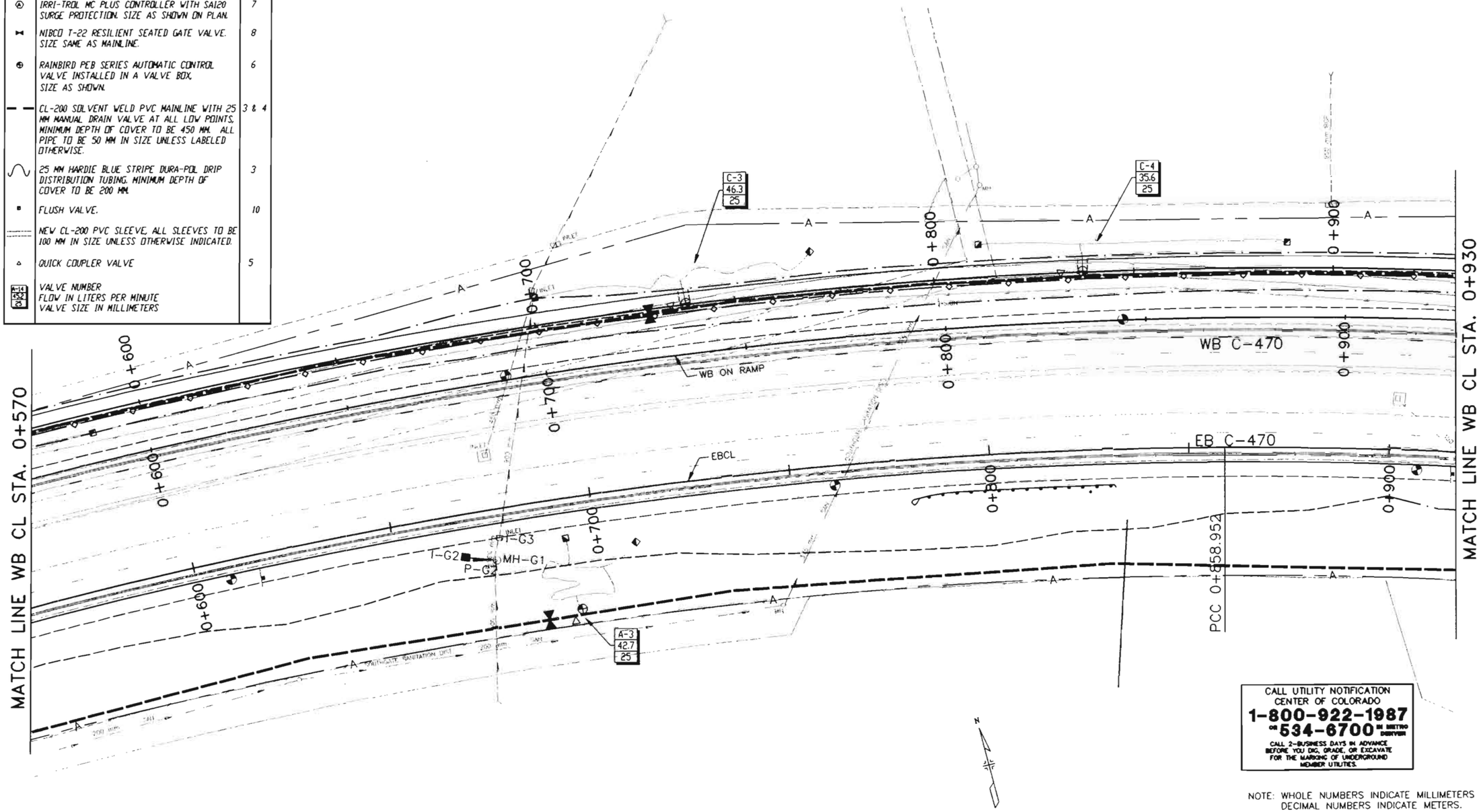

CALL UTILITY NOTIFICATION CENTER OF COLORADO
1-800-922-1987
OR **534-6700** IN METRO DENVER
CALL 2-BUSINESS DAYS IN ADVANCE BEFORE YOU DIG, GRADE, OR EXCAVATE FOR THE MARKING OF UNDERGROUND MEMBER UTILITIES.

NOTE: WHOLE NUMBERS INDICATE MILLIMETERS
DECIMAL NUMBERS INDICATE METERS.

Original Scale 1:500

Keesen Water Management, Inc.
420 South Marion Pkwy., #1502
Denver, Colorado 80209
Phone (303) 895-7711

FELSBURG HOLT & ULLEVIG

C-470/YOSEMITE INTERCHANGE

IRRIGATION SYSTEM PLAN SHEET
C-470 WBCL STA. 0+570 TO STA. 0+930

DATE	PROJECT NO.	DESIGNED BY LEK DRAWN BY LEK CHECKED BY LEK	SHEET NO. 3 OF 8 SHEETS	DRAWING NO
FEB 96	95-088			1-3

AS CONSTRUCTED			
NO REVISIONS	REVISED	VOID	12/3/96

FEDERAL RD REGION NO.	DIVISION	PROJ. NO.	SHEET NO.	TOTAL SHEETS
VIII	COLORADO	CC 4701-082	101	154

REVISIONS

LEGEND

SYMBOL	DESCRIPTION	METER TO DETAIL NO.
⊕	POINT OF CONNECTION. CONNECT TO EXISTING 25 MM PIPE DOWNSTREAM OF WATER METER APPROXIMATE DEPTH OF BURY 1.2 METERS.	1
■	32 MM FEBCO 825Y BACKFLOW PREVENTER WITH AGD-Y DRAIN.	2
Ⓐ	IRRI-TROL MC PLUS CONTROLLER WITH SA120 SURGE PROTECTION. SIZE AS SHOWN ON PLAN.	7
⊢	NIBCO T-22 RESILIENT SEATED GATE VALVE. SIZE SAME AS MAINLINE.	8
⊕	RAINBIRD PEB SERIES AUTOMATIC CONTROL VALVE INSTALLED IN A VALVE BOX. SIZE AS SHOWN.	6
— —	CL-200 SOLVENT WELD PVC MAINLINE WITH 25 MM MANUAL DRAIN VALVE AT ALL LOW POINTS, MINIMUM DEPTH OF COVER TO BE 450 MM. ALL PIPE TO BE 50 MM IN SIZE UNLESS LABELED OTHERWISE.	3 & 4
∿	25 MM HARDIE BLUE STRIPE DURA-POL DRIP DISTRIBUTION TUBING. MINIMUM DEPTH OF COVER TO BE 200 MM.	3
•	FLUSH VALVE.	10
·····	NEW CL-200 PVC SLEEVE, ALL SLEEVES TO BE 100 MM IN SIZE UNLESS OTHERWISE INDICATED.	
▲	QUICK COUPLER VALVE	5
	VALVE NUMBER FLOW IN LITERS PER MINUTE VALVE SIZE IN MILLIMETERS	

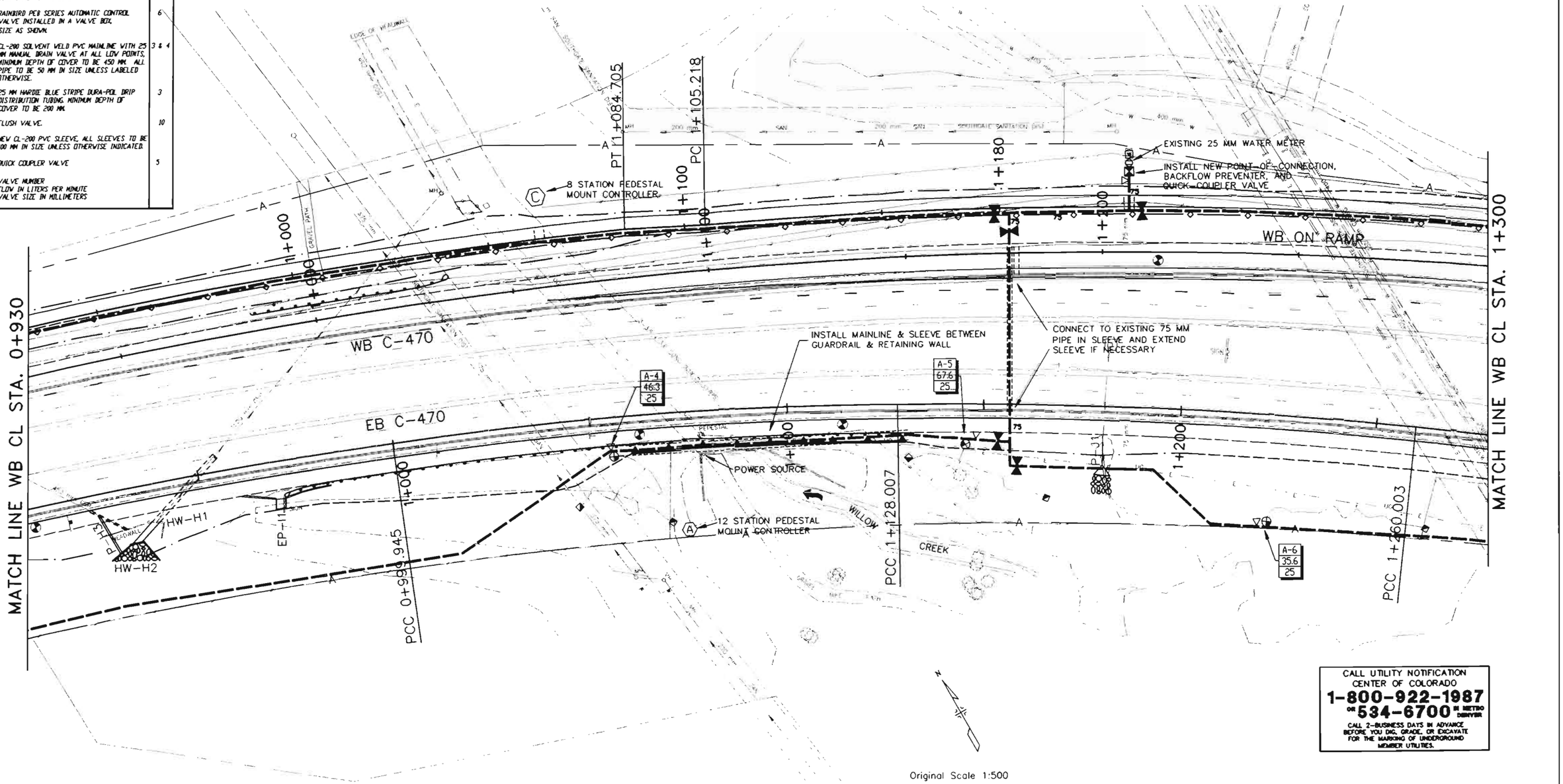

Original Scale 1:500

CALL UTILITY NOTIFICATION CENTER OF COLORADO
1-800-922-1987
OR **534-6700** IN METRO DENVER
CALL 2-BUSINESS DAYS IN ADVANCE BEFORE YOU DIG, GRADE, OR EXCAVATE FOR THE MARKING OF UNDERGROUND MEMBER UTILITIES.

NOTE: WHOLE NUMBERS INDICATE MILLIMETERS
DECIMAL NUMBERS INDICATE METERS.

Keesen Water Management, Inc.
420 South Marion Pkwy., #1502
Denver, Colorado 80209
Phone (303) 895-7711

FELSBURG HOLT & ULLEVIG

C-470/YOSEMITE INTERCHANGE

IRRIGATION SYSTEM PLAN SHEET
C-470 WBCL STA. 0+930 TO STA. 1+300

DATE	PROJECT NO.	DESIGNED BY LEK DRAWN BY LEK CHECKED BY LEK	SHEET NO 4 OF 8 SHEETS	DRAWING NO.
FEB 96	95-088			I-4

AS CONSTRUCTED					
NO REVISIONS		REVISED		VOID	12/3/96

FEDERAL RD REGION NO	DIVISION	PROJ. NO	SHEET NO.	TOTAL SHEETS
VIII	COLORADO	CC 4701-082	102	154

REVISIONS

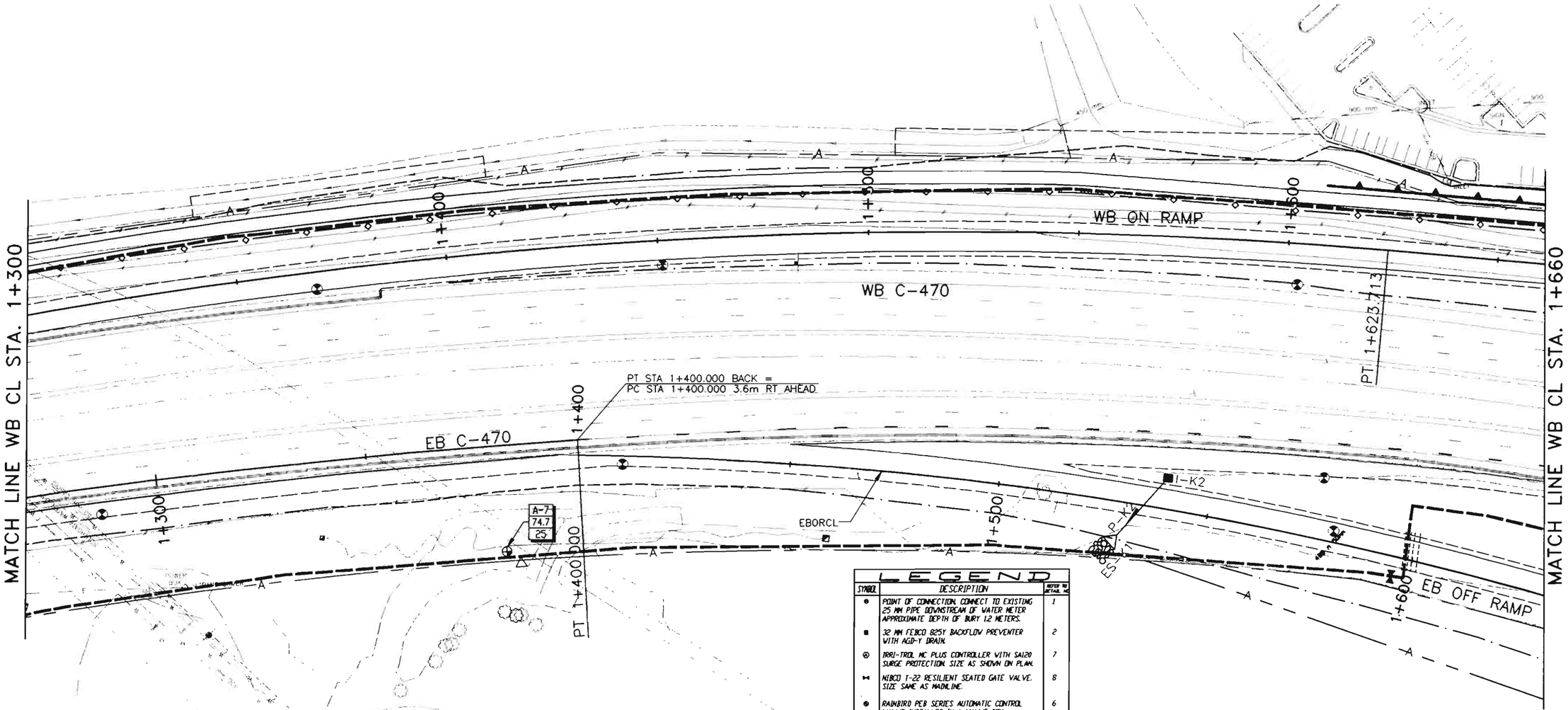

LEGEND

SYMBOL	DESCRIPTION	REFER TO DETAIL NO
●	POINT OF CONNECTION. CONNECT TO EXISTING 25 MM PIPE DOWNSTREAM OF WATER METER APPROXIMATE DEPTH OF BURY 1.2 METERS.	1
■	32 MM FEBCO 825Y BACKFLOW PREVENTER WITH AGD-Y DRAIN.	2
⊙	IRRI-TROL MC PLUS CONTROLLER WITH SA120 SURGE PROTECTION. SIZE AS SHOWN ON PLAN.	7
⋈	NIBCO T-22 RESILIENT SEATED GATE VALVE. SIZE SAME AS MAINLINE.	8
●	RAINBIRD PEB SERIES AUTOMATIC CONTROL VALVE INSTALLED IN A VALVE BOX. SIZE AS SHOWN.	6
— —	CL-200 SOLVENT WELD PVC MAINLINE WITH 25 MM MANUAL DRAIN VALVE AT ALL LOW POINTS. MINIMUM DEPTH OF COVER TO BE 450 MM. ALL PIPE TO BE 50 MM IN SIZE UNLESS LABELED OTHERWISE.	3 & 4
∿	25 MM HARDIE BLUE STRIPE DURA-POL DRIP DISTRIBUTION TUBING. MINIMUM DEPTH OF COVER TO BE 200 MM.	3
•	FLUSH VALVE.	10
----	NEV CL-200 PVC SLEEVE. ALL SLEEVES TO BE 100 MM IN SIZE UNLESS OTHERWISE INDICATED.	
▲	QUICK COUPLER VALVE	5
	VALVE NUMBER FLOW IN LITERS PER MINUTE VALVE SIZE IN MILLIMETERS	

CALL UTILITY NOTIFICATION CENTER OF COLORADO
1-800-922-1987
OR **534-6700** IN METRO DENVER
CALL 2-BUSINESS DAYS IN ADVANCE BEFORE YOU DIG, GRADE, OR EXCAVATE FOR THE MARKING OF UNDERGROUND MEMBER UTILITIES.

NOTE: WHOLE NUMBERS INDICATE MILLIMETERS
DECIMAL NUMBERS INDICATE METERS.

Original Scale 1:500

Keesen Water Management, Inc.
420 South Marion Pkwy., #1502
Denver, Colorado 80209
Phone (303) 695-7711

FELSBURG HOLT & ULLEVIG

C-470/YOSEMITE INTERCHANGE

IRRIGATION SYSTEM PLAN SHEET
C-470 WBCL STA. 1+300 TO STA. 1+660

DATE	PROJECT NO.	DESIGNED BY	SHEET NO.	DRAWING NO
FEB 96	95-088	LEK DRAWN BY LEK CHECKED BY LEK	5 OF 8 SHEETS	I-5

AS CONSTRUCTED			
NO REVISIONS ☐	REVISED ☐	VOID 12/31/96	

FEDERAL RD REGION NO.	DIVISION	PROJ. NO.	SHEET NO.	TOTAL SHEETS
VIII	COLORADO	CC 4701-082	103	154

REVISIONS		

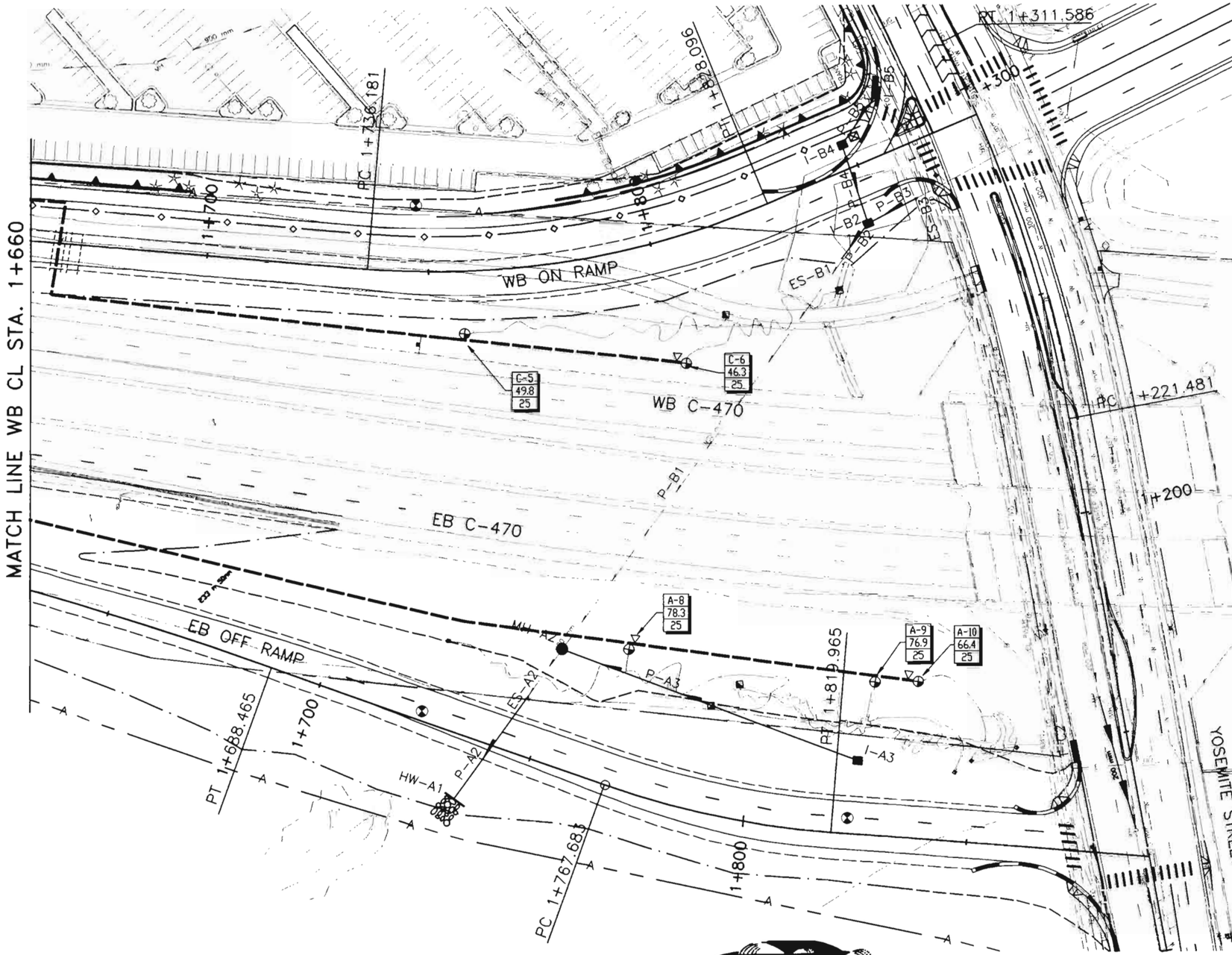

LEGEND

SYMBOL	DESCRIPTION	REFER TO DETAIL NO.
⊖	POINT OF CONNECTION. CONNECT TO EXISTING 25 MM PIPE DOWNSTREAM OF WATER METER APPROXIMATE DEPTH OF BURY 1.2 METERS.	1
⊠	32 MM FEBCO 825Y BACKFLOW PREVENTER WITH AGD-Y DRAIN.	2
Ⓐ	IRRI-TROL MC PLUS CONTROLLER WITH SA120 SURGE PROTECTION. SIZE AS SHOWN ON PLAN.	7
⋈	NIBCO T-22 RESILIENT SEATED GATE VALVE. SIZE SAME AS MAINLINE.	8
⊕	RAINBIRD PEB SERIES AUTOMATIC CONTROL VALVE INSTALLED IN A VALVE BOX, SIZE AS SHOWN.	6
— —	CL-200 SOLVENT WELD PVC MAINLINE WITH 25 MM MANUAL DRAIN VALVE AT ALL LOW POINTS, MINIMUM DEPTH OF COVER TO BE 450 MM. ALL PIPE TO BE 50 MM IN SIZE UNLESS LABELED OTHERWISE.	3 & 4
∿	25 MM HARDIE BLUE STRIPE DURA-POL DRIP DISTRIBUTION TUBING. MINIMUM DEPTH OF COVER TO BE 200 MM.	3
▪	FLUSH VALVE.	10
.....	NEW CL-200 PVC SLEEVE, ALL SLEEVES TO BE 100 MM IN SIZE UMLESS OTHERWISE INDICATED.	
△	QUICK COUPLER VALVE	5
A-14 / 45.2 / 25	VALVE NUMBER / FLOW IN LITERS PER MINUTE / VALVE SIZE IN MILLIMETERS	

CALL UTILITY NOTIFICATION CENTER OF COLORADO
1-800-922-1987 OR **534-6700** IN METRO DENVER
CALL 2-BUSINESS DAYS IN ADVANCE BEFORE YOU DIG, GRADE, OR EXCAVATE FOR THE MARKING OF UNDERGROUND MEMBER UTILITIES.

Original Scale 1:500

NOTE: WHOLE NUMBERS INDICATE MILLIMETERS
DECIMAL NUMBERS INDICATE METERS.

Keesen Water Management, Inc.
420 South Marion Pkwy. #1502
Denver, Colorado 80209
Phone (303) 605-7711

FELSBURG HOLT & ULLEVIG

C-470/YOSEMITE INTERCHANGE

IRRIGATION SYSTEM PLAN SHEETS
C-470 WBCL STA. 1+660 TO STA. 1+878.735

DATE	PROJECT NO.	DESIGNED BY LEK	SHEET NO 6	DRAWING NO.
FEB 96	95-088	DRAWN BY LEK	OF 8 SHEETS	I-6
		CHECKED BY LEK		

AS CONSTRUCTED		
NO REVISIONS 12-3-96	REVISED	VOID

FEDERAL RD REGION NO.	DIVISION	PROJ. NO	SHEET NO.	TOTAL SHEETS
VIII	COLORADO	CC 4701-082	104	154

REVISIONS		

(1) POINT OF CONNECTION DETAIL

© Copyright Keesen Water Management, Inc1995 Denver, Colorado

NOT TO SCALE

(2) BACKFLOW PREVENTER DETAIL

© Copyright Keesen Water Management, Inc1995 Denver, Colorado

NOT TO SCALE

(A) 200MM
(B) 500MM
(C) 460MM

SNAKE ALL PIPE IN TRENCHES PRIOR TO BACKFILL. PROVIDE A 600 MM EXPANSION LOOP FOR WIRE WHENEVER CHANGE OF DIRECTION IS GREATER THAN 40 DEG. OR LENGTH EXCEEDS 100 METERS (INSTALL WIRE CONNECTIONS IN 250 MM ROUND VALVE BOXES). TAPE AND BUNDLE WIRE AT 4 METER INTERVALS. USE 3M DBY, OR 3M DBR SPLICE KIT OR APPROVED EQUAL FOR WIRE CONNECTIONS.

(3) MAINLINE & WIRING DETAIL

© Copyright Keesen Water Management, Inc1995 Denver, Colorado

NOT TO SCALE

NOTE: DRAIN VALVE MUST BE INSTALLED BELOW MAINLINE

(4) MANUAL DRAIN VALVE DETAIL

© Copyright Keesen Water Management, Inc1995 Denver, Colorado

NOT TO SCALE

(5) QUICK COUPLER VALVE DETAIL

© Copyright Keesen Water Management, Inc1995 Denver, Colorado

NOT TO SCALE

(6) EMITTER CONTROL VALVE DETAIL

© Copyright Keesen Water Management, Inc1995 Denver, Colorado

NOT TO SCALE

NOTES:

CONTROLLER SIZE, LOCATION AND TYPE AS SHOWN ON IRRIGATION PLANS.

CONTROLLER PEDESTAL TO BE APPROPRIATE PEDESTAL AS RECOMMENDED BY CONTROLLER MANUFACTURER, UNLESS OTHERWISE INDICATED ON PLANS.

GROUND WIRE TO BE #8 COPPER WIRE CONNECTING WITHIN THE TOP 100 MM OF GROUND ROD. CONNECT TO ROD WITH UL APPROVED GROUND CLAMP (NO AUTOMOBILE OR SCREW CLAMPS)

EACH CONTROLLER IS TO HAVE TWO SEPARATE GROUND RODS. ONE FOR PRIMARY SURGE PROTECTION AND ONE FOR SECONDARY SURGE PROTECTION

CONTROLLERS SHALL BE INSTALLED WITH MANUFACTURER'S SECONDARY SURGE PROTECTION AND PRIMARY LIGHTNING ARRESTOR

(7) CONTROLLER DETAIL

© Copyright Keesen Water Management, Inc1995 Denver, Colorado

NOT TO SCALE

(8) ISOLATION VALVE DETAIL

© Copyright Keesen Water Management, Inc1995 Denver, Colorado

NOT TO SCALE

INSTALL ALL VALVE BOXES APPROX. 3 MM BELOW FINISH GRADE.

BRAND ALL VALVE BOX LIDS WITH IDENTIFICATION AS INDICATED ON INDIVIDUAL DETAILS.

CARSON VALVE BOX AND EXTENSION(S) OR APPROVED EQUAL.

MAINTAIN A MINIMUM OF 25 MM BETWEEN VALVE BOX LID AND TOP OF FLOW CONTROL HANDLE IN OPEN POSITION

INSTALL NON-WOVEN FILTER FABRIC BENEATH ALL VALVE BOXES, EXTEND A MIN. OF 150 MM FROM BOTTOM OF VALVE BOX AND ATTACH WITH DUCT TAPE.

INSTALL A MIN. OF ONE 300 MM EXTENSION FOR EACH VALVE BOX, ADDITIONAL EXTENSIONS AS REQUIRED.

BACKFILL AROUND VALVE BOX IN 150 MM LIFTS AND COMPACT SOIL, REPEAT BACKFILL IN 150 MM INCREMENTS UNTIL BACKFILL IS COMPLETE.

INSTALL 19 MM CRUSHED GRAVEL TO WITHIN 25 MM OF BOTTOM OF VALVE.

VALVE BOXES SHALL BE ALIGNED WITH ADJACENT SURFACES, OTHER VALVE BOXES AND GRADE CONTOURS.

DO NOT INSTALL VALVE BOXES AT LOW POINTS.

(9) VALVE BOX DETAIL

© Copyright Keesen Water Management, Inc1995 Denver, Colorado

NOT TO SCALE

(10) FLUSH VALVE DETAIL

© Copyright Keesen Water Management, Inc1995 Denver, Colorado

NOT TO SCALE

(11) AIR RELIEF VALVE DETAIL

© Copyright Keesen Water Management, Inc1995 Denver, Colorado

NOT TO SCALE

(12) TREE SUBSURFACE DRIP DETAIL

© Copyright Keesen Water Management, Inc1995 Denver, Colorado

NOT TO SCALE

(DETAIL) SHRUB SUBSURFACE DRIP DETAIL

© Copyright Keesen Water Management, Inc1995 Denver, Colorado

NOT TO SCALE

CALL UTILITY NOTIFICATION CENTER OF COLORADO
1-800-922-1987
OR 534-6700 IN METRO DENVER
CALL 2-BUSINESS DAYS IN ADVANCE BEFORE YOU DIG, GRADE, OR EXCAVATE FOR THE MARKING OF UNDERGROUND MEMBER UTILITIES.

Keesen Water Management, Inc.

FELSBURG HOLT & ULLEVIG

C-470/YOSEMITE INTERCHANGE

IRRIGATION SYSTEM DETAIL SHEET

DATE	PROJECT NO.	DESIGNED BY LEK / DRAWN BY LEK / CHECKED BY LEK	SHEET NO. 7 OF 8 SHEETS	DRAWING NO.
DEC 95	95-088			I-7

AS CONSTRUCTED			
NO REVISIONS ☐	REVISED 12-3-96	VOID ☐	

FEDERAL RD REGION NO.	DIVISION	PROJ. NO.	SHEET NO.	TOTAL SHEETS
VIII	COLORADO	CC 4701-082	105	154

REVISIONS		

TABULATION OF TRAFFIC ENGINEERING ITEMS

ITEM NO.	ITEM	UNIT	PROJECT TOTALS
202	REMOVAL OF PAVEMENT MARKING	m2	300
202	REMOVAL OF GROUND SIGN	EACH	7
202	SANDBLASTING	m2	593
210	RESET OVERHEAD SIGN STRUCTURE	EACH	1
210	RESET GROUND SIGN	EACH	6
503	DRILLED CAISSON (1072mm)	m	15.0
503	DRILLED CAISSON (1222mm)	m	6.7
613	50mm ELECTRICAL CONDUIT (PLASTIC)	m	540
613	50mm ELECTRICAL CONDUIT (PLASTIC)(INSTALL ONLY)	m	105
613	75mm ELECTRICAL CONDUIT (PLASTIC)	m	1105
613	LUMINAIRE HIGH PRESSURE SODIUM (250 WATT)	EACH	4
614	SIGN PANEL (CLASS I)	m2	25.1
614	SIGN PANEL (CLASS II)	m2	13.2
614	SIGN PANEL (CLASS III)	m2	71.6
614	TIMBER SIGN POST 89x89mm	m	16
614	TIMBER SIGN POST 140x140mm	m	82
614	STEEL SIGN POST (U-3)	m	25
614	STEEL SIGN POST (W200 x 27)	m	19.1
614	CONCRETE FOOTING (TYPE 3)	EACH	4
614	MODIFICATION OF SIGN LEGEND	L S	1
614	CANTILEVER STRUCTURE (7 TO LESS THAN 9 METER FRAME)	EACH	1
614	CANTILEVER STRUCTURE (9 TO LESS THAN 11 METER FRAME)	EACH	2
614	PEDESTRIAN SIGNAL FACE (400)	EACH	12
614	TRAFFIC SIGNAL FACE (300-300-300)	EACH	21
614	TRAFFIC SIGNAL FACE (300-300-300-300-300)	EACH	4
614	FIRE PREEMPTION UNIT AND TIMER	EACH	2
614	LOOP DETECTOR WIRE	m	840
614	TRAFFIC SIGNAL VEHICLE DETECTOR AMPLIFIER (LOOP TYPE)(4 CHANNEL)	EACH	5
614	TRAFFIC SIGNAL VEHICLE DETECTOR (MICRO TYPE)	EACH	24
614	TRAFFIC SIGNAL-LIGHT POLE STEEL (1 MAST ARM)(INSTALL ONLY)	EACH	2
614	TRAFFIC SIGNAL-LIGHT POLE STEEL (2 MAST ARM)(INSTALL ONLY)	EACH	2
614	TRAFFIC SIGNAL PEDESTAL POLE STEEL (INSTALL ONLY)	EACH	4
614	TRAFFIC SIGNAL CONTROLLER (TYPE 170)	EACH	2
627	PAVEMENT MARKING PAINT	L	20
627	EPOXY PAVEMENT MARKING	L	491
627	PREFORMED THERMOPLASTIC PAVEMENT MARKING (WORD SYMBOL)	m2	2.4
627	PREFORMED THERMOPLASTIC PAVEMENT MARKING (X WALK-STOP LINE)	m2	137
630	FLAGGING	Hr	2000
630	TRAFFIC CONTROL SUPERVISOR	DAY	120
630	TRAFFIC CONTROL INSPECTION	DAY	50
630	FLASHING BEACON (PORTABLE)	EACH	2
630	BARRICADE (TYPE 3M-A) (TEMPORARY)	EACH	13
630	CONSTRUCTION TRAFFIC SIGN (PANEL SIZE A)	EACH	21
630	CONSTRUCTION TRAFFIC SIGN (PANEL SIZE B)	EACH	49
630	CONSTRUCTION TRAFFIC SIGN (SPECIAL)	m2	9.90
630	ADVANCE WARNING FLASHING OR SEQUENCING ARROW PANEL (C TYPE)	EACH	6
630	DRUM CHANNELIZING DEVICE	EACH	120
630	CONCRETE BARRIER (TEMPORARY)	m	3500
630	TRAFFIC CONE	EACH	200
630	MOBILE PAVEMENT MARKING ZONE	DAY	4
630	IMPACT ATTENUATOR (SAND FILLED PLASTIC BARREL) (TEMPORARY)	EACH	3

FELSBURG HOLT & ULLEVIG

C-470/YOSEMITE INTERCHANGE

TABULATION OF TRAFFIC ENGINEERING ITEMS

DATE	PROJECT NO.	DESIGNED BY JGF	DRAWN BY SS	CHECKED BY RRF	SHEET NO. 1 OF 1 SHEETS	DRAWING NO. TE-1
FEB 96	95-088					

AS CONSTRUCTED			
NO REVISIONS ☐	REVISED 12-3-96	VOID ☐	

FEDERAL RD REGION NO.	DIVISION	PROJ. NO.	SHEET NO.	TOTAL SHEETS
VIII	COLORADO	CC 4701-082	106	154

REVISIONS		

TABULATION OF SIGNS

SIGN NO.	SIGN CODE	STATION	SIGN * PANEL SIZE	BACK-GROUND COLOR	REMOVE GROUND SIGN (EACH)	RESET SIGN PANEL (EACH)	RESET GROUND SIGN (EACH)	NO. OF POSTS	LENGTH OF POST (m)	POST TYPE (METERS) 89mm x 89mm TIMBER	140mm x 140mm TIMBER	W200 x 22 BEAM	U3 STEEL	CONC. FOOTING TYPE (EACH) 1	2	3	4	5	6	7	8	SIGN PANEL (SQ. METERS) CLASS I	CLASS II	CLASS III
1	W4-3	SEE DWG. NO SS-5	1200 x 1200	YELLOW				1	4.25		4.25												1.44	
2	SEE TABULATION OF OVERHEAD SIGNS																							
3	SEE TABULATION OF OVERHEAD SIGNS																							
4	SPECIAL	0+575, RT., C-470	3.3m x 2.4m	GREEN				2	4.9/4.4			9.3				2								7.92
5A	R3-7aR	0+585, LT., C-470	1500 x 1500	WHITE				1	4.5		5.0												2.25	
5B	SPECIAL		1200 x 400	WHITE																			0.48	
6	M3-2/M1-6A	0+620, RT., C-470					1																	
7	SEE TABULATION OF OVERHEAD SIGNS																							
8	R2-1	0+920, RT., C-470					1																	
9	D10-2(25)	1+025, LT., C-470					1																	
10	D10-2(25)	1+025, RT., C-470					1																	
11	M3-4/M1-6A	1+080, LT., C-470					1																	
12	SPECIAL	1+400, RT., C-470	4.5m x 1.8m	GREEN				2	4.8/5.0			9.8				2								8.1
13	R16-1/SPECIAL	1+360, LT., C-470					1																	
14	W13-2(45)	1+360, RT., C-470	1200 x 1500	YELLOW				1	4.25		4.25												1.80	
15	W4-2	1+482, LT., C-470			1																			
16	W4-1(R)	1+565, LT., C-470	1200 x 1200	YELLOW				1	4.25		4.25												1.44	
17	SPECIAL	1+525, LT., OFF RAMP	1.5m x 1.5m	GREEN				1	5.0		5.0													2.25
18	W3-3	1+550, RT., OFF RAMP	900 x 900	YELLOW				1	4.25		4.25												0.81	
19A	SPECIAL	1+835, RT., OFF RAMP	1.5m x 1.2m	GREEN				1	5.0		5.0													1.80
19B	R5-1a		900 x 600	RED					MOUNT WITH 19A														0.54	
20	R5-1a	1+835, LT., OFF RAMP	900 x 600	RED				1	5.0		5.0												0.54	
21	W9-1/SPECIAL	1+945, LT., C-470			1																			
22	P4-7	1+275, LT., YOSEMITE ST.	600 x 750	WHITE				1	4.0	4.0													0.45	
23A	R5-1	1+852, LT., OFF RAMP	750 x 750	WHITE				1	5.0		5.0												0.56	
23B	R6-1		900 x 300	BLACK					MOUNT WITH 23A														0.27	
23C	R6-1		900 x 300	BLACK					MOUNT WITH 23A														0.27	
24A	R5-1	1+852, RT., OFF RAMP	750 x 750	WHITE				1	5.0		5.0												0.56	
24B	R6-1		900 x 300	BLACK					MOUNT WITH 24A														0.27	
24C	R6-1		900 x 300	BLACK					MOUNT WITH 24A														0.27	
25	R4-7	1+152, LT., YOSEMITE ST	600 x 750	WHITE				1	4.0	4.0													0.45	
26	R7-1	1+264, RT., YOSEMITE ST.			1																			
27A	M3-4	1+267, RT., YOSEMITE ST.	600 x 300	WHITE				1	5.0		5.0												0.18	
27B	M1-6A		600 x 600	WHITE					MOUNT WITH 27A														0.36	
27C	M6-1(L)		525 x 400	WHITE					MOUNT WITH 27A														0.21	
28	R7-1	1+302, LT., YOSEMITE ST.			1																			
29	W4-2(L)	1+816, LT., ON RAMP	1200 x 1200	YELLOW				1	4.25		4.25												1.44	
30	R1-2	1+848, LT., ON RAMP	900x900x900	WHITE				1	4.25		4.25												0.36	
31	R3-7(R)	1+352, LT., YOSEMITE ST.	750 x 750	WHITE				1	4.0	4.0													0.56	
32	R3-7(R)	1+443, LT., YOSEMITE ST.	750 x 750	WHITE				1	4.0	4.0													0.56	
33A	M3-4	1+380, LT., YOSEMITE ST.	600 x 300	WHITE				1	5.0		5.0												0.18	
33B	M1-6A		600 X 600	WHITE					MOUNT WITH 33A														0.36	
33C	M6-1(R)		525 x 400	WHITE					MOUNT WITH 33A														0.21	
34	SEE TABULATION OF OVERHEAD SIGNS																							
35	SEE TABULATION OF OVERHEAD SIGNS																							
36	W1-7	1+126, RT., YOSEMITE ST.	1200 x 600	YELLOW				2	5.0/5.0		10.0												0.72	
37A	M3-4	1+470, LT., YOSEMITE ST.	600 x 300	WHITE				1	5.0		5.0												0.18	
37B	M1-6A		600 X 600	WHITE					MOUNT WITH 37A														0.36	
37C	M6-1(R)		525 x 400	WHITE					MOUNT WITH 37A														0.21	
SUBTOTAL THIS SHEET					4		6	25		16.0	81.5	19.1					4					7.37	16.92	20.07

* DIMENSIONS IN MILLIMETERS UNLESS OTHERWISE NOTED.

FELSBURG HOLT & ULLEVIG

C-470/YOSEMITE INTERCHANGE

TABULATION OF SIGNS

DATE	PROJECT NO.	DESIGNED BY JGF	DRAWN BY SS	CHECKED BY RRF	SHEET NO. 1 OF 2 SHEETS	DRAWING NO.
FEB 96	95-088					SS-3

AS CONSTRUCTED			
NO REVISIONS ☐	REVISED 12-3-96	VOID ☐	

FEDERAL RD REGION NO.	DIVISION	PROJ. NO.	SHEET NO.	TOTAL SHEETS
VIII	COLORADO	CC 4701-082	107	454

REVISIONS		

TABULATION OF SIGNS

SIGN NO.	SIGN CODE	STATION	SIGN PANEL SIZE	BACK-GROUND COLOR	REMOVE GROUND SIGN (EACH)	RESET SIGN PANEL (EACH)	RESET GROUND SIGN (EACH)	NO. OF POSTS	LENGTH OF POST	POST TYPE (METERS) 89mm x 89mm TIMBER	140mm x 140mm TIMBER	W200 x 27 BEAM	U-3 STEEL	CONC. FOOTING TYPE (EACH) 1	2	3	4	5	6	7	8	SIGN PANEL (SQ. METERS) CLASS I	CLASS II	CLASS III
38	SPECIAL	0+985, RT., C-470			1																			
39	R3-1		600 x 600	WHITE					MOUNT ON MAST ARM													0.36		
40	SPECIAL		900 x 900	WHITE					MOUNT ON MAST ARM													0.81		
41	R3-5R		750 x 900	WHITE					MOUNT ON PED. POLE													0.68		
42	R9-2		300 x 450	WHITE					MOUNT ON PED. POLE													0.14		
43	R9-2		300 x 450	WHITE					MOUNT ON MAST ARM													0.14		
44	R3-1		600 x 600	WHITE					MOUNT ON MAST ARM													0.36		
45	R3-5L		750 x 900	WHITE					MOUNT ON MAST ARM													0.68		
46	R3-5L		750 x 900	WHITE					MOUNT ON MAST ARM													0.68		
47	SPECIAL		750 x 900	WHITE					MOUNT ON MAST ARM													0.68		
48	R3-5R		750 x 900	WHITE					MOUNT ON MAST ARM													0.68		
49	SPECIAL		900 x 900	WHITE					MOUNT ON MAST ARM													0.81		
50	SPECIAL	0+185, LT., C-470			1																			
51	R3-7aR	0+185, LT., C-470	1500 x 1500	WHITE					MOUNT ON CANTILEVER SIGN POST														2.25	
52	SPECIAL	0+795, LT., C-470			1																			
53	OM-3L	0+958, RT., YOSEM. ST.	300 x 900	YELLOW/BLACK				1	3.05				3.05									0.27		
54	OM-3L	0+956, RT., YOSEM. ST.	300 x 900	YELLOW/BLACK				1	3.05				3.05									0.27		
55	OM-3L	0+954, RT., YOSEM. ST.	300 x 900	YELLOW/BLACK				1	3.05				3.05									0.27		
56	OM-3L	0+952, RT., YOSEM. ST.	300 x 900	YELLOW/BLACK				1	3.05				3.05									0.27		
57	OM-3R	0+920, RT., YOSEM. ST.	300 x 900	YELLOW/BLACK				1	3.05				3.05									0.27		
58	OM-3R	0+922, RT., YOSEM. ST.	300 x 900	YELLOW/BLACK				1	3.05				3.05									0.27		
59	OM-3R	0+924, RT., YOSEM. ST.	300 x 900	YELLOW/BLACK				1	3.05				3.05									0.27		
60	OM-3R	0+926, RT., YOSEM. ST.	300 x 900	YELLOW/BLACK				1	3.05				3.05									0.27		
61	SEE TABULATION OF OVERHEAD SIGNS																							
SUBTOTAL THIS SHEET					3	-	-	8		-	-	-	24.4								-	8.18	2.25	-
TOTAL (ALL SHEETS)					7	6	33			16.0	80.5	19.1	24.4								4	10.39	13.17	20.07

FELSBURG HOLT & ULLEVIG

C-470/YOSEMITE INTERCHANGE

TABULATION OF SIGNS

DATE	PROJECT NO.	DESIGNED BY JGF	DRAWN BY SS	CHECKED BY RRF	SHEET NO. 2 OF 2 SHEETS	DRAWING NO.
FEB 96	95-088					SS-4

AS CONSTRUCTED				
NO REVISIONS		REVISED 12-3-96	VOID	

FEDERAL RD REGION NO.	DIVISION	PROJ. NO.	SHEET NO.	TOTAL SHEETS
VIII	COLORADO	CC 4701-082	108	154

REVISIONS		

TABULATION OF PAVEMENT MARKINGS

STATION	LOCATION	PAVEMENT MARKING LINES (LINEAR METERS)									(SQUARE METERS)		
		EDGE		LANE	CENTER	CHANNELIZING		CROSSHATCH					
		WHITE SOLID 100mm	YELLOW SOLID 100mm	WHITE BROKEN 100mm	YELLOW SOLID 100mm	WHITE SOLID 200mm	WHITE LANE DROP 200mm	WHITE SOLID 200mm		STOP BAR 600mm	ARROW *	CROSS-WALK WHITE SOLID *	STOP BAR *
0+113 TO 0+450	WB C-470	337	337	85			85						
0+166 TO 0+450	EB C-470	284	284	142									
0+450 TO 1+150	WB C-470	700	700	258			115						
0+450 TO 1+150	EB C-470	700	700	350									
1+150 TO 1+510	WB C-470	593	360	180		233							
1+150 TO 1+735	EB C-470	515	585	293		70							
1+383 TO 1+865	WB ON RAMP	457	475	10									
1+450 TO 1+875	EB OFF RAMP	408	320	40		70					2.4		
1+000 TO 1+200	YOSEMITE STREET			95	475	20						30	18
1+200 TO 1+468	YOSEMITE STREET			110	330	560		60				63	26
TOTAL (METERS)		3994	3761	1563	805	953	200	60					
TOTAL (SQUARE METERS)											2.4	93	44
TOTAL (LITERS)		156	147	61	32	74	16	5			-	-	-

* PREFORMED THERMOPLASTIC PAVEMENT MARKING

NOTE:

1. FOR DETAILS OF PAVEMENT MARKING LINES AND LINE PLACEMENT, SEE STRIPING PLANS AND STANDARD S-627-1
2. ALL CONCRETE PAVEMENT SURFACES TO BE COVERED WITH PERMANENT PAVEMENT MARKING MATERIALS SHALL BE SANDBLASTED PRIOR TO PLACEMENT OF ANY PRIMER OR PAVEMENT MARKING MATERIAL. THE WORK SHALL BE PERFORMED IN ACCORDANCE WITH SECTION 202.05 OF THE STANDARD SPECIFICATIONS. IT IS ESTIMATED THAT 593 m² OF SANDBLASTING SHALL BE REQUIRED.
3. ALL STOP BAR AND CROSSWALK QUANTITIES ARE INCLUDED WITH THE YOSEMITE STREET QUANTITIES.

SUMMARY OF PAVEMENT MARKING QUANTITIES

COLOR	EPOXY PAVEMENT MARKING (LITERS)	PREFORMED THERMOPLASTIC PVM'T MARKING (M^2) (XWALK-STOP LINE)	(WORD-SYMBOL)
YELLOW	179	-	-
WHITE	312	137	2.4
TOTAL	491	137	2.4

FELSBURG HOLT & ULLEVIG

C-470/YOSEMITE INTERCHANGE				
TABULATION OF PAVEMENT MARKINGS				
DATE FEB 96	PROJECT NO. 95-088	DESIGNED BY JGF DRAWN BY SS CHECKED BY RRF	SHEET NO. 1 OF 1 SHEETS	DRAWING NO. SS-1

AS CONSTRUCTED			
NO REVISIONS ☐	REVISED ☐	VOID ☐	

FEDERAL RD REGION NO	DIVISION	PROJ. NO.	SHEET NO.	TOTAL SHEETS
VIII	COLORADO	CC 4701-082	109	154

REVISIONS		

TABULATION OF OVERHEAD SIGNS

SIGN NO	STATION	SIGN PANEL SIZE (METERS)	BACK-GROUND COLOR	NO. OF POSTS	TYPE OF POSTS	STRUCTURE TYPE	FRAME SIZE	STRUCTURE NUMBER	SIGN PANEL CLASS I (m2)	SIGN PANEL CLASS II (m2)	SIGN PANEL CLASS III (m2)	TYPE OF FOOTING	PAYLENGTH L/R	COMMENTS
2A	0+185 LT., C-470	3.6 x 2.4	GREEN	1	406mm	CANTILEVER		F-17-KP			8.64	1067mm DIAMETER PILE	4.3m	
2B		3.5 x 0.75	YELLOW						2.63					
3A	0+825, RT., C-470	4.2 x 4.2	GREEN	1	559mm	CANTILEVER		F-17-KN			17.64	1219mm DIAMETER PILE	8.7m	
3B		4.05 x 0.95	YELLOW						3.85					
7A	0+805 LT., C-470	4.2 x 3.0	GREEN	1	508mm	CANTILEVER		F-17-KO			12.60	1067mm DIAMETER PILE	6.2m	
7B		4.05 x 0.75	YELLOW						3.04					
34	1104+00 *					BUTTERFLY								MODIFY SIGN LEGEND
35	1224+00 *					BUTTERFLY								MODIFY SIGN LEGEND
61	1+145 EBCL, C-470	6.0 x 2.1	GREEN			BUTTERFLY		F-17-KE			12.60	1067mm DIAMETER CAISSON	4.9m	RESET SIGN STRUCTURE ONTO NEW CAISSON FOUNDATION, REPLACE EAST-BOUND SIGN PANEL
TOTALS									9.52		51.48		21.7m **	

* EXISTING C-470 STATIONING

** PAID AS 15.0 M OF 1067 MM DRILLED CAISSON AND 6.7 M OF 1222 MM DRILLED CAISSON.

NOTES FOR OVERHEAD SIGNS

1. Panels for overhead signs shall be sheet aluminum, See S-614-4. See Department Standard "Class 1 Groung Sign Installation" for Class 1 Panel requirements, maximum thickness is reduced to 2mm.
2. All reflective sheeting shall be ASTM D4956, Type III
3. Legend and border for green background signs shall be systems 1, 2 or 3 and for yellow background signs shall be systems 4. See Section 713 of the standard specifications.
4. Overhead signs shall have the structure number stenched on the post in accordance with Department Standard "Structure Number Installation".
5. It is estimated that 730m of 75mm electrical conduit will be required to supply power to the cantilever signs.

FELSBURG HOLT & ULLEVIG

C-470/YOSEMITE INTERCHANGE

TABULATION OF OVERHEAD SIGNS

DATE	PROJECT NO.	DESIGNED BY JGE	DRAWN BY SS	CHECKED BY RRF	SHEET NO. 1 OF 1 SHEETS	DRAWING NO.
FEB 96	95-088					SS-2

AS CONSTRUCTED					
NO REVISIONS ☐	REVISED 12-3-96	VOID ☐			

FEDERAL RD REGION NO.	DIVISION	PROJ. NO.	SHEET NO.	TOTAL SHEETS
VIII	COLORADO	CC 4701-082	110	154

REVISIONS		

TABULATION OF CONSTRUCTION TRAFFIC CONTROL DEVICES

SIGNS						OTHER DEVICES		
SIGN CODE	LEGEND	DIMENSIONS	PANEL SIZE A (EACH)	PANEL SIZE B (EACH)	PANEL SIZE (SPECIAL) M2	ITEM	QUANTITY	UNIT
R9-3a	NO PEDESTRIANS (SYMBOL)	600 X 600	2			REMOVAL OF PAVEMENT MARKING	300	m2
R5-6	NO BICYCLES (SYMBOL)	600 x 600	2			PAVEMENT MARKING PAINT *	20	L
R11-2	ROAD CLOSED	1200 x 750		3		FLAGGING	2000	HOUR
W1-7	ARROW (SYMBOL)	1200 x 600	3			TRAFFIC CONTROL SUPERVISOR	120	DAY
W4-2(R)	LANE REDUCTION TRANSITION (SYMBOL)	1200 x 1200		2		TRAFFIC CONTROL INSPECTION	50	DAY
W4-2(L)	LANE REDUCTION TRANSITION (SYMBOL)	1200 x 1200		6		BARRICADE TYPE (3M-A)(TEMP)	13	EACH
W4-4b(R)	REVERSE CURVE (SYMBOL)(DOUBLE LANE)	1200 x 1200		1		FLASH ARROW PANEL (C TY)	6	EACH
W5-1	ROAD NARROWS	1200 x 1200		1		DRUM CHANNELIZING DEVICE	120	EACH
W20-1	ROAD WORK (DIST.)	1200 x 1200		16		CONCRETE BARRIER (TEMPORARY)	3500	m
W20-5	LANE CLOSED (DIST.)	1200 x 1200		3		TRAFFIC CONES	200	EACH
W20-7a	FLAGGER (SYMBOL)	1200 x 1200		2		MOBILE PAVEMENT MARKING ZONE	4	DAY
W20-1	ROAD WORK AHEAD	1200 x 1200		5		IMPACT ATTEN (SANDFL)(TEMP)	3	EACH
						FLASHING BEACON (PORTABLE)	2	EACH
G20-10	THANK YOU	1200 x 1200		6				
D11-1	BIKE ROUTE	600 x 600	7					
M4-9L	DETOUR	750 x 600	4					
M4-9R	DETOUR	750 x 600	3					
CONSTR. TRAFFIC SIGN SPECIAL	ROAD WORK ON ACRES GREEN DR.	1500 X 1200			7.20			
SPECIAL	RIGHT SHOULDER CLOSED AHEAD	1200 x 1200		4				
SPECIAL	ROAD WORK ON C-470 1 MILE	1800 x 1500			2.70			
SIGN TOTALS			21	49	9.90			

CONSTRUCTION SIGNING NOTES

BASED UPON SIGHT DISTANCE AND OTHER CONSIDERATIONS, THE FINAL LOCATION OF THESE SIGNS IS SUBJECT TO THE APPROVAL BY THE PROJECT ENGINEER.

SEE CASE V, XII, AND XIII OF STANDARD S-630-1 OF THE COLORADO STANDARD PLANS FOR BASIC PLACEMENT DETAILS OF THE CONSTRUCTION TRAFFIC CONTROL DEVICES. SEE ALSO DETAIL SHEETS FOR CONSTRUCTION TRAFFIC CONTROL DEVICE PLACEMENT.

* PAVEMENT MARKING PAINT INCLUDES 13 L OF WHITE AND 7 L OF YELLOW FOR A TOTAL OF 20 LITERS.

NOTE: WHOLE NUMBERS INDICATE MILLIMETERS.
DECIMAL NUMBERS INDICATE METERS.

FELSBURG HOLT & ULLEVIG

C-470/YOSEMITE INTERCHANGE

CONSTRUCTION TRAFFIC CONTROL TAB

DATE	PROJECT NO.	DESIGNED BY JGF / DRAWN BY / CHECKED BY RRF	SHEET NO. 1 OF 7 SHEETS	DRAWING NO.
FEB 96	95-088			TC-1

AS CONSTRUCTED				
NO REVISIONS [12-3-96]	REVISED [ ]	VOID [ ]		

FEDERAL RD REGION NO.	DIVISION	PROJ. NO.	SHEET NO.	TOTAL SHEETS
VIII	COLORADO	CC 4701-082	111	154

REVISIONS		

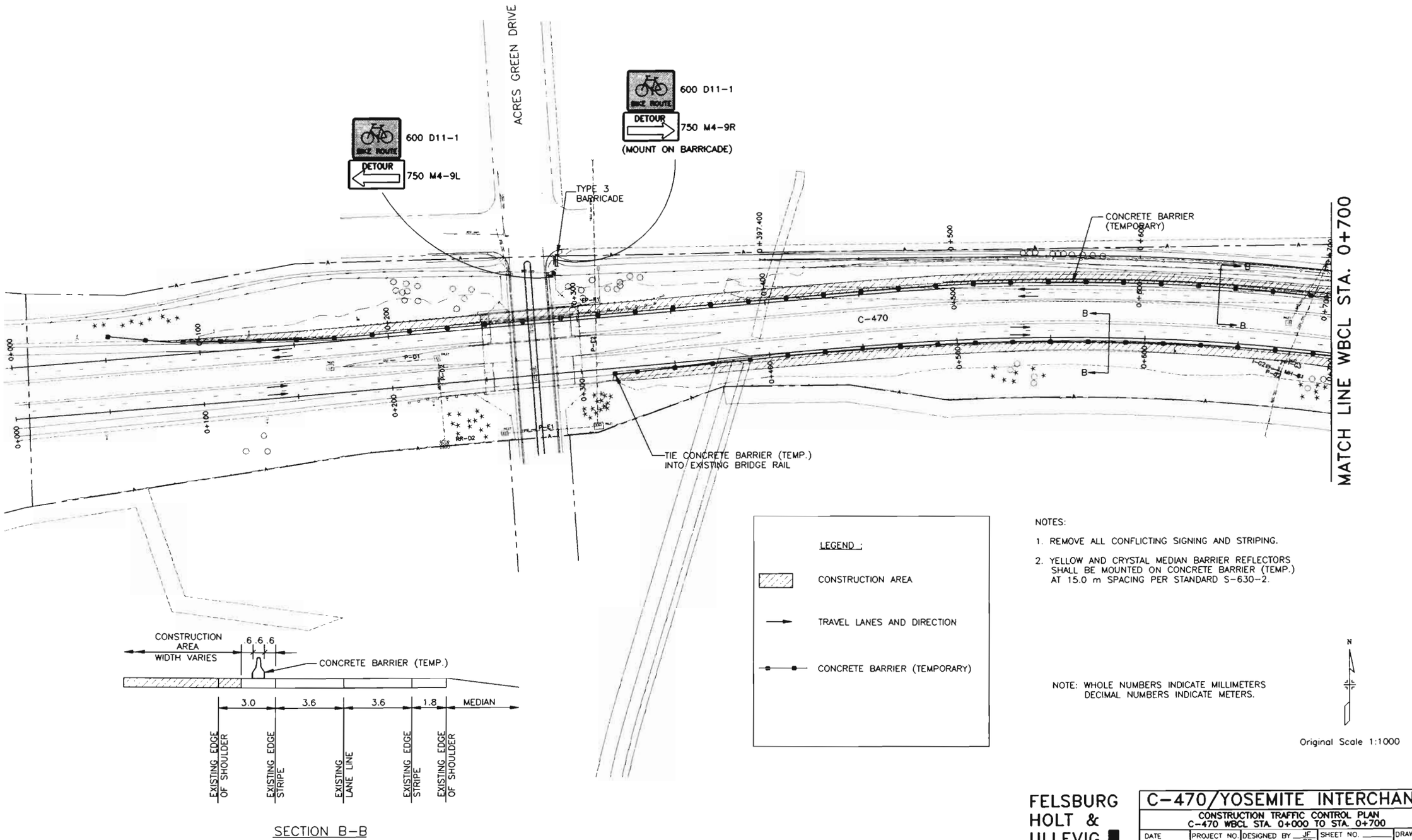

SECTION B-B

LEGEND :

- CONSTRUCTION AREA
- TRAVEL LANES AND DIRECTION
- CONCRETE BARRIER (TEMPORARY)

NOTES:

1. REMOVE ALL CONFLICTING SIGNING AND STRIPING.
2. YELLOW AND CRYSTAL MEDIAN BARRIER REFLECTORS SHALL BE MOUNTED ON CONCRETE BARRIER (TEMP.) AT 15.0 m SPACING PER STANDARD S-630-2.

NOTE: WHOLE NUMBERS INDICATE MILLIMETERS
DECIMAL NUMBERS INDICATE METERS.

N

Original Scale 1:1000

FELSBURG HOLT & ULLEVIG

C-470/YOSEMITE INTERCHANGE

CONSTRUCTION TRAFFIC CONTROL PLAN C-470 WBCL STA. 0+000 TO STA. 0+700

DATE	PROJECT NO.	DESIGNED BY	DRAWN BY	CHECKED BY	SHEET NO.	OF SHEETS	DRAWING NO.
FEB 96	95-088	JF	SS	DB			TC-2

AS CONSTRUCTED					
NO REVISIONS 12-3-96	REVISED		VOID		

FEDERAL RD REGION NO	DIVISION	PROJ. NO.	SHEET NO.	TOTAL SHEETS
VIII	COLORADO	CC 4701-082	112	134

REVISIONS		

MATCH LINE WBCL STA. 0+700

CONCRETE BARRIER (TEMPORARY)

C-470

HW-N1

EP-1

MATCH LINE WBCL STA. 1+340

N

Original Scale 1:1000

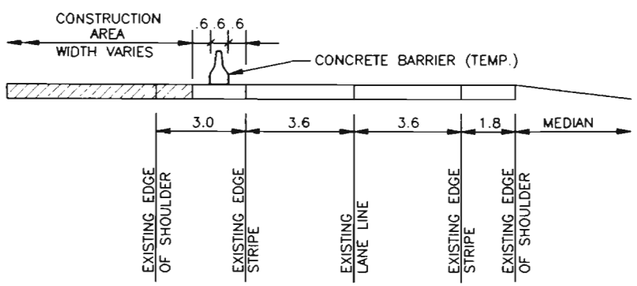

SECTION A-A

LEGEND :

CONSTRUCTION AREA

TRAVEL LANES AND DIRECTION

CONCRETE BARRIER (TEMPORARY)

NOTES:

1. REMOVE ALL CONFLICTING SIGNING AND STRIPING.
2. YELLOW AND CRYSTAL MEDIAN BARRIER REFLECTORS SHALL BE MOUNTED ON CONCRETE BARRIER (TEMP.) AT 15.0 m SPACING PER STANDARD S-630-2.

NOTE: WHOLE NUMBERS INDICATE MILLIMETERS
DECIMAL NUMBERS INDICATE METERS.

FELSBURG HOLT & ULLEVIG

C-470/YOSEMITE INTERCHANGE

CONSTRUCTION TRAFFIC CONTROL PLAN C-470 WBCL STA. 0+700 TO STA. 1+340

DATE	PROJECT NO.	DESIGNED BY JF	SHEET NO.	DRAWING NO.
FEB 96	95-088	DRAWN BY SS	OF SHEETS	TC-3
		CHECKED BY DB		

AS CONSTRUCTED			
NO REVISIONS 12-3-96	REVISED		VOID

FEDERAL RD REGION NO.	DIVISION	PROJ. NO.	SHEET NO.	TOTAL SHEETS
VIII	COLORADO	CC 4701-082	113	154

REVISIONS		

LEGEND :

- CONSTRUCTION AREA
- TRAVEL LANES AND DIRECTION
- CONCRETE BARRIER (TEMPORARY)

NOTES:

1. REMOVE ALL CONFLICTING SIGNING AND STRIPING.
2. YELLOW AND CRYSTAL MEDIAN BARRIER REFLECTORS SHALL BE MOUNTED ON CONCRETE BARRIER (TEMP.) AT 15.240 m SPACING PER STANDARD S-630-2.

NOTE: WHOLE NUMBERS INDICATE MILLIMETERS
DECIMAL NUMBERS INDICATE METERS.

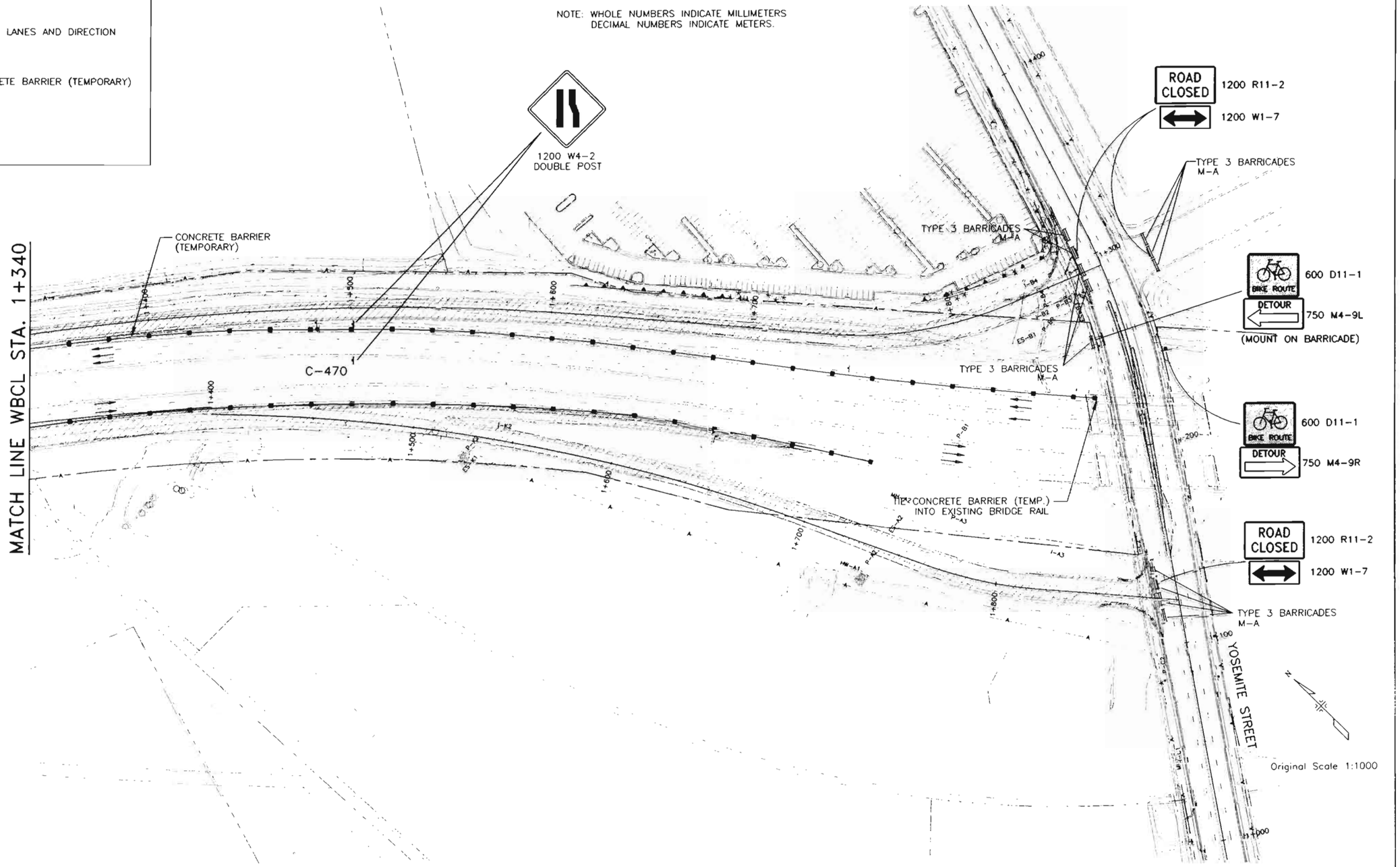

FELSBURG HOLT & ULLEVIG

C-470/YOSEMITE INTERCHANGE

CONSTRUCTION TRAFFIC CONTROL PLAN
C-470 WBCL STA. 1+340 TO STA. 1+878.735

DATE	PROJECT NO.	DESIGNED BY JF	DRAWN BY SS	CHECKED BY DB	SHEET NO.	OF SHEETS	DRAWING NO.
FEB 96	95-088						TC-4

AS CONSTRUCTED			
NO REVISIONS 12-3-96	REVISED		VOID

FEDERAL RD REGION NO.	DIVISION	PROJ. NO.	SHEET NO.	TOTAL SHEETS
VIII	COLORADO	CC 4701-082	114	154

REVISIONS

DESIGN VELOCITY 45 MPH (72 km/h)

		1800 LB. VEHICLE			4500 LB. VEHICLE		
ROW	SAND MASS (kg)	EXIT VEH (km/h)	AVE. G'S FOR ROW	IMPULSE TIME	EXIT VEH (km/h)	AVE. G'S FOR ROW	IMPULSE TIME
0		45.0			45.0		
1	400	36.8	7.5	0.05	41.3	2.8	0.05
2	700	26.5	7.3	0.06	35.8	3.8	0.05
3	1400	14.9	5.4	0.10	27.3	4.7	0.06
4	2800	5.8	2.1	0.20	16.8	4.1	0.09
5	2800	2.3	.3	0.50	10.4	1.5	0.15
6	2800	.9	.0	1.29	6.4	0.7	0.24
7	4200	.3	.0	3.52	3.3	0.3	0.42

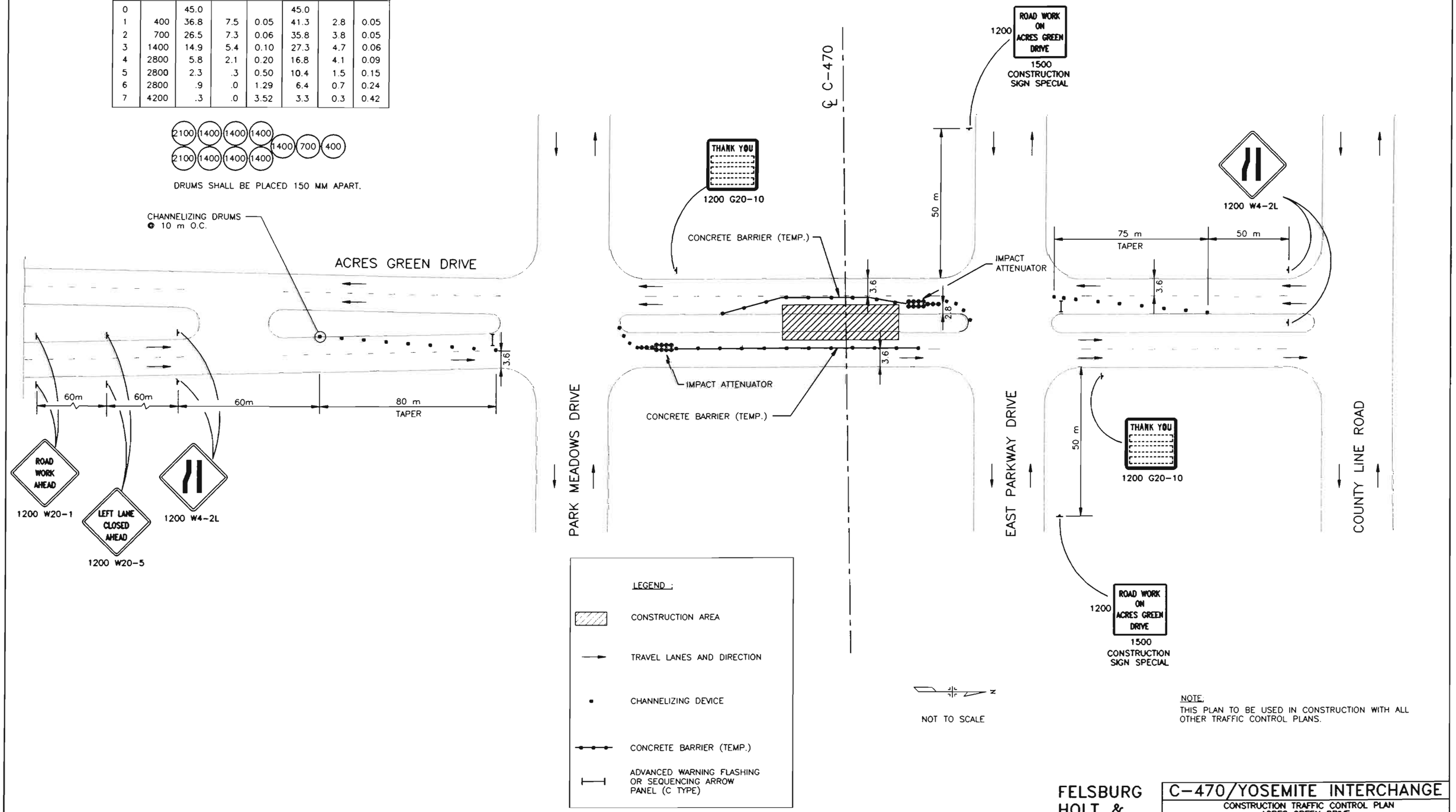

NOTE:
THIS PLAN TO BE USED IN CONSTRUCTION WITH ALL OTHER TRAFFIC CONTROL PLANS.

FELSBURG HOLT & ULLEVIG

C-470/YOSEMITE INTERCHANGE

CONSTRUCTION TRAFFIC CONTROL PLAN
ACRES GREEN DRIVE

DATE	PROJECT NO.	DESIGNED BY JF / DRAWN BY SS / CHECKED BY DB	SHEET NO. X OF X SHEETS	DRAWING NO.
FEB 96	95-088			TC-5

AS CONSTRUCTED				
NO REVISIONS 12-3-96	REVISED		VOID	

FEDERAL RD REGION NO.	DIVISION	PROJ. NO.	SHEET NO.	TOTAL SHEETS
VIII	COLORADO	CC 4701-082	115	154

REVISIONS		

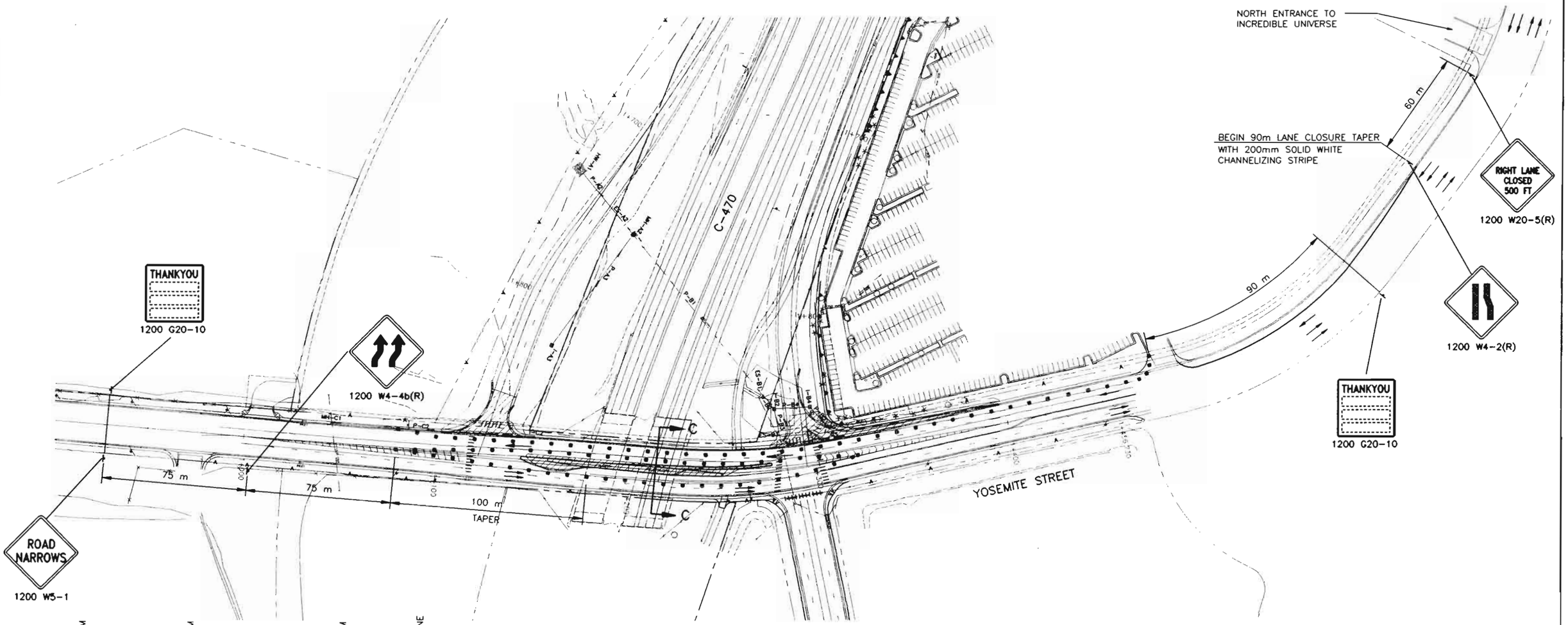

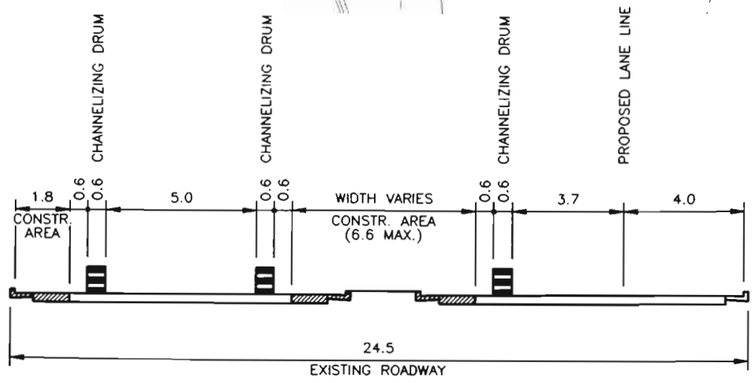

SECTION C-C

LEGEND :

- CONSTRUCTION AREA
- TRAVEL LANES AND DIRECTION
- CHANNELIZING DEVICE
- BARRICADE

NOTES:

1. REMOVE ALL CONFLICTING SIGNING AND STRIPING.
2. YELLOW AND CRYSTAL MEDIAN BARRIER REFLECTORS SHALL BE MOUNTED ON CONCRETE BARRIER (TEMP.) AT 15.240 m SPACING PER STANDARD S-630-2.

NOTE: WHOLE NUMBERS INDICATE MILLIMETERS DECIMAL NUMBERS INDICATE METERS.

Original Scale 1:1000

FELSBURG HOLT & ULLEVIG

C-470/YOSEMITE INTERCHANGE

CONSTRUCTION TRAFFIC CONTROL PLAN
YOSEMITE ST. STA. 1+000 TO 1+456.699

DATE	PROJECT NO.	DESIGNED BY	DRAWN BY	CHECKED BY	SHEET NO.	OF SHEETS	DRAWING NO.
FEB 96	95-088	JF	SS	DB			TC-6

AS CONSTRUCTED			
NO REVISIONS 12-3-96	REVISED	VOID	

FEDERAL RD REGION NO.	DIVISION	PROJ. NO.	SHEET NO.	TOTAL SHEETS
VIII	COLORADO	CC 4701-082	116	154

REVISIONS		

NOTE:
THIS PLAN TO BE USED IN CONSTRUCTION WITH ALL OTHER TRAFFIC CONTROL PLANS.

N

Original Scale 1:10 000

SUGGESTED CONSTRUCTION TRAFFIC CONTROL
ADVANCED CONSTRUCTION SIGNING

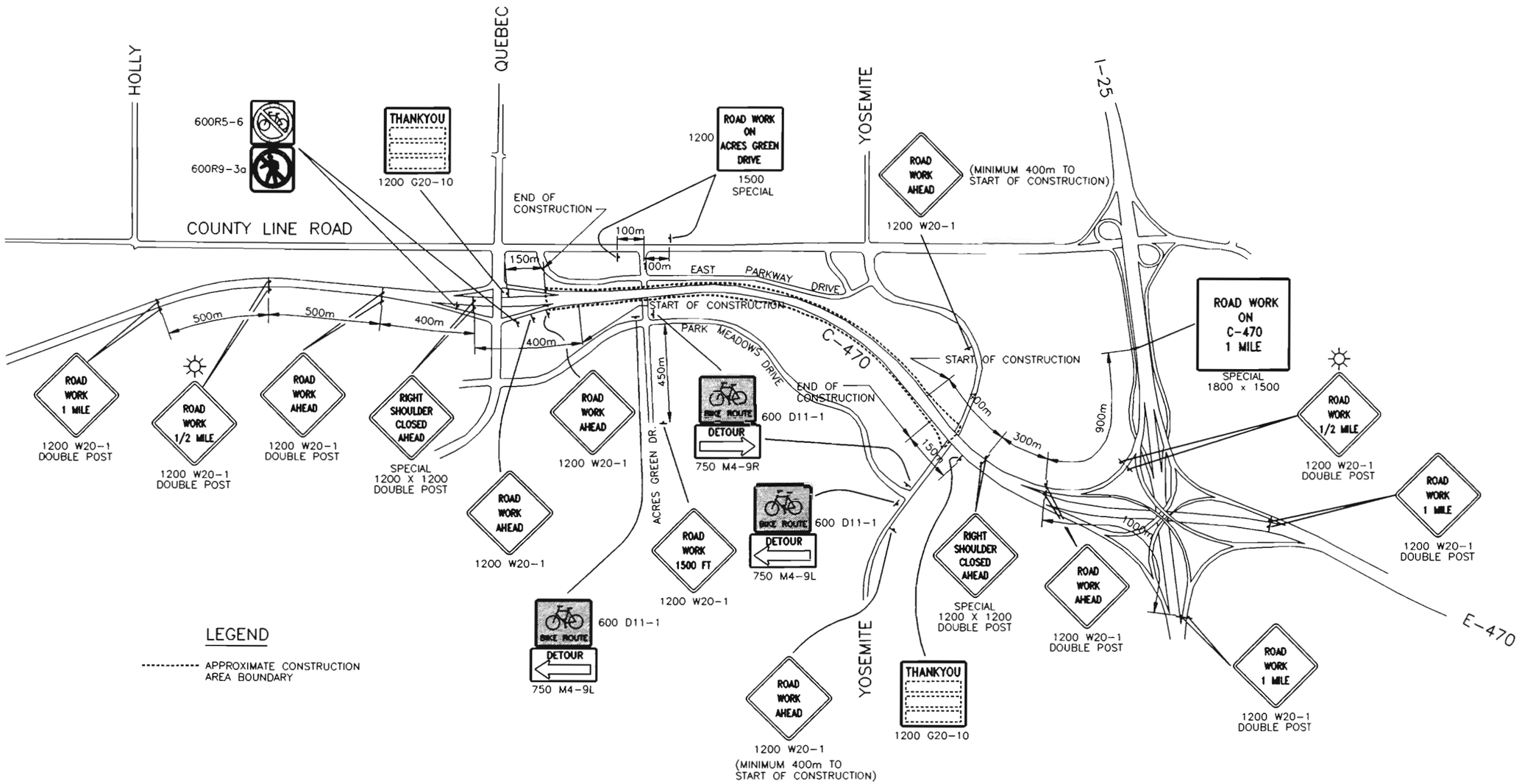

FELSBURG HOLT & ULLEVIG

C-470/YOSEMITE INTERCHANGE				
SUGGESTED CONSTRUCTION TRAFFIC CONTROL ADVANCE CONSTRUCTION SIGNING				
DATE	PROJECT NO.	DESIGNED BY JF DRAWN BY SD CHECKED BY DB	SHEET NO. X OF X SHEETS	DRAWING NO.
FEB 96	95-088			TC-7

AS CONSTRUCTED					
NO REVISIONS ☐	REVISED ☐ 12-3-96	VOID ☐			

FEDERAL RD REGION NO.	DIVISION	PROJ. NO.	SHEET NO.	TOTAL SHEETS
VIII	COLORADO	CC 4701-082	117	154

REVISIONS		

MOBILE PAVEMENT MARKING ZONE

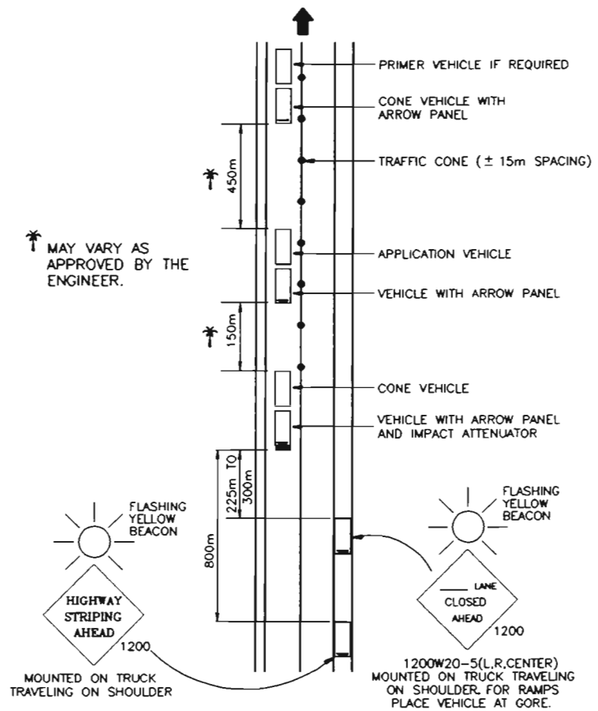

CONSTRUCTION TRAFFIC CONTROL DEVICES FOR MOBILE PAVEMENT MARKING ZONE

SIGN CODE	LEGEND	SIZE (mm)	PANEL SIZE EACH A	B	C	OTHER
**1200W20-5( )	-----LANE/CLOSED/(Distance)	1200x1200		1		
SPECIAL	HIGHWAY/STRIPING/AHEAD	1200x1200		1		
	SIGN TOTALS			**2		
	FLASHING BEACON (PORTABLE)					**2 EA.
	FLASHING ARROW PANEL	(C TYPE)				**3 EA.
	TRAFFIC CONES	900				**300 EA.
	MOBILE PAVEMENT MARKING ZONE					4 DAY

** THESE ITEMS SHALL BE INCLUDED IN THE PAY ITEM "MOBILE PAVEMENT MARKING ZONE" AND WILL NOT BE PAID FOR SEPARATELY.

CONSTRUCTION TRAFFIC CONTROL DEVICES FOR ADDITIONAL WORK WITHIN MOBILE PAVEMENT MARKING ZONE

SIGN CODE	LEGEND	SIZE (mm)	PANEL SIZE EACH A	B	C	OTHER
1200W20-1	ROAD/WORK/AHEAD	1200x1200		8		
1200W20-5( )	-----LANE/CLOSED/(Distance)	1200x1200		8		
1200W4-2( )	Transition Symbol	1200x1200		8		
1200W20-7a	Flagger Symbol	1200x1200		8		
1200W20-7b	BE/PREPARED/TO STOP	1200x1200		8		
	SIGN TOTALS			40		
	FLASHING ARROW PANEL	(C TYPE)				2 EA.
	TRAFFIC CONES	900				200 EA.

NOTE: ALL ITEMS IN THIS TABULATION SHALL BE INCLUDED IN THE PAY ITEM "MOBILE PAVEMENT MARKING ZONE" AND WILL NOT BE PAID FOR SEPARATELY. ALL ITEMS IN THIS TABULATION ARE FOR THE INSTALLATION OF CROSSWALK STRIPES AND PAVEMENT MARKING SYMBOLS AND LEGENDS. LANE CLOSURES FOR THIS WORK SHALL CONFORM TO M&S STANDARD S-630-1 CASES V THROUGH IX.

FELSBURG HOLT & ULLEVIG

C-470/YOSEMITE INTERCHANGE

CONSTRUCTION TRAFFIC CONTROL PLAN

DATE	PROJECT NO.	DESIGNED BY JCF	DRAWN BY	CHECKED BY DR	SHEET NO. 8 OF 8 SHEETS	DRAWING NO.
FEB 96	95-088					TC-8

AS CONSTRUCTED				
NO REVISIONS [12-3-96]	REVISED		VOID	

FEDERAL RD REGION NO.	DIVISION	PROJ. NO.	SHEET NO	TOTAL SHEETS
VIII	COLORADO	CC 4701-082	118	154

REVISIONS		

DESIGN VELOCITY 60 MPH (96 km/h)

ROW	SAND MASS (kg)	1800 LB. VEHICLE EXIT VEH (km/h)	1800 LB. VEHICLE AVE. G'S FOR ROW	1800 LB. VEHICLE IMPULSE TIME	4500 LB. VEHICLE EXIT VEH (km/h)	4500 LB. VEHICLE AVE. G'S FOR ROW	4500 LB. VEHICLE IMPULSE TIME
0		60.0			60.0		
1	200	54.0	7.6	0.04	57.5	3.3	0.03
2	200	48.6	6.6	0.04	55.0	3.1	0.04
3	200	43.8	5.0	0.04	52.7	2.8	0.04
4	400	35.8	7.0	0.05	48.4	4.8	0.04
5	800	24.8	7.4	0.07	41.1	7.3	0.05
6	1400	13.9	4.7	0.11	31.3	7.9	0.06
7	2800	5.5	2.7	0.21	19.3	6.8	0.08
8	2800	2.1	.3	0.54	11.9	2.6	0.13
9	2800	.8	.0	1.38	7.3	1.0	0.21
10	4200	.3	.0	3.77	3.8	0.4	0.37

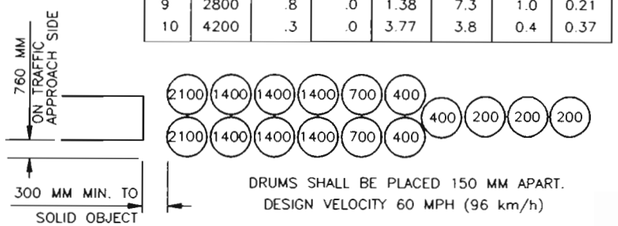

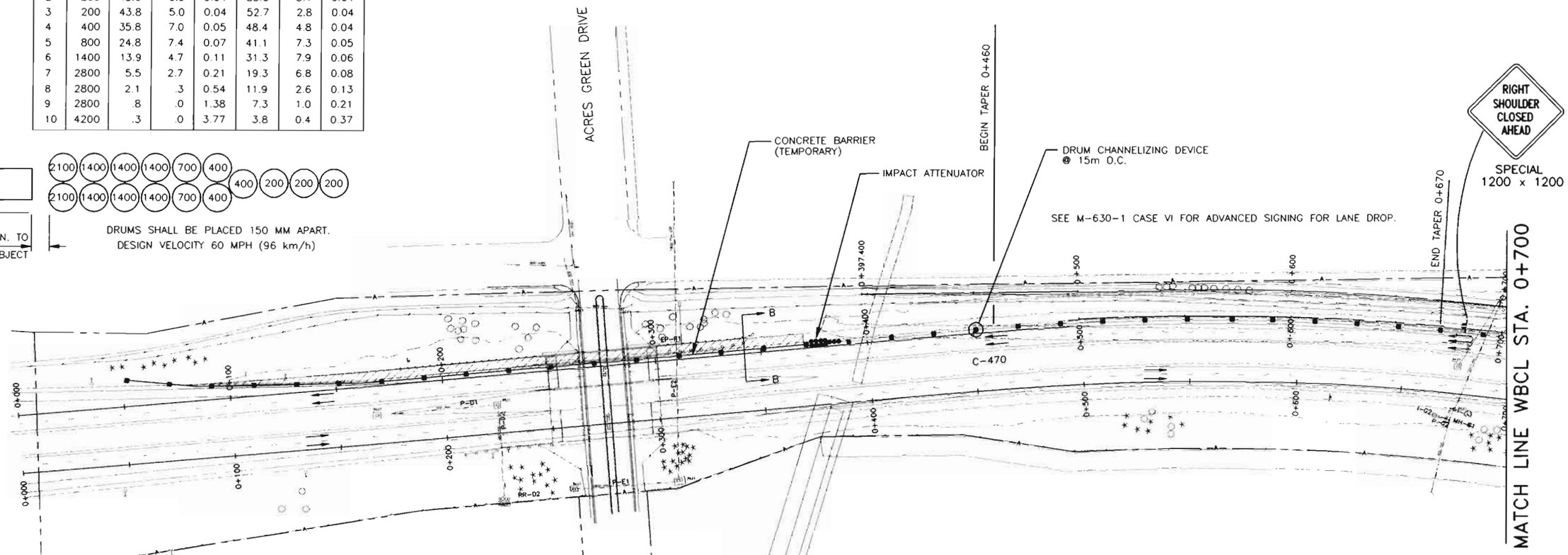

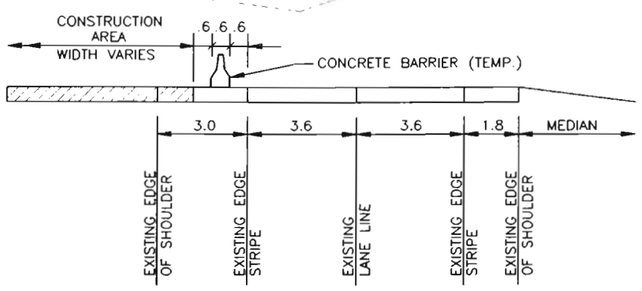

SECTION B-B

LEGEND :

- CONSTRUCTION AREA
- TRAVEL LANES AND DIRECTION
- CONCRETE BARRIER (TEMPORARY)
- DRUM CHANNELIZING DEVICE

NOTES:

1. REMOVE ALL CONFLICTING SIGNING AND STRIPING.
2. YELLOW AND CRYSTAL MEDIAN BARRIER REFLECTORS SHALL BE MOUNTED ON CONCRETE BARRIER (TEMP.) AT 15.0 m SPACING PER STANDARD S-630-2.

NOTE: WHOLE NUMBERS INDICATE MILLIMETERS
DECIMAL NUMBERS INDICATE METERS.

N

Original Scale 1:1000

FELSBURG HOLT & ULLEVIG

C-470/YOSEMITE INTERCHANGE

CONSTRUCTION TRAFFIC CONTROL PLAN
BRIDGE CONSTRUCTION (RAMP OPEN)

DATE	PROJECT NO.	DESIGNED BY	DRAWN BY	CHECKED BY	SHEET NO.	OF SHEETS	DRAWING NO.
FEB 96	95-088	JF	SS	DB			TC-9

AS CONSTRUCTED					
NO REVISIONS 12-3-96	REVISED		VOID		

FEDERAL RD REGION NO.	DIVISION	PROJ. NO.	SHEET NO.	TOTAL SHEETS
VIII	COLORADO	CC 4701-082	119	154

REVISIONS		

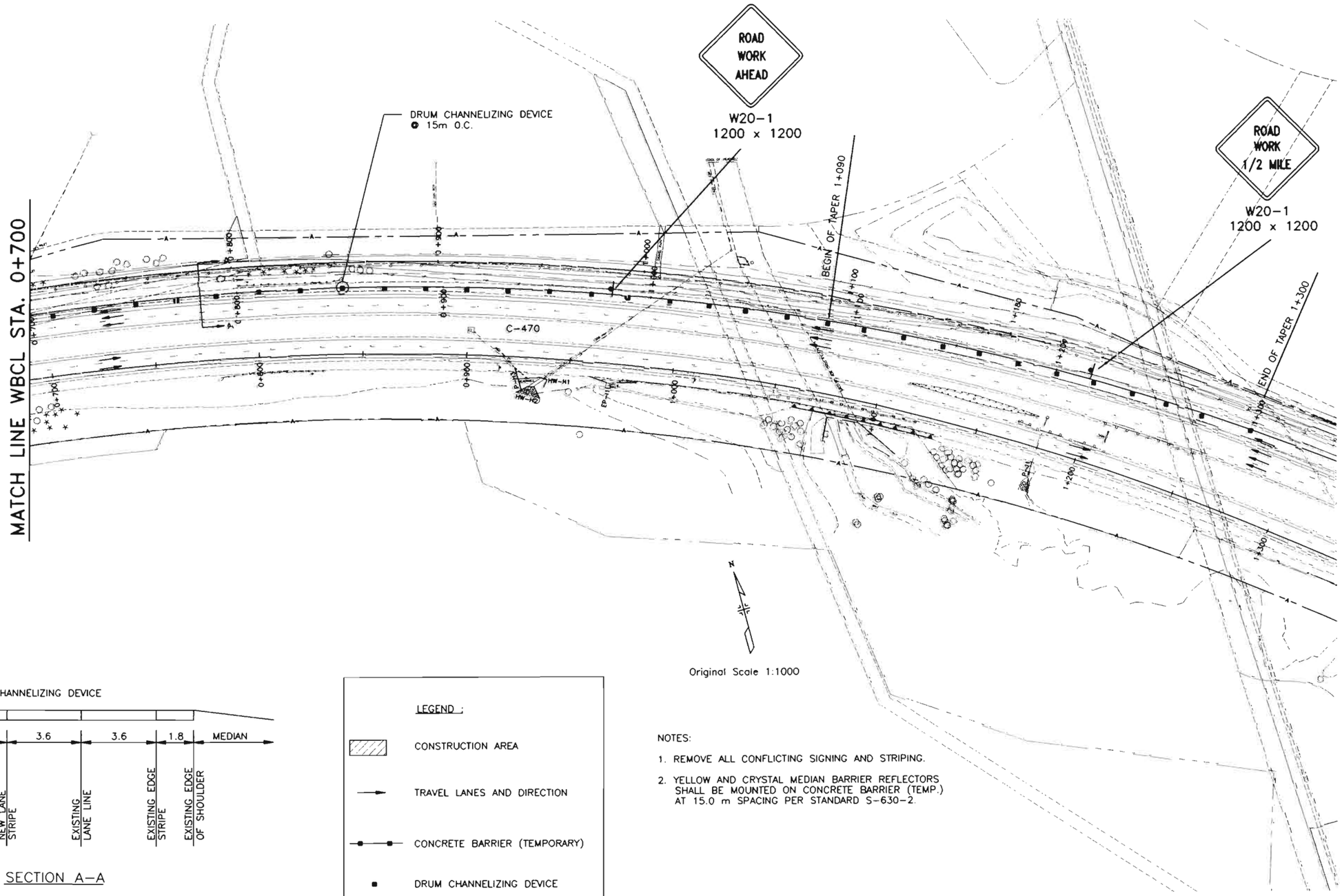

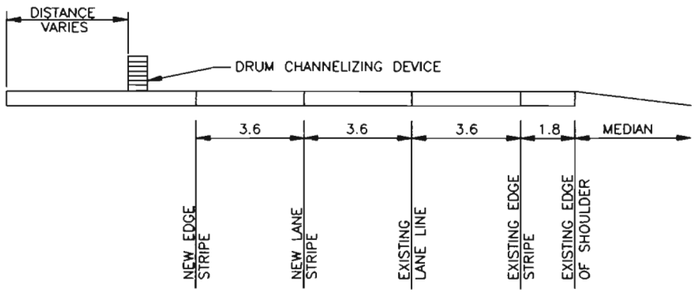

SECTION A-A

LEGEND :

- CONSTRUCTION AREA
- TRAVEL LANES AND DIRECTION
- CONCRETE BARRIER (TEMPORARY)
- DRUM CHANNELIZING DEVICE

NOTES:

1. REMOVE ALL CONFLICTING SIGNING AND STRIPING.
2. YELLOW AND CRYSTAL MEDIAN BARRIER REFLECTORS SHALL BE MOUNTED ON CONCRETE BARRIER (TEMP.) AT 15.0 m SPACING PER STANDARD S-630-2.

NOTE: WHOLE NUMBERS INDICATE MILLIMETERS
DECIMAL NUMBERS INDICATE METERS.

FELSBURG HOLT & ULLEVIG

C-470/YOSEMITE INTERCHANGE

CONSTRUCTION TRAFFIC CONTROL PLAN BRIDGE CONSTRUCTION (RAMP OPEN)

DATE	PROJECT NO.	DESIGNED BY	DRAWN BY	CHECKED BY	SHEET NO.	OF SHEETS	DRAWING NO.
FEB 96	95-088	JF	SS	DB			TC-10

95088\ACAD\#0\8610.dwg, 1:1, 02/05/96 01:08:42
SOUTH WATER CONSULTING DRAWING DO NOT ALTER

AS CONSTRUCTED					
NO REVISIONS 12-3-96	REVISED		VOID		

FEDERAL RD REGION NO.	DIVISION	PROJ. NO.	SHEET NO.	TOTAL SHEETS
VIII	COLORADO	CC 4701-082	120	654

REVISIONS		

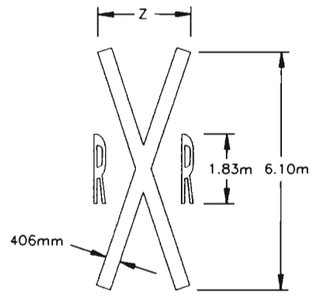

z = NORMALLY 2.44m, MAY VARY ACCORDING TO LANE WIDTH

S = 71mm TO 76mm W = 292mm TO 305mm

AREA = 6.41 SQ. M

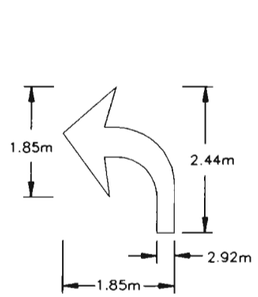

AREA = 1.44 SQ. M

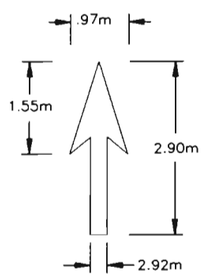

AREA = 1.16 SQ. M

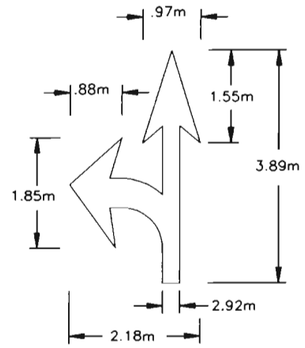

AREA = 2.55 SQ. M

DESIGNATED PAYMENT AREAS

FOR THE FOLLOWING H, W, AND S DIMENSIONS PAY:

H = 2.44 M WORDS

STOP – 2.14 SQ. M
ONLY – 2.09 SQ. M
AHEAD – 2.69 SQ. M
BUS – 1.72 SQ. M
XING – 1.86 SQ. M
LANE – 2.09 SQ. M
BIKE – 1.95 SQ. M
SCHOOL(1L) – 3.07 SQ. M
SCHOOL(2L) – 7.90 SQ. M

H = 1.22 M WORDS

BIKE – .51 SQ. M
ONLY – .56 SQ. M
LANE – .56 SQ. M
XING – .46 SQ. M

TYPICAL LETTER MEASUREMENTS

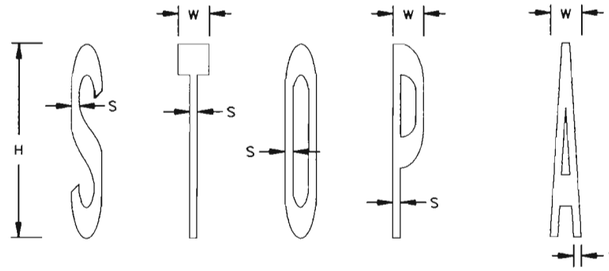

H = HEIGHT	H = 2.44m	H = 1.22m
W = WIDTH	W = .39m TO .41m	W = 196mm TO 203mm
S = STROKE	S = 97mm TO 102mm	S = 48mm TO 51mm

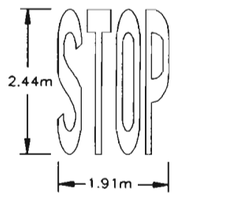

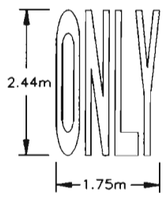

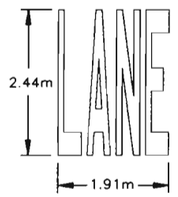

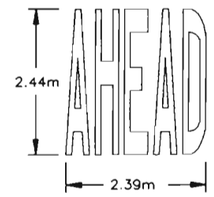

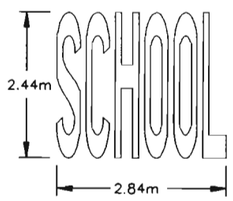

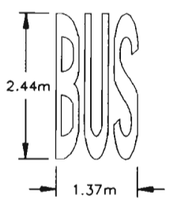

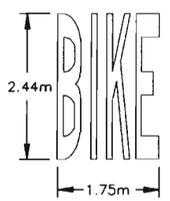

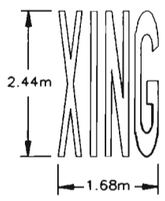

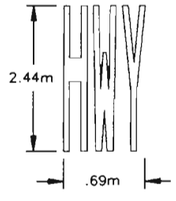

1 – LANE SCHOOL

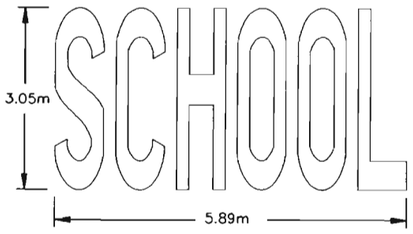

STROKE = 203mm
2 – LANE SCHOOL

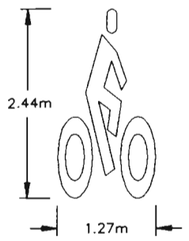

AREA = .98 SQ. M

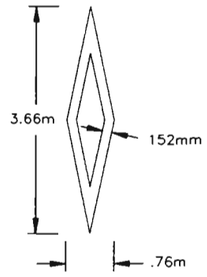

AREA = .93 SQ. M

NOTES

IF HEIGHT IS INCREASED OR DECREASED THEN ALL MEASUREMENTS CHANGE PROPORTIONATELY. EXAMPLE: "H" measurement for STOP is reduced to 1.22m From 2.44m then Square Meters = .54m (1/4 of 2.14 Sq. M).

PAVEMENT WORD AND SYMBOL MARKINGS, TRANSVERSE AND LONGITUDINAL (CONTINENTAL) CROSSWALK LINES, AND STOP LINES WILL BE PAID FOR IN SQUARE FEET USING THEIR SPECIFIC BID ITEMS.

PAVEMENT MARKING WORDS AND SYMBOLS

NOTE: WHOLE NUMBERS INDICATE MILLIMETERS
DECIMAL NUMBERS INDICATE METERS.

FELSBURG HOLT & ULLEVIG

C-470/YOSEMITE INTERCHANGE
PAVEMENT MARKING WORDS & SYMBOLS

DATE	PROJECT NO.	DESIGNED BY	DRAWN BY SS	CHECKED BY DB	SHEET NO. 1 OF 1 SHEETS	DRAWING NO. PM-1
FEB 96	95-088					

G:\95088\ACAD\460RAW00.dwg, J.J., 02/15/96 at 1:00

CONNECTED STREETWORKS DRAWING, DO NOT ALTER MANUALLY

	REVISIONS	S-614-50	1/9

FEDERAL RD REGION NO.	DIVISION	PROJ. NO.	SHEET NO.	TOTAL SHEETS
VIII	COLORADO	CC 4701-082	121	154

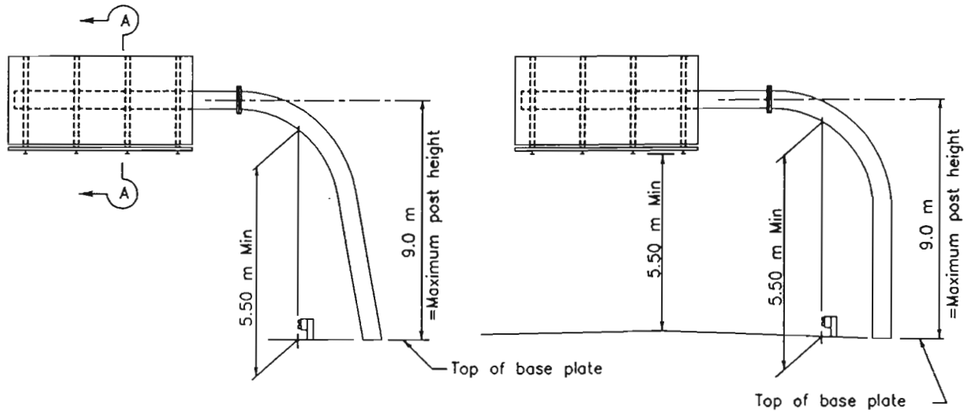

SLANTED SINGLE POST TYPE

VERTICAL SINGLE POST TYPE

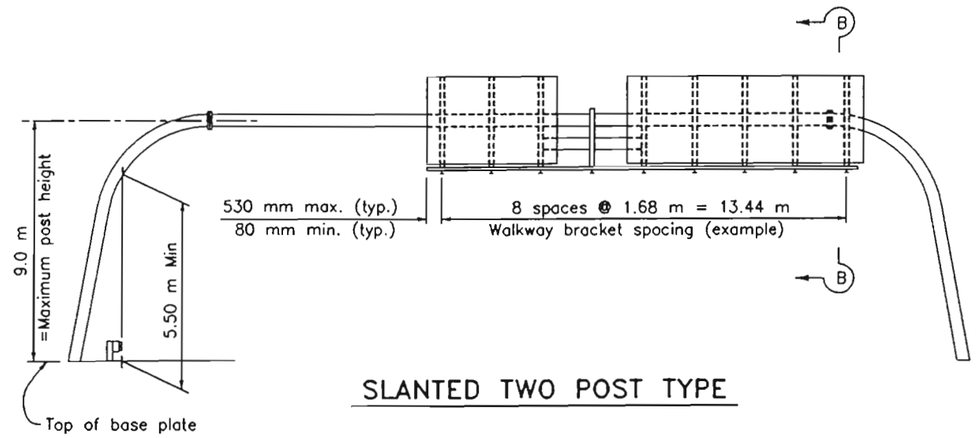

SLANTED TWO POST TYPE

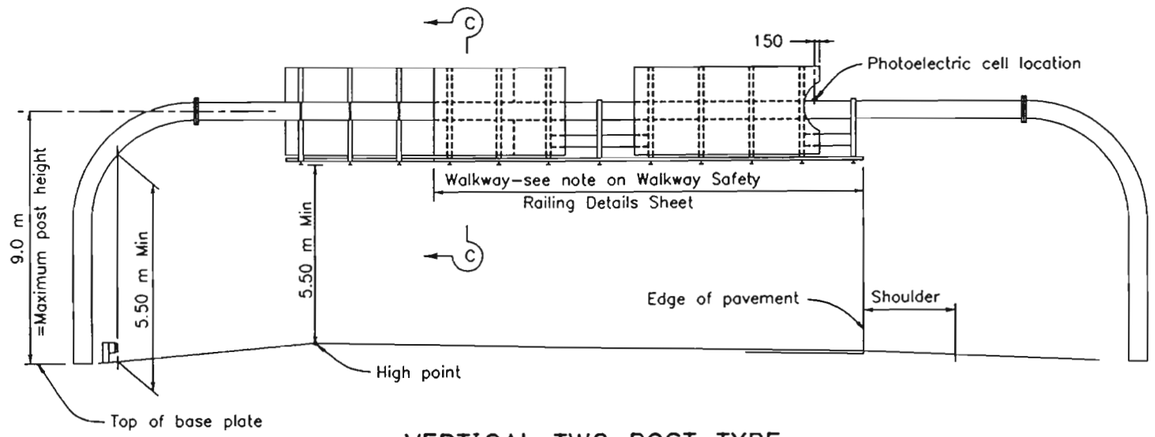

VERTICAL TWO POST TYPE

INSTRUCTIONS TO FABRICATOR

Format sheet shows:

1. Sign structure locotion.
2. Length of structure span.
3. Panel size and location an structure.
4. Post height to bottom of panel or mast arm elevation.
5. Base plate elevation.
6. Photoelectric cell location if required.
7. Walkway location.

INDEX

1. Instructions and examples.
2. Single post type – layout and pipe selection.
3. Two post type – layout and pipe selection.
4. Structural frame details No. 1.
5. Structural frame details No. 2.
6. Foundation details.
7. Walkway details
8. Walkway safety railing details
9. Lighting details

WALKWAY BRACKETS:

Maintain uniform spacing where possible.
Maximum spacing shall not exceed 1.68 m
Minimum clear to field splice = 300 mm ±

WALKWAY AND SAFETY RAILING:

Wolkway to extend full length of sign area and be continuous between signs.

PHOTOELECTRIC CELL:

Place behind sign panel nearest right shoulder unless otherwise shown on format sheet.

NOTES

Specifications:
Design: A.A.S.H.T.O. Standard Specifications for Structural and Supports for Highway Signs, Luminaires and Traffic Signals 1994.

Construction: Standard specifications and the special provision, Revision of section 614, Overhead Sign Structures.

Wind loading: 129 km/h velocity.

Soil pressure: 86.18 MPa

Minimum vertical clearance: 5.5 m above roadway and shoulders.

Welding: All welding continuous unless otherwise noted on the plans. All welding to be done in accordance with the Standard Specifications.

If a proposed sign structure exceeds the limits of this standard in ony way (span too long, height > 9 m, panel depth > 4.3m, etc.) then a special design will be required. Please contact Staff Bridge.

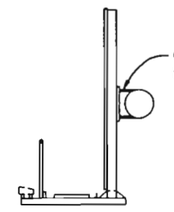

SECTION A–A

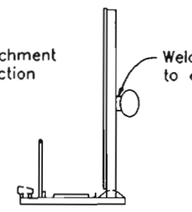

SECTION B–B

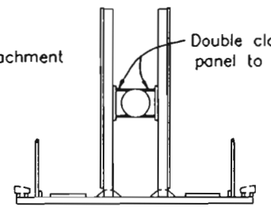

SECTION C–C

ALL DIMENSIONS ARE IN MILLIMETERS UNLESS OTHERWISE SHOWN

COLORADO
DEPARTMENT OF TRANSPORTATION

OVERHEAD SIGNS – TUBULAR INSTRUCTIONS AND EXAMPLES

NO SCALE

		ISSUED BY STAFF TRAFFIC BRANCH	STANDARD PLAN NO. S-614-50
MS40N	DATE REVISED	DATE: Jan. 17, 1996	SHEET 1 OF 9

	REVISIONS	S-614-50	2/9

FEDERAL RD REGION NO.	DIVISION	PROJ. NO.	SHEET NO.	TOTAL SHEETS
VIII	COLORADO	CC 4701-082	122	154

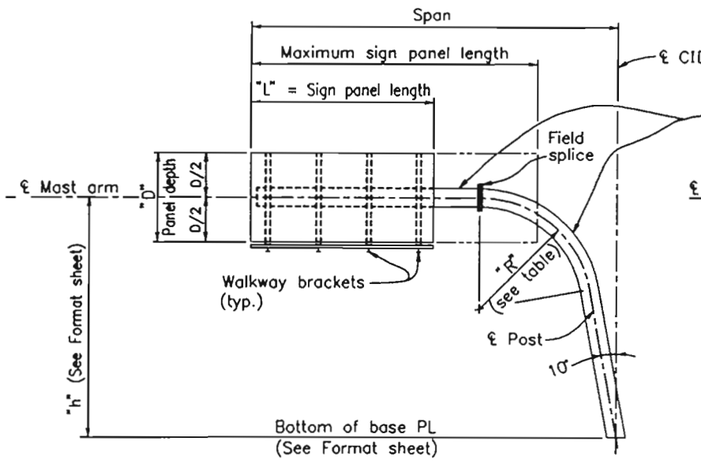

SLANTED POST CANTILEVER

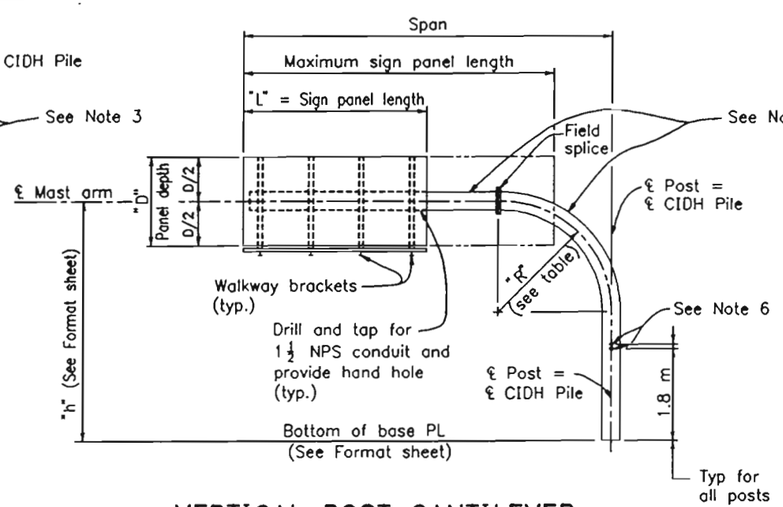

VERTICAL POST CANTILEVER

TYPE	PIPE POST "R" (m)	PIPE POST Dia (NPS) in. (mm)
D	2.44	12 (305)
G	2.44	14 (356)
K	2.44	16 (406)
N	2.44	18 (457)
Q	2.44	20 (508)
S	3.05	22 (559)
U	3.05	24 (610)

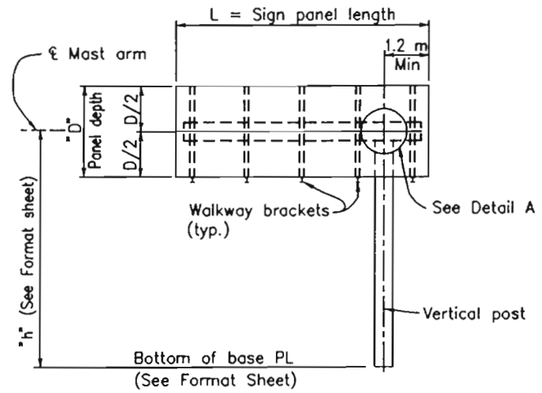

BUTTERFLY

50 % COVERAGE CHART

CANTILEVER SELECTION CHART										
"D" (m) ⟶		3.048			3.658			4.267		
"h" (m) ⟶		h≤6	6<h≤7.5	7.5<h≤9.0	h≤6	6<h≤7.5	7.5<h≤9.0	h≤6	6<h≤7.5	7.5<h≤9.0
Span ≤ (m)	6.0	12	12	14	12	14	14	14	14	16
	7.5	14	14	16	14	16	16	16	16	18
	9.0	16	16	18	16	18	18	18	18	20
	10.5	18	18	20	20	20	20	20	22	22
	12.0	20	20	22	22	22	22	22	24	24
	13.5	22	22	24	24	24	24			

80 % COVERAGE CHART

CANTILEVER SELECTION CHART										
"D" (m) ⟶		3.048			3.658			4.267		
"h" (m) ⟶		h≤6	6<h≤7.5	7.5<h≤9.0	h≤6	6<h≤7.5	7.5<h≤9.0	h≤6	6<h≤7.5	7.5<h≤9.0
Span ≤ (m)	6.0	14	16	16	14	16	18	16	18	20
	7.5	16	18	18	18	18	20	18	20	22
	9.0	18	20	20	20	20	22	20	22	24
	10.5	20	22	22	22	24	24	24	24	
	12.0	22	24	24	24					
	13.5	24								

GENERAL NOTES

1. When several sign panels are to be installed with a space between the panels, the space shall be as small as possible and 610 mm maximum.
2. All posts between base plate and field splice are extra strong pipe. All mast arms are standard pipe.
3. During sign erection the post shall be raked as necessary with the use of the leveling nuts to make the sign panel level.
4. At final position of post all top and bottom anchor bolt nuts shall be wrench tightened against base plate.
5. Drill and tap for 1½ NPS chase nipples and plug with recessed pipe plugs. Place perpendicular to sign panel axis and away from approaching traffic.
6. NPS – Nominal Pipe Size

PIPE SELECTION PROCEDURE FOR SLANTED AND VERTICAL POST CANTILEVERS

A. Coverage Percentage = $\frac{\text{Maximum sign panel length}}{\text{Span}}$

B. Pick NPS (shown in inches) from the 50% or the 80% chart. The coverage percentage chosen should be high enough to include any sign panels which may potentially be placed on this sign in the future.

C. If no tube is shown for a certain span this indicates that this span/sign panel/height combination exceeds the limits of this standard.

D. On the format sheet indicate the diameter of the tube "D", the radius "R", the height "h" and the span.

BUTTERFLY POST PIPE SELECTION PROCEDURE

A. For butterfly post use sign panel length "L" as the span length. Look up the tube size in the 80% coverage chart with known panel depth "D" and appropriate height "h".

B. Limits of this standard are "L" < 9.0 m.

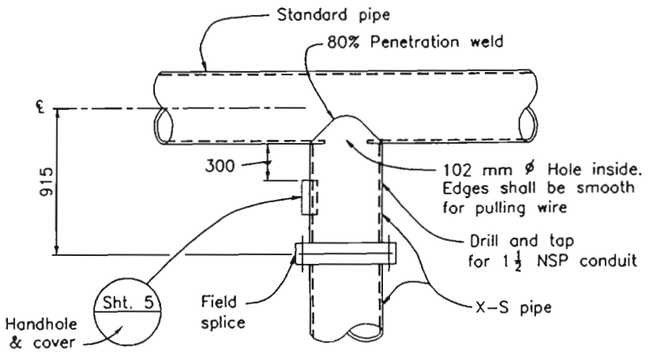

DETAIL A

ALL DIMENSIONS ARE IN MILLIMETERS UNLESS OTHERWISE SHOWN

COLORADO DEPARTMENT OF TRANSPORTATION

OVERHEAD SIGNS – TUBULAR SINGLE POST TYPE LAYOUT AND PIPE SELECTION

NO SCALE

DATE REVISED	ISSUED BY	STANDARD PLAN NO.
	STAFF TRAFFIC BRANCH	S-614-50
MS40P	DATE: Jan. 14, 1996	SHEET 2 OF 9

REVISIONS	S-614-50	3/9

FEDERAL RD REGION NO.	DIVISION	PROJ. NO.	SHEET NO.	TOTAL SHEETS
VIII	COLORADO	CC 4701-082	123	454

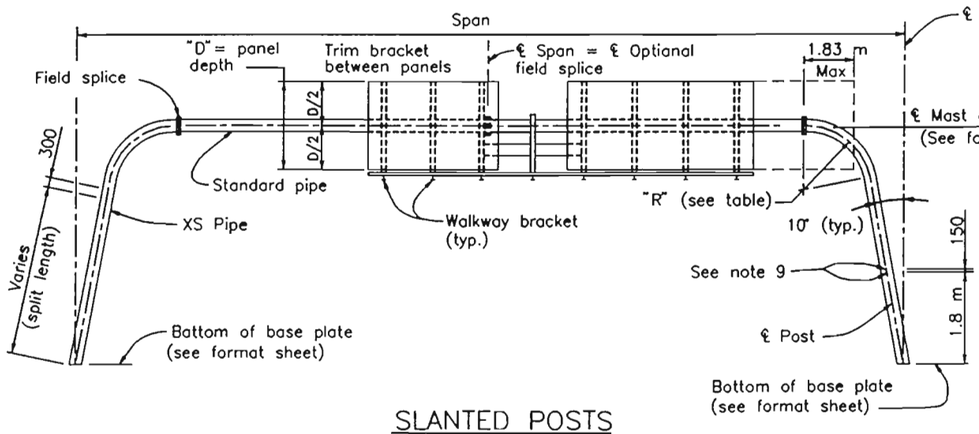

SLANTED POSTS

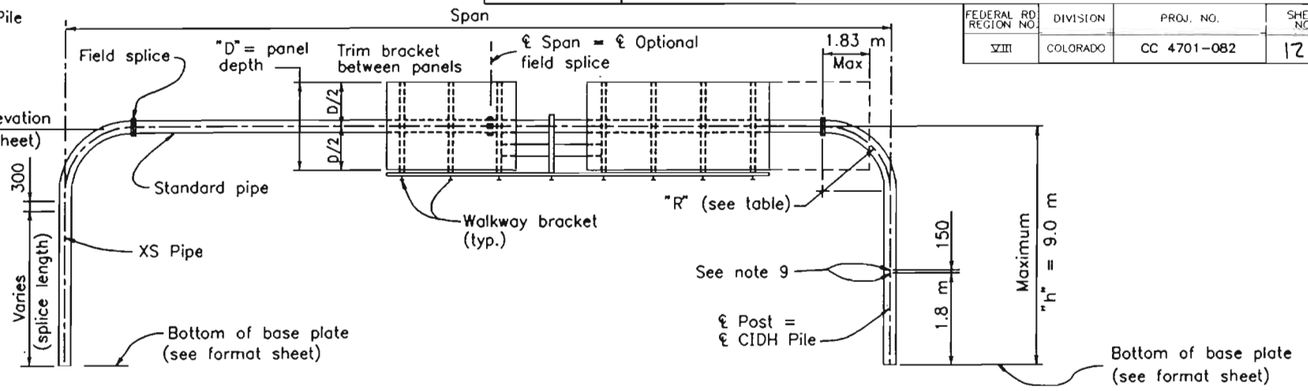

VERTICAL POSTS

* Mast arm diameter same as post.

○ Indicates camber type, see table. For signs in the column on far right use camber as provided on the left.

VERTICAL POSTS (See Note 3)

* PIPE POST			"D" ≤ 3.048	up to 80% coverage	
			3.048 < "D" ≤ 3.658	up to 58% coverage	up to 80% coverage
"R" (m)	Dia (NPS) in. (mm)	Split (mm)	3.658 < "D" ≤ 4.267	up to 45% coverage	up to 60% coverage
2.44	12 (305)	150	Span (m)	15, 16 and 17 Ⓐ	14 Ⓐ
2.44	14 (356)	150		18, 19 and 20 Ⓐ	15 and 16
2.44	16 (406)	150		21, 22, 23, and 24 Ⓑ	17, 18, 19 and 20
2.44	18 (457)	125		25, 26, 27, and 28 Ⓒ	21, 22, 23, and 24
3.05	20 (508)	125		29, 30, 31, and 32 Ⓒ	25, 26, 27, and 28
3.05	22 (559)	125		33, 34, 35 and 36 Ⓓ	29, 30, 31, and 32
3.66	24 (610)	125		37 - 43 ▲ Ⓓ •	33, 34, 35 and 36

▲ Maximum coverage tapers from (.80 to .50) for "D" ≤ 3.048, (.58 to .42) for 3.048 < "D" ≤ 3.658 and (.45 - .30) for 3.658 < "D" ≤ 4.267. Interpolate on a straight line for values between 37 and 43 m.

• Use camber type E for 41-43 m.

CAMBER

Type	"x"	"y"
Ⓐ	38	51
Ⓑ	57	76
Ⓒ	70	102
Ⓓ	89	127
Ⓔ	114	152

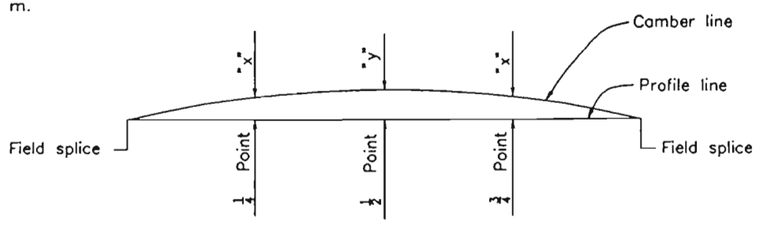

CAMBER DIAGRAM

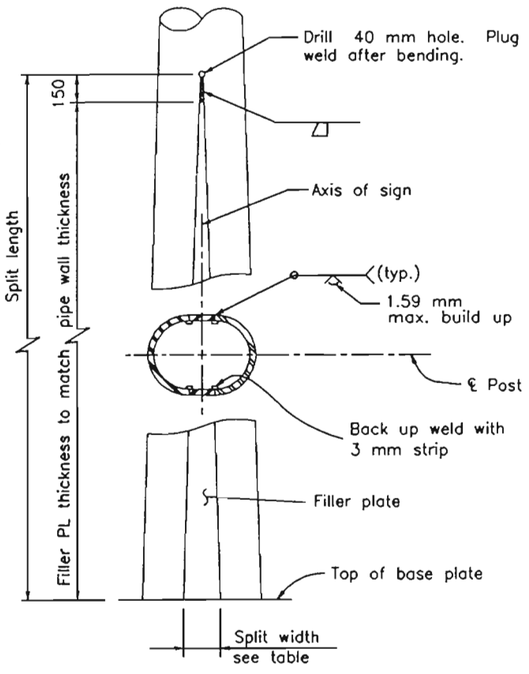

POST SPLIT DETAILS

NOTES

1. The maximum sign panel overlap onto elbow shall not exceed 1.83 m from the field splice.
2. Coverage Percentage = $\frac{\text{Maximum sign panel length}}{\text{Span}}$
3. For slanted post type subtract 5% from the allowable coverage shown for the vertical post type.
4. When several spans are to be installed with spaces between the panels, the total sign panel length is the sum of the individual sign panel lengths only.
5. All posts between base plate and field splice are extra strong pipe. All mast arms are standard pipe.
6. Before any portion of the sign frames are assembled in their final positions the Contractor shall demonstrate to the Engineer by preassembly or other approved methods that the span lengths of the frames in the no load condition match within 13 mm ± the field measured span lengths between foundations.
7. If the sign frames are erected as one unit, they shall be adequately suspended to avoid distortions or changes in span length between base plates.
8. At final position of post, all top and bottom anchor bolt nuts shall be wrench tightened against base plate.
9. Drill and tap for 1½ NPS chase nipples and plug with recessed pipe plugs. Place perpendicular to sign panel axis and away from approaching traffic.
10. Maximum difference between post heights on an individual frame = 1.5 m.
11. For standard pipe members (Mast Arms) with lengths greater than 12 m an optional bolted field splice will be permitted at ℄ of the span to facilitate galvanizing and hauling operations. For standard pipe members with lenghts greater than 24 m two optional bolted field splices will be allowed at the 1/3 points.
12. NPS = Nominal Pipe Size.

ALL DIMENSIONS ARE IN MILLIMETERS UNLESS OTHERWISE SHOWN

COLORADO DEPARTMENT OF TRANSPORTATION

OVERHEAD SIGNS - TUBULAR TWO POST TYPE LAYOUT AND PIPE SELECTION

NO SCALE

DATE REVISED	ISSUED BY	STANDARD PLAN NO.
	STAFF TRAFFIC BRANCH	S-614-50
MS40Q	DATE: Jan. 17, 1996	SHEET 3 OF 9

REVISIONS	S-614-50	4/9

FEDERAL RD REGION NO.	DIVISION	PROJ. NO.	SHEET NO.	TOTAL SHEETS
VIII	COLORADO	CC 4701-082	124	154

Sign panel shall be sheet aluminum mounted using backing zees. All details and requirements shall be as per the Colorado DOT M+S Standards. Payment shall be made under item 614, Sign Panel (Class III).

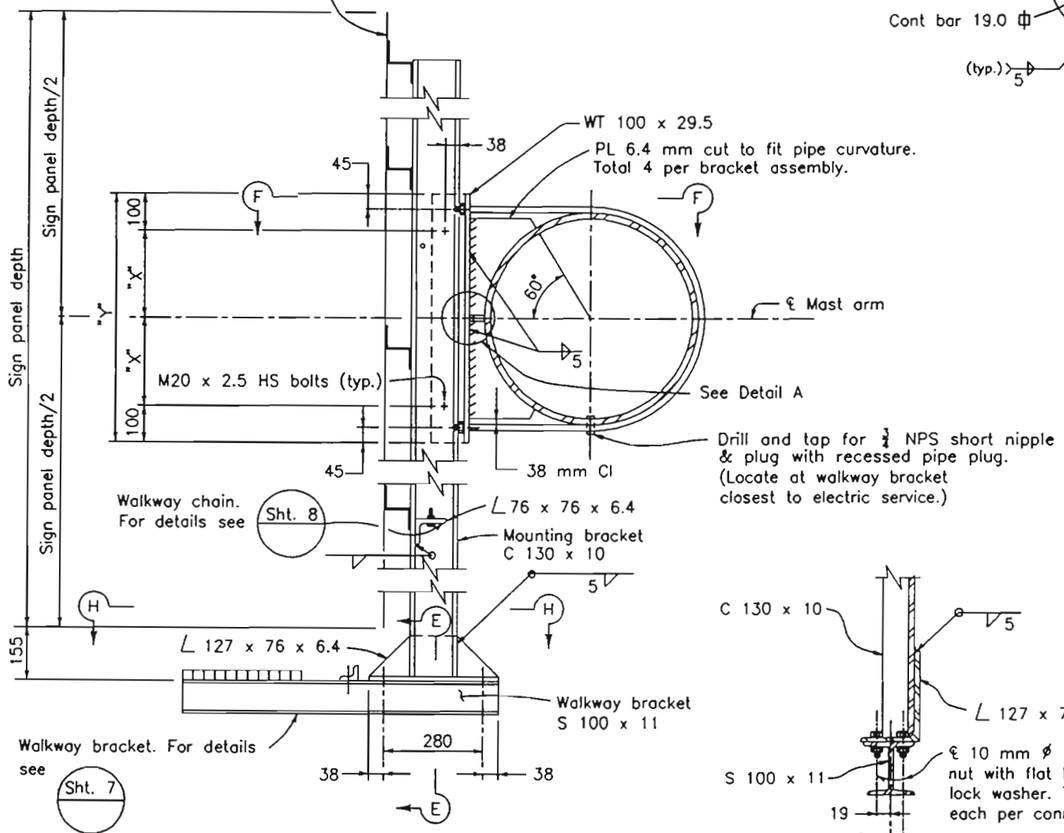

SINGLE PANEL

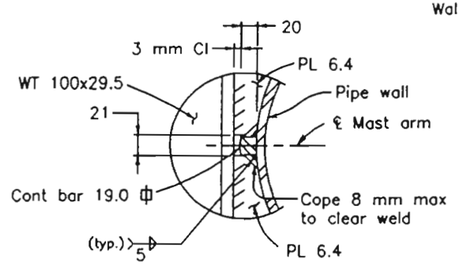

DETAIL A

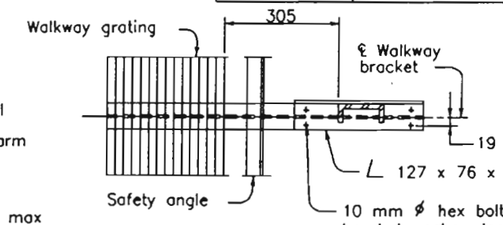

SECTION H-H

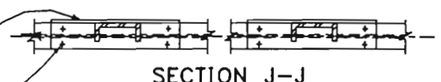

SECTION J-J

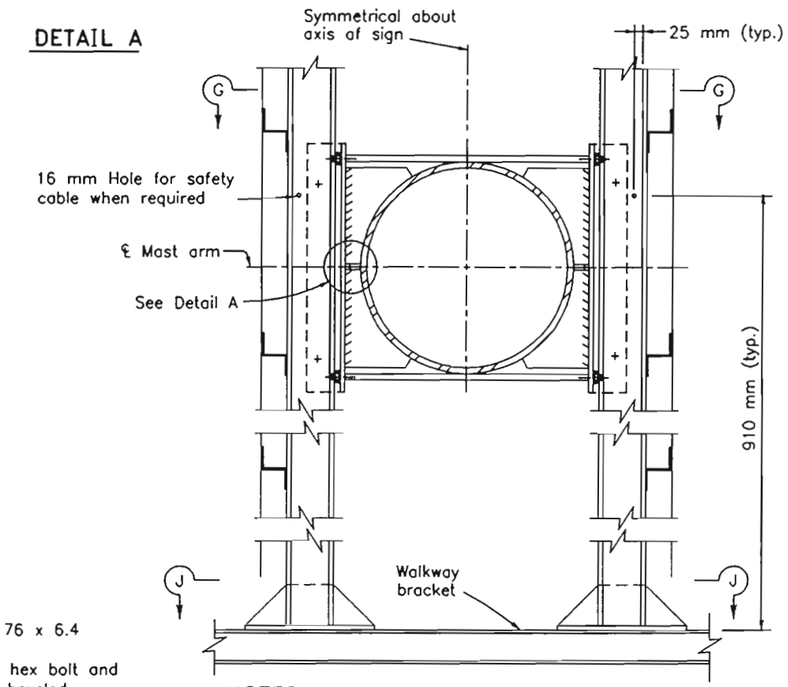

NOTES

For details not shown or noted see "Single Panel". Assembly details shown apply to tangent portion of pipe only. For maunting bracket on elbow see Detail B.

DOUBLE PANEL

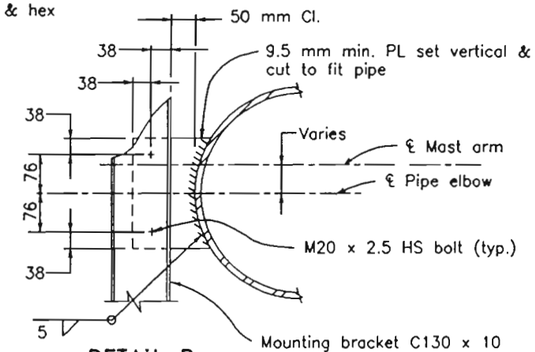

DETAIL B

Mounting bracket on elbow

Pipe Size NPS in.	(mm)	"X" (mm)	"Y" (mm)
8	(203)	61	324
10	(254)	88	378
12	(305)	113	428
14	(356)	129	460
16	(406)	154	510
18	(457)	180	562
20	(508)	205	612
24	(610)	256	714

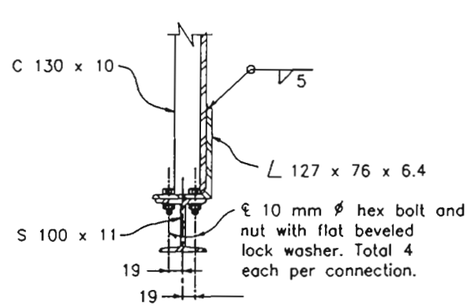

SECTION E-E

MOUNTING BRACKET ASSEMBLY DETAILS

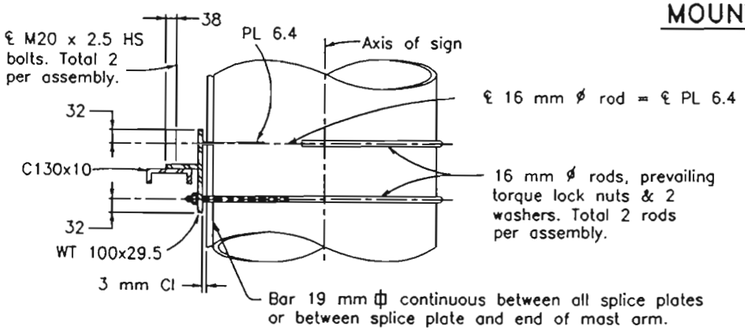

VIEW F-F

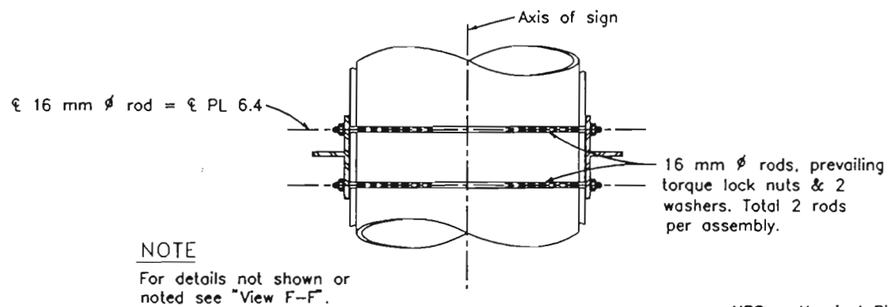

NOTE

For details not shown or noted see "View F-F".

VIEW G-G

NPS = Nominal Pipe Size

ALL DIMENSIONS ARE IN MILLIMETERS UNLESS OTHERWISE SHOWN

COLORADO DEPARTMENT OF TRANSPORTATION

OVERHEAD SIGNS - TUBULAR

STRUCTURAL FRAME DETAILS NO. 1

NO SCALE

DATE REVISED	ISSUED BY	STANDARD PLAN NO.
MS40R	STAFF TRAFFIC BRANCH	S-614-50
	DATE: Jan. 3, 1996	SHEET 4 OF 9

REVISIONS	S-614-50	5/9

FEDERAL RD REGION NO.	DIVISION	PROJ. NO.	SHEET NO.	TOTAL SHEETS
VIII	COLORADO	CC 4701-082	125	154

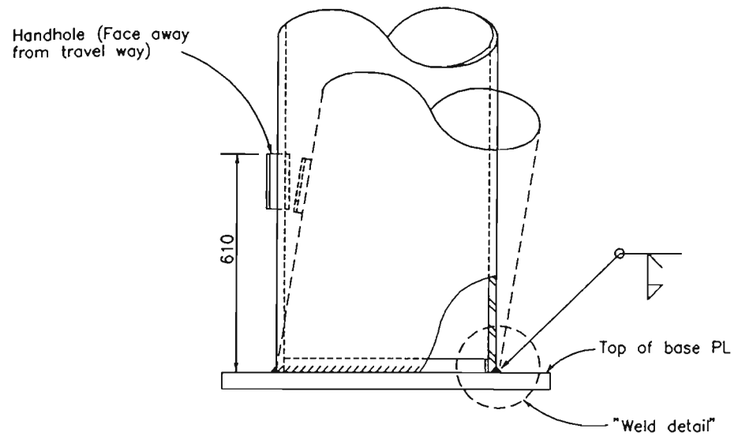

POST BASE ELEVATION

(For base PL details see "Foundation Details" sheet)

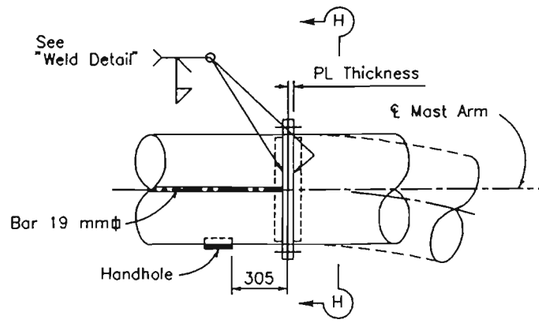

FIELD SPLICE

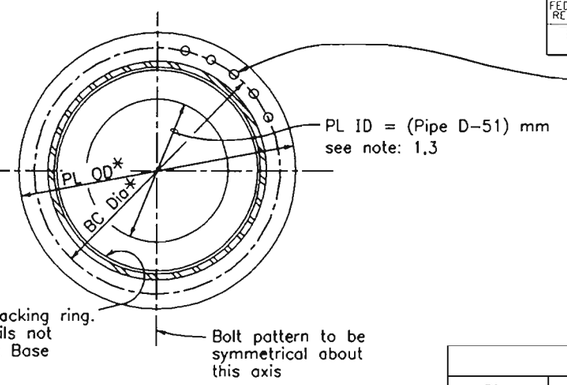

SECTION H-H

Torque to tension of:
100 kn for M16x2
160 kn for M20x2.5
200 kn for M22x2.5

See table for other details

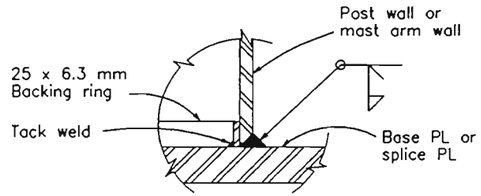

WELD DETAIL

FIELD SPLICE				
Pipe Diameter (NPS) in. (mm)	PL Thickness mm	HS Bolts	* BC Diameter mm	* PL OD mm
8 (203)	28.6	13-M16x2	280	350
10 (254)	31.8	20-M16x2	340	400
12 (305)	31.8	16-M20x2.5	390	450
14 (356)	31.8	18-M20x2.5	420	480
16 (406)	31.8	20-M20x2.5	470	530
18 (457)	34.9	24-M20x2.5	520	580
20 (508)	34.9	27-M20x2.5	570	640
24 (610)	38.1	26-M22x2.5	690	760

* See note 4

NOTE

Design based on capacity of standard pipe.

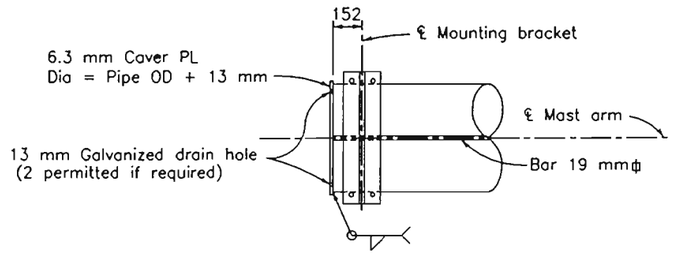

MAST ARM END DETAIL

(For "Single Post Type" only)

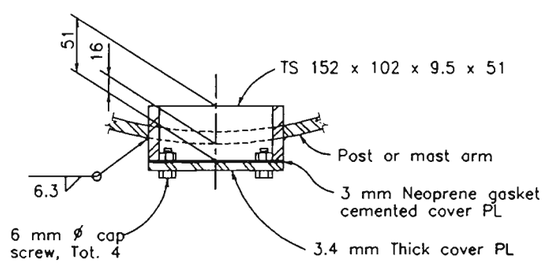

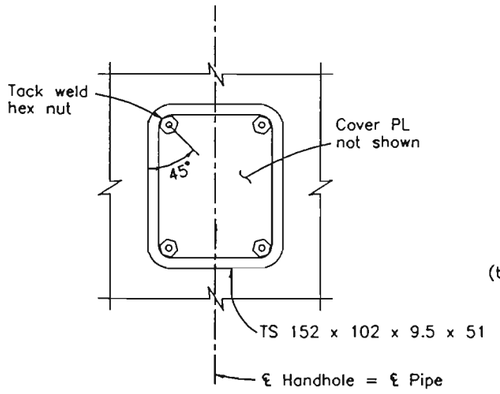

HANDHOLE & COVER DETAILS

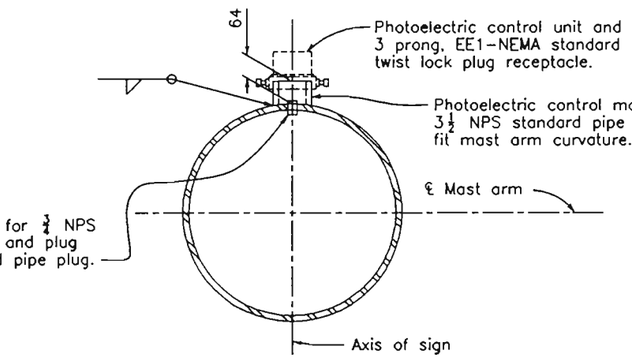

PHOTOELECTRIC CONTROL DETAILS

(See "Layout" sheet for location when required)

NOTES

1. Place single thin bead of silicone caulking compound around hole prior to bolting. Caulking not to inerfere with friction between plates in balted areo.
2. Prime and paint post interior from base PL to 150 mm above lower handhole, unless post is galvanized.
3. "D" is inside diometer of "extra strong pipe".
4. Field splice diameters marked "*" may be increased 50 mm to facilitate bolting.

NPS = Nominal Pipe Size

Note: Gussets are to be placed at the base of all tubular posts. See sheet 6 for location of gussets. Gussets are not shown elsewhere in these sheets for clarity.

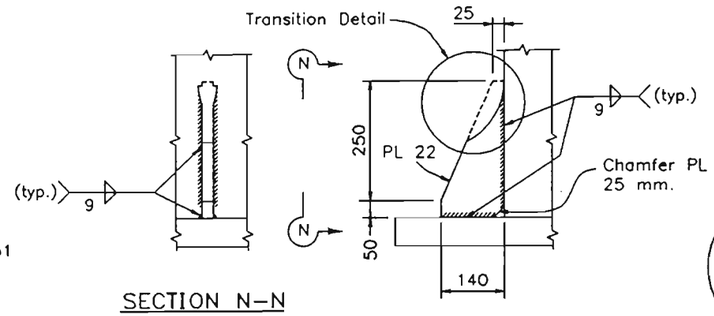

SECTION N-N

GUSSET DETAILS

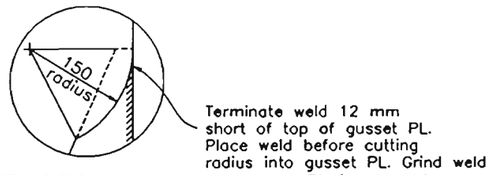

TRANSITION DETAIL

ALL DIMENSIONS ARE IN MILLIMETERS UNLESS OTHERWISE SHOWN

COLORADO DEPARTMENT OF TRANSPORTATION

OVERHEAD SIGNS - TUBULAR STRUCTURAL FRAME DETAILS NO. 2

NO SCALE

DATE REVISED	ISSUED BY	STANDARD PLAN NO.
	STAFF TRAFFIC BRANCH	S-614-50
MS40S	DATE: Jan. 3, 1996	SHEET 5 OF 9

REVISIONS	S-614-50	6/9

FEDERAL RD REGION NO.	DIVISION	PROJ. NO	SHEET NO.	TOTAL SHEETS
VIII	COLORADO	CC 4701-082	126	154

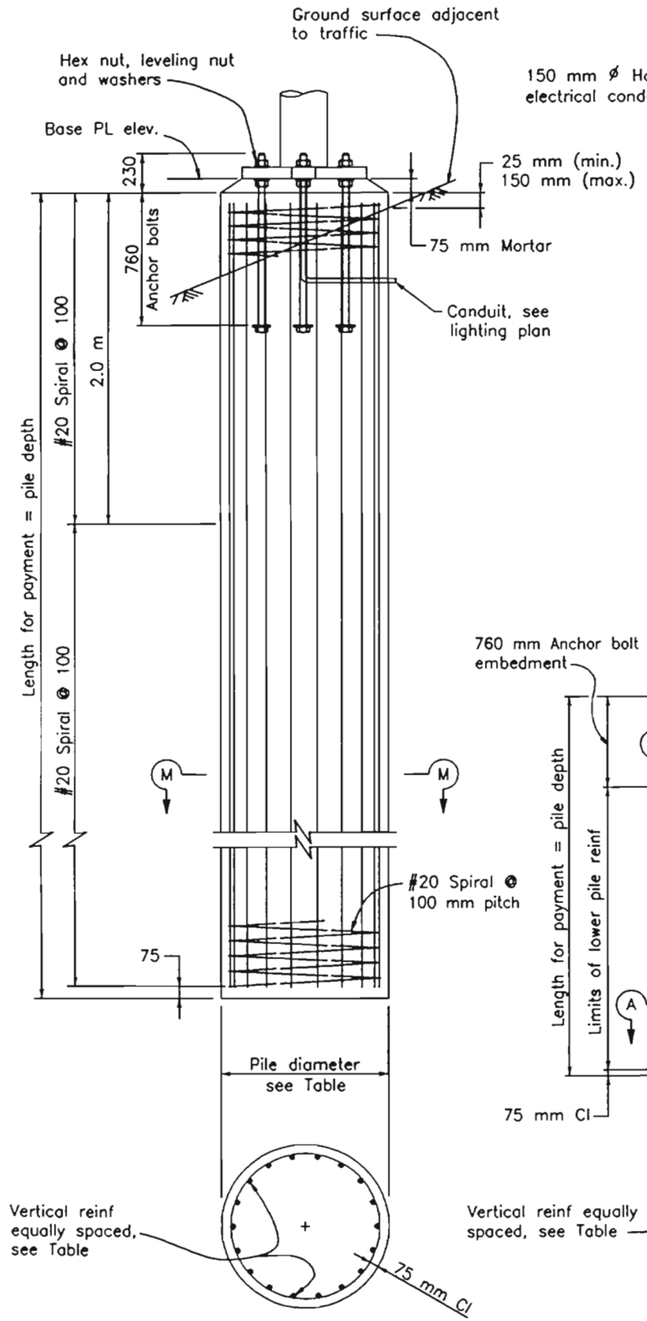

SECTION M-M

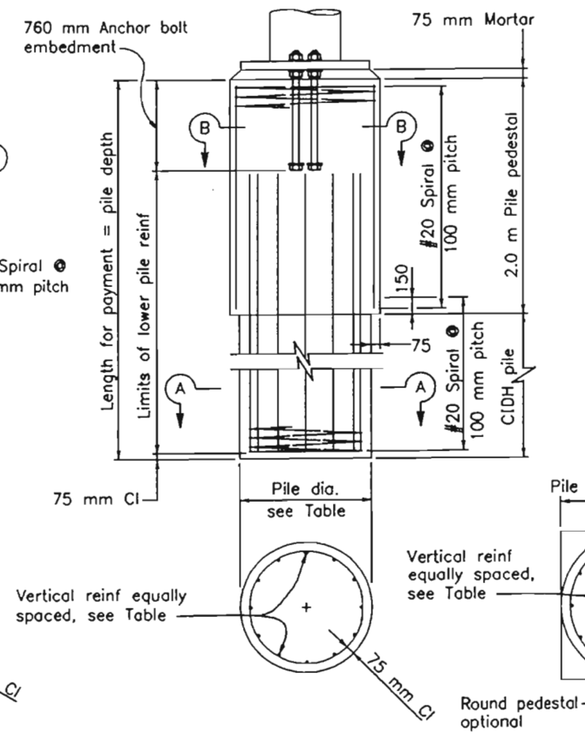

SECTION A-A

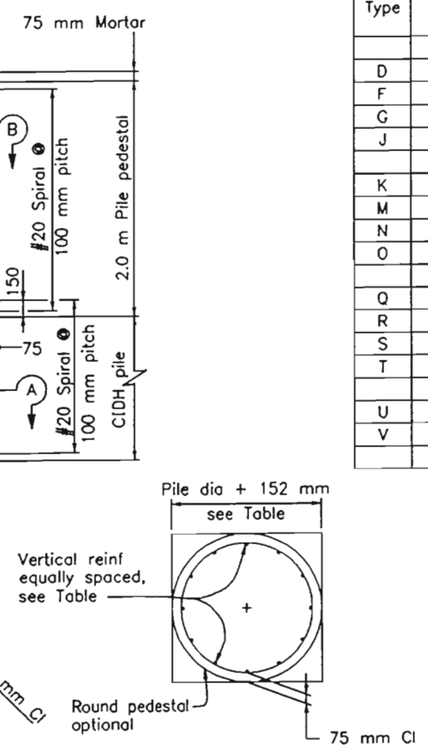

SECTION B-B

CIDH PILE FOUNDATION DETAILS

PEDESTAL / CIDH PILE FOUNDATION DETAILS

(CIDH denotes cast-in-drilled-hole)

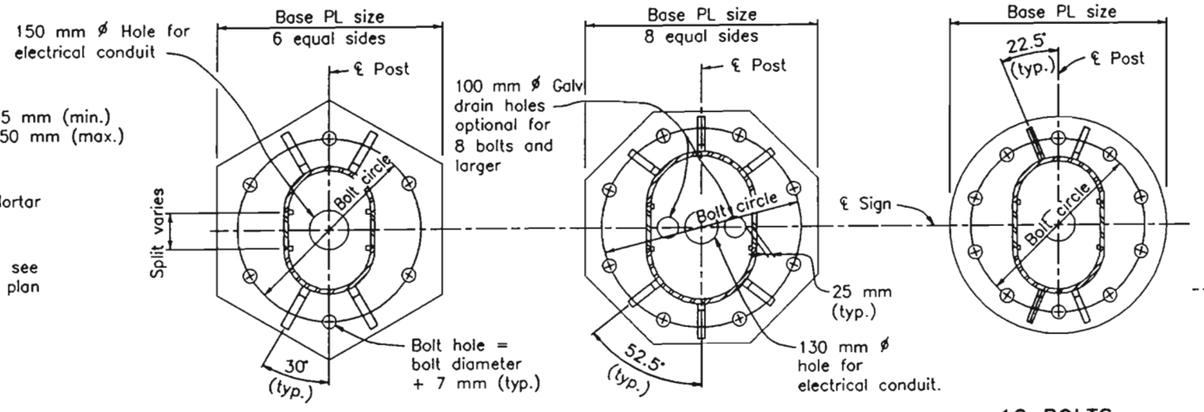

NOTE

See 6 Bolts or 8 Bolts for details not shown.

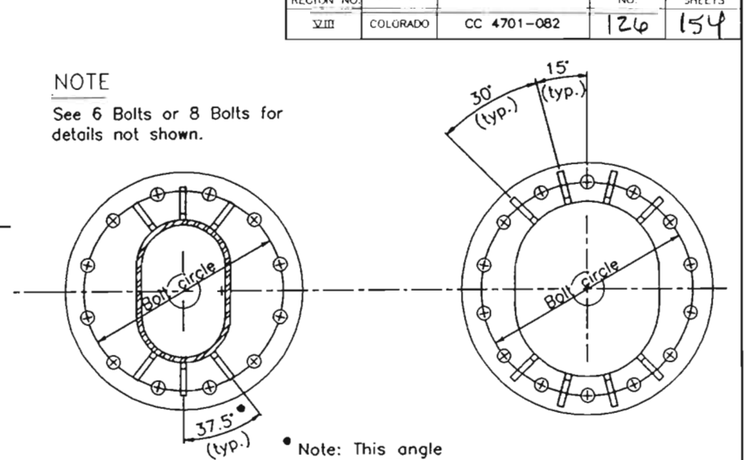

• Note: This angle is to be 30° on the 24" ø pole.

BASE PLATE DETAILS

Post Type	Nominal Pipe Size (NPS) See Note 6 in. (mm)	Split mm	Base PL Size mm	Bolt Circle mm	Anchor Bolts Dia (mm)	Pile * Dia (mm)	Vertical Reinf	Pile Depth meters
D	12 (305) x-s	–	660 x 64	559	6-57	920P	8-#30	3.7
F	12 (305) x-s	150	810 x 70	686	8-57	920P	12-#30	4.0
G	14 (356) x-s	–	690 x 64	584	6-57	920P	8-#30	4.0
J	14 (356) x-s	150	910 Dia x 70	737	10-57	920P	14-#30	5.2
K	16 (406) x-s	–	760 x 64	635	8-57	920P	11-#30	4.3
M	16 (406) x-s	150	1020 Dia x 76	838	12-64	1070P	17-#30	5.2
N	18 (457) x-s	–	810 x 70	686	8-57	920P	12-#30	5.2
O	18 (457) x-s	125	1020 Dia x 76	838	12-64	1070P	17-#30	5.8
Q	20 (508) x-s	–	910 Dia x 70	737	10-57	920P	14-#30	5.8
R	20 (508) x-s	125	1020 Dia x 76	838	12-64	1070P	17-#30	6.7
S	22 (559) x-s	–	1020 Dia x 76	838	12-64	1070P	17-#30	6.7
T	22 (559) x-s	125	1070 Dia x 64	908	14-64	1070P	24-#30	6.7
U	24 (610) x-s	–	1020 Dia x 76	838	12-64	1070P	17-#30	6.7
V	24 (610) x-s	125	1070 Dia x 64	908	14-64	1070P	24-#30	6.7

* NOTE P denotes pedestal. Pile size shown may be increased by 152 mm for the entire length of the pile or be constructed as shown in the pedestal details.

Note: Gussets are not shown elsewhere in these sheets for clarity. All pole bases are to have gussets.

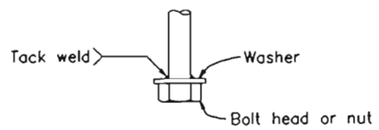

ANCHORAGE DETAIL

NOTES

1. Thread upper 250 mm and galvanize upper 300 mm of the anchor bolts.
2. Pile shall be placed against undisturbed material.
3. Provide bolt template during installation of anchor bolts.
4. Prior to erection of the post, backfill which is equivalent to the surrounding material shall be in place.
5. Pile shall be formed 150 mm minimum below ground surface.
6. Pipe sizes are based on ASTM A53 or A106. NPS = Nominal Pipe Size.

ALL DIMENSIONS ARE IN MILLIMETERS UNLESS OTHERWISE SHOWN

COLORADO DEPARTMENT OF TRANSPORTATION

OVERHEAD SIGNS – TUBULAR FOUNDATION DETAILS

NO SCALE

DATE REVISED	ISSUED BY	STANDARD PLAN NO.
	STAFF TRAFFIC BRANCH	S-614-50
MS40T	DATE: Jan. 14, 1996	SHEET 6 OF 9

REVISIONS	S-614-50	7/9

FEDERAL RD REGION NO.	DIVISION	PROJ. NO.	SHEET NO.	TOTAL SHEETS
VIII	COLORADO	CC 4701-082	127	134

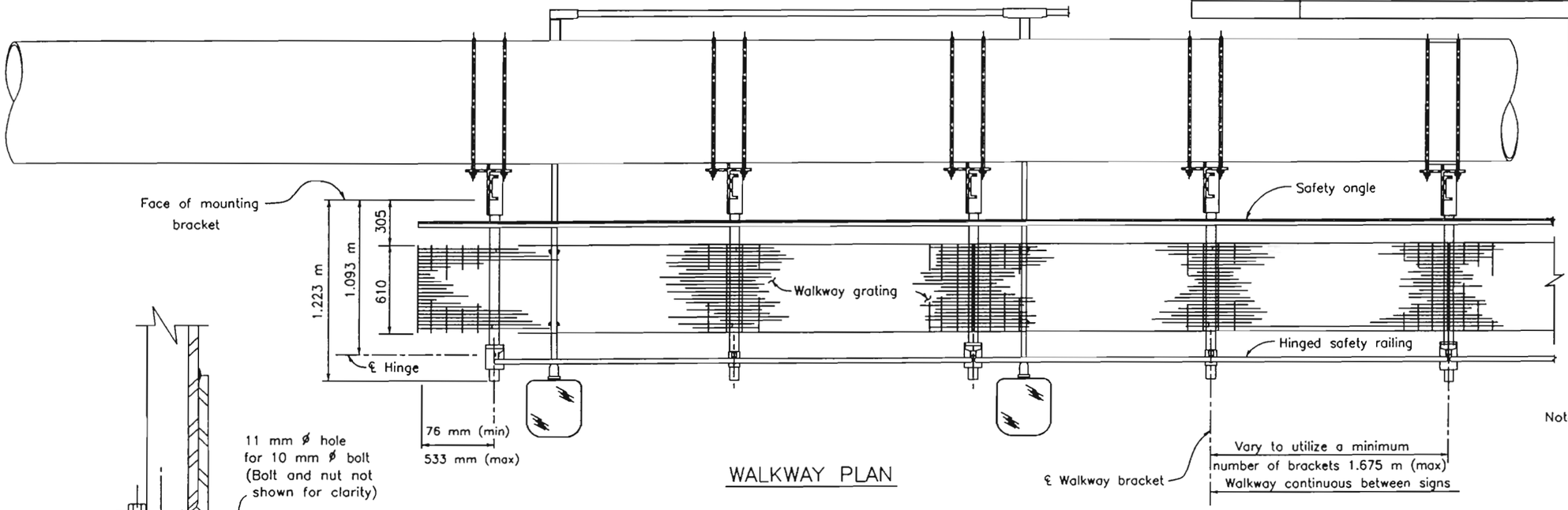

WALKWAY PLAN

Note: Sign panel and zee brackets not shown for clarity.

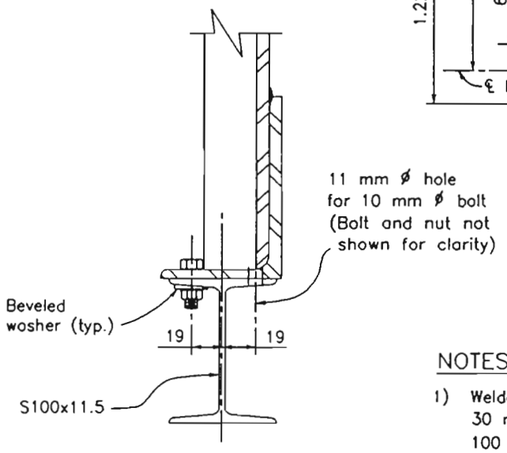

SECTION B-B

NOTES

1) Welded type grating shall have 32 mm x 3 mm bearing bars at 30 mm centers with 6 mm diameter (or equal) cross bars at 100 mm centers. If mechanical lock grating is used, it shall be equal in strength to the welded type. Alternate hold-down clips may be submitted for approval.

2) Walkway grating to be continuous (no splices) over as many walkway brackets as practical consistent with fabrication, ease of handling and assembly.

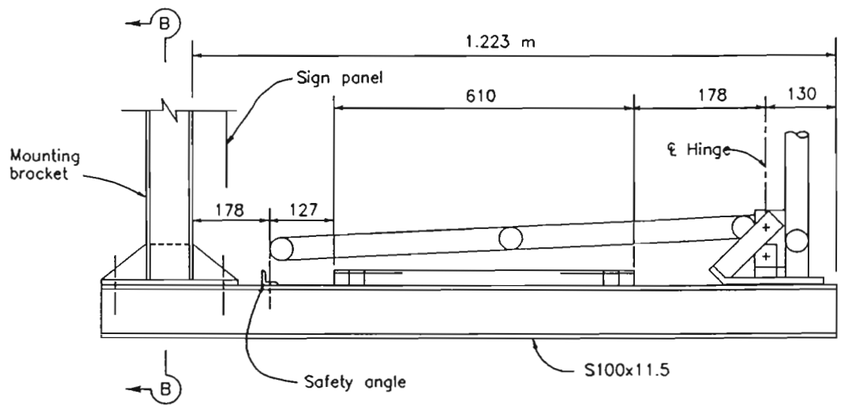

TYPICAL WALKWAY SECTION

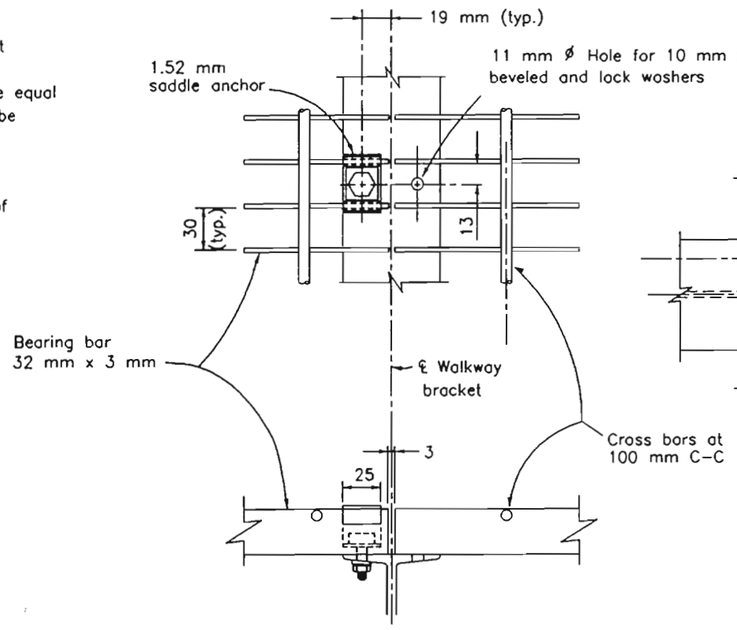

WALKWAY DETAILS

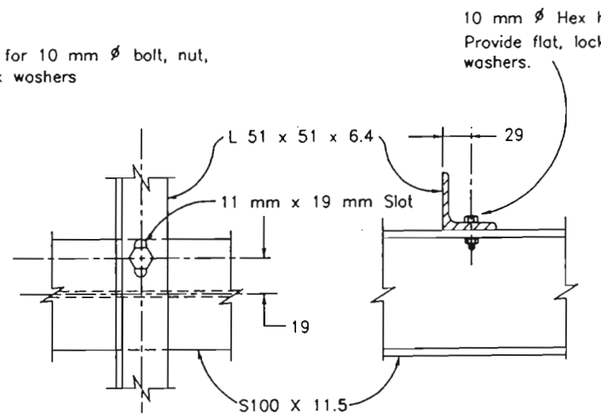

SAFETY ANGLE DETAILS

ALL DIMENSIONS ARE IN MILLIMETERS UNLESS OTHERWISE SHOWN

COLORADO DEPARTMENT OF TRANSPORTATION

OVERHEAD SIGNS
WALKWAY DETAILS

NO SCALE

DATE REVISED	ISSUED BY	STANDARD PLAN NO.
MS9	STAFF TRAFFIC BRANCH	S-614-50
	DATE: Jan. 3, 1996	SHEET 7 OF 9

REVISIONS	S-614-50	8/9

FEDERAL RD REGION NO.	DIVISION	PROJ. NO.	SHEET NO.	TOTAL SHEETS
VIII	COLORADO	CC 4701-082	128	154

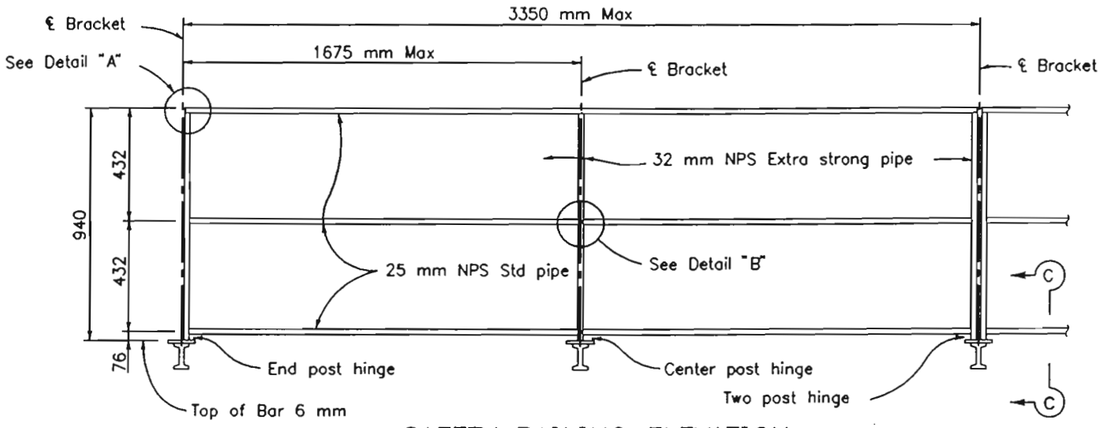

SAFETY RAILING ELEVATION

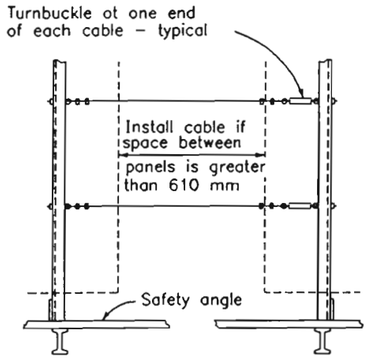

BETWEEN PANELS

SAFETY CABLE ELEVATION

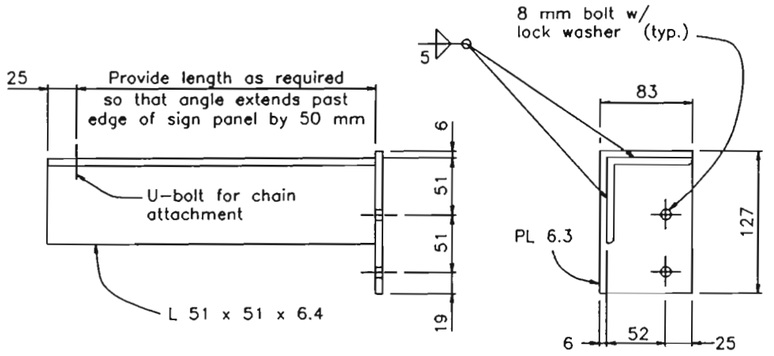

DETAIL C

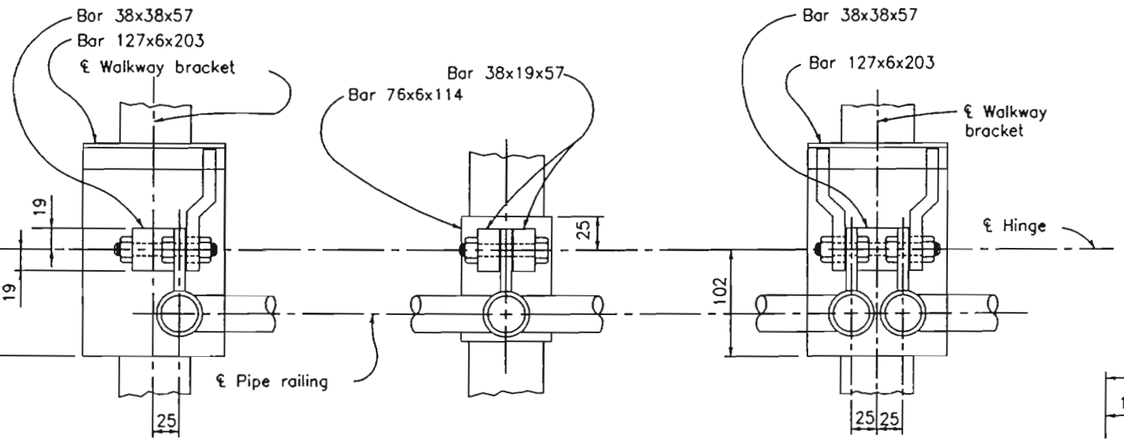

END POST CENTER POST TWO POST

HINGE – PLAN

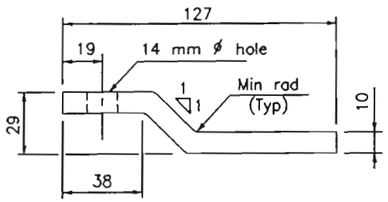

PLAN – KICKER BAR

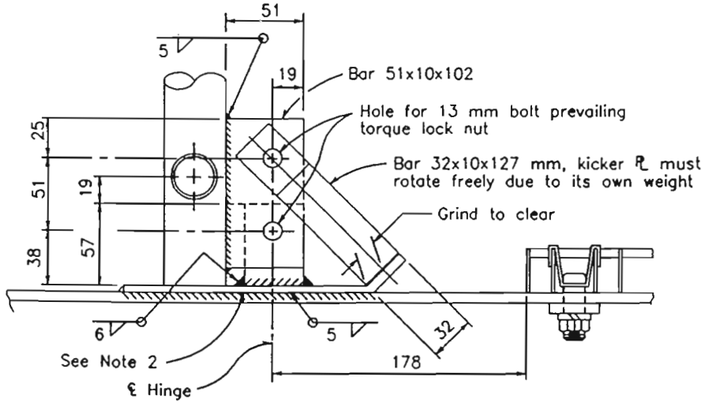

SECTION C–C

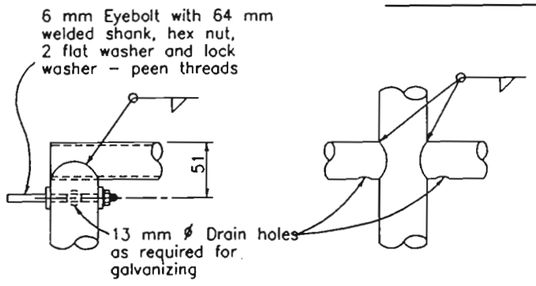

DETAIL A DETAIL B

NOTES

Alternative venting methods may be used if approved by the Engineer.

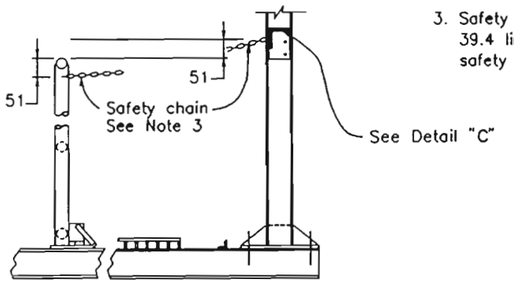

CHAIN ASSEMBLY

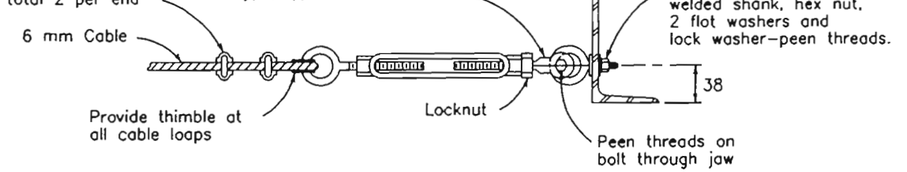

TURNBUCKLE DETAILS

NOTES

1. Special care shall be taken to insure that the complete hinge and latch assembly will hold the safety railing in a steody manner, free of wobble while in the raised position. Maximum allowable displacement from vertical at top of railing when latched sholl be 25 mm.
2. Details for bolting hinge base plate to walkway bracket may be submitted for approval.
3. Safety chain shall be 5 mm galvanized steel coil chain, approximately 39.4 links per meter. Length shall be minimum which allows lock–up of safety railing.

ALL DIMENSIONS ARE IN MILLIMETERS UNLESS OTHERWISE SHOWN

COLORADO
DEPARTMENT OF TRANSPORTATION

OVERHEAD SIGNS

WALKWAY SAFETY RAILING DETAILS

NO SCALE

ISSUED BY	STANDARD PLAN NO.
STAFF TRAFFIC BRANCH	S-614-50
DATE REVISED DATE: Jan. 14, 1996	SHEET 8 OF 9

MS11

	REVISIONS	S-614-50	9/9

FEDERAL RD REGION NO.	DIVISION	PROJ. NO	SHEET NO.	TOTAL SHEETS
VIII	COLORADO	CC 4701-082	129	154

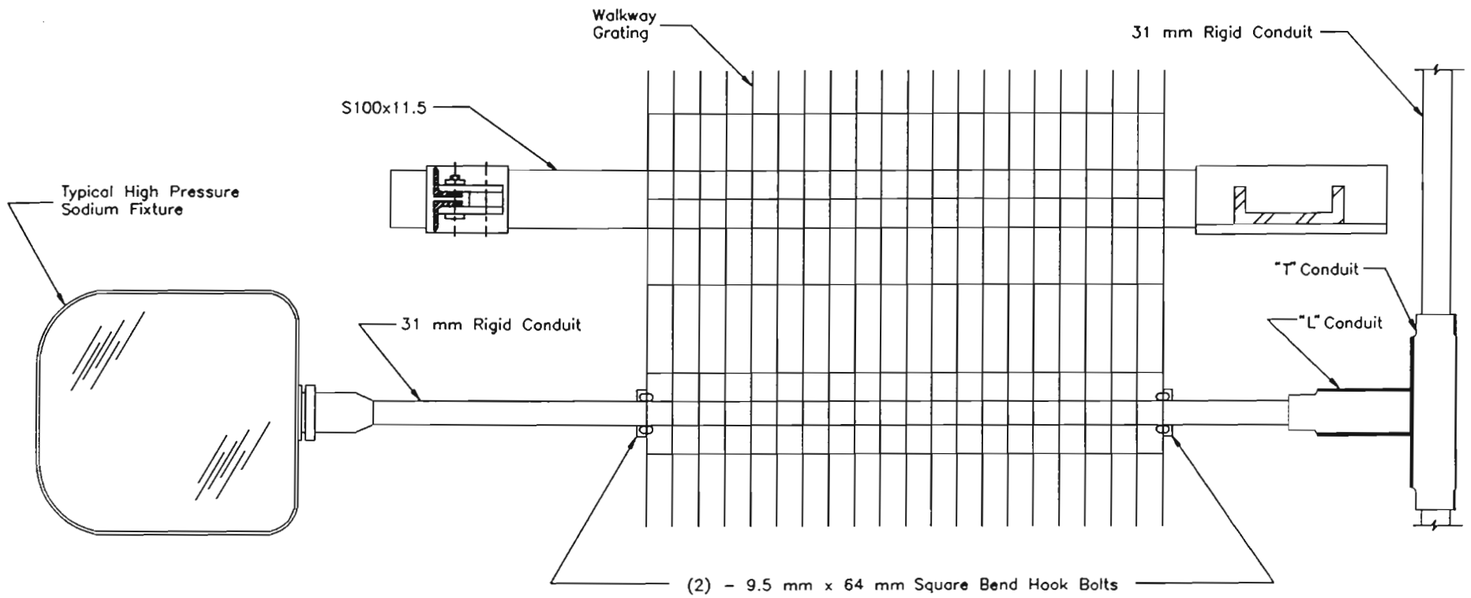

LIGHTING NOTES

1. Fixtures shall be watertight, dustproof and designed for ease of lamp replacement.
2. Lamp shall be of High Pressure Sodium type (250 Watt). Lamps and ballasts shall be designed to operate over an ambient temperature range of -30° C to +50° C.
3. Ballasts shall be of the magnetic regulator type specifically manufactured for use with high pressure sodium lamps, and shall operate at a minimum of 90% power factor. Operation shall be suitable with a line voltage variation of ±10%.
4. The type, number and spacing of fixtures shall be per manufactures specifications to maintain a moximum initial illumination of the sign face of 30 foot candles to 60 foot candles with a maximum uniformity ratio (maximum illumination/minimum illuminaton) of 5:1.
5. Fixture and mounting details will be subject to approval by the Engineer.

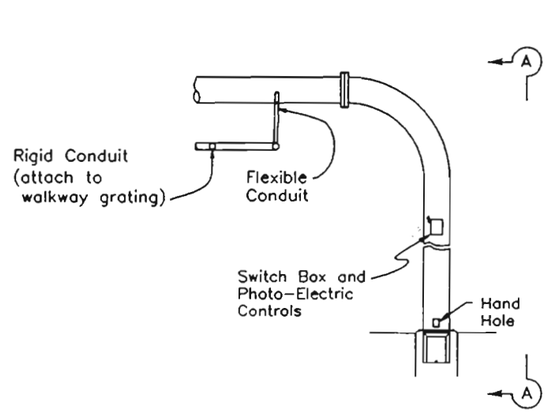

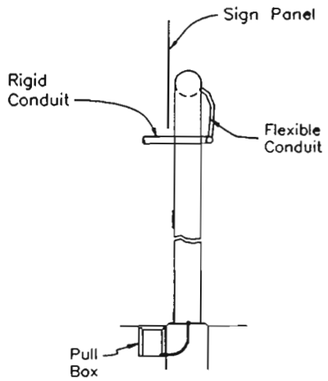

SECTION A-A

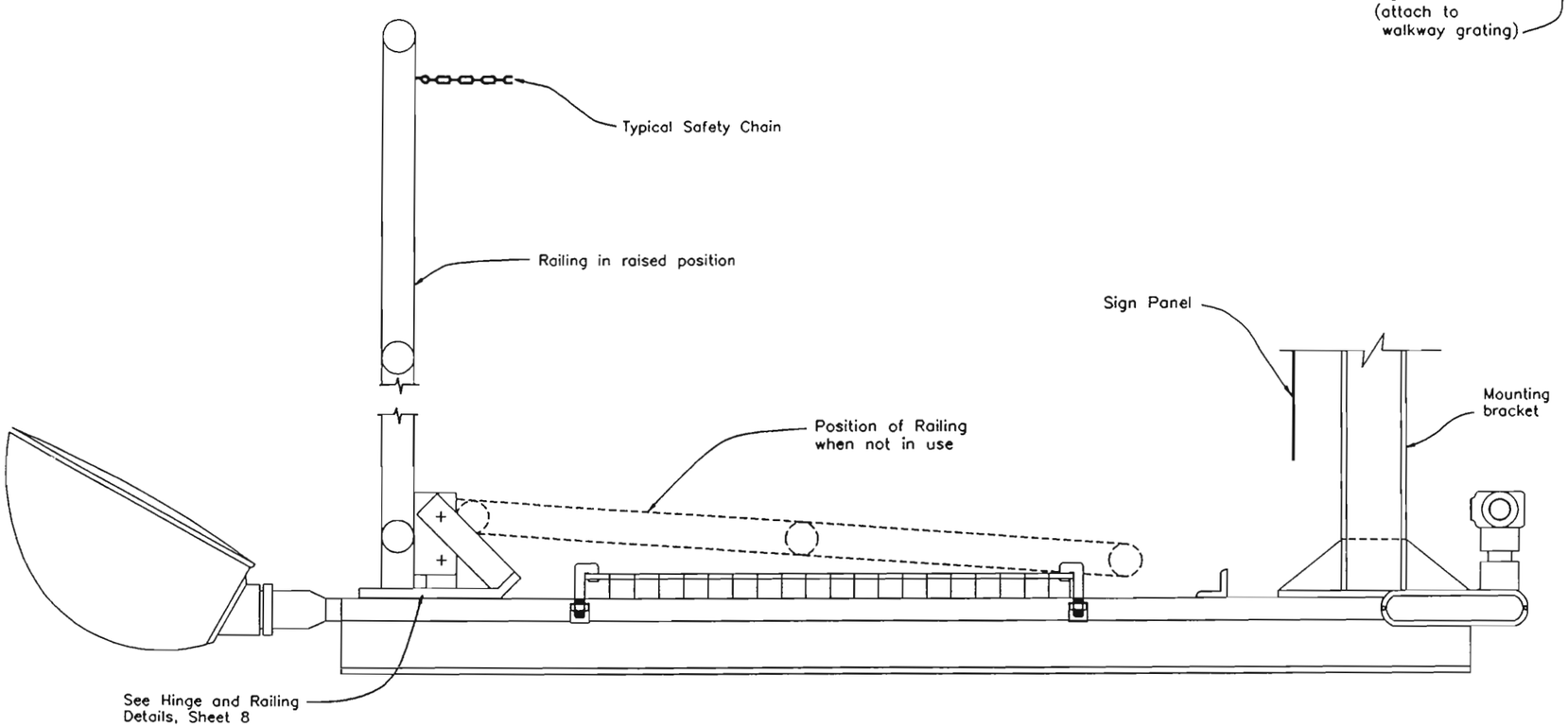

NOTE:

See other pages in this standard for details not shown. All details which are not shown on this sheet have been ommitted for clarity.

COLORADO
DEPARTMENT OF TRANSPORTATION

OVERHEAD SIGNS
LIGHTING DETAILS
NO SCALE

ISSUED BY	STANDARD PLAN NO.
STAFF TRAFFIC BRANCH	S-614-50
DATE: Jan. 3, 1996	SHEET 9 OF 9

MLIGHT

DATE REVISED

AS CONSTRUCTED				
NO REVISIONS 12-3-96	REVISED	VOID		

FEDERAL HD REGION NO.	DIVISION	PROJ. NO.	SHEET NO.	TOTAL SHEETS
VIII	COLORADO	CC 4701-082	130	154

REVISIONS			

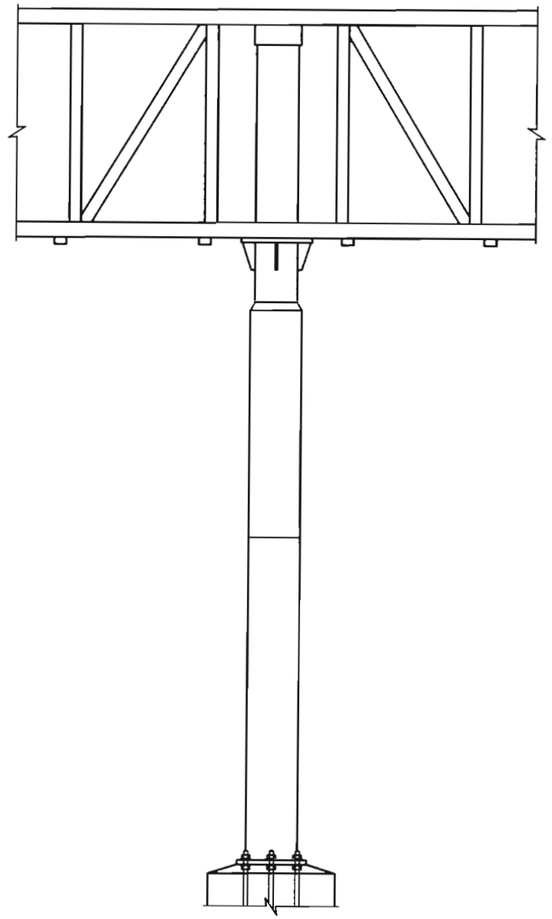

ELEVATION

EXISTING SIGN STRUCTURE TO BE RELOCATED FROM STA 1+212 EBCL TO NEW FOUNDATION AT STA 1+145 EBCL. PROVIDE WITH NEW EB SIGN PANEL AND RESET EXISTING WB PANEL. SEE SIGNING PLAN FOR ADDITIONAL INFORMATION.

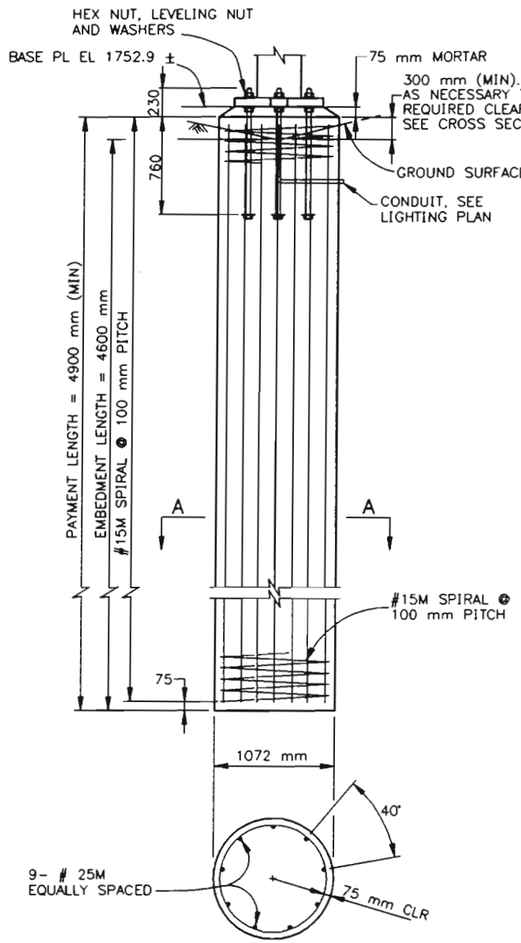

SECTION A–A

CAISSON DETAILS

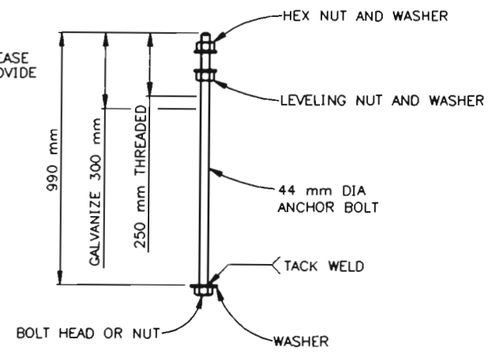

ANCHOR BOLT DETAIL

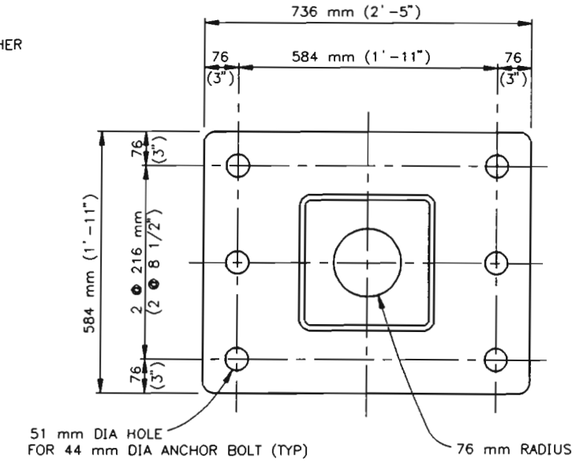

EXISTING BASE PLATE DETAIL

NOTES

ALL WORK SHALL BE DONE IN ACCORDANCE WITH THE STANDARD SPECIFICATIONS APPLICABLE TO THE PROJECT.

CONCRETE FOR CAISSONS SHALL BE CLASS BZ. REINFORCING STEEL; fy=400 MPa

ANCHOR BOLTS SHALL BE MADE FROM STEEL BAR CONFORMING TO AASHTO M314-90 WITH 380 MPa MIN. YIELD STRENGTH AND 517 MPa MIN. TENSILE STRENGTH.

ANCHOR BOLTS SHALL BE HELD IN PLACE USING A STEEL TEMPLATE UNTIL CONCRETE REACHES INITIAL SET.

THIS STRUCTURE SHALL BE GROUNDED IN ACCORDANCE WITH APPLICABLE ELECTRICAL CODES.

DURING SIGN ERECTION THE POST SHALL BE RAKED AS NECESSARY WITH THE USE OF THE LEVELING NUTS TO MAKE THE SIGN PANEL LEVEL.

AT FINAL POSITION OF POST ALL TOP AND BOTTOM ANCHOR BOLTS SHALL BE WRENCH TIGHTENED AGAINST BASE PLATE.

FELSBURG HOLT & ULLEVIG

C-470/YOSEMITE INTERCHANGE

SIGN #61 DETAILS

DATE	JOB NO.	DRAWN BY	CHECKED BY	DRAWING NO.
MAR 96	95-088			X

COMPUTER GENERATED DRAWING DO NOT ALTER MANUALLY

AS CONSTRUCTED			
NO REVISIONS 12-3-96	REVISED	VOID	

FEDERAL RD REGION NO	DIVISION	PROJ. NO.	SHEET NO.	TOTAL SHEETS
VIII	COLORADO	CC 4701-082	131	154

REVISIONS		

University Blvd	1/2
Quebec St	3 1/2
Yosemite St	4 1/2

MODIFY LEGEND (MATCH EXISTING LETTER AND NUMERAL HEIGHTS)

EXISTING BUTTERFLY STRUCTURE

EASTBOUND PANEL – EXISTING STA. 1104+00

(34)

Quebec St	1 1/4
Yosemite St	2 1/4
Junction I-25	3 1/2

MODIFY LEGEND (MATCH EXISTING LETTER AND NUMERAL HEIGHTS)

EXISTING BUTTERFLY STRUCTURE

EASTBOUND PANEL – EXISTING STA. 1224+00

(35)

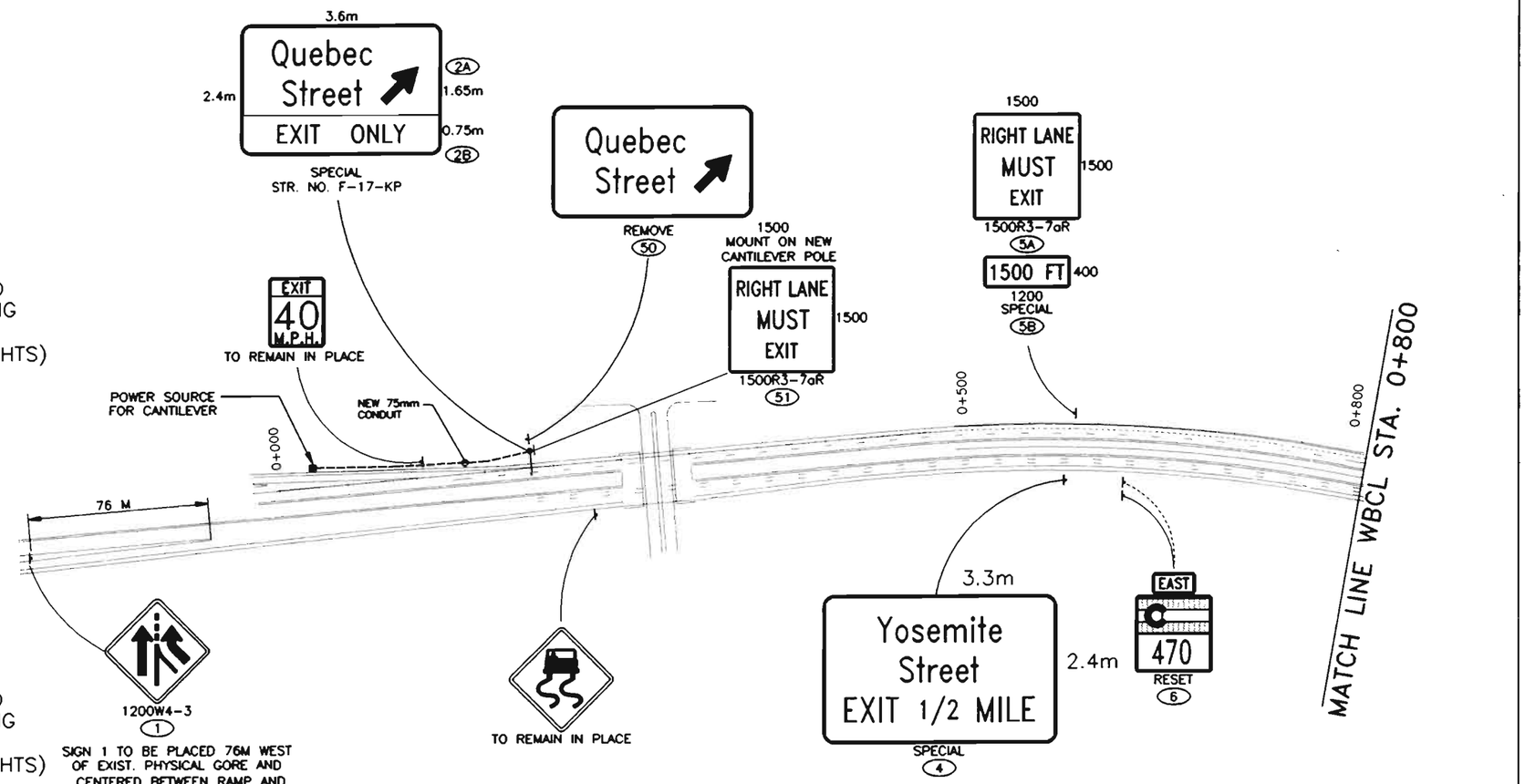

N

Original Scale 1:2000

NOTE: WHOLE NUMBERS INDICATE MILLIMETERS
DECIMAL NUMBERS INDICATE METERS.

FELSBURG HOLT & ULLEVIG

C-470/YOSEMITE INTERCHANGE

SIGNING PLAN
C-470 WBCL STA. 0+000 TO STA. 0+800

DATE	PROJECT NO.	DESIGNED BY JF	SHEET NO. 1	DRAWING NO.
FEB 96	95-088	DRAWN BY SS	OF 3 SHEETS	SS-5
		CHECKED BY DB		

AS CONSTRUCTED			
NO REVISIONS ☐	REVISED 12-3-96	VOID ☐	

FEDERAL RD REGION NO.	DIVISION	PROJ. NO.	SHEET NO.	TOTAL SHEETS
VIII	COLORADO	CC 4701-082	132	154

REVISIONS		

REMOVE
Quebec Street EXIT 1/2 MILE (52)

4.2m × 3.0m
Quebec Street EXIT 1/2 MILE (7A) 2.25m
EXIT ↓ ONLY (7B) 0.75m
STR. NO. F-17-KO

MATCH LINE WBCL STA. 0+800

SPEED LIMIT 55 RESET (8)

Denver Colo Spgs Exit 1 Mile
LAST EXIT BEFORE TOLLWAY
REMOVE (38)

MILE 2 5 RESET (9)

WEST 470 RESET (11)

MILE 2 5 RESET (10)

NEW 75mm CONDUIT

POWER SOURCE FOR CANTILEVER

NEW 75 mm CONDUIT

BUCKLE UP IT'S THE LAW RESET (13)

REMOVE * (15)

1+000

1+500

1200 W4-1R (16)

SPEED LIMIT 55 TO REMAIN IN PLACE

1+800

1+878.735

EXIT 45 M.P.H. 1200W13-2(45) (14)

4.5m × 1.8m
Yosemite Street
SPECIAL (12)

900W3-3 (18)

RIGHT LANE ENDS
1500 FT
REMOVE (SIGN REMOVAL TO COINCIDE WITH FINAL STRIPING) (21)

4.2m × 4.2m
Denver Colo Spgs Exit 1 Mile
LAST EXIT BEFORE TOLLWAY
SPECIAL (3A) 3.25m
SPECIAL (38) 0.95m
STR. NO. F-17-KN

6.0m × 2.1m

Yosemite St.	1/4	NEW EB PANEL
Junction I-25	3/4	
E-470 TOLLWAY	3/4	
Quebec St	3/4	RESET WB PANEL
University Blvd	3 3/4	
Broadway	5 1/4	

(61)
SIGN STRUCTURE F-17-JE
RESET BUTTERFLY STRUCTURE ONTO NEW CAISSON FOUNDATION. (SEE SHEET 130)

1.5m × 1.5m
EXIT
SPECIAL (17)

1.5m × 1.2m
YOSEMITE STREET
SPECIAL (19A)

WRONG WAY 900R5-1a (19B)

WRONG WAY 900R5-1a (20)

Denver Colo Spgs Exit 1/2 Mile
USE RIGHT LANE
~~TO REMAIN IN PLACE~~
REMOVED

120M-3L (53) TO (56)

120M-3R (57) TO (60)

Original Scale 1:2000

NOTE: OM-3L & OM-3R TO BE PLACED ON U-3 POST AT 2M SPACING DRIVEN THROUGH EXISTING PAVEMENT.

NOTE: WHOLE NUMBERS INDICATE MILLIMETERS
DECIMAL NUMBERS INDICATE METERS.

FELSBURG HOLT & ULLEVIG

C-470/YOSEMITE INTERCHANGE

SIGNING PLAN
C-470 WBCL STA. 0+800 TO STA. 1+878.735

DATE	PROJECT NO.	DESIGNED BY JF	DRAWN BY SS	CHECKED BY DB	SHEET NO. 2 OF 3 SHEETS	DRAWING NO. SS-6
FEB 96	95-088					

AS CONSTRUCTED					
NO REVISIONS 12-3-96	REVISED		VOID		

FEDERAL RD REGION NO.	DIVISION	PROJ. NO.	SHEET NO.	TOTAL SHEETS
VIII	COLORADO	CC 4701-082	133	154

REVISIONS		

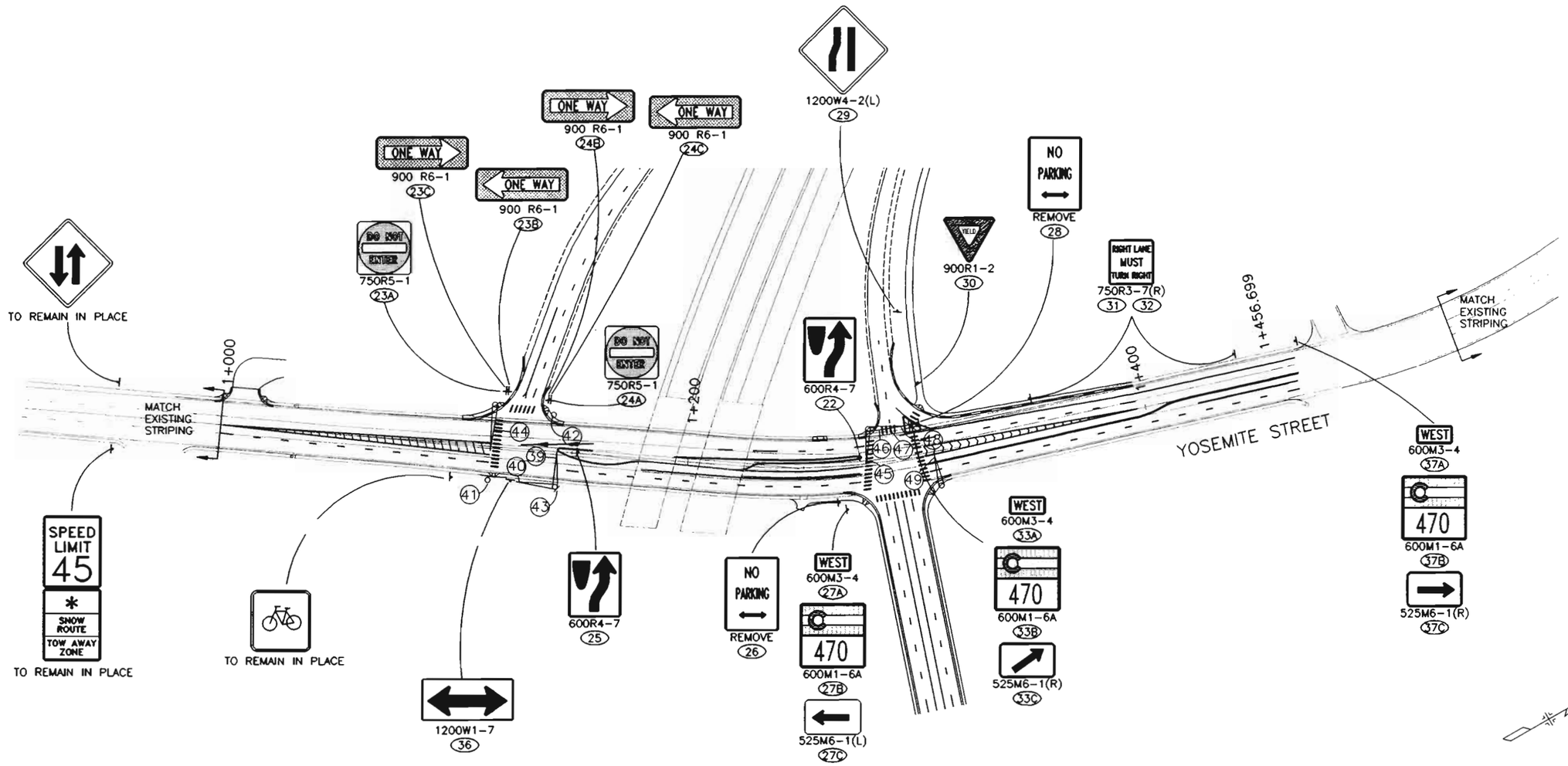

NOTE: WHOLE NUMBERS INDICATE MILLIMETERS
DECIMAL NUMBERS INDICATE METERS.

Original Scale 1:1000

SIGNS

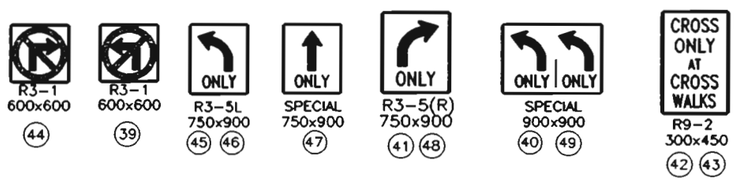

FELSBURG HOLT & ULLEVIG

C-470/YOSEMITE INTERCHANGE

SIGNING PLAN
YOSEMITE ST. STA. 0+000 TO STA. 0+456.699

DATE	PROJECT NO.	DESIGNED BY	DRAWN BY	CHECKED BY	SHEET NO.	OF	SHEETS	DRAWING NO.
FEB 96	95-088	JF	SS	DB	3	3		SS-7

AS CONSTRUCTED				
NO REVISIONS 12-3-96	REVISED	VOID		

FEDERAL RD REGION NO	DIVISION	PROJ NO	SHEET NO	TOTAL SHEETS
VIII	COLORADO	CC 4701-082	134	154

REVISIONS

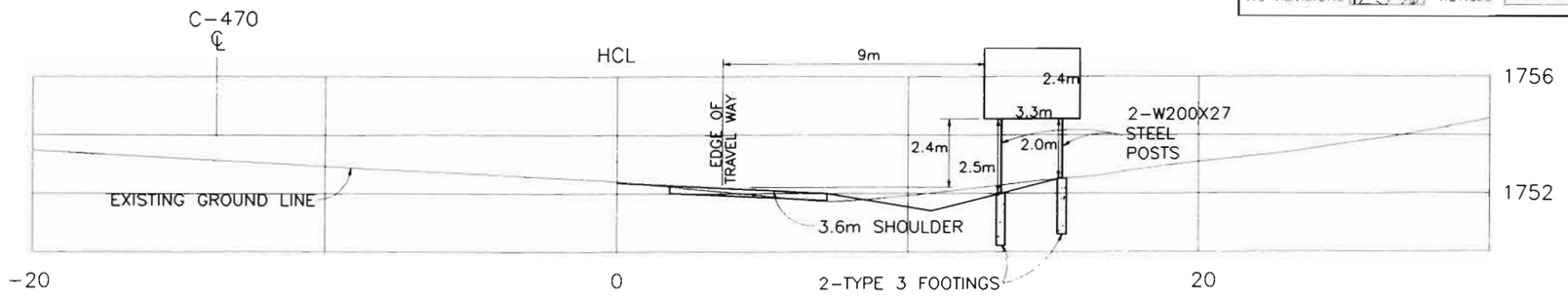

STA. 0+575 C-470 EB WIDENING
SIGN NO. 4

NOTE:
ALL REFERENCES TO "PILE" ON THIS CROSS-SECTION IS NOTED TO COMPLIMENT STANDARD PLAN NO. S-614-50. "PILE" QUANTITIES TO BE PAID FOR AS "DRILLED CAISSON".

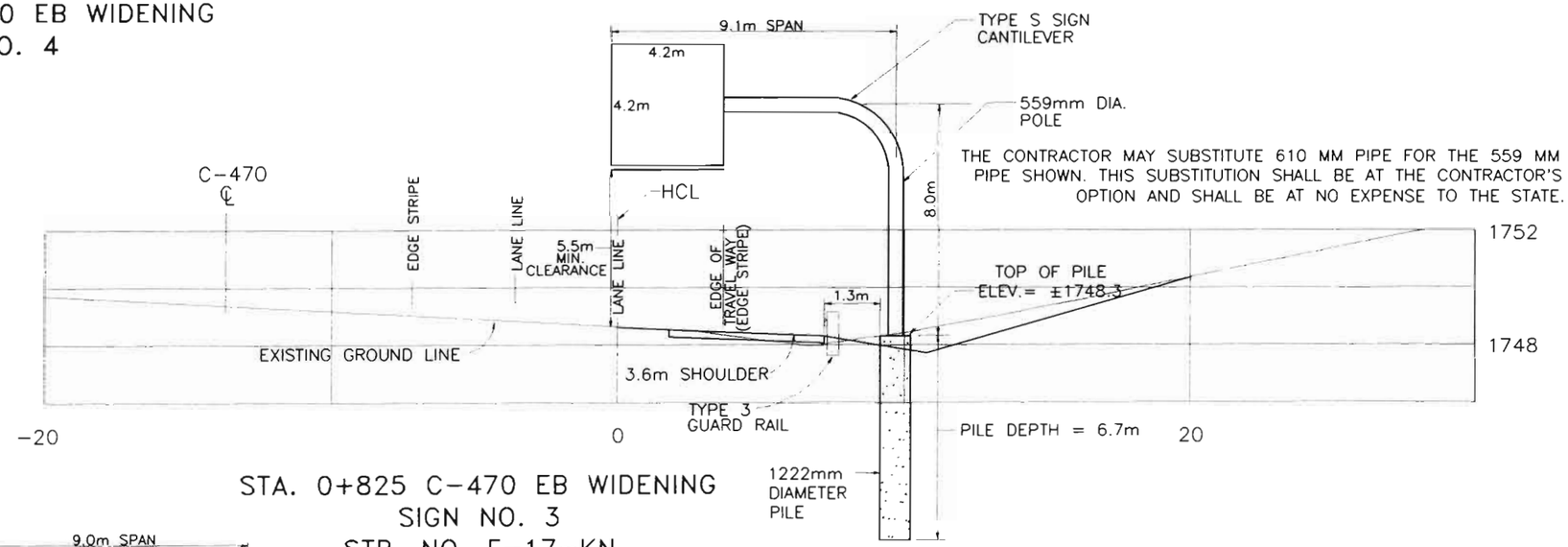

THE CONTRACTOR MAY SUBSTITUTE 610 MM PIPE FOR THE 559 MM PIPE SHOWN. THIS SUBSTITUTION SHALL BE AT THE CONTRACTOR'S OPTION AND SHALL BE AT NO EXPENSE TO THE STATE.

STA. 0+825 C-470 EB WIDENING
SIGN NO. 3
STR. NO. F-17-KN

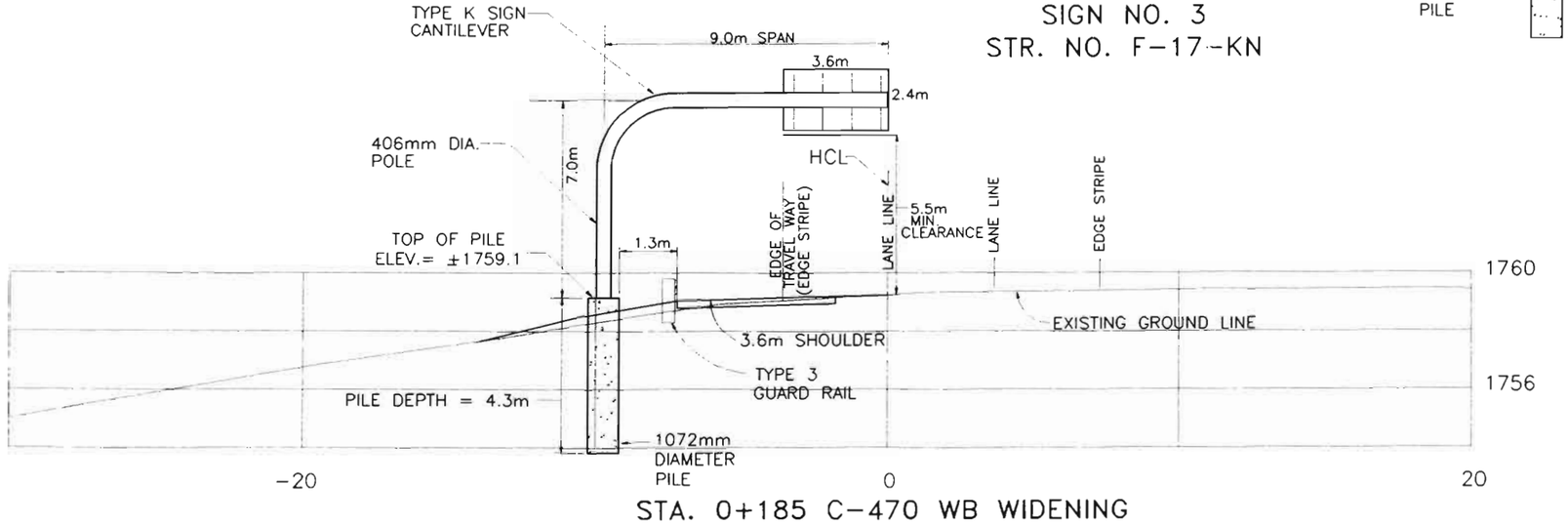

STA. 0+185 C-470 WB WIDENING
SIGN NO. 2
STR. NO. F-17-KP

Original Scale 1:100

FELSBURG HOLT & ULLEVIG

C-470/YOSEMITE INTERCHANGE				
SIGN CROSS-SECTIONS #2, 3, 4				
DATE FEB 96	PROJECT NO 95-088	DESIGNED BY JGF DRAWN BY JGF CHECKED BY RRF	SHEET NO. 1 OF 2 SHEETS	DRAWING NO. SS-8

COMPUTER GENERATED DRAWING DO NOT ALTER MANUALLY

AS CONSTRUCTED

NO REVISIONS 12-3-96 REVISED VOID

FEDERAL RD REGION NO	DIVISION	PROJ NO	SHEET NO	TOTAL SHEETS
VIII	COLORADO	CC 4701-082	135	154

REVISIONS		

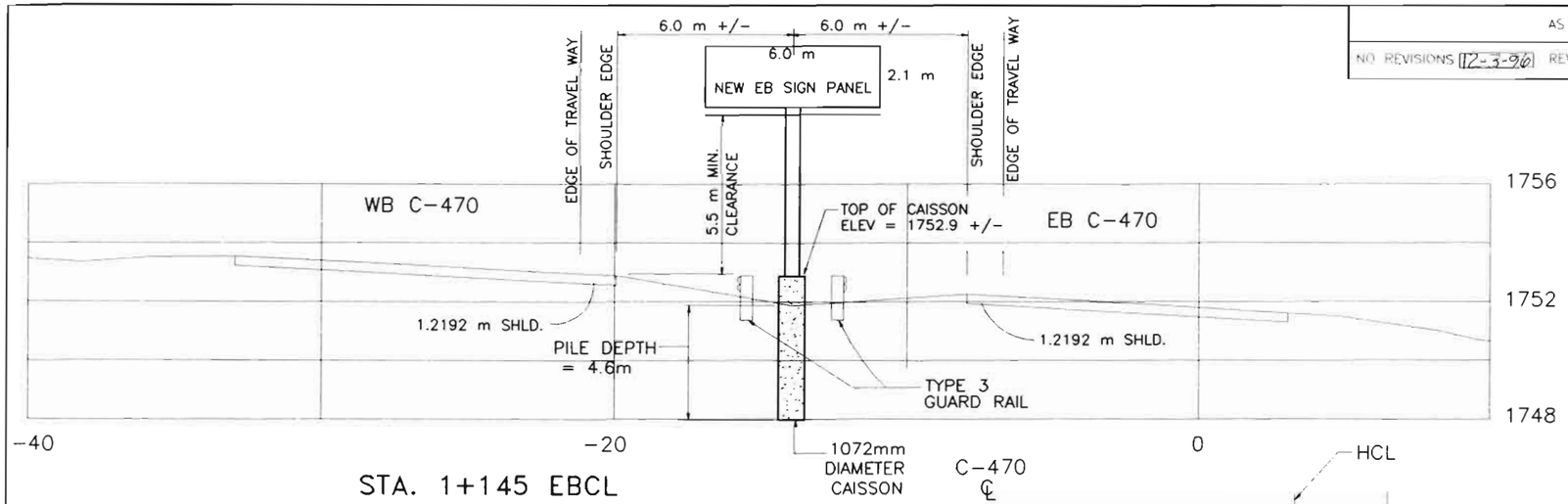

STA. 1+145 EBCL
SIGN NO. 61
STR. NO. F-17-JE

NOTE: EXISTING STRUCTURE RELOCATED FROM STA 1+212 EBCL TO NEW FOUNDATION AT THIS LOCATION. SEE DETAILS

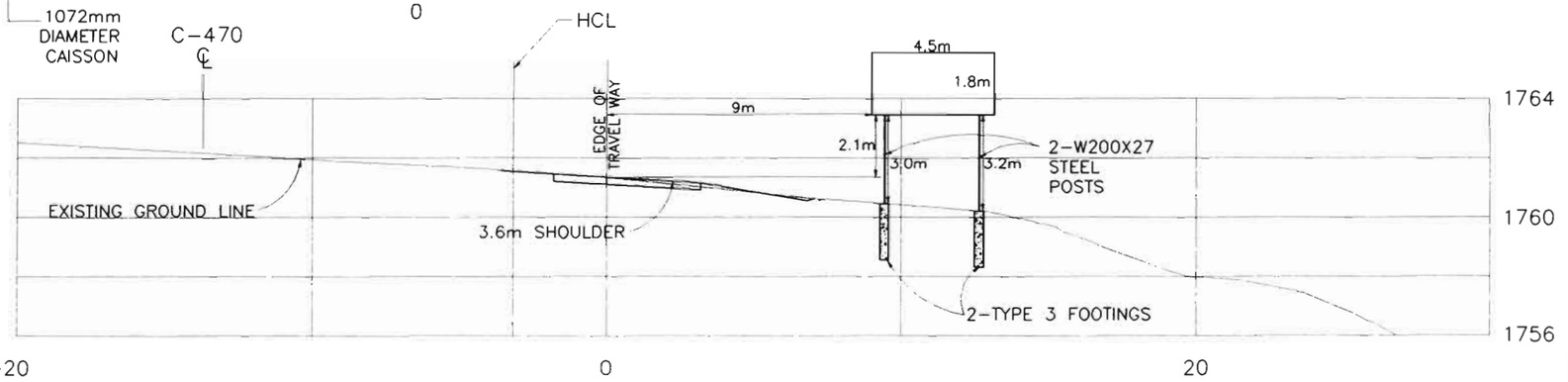

STA. 1+400 C-470 EB WIDENING
SIGN NO. 12

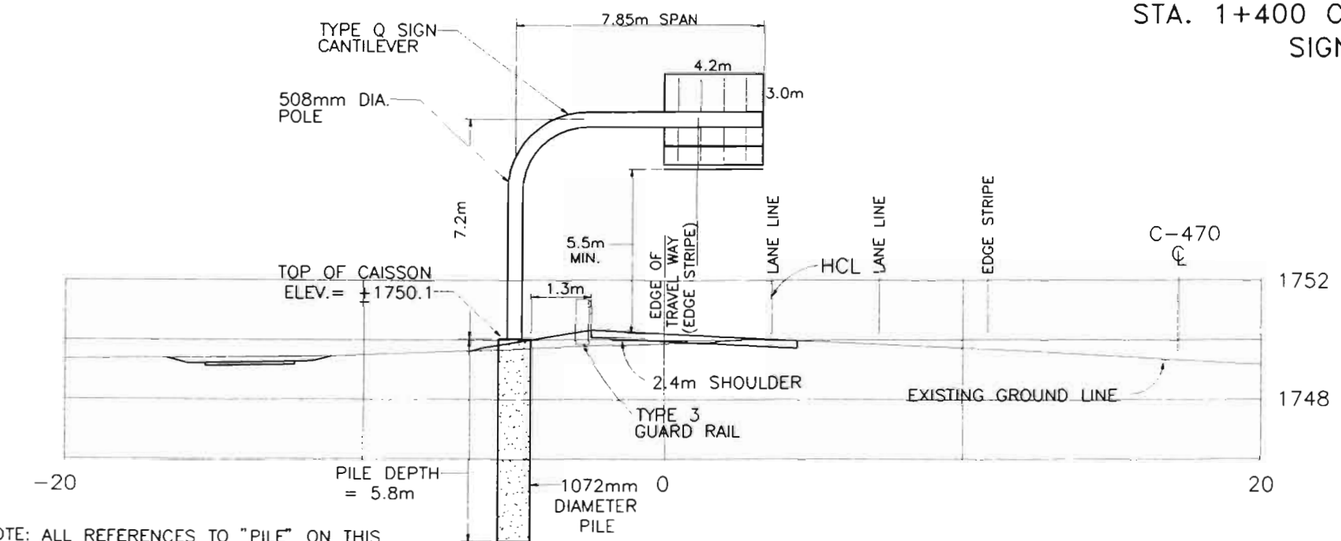

NOTE: ALL REFERENCES TO "PILE" ON THIS CROSS-SECTION IS NOTED TO COMPLIMENT STANDARD PLAN NO. S-614-50. "PILE" QUANTITIES TO BE PAID FOR AS "DRILLED CAISSON".

STA. 0+805 C-470 WB WIDENING
SIGN NO. 7
STR. NO. F-17-KO

Original Scale 1:100

FELSBURG HOLT & ULLEVIG

C-470/YOSEMITE INTERCHANGE

SIGN CROSS-SECTIONS #7, 12

DATE	PROJECT NO	DESIGNED BY JGE	DRAWN BY JGE	CHECKED BY RRF	SHEET NO 2 OF 2 SHEETS	DRAWING NO.
FEB 96	95-088					SS-9

COMPUTER GENERATED DRAWING DO NOT ALTER MANUALLY

AS CONSTRUCTED				
NO REVISIONS ☐ 12-3-96	REVISED ☐	VOID ☐		

FEDERAL RD REGION NO.	DIVISION	PROJ NO.	SHEET NO.	TOTAL SHEETS
VIII	COLORADO	CC 4701-082	136	154

REVISIONS		

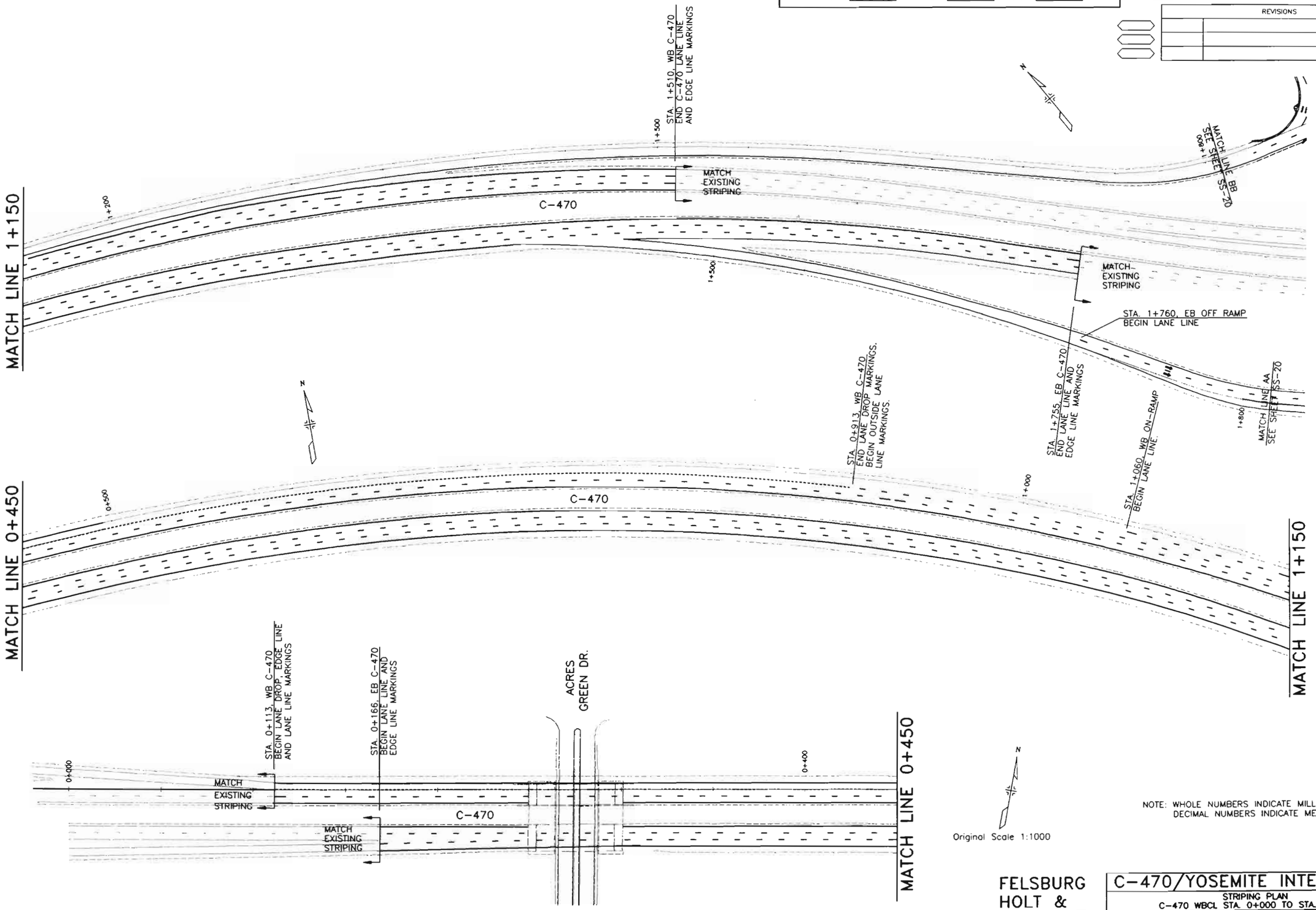

Original Scale 1:1000

NOTE: WHOLE NUMBERS INDICATE MILLIMETERS
DECIMAL NUMBERS INDICATE METERS.

FELSBURG HOLT & ULLEVIG

C-470/YOSEMITE INTERCHANGE

STRIPING PLAN
C-470 WBCL STA. 0+000 TO STA. 1+800

DATE	PROJECT NO.	DESIGNED BY	DRAWN BY	CHECKED BY	SHEET NO.	OF	SHEETS	DRAWING NO.
FEB 96	95-088	RF	SS	DB	1	2		SS-19

AS CONSTRUCTED			
NO REVISIONS 12-3-96	REVISED 12-	VOID	

FEDERAL RD REGION NO.	DIVISION	PROJ. NO.	SHEET NO.	TOTAL SHEETS
VIII	COLORADO	CC 4701-082	137	134

REVISIONS		

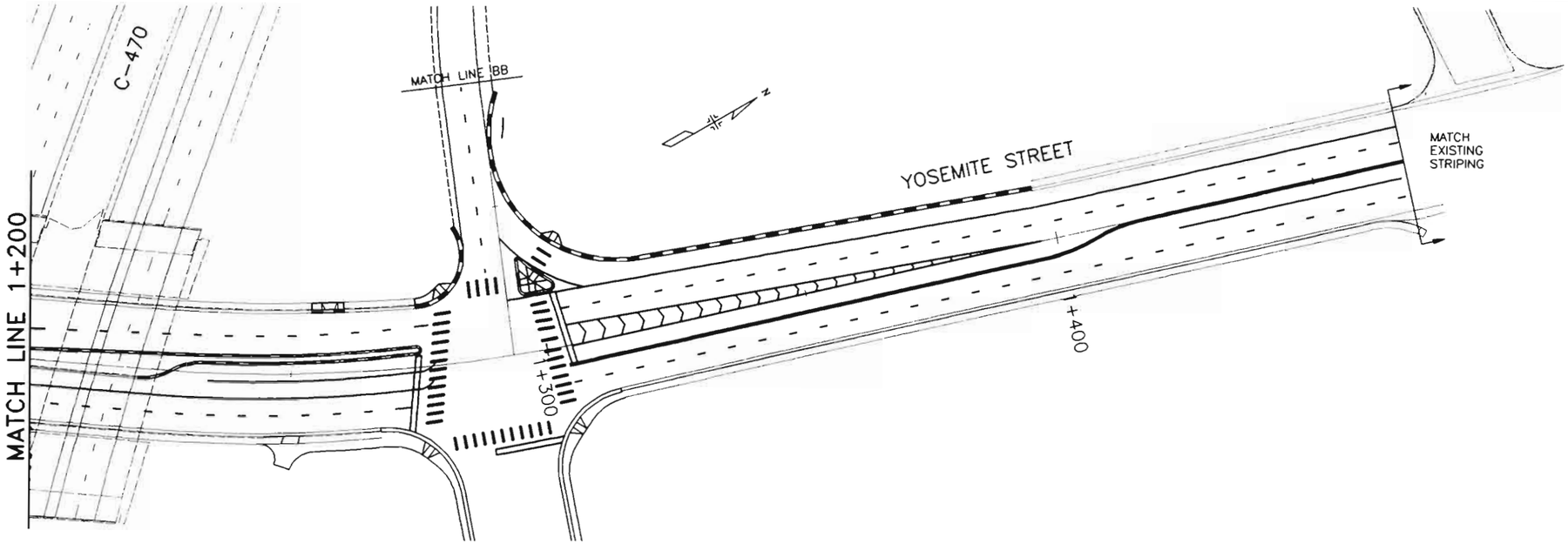

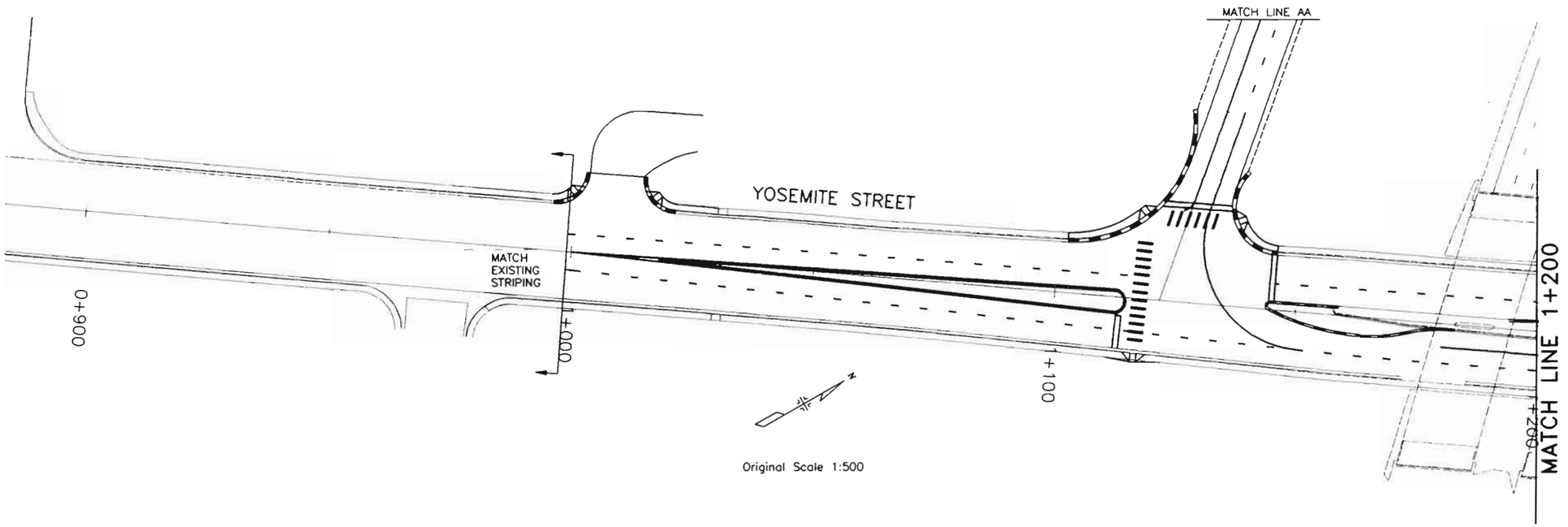

Original Scale 1:500

NOTE: WHOLE NUMBERS INDICATE MILLIMETERS
DECIMAL NUMBERS INDICATE METERS.

FELSBURG HOLT & ULLEVIG

C-470/YOSEMITE INTERCHANGE

STRIPING PLAN
YOSEMITE ST. STA. 1+000 TO STA. 1+456.699

DATE	PROJECT NO.	DESIGNED BY JF	SHEET NO. 2	DRAWING NO.
JAN 96	95-088	DRAWN BY SS	OF 2 SHEETS	SS-20
		CHECKED BY DB		

AS CONSTRUCTED			
NO REVISIONS ☐	REVISED 12-3-96	VOID ☐	

FEDERAL RD REGION NO.	DIVISION	PROJ. NO.	SHEET NO.	TOTAL SHEETS
VIII	COLORADO	CC 4701-082	138	154

REVISIONS		

NOTES

1. Except as modified in the plans, all work shall be in accordance with "Standard Specifications for Road and Bridge Construction", 1991 and "Standards Plans", November 1992, by the Colorado Department of Transportation (CDOT).
2. Conduit, pole, detector and controller cabinet locations are approximate. Exact location shall be determined by the Engineer in the field. Traffic signal poles and mast arms shall not be installed until exact locotion of pole bases is field verified. Douglas County is responsible for ordering signal poles and mast arms. The Contractor shall pick up signal poles and mast arms from Douglas County at 3030 North Industriol Way, Castle Rock, Co. Contractor to contact Douglas County (Carlos Zambrano, 660-7475) a minimum of 48 hours and a maximum of 96 hours prior to starting traffic signal construction.
3. All existing utility locations are approximate. The Contractor shall field verify the exact locatian of all existing utilities before commencing work and agrees to be fully responsible for any and all damages which may occur by the Contractor's foilure to exactly locate and preserve any and all underground utilities.
4. Payment shall be made only for items in the pay item list. All other items shall be considered incidental to the work.
5. All signal heads shall be polycarbonate type and black in color. Traffic signal poles shall be black in color.
6. The Contractor shall submit a traffic control plan for construction to the Engineer with the permit application. A public way work permit will not be issued without an approved traffic control plan for traffic control during construction.
7. The controller cabinet shall be installed such that with the front door open a technician views both the controller and the intersection.
8. The controller shall be a Type 170 and the controller cabinet shall be o Model 336S.
9. Mast arm signal heads shall be maunted approximately level with one another, with a 5.2 to 5.8 meter clearance above pavement grade at its highest elevation. All traffic signal vehicle heads shall be centered over the approach through and left turn lanes.
10. The contractor shall provide the Engineer with ot least four (4) sets of equipment specifications/descriptions and obtain approvals before ordering the equipment.
11. Upon completion of the work, the Contractar shall submit record drawings, corrected plans and any additional data required by the Engineer showing in detail all construction changes.
12. An electrical permit and subsequent inspection by Douglas County is required before Public Service Company of Colorado will execute power to the intersection. Public Service contact: Cheri Weers ot 571-2505.
13. All pull boxes shall be constructed of fiberglass reinforced polymer concrete.
14. Existing curb and gutter, and sidewalk shall not be disturbed during placement of conduit. Conduit under these areas shall be placed by moling, boring or hand digging. Trenching is ollowed only in dirt or grass areas, and in Yosemite St. because of Asphalt Overlay as part of this project. The Contractor is fully responsible for any and all damages to existing curb and gutter, and sidewalk resulting from moling, boring or hand digging of conduit.
15. 75mm conduit shall carry 120 volt load wiring only. 50mm conduits shall carry detector, luminaire and interconnect wiring in separate conduits unless specified otherwise.
16. Contractor shall provide pedestrian push buttons and R10-4b signs incidental to the Traffic Signal Controller (Type 170) pay item. The following is an estimate of the required number of pedestrian push buttons and signs for this project.

INTERSECTION	PUSH BUTTONS/SIGNS
Yosemite Street/ C-470 EB Off Ramp	4
Yosemite Street/ C-470 WB On Ramp	8

17. Traffic signal pole foundations shall be constructed per CDOT'S latest M & S Standards. The Contractor shall field verify soil conditions ot the project site to assure that all foundation designs are adequate. The Contractor shall have the faundation design for the double most arm pole verified by o licensed structural engineer in the State of Colorado. The Contractor shall be fully responsible to verify the adequacy of all pole foundations and shall hold CDOT and Douglas County harmless for foundation failures resulting from inadequate design or improper foundation construction. The design for the double mast arm faundation shall be submitted to the Engineer and Douglas County for review.
18. Contractor shall install a utility meter housing per Public Service Company of Colorado Standords at the power source locations. All electrical service used for the operation of the traffic signal shall be wired to this installation.

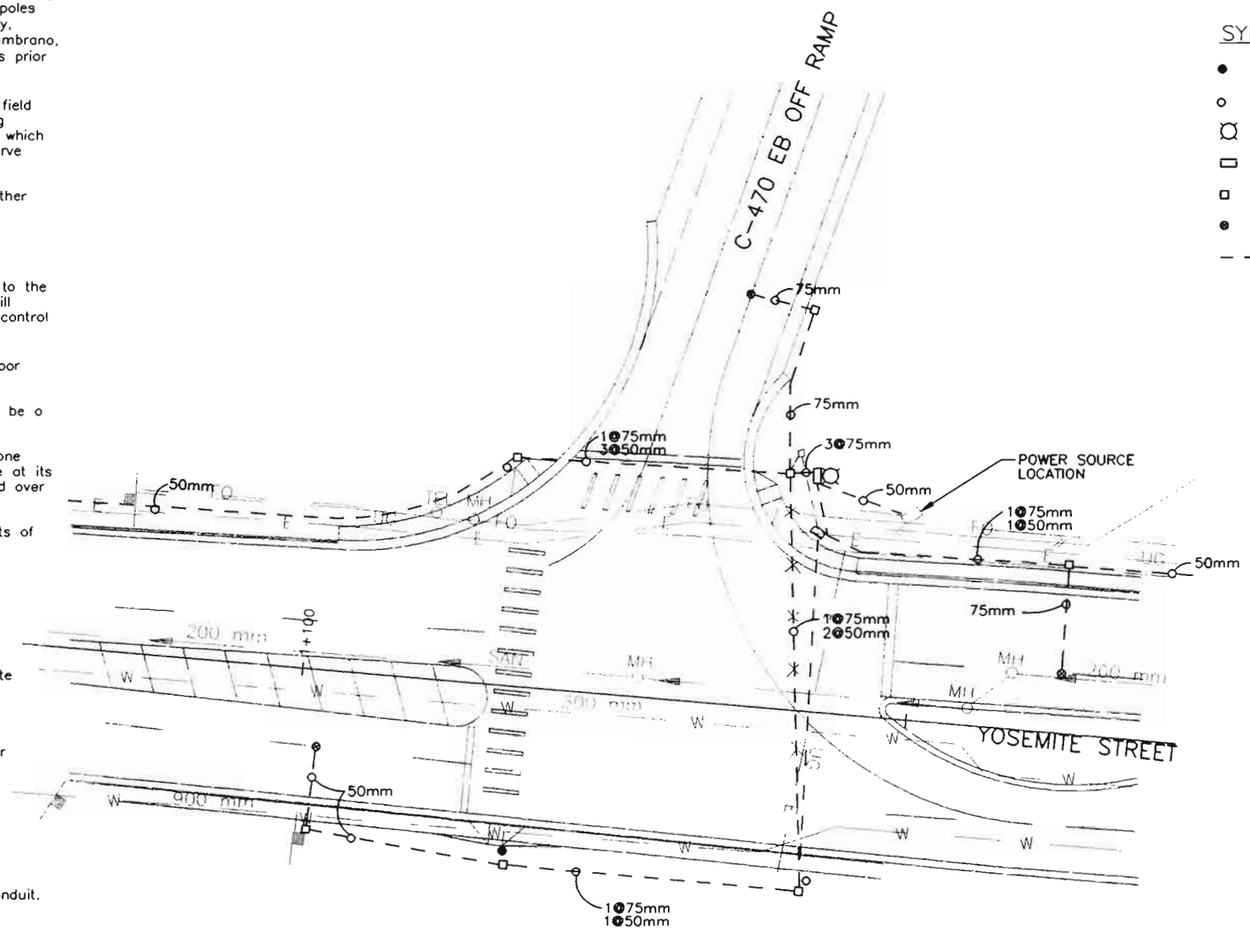

Original Scale 1:250

DOUGLAS COUNTY STANDARD SIGNAL DETAILS CHECK-OFF, FOR USE ON THIS PROJECT

SEE TS-5 THROUGH TS-11

- ☐ 1- MAST ARM & POLE
- ☒ 2- MAST ARM POLE FOOTINGS
- ☐ 3- SPAN WIRE POLE
- ☒ 4- PEDESTRIAN PUSH BUTTON POLE PEDESTAL POLE
- ☐ 5- CONTROLLER CABINET INSTALLATION
- ☒ 6- SIGNAL HEADS & MOUNTING GENERAL WIRING NOTES
- ☐ 7- PERMANENT (PRECAST) PULL BOX TEMPORARY (PLASTIC) PULL BOX
- ☒ 8- PULL BOX (SPECIAL) LOOP DETECTOR LEAD-IN
- ☒ 9- DETECTORS CONDUIT INSTALLATIONS
- ☒ 10- UNDERGROUND POWER SCHEMATIC-SIGNALS GROUND TRENCHING
- ☒ 11- UNDERGROUND POWER FEED OVERHEAD POWER FEED
- ☐ 12- SCHOOL FLASHING BEACONS- SIDE OF ROAD
- ☐ 13- SCHOOL FLASHING BEACON-OVERHEAD
- ☐ 14- WARNING/REGULATORY FLASHING BEACON TYPICAL CROSSWALK MARKING
- ☐ 15- ILLUMINATED STREET NAME SIGN
- ☐ 16- BLANK-OUT REGULATORY/WARNING SIGN

LEGEND

SYMBOL	ITEM
●	TRAFFIC SIGNAL PEDESTAL POLE
○	TRAFFIC SIGNAL POLE W/ MAST ARM
⌾	TRAFFIC SIGNAL CONTROLLER AND CABINET
▭	PULL BOX - TYPE I (800x400)
▫	PULL BOX - TYPE II (400x250)
⊛	PULL BOX - SPECIAL
- - - - -	CONDUIT - PVC SCHEDULE 80

FIBERGLASS FOUNDATION DETAIL

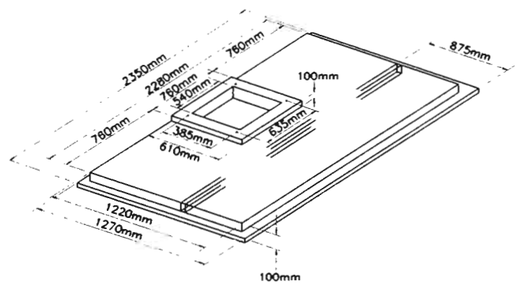

NOTE: WHOLE NUMBERS INDICATE MILLIMETERS DECIMAL NUMBERS INDICATE METERS.

FELSBURG HOLT & ULLEVIG

C-470/YOSEMITE INTERCHANGE

TRAFFIC SIGNAL PLAN
YOSEMITE ST. STA. 0+00 TO STA. 3+00

DATE	PROJECT NO.	DESIGNED BY JGF DRAWN BY SS CHECKED BY RBF	SHEET NO. 1 OF 5 SHEETS	DRAWING NO.
FEB 96	95-088			TS-1

AS CONSTRUCTED			
NO REVISIONS ☐	REVISED 12-3-96	VOID ☐	

FEDERAL RD REGION NO.	DIVISION	PROJ. NO.	SHEET NO	TOTAL SHEETS
VIII	COLORADO	CC 4701-082	139	154

REVISIONS		

SUMMARY OF TRAFFIC SIGNAL APPROXIMATE QUANTITIES –
INTERCONNECT QUANTITIES BETWEEN INTERSECTIONS SHOWN ON SI-1

ITEM NO.	DESCRIPTION	UNIT	QUANT.
613	50mm ELECTRICAL CONDUIT (PLASTIC)	m	185
613	50mm ELECTRICAL CONDUIT (PLASTIC)(INSTALL ONLY)	m	65
613	75mm ELECTRICAL CONDUIT (PLASTIC)	m	170
613	LUMINAIRE HIGH PRESSURE SODIUM (250 WATT)	EACH	2
614	PEDESTRIAN SIGNAL FACE (400)	EACH	4
614	TRAFFIC SIGNAL FACE (300-300-300)	EACH	11
614	FIRE PREEMPTION UNIT AND TIMER	EACH	1
614	LOOP DETECTOR WIRE	m	210
614	TRAFFIC SIGNAL VEHICLE DETECTOR AMPLIFIER (LOOP TYPE)	EACH	2
	(4 CHANNEL)		
614	TRAFFIC SIGNAL VEHICLE DETECTOR (MICRO TYPE)	EACH	6
614	TRAFFIC SIGNAL-LIGHT POLE STEEL (1 MAST ARM)(INSTALL ONLY)	EACH	1
614	TRAFFIC SIGNAL-LIGHT POLE STEEL (2 MAST ARMS)(INSTALL ONLY)	EACH	1
614	TRAFFIC SIGNAL PEDESTAL POLE STEEL (INSTALL ONLY)	EACH	2
614	TRAFFIC SIGNAL CONTROLLER (TYPE 170)	EACH	1

Original Scale 1:250

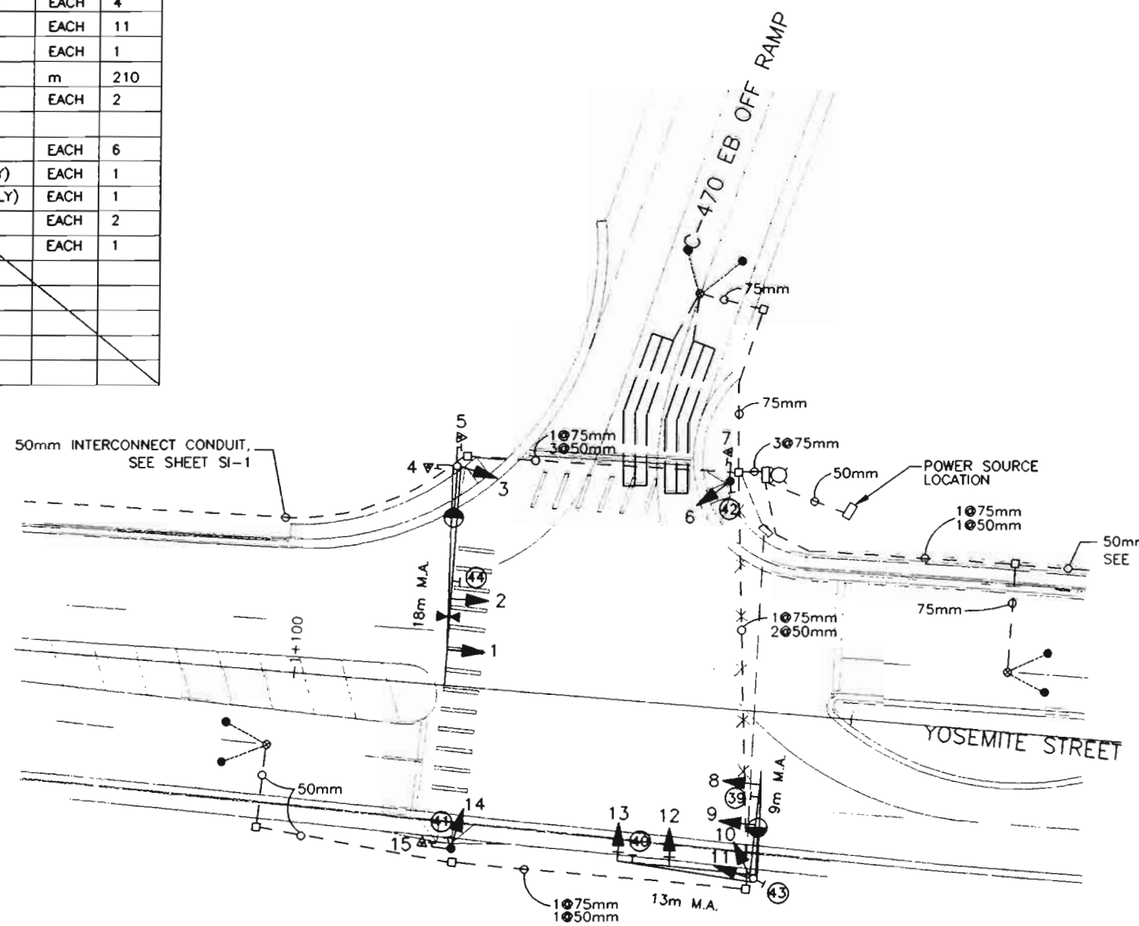

LEGEND

SYMBOL	ITEM
●	TRAFFIC SIGNAL PEDESTAL POLE
	TRAFFIC SIGNAL POLE W/ MAST ARM
	TRAFFIC SIGNAL FACE W/ BACKPLATE
	TRAFFIC SIGNAL FACE
	PEDESTRIAN SIGNAL FACE
	PEDESTRIAN PUSH BUTTON
	TRAFFIC SIGNAL CONTROLLER AND CABINET
	PULL BOX - TYPE I (800x400)
	PULL BOX - TYPE II (400x250)
	PULL BOX - SPECIAL
	CONDUIT - PVC SCHEDULE 80
	VEHICLE LOOP DETECTOR (12mx1.8m)
	MICRO LOOP DETECTOR W/SAWCUT LEAD-IN
	MAST ARM MOUNTED SIGN
	FIRE PREEMPTION UNIT AND TIMER
	PROPOSED LUMINAIRE

2015PM PEAK HOUR TRAFFIC FORECAST

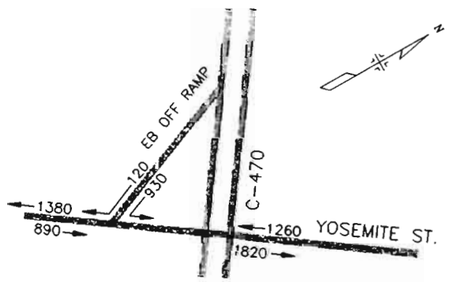

SIGNAL PHASING

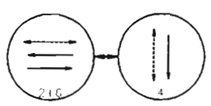

KEY
- PHASE MOVEMENT
- PERMISSIVE LEFT TURN
- PEDESTRIAN MOVEMENT

SIGNS - FOR INFORMATION ONLY

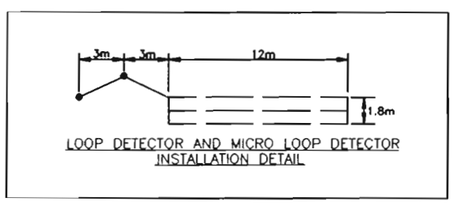

LOOP DETECTOR AND MICRO LOOP DETECTOR INSTALLATION DETAIL

SIGNAL HEADS

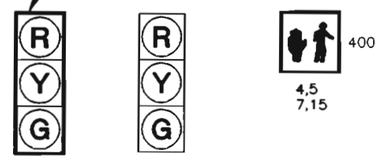

ALL VEHICLE SIGNAL HEADS SHALL BE POLYCARBONATE WITH 300mm SECTIONS AND TUNNEL VISORS.

ALL VEHICLE AND PEDESTRIAN SIGNAL HEADS SHALL BE BLACK IN COLOR.

NOTE: WHOLE NUMBERS INDICATE MILLIMETERS
DECIMAL NUMBERS INDICATE METERS.

FELSBURG HOLT & ULLEVIG

C-470/YOSEMITE INTERCHANGE

TRAFFIC SIGNAL PLAN
YOSEMITE ST. STA. 0+00 TO STA. 3+00

DATE	PROJECT NO.	DESIGNED BY JGF	DRAWN BY SS	CHECKED BY RRF	SHEET NO. 2 OF 5 SHEETS	DRAWING NO.
FEB 96	95-088					TS-2

AS CONSTRUCTED				
NO REVISIONS ☐	REVISED 12-3-96	VOID ☐		

FEDERAL RD REGION NO.	DIVISION	PROJ. NO.	SHEET NO.	TOTAL SHEETS
VIII	COLORADO	CC 4701-082	140	154

REVISIONS		

NOTES

1. Except as modified in the plans, all work shall be in accordance with "Standard Specifications for Road and Bridge Construction", 1991 and "Standards Plans", November 1992, by the Colorado Department of Transportation (CDOT).
2. Conduit, pole, detector and controller cabinet locations are approximate. Exact location shall be determined by the Engineer in the field. Traffic signal poles and mast arms shall not be installed until exact location of pole bases is field verified. Douglas County is responsible for ordering signal poles and mast arms. The Contractor shall pick up signal poles and mast arms from Douglas County at 3030 North Industrial Way, Castle Rock, Co. Contractor to contact Douglas County (Carlos Zambrano, 660-7475) a minimum of 48 hours and a maximum of 96 hours prior to starting traffic signal construction.
3. All existing utility locations are approximate. The Contractor shall field verify the exact location of all existing utilities before commencing work and agrees to be fully respansible for any and all damages which may occur by the Contractor's failure to exactly locate and preserve any and all underground utilities.
4. Poyment shall be made only for items in the poy item list. All other items shall be considered incidental to the work.
5. All signal heads shall be polycarbonate type and black in color. Traffic signal poles shall be black in color.
6. The Contractor shall submit a traffic control plan for construction to the Engineer with the permit application. A public way work permit will not be issued without an approved traffic control plan for traffic control during construction.
7. The controller cabinet shall be installed such that with the front door open a technician views both the controller and the intersection.
8. The controller shall be a Type 170 and the controller cabinet shall be a Model 336S.
9. Mast arm signal heads shall be mounted approximately level with one another, with a 5.2 to 5.8 meter clearance above pavement grade at its highest elevation. All traffic signal vehicle heads shall be centered over the approach through and left turn lanes.
10. The contractor shall provide the Engineer with at least four (4) sets of equipment specifications/descriptions and obtain approvals before ordering the equipment.
11. Upon completion of the work, the Contractor shall submit record drawings, corrected plans and any additional data required by the Engineer showing in detail all construction changes.
12. An electrical permit and subsequent inspection by Douglas County is required before Public Service Company of Colorado will execute power to the intersection. Public Service contact: Cheri Weers at 571-2505.
13. All pull boxes shall be constructed of fiberglass reinforced polymer concrete.
14. Existing curb and gutter, and sidewalk shall not be disturbed during placement of conduit. Canduit under these areas shall be placed by moling, boring or hand digging. Trenching is allowed only in dirt or grass areas, and in Yosemite St. because of Asphalt Overlay as part of this project. The Contractor is fully responsible for any and all damages to existing curb and gutter, and sidewalk resulting from moling, boring or hand digging of conduit.
15. 75mm conduit shall carry 120 volt load wiring only. 50mm conduits shall carry detector, luminaire and interconnect wiring in separate conduits unless specified otherwise.
16. Contractor shall provide pedestrian push buttons and R10-4b signs incidental to the Traffic Signal Controller (Type 170) pay item. The following is an estimate of the required number of pedestrian push buttons ond signs for this project.

INTERSECTION	PUSH BUTTONS/SIGNS
Yosemite Street/ C-470 EB Off Ramp	4
Yosemite Street/ C-470 WB On Ramp	8

17. Traffic signal pole foundations shall be constructed per CDOT'S latest M & S Standards. The Contractor shall field verify soil conditions at the project site to assure that all foundation designs are adequate. The Contractor shall have the foundation design for the double mast arm pole verified by a licensed structural engineer in the State of Colorado. The Contractor shall be fully responsible to verify the adequacy of all pole foundations and shall hold CDOT and Douglas County harmless for foundation failures resulting from inadequate design or improper foundation construction. The design for the double mast arm foundation shall be submitted to the Engineer and Douglas County for review.
18. Contractor shall install a utility meter housing per Public Service Company of Colorado Standards at the power source locations. All electrical service used for the operation of the traffic signal shall be wired to this installation.

Original Scale 1:250

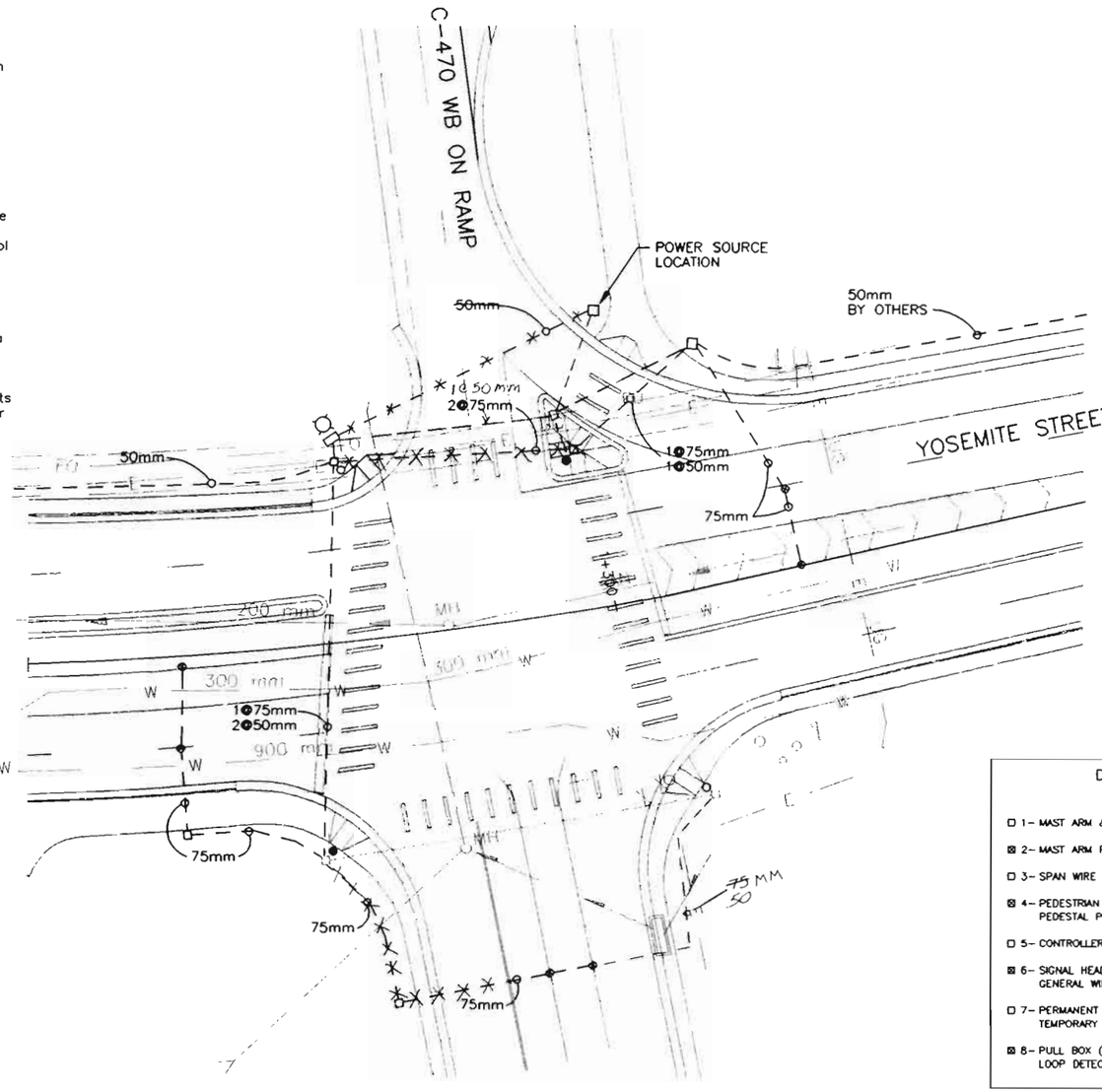

PARK MEADOWS TOWN CENTER ACCESS

LEGEND

SYMBOL	ITEM
●	TRAFFIC SIGNAL PEDESTAL POLE
○	TRAFFIC SIGNAL POLE W/ MAST ARM
⌀	TRAFFIC SIGNAL CONTROLLER AND CABINET
▭	PULL BOX - TYPE I (800x400)
▫	PULL BOX - TYPE II (400x250)
◉	PULL BOX - SPECIAL
- - - - -	CONDUIT - PVC SCHEDULE 80

FIBERGLASS FOUNDATION DETAIL

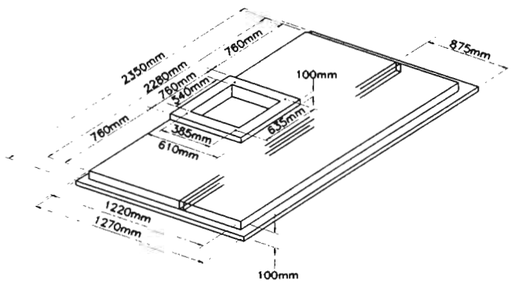

DOUGLAS COUNTY STANDARD SIGNAL DETAILS CHECK-OFF, FOR USE ON THIS PROJECT

SEE TS-5 THROUGH TS-11

- ☐ 1- MAST ARM & POLE
- ☒ 2- MAST ARM POLE FOOTINGS
- ☐ 3- SPAN WIRE POLE
- ☒ 4- PEDESTRIAN PUSH BUTTON POLE PEDESTAL POLE
- ☐ 5- CONTROLLER CABINET INSTALLATION
- ☒ 6- SIGNAL HEADS & MOUNTING GENERAL WIRING NOTES
- ☐ 7- PERMANENT (PRECAST) PULL BOX TEMPORARY (PLASTIC) PULL BOX
- ☒ 8- PULL BOX (SPECIAL) LOOP DETECTOR LEAD-IN
- ☒ 9- DETECTORS CONDUIT INSTALLATIONS
- ☒ 10- UNDERGROUND POWER SCHEMATIC-SIGNALS GROUND TRENCHING
- ☒ 11- UNDERGROUND POWER FEED OVERHEAD POWER FEED
- ☐ 12- SCHOOL FLASHING BEACONS- SIDE OF ROAD
- ☐ 13- SCHOOL FLASHING BEACON-OVERHEAD
- ☐ 14- WARNING/REGULATORY FLASHING BEACON TYPICAL CROSSWALK MARKING
- ☐ 15- ILLUMINATED STREET NAME SIGN
- ☐ 16- BLANK-OUT REGULATORY/WARNING SIGN

NOTE: WHOLE NUMBERS INDICATE MILLIMETERS
DECIMAL NUMBERS INDICATE METERS.

FELSBURG HOLT & ULLEVIG

C-470/YOSEMITE INTERCHANGE

TRAFFIC SIGNAL PLAN
YOSEMITE ST. STA. 0+00 TO STA. 3+00

DATE	PROJECT NO.	DESIGNED BY JGF	DRAWN BY SS	CHECKED BY RRF	SHEET NO. 3 OF 5 SHEETS	DRAWING NO. TS-3
FEB 96	95-088					

AS CONSTRUCTED			
NO REVISIONS ☐	REVISED 12-3-96	VOID ☐	

FEDERAL RD REGION NO.	DIVISION	PROJ. NO.	SHEET NO.	TOTAL SHEETS
VIII	COLORADO	CC 4701-082	141	154

REVISIONS		

SUMMARY OF TRAFFIC SIGNAL APPROXIMATE QUANTITIES –
INTERCONNECT QUANTITIES BETWEEN INTERSECTIONS SHOWN ON SI-1

ITEM NO.	DESCRIPTION	UNIT	QUANT.
613	50mm ELECTRICAL CONDUIT (PLASTIC)	m	105
613	50mm ELECTRICAL CONDUIT (PLASTIC)(INSTALL ONLY)	m	40
613	75mm ELECTRICAL CONDUIT (PLASTIC)	m	205
613	LUMINAIRE HIGH PRESSURE SODIUM (250 WATT)	EACH	2
614	PEDESTRIAN SIGNAL FACE (400)	EACH	8
614	TRAFFIC SIGNAL FACE (300-300-300)	EACH	10
614	TRAFFIC SIGNAL FACE (300-300-300-300-300)	EACH	4
614	FIRE PREEMPTION UNIT AND TIMER	EACH	1
614	LOOP DETECTOR WIRE	m	630
614	TRAFFIC SIGNAL VEHICLE DETECTOR AMPLIFIER (LOOP TYPE) (4 CHANNEL)	EACH	3
614	TRAFFIC SIGNAL VEHICLE DETECTOR (MICRO TYPE)	EACH	10
614	TRAFFIC SIGNAL-LIGHT POLE STEEL (1 MAST ARM)(INSTALL ONLY)	EACH	1
614	TRAFFIC SIGNAL-LIGHT POLE STEEL (2 MAST ARM)(INSTALL ONLY)	EACH	1
614	TRAFFIC SIGNAL PEDESTAL POLE STEEL (INSTALL ONLY)	EACH	2
614	TRAFFIC SIGNAL CONTROLLER (TYPE 170)	EACH	1

SIGNS - FOR INFORMATION ONLY

(45) (46) (47) (48) (49)

Original Scale 1:250

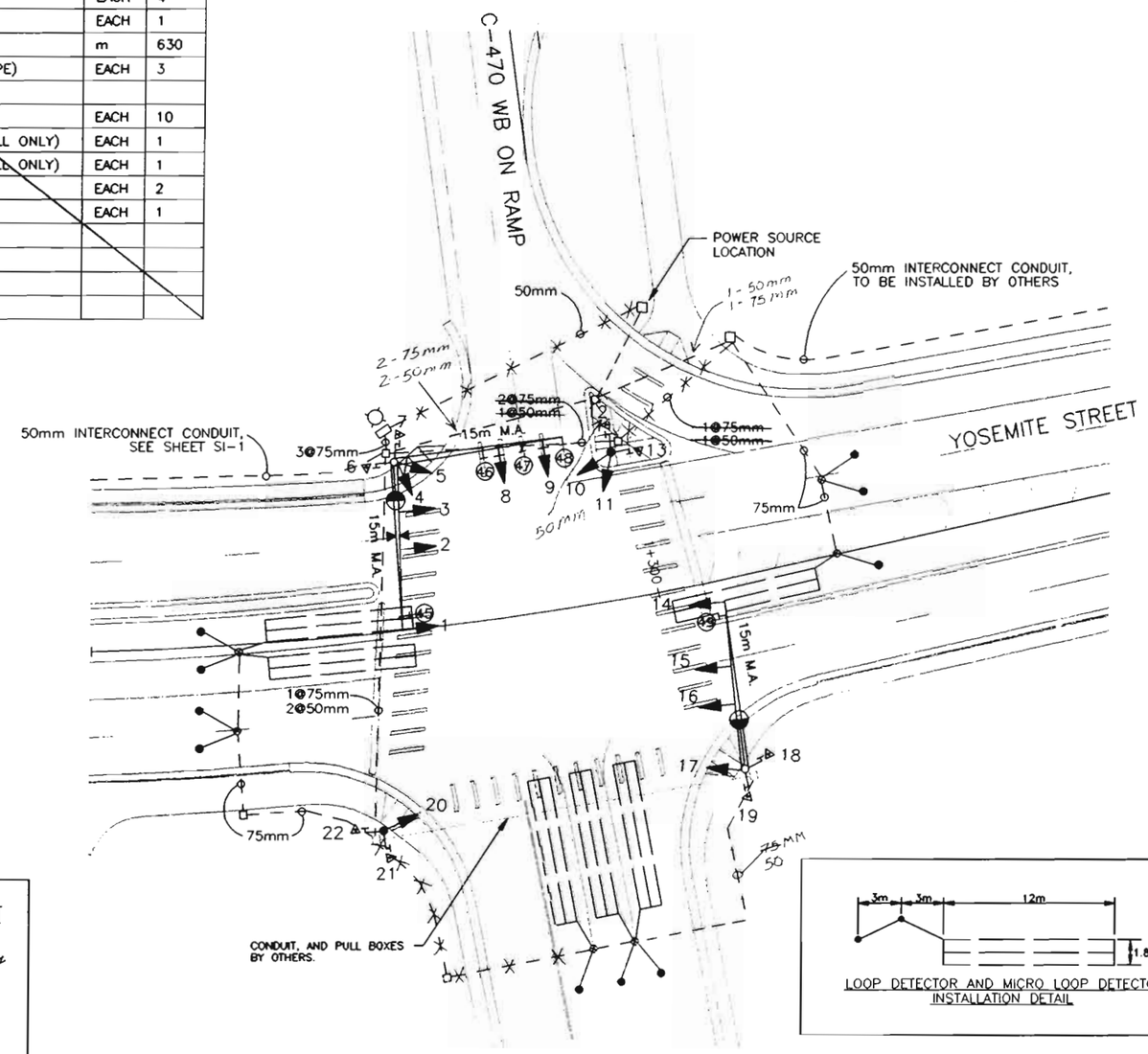

PARK MEADOWS TOWN CENTER ACCESS

SIGNAL PHASING

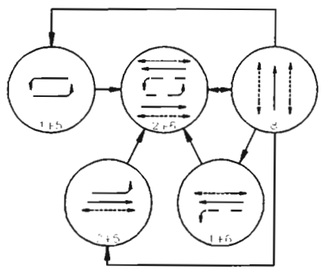

KEY
- PHASE MOVEMENT
- PERMISSIVE LEFT TURN
- PEDESTRIAN MOVEMENT

2015PM PEAK HOUR TRAFFIC FORECAST

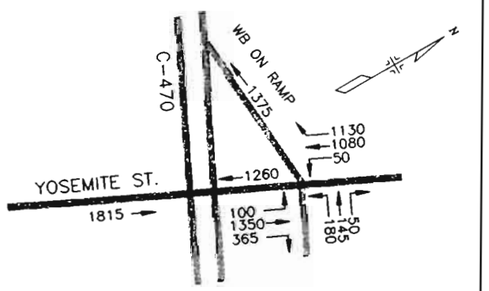

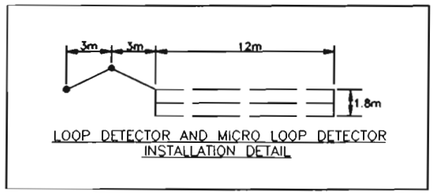

LOOP DETECTOR AND MICRO LOOP DETECTOR INSTALLATION DETAIL

LEGEND

SYMBOL	ITEM
●	TRAFFIC SIGNAL PEDESTAL POLE
⊙—	TRAFFIC SIGNAL POLE W/ MAST ARM
+▶	TRAFFIC SIGNAL FACE W/ BACKPLATE
▶	TRAFFIC SIGNAL FACE
⌐	PEDESTRIAN SIGNAL FACE
▶	PEDESTRIAN PUSH BUTTON
⌑	TRAFFIC SIGNAL CONTROLLER AND CABINET
▭	PULL BOX - TYPE I (800x400)
▫	PULL BOX - TYPE II (400x250)
⊗	PULL BOX - SPECIAL
- - - -	CONDUIT - PVC SCHEDULE 80
≡	VEHICLE LOOP DETECTOR (12mx1.8m)
—●	MICRO LOOP DETECTOR-W/SAWCUT LEAD-IN
⊣	MAST ARM MOUNTED SIGN
⋈	FIRE PREEMPTION UNIT AND TIMER
—◐	PROPOSED LUMINAIRE
. . . .	BY OTHERS

SIGNAL HEADS

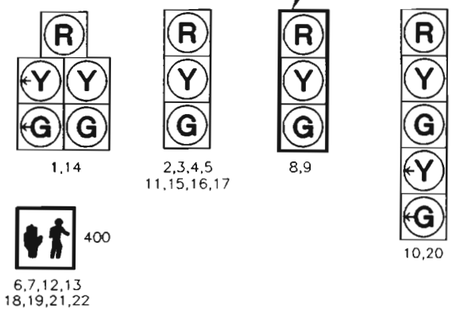

1,14 — 2,3,4,5 11,15,16,17 — 8,9 — 10,20

6,7,12,13 18,19,21,22

ALL VEHICLE SIGNAL HEADS SHALL BE POLYCARBONATE WITH 300mm SECTIONS AND TUNNEL VISORS.

ALL VEHICLE AND PEDESTRIAN SIGNAL HEADS SHALL BE BLACK IN COLOR.

NOTE: WHOLE NUMBERS INDICATE MILLIMETERS
DECIMAL NUMBERS INDICATE METERS.

FELSBURG HOLT & ULLEVIG

C-470/YOSEMITE INTERCHANGE

TRAFFIC SIGNAL PLAN
YOSEMITE ST. STA. 0+00 TO STA. 3+00

DATE	PROJECT NO.	DESIGNED BY JGF	DRAWN BY SS	CHECKED BY RRF	SHEET NO. 4 OF 5 SHEETS	DRAWING NO.
FEB 96	95-088					TS-4

AS CONSTRUCTED			
NO REVISIONS ☐	REVISED 12-3-96	VOID ☐	

FEDERAL RD REGION NO	DIVISION	PROJ. NO.	SHEET NO.	TOTAL SHEETS
VIII	COLORADO	CC 4701-082	142	154

REVISIONS		

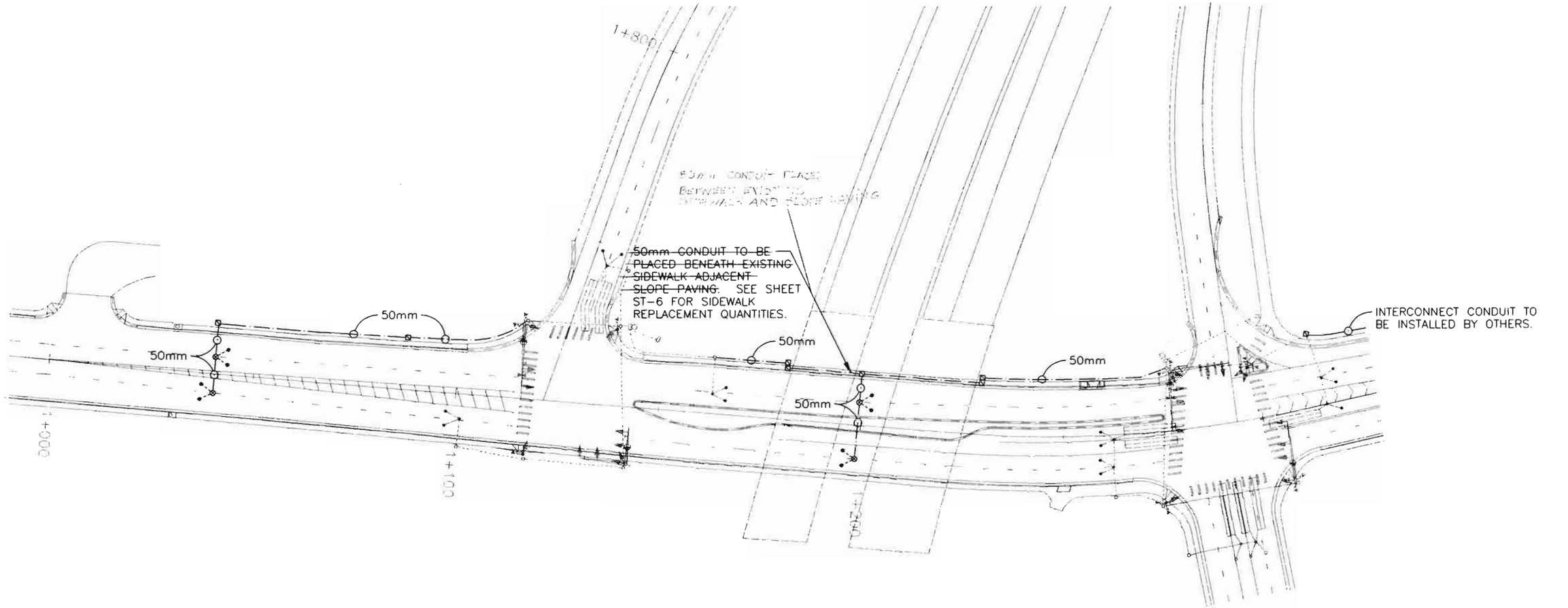

LEGEND

SYMBOL	ITEM
⊠	PULL BOX – TYPE III (275mm X 275mm)
⊗	PULL BOX – SPECIAL
—·—	CONDUIT – PVC SCHEDULE 80
---●	MICRO LOOP DETECTOR W/ SAWCUT LEAD-IN

SUMMARY OF TRAFFIC SIGNAL APPROXIMATE QUANTITIES

CONTRACT ITEM NO.	CONTRACT ITEM	UNIT	TOTAL
613	~~50mm~~ ELECTRICAL CONDUIT (PLASTIC)	M	250
614	TRAFFIC SIGNAL VEHICLE DETECTOR (MICRO TYPE)	EACH	8

Original Scale 1:500

FELSBURG HOLT & ULLEVIG

C-470/YOSEMITE INTERCHANGE

TRAFFIC SIGNAL INTERCONNECT

DATE	PROJECT NO.	DESIGNED BY JF	DRAWN BY SS	CHECKED BY DB	SHEET NO. 1 OF 1 SHEETS	DRAWING NO. SI-1
FEB 96	95-088					

FEDERAL RTE REGION NO.	DIVISION	DRGW NO.	SHEET NO.	TOTAL SHEETS
STATE	TRAFFIC	EC 4301-085	143	154

TYPICAL TRAFFIC SIGNAL POLE FOOTING

5/8"x12' COPPER WELD GROUNDING ROD. LOCATE IN PULL BOX AND BOND DIRECTLY TO POLE, OR ANGLE THROUGH FOUNDATION

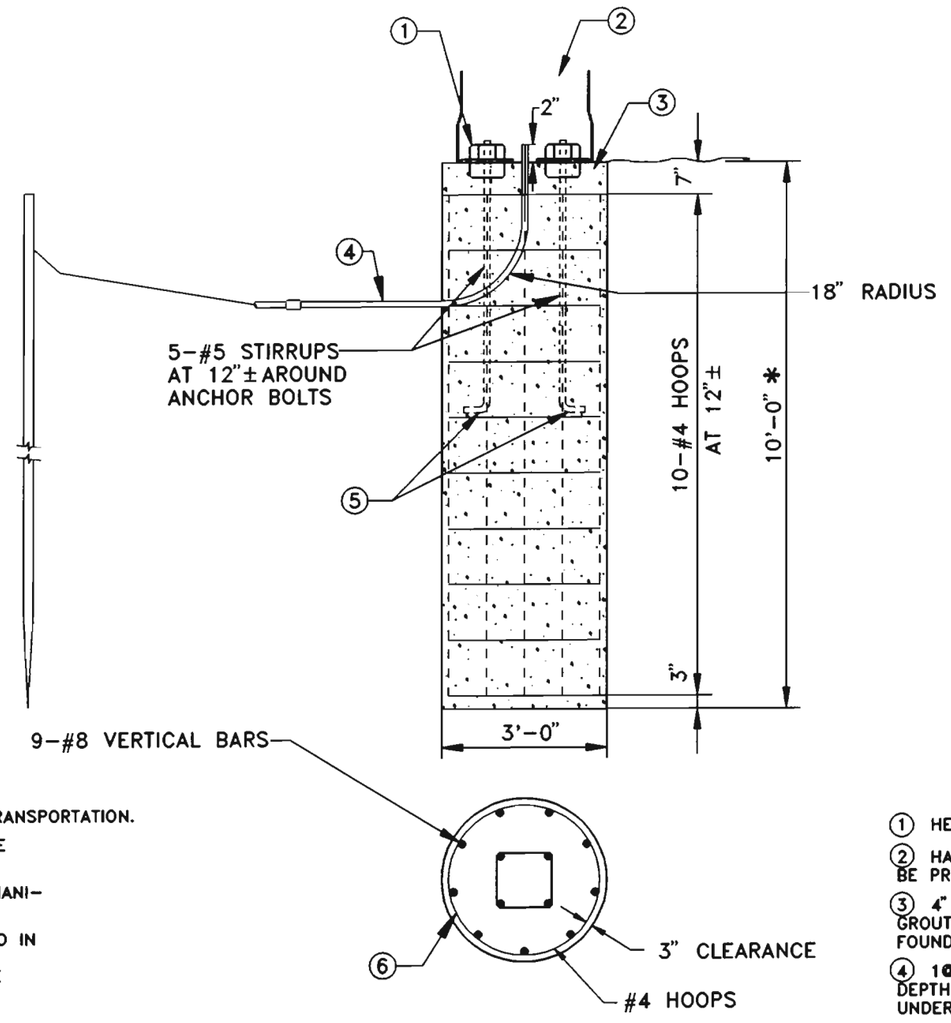

* FOR 55 TO 65 FOOT MAST ARM LENGTHS, INCREASE DEPTH TO 12'-0" AND ADD 2 #4 HOOPS. THESE DESIGNS REQUIRE THAT THE FOOTING BE FOUNDED IN COMPACT SAND, CLAY OR SANDY CLAY, AND BE LOCATED ABOVE THE WATER TABLE. IF, BY VISUAL INSPECTION OF THE HOLE OTHER MATERIAL IS PRESENT SUCH AS BEDROCK OR SOFT CLAY, A SOIL INVESTIGATION MAY BE NECESSARY TO DETERMINE CONDITIONS AND TO MODIFY THE DESIGN ACCORDINGLY.

GENERAL NOTES

1. CONCRETE $F_C{}^1$ = CLASS B, PER THE COLORADO DEPT. OF TRANSPORTATION. REINFORCING STEEL: PER AASHTO M31 SPECIFICATION, GRADE 60 FOR #9, #5 & #4 BARS.
2. SHAFT FOR CONCRETE FOUNDATION TO BE DRILLED BY MECHANICAL AUGER.
3. FOUNDATION DESIGN REQUIRES THAT THE SHAFT BE FOUNDED IN COMPACT SAND, CLAY, OR SANDY CLAY. IF BY VISUAL INSPECTION OF THE HOLE OTHER MATERIAL IS PRESENT, THE FOUNDATION DESIGN SHALL BE MODIFIED AS DETERMINED BY THE ENGINEER.
4. SHOULD ROCK BE ENCOUNTERED, THE SHAFT SHOULD EXTEND 6 FT. MINIMUM INTO ROCK. THE ALLOWABLE SAFE LATERAL BEARING CAPACITY OF ROCK TO BE 4,300 LBS./SQ. FT. THE SOIL (INCLUDING ROCK) SURROUNDING THE SHAFT SHOULD BE INVESTIGATED TO ENSURE IT WILL RESIST THE TORSIONAL MOMENT OF 93,435 FT. LBS.
5. CONCRETE SHALL BE POURED IN LIFTS NOT EXCEEDING 3 FEET IN DEPTH. AT THE POURING OF EACH LIFT, CONCRETE SHALL BE MECHANICALLY VIBRATED TO REMOVE AIR POCKETS.
6. FOUNDATIONS SHOULD BE POURED 10 TO 20 DAYS IN ADVANCE OF POLE INSTALLATION. SEE PROJECT SPECIAL PROVISIONS FOR SPECIFIC DIRECTIONS.
7. WHEN AMBIENT TEMPERATURE IS BELOW 40° F, POURED FOUNDATIONS SHALL BE COVERED WITH BLANKETS AND/OR STRAW PER DIRECTION OF THE ENGINEER.

FOOTING NOTES

1. HEX NUTS
2. HAND HOLE SHALL BE PROVIDED
3. 4" MIN. NON-SHRINKABLE GROUT OVER ROUGH FOUNDATION
4. 1@3" & 1@2" CONDUIT (24" MIN. DEPTH, 30" MIN. DEPTH UNDER ROADWAY)
5. INSTALL ANCHOR BOLTS (FURNISHED WITH POLE) PER STANDARD TEMPLATE. SEE MAST ARM AND POLE DETAIL SHEET.
6. MINIMUM OVERLAP OF 12".

TS-5

DOUGLAS COUNTY
STANDARD SIGNAL DETAILS

MAST ARM POLE FOOTINGS

ORIGINAL 6-93 2/16	DATE:	DESIGNED BY:	JOB NO.
	SCALE:	DRAWN BY:	SHEET NO. OF
REVISION DATE			

D:\MAF.dwg, 1"=1', 08/16/93 at 08:40

FEDERAL RD REGION NO.	DIVISION	PROJ. NO.	SHEET NO.	TOTAL SHEETS
VIII	COLORADO		144	154

FINISH REQUIREMENTS

ALL PEDESTRIAN PUSH BUTTONS AND PEDESTAL POLES SHALL BE FACTORY PAINTED WITH A RUST INHIBITIVE EPOXY PRIMER (MIN. DRY FILM THICKNESS OF 2.0 MILS) AND A COMPATIBLE POLYURETHANE TOP COAT LIQUID COATING (MIN. DRY FILM THICKNESS OF 2.0 MILS). ALL ACCESSIBLE INTERIOR SURFACES SHALL BE COATED WITH A RUST INHIBITIVE PRIMER (MIN. DRY FILM THICKNESS OF 1.0 MILS). ALL SURFACES TO BE TREATED SHALL BE ABRASIVE BLASTED TO A NEAR WHITE FINISH.

THE TOP COAT SHALL BE AMERON AMERSHIELD, TNEMEC ENDURA-SHIELD III, NICKLAD 105, OR APPROVED SUBSTITUTE, AND SHALL BE SEMI-GLOSS BLACK IN COLOR. FOLLOWING INSTALLATION OF POLES, CONTRACTOR SHALL USE FACTORY SUPPLIED PAINT TO TOUCH UP NICKS AND ABRASIONS.

R10-4b
9"x12"

SIGN SHALL BE LABEL (STICK-ON) TYPE

TYPICAL PEDESTRIAN PUSH-BUTTON SIGN

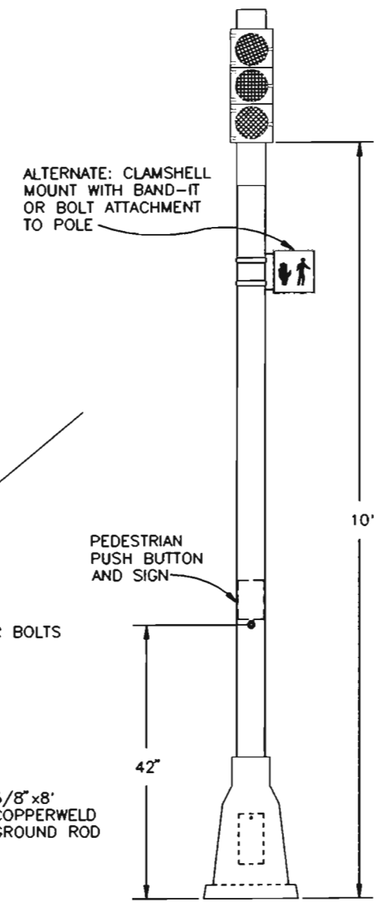

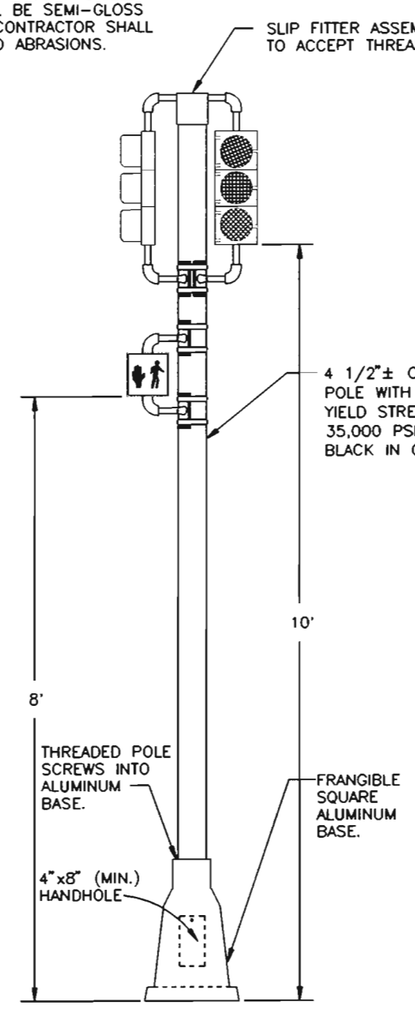

FOOTING NOTES

1. ANCHOR BOLTS (FURNISHED WITH POLE) PER MANUFACTURER'S TEMPLATE.
2. THESE DESIGNS REQUIRE THAT THE FOOTING BE FOUNDED IN COMPACT SAND, CLAY OR SANDY CLAY, AND BE LOCATED ABOVE THE WATER TABLE. IF, BY VISUAL INSPECTION OF THE HOLE OTHER MATERIAL IS PRESENT, THE FOUNDATION DESIGN MAY NEED TO BE MODIFIED.
3. 5/8"x8' COPPERWELD GROUND ROD THROUGH FOUNDATION INTO GROUND, OR DRIVEN IN ADJACENT PULL BOX AND BONDED TO POLE WITH UNDERGROUND STRAPPING.
4. HANDHOLE SHALL BE PROVIDED.

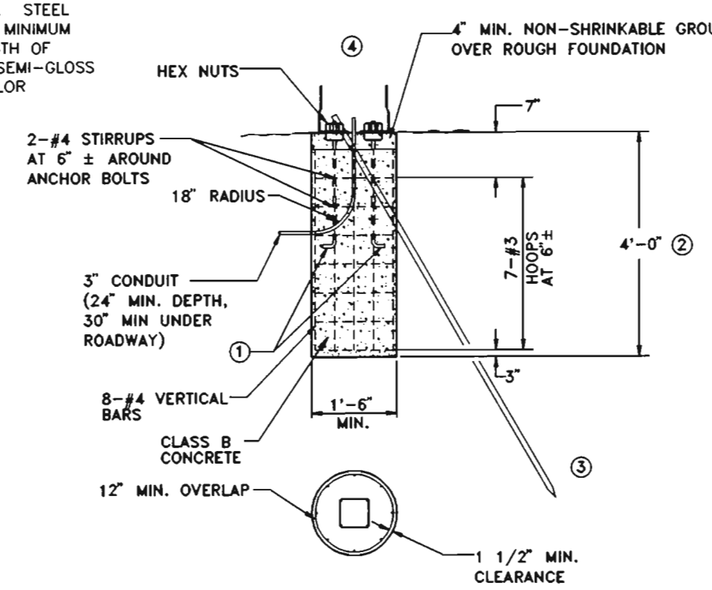

TYPICAL PEDESTAL POLE FOOTING

(CAST IN PLACE)

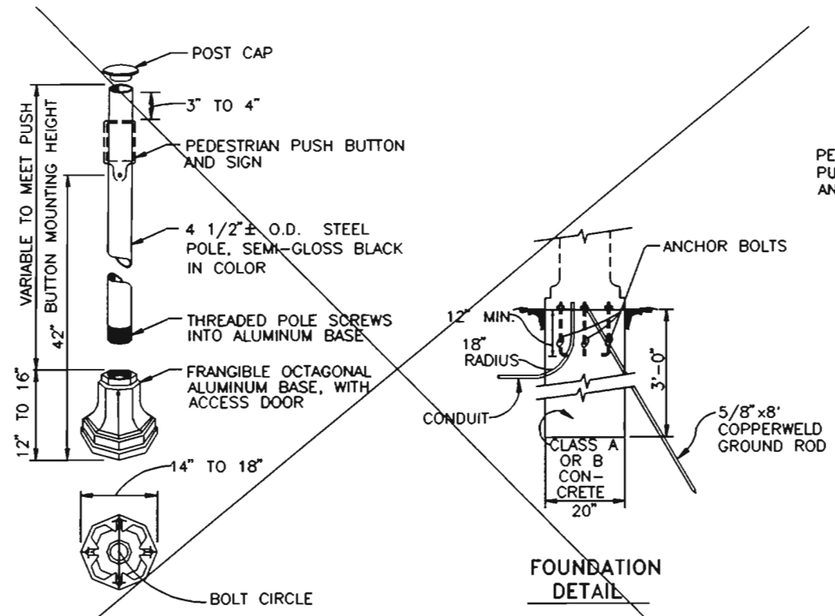

PEDESTRIAN PUSH BUTTON POLE

TYPICAL PEDESTAL POLE DETAIL

TS-6

DOUGLAS COUNTY
STANDARD SIGNAL DETAILS

PEDESTRIAN PUSH BUTTON POLE
PEDESTAL POLE

ORIGINAL 6-93 4/16	DATE:	DESIGNED BY:	JOB NO.
	SCALE:	DRAWN BY:	SHEET NO. OF
REVISION DATE			

D:\PPBPPLUS.dwg, 1"=1', 10/04/93 at 01:46

FEDERAL RD REGION NO	DIVISION	PROJ NO	SHEET NO	TOTAL SHEETS
VIII	COLORADO	CO 470-1(182)	145	154

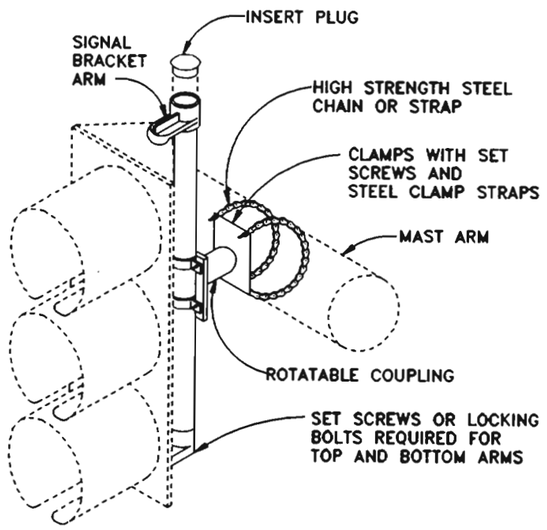

DETAIL OF MAST ARM MOUNTING FOR IN-LINE SIGNAL HEAD (3-SECTION OR 5-SECTION)

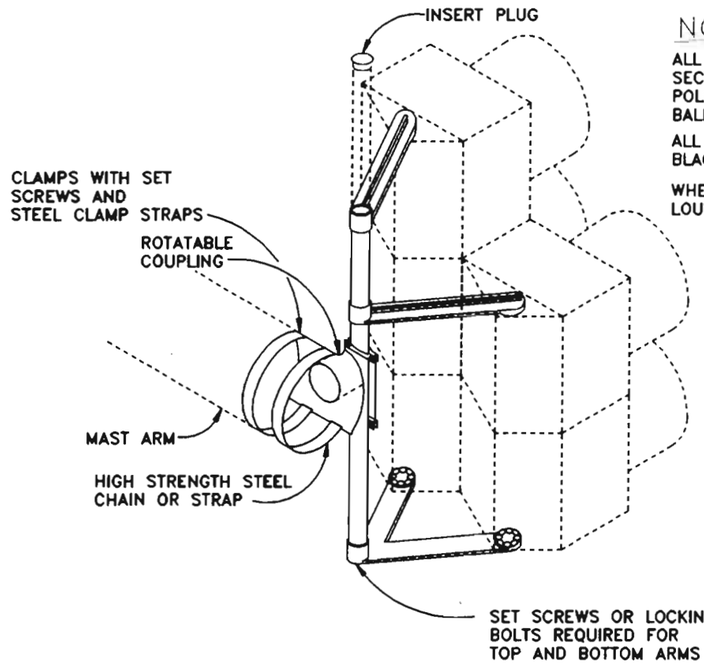

DETAIL OF MAST ARM MOUNTING FOR SIDE-BY-SIDE SIGNAL HEAD (5-SECTION)

NOTES

ALL VEHICLE SIGNAL HEADS SHALL BE POLYCARBONATE WITH 12" SECTIONS AND TUNNEL VISORS. 8" SECTIONS MAY BE USED FOR POLE MOUNTED HEADS AND FOR OVERHEAD YELLOW AND GREEN BALL SECTIONS, WITH PRIOR APPROVAL OF THE ENGINEER.

ALL VEHICLE AND PEDESTRIAN SIGNAL HEADS SHALL BE BLACK IN COLOR.

WHERE INCLUDED ON PLANS, BACKPLATES SHALL BE THE LOUVERED TYPE

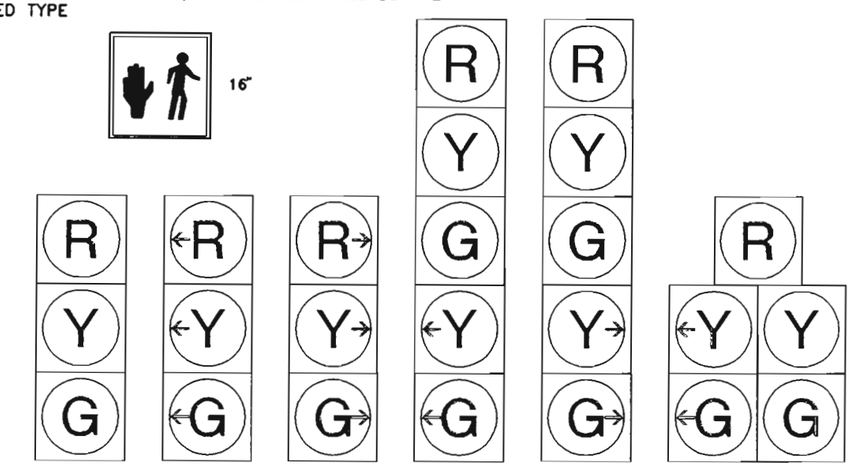

TYPICAL PEDESTRIAN AND VEHICLE SIGNAL HEADS

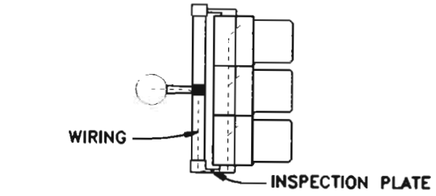

WIRING DIAGRAM

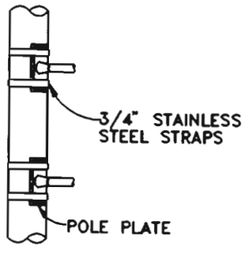

TYPICAL SIDE OF POLE SIGNAL MOUNTING

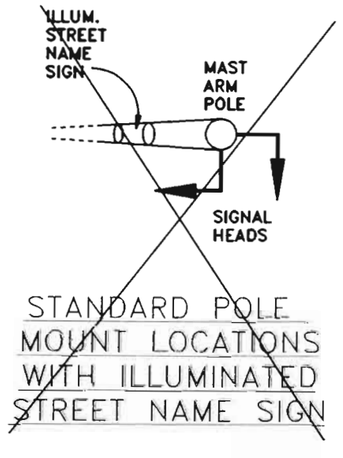

STANDARD POLE MOUNT LOCATIONS WITH ILLUMINATED STREET NAME SIGN

MOUNTING NOTES

1. PIPE COUPLINGS FOR SIGNAL BRACKETS SHALL BE EITHER 1-1/2 OR 2 INCH DEPENDING UPON THE SIGNAL HEAD TO BE INSTALLED. SIGNAL BRACKETS SHALL BE FURNISHED BY THE MANUFACTURER OF THE SIGNAL HEADS.
2. UNLESS OTHERWISE SPECIFIED, ALL TRAFFIC SIGNALS MOUNTED ABOVE THE ROADWAY SHALL BE APPROXIMATELY LEVEL WITH ONE ANOTHER AND HAVE A HEIGHT OF 17' TO 19' ABOVE THE PAVEMENT GRADE AT THE ROADWAY CENTER, ALL SIDE-OF-POLE MOUNTED TRAFFIC SIGNALS SHALL HAVE A HEIGHT OF 10' ABOVE GROUND LINE AND PEDESTRIAN SIGNALS SHALL HAVE A HEIGHT OF 8' ABOVE GROUND LINE AS MEASURED TO THE BOTTOM OF THE SIGNAL HEAD HOUSING OR BRACKET.
3. MAST ARM MOUNTED SIGNAL HEADS SHALL USE ASTRO-TYPE MOUNTING BRACKETS. ALL SIGNAL HEADS SHALL BE MOUNTED IN SUCH A MANNER AS TO BE EASILY REMOVED FROM THERE SUPPORTING STRUCTURE.
4. GASKET SEALING COMPOUND SHALL BE USED IN ADDITION TO ANY LEAD WASHERS REQUIRED FOR CREATING A WATER-TIGHT CONNECTION BETWEEN THE SIGNAL HEAD AND MOUNTING BRACKET.
5. SIGNAL HEADS SHALL BE SECURELY AFFIXED BY USE OF A SERRATED COUPLING OR OTHER ACCESSORIES RECOMMENDED BY THE SIGNAL MANUFACTURER.
6. WIRING FROM INSIDE MAST ARM THROUGH A 1" FIELD DRILLED HOLE IN ARM SHALL BE BROUGHT THROUGH THE MOUNTING SUPPORT TUBE AND LOWER ARM (AS SHOWN). FIELD DRILLED HOLES SHALL HAVE RUBBER GROMMETS INSTALLED.

GENERAL WIRING NOTES

1. TRAFFIC SIGNAL CONDUIT SHALL NOT CARRY WIRING OF OTHER UTILITIES.
2. EXCEPT FOR LOOP DETECTOR LEADS, ALL SPLICES SHALL BE IN HANDHOLES AT POLE BASES AND NOT IN PULL BOXES.
3. LOOP DETECTOR LEADS SHALL BE SPLICED IN PULL BOX AT THE SIDE OF THE ROAD, AND NOT IN WATER VALVE PULL BOXES.
4. PEDESTRIAN AND VEHICLE SIGNAL HEADS SHALL BE INDIVIDUALLY WIRED FROM THE POLE BASE TO THE SIGNAL HEAD.
5. CONTRACTOR SHALL PROVIDE 2 WIRING DIAGRAMS OF THE SIGNAL INSTALLATION TO THE COUNTY.
6. UNLESS ALLOWED BY THE ENGINEER, WIRE SHALL NOT OCCUPY MORE THAN 40% OF THE INSIDE AREA OF CONDUIT.

SIGNAL HEAD MOUNTING

TS-7

DOUGLAS COUNTY
STANDARD SIGNAL DETAILS

SIGNAL HEADS & MOUNTING
GENERAL WIRING NOTES

ORIGINAL 6-93 6/16	DATE:	DESIGNED BY:	JOB NO.
	SCALE:	DRAWN BY:	SHEET NO. OF
REVISION DATE			

D:SIGHD.dwg, 1"=1', 08/08/93 at 15:37

FEDERAL ROUTE REGION NO.	DIVISION	PROJ. NO.	SHEET NO.	TOTAL SHEETS
VIII	Colorado	CC 4781-088	146	154

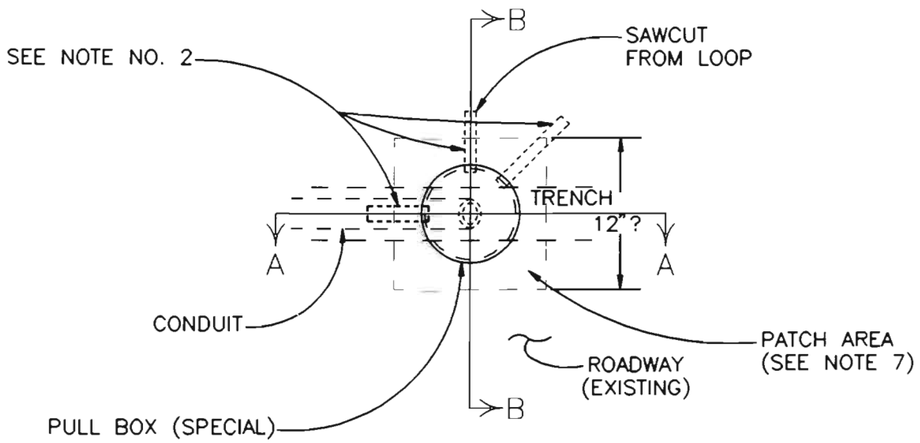

TOP VIEW

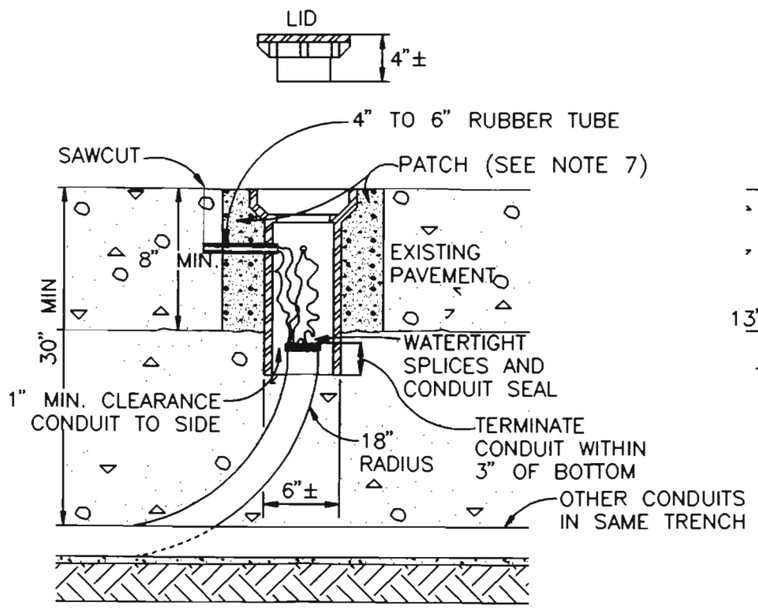

SECTION A–A

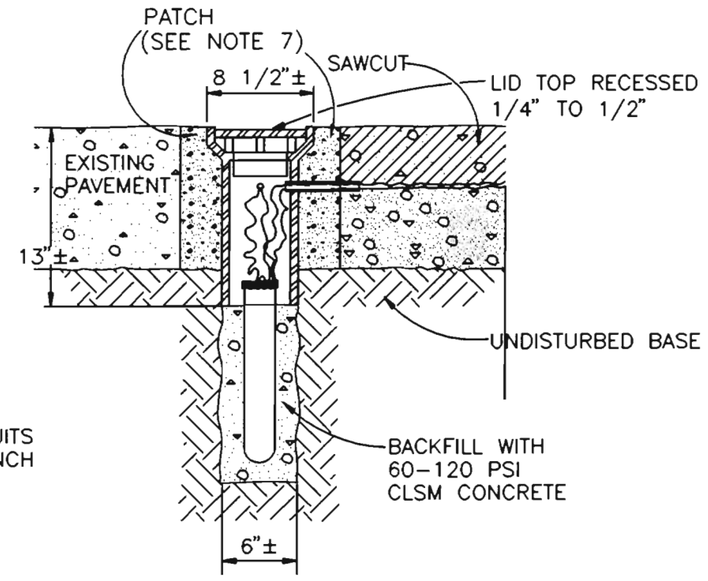

SECTION B–B

GENERAL NOTES

1. PULL BOX (SPECIAL) SHALL BE A WATER VALVE STEM TYPE PULL BOX MADE OF CAST IRON OR STEEL. THE PULL BOX SHALL HAVE CAPABILITY OF ACCEPTING RISER RINGS FOR FUTURE OVERLAYS. THE LID SHALL HAVE THE WORD "TRAFFIC" PRINTED ON IT.
2. PULL BOXES SHALL HAVE 3/4" TO 1" DIAMETER HOLES DRILLED OR TORCHED 3" FROM TOP TO ACCEPT A 4" TO 6" RUBBER TUBE (3/4" GARDEN HOSE). THE NUMBER OF HOLES SHALL BE AS PER PLANS OR AS DIRECTED BY THE ENGINEER.
3. CARE SHALL BE TAKEN DURING BACKFILL COMPACTION TO PREVENT COLLAPSE OF THE TUBES.
4. 2' MINIMUM SLACK OF LOOP WIRES IS TO BE PROVIDED SO THAT ALL TESTING CAN BE DONE OUTSIDE OF THE PULL BOX. SPLICE DETECTOR LEADS IN SIDE–OF–ROAD PULL BOX, NOT IN PULL BOX SPECIAL.
5. PULL BOX IS TO BE LOCATED IN AN AREA OF THE STREET NOT HEAVILY TRAVELED. FOR EDGE–OF–ROAD LOCATIONS, MAINTAIN A MINIMUM OF 12" FROM CONCRETE GUTTER PAN.
6. ALL WORK LISTED ABOVE FOR INSTALLATION OF PULL BOXES SHALL NOT BE PAID FOR SEPARATELY, BUT SHALL BE INCLUDED IN THE PRICE OF THE CONDUIT.
7. PAVEMENT HOLE FOR PULL BOX SHALL BE EITHER CORE DRILLED TO FULL DEPTH, OR SAW CUT TO FULL DEPTH IN 12"x12" SQUARE. FOR CORE DRILLING, GROUT PULL BOX IN PLACE. FOR SAW CUT, BACKFILL CUT OUT BY MATCHING EXISTING PAVEMENT MATERIAL.

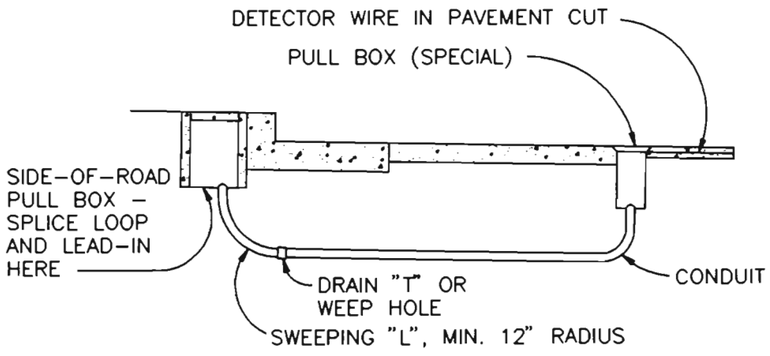

LOOP DETECTOR LEAD–IN

PULL BOX (SPECIAL)

TS–8

DOUGLAS COUNTY
STANDARD SIGNAL DETAILS

PULL BOX (SPECIAL)
LOOP DETECTOR LEAD–IN

ORIGINAL 6–93 8/16	DATE:	DESIGNED BY:	JOB NO.
	SCALE:	DRAWN BY:	SHEET NO. OF
REVISION DATE			

D:\PLB_SPCL.dwg, 1"=1', 08/10/93 at 07:27

FEDERAL AID PROJECT NO.	DIVISION	PROJECT NO.	SHEET NO.	TOTAL SHEETS
VIII	COLORADO	CO 470-082	147	154

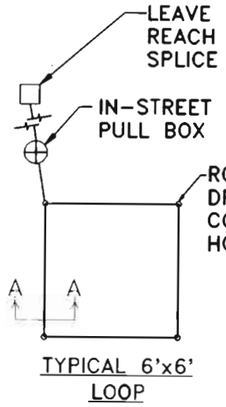

TYPICAL 6'x6' LOOP

SIZE OF LOOP	NO. OF TURNS
6'x6'	4
6'x8' TO 6'x20'	3
6'x22' TO 6'x40'+	2

NO. OF TURNS MAY BE ADJUSTED BY ENGINEER IN FIELD. WIRING CONNECTIONS TO BE FIELD DETERMINED.

LOOP TURNS

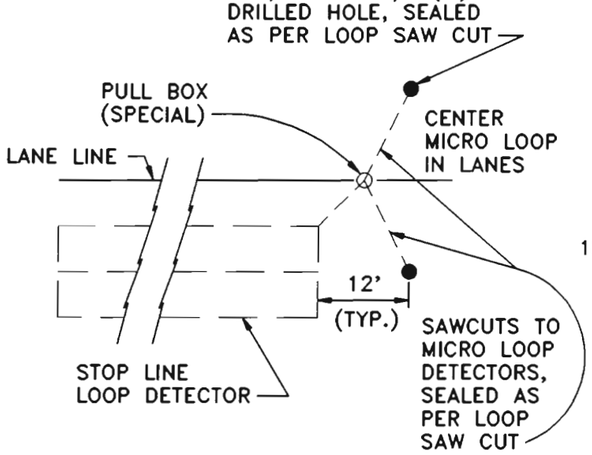

MICRO LOOP DETECTOR

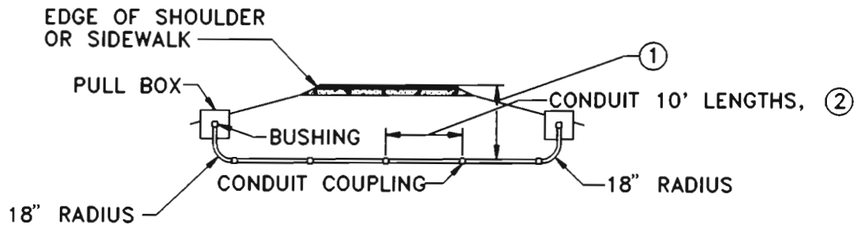

CONDUIT PLACEMENT UNDER PAVEMENT OR SIDEWALK

NOTES

1. MINIMUM CONDUIT DEPTH: UNDER PAVEMENT 30", UNDER SIDEWALK 24"
2. ALL PVC CONDUIT SHALL BE SCHEDULE 80

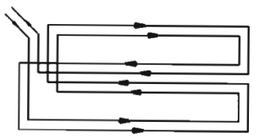

QUADRAPOLE WIRING

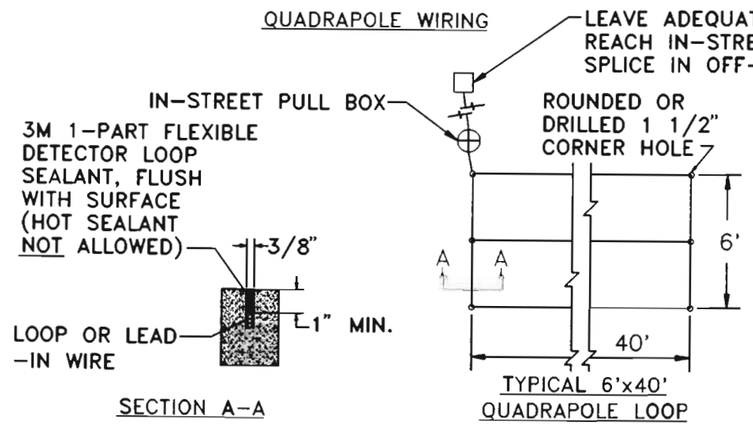

SECTION A-A

TYPICAL 6'x40' QUADRAPOLE LOOP

LOOP SAW CUT AND INSTALLATION

NOTES

1. ALL DETECTOR LOOPS SHALL BE #14 AWG THHN WIRE ENCASED IN PVC OR POLYETHYLENE TUBING.
2. IMMEDIATELY BEFORE LAYING THE LOOP CABLE, THOROUGHLY CLEAN AND DRY SAW CUT WITH HIGH PRESSURE OIL-FREE COMPRESSED AIR.
3. LOOP WIRE IN ADJACENT LOOPS SHALL BE LAID UNIFORMLY IN EITHER A CLOCKWISE OR COUNTER-CLOCKWISE DIRECTION AND THE LOOP TAGGED TO INDICATE THE DIRECTION.
4. USE A BLUNT, NON-METALLIC INSTRUMENT TO PUSH WIRE INTO SLOT. DO NOT COIL LEADS.
5. LOOP WIRE SHALL BE CONTINUOUS (NO SPLICES) FROM THE PULL BOX. SPLICES IN PULL BOX SHALL BE WATERPROOFED WITH SPLICE KIT.
6. CONTINUITY TEST FOR EACH LOOP SHALL BE CONDUCTED 1) BEFORE ANY LOOP SEALER IS INSTALLED AND 2) AFTER LOOP SEALER IS INSTALLED AND LEAD-IN CABLE IS SPLICED AND TRAINED TO THE CONTROLLER. "RESISTANCE-TO-GROUND" AND "INDUCTANCE" SHALL BE MEASURED AND RECORDED FOR EACH TEST.
7. DETECTOR WIRE ACROSS BRIDGE JOINTS SHALL BE ENCASED IN A 12" SECTION OF 3/4" PVC PIPE THAT SPANS THE JOINT AREA.

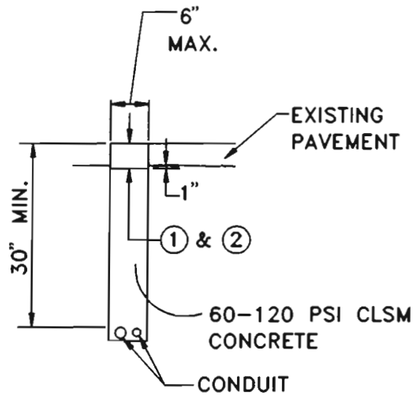

CONDUIT TRENCH DETAIL- WITHOUT PAVEMENT FABRIC

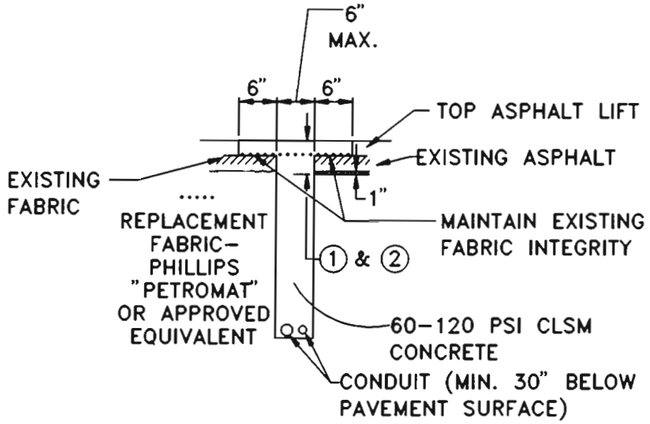

CONDUIT TRENCH DETAIL- WITH PAVEMENT FABRIC

NOTES

1. HOT BITUMINOUS PAVEMENT (PATCHING) OR PORTLAND CEMENT CONCRETE PATCH, FULL DEPTH PLUS 1" (4" MIN). MATCH EXISTING PAVEMENT TYPE.
2. FOR ASPHALT PATCH, 48 HOUR NOTICE TO THE ENGINEER REQUIRED PRIOR TO INSPECTION

TS-9

DOUGLAS COUNTY
STANDARD SIGNAL DETAILS

DETECTORS
CONDUIT INSTALLATIONS

ORIGINAL 6-93 9/16	DATE:	DESIGNED BY:	JOB NO.
	SCALE:	DRAWN BY:	SHEET NO. OF
REVISION DATE			

D:\CONDPLUS.dwg, 1"=1', 08/16/93 at 07:54

FEDERAL AID REGION NO.	DIVISION	PROJ. NO.	SHEET NO.	TOTAL SHEETS
VIII	ENGINEERING	CC 4701-082	148	154

UNDERGROUND POWER SOURCE SCHEMATIC FOR SIGNALS WITH LUMINAIRES

(NO SCALE)

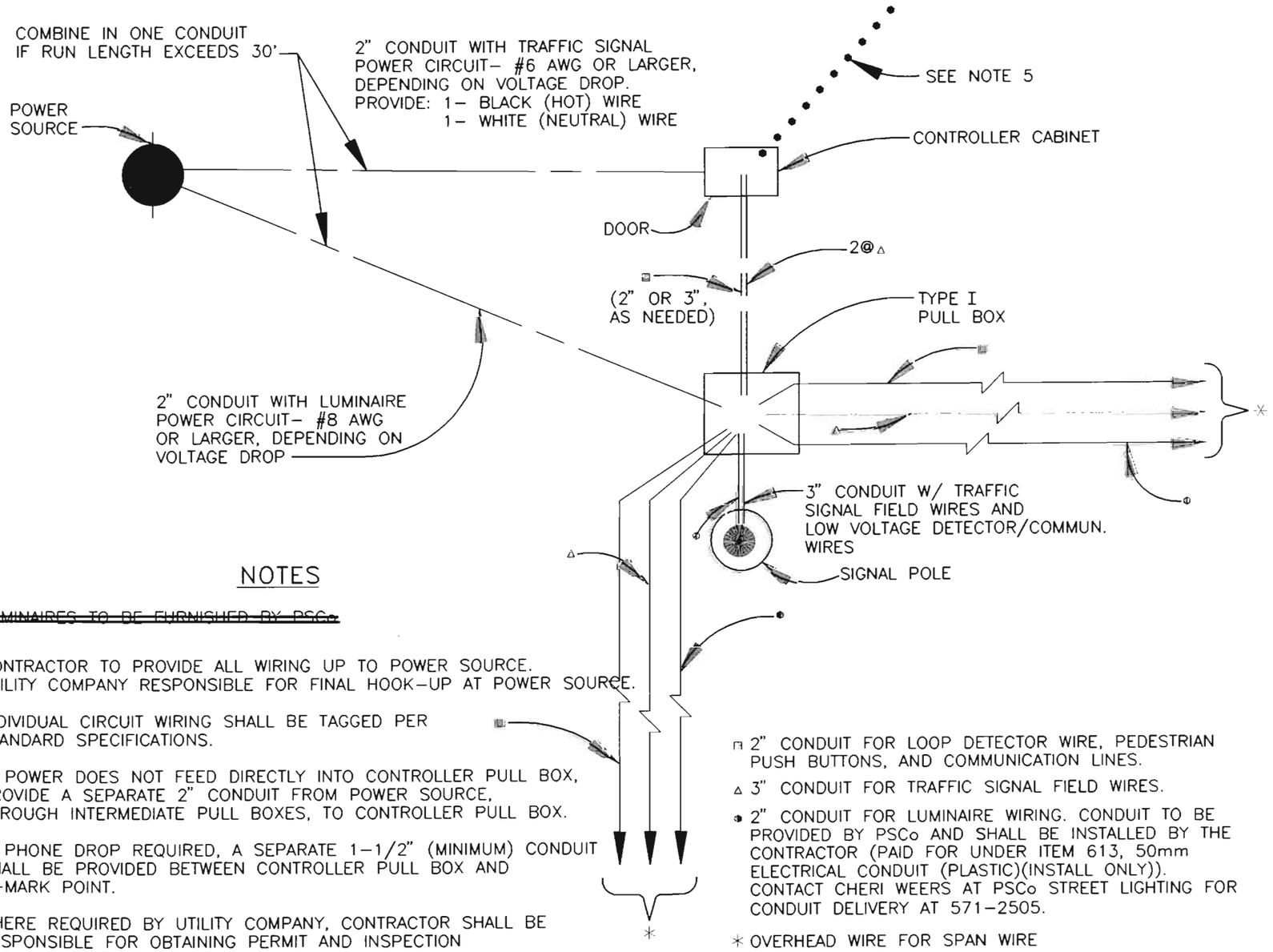

NOTES

~~1. LUMINAIRES TO BE FURNISHED BY PSCo.~~

2. CONTRACTOR TO PROVIDE ALL WIRING UP TO POWER SOURCE. UTILITY COMPANY RESPONSIBLE FOR FINAL HOOK–UP AT POWER SOURCE.
3. INDIVIDUAL CIRCUIT WIRING SHALL BE TAGGED PER STANDARD SPECIFICATIONS.
4. IF POWER DOES NOT FEED DIRECTLY INTO CONTROLLER PULL BOX, PROVIDE A SEPARATE 2" CONDUIT FROM POWER SOURCE, THROUGH INTERMEDIATE PULL BOXES, TO CONTROLLER PULL BOX.
5. IF PHONE DROP REQUIRED, A SEPARATE 1–1/2" (MINIMUM) CONDUIT SHALL BE PROVIDED BETWEEN CONTROLLER PULL BOX AND D–MARK POINT.
6. WHERE REQUIRED BY UTILITY COMPANY, CONTRACTOR SHALL BE RESPONSIBLE FOR OBTAINING PERMIT AND INSPECTION FROM THE STATE ELECTRICAL BOARD.

- ▫ 2" CONDUIT FOR LOOP DETECTOR WIRE, PEDESTRIAN PUSH BUTTONS, AND COMMUNICATION LINES.
- △ 3" CONDUIT FOR TRAFFIC SIGNAL FIELD WIRES.
- ◉ 2" CONDUIT FOR LUMINAIRE WIRING. CONDUIT TO BE PROVIDED BY PSCo AND SHALL BE INSTALLED BY THE CONTRACTOR (PAID FOR UNDER ITEM 613, 50mm ELECTRICAL CONDUIT (PLASTIC)(INSTALL ONLY)). CONTACT CHERI WEERS AT PSCo STREET LIGHTING FOR CONDUIT DELIVERY AT 571–2505.
- ✳ OVERHEAD WIRE FOR SPAN WIRE INSTALLATION

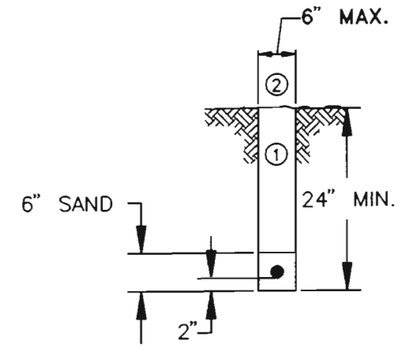

UNDER GRASS/GROUND TRENCHING DETAIL

NOTES

① BACKFILL AND TAMP WITH NATIVE MATERIAL TO MATCH COMPACTION OF SURROUNDING GROUND.
② RESEED OR RESOD SURFACE AT DIRECTION OF THE ENGINEER.

TS–10

DOUGLAS COUNTY
STANDARD SIGNAL DETAILS

UNDERGROUND POWER SCHEMATIC– SIGNALS / GROUND TRENCHING

ORIGINAL 6-93 10/16	DATE:	DESIGNED BY:	JOB NO.
	SCALE:	DRAWN BY:	SHEET NO. OF
REVISION DATE			

G:\95088\ACAD\PWR_SORC.dwg, 1"=1', 01/11/96 at 14:22

FEDERAL RD REGION NO.	STATE	PROJ. NO.	SHEET NO.	TOTAL SHEETS
VIII	COLORADO	CC 4781-382	149	154

NOTES

① PROVIDE TYPE III PULL BOX/GROUND ROD AND 2" PVC CONDUIT ONLY IF D EXCEEDS 10'

② PROVIDE 2" GRC CONDUIT WITHOUT PULL BOX/GROUND ROD IF D IS LESS THAN 10'

③ MINIMUM CONDUIT DEPTHS:

UNDER GROUND	24"
UNDER PAVEMENT	30"

④ WHERE REQUIRED BY UTILITY COMPANY, CONTRACTOR SHALL BE RESPONSIBLE FOR OBTAINING PERMIT AND INSPECTION FROM THE STATE ELECTRICAL BOARD.

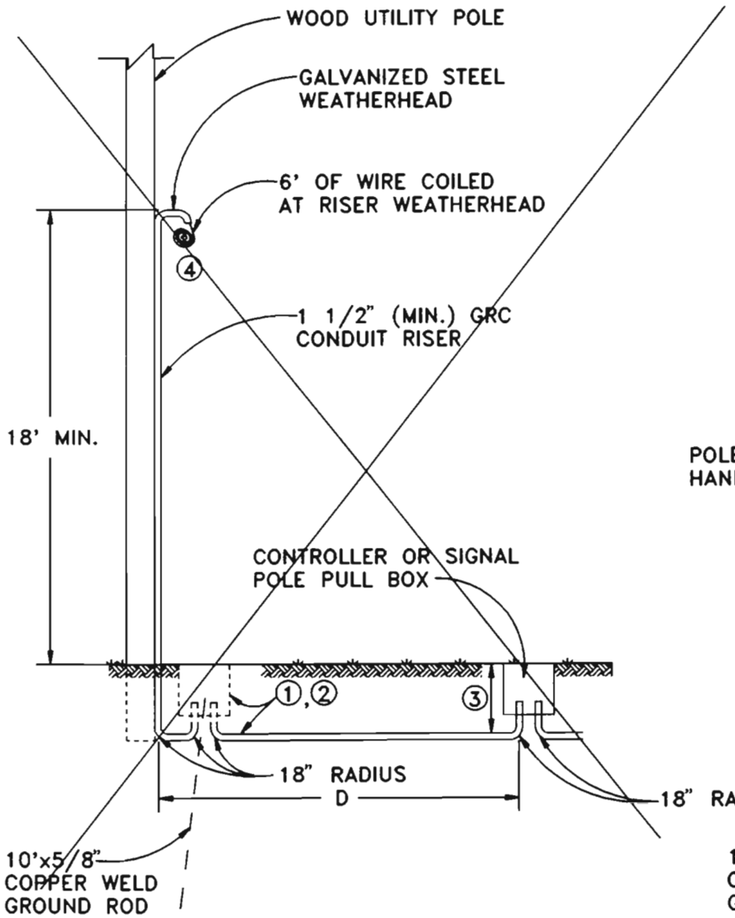

WITH WOOD UTILITY POLE

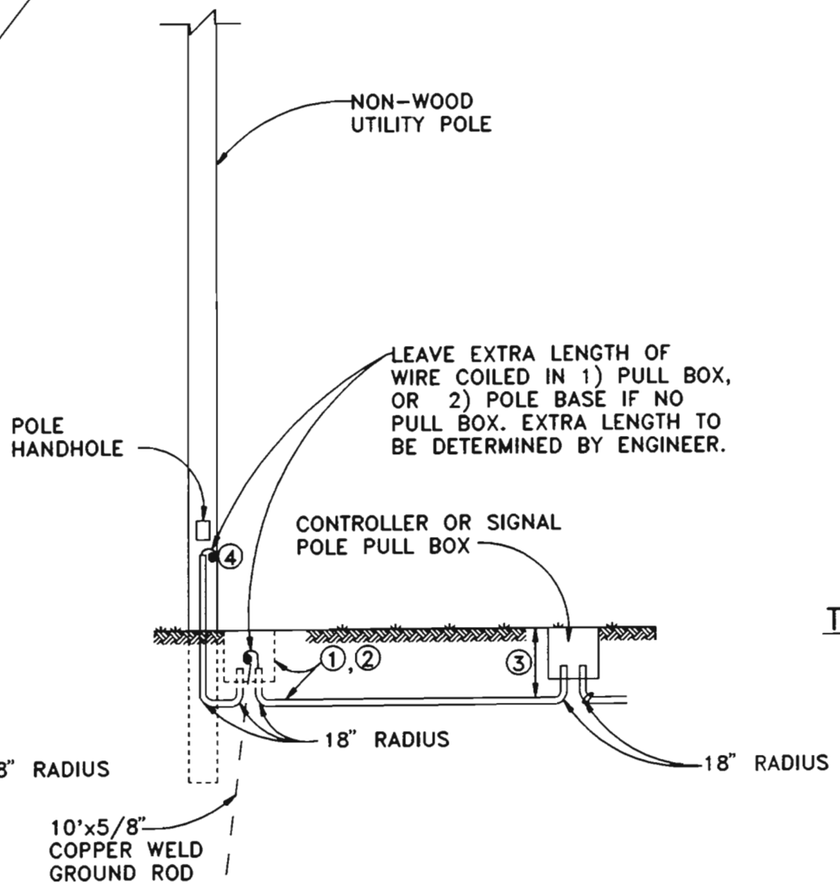

WITH NON-WOOD UTILITY POLE

TYPICAL UNDERGROUND POWER FEED FOR TRAFFIC SIGNALS AND SCHOOL FLASHING BEACON ASSEMBLIES

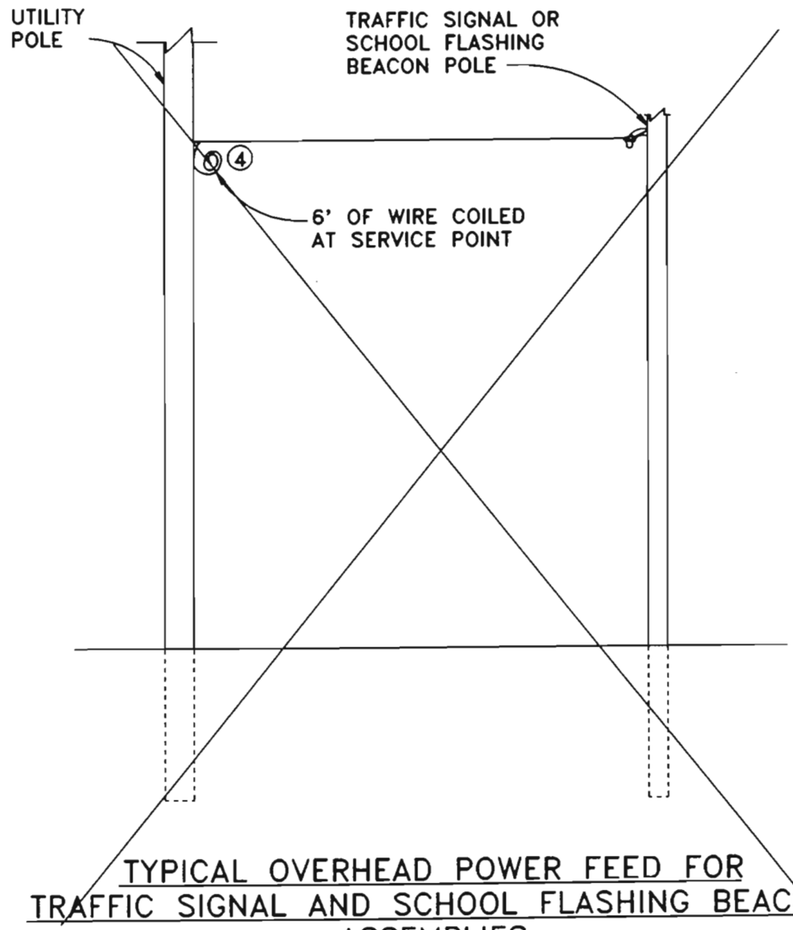

TYPICAL OVERHEAD POWER FEED FOR TRAFFIC SIGNAL AND SCHOOL FLASHING BEACON ASSEMBLIES

TS-11

DOUGLAS COUNTY
STANDARD SIGNAL DETAILS

UNDERGROUND POWER FEED
OVERHEAD POWER FEED

ORIGINAL 6-93 11/16	DATE:	DESIGNED BY:	JOB NO.
	SCALE:	DRAWN BY:	SHEET NO. OF
REVISION DATE			

D:TPF.dwg, 1"=1', 08/18/93 at 11:05

AS CONSTRUCTED			
NO REVISIONS ☐	REVISED 12-3-96	VOID ☐	

FEDERAL RD REGION NO.	DIVISION	PROJ. NO.	SHEET NO.	TOTAL SHEETS
VIII	COLORADO	CC 4701-082	150	154

REVISIONS		

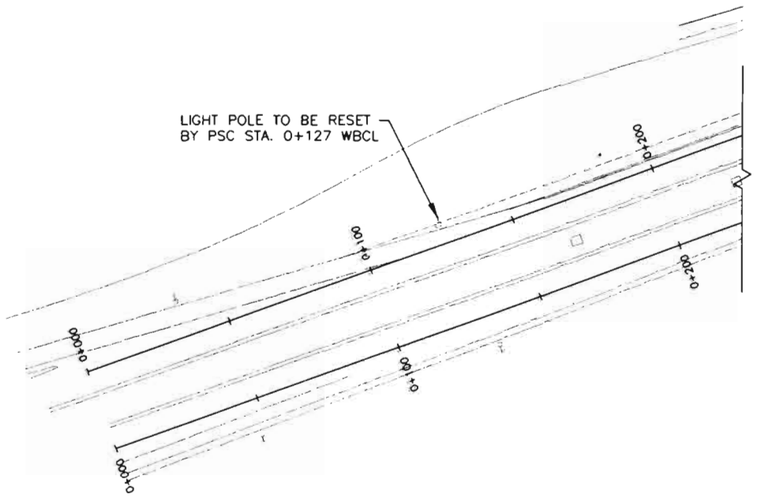

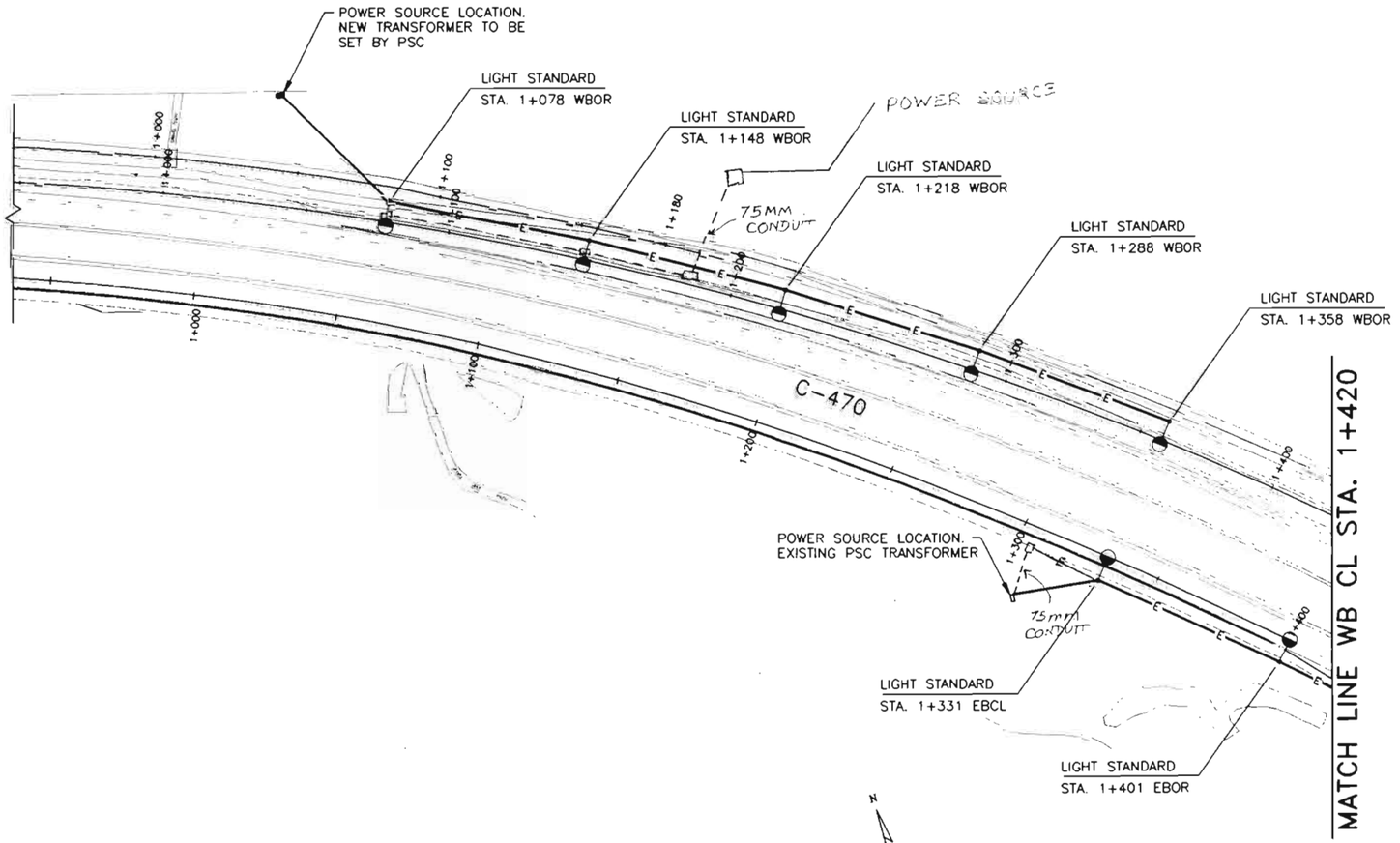

LEGEND

CONVENTIONAL LUMINAIRE 400 W. HPS, 120 V. IN BOX BASED ENCLOSURE MOUNTED ON 12.2 m CIRCULAR STEEL POLES WITH BREAKAWAY BASE.

—E— DIRECT BURIAL CABLE

STATION	LIGHT STANDARD METAL (12.2 METER)	CONCRETE FOUNDATION PAD	LUMINAIRE HIGH PRESSURE SODIUM (400 WATT)	DIRECT BURIED CABLE	WIRING	RESET LIGHT STANDARDS *
	EACH	EACH	EACH	METER	LUMP SUM	EACH
0+127 WBCL						1
1+078 TO 1+358 WBOR	5	5	5	355		
1+331 TO 1+592 EBCL/EBOR	5	5	5	310		
PROJECT TOTAL	10	10	10	665	1	1

* FOR INFORMATION ONLY WORK BY PSC FORCES.

NOTES: WHOLE NUMBERS INDICATE MILLIMETERS
DECIMAL NUMBERS INDICATE METERS.

SEE M-613-1 FOR ADDITIONAL DETAILS

FELSBURG HOLT & ULLEVIG

C-470/YOSEMITE INTERCHANGE

LIGHTING PLAN
C-470 WBCL STA. 0+950 TO STA. 1+420

DATE	PROJECT NO.	DESIGNED BY	DRAWN BY	CHECKED BY	SHEET NO.	OF	SHEETS	DRAWING NO.
FEB 96	95-088	DB	SS	DB	1	2		LP-1

AS CONSTRUCTED			
NO REVISIONS 12-3-96	REVISED	VOID	

FEDERAL RD REGION NO.	DIVISION	PROJ. NO.	SHEET NO.	TOTAL SHEETS
VIII	COLORADO	CC 4701-082	151.	154

REVISIONS		

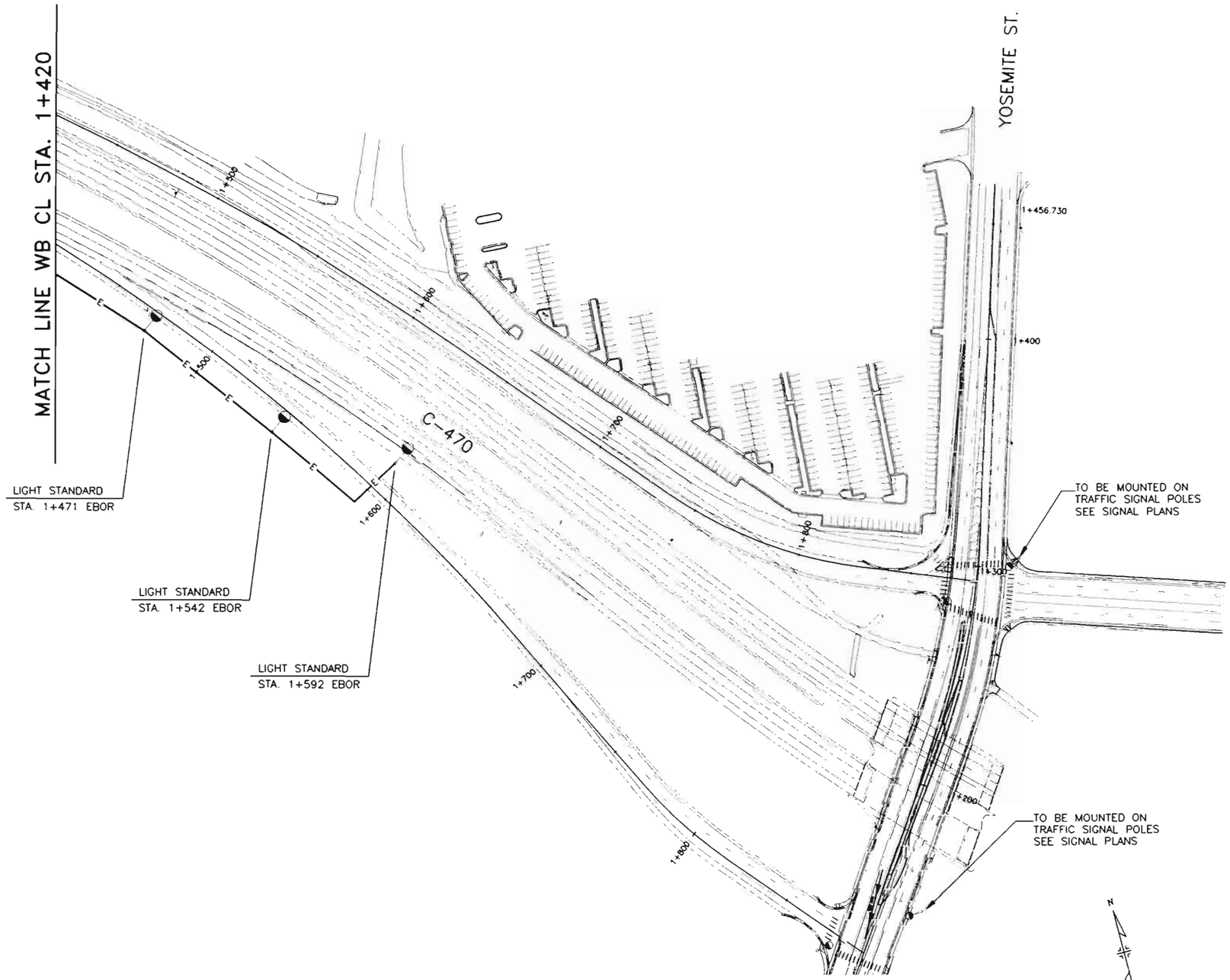

NOTES: WHOLE NUMBERS INDICATE MILLIMETERS
DECIMAL NUMBERS INDICATE METERS.

SEE M-613-1 FOR ADDITIONAL DETAILS

FELSBURG HOLT & ULLEVIG

C-470/YOSEMITE INTERCHANGE

LIGHTING PLAN
C-470 WBCL STA. 1+420 TO STA. 1+878.735

DATE	PROJECT NO.	DESIGNED BY DB	SHEET NO. 2	DRAWING NO.
FEB 96	95-088	DRAWN BY SS	OF 2 SHEETS	LP-2
		CHECKED BY DB		

Colorado Department of Transportation
CDOT
Staff Design: Ed Demming
4201 E. Arkansas
Denver, Colorado 80222
Phone: (303) 757-9083 FAX: (303) 757-9868
DESIGN DETAIL COLLECTION

Slotted Rail Terminal (SRT-350)

Designer:	E. Demming	Structure Numbers	
Detailer:	S. Smith		
Sheet Subset:	606-1	Subset Sheets:	1 of 1

Computer File Information			
Creation Date:	1/8/96	Initials:	SPS
Last Modification Date:	2/8/96	Initials:	SPS
Full Path:	HQ Common\Designd\606-1.dwg		
Drawing File Name:	606-1.dwg		
Acad Ver. R12	Scale:	Units: mm (Inches)	

Index of Revisions

Project No./Code	As Constructed
CC 4701-082	No Revisions: 12-3-96
	Revised:
Sheet Number 152 of 154 total sheets	Void:

OFFSET NOTE:
THE POST OFFSET DIMENSIONS ARE GIVEN TO THE CENTER OF THE TRAFFIC FACE OF THE BLOCKOUTS, EXCEPT AT THE FIRST TWO POSTS, WHERE THE DIMENSION IS TO THE CENTER OF THE TRAFFIC FACE OF THE POST. OFFSET POINTS ARE TO BE LOCATED BY CHORD MEASUREMENTS AT THE BACK OF THE RAIL EQUAL TO THE NOMINAL POST SPACINGS SHOWN. POSTS ARE TO BE SET APPROXIMATELY RADIAL TO THE RAILING AT EACH POST LOCATION.

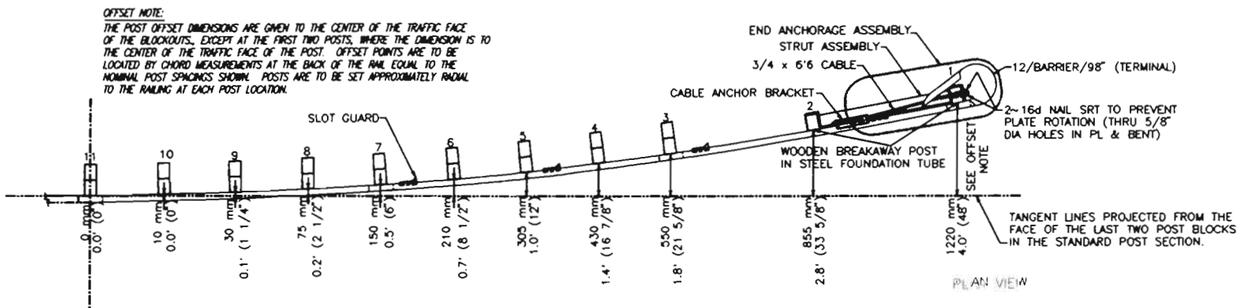

PLAN VIEW

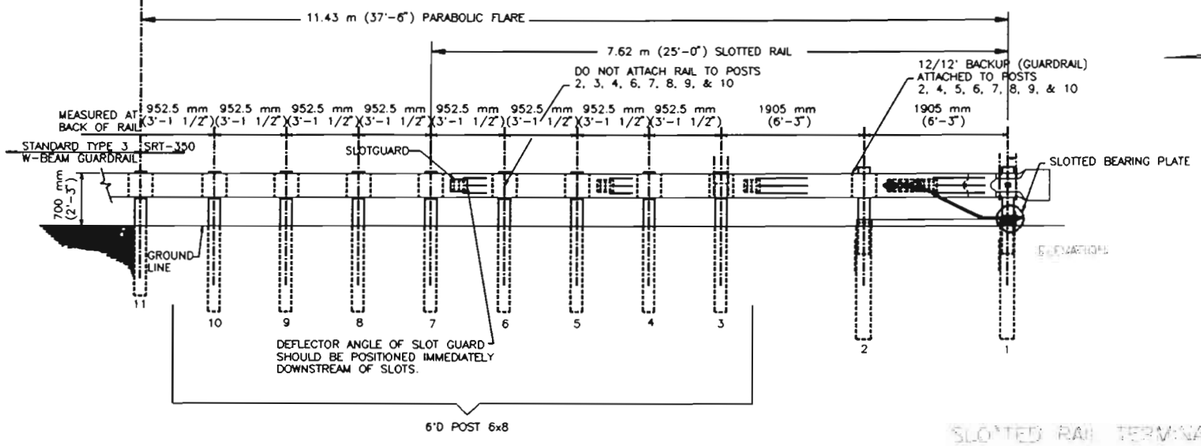

SLOTTED RAIL TERMINAL
Scale: 1:2000

NOTES

1. PAYMENT FOR THE ADDED EMBANKMENT (APPROXIMATELY 60 CU. YDS.) FOR THE FLARE SHALL BE AS FOLLOWS:
   -UNDER PAY ITEM 203 WHEN THE CONTRACT PLAN INCLUDES PAY ITEM 203.
   -INCLUDED IN THE COST OF END ANCHORAGE, TYPE SRT, ITEM 606 PAY ITEM WHEN THE CONTRACT PLAN DOES NOT INCLUDE PAY ITEM 203.
2. BEGIN STEEL POSTS, WHEN SPECIFIED AT POST #8.
3. SUPPLEMENTAL DELINEATION REQUIRED FOR BUFFER TERMINALS. SEE STANDARD PLAN S-612-1, SHEET 5 FOR DETAILS.

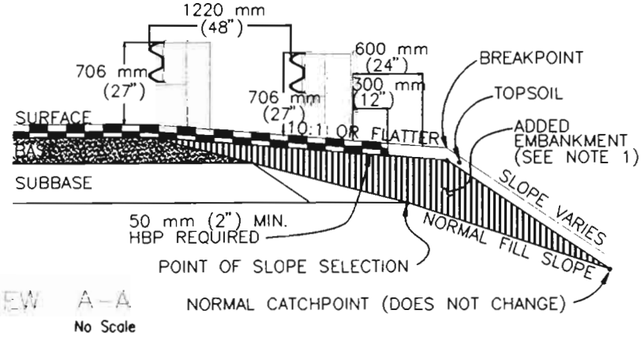

VIEW A-A
No Scale

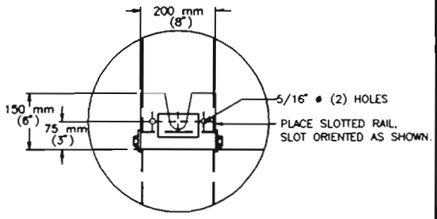

SLOTTED BEARING PLATE
Scale: 1:400

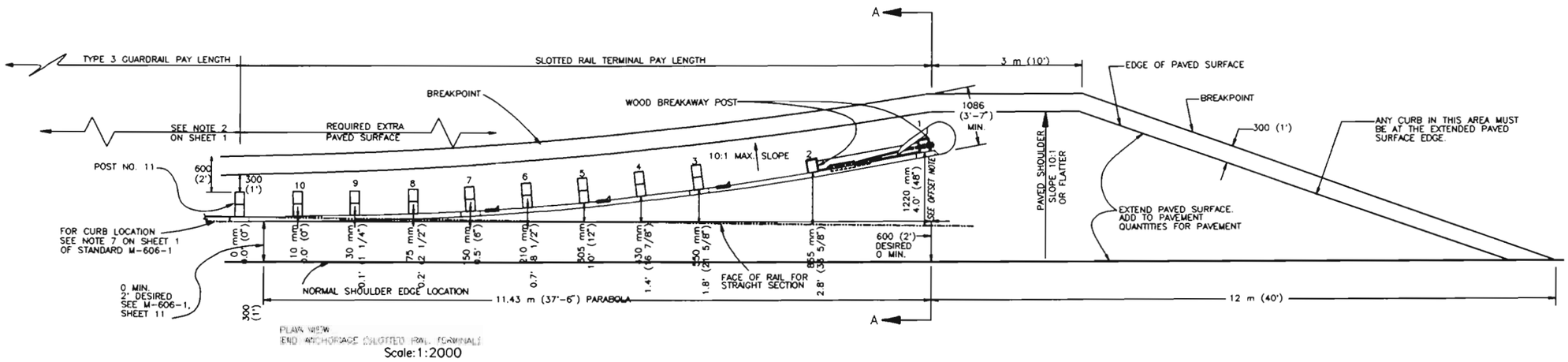

PLAN VIEW
END ANCHORAGE (SLOTTED RAIL TERMINAL)
Scale: 1:2000

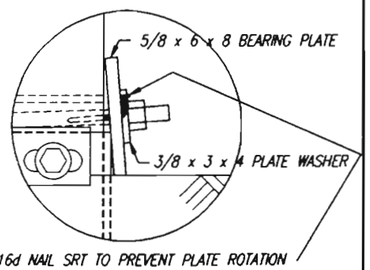

2 ~ 16d NAIL SRT TO PREVENT PLATE ROTATION (THRU 5/8" DIA HOLES IN PL & BENT)

OFFSET NOTE

AS CONSTRUCTED			
NO REVISIONS 12-3-96	REVISED	VOID	

FEDERAL RD REGION NO.	DIVISION	PROJ. NO.	SHEET NO.	TOTAL SHEETS
VIII	COLORADO	CC 4701-082	153	154

REVISIONS		

GENERAL NOTES

SEE PLANS FOR DIMENSION T, THICKNESS OF CONCRETE PAVEMENT.

TIE BARS (PER AASHTO M 284M) FOR LONGITUDINAL AND TRANSVERSE JOINTS SHALL BE GRADE 300 OR 400, EPOXY-COATED, DEFORMED, AND OF THE FOLLOWING MINIMUM SIZES: T < 200, NO.10; T = 200 TO 250, NO.15, T > 250, NO.20. WHEN TIE BARS ARE STABBED INTO AN (L) JOINT, THE CONTRACTOR SHALL DEMONSTRATE BY TESTING AT LEAST 15 OF THE BARS THAT THE AVERAGE BAR PULLOUT RESISTANCE IS AT LEAST 35 kN WITH SLIPPAGE OF 2 mm OR LESS. THE CONTRACTOR SHALL PERFORM ADDITIONAL PULLOUT TESTS AND TAKE CORRECTIVE ACTION WHEN AND AS DIRECTED. CONCRETE STRENGTH TO BE 17 MPa BEFORE TESTING.

DOWEL BARS (PER AASHTO M 254) FOR TRANSVERSE JOINTS SHALL BE EPOXY-COATED, SMOOTH, LIGHTLY GREASED FOR THEIR FULL LENGTH, AND OF THE FOLLOWING MINIMUM SIZES:

T ≤ 200, 32 mm DIA.; T > 200 TO 300, 38 mm DIA.; T > 300, T/8 mm DIA.

DOWEL BARS SHALL BE FURNISHED IN A RIGID WELDED ASSEMBLY, OR DOWEL BARS MAY BE PLACED BY MACHINE WHEN THE CONTRACTOR DEMONSTRATES THAT THE DOWEL PLACEMENT IS WITHIN REQUIRED TOLERANCES. THE RIGID ASSEMBLY SHALL BE FABRICATED FROM NO. 1/0 (7.77 mm Ø) WIRE OR HEAVIER WITH VERTICAL SUPPORT WIRES EVERY 300 mm. ASSEMBLY SHALL BE SECURELY FASTENED TO THE SUBBASE AND CONSTRUCTED TO FIRMLY HOLD ALL THE DOWEL BARS AT T/2, PARALLEL TO EACH OTHER AND TO THE PAVEMENT GRADE AND ALIGNMENT. DOWEL PLACEMENT TOLERANCES ARE: HORIZONTAL LOCATION ± 25, VERTICAL POSITION ± 6, SKEW FROM PARALLEL (PER 450 mm) 3 mm.

ON 4 LANE DIVIDED HIGHWAYS, THE 2 LANE DIRECTIONAL PAVEMENT AND BOTH SHOULDERS SHALL BE PLACED WITH (E) LONGITUDINAL SAWED CONTRACTION JOINTS. ON A PAVEMENT HAVING 3 OR 4 TRAVEL LANES, THE LONGITUDINAL JOINT NEAREST THE CENTER OF PAVEMENT SHALL BE A (D) LONGITUDINAL KEY JOINT AND THE OTHER LONGITUDINAL JOINTS SHALL BE (E) SAWED JOINTS.

ON VARIABLE WIDTH SLABS, THE 600 mm OR 1800 mm END OF SLAB WIDTH DIMENSION MAY VARY ± 150.

CONSTRUCTION JOINT GROOVE FOR JOINT SEALANT SHALL BE SAWED TO THE DIMENSIONS SHOWN.

THE TINED FINISH SHALL BE GROOVES OF 5 mm x 5 mm SPACED 25 mm CENTER-TO-CENTER AND PARALLEL TO THE TRANSVERSE JOINT. STOP GROOVES 150 mm FROM THE MEDIAN EDGE OF LEFT SHOULDER PAVEMENT AND 900 mm FROM THE OUTER EDGE OF RIGHT SHOULDER PAVEMENT.

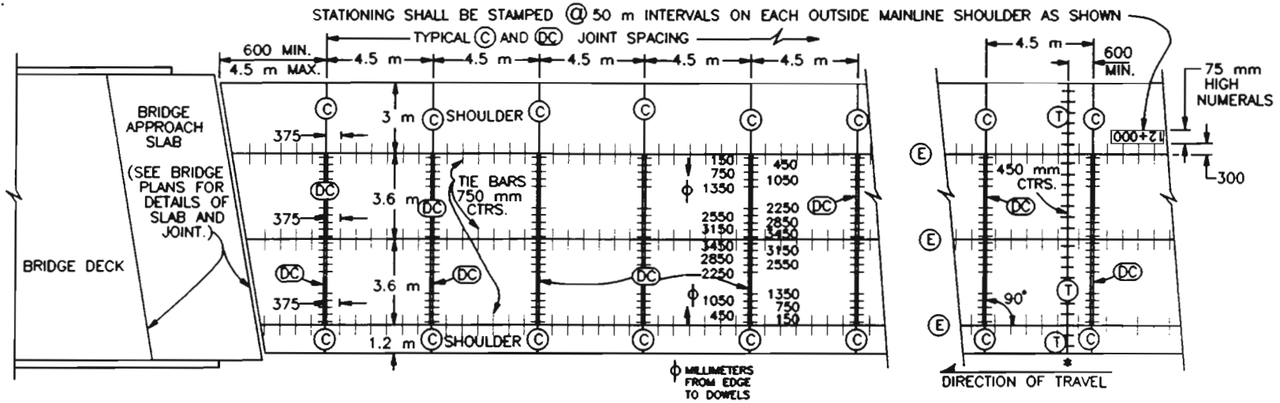

CONCRETE ROADWAY WITH CONCRETE SHOULDERS

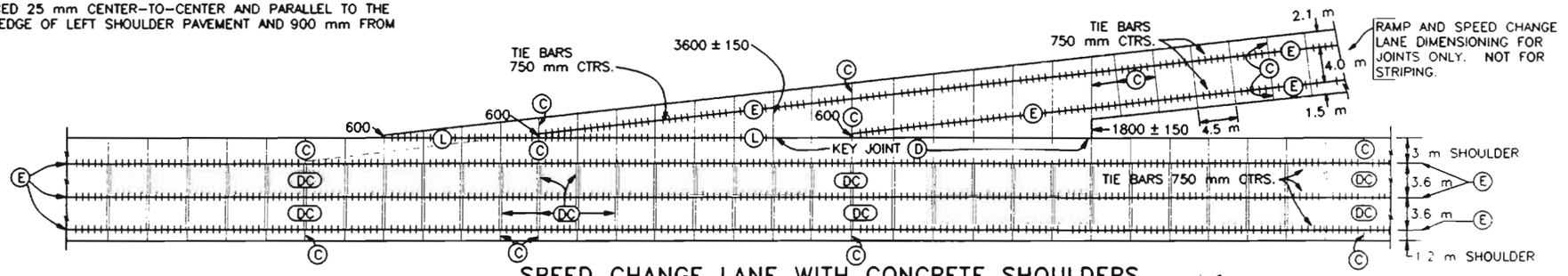

SPEED CHANGE LANE WITH CONCRETE SHOULDERS

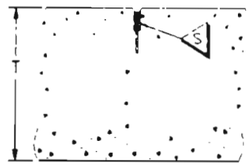

(C) TRANSVERSE CONTRACTION JOINT

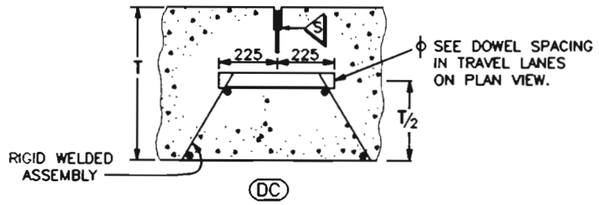

(DC) DOWELED TRANSVERSE CONTRACTION JOINT

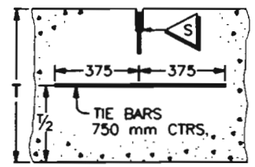

(E) LONGITUDINAL CONTRACTION JOINT

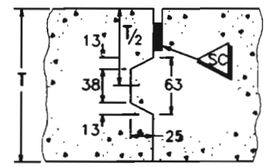

(D) LONGITUDINAL CONSTRUCTION JOINT

A KEYWAY IS ALLOWED TO FACILITATE USE OF BENT, GRADE 300 TIE BARS OR APPROVED TWO PIECE CONNECTORS.

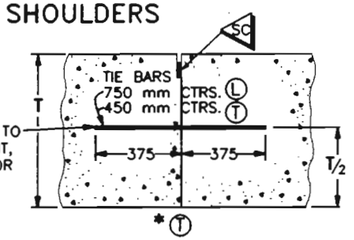

*(T) TRANSVERSE CONSTRUCTION JOINT

▲(L) LONGITUDINAL CONSTRUCTION JOINT

▲ TO BE USED WHEN TRAFFIC LANE IS ADDED SEPARATELY OR FOR TAPERS OR SPEED CHANGE LANES. ALTERNATIVE LONGITUDINAL JOINT LOCATIONS AT SPEED CHANGE LANE MAY BE USED IF APPROVED.

* REQUIRED WHEN POUR HAS BEEN INTERRUPTED MORE THAN 30 MINUTES AND AT END OF A DAY'S POUR.

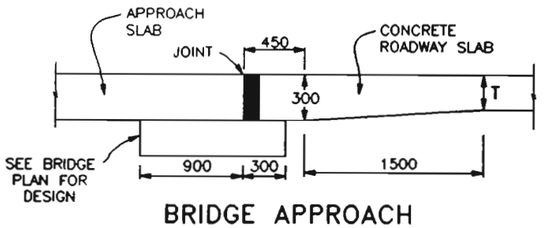

BRIDGE APPROACH

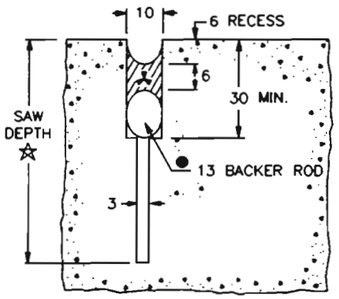

SAWED JOINT (S)

● BACKER ROD OF CLOSED CELL POLYETHYLENE STRAND AS APPROVED.

⁂ JOINT FILLER SHALL BE A SILICONE SEALANT THAT IS ON THE DEPARTMENT'S APPROVED SILICONE SEALANT LIST. IT SHALL BE APPLIED IN ACCORDANCE WITH THE MANUFACTURER'S RECOMMENDATIONS.

☆ LONGITUDINAL JOINT, T/3
TRANSVERSE JOINT, T/4

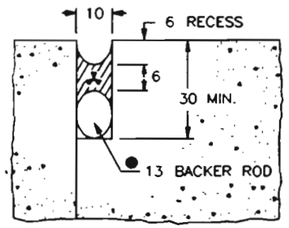

SEAL AT CONSTRUCTION JOINT (SC)

DIMENSIONS ARE MILLIMETERS(mm) UNLESS OTHERWISE NOTED.

FELSBURG HOLT & ULLEVIG

C-470/YOSEMITE INTERCHANGE

CONCRETE PAVEMENT JOINTS

DATE	PROJECT NO.	DESIGNED BY	DRAWN BY	CHECKED BY	SHEET NO.	OF SHEETS	DRAWING NO.
FEB 96	95-088						

AS CONSTRUCTED			
NO REVISIONS ☐	REVISED ☐	VOID 12/31/96	

FEDERAL RD REGION NO.	DIVISION	PROJ. NO.	SHEET NO.	TOTAL SHEETS
VIII	COLORADO	CC 4701-082	1000	

REVISIONS		

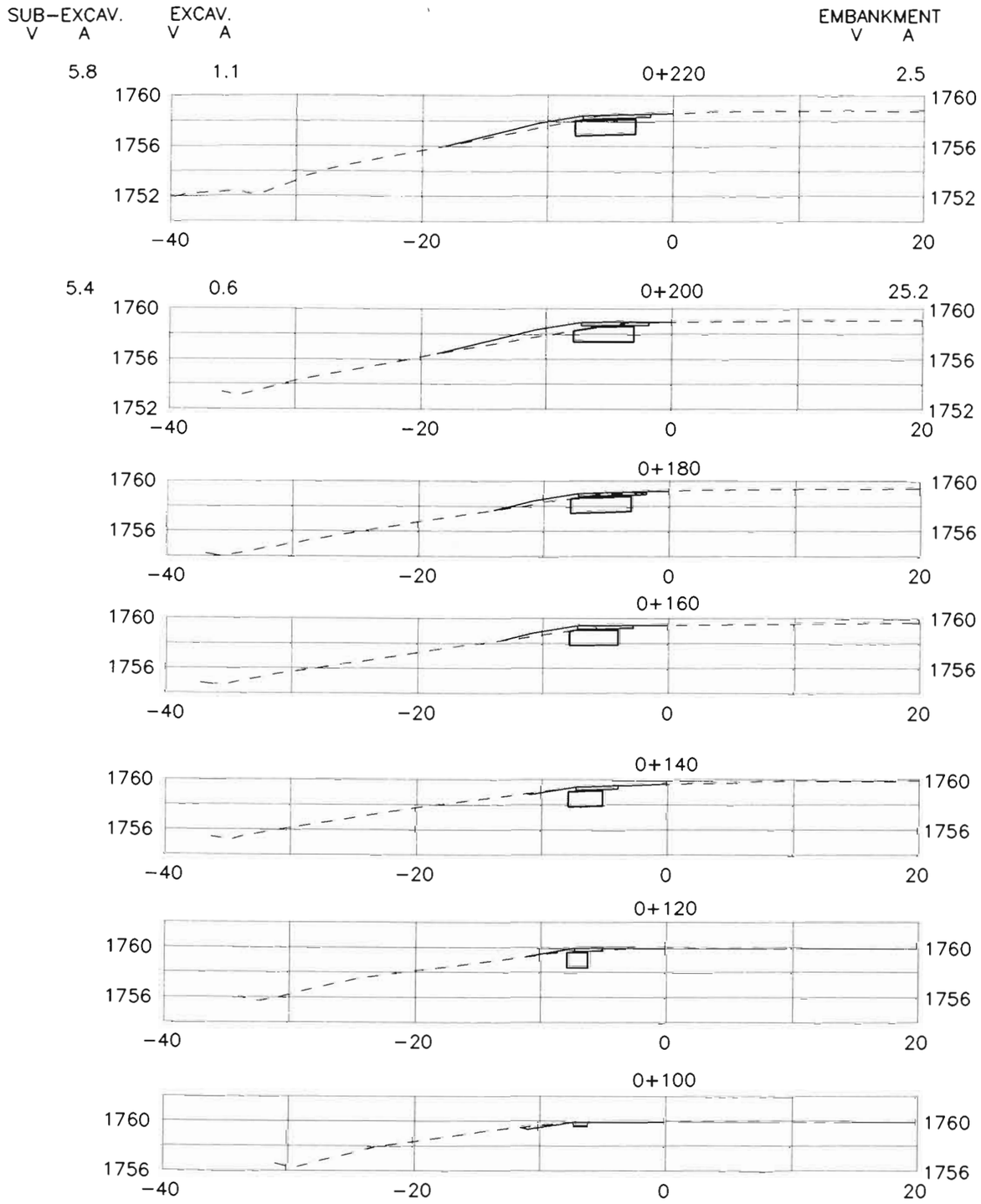

WB C-470

FELSBURG HOLT & ULLEVIG

C-470/YOSEMITE INTERCHANGE

WESTBOUND C-470 MAINLINE STA. 0+100 TO 0+220

DATE	PROJECT NO.	DESIGNED BY	DRAWN BY	CHECKED BY	SHEET NO.	OF	SHEETS	DRAWING NO.
JAN 96	95-088	CH	SS	DB	1	15		XS-1

G:\95088\ACAD\A5088855.dwg, 1.1, 01/08/96 at 09:41
COMPUTER GENERATED DRAWING. DO NOT ALTER MANUALLY

AS CONSTRUCTED			
NO REVISIONS ☐	REVISED ☐	VOID 12/3/96	

FEDERAL RD REGION NO.	DIVISION	PROJ. NO.	SHEET NO.	TOTAL SHEETS
VIII	COLORADO	CC 4701-082	1001	

REVISIONS		

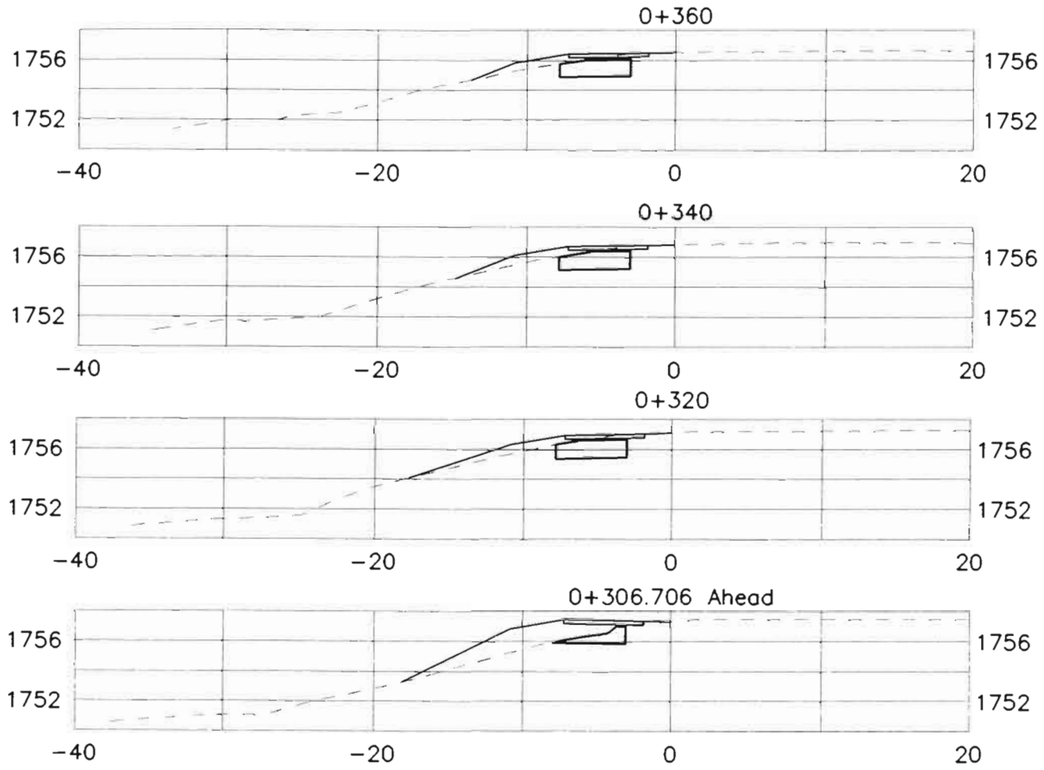

Acres Green Bridge Widening

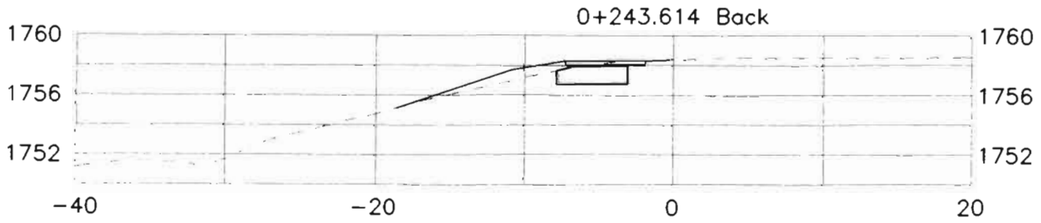

WB C-470

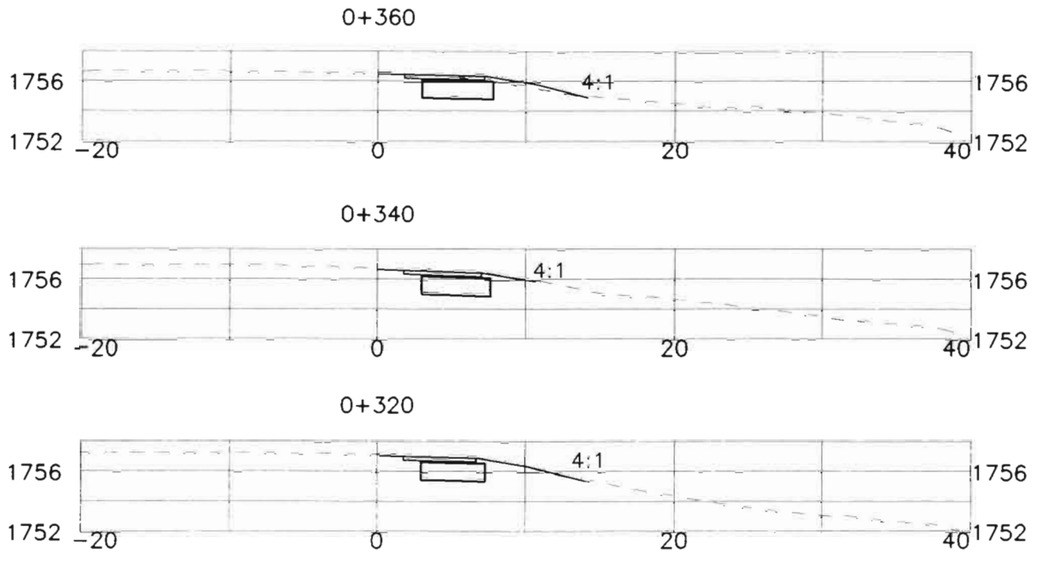

EB C-470

FELSBURG HOLT & ULLEVIG

C-470/YOSEMITE INTERCHANGE

WESTBOUND C-470 MAINLINE STA. 0+240 TO 0+360
EASTBOUND C-470 MAINLINE STA. 0+320 TO 0+360

DATE	PROJECT NO.	DESIGNED BY CH DRAWN BY SS CHECKED BY DB	SHEET NO. 2 OF 15 SHEETS	DRAWING NO.
FEB 96	95-088			XS-2

AS CONSTRUCTED			
NO REVISIONS ☐	REVISED ☐	VOID ☐	

FEDERAL RD REGION NO.	DIVISION	PROJ. NO	SHEET NO.	TOTAL SHEETS
VIII	COLORADO	CC 4701-082	1002	

REVISIONS		

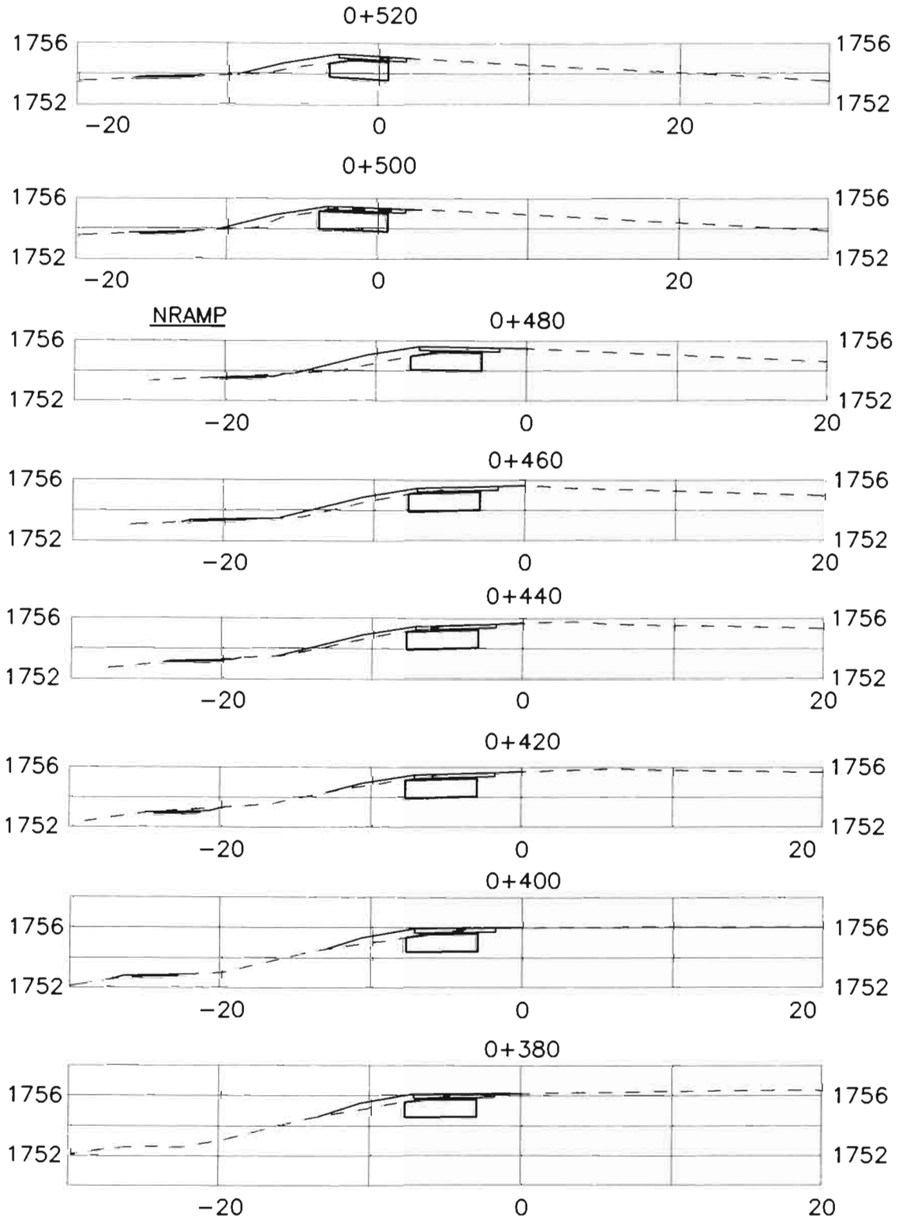

WB C-470

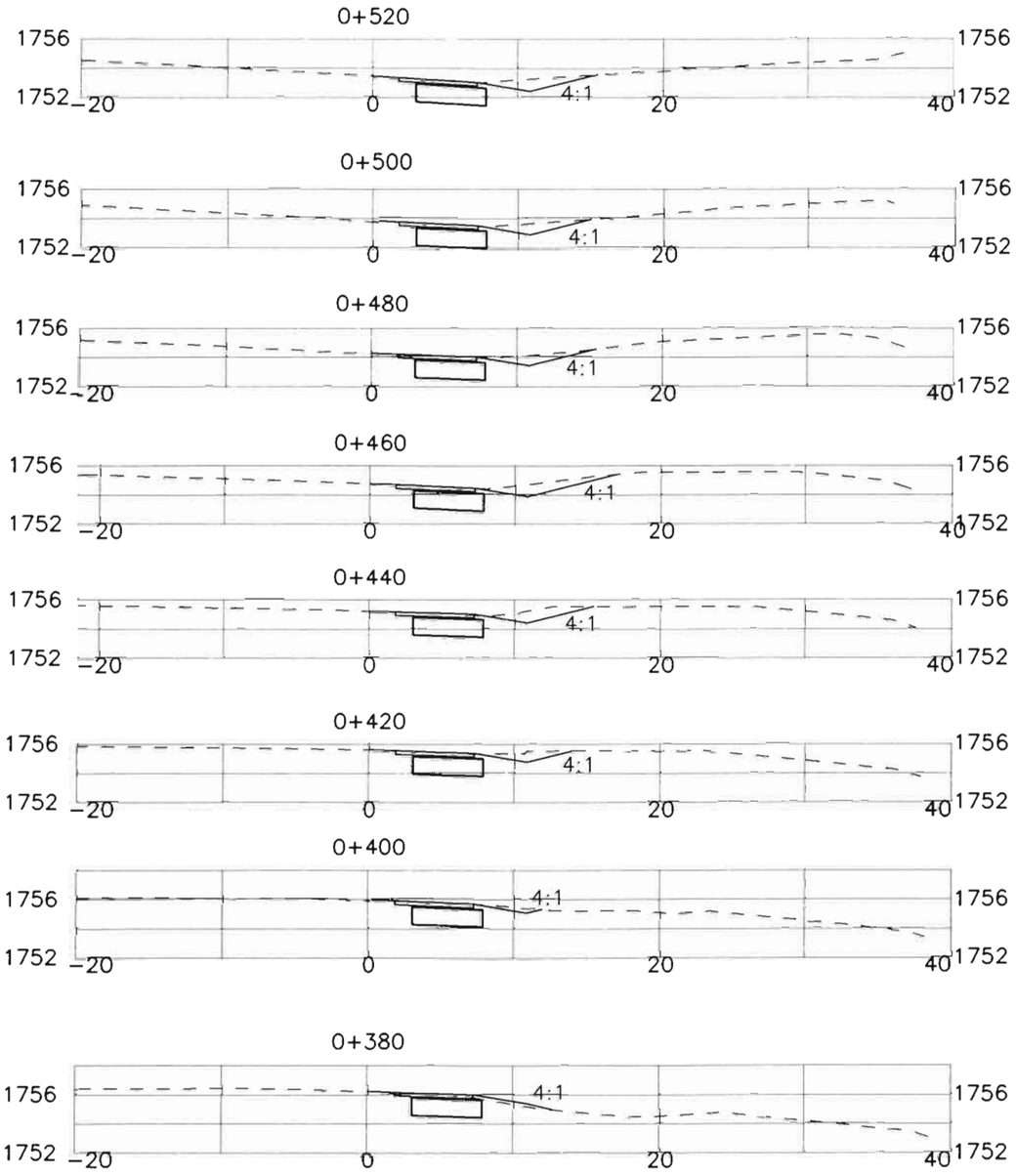

EB C-470

FELSBURG HOLT & ULLEVIG

C-470/YOSEMITE INTERCHANGE

WB MAINLINE 0+380 TO 0+480, NRAMP 0+500 TO 0+520
EASTBOUND C-470 MAINLINE 0+380 TO 0+520

DATE	PROJECT NO.	DESIGNED BY CH	SHEET NO. 3	DRAWING NO.
JAN 96	95-088	DRAWN BY SS		XS-3
		CHECKED BY DB	OF 15 SHEETS	

AS CONSTRUCTED			
NO REVISIONS ☐	REVISED ☐	VOID 12/3/96	

FEDERAL RD REGION NO.	DIVISION	PROJ. NO.	SHEET NO.	TOTAL SHEETS
VIII	COLORADO	CC 4701-082	1003	

REVISIONS		

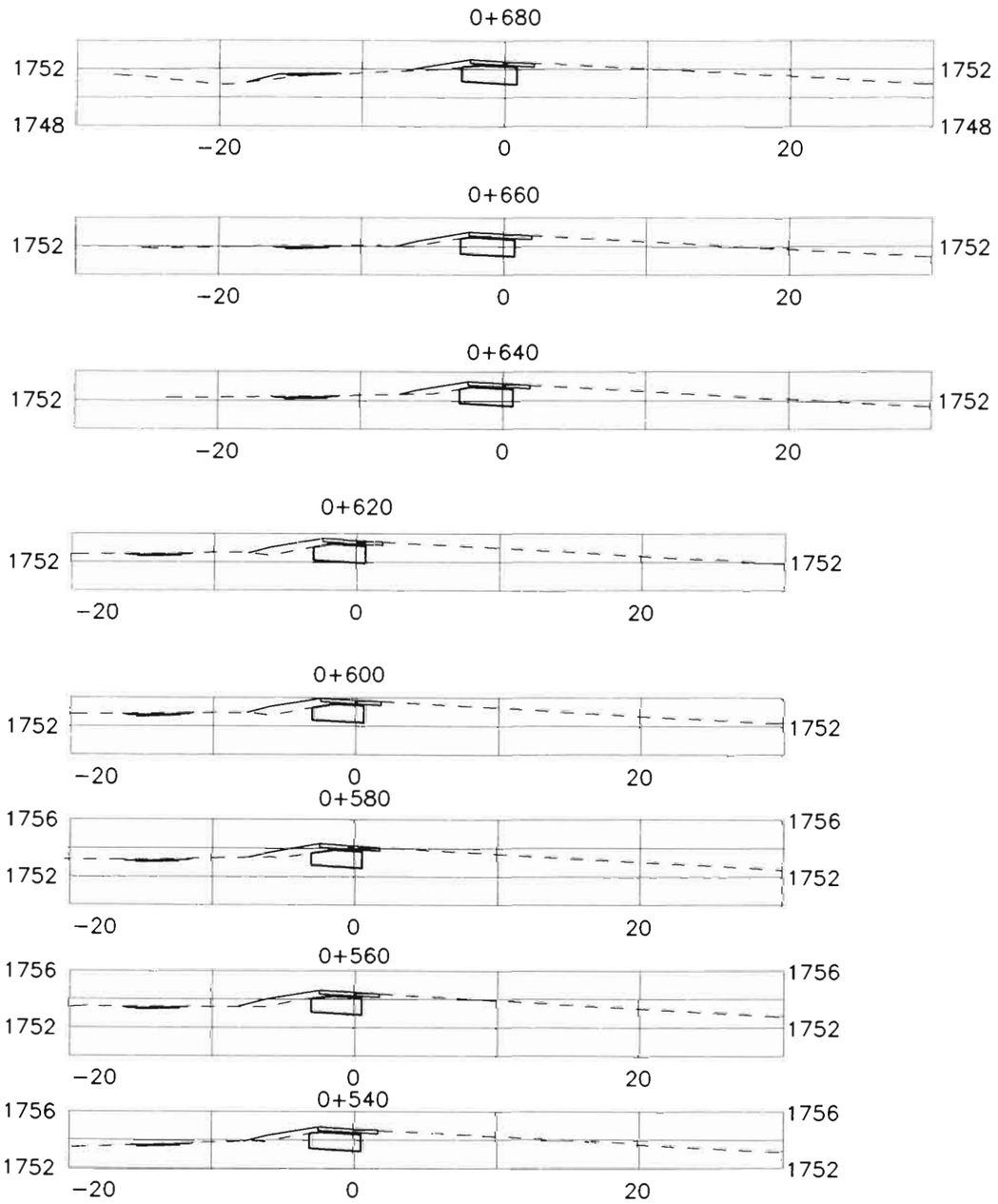

NRAMP

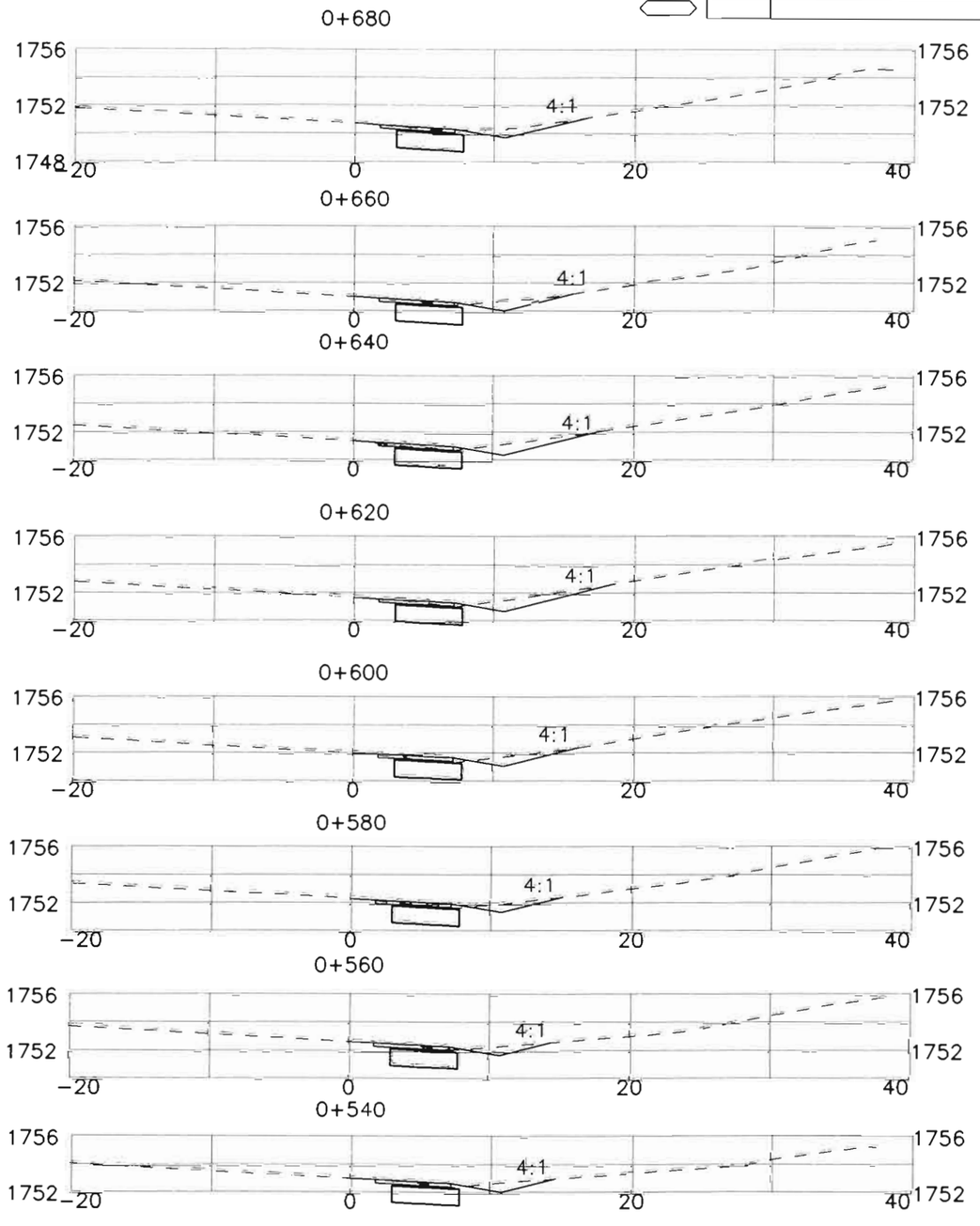

EB C-470

FELSBURG HOLT & ULLEVIG

C-470/YOSEMITE INTERCHANGE

NRAMP 0+540 TO 0+680
EASTBOUND MAINLINE 0+540 TO 0+680

DATE	PROJECT NO.	DESIGNED BY CH	DRAWN BY SS	CHECKED BY DB	SHEET NO. 4	OF 15 SHEETS	DRAWING NO. XS-4
JAN 96	95-088						

C:\95088\ACAD\A5088855.dwg, 1:1, 01/08/96 at 09:59

COMPUTER GENERATED DRAWING DO NOT ALTER MANUALLY

ORIGINAL SCALE: 1:200

AS CONSTRUCTED			
NO REVISIONS ☐	REVISED ☐	VOID 12/3/96	

FEDERAL RD REGION NO.	DIVISION	PROJ. NO.	SHEET NO.	TOTAL SHEETS
VIII	COLORADO	CC 4701-082	1004	

REVISIONS		

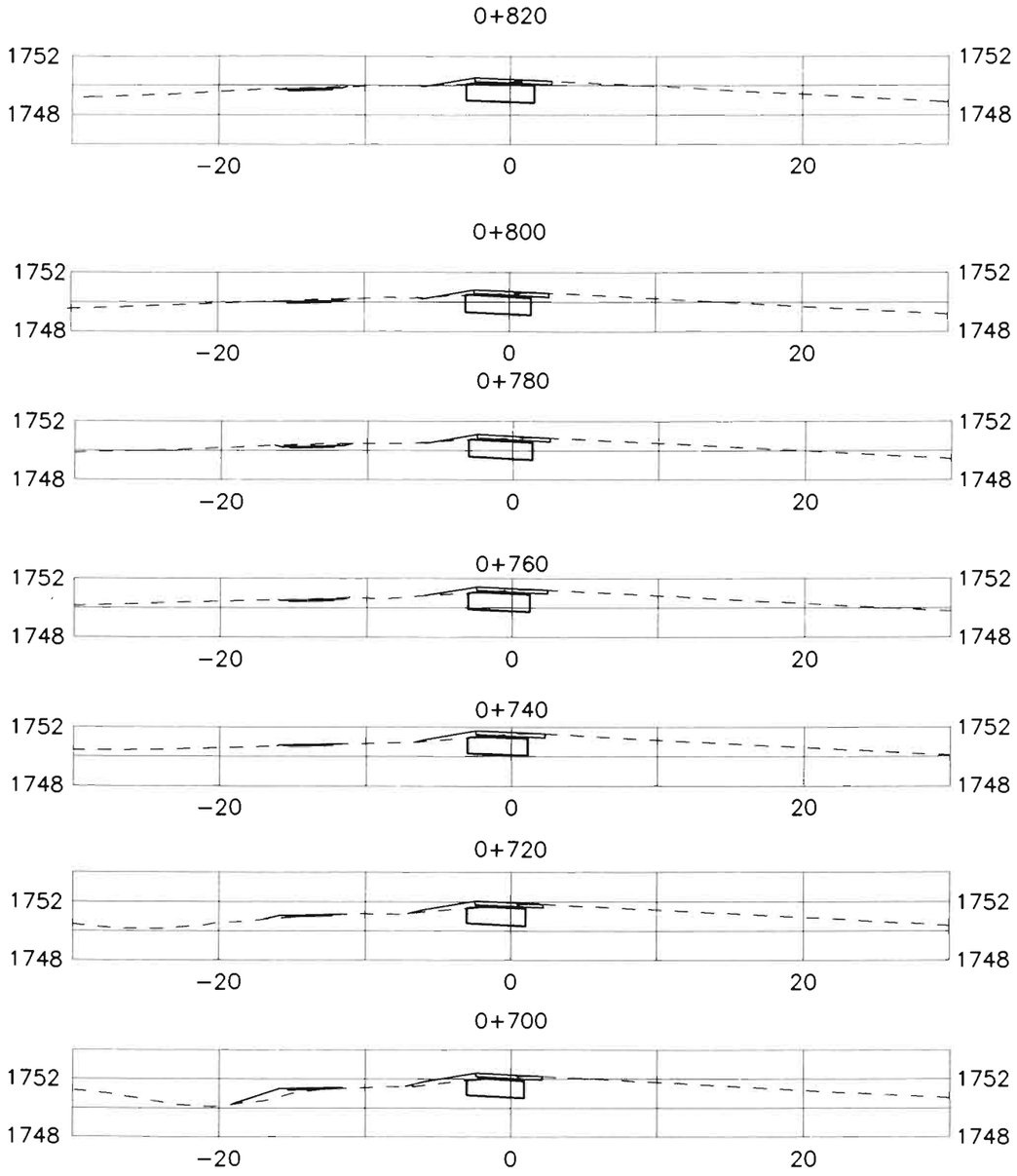

NRAMP

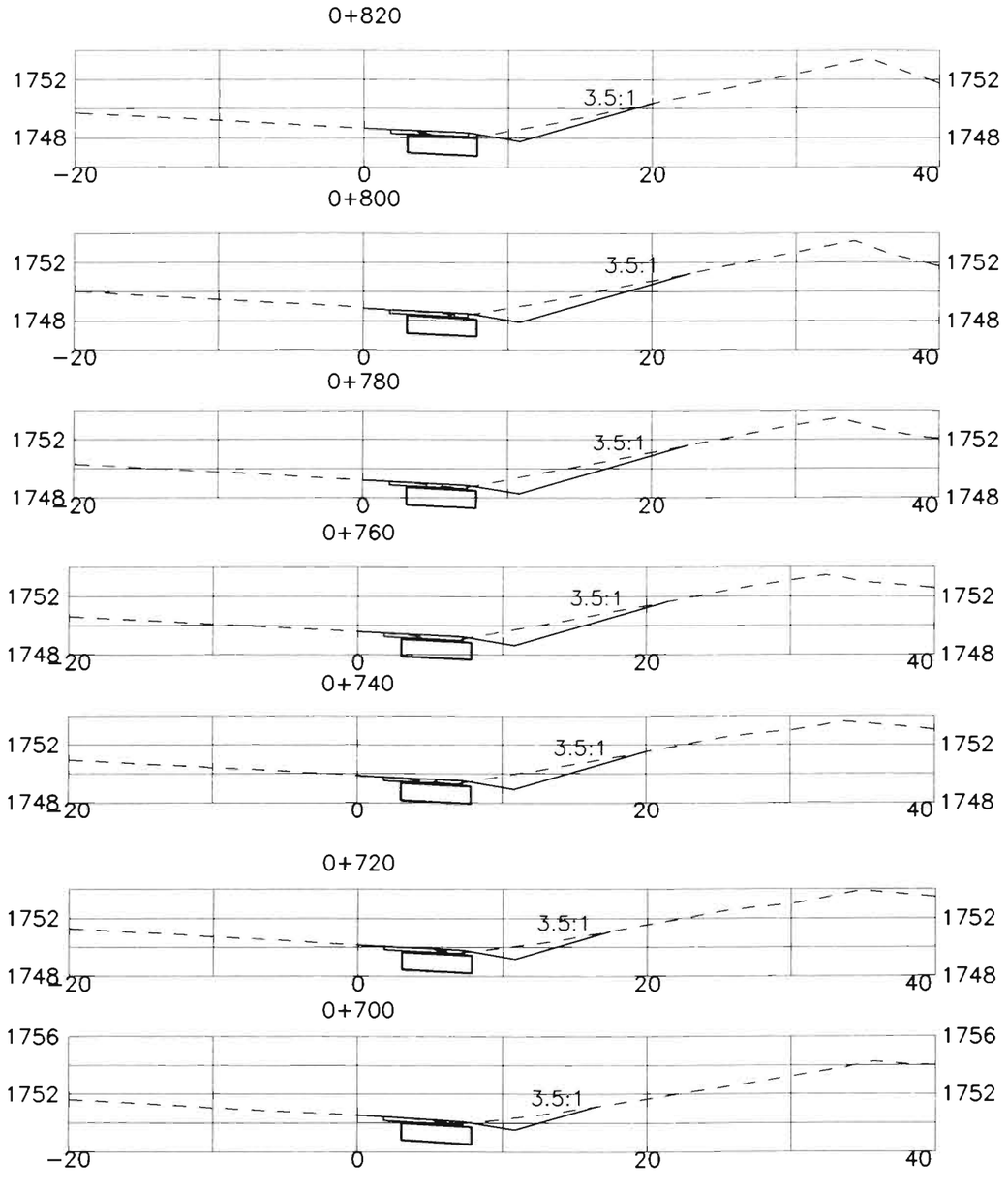

EB C-470

FELSBURG HOLT & ULLEVIG

C-470/YOSEMITE INTERCHANGE

NRAMP 0+700 TO 0+820
EASTBOUND MAINLINE 0+700 TO 0+820

DATE	PROJECT NO.	DESIGNED BY	DRAWN BY	CHECKED BY	SHEET NO.	OF	DRAWING NO.
JAN 96	95-088	CH	SS	DB	5	15 SHEETS	XS-5

C:\95088\ACAD\A5088855.dwg, 1:1, 01/08/96 at 10:23
COMPUTER GENERATED DRAWING, DO NOT ALTER MANUALLY

ORIGINAL SCALE: 1:200

AS CONSTRUCTED					
NO REVISIONS ☐	REVISED ☐	VOID ☐			

FEDERAL RD REGION NO.	DIVISION	PROJ. NO	SHEET NO.	TOTAL SHEETS
VIII	COLORADO	CC 4701-082	1005	

REVISIONS		

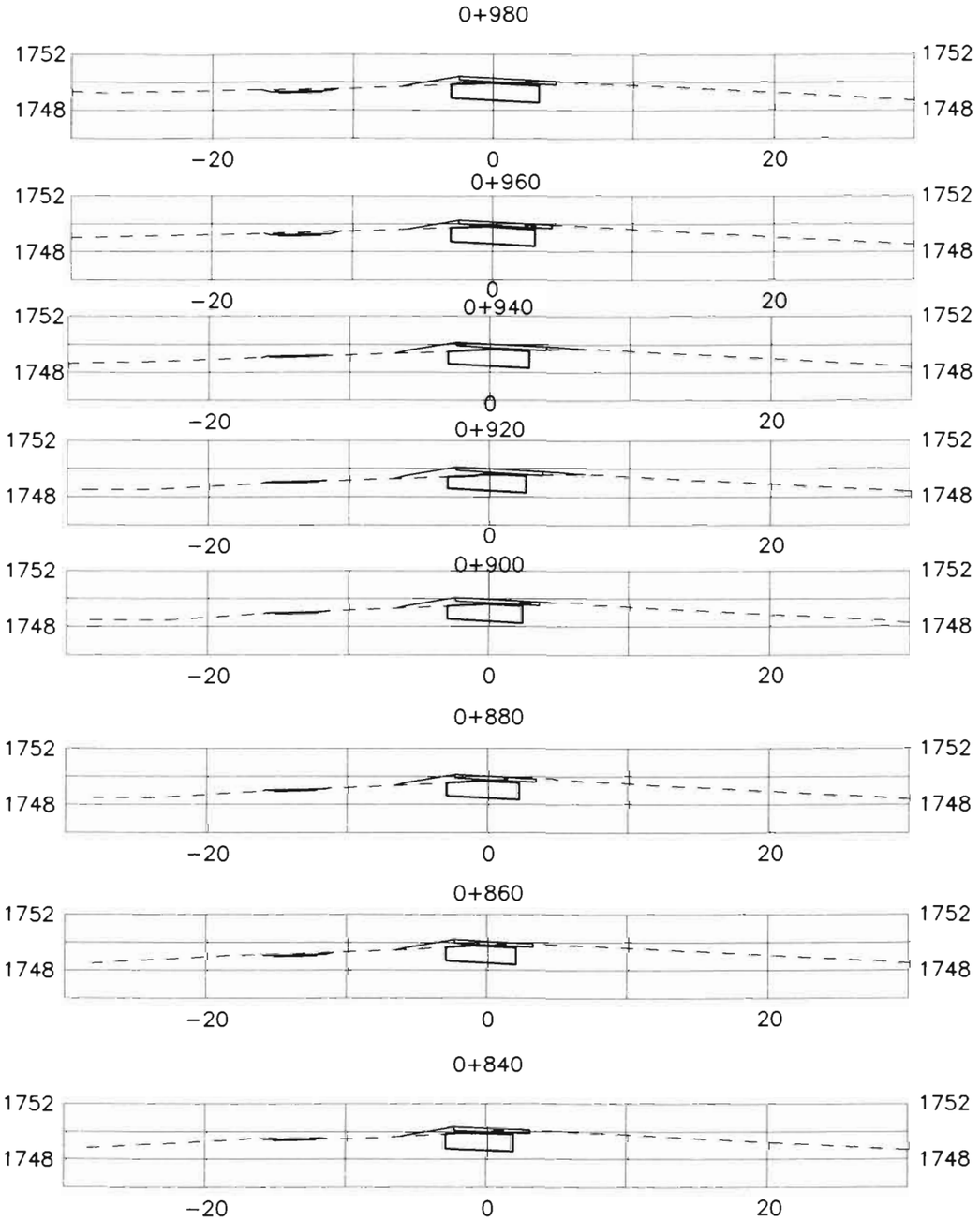

NRAMP

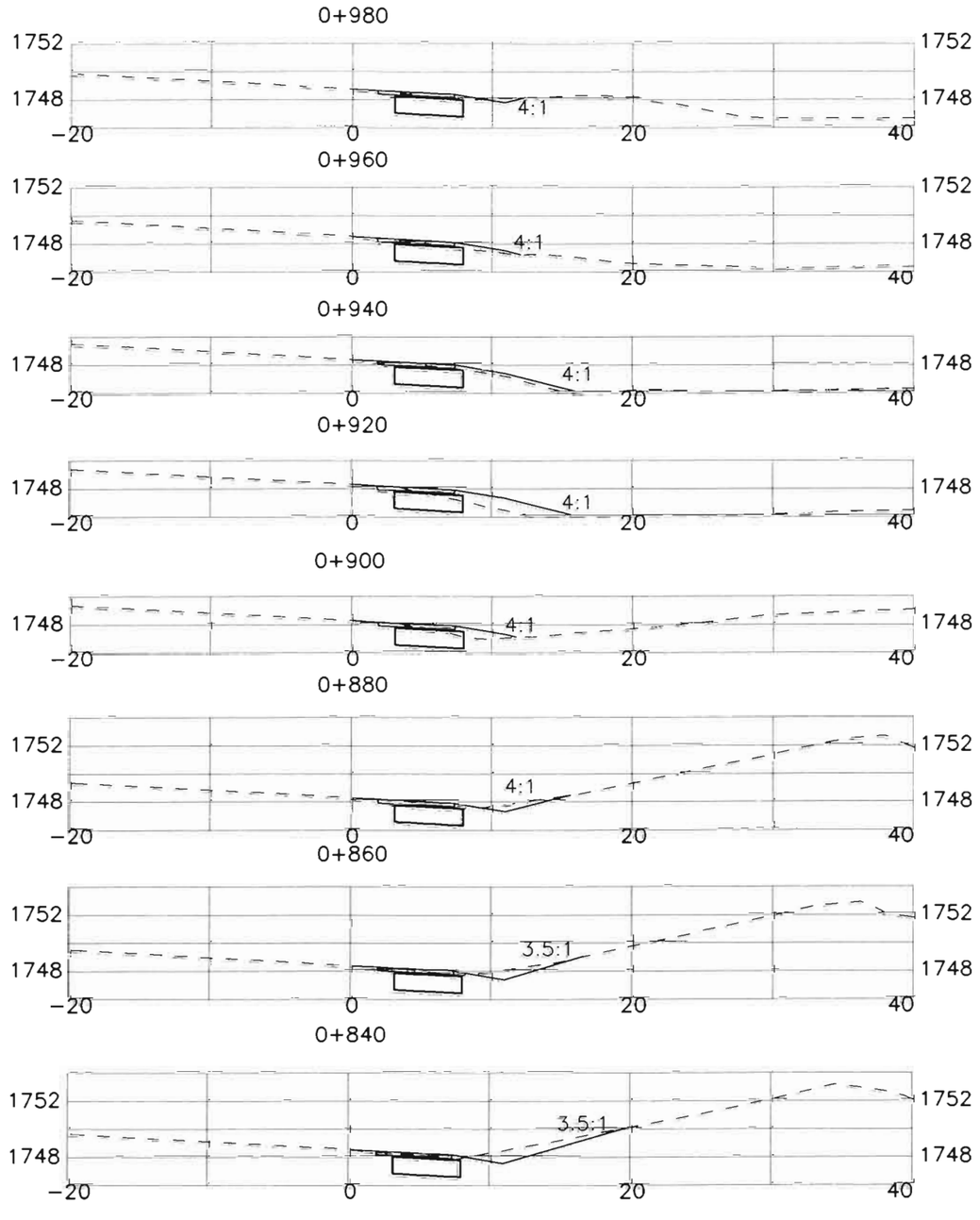

EB C-470

FELSBURG HOLT & ULLEVIG

C-470/YOSEMITE INTERCHANGE

NRAMP 0+840 TO 0+980
EASTBOUND MAINLINE 0+840 TO 0+980

DATE	PROJECT NO.	DESIGNED BY	DRAWN BY	CHECKED BY	SHEET NO.	OF SHEETS	DRAWING NO.
JAN 96	95-088	CH	SS	DB	6	15	XS-6

C:\95088\ACAD\A5088855.dwg, 1.1, 01/08/96 at 09:59

COMPUTER GENERATED DRAWING DO NOT ALTER MANUALLY

ORIGINAL SCALE: 1:200

AS CONSTRUCTED			
NO REVISIONS	REVISED	VOID	11/9/96

FEDERAL RD REGION NO.	DIVISION	PROJ. NO.	SHEET NO.	TOTAL SHEETS
VIII	COLORADO	CC 4701-082	1006	

REVISIONS

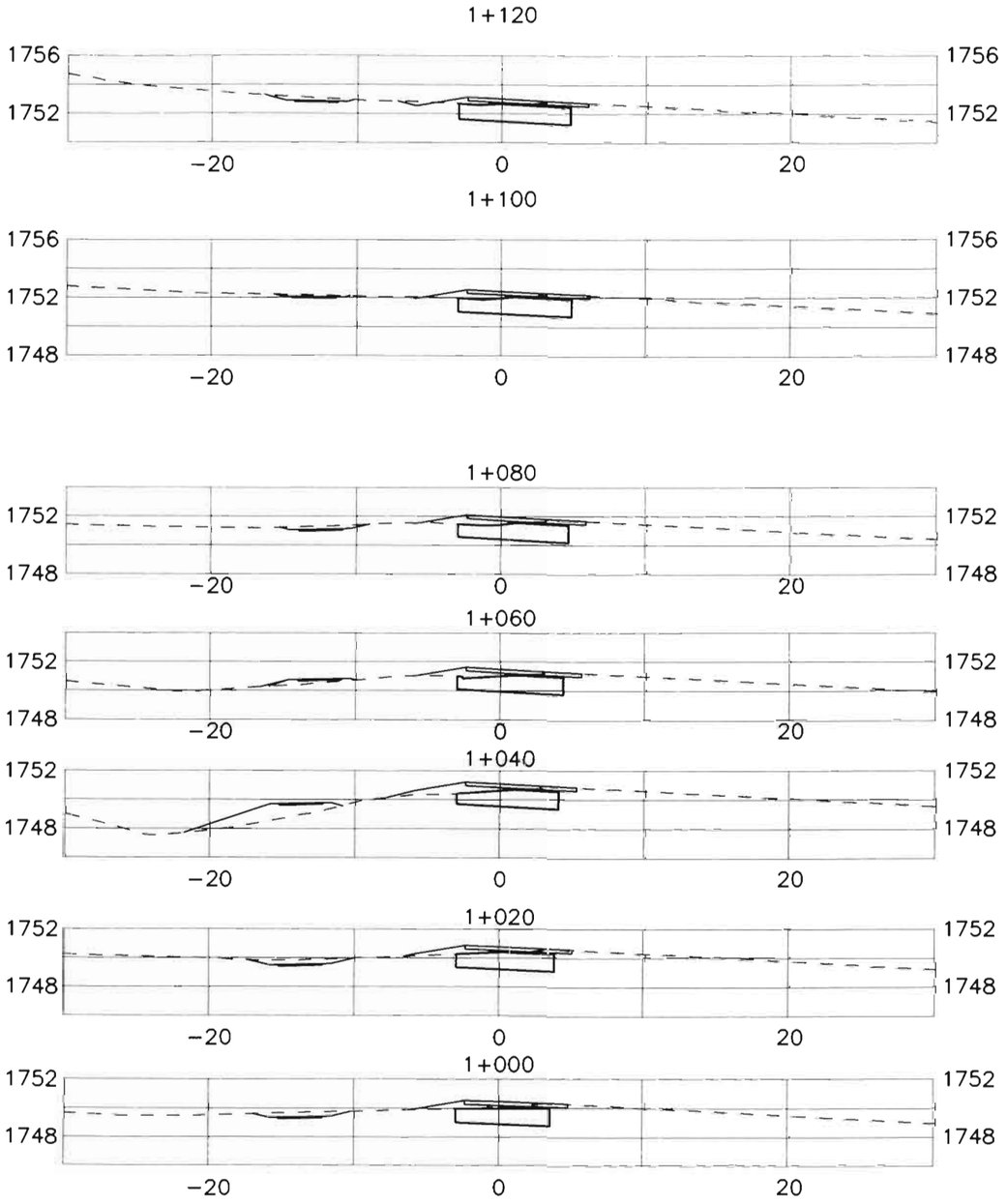

NRAMP

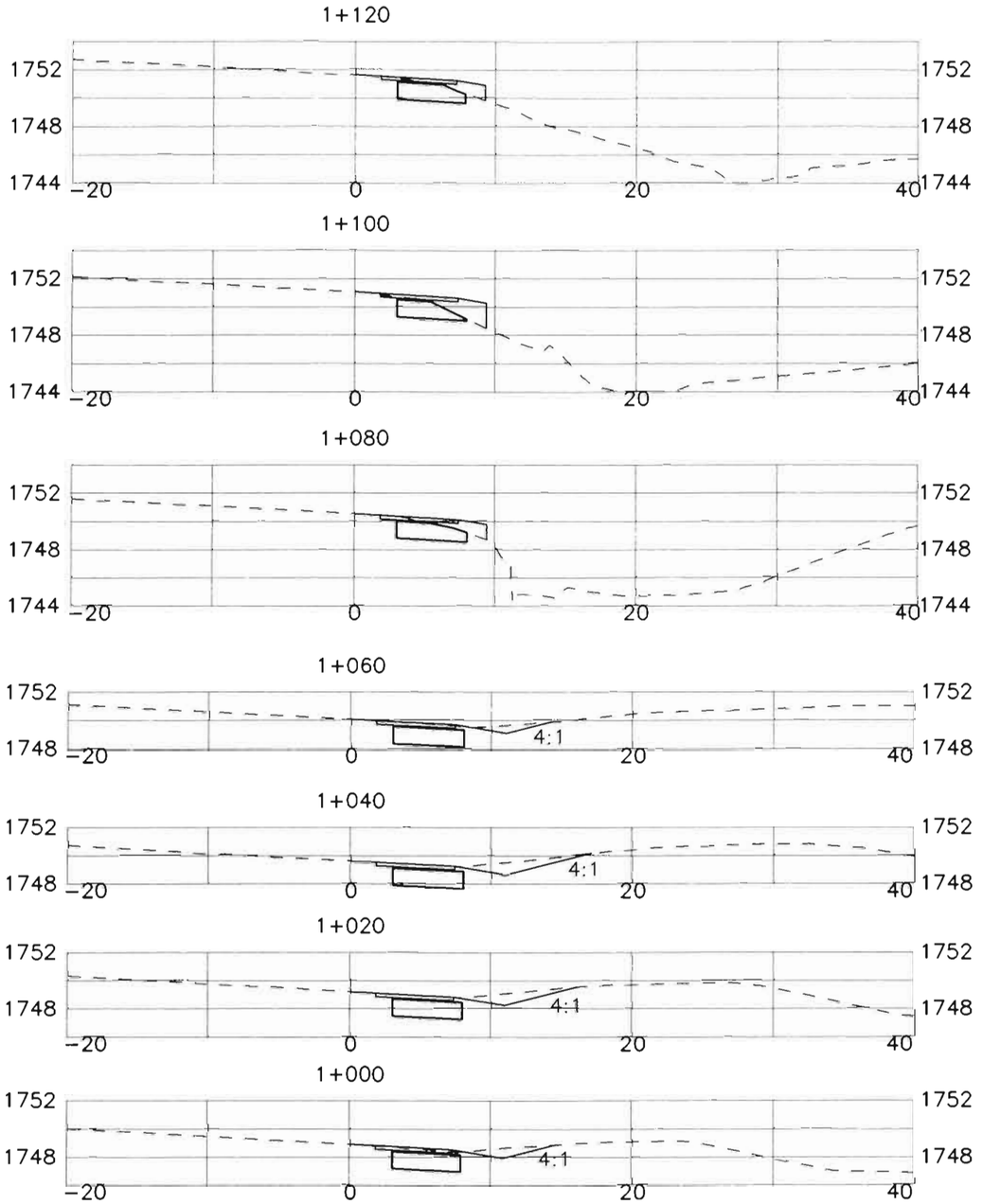

EB C-470

FELSBURG HOLT & ULLEVIG

C-470/YOSEMITE INTERCHANGE

NRAMP 1+000 TO 1+120
EASTBOUND MAINLINE 1+000 TO 1+120

DATE	PROJECT NO.	DESIGNED BY CH / DRAWN BY SS / CHECKED BY DB	SHEET NO. 7 OF 15 SHEETS	DRAWING NO.
JAN 96	95-088			XS-7

ORIGINAL SCALE: 1:200

AS CONSTRUCTED

NO REVISIONS ☐ REVISED ☐ VOID ☐ 11/96

FEDERAL RD REGION NO.	DIVISION	PROJ. NO.	SHEET NO.	TOTAL SHEETS
VIII	COLORADO	CC 4701-082	1007	

REVISIONS		

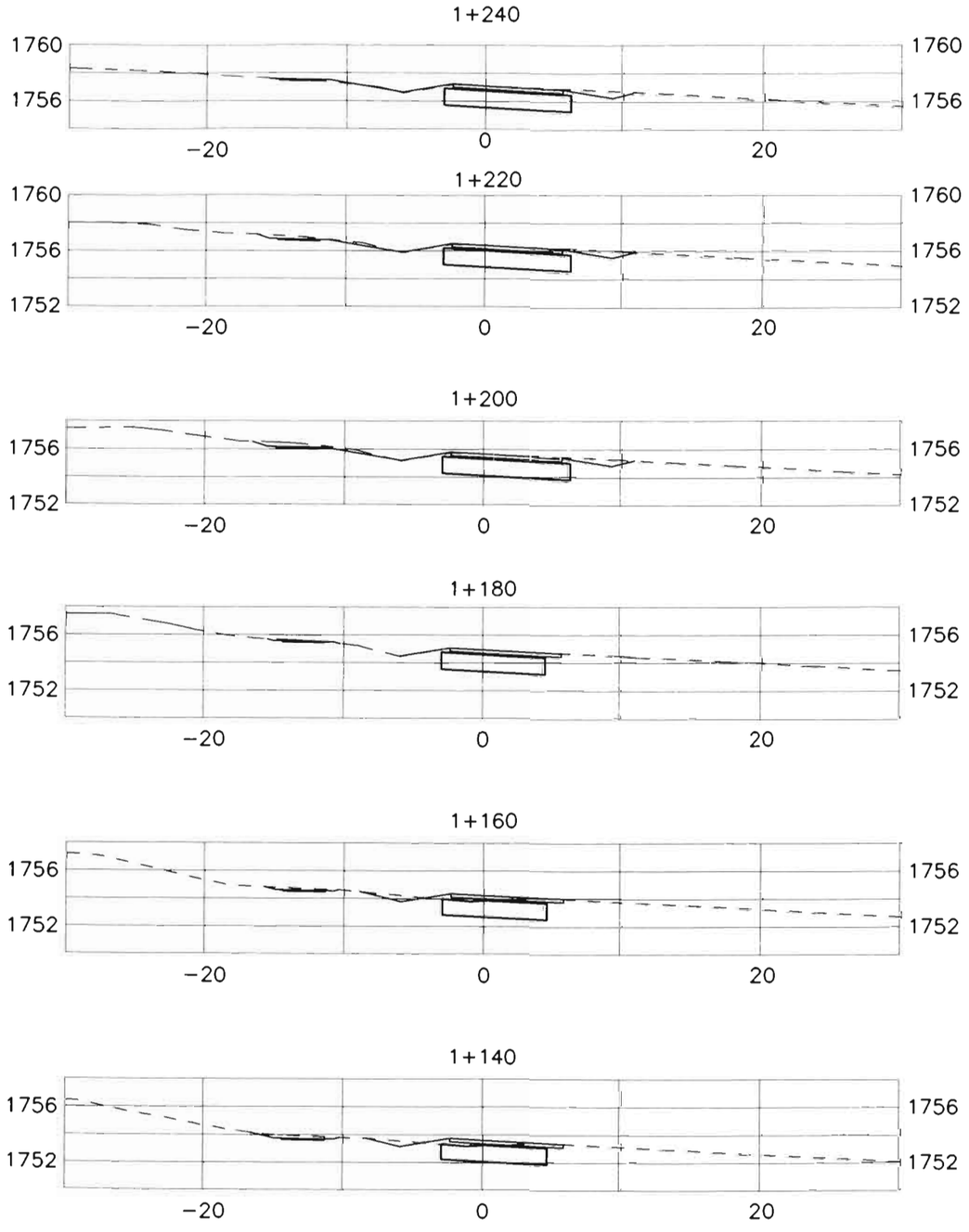

NRAMP

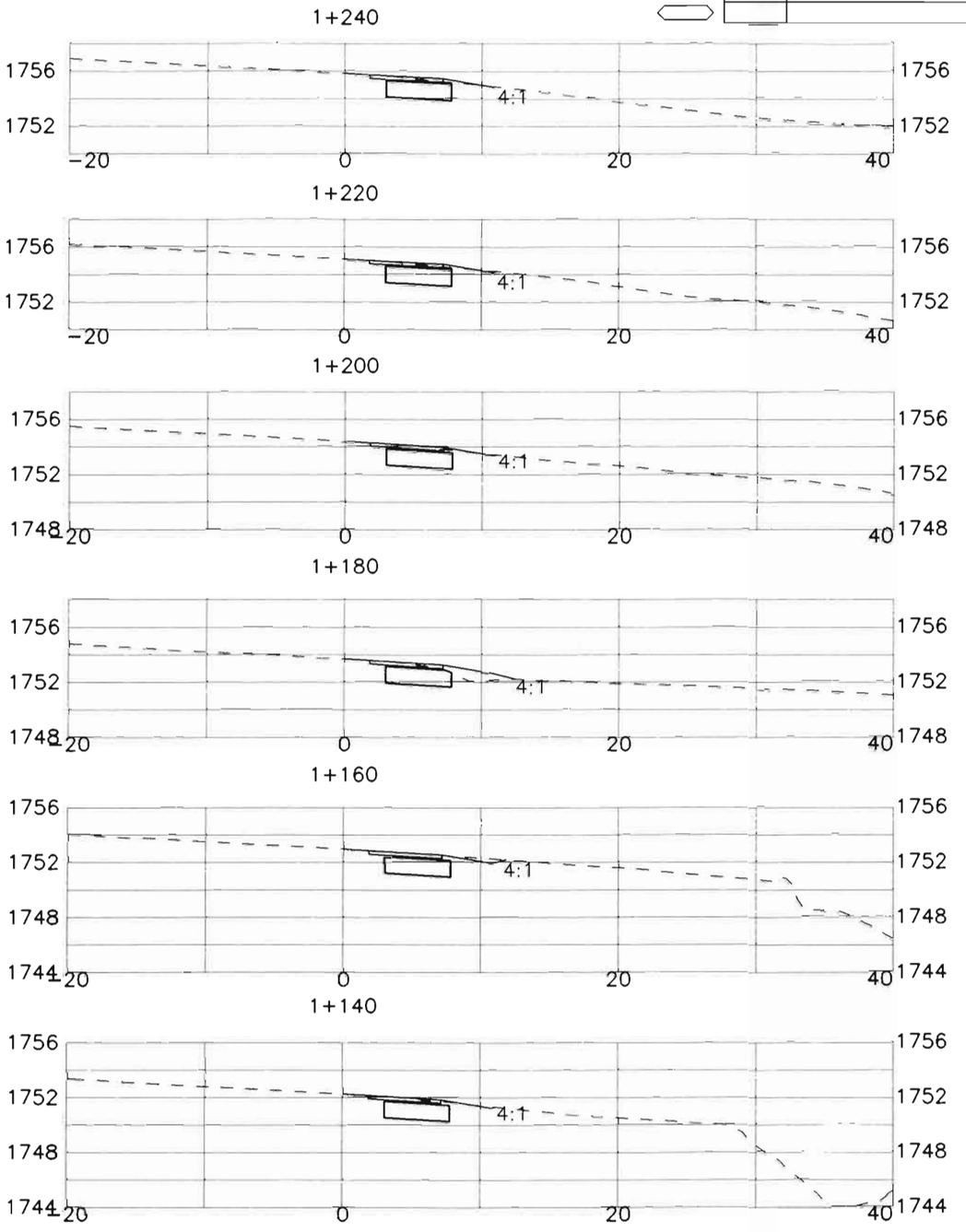

EB C-470

FELSBURG HOLT & ULLEVIG

C-470/YOSEMITE INTERCHANGE

NRAMP 1+140 TO 1+240
EASTBOUND MAINLINE 1+140 TO 1+240

DATE	PROJECT NO	DESIGNED BY	DRAWN BY	CHECKED BY	SHEET NO.	OF	SHEETS	DRAWING NO.
JAN 96	95-088	CH	SS	DB	8	15		XS-8

C:\95088\ACAD\A5088855.dwg, 11, 01/08/96 at 09:59

COMPUTER GENERATED DRAWING DO NOT ALTER MANUALLY

ORIGINAL SCALE: 1:200

AS CONSTRUCTED					
NO REVISIONS ☐	REVISED ☐	VOID 4/3/96			

FEDERAL RD REGION NO.	DIVISION	PROJ. NO.	SHEET NO.	TOTAL SHEETS
VIII	COLORADO	CC 4701-082	1008	

REVISIONS		

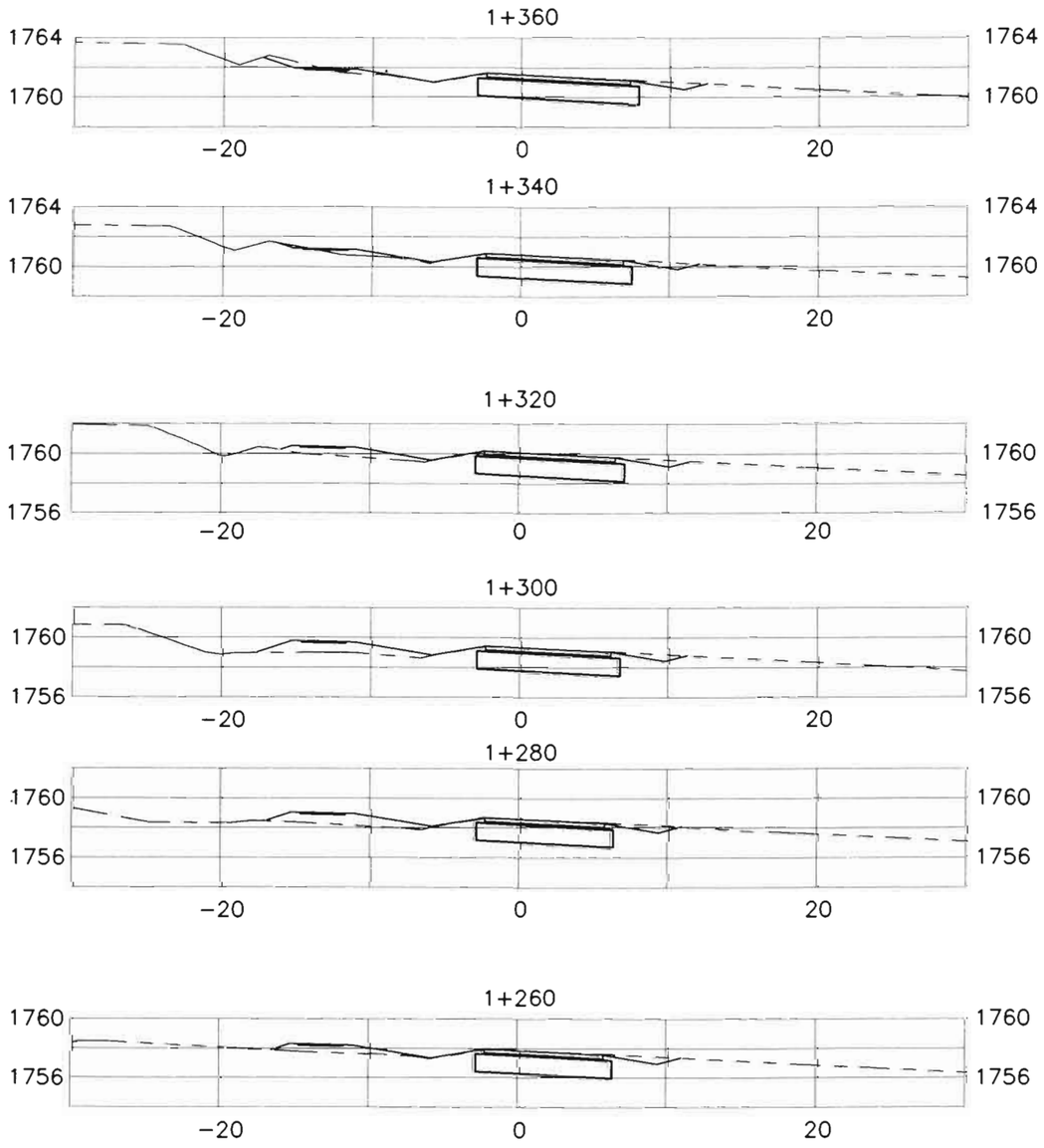

NRAMP

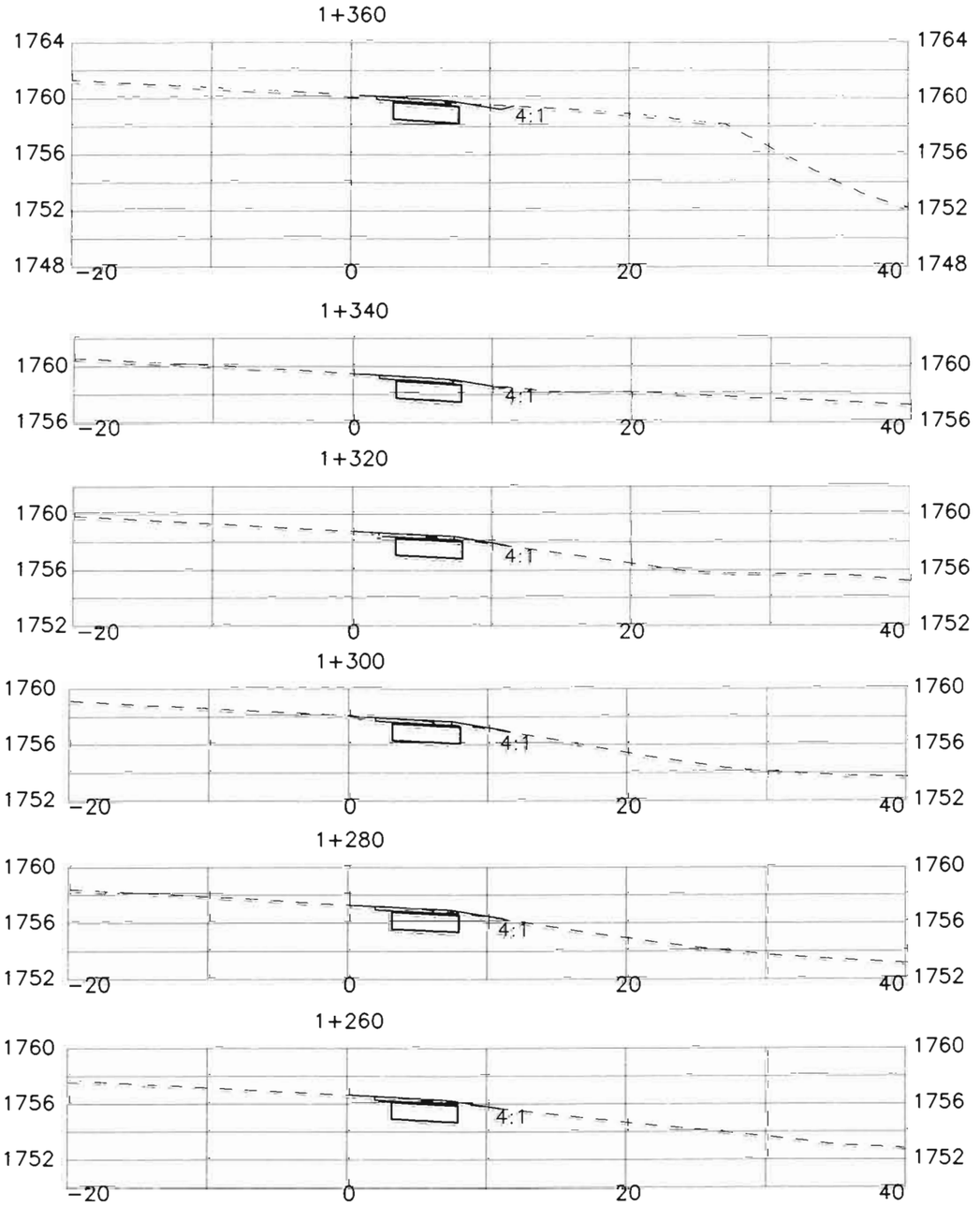

EB C-470

FELSBURG HOLT & ULLEVIG

C-470/YOSEMITE INTERCHANGE
NRAMP 1+260 TO 1+360
EASTBOUND MAINLINE 1+260 TO 1+360

DATE	PROJECT NO.	DESIGNED BY CH	SHEET NO. 9	DRAWING NO.
JAN 96	95-088	DRAWN BY SS	OF 15 SHEETS	XS-9
		CHECKED BY DB		

C:\95088\ACAD\a5088855.dwg, 1.1, 01/08/96 at 09:59
COMPUTER GENERATED DRAWING DO NOT ALTER MANUALLY

ORIGINAL SCALE: 1:200

AS CONSTRUCTED			
NO REVISIONS ☐	REVISED ☐	VOID 11/3/96	

FEDERAL RD REGION NO.	DIVISION	PROJ. NO.	SHEET NO.	TOTAL SHEETS
VIII	COLORADO	CC 4701-082	1009	

REVISIONS		

1+440

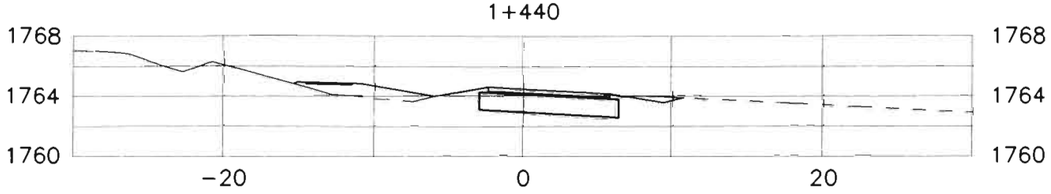

1+420

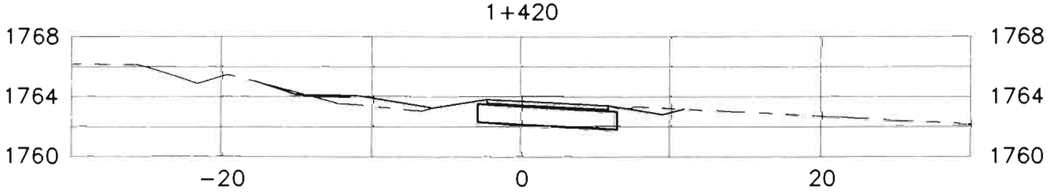

1+400

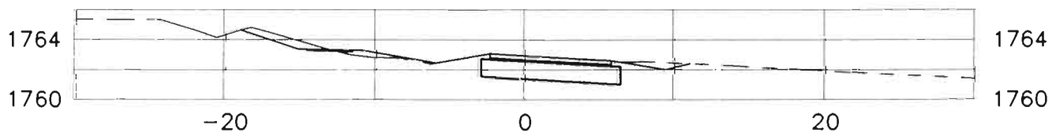

1+380

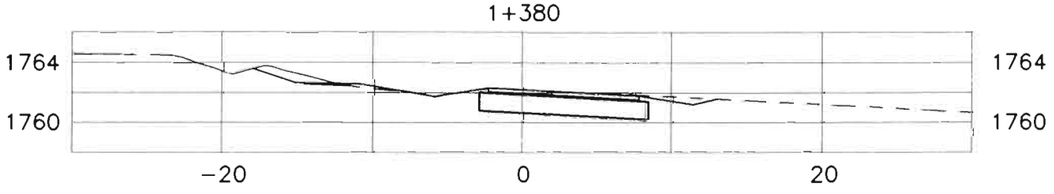

NRAMP

1+440

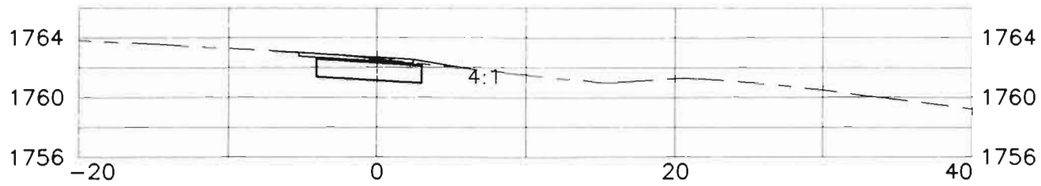

1+420

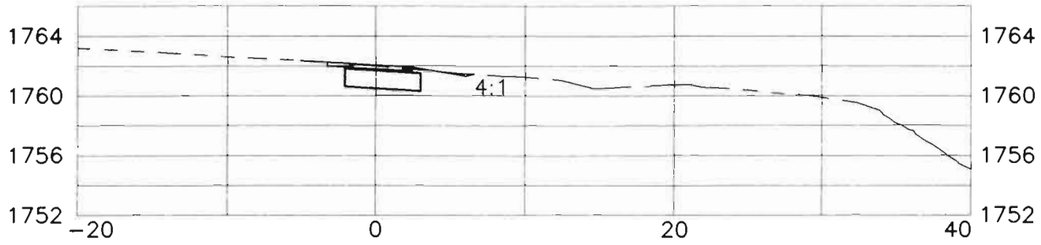

SRAMP 1+400

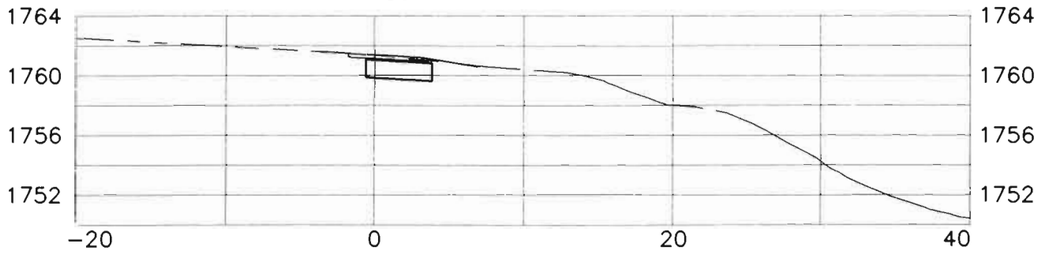

1+380

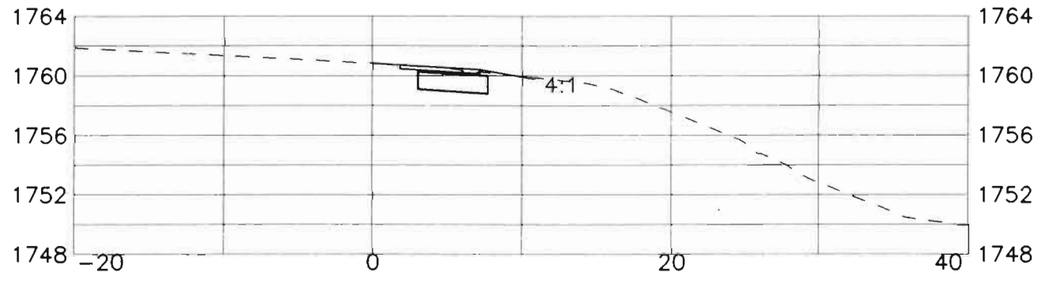

EB C-470

FELSBURG HOLT & ULLEVIG

C-470/YOSEMITE INTERCHANGE

NRAMP 1+380 TO 1+440
EB MAINLINE 1+380, SRAMP 1+400 TO 1+440

DATE	PROJECT NO.	DESIGNED BY CH DRAWN BY SS CHECKED BY DB	SHEET NO. 10 OF 15 SHEETS	DRAWING NO.
JAN 96	95-088			XS-10

C:\95088\ACAD\A5088855.dwg, 1:1, 01/08/96 at 09:59

COMPUTER GENERATED DRAWING DO NOT ALTER MANUALLY

ORIGINAL SCALE: 1:200

AS CONSTRUCTED			
NO REVISIONS ☐	REVISED ☐	VOID ☐ 4/8/96	

FEDERAL RO REGION NO.	DIVISION	PROJ. NO.	SHEET NO.	TOTAL SHEETS
VIII	COLORADO	CC 4701-082	1010	

REVISIONS		

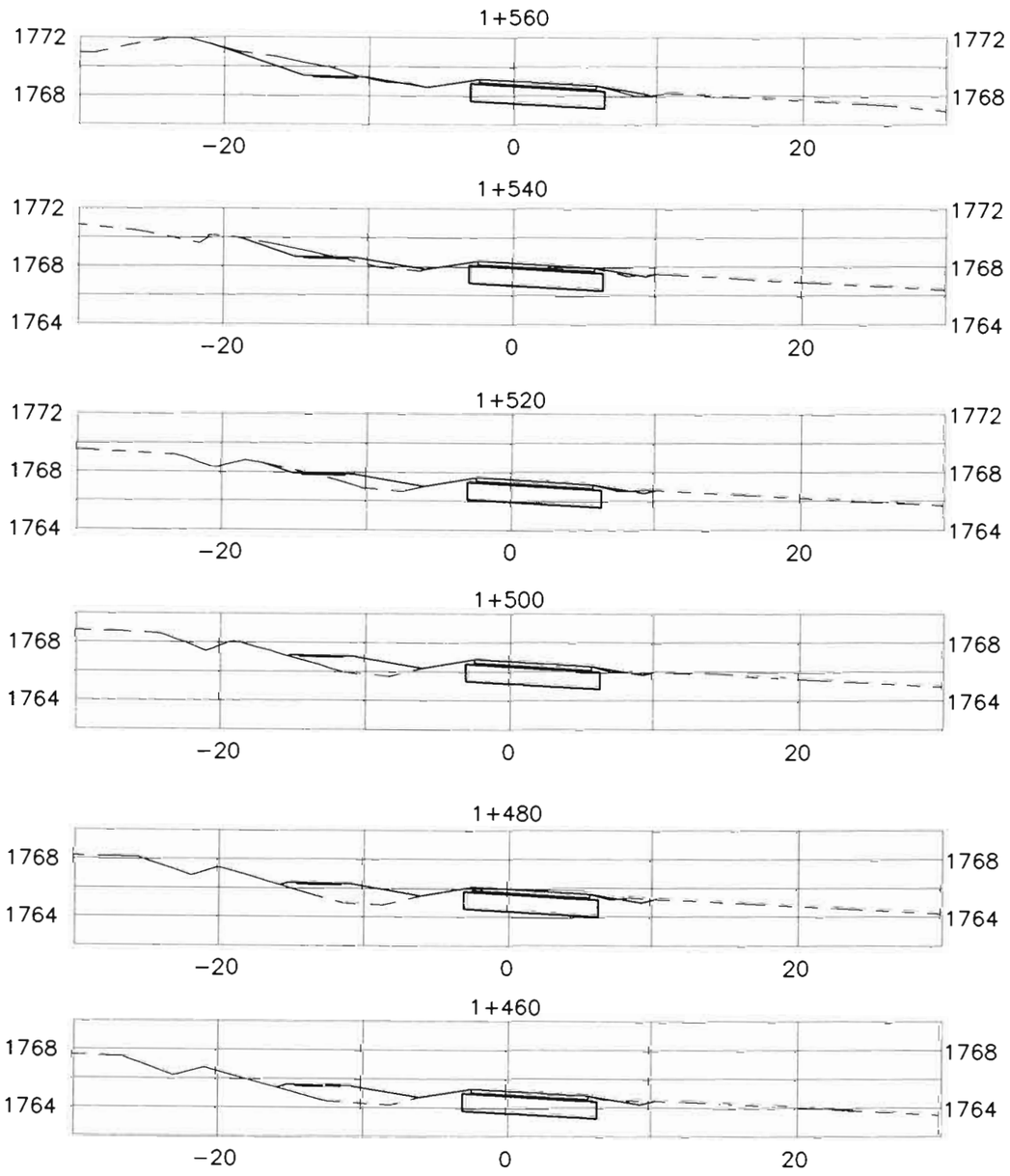

NRAMP

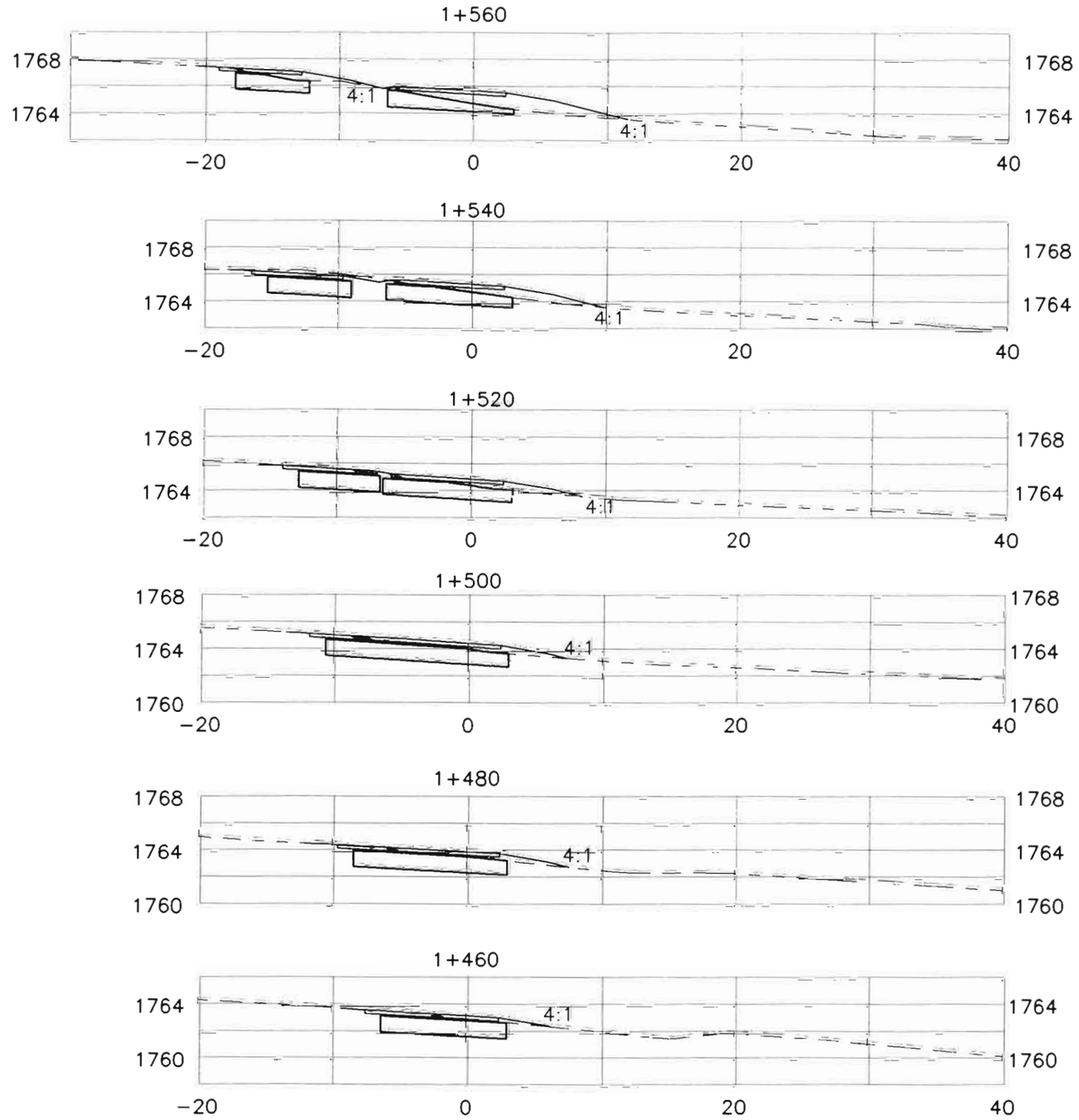

SRAMP

FELSBURG HOLT & ULLEVIG

C-470/YOSEMITE INTERCHANGE

NRAMP 1+460 TO 1+560
SRAMP 1+460 TO 1+560

DATE	PROJECT NO.	DESIGNED BY	DRAWN BY	CHECKED BY	SHEET NO.	OF	SHEETS	DRAWING NO.
JAN 96	95-088	CH	SS	DB	11	15		XS-11

ORIGINAL SCALE: 1:200

AS CONSTRUCTED			
NO REVISIONS ☐	REVISED ☐	VOID 12/3/96	

FEDERAL RD REGION NO.	DIVISION	PROJ. NO.	SHEET NO.	TOTAL SHEETS
VIII	COLORADO	CC 4701-082	10 11	

REVISIONS		

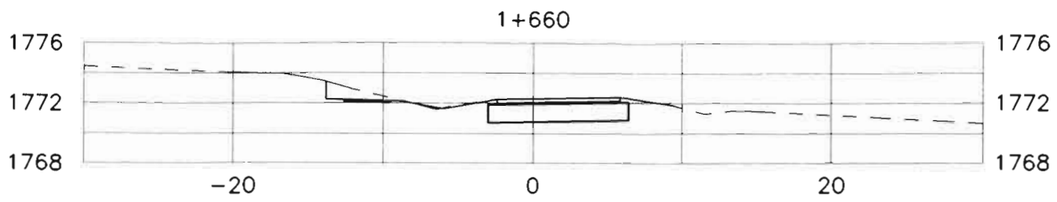

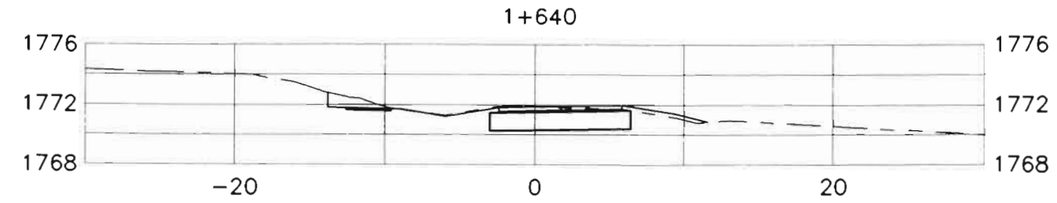

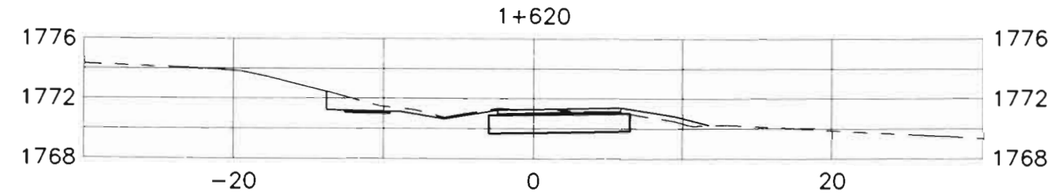

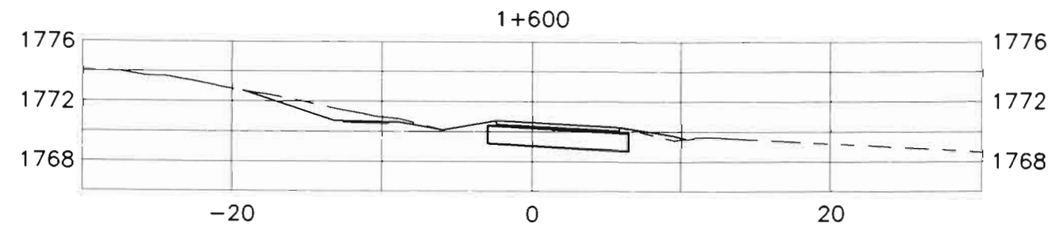

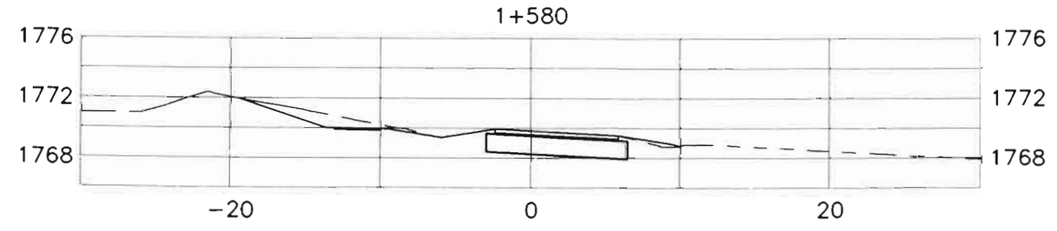

NRAMP

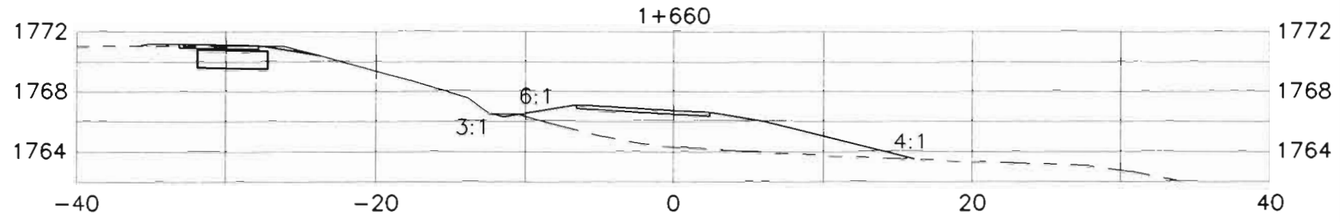

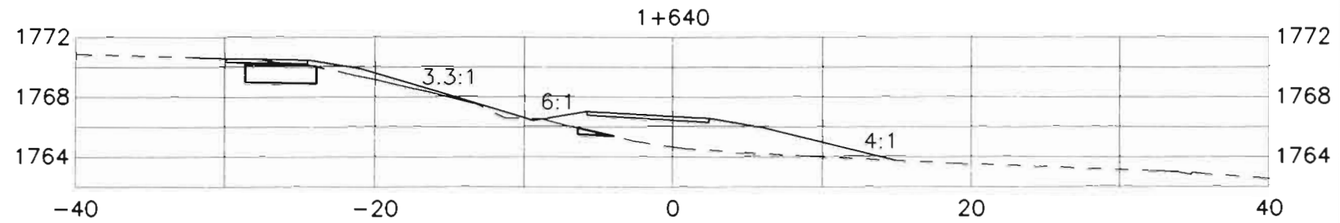

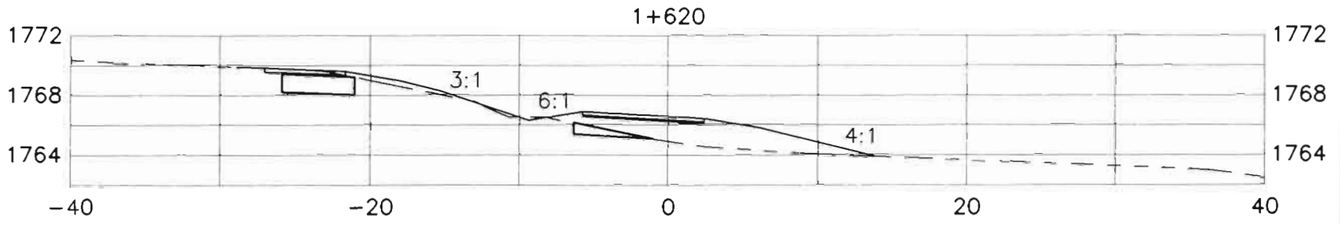

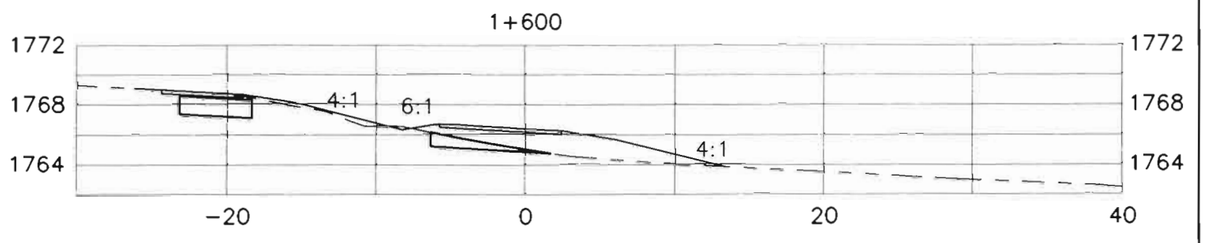

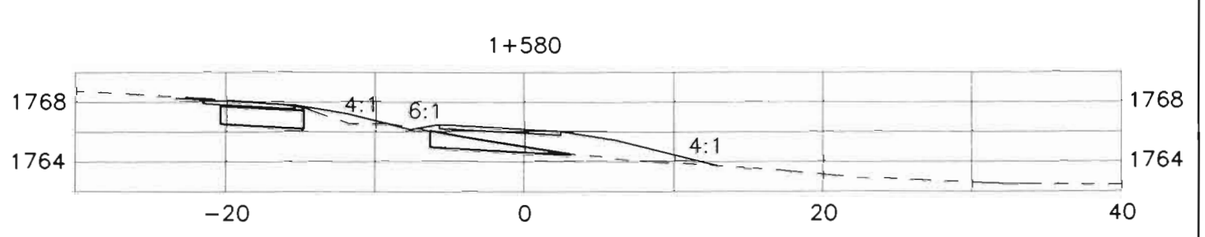

SRAMP

FELSBURG HOLT & ULLEVIG

C-470/YOSEMITE INTERCHANGE

NRAMP 1+580 TO 1+660
SRAMP 1+580 TO 1+660

DATE	PROJECT NO.	DESIGNED BY	DRAWN BY	CHECKED BY	SHEET NO.	OF	SHEETS	DRAWING NO.
JAN 96	95-088	CH	SS	DB	12		15	XS-12

C:\95088\ACAD\A5088855.dwg 1:1 02/08/96 at 11:02
COMPUTER GENERATED DRAWING DO NOT ALTER MANUALLY

AS CONSTRUCTED					
NO REVISIONS ☐	REVISED ☐	VOID ☐ 12/12/96			

FEDERAL RD REGION NO.	DIVISION	PROJ NO.	SHEET NO.	TOTAL SHEETS
VIII	COLORADO	CC 4701-082	1012	

REVISIONS		

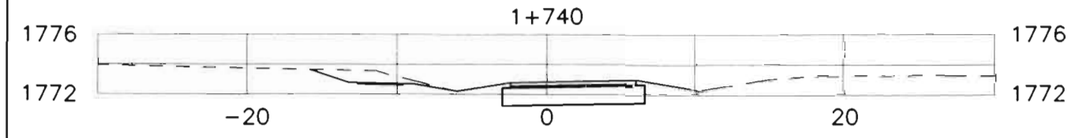

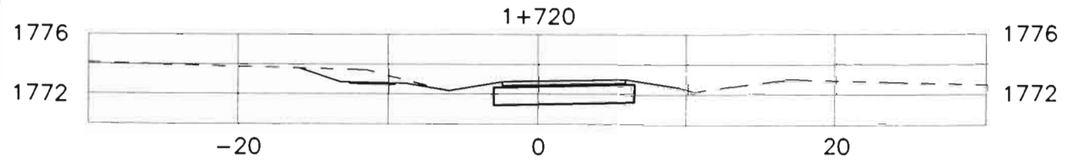

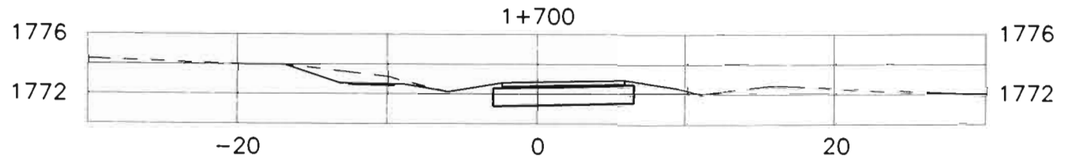

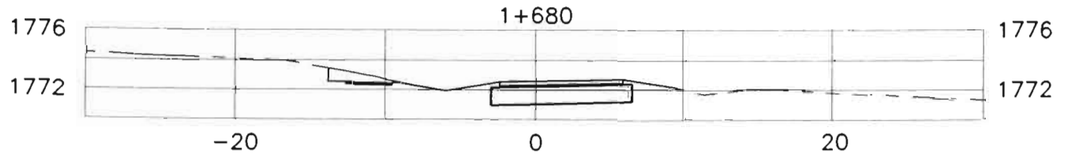

NRAMP

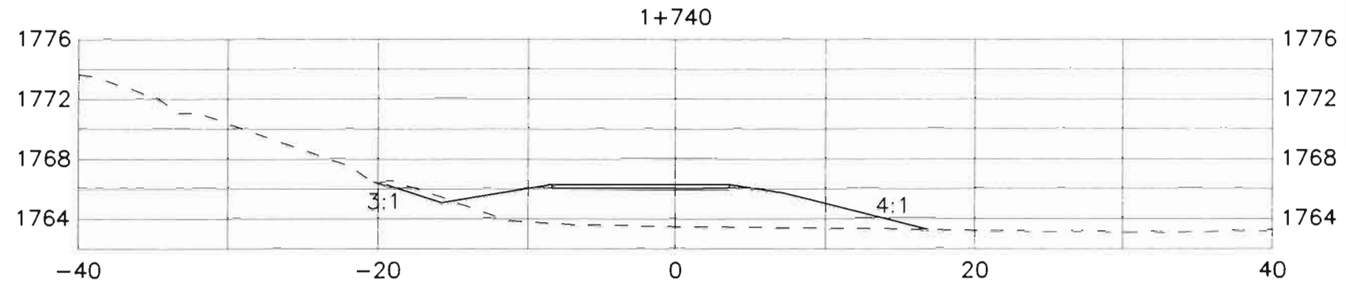

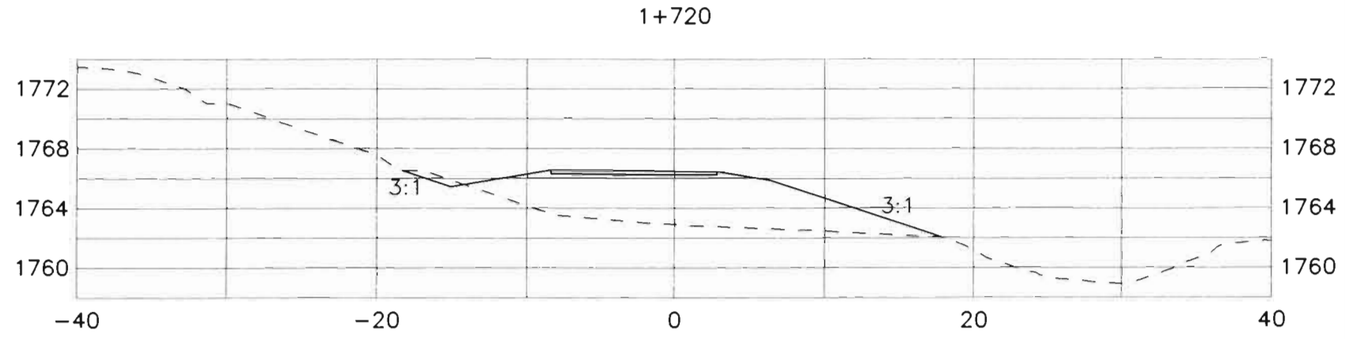

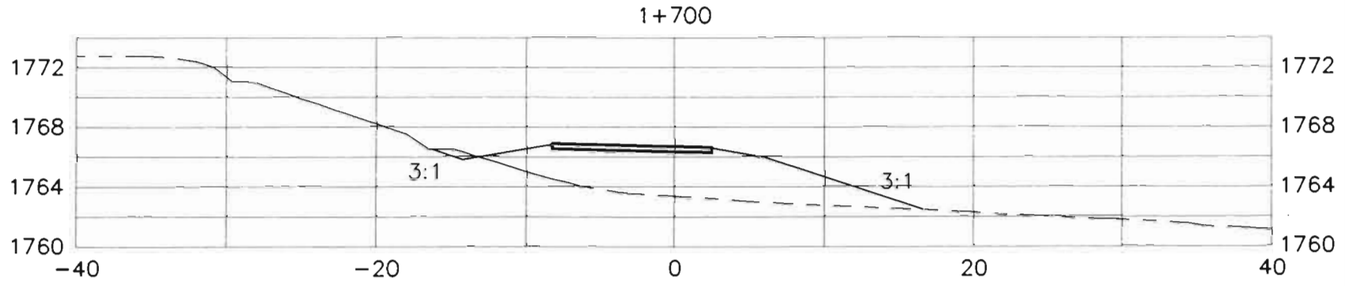

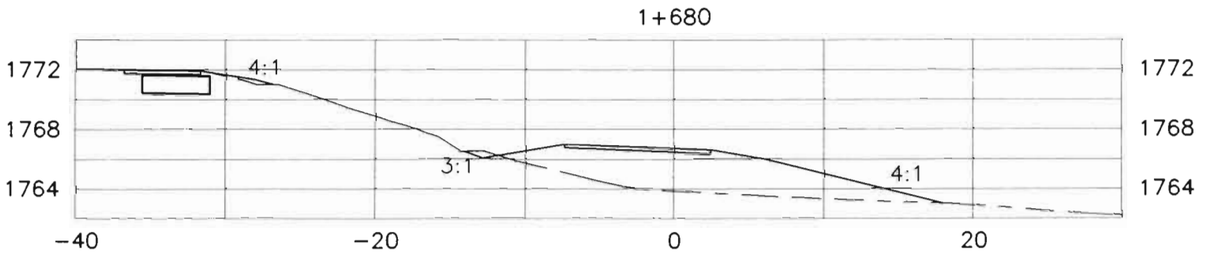

SRAMP

FELSBURG HOLT & ULLEVIG

C-470/YOSEMITE INTERCHANGE

NRAMP 1+680 TO 1+740
SRAMP 1+680 TO 1+740

DATE	PROJECT NO	DESIGNED BY	DRAWN BY	CHECKED BY	SHEET NO.	OF SHEETS	DRAWING NO.
JAN 96	95-088	CH	SS	DB	13	15	XS-13

G:\95088\ACAD\A5088695.dwg, 1:1, 01/08/96 at 09:50

COMPUTER GENERATED DRAWING DO NOT ALTER MANUALLY

ORIGINAL SCALE: 1:200

AS CONSTRUCTED			
NO REVISIONS ☐	REVISED ☐	VOID ☐	12/31/96

FEDERAL RD REGION NO.	DIVISION	PROJ NO	SHEET NO.	TOTAL SHEETS
VIII	COLORADO	CC 4701-082	1013	

REVISIONS		

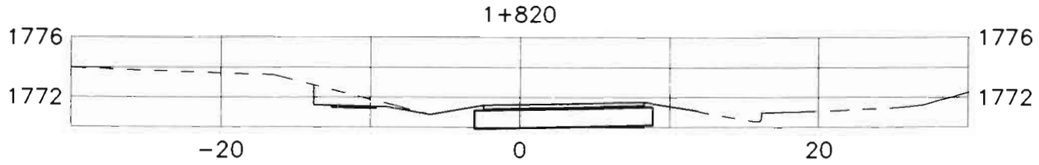

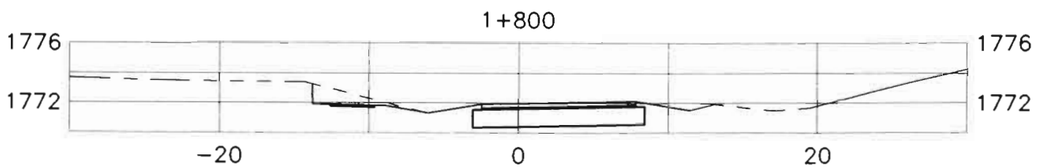

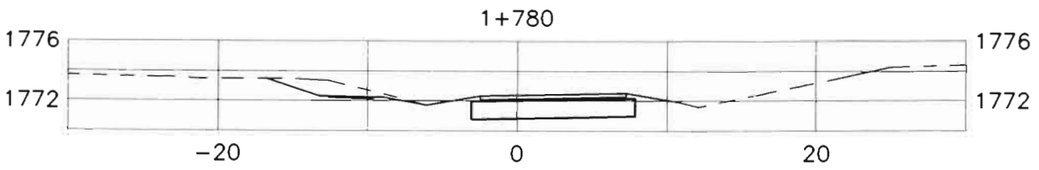

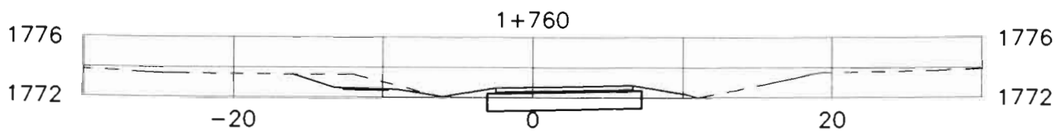

NRAMP

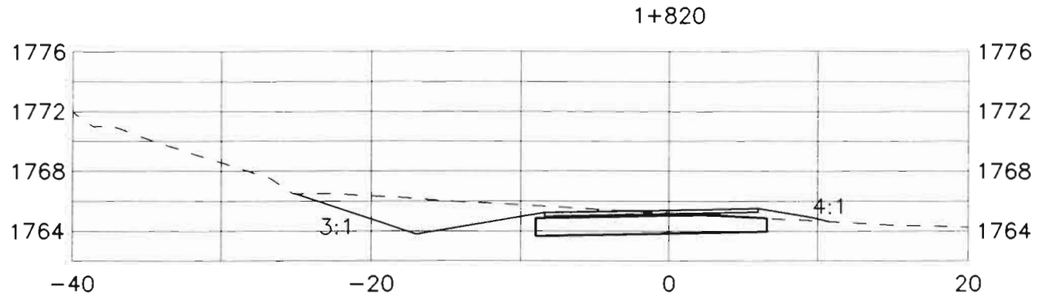

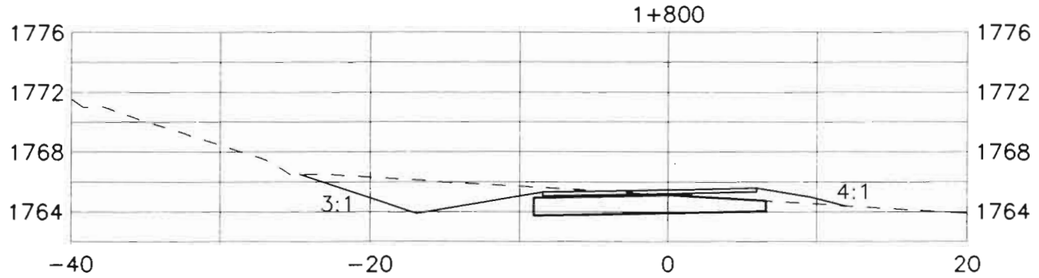

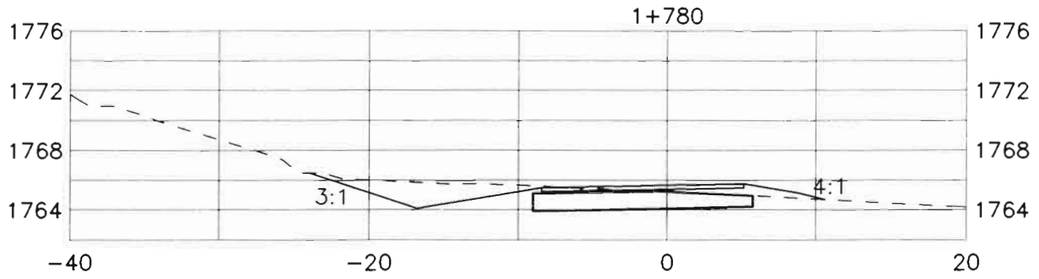

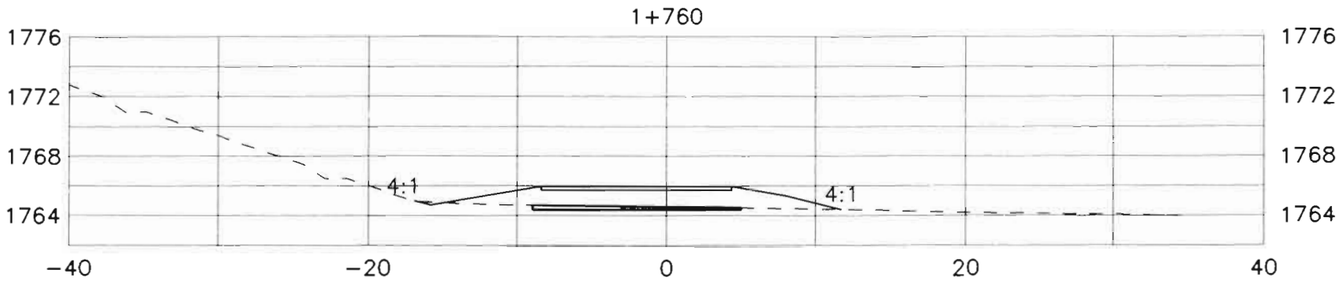

SRAMP

FELSBURG HOLT & ULLEVIG

C-470/YOSEMITE INTERCHANGE

NRAMP 1+760 TO 1+820
SRAMP 1+760 TO 1+820

DATE	PROJECT NO.	DESIGNED BY CH	DRAWN BY SS	CHECKED BY DB	SHEET NO. 14 OF 15 SHEETS	DRAWING NO. XS-14
JAN 96	95-088					

G:\960880\ACAD\ASOBRSEE.dwg 11-01/08/96 11:01 COMPUTER GENERATED DRAWING. DO NOT ALTER MANUALLY

ORIGINAL SCALE: 1:200

AS CONSTRUCTED			
NO REVISIONS ☐	REVISED ☐	VOID 11/31/96	

FEDERAL RD REGION NO.	DIVISION	PROJ. NO	SHEET NO.	TOTAL SHEETS
VIII	COLORADO	CC 4701-082	10.14	

REVISIONS		

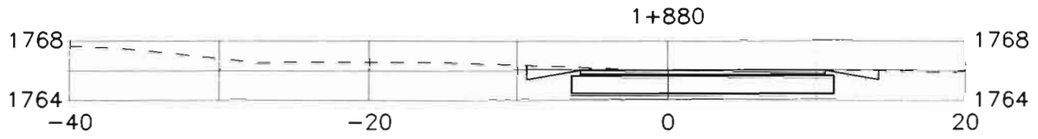

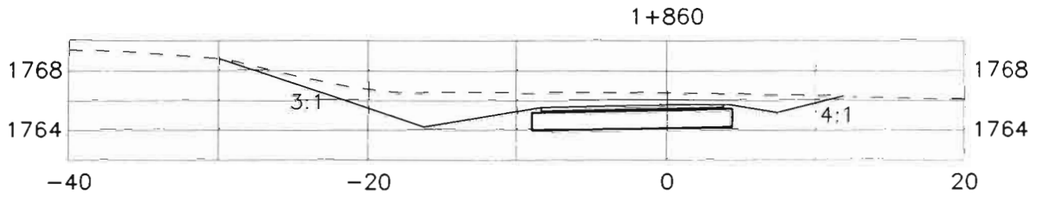

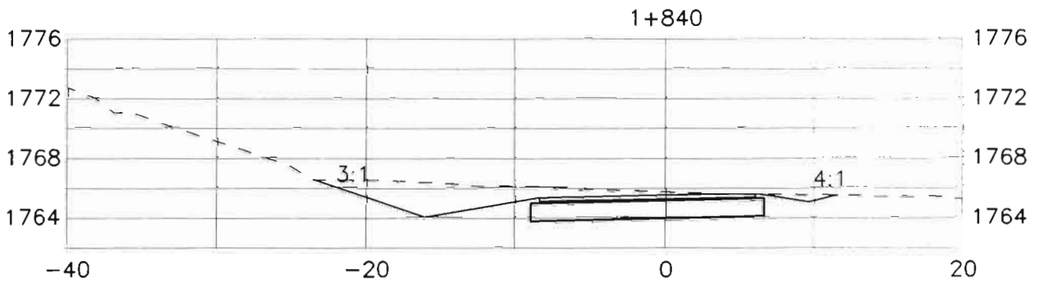

SRAMP

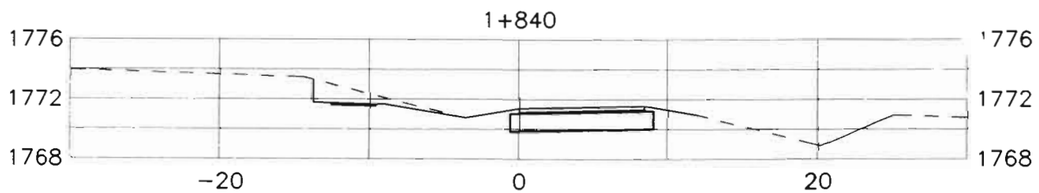

NRAMP

FELSBURG HOLT & ULLEVIG

C-470/YOSEMITE INTERCHANGE

NRAMP 1+840
SRAMP 1+840 TO 1+880

DATE	PROJECT NO.	DESIGNED BY CH DRAWN BY SS CHECKED BY DB	SHEET NO. 15 OF 15 SHEETS	DRAWING NO.
JAN 96	95-088			XS-15

11301

AS CONSTRUCTED

NO REVISIONS ☐ REVISED ☐ VOID ☐

FEDERAL RD REGION NO.	DIVISION	PROJ. NO.	SHEET NO.	TOTAL SHEETS
VIII	COLORADO	CC 4701-082	63	

REVISIONS			

BR 362-023

DETAIL	Initial	Date	Detailed by	Date	QUANTITIES	Initial	Date
	EPL	11-95				EPL	11-95
	DGO	1-96	Checked by		Quantities by	DGO	12-95
					Checked by	EPL	

DESIGN	Initial	Date
Designed by	EPL	11-95
Checked by	DGO	1-96

BENT LINE DESCRIPTION OR FRACTIONAL POINT DESIGNATION	STATION	OFFSET	ELEVATION
OUTSIDE LEFT RAILING			
END WALL 1	0+243.7117	−7.7330	1758.2536
END WING 1	0+252.2461	−7.7330	1758.1171
BF ABUT 1	0+254.1511	−7.7330	1758.0866
CL BRG A1	0+254.5321	−7.7330	1758.0805
F-1	0+256.6606	−7.7330	1758.0464
F-2	0+258.7891	−7.7330	1758.0124
F-3	0+260.9176	−7.7330	1757.9783
F-4	0+263.0461	−7.7330	1757.9443
F-5	0+265.1746	−7.7330	1757.9102
F-6	0+267.3031	−7.7330	1757.8762
F-7	0+269.4316	−7.7330	1757.8421
F-8	0+271.5601	−7.7330	1757.8080
F-9	0+273.6886	−7.7330	1757.7740
CL BRG 2BK	0+275.8171	−7.7330	1757.7399
CL PIER 2	0+276.0201	−7.7330	1757.7367
CL BRG 2AH	0+276.2231	−7.7330	1757.7334
F-1	0+278.2297	−7.7330	1757.7013
F-2	0+280.2363	−7.7330	1757.6692
F-3	0+282.2429	−7.7330	1757.6371
F-4	0+284.2495	−7.7330	1757.6050
F-5	0+286.2561	−7.7330	1757.5729
F-6	0+288.2627	−7.7330	1757.5408
F-7	0+290.2693	−7.7330	1757.5087
F-8	0+292.2759	−7.7330	1757.4766
F-9	0+294.2825	−7.7330	1757.4445
CL BRG A3	0+296.2891	−7.7330	1757.4124
BF ABUT 3	0+296.6701	−7.7330	1757.4063
END WING 3	0+298.2704	−7.7330	1757.3807
END WALL 3	0+243.8055	−7.7330	1758.2441
LEFT EDGE DECK SLAB			
BF ABUT 1	0+254.1482	−7.5040	1758.0901
CL BRG A1	0+254.5292	−7.5040	1758.0840
F-1	0+256.6577	−7.5040	1758.0499
F-2	0+258.7862	−7.5040	1758.0159
F-3	0+260.9147	−7.5040	1757.9818
F-4	0+263.0432	−7.5040	1757.9477
F-5	0+265.1717	−7.5040	1757.9137
F-6	0+267.3002	−7.5040	1757.8796
F-7	0+269.4287	−7.5040	1757.8456
F-8	0+271.5572	−7.5040	1757.8115
F-9	0+273.6857	−7.5040	1757.7775
CL BRG 2BK	0+275.8142	−7.5040	1757.7434
CL PIER 2	0+276.0172	−7.5040	1757.7402
CL BRG 2AH	0+276.2202	−7.5040	1757.7369
F-1	0+278.2268	−7.5040	1757.7048
F-2	0+280.2334	−7.5040	1757.6727
F-3	0+282.2400	−7.5040	1757.6406
F-4	0+284.2466	−7.5040	1757.6085
F-5	0+286.2532	−7.5040	1757.5764
F-6	0+288.2598	−7.5040	1757.5443
F-7	0+290.2664	−7.5040	1757.5122
F-8	0+292.2730	−7.5040	1757.4801
F-9	0+294.2796	−7.5040	1757.4480
CL BRG A3	0+296.2862	−7.5040	1757.4159
BF ABUT 3	0+296.6672	−7.5040	1757.4098

BENT LINE DESCRIPTION OR FRACTIONAL POINT DESIGNATION	STATION	OFFSET	ELEVATION
OUTSIDE LEFT WING			
BF ABUT 1	0+254.1414	−6.9710	1758.0982
CL BRG A1	0+254.5224	−6.9710	1758.0921
CL BRG A3	0+296.2794	−6.9710	1757.4240
BF ABUT 3	0+296.6605	−6.9710	1757.4179
INSIDE LEFT WING			
END AP SLB	0+249.8704	−6.6660	1758.1711
BF ABUT 1	0+254.1376	−6.6660	1758.1028
CL BRG A1	0+254.5186	−6.6660	1758.0967
CL BRG A3	0+296.2756	−6.6660	1757.4286
BF ABUT 3	0+296.6566	−6.6660	1757.4225
END AP SLB	0+300.9241	−6.6660	1757.3542
CL GIRDER W1			
BF ABUT 1	0+254.1347	−6.4380	1758.1063
CL BRG A1	0+254.5157	−6.4380	1758.1002
F-1	0+256.6442	−6.4380	1758.0661
F-2	0+258.7727	−6.4380	1758.0321
F-3	0+260.9012	−6.4380	1757.9980
F-4	0+263.0297	−6.4380	1757.9640
F-5	0+265.1582	−6.4380	1757.9299
F-6	0+267.2867	−6.4380	1757.8958
F-7	0+269.4152	−6.4380	1757.8618
F-8	0+271.5436	−6.4380	1757.8277
F-9	0+273.6721	−6.4380	1757.7937
CL BRG 2BK	0+275.8006	−6.4380	1757.7596
CL PIER 2	0+276.0037	−6.4380	1757.7564
CL BRG 2AH	0+276.2067	−6.4380	1757.7531
F-1	0+278.2133	−6.4380	1757.7210
F-2	0+280.2199	−6.4380	1757.6889
F-3	0+282.2265	−6.4380	1757.6568
F-4	0+284.2331	−6.4380	1757.6247
F-5	0+286.2397	−6.4380	1757.5926
F-6	0+288.2463	−6.4380	1757.5605
F-7	0+290.2529	−6.4380	1757.5284
F-8	0+292.2595	−6.4380	1757.4963
F-9	0+294.2661	−6.4380	1757.4642
CL BRG A3	0+296.2727	−6.4380	1757.4321
BF ABUT 3	0+296.6537	−6.4380	1757.4260

BENT LINE DESCRIPTION OR FRACTIONAL POINT DESIGNATION	STATION	OFFSET	ELEVATION
CL GIRDER W2			
BF ABUT 1	0+254.1083	−4.3620	1758.1378
CL BRG A1	0+254.4893	−4.3620	1758.1317
F-1	0+256.6178	−4.3620	1758.0977
F-2	0+258.7463	−4.3620	1758.0636
F-3	0+260.8748	−4.3620	1758.0296
F-4	0+263.0033	−4.3620	1757.9955
F-5	0+265.1318	−4.3620	1757.9615
F-6	0+267.2603	−4.3620	1757.9274
F-7	0+269.3888	−4.3620	1757.8933
F-8	0+271.5173	−4.3620	1757.8593
F-9	0+273.6458	−4.3620	1757.8252
CL BRG 2BK	0+275.7743	−4.3620	1757.7912
CL PIER 2	0+275.9773	−4.3620	1757.7879
CL BRG 2AH	0+276.1803	−4.3620	1757.7847
F-1	0+278.1869	−4.3620	1757.7526
F-2	0+280.1935	−4.3620	1757.7205
F-3	0+282.2001	−4.3620	1757.6884
F-4	0+284.2067	−4.3620	1757.6563
F-5	0+286.2133	−4.3620	1757.6242
F-6	0+288.2199	−4.3620	1757.5921
F-7	0+290.2265	−4.3620	1757.5599
F-8	0+292.2331	−4.3620	1757.5278
F-9	0+294.2397	−4.3620	1757.4957
CL BRG A3	0+296.2463	−4.3620	1757.4636
BF ABUT 3	0+296.6274	−4.3620	1757.4575
RT EDGE WIDENED SLAB			
BF ABUT 1	0+254.0846	−2.4910	1758.1663
CL BRG A1	0+254.4656	−2.4910	1758.1602
F-1	0+256.5941	−2.4910	1758.1261
F-2	0+258.7226	−2.4910	1758.0921
F-3	0+260.8511	−2.4910	1758.0580
F-4	0+262.9796	−2.4910	1758.0240
F-5	0+265.1081	−2.4910	1757.9899
F-6	0+267.2366	−2.4910	1757.9558
F-7	0+269.3651	−2.4910	1757.9218
F-8	0+271.4936	−2.4910	1757.8877
F-9	0+273.6221	−2.4910	1757.8537
CL BRG 2BK	0+275.7506	−2.4910	1757.8196
CL PIER 2	0+275.9536	−2.4910	1757.8164
CL BRG 2AH	0+276.1566	−2.4910	1757.8131
F-1	0+278.1632	−2.4910	1757.7810
F-2	0+280.1698	−2.4910	1757.7489
F-3	0+282.1764	−2.4910	1757.7168
F-4	0+284.1830	−2.4910	1757.6847
F-5	0+286.1896	−2.4910	1757.6526
F-6	0+288.1962	−2.4910	1757.6205
F-7	0+290.2028	−2.4910	1757.5884
F-8	0+292.2094	−2.4910	1757.5563
F-9	0+294.2160	−2.4910	1757.5242
CL BRG A3	0+296.2226	−2.4910	1757.4921
BF ABUT 3	0+296.6036	−2.4910	1757.4860

BENT LINE DESCRIPTION OR FRACTIONAL POINT DESIGNATION	STATION	OFFSET	ELEVATION
HORIZ. CONTROL LINE			
BF ABUT 1	0+254.0530	0.0000	1758.2042
CL BRG A1	0+254.4340	0.0000	1758.1981
F-1	0+256.5625	0.0000	1758.1640
F-2	0+258.6910	0.0000	1758.1299
F-3	0+260.8195	0.0000	1758.0959
F-4	0+262.9480	0.0000	1758.0618
F-5	0+265.0765	0.0000	1758.0278
F-6	0+267.2050	0.0000	1757.9937
F-7	0+269.3335	0.0000	1757.9597
F-8	0+271.4620	0.0000	1757.9256
F-9	0+273.5905	0.0000	1757.8916
CL BRG 2BK	0+275.7190	0.0000	1757.8575
CL PIER 2	0+275.9220	0.0000	1757.8542
CL BRG 2AH	0+276.1250	0.0000	1757.8510
F-1	0+278.1316	0.0000	1757.8189
F-2	0+280.1382	0.0000	1757.7868
F-3	0+282.1448	0.0000	1757.7547
F-4	0+284.1514	0.0000	1757.7226
F-5	0+286.1580	0.0000	1757.6905
F-6	0+288.1646	0.0000	1757.6584
F-7	0+290.1712	0.0000	1757.6263
F-8	0+292.1778	0.0000	1757.5942
F-9	0+294.1844	0.0000	1757.5620
CL BRG A3	0+296.1910	0.0000	1757.5299
BF ABUT 3	0+296.5720	0.0000	1757.5238

THESE STATIONS, COORDINATES, OFFSETS, AND LENGTHS DEFINE THE LAYOUT OF THE STRUCTURE IN A TWO DIMENSIONAL HORIZONTAL PLANE. ELEVATIONS DEFINE THE FINAL GRADE OF THE FINISHED CONCRETE DECK. FABRICATION OF STRUCTURAL COMPONENTS THRU THE DIRECT USE OF THIS INFORMATION IS NOT INTENDED OR ADVISABLE.

NOTE: ELEVATIONS ARE AT TOP OF CONCRETE DECK 50 MILLIMETERS (mm) BELOW FINISHED GRADE.

FELSBURG HOLT & ULLEVIG

COLORADO DEPARTMENT OF TRANSPORTATION

WB SH470 OVER ACRES GREEN DR.
BRIDGE WIDENING
DECK ELEVATIONS

Designer E. LARSEN	Structure Numbers	F-17-HQ
Detailer E. LARSEN		
Drawing Number B21 of 22 Drawings		

Revision Dates (Preliminary Stage Only)

COMPUTER GENERATED DRAWING DO NOT ALTER MANUALLY

AS CONSTRUCTED			
NO REVISIONS ☐	REVISED ☐	VOID ☐	

FEDERAL RD REGION NO.	DIVISION	PROJ. NO	SHEET NO.	TOTAL SHEETS
VIII	COLORADO	CC 4701-082	64	

REVISIONS		

ROADWAY APPROACHES

ELEVATIONS (m) ARE AT FINISHED GRADE

STATION	OFFSET (m) -7.2	-3.6	0.0
0+210	1758.8510	1758.9050	1758.9590
0+220	1758.6910	1758.7450	1758.7990
0+230	1758.5310	1758.5850	1758.6390
0+240	1758.3710	1758.4250	1758.4790
0+250	1758.2110	1758.2650	1758.3190
0+260	1758.0510	1758.1050	1758.1590
0+270	1757.8910	1757.9450	1757.9990
0+280	1757.7310	1757.7850	1757.8390
0+290	1757.5710	1757.6250	1757.6790
0+300	1757.4110	1757.4650	1757.5190
0+310	1757.2510	1757.3050	1757.3590
0+320	1757.0910	1757.1450	1757.1990
0+330	1756.9310	1756.9850	1757.0390
0+340	1756.7710	1756.8250	1756.8790

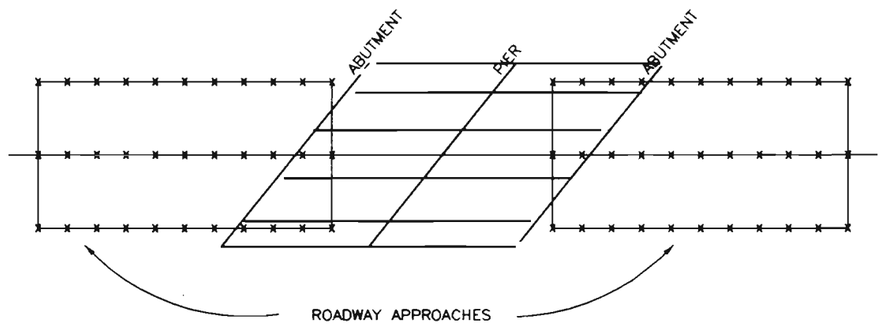

* TANGENT ALIGNMENT

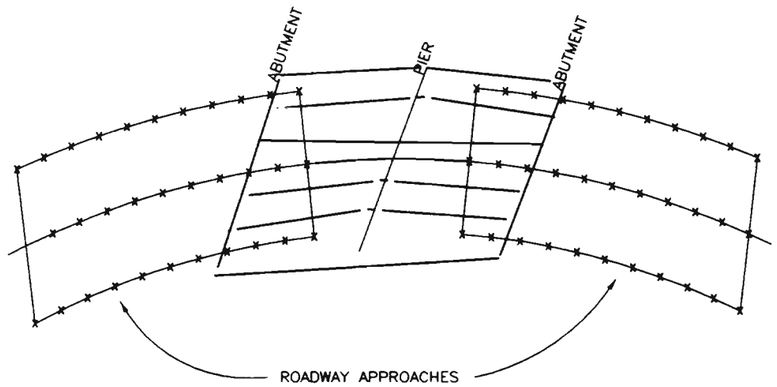

* HORIZONTAL CURVE ALIGNMENT

* THESE DRAWINGS ARE SCHEMATICS ONLY AND DO NOT NECESSARILY REFLECT THE ACTUAL BRIDGE LAYOUT.

DESIGN			DETAIL		
Designed by	EPL	Date 11-95	Detailed by	DDG	Date 11-95
Checked by	DDG	Date 1-96	Checked by	EPL	Date 12-95
			Quantities by	DDG	
			Checked by	EPL	
			QUANTITIES		

COLORADO DEPARTMENT OF TRANSPORTATION

WB SH470 OVER ACRES GREEN DR.
BRIDGE WIDENING
ROADWAY APPROACHES

Designer E. LARSEN	Structure Numbers	F-17-HO
Detailer E. LARSEN		
Drawing Number B22 of 22 Drawings		

FELSBURG HOLT & ULLEVIG

Revision Dates (Preliminary Stage Only)							

D:\95088\ACAD\A50882N2.dwg, 11, 02/19/96 at 12:47 COMPUTER GENERATED DRAWING. DO NOT ALTER MANUALLY

AS CONSTRUCTED			
NO REVISIONS ☐	REVISED ☐	VOID ☐	

FEDERAL RD REGION NO.	DIVISION	PROJ. NO.	SHEET NO.	TOTAL SHEETS
VIII	COLORADO	CC 4701-082	65	

REVISIONS		

BEGIN PROJECT CC 4701-082
STA. 0+092 WB CONTROL LINE =
1320+98.75 PROJ. IXFU 470-1(17)

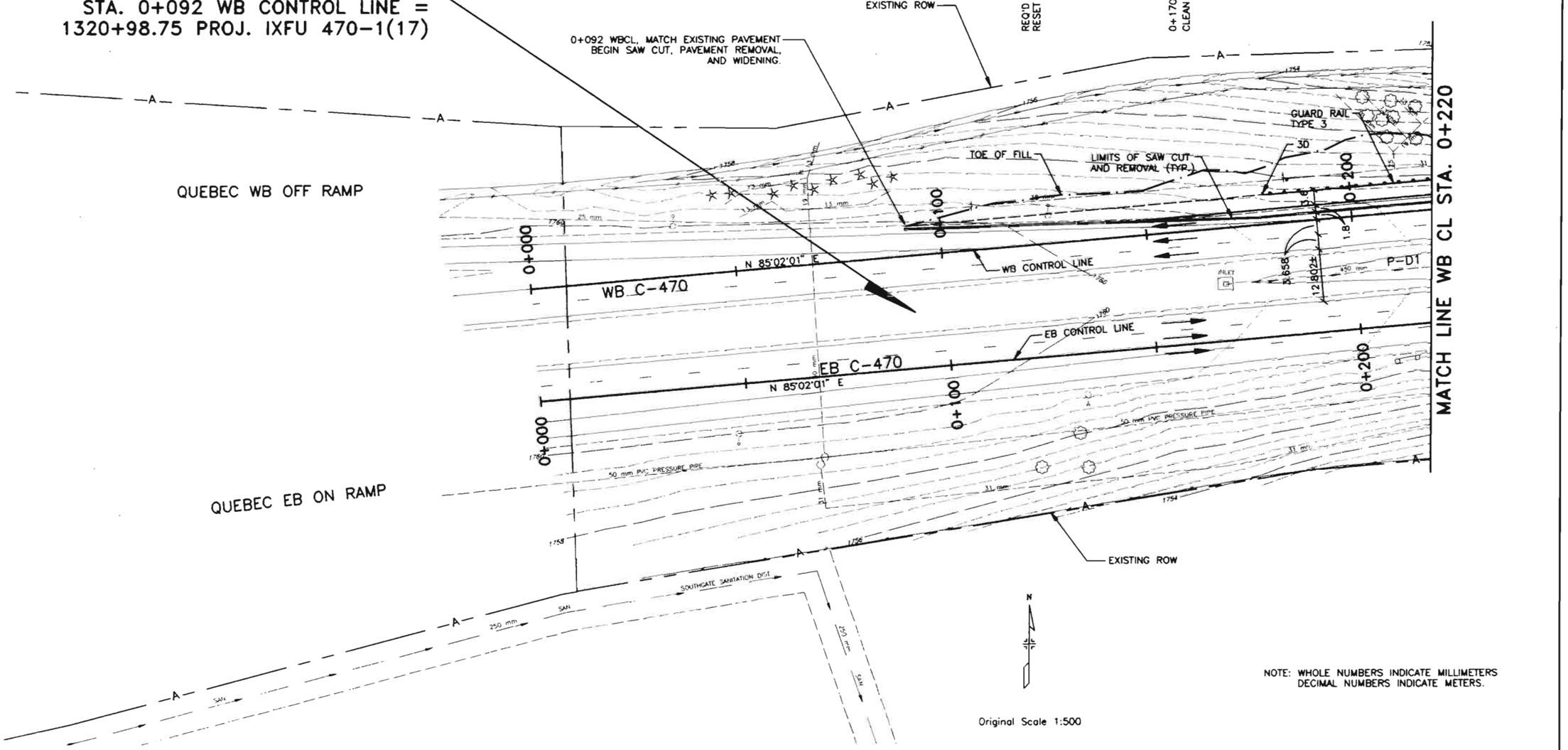

NOTE: WHOLE NUMBERS INDICATE MILLIMETERS
DECIMAL NUMBERS INDICATE METERS.

Original Scale 1:500

FELSBURG HOLT & ULLEVIG

C-470/YOSEMITE INTERCHANGE

PLAN SHEET
C-470 WBCL STA. 0+092 TO STA. 0+220

DATE	PROJECT NO.	DESIGNED BY CH	SHEET NO. 1	DRAWING NO.
JAN 96	95-088	DRAWN BY SS	OF 8 SHEETS	PL-1
		CHECKED BY DB		

G:\95088\ACAD\A5088301.dwg, 1:1, 01/11/96 at 11:18
COMPUTER GENERATED DRAWING, DO NOT ALTER MANUALLY

AS CONSTRUCTED

NO REVISIONS ☐ REVISED ☐ VOID ☐

FEDERAL RD REGION NO.	DIVISION	PROJ. NO.	SHEET NO.	TOTAL SHEETS
VIII	COLORADO	CC 4701-082	1010	

REVISION'S		

CURVE DATA WBML1
T_s = 217.997
E_s = 13.809
θ = 1°52'24" R
L_s = 77.000
L.T. = 51.336
S.T. = 25.669
e = EXISTING

CURVE DATA EBML1
T_s = 239.868
E_s = 17.867
θ = 1°52'04" R
L_s = 75.000
L.T. = 50.003
S.T. = 25.003
Δ_c = 18°08'32"
D_c = 04°58'52"
R_c = 1 150.270
L_c = 364.223
T_c = 183.648
e = EXISTING

ACRES GREEN DRIVE

0+306, 28 RT. EBCL TO 0+316, 84 LT. WBCL ~ REQ'D CLEAN CULVERT (P-E2)

0+310± LT. WBCL ~ REQ'D EMBANKMENT PROTECTOR TYPE 3 (EP-F1)

0+424 LT. WBCL ~ REQ'D MATCH EXISTING FENCE

BEGIN SHOULDER TAPER 0+495.251

END SHOULDER TAPER 0+555.251

COMBINATION WIRE FENCE WITH TREATED WOODEN POSTS

SC STA. 0+495.251 BACK
PC STA. 0+495.251 AHEAD

LIMITS OF SAW CUT AND REMOVAL (TYP.)

EXISTING ROW

TOE OF FILL

BRIDGE WIDENING SEE BRIDGE PLANS

GUARD RAIL TYPE 3

SLOTTED RAIL TERMINAL

WB ON RAMP CONTROL LINE

CURVE WBML1

CURVE WBOR1

WB CONTROL LINE

WB C-470

N 85°02'01" E

EB C-470

EB CONTROL LINE

CURVE EBML1

TOP OF CUT

EXISTING ROW

0+327.315, END SHOULDER TAPER.

0+317.315, BEGIN SAW CUT AND PAVEMENT REMOVAL AND WIDENING. MATCH EXISTING END OF WALL. BEGIN SHOULDER TAPER.

TS 0+419.729

SC 0+494.729

LIMITS OF SAW CUT AND REMOVAL (TYP.)

MATCH LINE WB CL STA. 0+220

MATCH LINE WB CL STA. 0+565

0+225 ~ REQ'D CLEAN CULVERT (P-02)

0+225, 29 RT. EBCL ~ REQ'D RELAY RIPRAP (RR-D2)

0+259 29 RT. TO 0+304, 30 RT. EBCL ~ REQ'D CLEAN CULVERT. (P-E1)

N

Original Scale 1:500

NOTE: WHOLE NUMBERS INDICATE MILLIMETERS
DECIMAL NUMBERS INDICATE METERS.

FELSBURG HOLT & ULLEVIG

C-470/YOSEMITE INTERCHANGE

PLAN SHEET
C-470 WBCL STA. 0+220 TO STA. 0+565

DATE	PROJECT NO.	DESIGNED BY CH	SHEET NO. 2	DRAWING NO.
FEB 96	95-088	DRAWN BY SS	OF 8 SHEETS:	PL-2
		CHECKED BY DB		

COMPUTER GENERATED DRAWING DO NOT ALTER MANUALLY

AS CONSTRUCTED			
NO REVISIONS ☐	REVISED ☐	VOID ☐	

FEDERAL RD REGION NO.	DIVISION	PROJ. NO.	SHEET NO.	TOTAL SHEETS
VIII	COLORADO	CC 4701-082	67	

REVISIONS		

CURVE DATA WBOR1

PI STA. = 1+103.321
D_c = 04°41'19"
Δ = 52°54'36"
R = 1222.000
T = 608.071
L = 1128.462
e = .053m/m (EXIST. C470)
MDS = 120 KM/HR.
SSD > 290.000

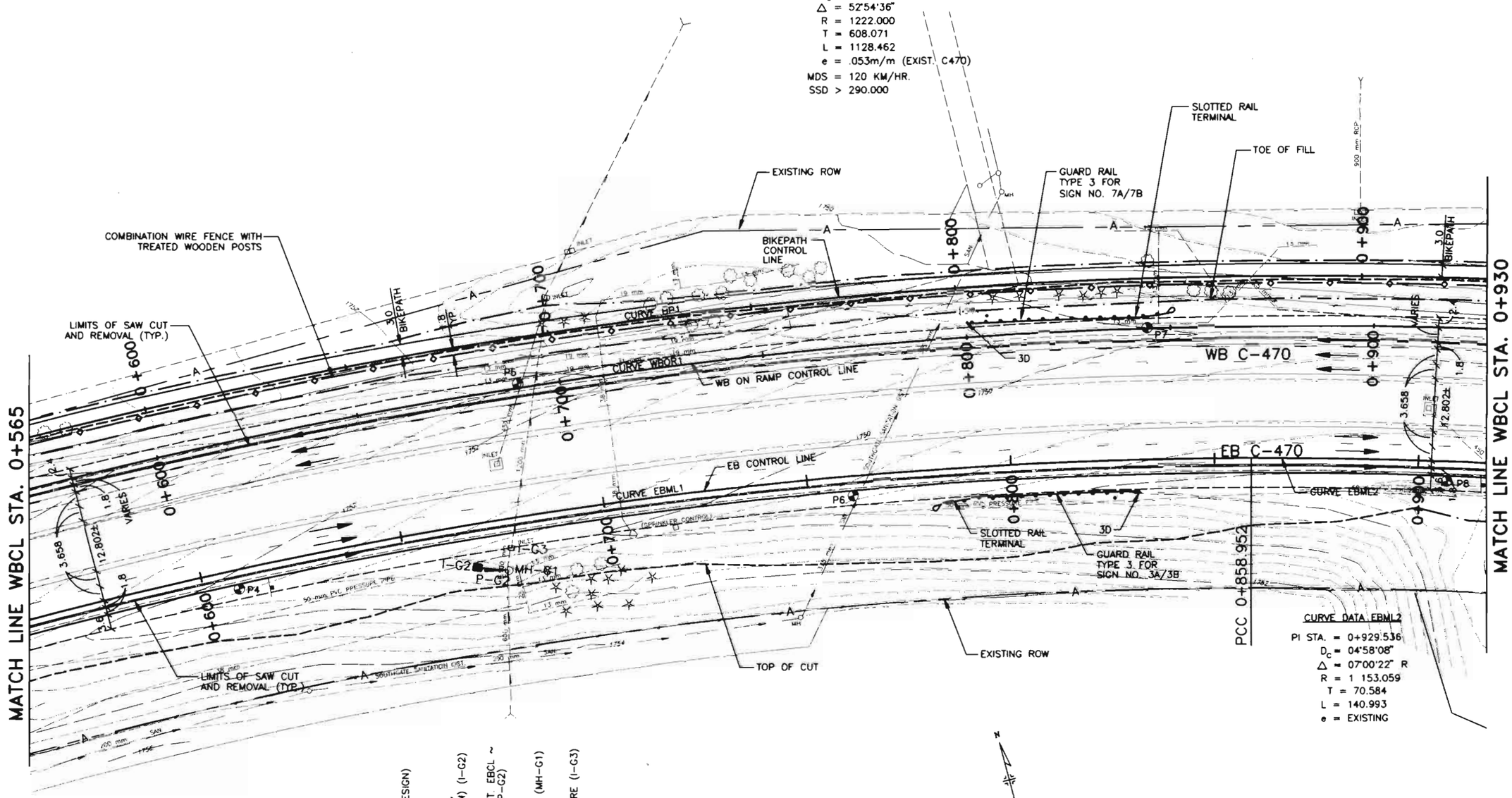

CURVE DATA EBML2

PI STA. = 0+929.536
D_c = 04°58'08"
Δ = 07°00'22" R
R = 1 153.059
T = 70.584
L = 140.993
e = EXISTING

DA = 12.95 ha
Q100 = 1.841 m3/s (DESIGN)
DHW = 1750.260 m
AHW = 1750.400 m

0+667, 10.5 RT. EBCL ~ REQ'D. INLET TYPE D (2W) (I-G2)

0+687, RT. TO 0+674 RT. EBCL ~ REQ'D 600 X 5.0 RCP (P-G2)

0+675, 13 RT. EBCL ~ REQ'D. MODIFY MANHOLE (MH-G1)

0+677, 7 RT. EBCL ~ REQ'D. REMOVE STRUCTURE (I-G3)

N

Original Scale 1:500

NOTE: WHOLE NUMBERS INDICATE MILLIMETERS
DECIMAL NUMBERS INDICATE METERS.

FELSBURG HOLT & ULLEVIG

C-470/YOSEMITE INTERCHANGE
PLAN SHEET
C-470 WBCL STA. 0+565 TO STA. 0+930

DATE	PROJECT NO	DESIGNED BY CH	SHEET NO. 3	DRAWING NO.
FEB 96	95-088	DRAWN BY SS	OF 11 SHEETS	PL-3
		CHECKED BY DB		

COMPUTER GENERATED DRAWING DO NOT ALTER MANUALLY

AS CONSTRUCTED

NO REVISIONS ☐ REVISED ☐ VOID ☐

FEDERAL REGION NO.	DIVISION	PROJ. NO.	SHEET NO.	TOTAL SHEETS
VIII	COLORADO	CC 4701-082	68	

REVISIONS		

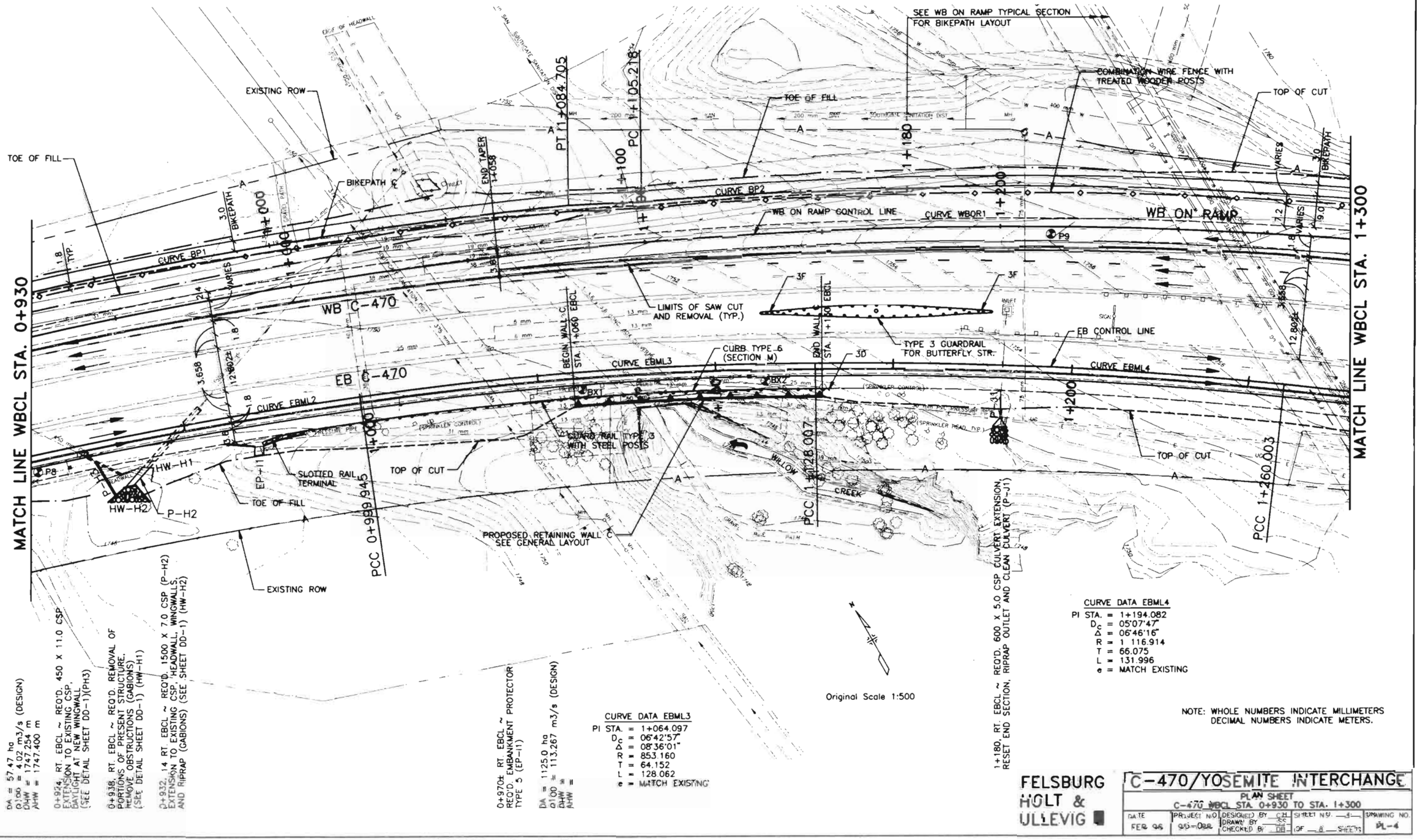

DA = 57.47 ha
Q100 = 4.02 m3/s (DESIGN)
DHW = 1747.254 m
AHW = 1747.400 m

0+924, RT. EBCL ~ REQ'D. 450 X 11.0 CSP EXTENSION TO EXISTING CSP, DAYLIGHT AT NEW WINGWALL (SEE DETAIL SHEET DD-1)(PH3)

0+938, RT. EBCL ~ REQ'D. REMOVAL OF PORTIONS OF PRESENT STRUCTURE, REMOVE OBSTRUCTIONS (GABIONS) (SEE DETAIL SHEET DD-1) (HW-H1)

0+932, 14 RT. EBCL ~ REQ'D. 1500 X 7.0 CSP (P-H2) EXTENSION TO EXISTING CSP, HEADWALL, WINGWALLS, AND RIPRAP (GABIONS) (SEE SHEET DD-1) (HW-H2)

0+970± RT. EBCL ~ REQ'D. EMBANKMENT PROTECTOR TYPE 5 (EP-11)

DA = 1125.0 ha
Q100 = 113.267 m3/s (DESIGN)
DHW = ?
AHW = ?

CURVE DATA EBML3
PI STA. = 1+064.097
D_c = 06°42'57"
Δ_c = 08°36'01"
R = 853.160
T = 64.152
L = 128.062
e = MATCH EXISTING

1+180, RT. EBCL ~ REQ'D. 600 X 5.0 CSP CULVERT EXTENSION, RESET END SECTION, RIPRAP OUTLET AND CLEAN CULVERT (P-J1)

CURVE DATA EBML4
PI STA. = 1+194.082
D_c = 05°07'47"
Δ_c = 06°46'16"
R = 1 116.914
T = 66.075
L = 131.996
e = MATCH EXISTING

NOTE: WHOLE NUMBERS INDICATE MILLIMETERS
DECIMAL NUMBERS INDICATE METERS.

FELSBURG HOLT & ULLEVIG

C-470/YOSEMITE INTERCHANGE

PLAN SHEET
C-470 WBCL STA. 0+930 TO STA. 1+300

DATE	PROJECT NO.	DESIGNED BY CH	SHEET NO. 4	DRAWING NO.
FEB 96	95-088	DRAWN BY SC		PL-4
		CHECKED BY DB	OF 8 SHEETS	

COMPUTER GENERATED DRAWING! DO NOT ALTER MANUALLY!

AS CONSTRUCTED					
NO REVISIONS		REVISED		VOID	

FEDERAL RD REGION NO.	DIVISION	PROJ. NO.	SHEET NO.	TOTAL SHEETS
VIII	COLORADO	CC 4701-082	69	

REVISIONS		

CURVE DATA WBOR1
PI STA. = 1+103.321
D_c = 4°41'19"
Δ = 52°54'36"
R = 1 222.000
T = 608.070
L = 1 128.462
e = 0.053m/m (EXIST C470)
MDS = 120 KM/HR.
SSD_H > 290.000

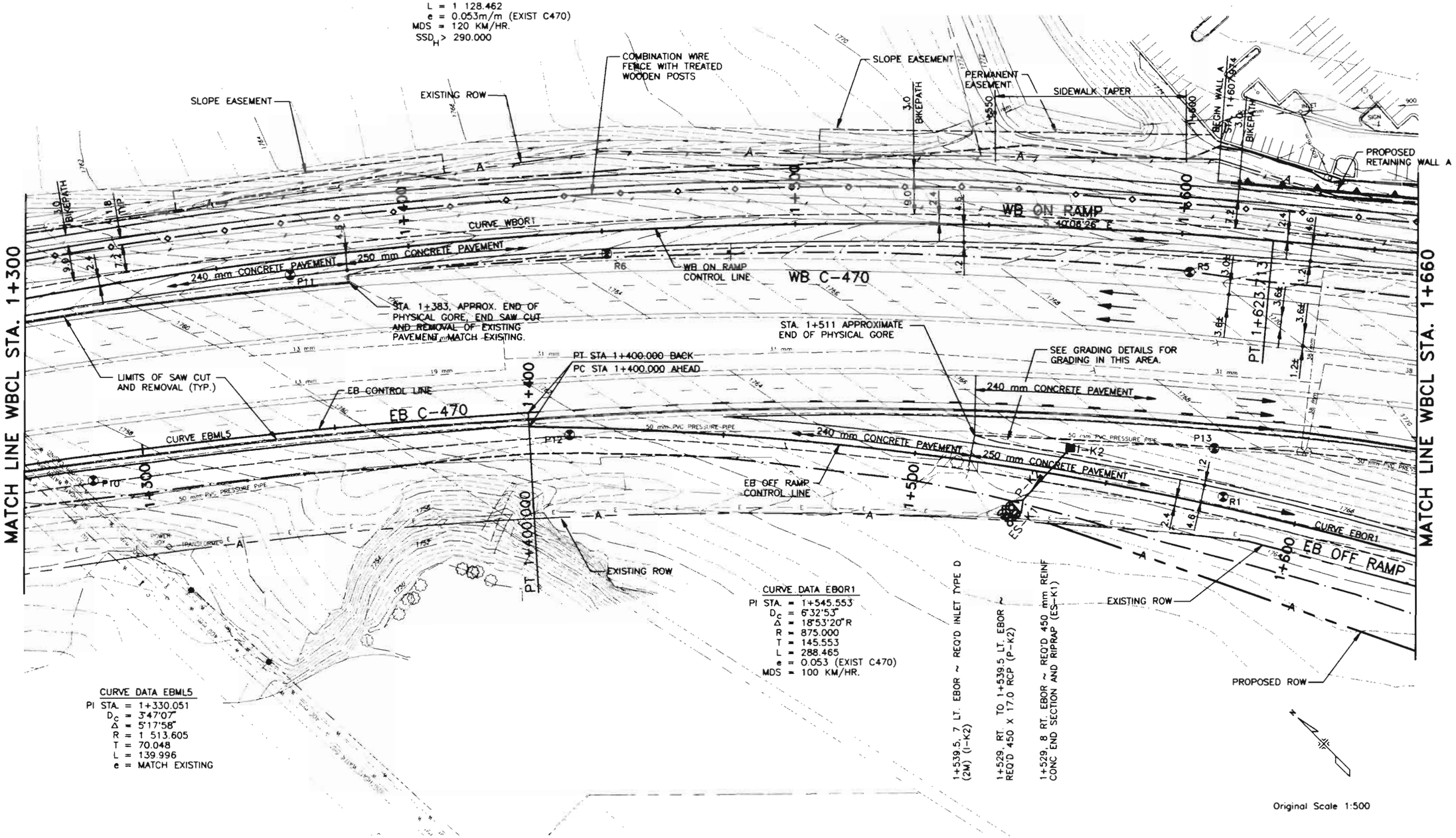

CURVE DATA EBOR1
PI STA. = 1+545.553
D_c = 6°32'53"
Δ = 18°53'20"R
R = 875.000
T = 145.553
L = 288.465
e = 0.053 (EXIST C470)
MDS = 100 KM/HR.

1+539.5, 7 LT. EBOR ~ REQ'D INLET TYPE D (2M) (I-K2)

1+529, RT. TO 1+539.5 LT. EBOR ~ REQ'D 450 X 17.0 RCP (P-K2)

1+529, 8 RT. EBOR ~ REQ'D 450 mm REINF CONC END SECTION AND RIPRAP (ES-K1)

CURVE DATA EBML5
PI STA. = 1+330.051
D_c = 3°47'07"
Δ = 5°17'58"
R = 1 513.605
T = 70.048
L = 139.996
e = MATCH EXISTING

Original Scale 1:500

NOTE: WHOLE NUMBERS INDICATE MILLIMETERS
DECIMAL NUMBERS INDICATE METERS.

FELSBURG HOLT & ULLEVIG

C-470/YOSEMITE INTERCHANGE				
PLAN SHEET C-470 WBCL STA. 1+300 TO STA. 1+660				
DATE FEB 96	PROJECT NO. 95-088	DESIGNED BY CH DRAWN BY SS CHECKED BY DB	SHEET NO. 5 OF 8 SHEETS	DRAWING NO. PL-5

COMPUTER GENERATED DRAWING DO NOT ALTER MANUALLY

AS CONSTRUCTED			
NO REVISIONS ☐	REVISED ☐	VOID ☐	

FEDERAL RD REGION NO.	DIVISION	PROJ. NO	SHEET NO.	TOTAL SHEETS
VIII	COLORADO	CC 4701-082	70	

REVISIONS		

WEST BOUND ON RAMP STORM SEWER

1+838.5, 18 RT. WBCL ~ REQ'D REMOVE END SECTION (ES-B1)
1+838.5 RT. TO 1+847 RT. WBCL ~ REQ'D 900 X 9.5 CSP (P-B2)
1+847, 13 RT. WBCL ~ REQ'D INLET TYPE D (4M) (I-B2)
1+847 RT. TO 1+848.5 LT. WBCL ~ REQ'D 600 X 17.5 RCP (P-B4)
1+848.5, 5.5 LT. WBCL ~ REQ'D INLET TYPE C (2M) (I-B4)
1+848.5 WBCL TO 1+307.689 LT. YCL ~ REQ'D 450 X 13.5 RCP (P-B5)
1+307.689, 18.189 LT. YCL~ REQ'D INLET TYPE R L4.5 (2M) (I-B5)
1+847 RT. TO 1+859.5 RT. WBCL ~ REQ'D 900 X 12.0 CSP (P-B3)
1+859.5, 12 RT. WBCL ~ REQ'D REMOVE END SECTION (ES-B3)

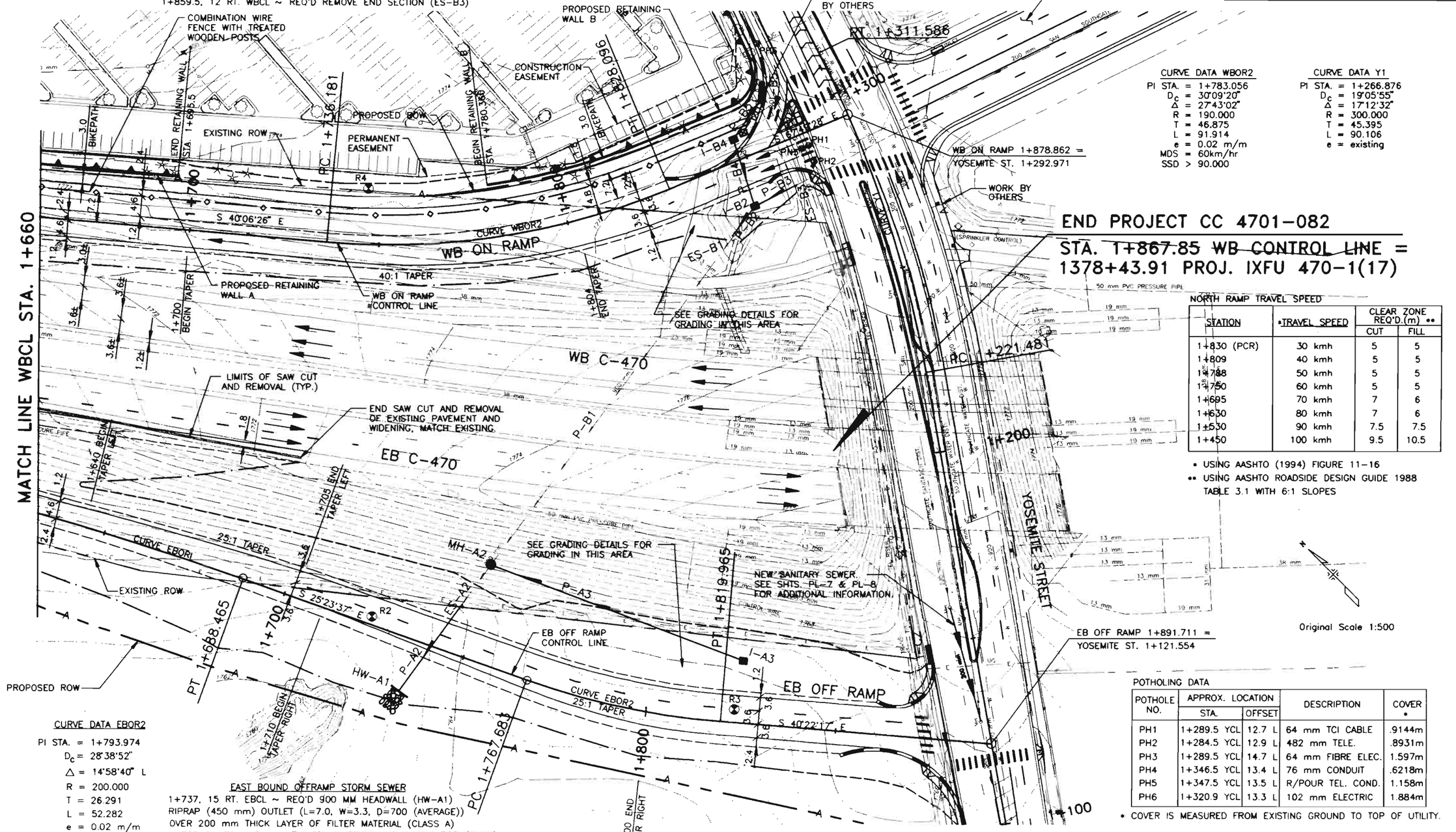

CURVE DATA WBOR2

PI STA. = 1+783.056
D_c = 30°09'20"
Δ = 27°43'02"
R = 190.000
T = 46.875
L = 91.914
e = 0.02 m/m
MDS = 60km/hr
SSD > 90.000

CURVE DATA Y1

PI STA. = 1+266.876
D_c = 19°05'55"
Δ = 17°12'32"
R = 300.000
T = 45.395
L = 90.106
e = existing

CURVE DATA EBOR2

PI STA. = 1+793.974
D_c = 28°38'52"
Δ = 14°58'40" L
R = 200.000
T = 26.291
L = 52.282
e = 0.02 m/m
MDS = 62 KM/HR.

EAST BOUND OFFRAMP STORM SEWER

1+737, 15 RT. EBCL ~ REQ'D 900 MM HEADWALL (HW-A1)
RIPRAP (450 mm) OUTLET (L=7.0, W=3.3, D=700 (AVERAGE))
OVER 200 mm THICK LAYER OF FILTER MATERIAL (CLASS A)
1+737 RT. TO 1+748.5 LT. EBCL ~ REQ'D 900 X 40.0 RCP (P-A2)
1+745, 13 LT. EBCL ~ REQ'D REMOVE 14.0 M CULVERT AND END SECTION (ES-A2)
1+748.5, 25.5 LT. EBCL ~ REQ'D MANHOLE BOX BASE (6M)(MH-A2)
1+748.5 LT. TO 1+825 LT. EBCL ~ REQ'D 600 X 70.0 RCP (P-A3)
1+825, 16.5 LT. EBCL ~ REQ'D INLET TYPE C (2M) (I-A3)
1+838.5, 18 RT. WBCL TO 1+748.5, 25.5 LT. EBCL ~ REQ'D CLEAN CULVERT (P-B1)

END PROJECT CC 4701-082

STA. 1+867.85 WB CONTROL LINE = 1378+43.91 PROJ. IXFU 470-1(17)

NORTH RAMP TRAVEL SPEED

STATION	•TRAVEL SPEED	CLEAR ZONE REQ'D.(m) •• CUT	FILL
1+830 (PCR)	30 kmh	5	5
1+809	40 kmh	5	5
1+788	50 kmh	5	5
1+750	60 kmh	5	5
1+695	70 kmh	7	6
1+630	80 kmh	7	6
1+530	90 kmh	7.5	7.5
1+450	100 kmh	9.5	10.5

• USING AASHTO (1994) FIGURE 11-16
•• USING AASHTO ROADSIDE DESIGN GUIDE 1988 TABLE 3.1 WITH 6:1 SLOPES

POTHOLING DATA

POTHOLE NO.	APPROX. LOCATION STA.	OFFSET	DESCRIPTION	COVER •
PH1	1+289.5 YCL	12.7 L	64 mm TCI CABLE	.9144m
PH2	1+284.5 YCL	12.9 L	482 mm TELE.	.8931m
PH3	1+289.5 YCL	14.7 L	64 mm FIBRE ELEC.	1.597m
PH4	1+346.5 YCL	13.4 L	76 mm CONDUIT	.6218m
PH5	1+347.5 YCL	13.5 L	R/POUR TEL. COND.	1.158m
PH6	1+320.9 YCL	13.3 L	102 mm ELECTRIC	1.884m

• COVER IS MEASURED FROM EXISTING GROUND TO TOP OF UTILITY.

NOTE: WHOLE NUMBERS INDICATE MILLIMETERS
DECIMAL NUMBERS INDICATE METERS.

FELSBURG HOLT & ULLEVIG

C-470/YOSEMITE INTERCHANGE

PLAN SHEET
C-470 WBCL STA. 1+660 TO STA. 1+878.862

DATE	PROJECT NO.	DESIGNED BY CH	SHEET NO. 6	DRAWING NO.
FEB 96	95-088	DRAWN BY SS	OF 8 SHEETS	PL-6
		CHECKED BY DD		

C:\95088\ACAD\A7088306.dwg, 1:1, 02/13/96 at 15:10
COMPUTER GENERATED DRAWING DO NOT ALTER MANUALLY

AS CONSTRUCTED			
NO REVISIONS ☐	REVISED ☐	VOID ☐	

FEDERAL RD REGION NO.	DIVISION	PROJ. NO.	SHEET NO.	TOTAL SHEETS
VIII	COLORADO	CC 4701-082	71	

REVISIONS			

PARK MEADOWS DRIVE

0+872.88 YOSEMITE STREET =
0+000.523 ACCESS ROAD

SEE LAYOUT OF ACCESS IN INTERSECTION DETAIL SHEETS.

PROPOSED ROW

EB OFF RAMP

YOSEMITE STREET

0+000

0+800

0+900

1+000

1+100

MH-C1

P-C2

I-C2

YOSEMITE CONTROL LINE
N 34°40'01" E

S 54°56'47" E

OBJECT MARKERS ON 2 m CENTERS.
POSTS TO BE DRIVEN THROUGH PAVEMENT.

2.5

PC 0+046.602

ACCESS ROAD CONTROL LINE

1+100 BEGIN FULL WIDTH REMOVAL OF ASPHALT MAT (PLANING) @ 50 mm DEPTH AND HBP OVERLAY

PIPE TO BE ABANDONED

EB OFF RAMP 1+891.376 =
YOSEMITE ST. 1+121.551

MATCH LINE YOSEMITE ST. STA. 1+150

CURVE DATA AR1
PI STA. = 0+086.023
D_c = 31°49'52"
Δ = 24°42'22"
R = 180.000
T = 39.421
L = 77.617

A

ACCESS ROAD

CURVE AR1

PERMANENT EASEMENT

0+100

PRC 0+124.219

YOSEMITE STREET SANITARY SEWER
1+128, 2.0 LT. CONNECT NEW 200 mm PLASTIC PIPE INTO EXISTING MANHOLE PLUG EXISTING PIPE
1+128 TO 1+159, 5.0 LT. INSTALL 30.1 OF 200 mm PLASTIC PIPE
1+159, 5.0 LT. CONNECT NEW 200 mm PLASTIC PIPE INTO EXISTING MANHOLE PLUG EXISTING PIPE

YOSEMITE STREET STORM SEWER
1+046 11.5 LT.~ REQ'D MANHOLE BOX BASE (6 m)(MH-C1)
1+046 TO 1+146 LT.~ REQ'D 450 X 100.0 RCP (P-C2)
1+146.611, 11.863 LT.~ REQ'D INLET TYPE R L4.5 (2M)(I-C2)

ACCESS ROAD
0+132.000 450 X 6.0 RCP @ 0.50%
450 CONCRETE (P-AR1) END SECTIONS EACH END.

P-AR1

0+117.4 2.5 LT. BEGIN TAPER

0+157.3 2.5 LT. END TAPER

END TAPER 0+136.10 5.5 LT. BEGIN TAPER

CURVE AR2

CURVE AR3

PT 0+191.015

0+200

0+300

0+320.760

N 34°24'07" E

PCC 0+147.962

MATCH EXISTING

CURVE DATA AR2
PI STA. = 0+139.401
D_c = 381°58'19"
Δ = 90°41'26"
R = 15.000
T = 15.182
L = 23.743

CURVE DATA AR3
PI STA. = 0+169.827
D_c = 57°17'45"
Δ = 24°40'03"
R = 100.000
T = 21.865
L = 43.053

NOTE: WHOLE NUMBERS INDICATE MILLIMETERS
DECIMAL NUMBERS INDICATE METERS.

Original Scale 1:500

℄ ACCESS ROAD

6.0 6.0

2.3 1.2 2.5 2.5 1.2 2.3

3:1 4:1 0.00 4:1 3:1

② 105 mm TOPSOIL (TYP.)

150 mm AGGREGATE BASE COURSE (CLASS 6)

POINT OF SLOPE SELECTION

POINT OF SLOPE SELECTION

SECTION A-A

① NOTE: APPROACH ADJACENT TO YOSEMITE WILL BE HOT BITUMINOUS PAVEMENT. SEE TYPICAL SECTION SHEET GN-1.

FELSBURG HOLT & ULLEVIG

C-470/YOSEMITE INTERCHANGE
PLAN SHEET YOSEMITE STREET STA. 0+800 TO STA. 1+150
ACCESS ROAD STA. 0+000 TO STA. 0+320.76

DATE	PROJECT NO	DESIGNED BY CH	SHEET NO. 7	DRAWING NO
FEB 96	95-088	DRAWN BY SS	OF 8 SHEETS	PL-7
		CHECKED BY DB		

G:\95088\ACAD\A5088307.dwg, 5:1, 02/14/96 at 07:20

COMPUTER GENERATED DRAWING DO NOT ALTER MANUALLY

AS CONSTRUCTED

NO REVISIONS ☐ REVISED ☐ VOID ☐

FEDERAL HWY REGION NO.	DIVISION	PROJ. NO.	SHEET NO.	TOTAL SHEETS
VIII	COLORADO	CC 4701-(002)	7Z	

REVISIONS		

CURVE DATA Y1
PI STA. = 1+266.876
D_c = 19°05'55"
Δ = 17°12'32"
R = 300.00
T = 45.395
L = 90.106
e = EXISTING

MATCH LINE YOSEMITE ST. STA. 1+150

EB C-470

WB C-470

WB ON RAMP

PROPOSED ROW

PT 1+819.965

PT 1+828.096

1+280

+221.481

+300

+400

+456.730

1+317.586

3.0 BIKEPATH

2.4 7.2 3.6 3.6 1.2

NEW PSC TRANSFORMER (BY OTHERS)

PROPOSED RETAINING WALL B

END RETAINING WALL B
STA. 1+336.159 YOSEMITE ℄

END TAPER
1+396.648
9.893 LT.

1+457 END FULL WIDTH ROTOMILLING
● 50 mm DEPTH AND OVERLAY

25:1 TAPER

N 17°27'29" E

YOSEMITE ℄

YOSEMITE STREET

ABANDON PIPE

WB ON RAMP 1+878.863 =
YOSEMITE STREET 1+292.971

WORK BY OTHERS

1+155, 1 LT. YOSEMITE
CL ~ REQ'D REMOVE STRUCTURE (MANHOLE) AS PER DETAIL IN MISCELLANEOUS DETAILS

1+244 3.2 LT. YOSEMITE
CL ~ REQ'D REMOVE STRUCTURE (MANHOLE) AND REPLACE WITH 2 OF 200 mm PLASTIC PIPE AS DETAILED IN THE MISC. DETAILS

1+408, 1 LT. YOSEMITE
CL ~ REQ'D REMOVE STRUCTURE (MANHOLE) AS PER DETAIL IN MISCELLANEOUS DETAILS

POTHOLING DATA

POTHOLE NO.	APPROX. LOCATION STA.	OFFSET	DESCRIPTION	COVER
PH1	1+289.5 YCL	12.7 L	64 mm TCI CABLE	.9144m
PH2	1+284.5 YCL	12.9 L	482 mm TELE.	.8931m
PH3	1+289.5 YCL	14.7 L	64 mm FIBRE ELEC.	1.597m
PH4	1+346.5 YCL	13.4 L	76 mm CONDUIT	.6218m
PH5	1+347.5 YCL	13.5 L	R/POUR TEL. COND.	1.158m
PH6	1+320.9 YCL	13.3 L	102 mm ELECTRIC	1.884m

Original Scale 1:500

NOTE: WHOLE NUMBERS INDICATE MILLIMETERS
DECIMAL NUMBERS INDICATE METERS.

FELSBURG HOLT & ULLEVIG

C-470/YOSEMITE INTERCHANGE
PLAN SHEET
YOSEMITE STREET STA. 1+150 TO STA. 1+456.730

DATE	PROJECT NO.	DESIGNED BY CH	SHEET NO. 8	DRAWING NO.
FEB 96	96-088	DRAWN BY KS	OF 8 SHEETS	PL-8
		CHECKED BY DB		

G:\95088_ALIGN\95088305.dwg, T.T., 02/14/96 11:07:51

COMPUTER GENERATED DRAWING DO NOT ALTER MANUALLY

AS CONSTRUCTED			
NO REVISIONS ☐	REVISED ☐	VOID ☐	

FEDERAL RD REGION NO.	DIVISION	PROJ. NO.	SHEET NO.	TOTAL SHEETS
VIII	COLORADO	CC 4701-082	73	

REVISIONS		

SCALE 1:500 HORIZONTAL
1:50 VERTICAL

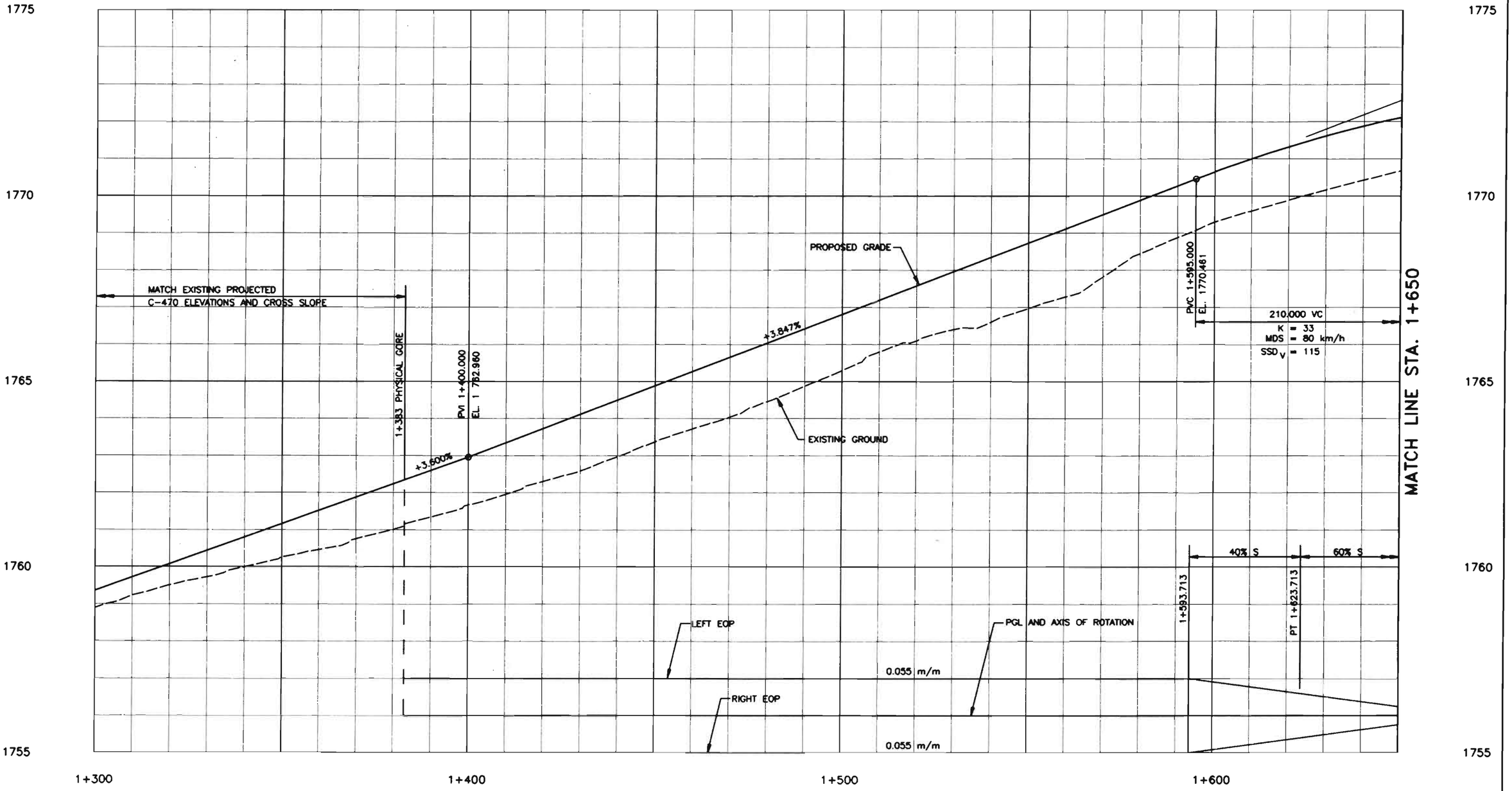

NOTE: WHOLE NUMBERS INDICATE MILLIMETERS.
DECIMAL NUMBERS INDICATE METERS.

FELSBURG HOLT & ULLEVIG

C-470/YOSEMITE INTERCHANGE

NORTH RAMP PROFILE
STA. 1+300 TO STA. 1+650

DATE	PROJECT NO.	DESIGNED BY	CH	SHEET NO.	1	DRAWING NO.
JAN 96	95-088	DRAWN BY	SS	OF	2	SHEETS PP-1
		CHECKED BY	DB			

G:\95088\ACAD\A5088330.dwg, P 1, 01/09/96 at 10:19

COMPUTER GENERATED DRAWING DO NOT ALTER MANUALLY

AS CONSTRUCTED				
NO REVISIONS	REVISED	VOID		

FEDERAL RD REGION NO.	DIVISION	PROJ. NO.	SHEET NO.	TOTAL SHEETS
VIII	COLORADO	CC 4701-082	74	

REVISIONS		

SCALE 1:500 HORIZONTAL
1:50 VERTICAL

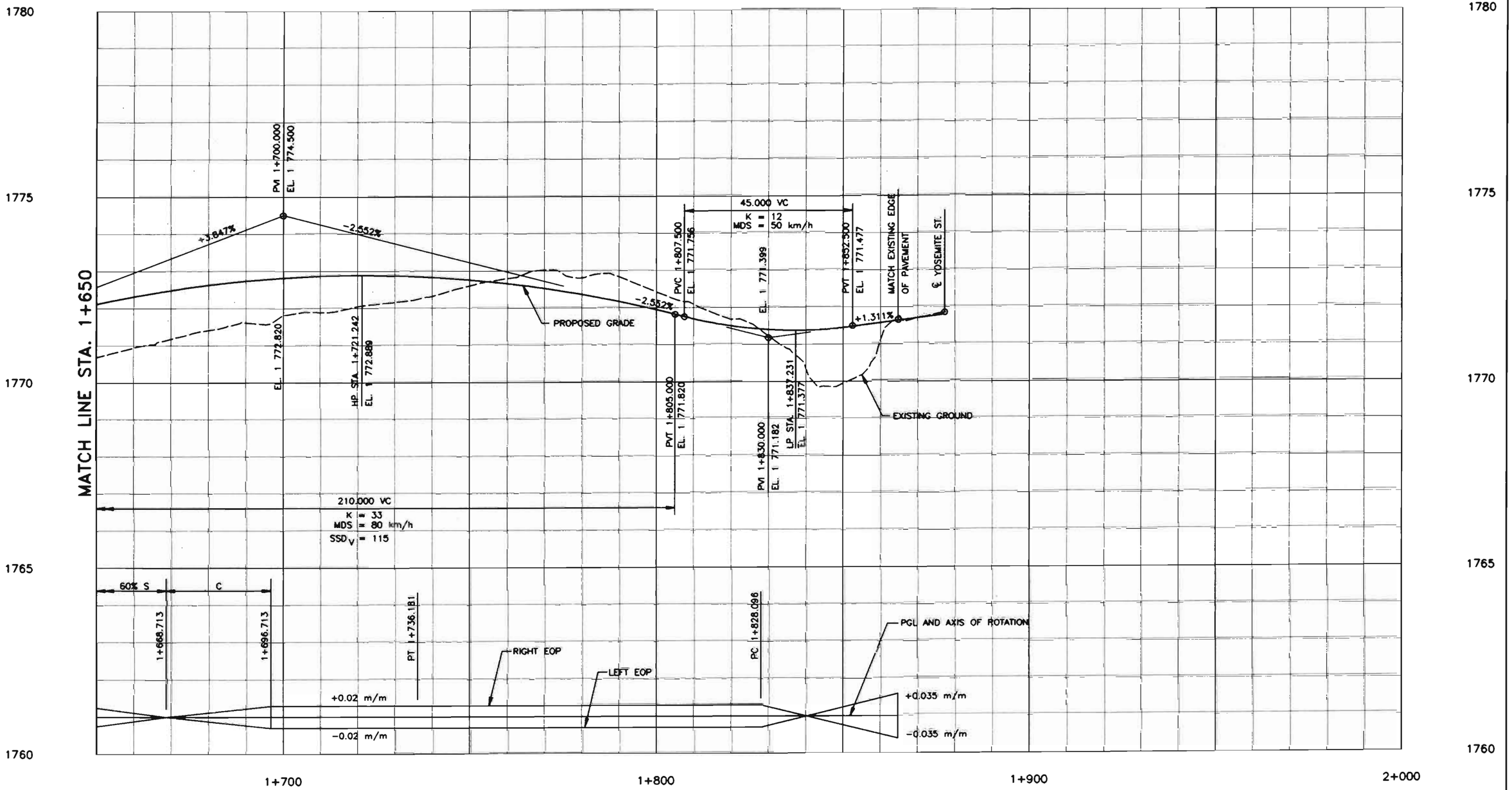

NOTE: WHOLE NUMBERS INDICATE MILLIMETERS.
DECIMAL NUMBERS INDICATE METERS.

FELSBURG HOLT & ULLEVIG

C-470/YOSEMITE INTERCHANGE
NORTH RAMP PROFILE
STA. 1+650 TO STA. 1+878.735

DATE	PROJECT NO.	DESIGNED BY CH	SHEET NO. 2	DRAWING NO.
JAN 96	95-088	DRAWN BY SS	OF 2 SHEETS	PP-2
		CHECKED BY DB		

AS CONSTRUCTED		
NO REVISIONS ☐	REVISED ☐	VOID ☐

FEDERAL REGION NO.	STATE DIVISION	PROJ. NO.	SHEET NO.	TOTAL SHEETS
VIII	COLORADO	CC 4701-082	75	

REVISIONS		

SCALE 1:500 HORIZONTAL
1:50 VERTICAL

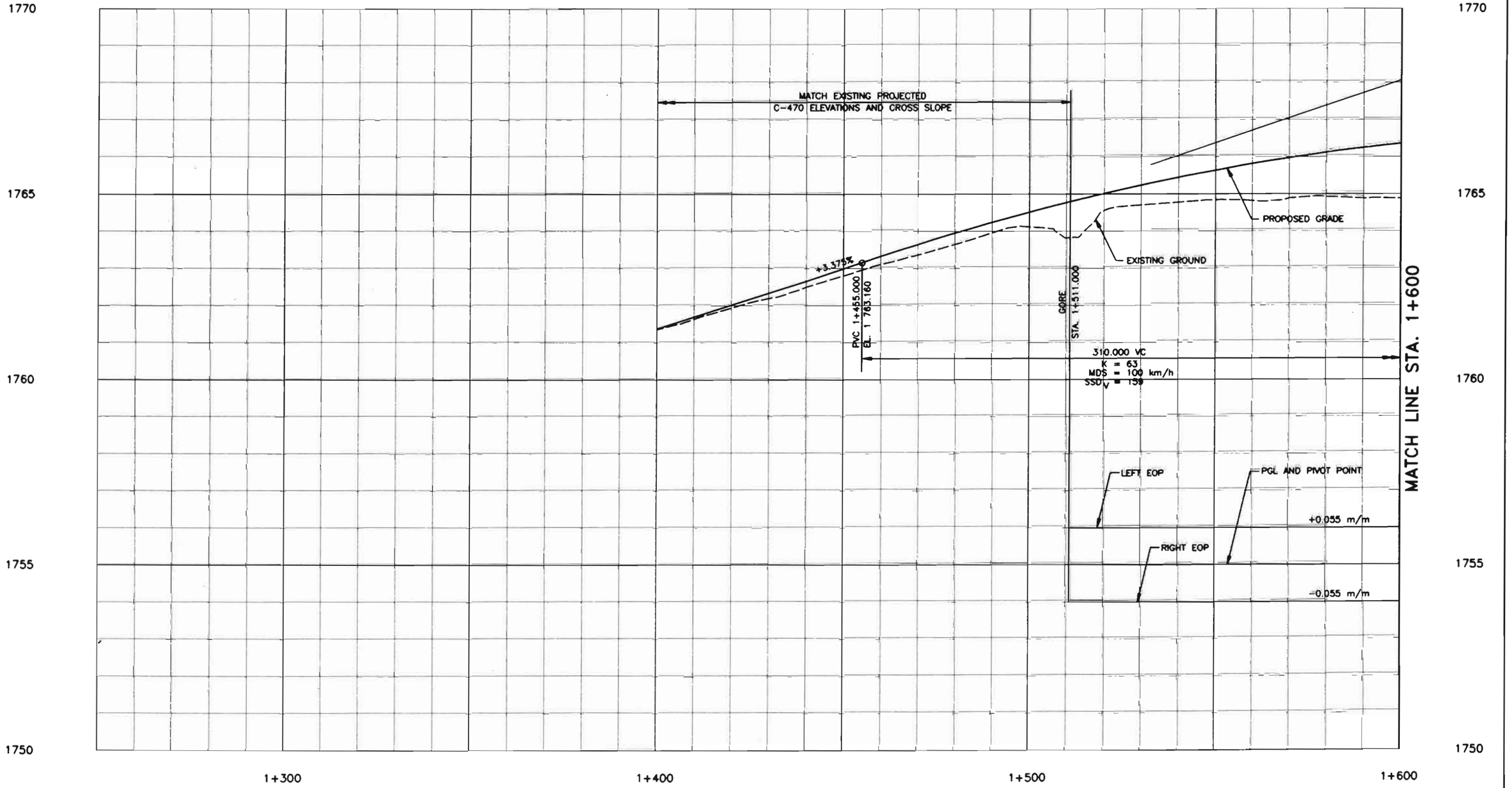

NOTE: WHOLE NUMBERS INDICATE MILLIMETERS.
DECIMAL NUMBERS INDICATE METERS.

FELSBURG HOLT & ULLEVIG

C-470/YOSEMITE INTERCHANGE
SOUTH RAMP PROFILE
STA. 1+400 TO STA. 1+600

DATE	PROJECT NO.	DESIGNED BY CH	SHEET NO. 1	DRAWING NO.
JAN 96	95-088	DRAWN BY DE	OF 2 SHEETS	PP-3
		CHECKED BY		

G:\95088\ACAD\A5088522.dwg, 1:1, 01/09/96 at 10:25

COMPUTER GENERATED DRAWING DO NOT ALTER MANUALLY

AS CONSTRUCTED					
NO REVISIONS ☐	REVISED ☐	VOID ☐			

FEDERAL REGION NO.	STATE NO.	DIVISION	PROJ. NO.	SHEET NO.	TOTAL SHEETS
VIII		COLORADO	CP 4701-082	76	

REVISIONS		

SCALE 1:500 HORIZONTAL
1:50 VERTICAL

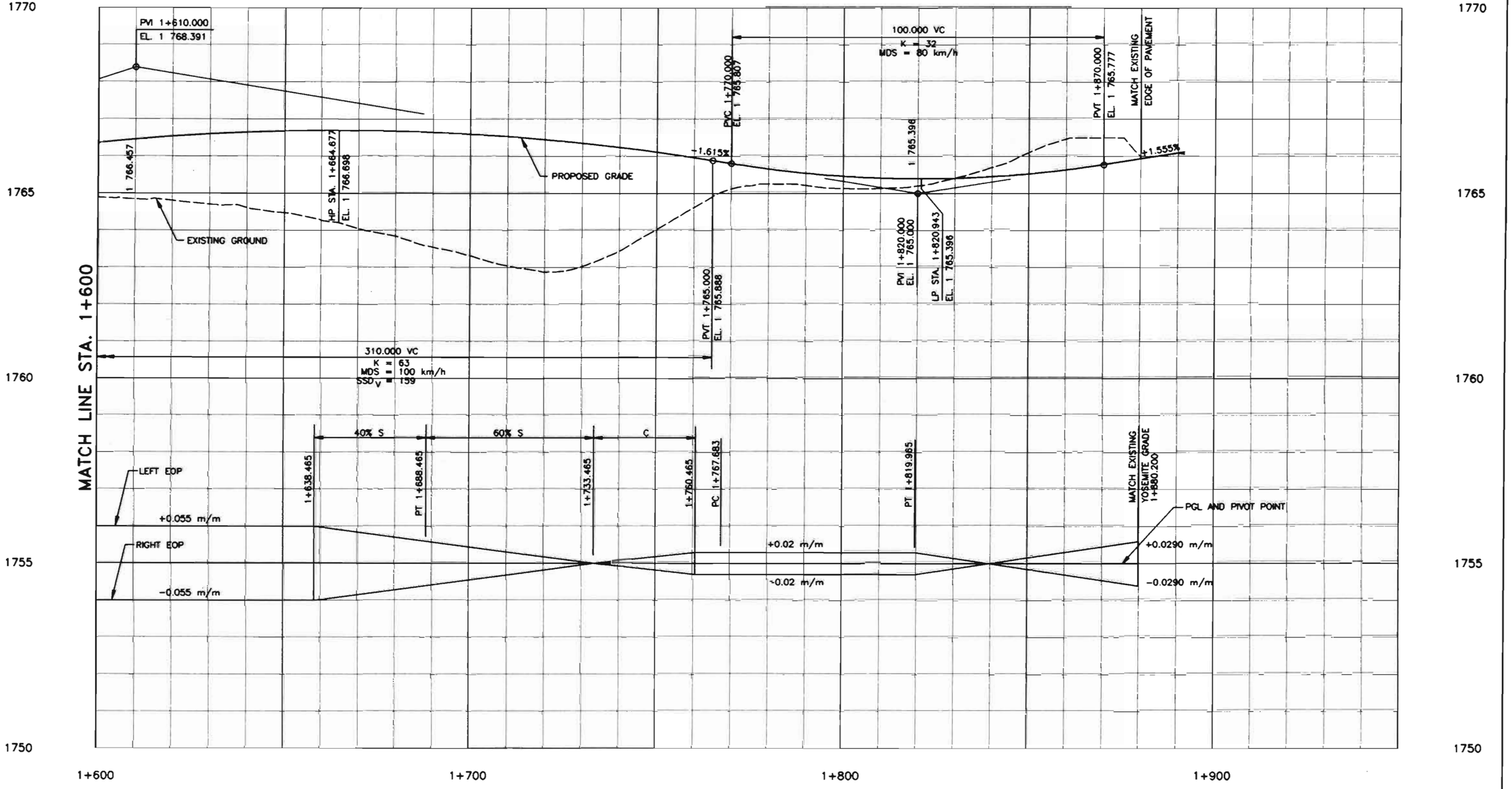

NOTE: WHOLE NUMBERS INDICATE MILLIMETERS.
DECIMAL NUMBERS INDICATE METERS.

FELSBURG HOLT & ULLEVIG

C-470/YOSEMITE INTERCHANGE

SOUTH RAMP PROFILE
STA. 1+600 TO STA. 1+900

DATE	PROJECT NO.	DESIGNED BY CH	SHEET NO. 2	DRAWING NO.
JAN 96	95-088	DRAWN BY SS	OF 2 SHEETS	PP-4
		CHECKED BY DB		

G:\95088\ACAD\A5088323.dwg, 1/1, 01/09/96 at 10:27

COMPUTER GENERATED DRAWING DO NOT ALTER MANUALLY

AS CONSTRUCTED					
NO REVISIONS		REVISED		VOID	

FEDERAL RD REGION NO.	DIVISION	PROJ. NO.	SHEET NO.	TOTAL SHEETS
VIII	COLORADO	CC 4701-082	77	

REVISIONS		

SCALE 1:500 HORIZONTAL
1:50 VERTICAL

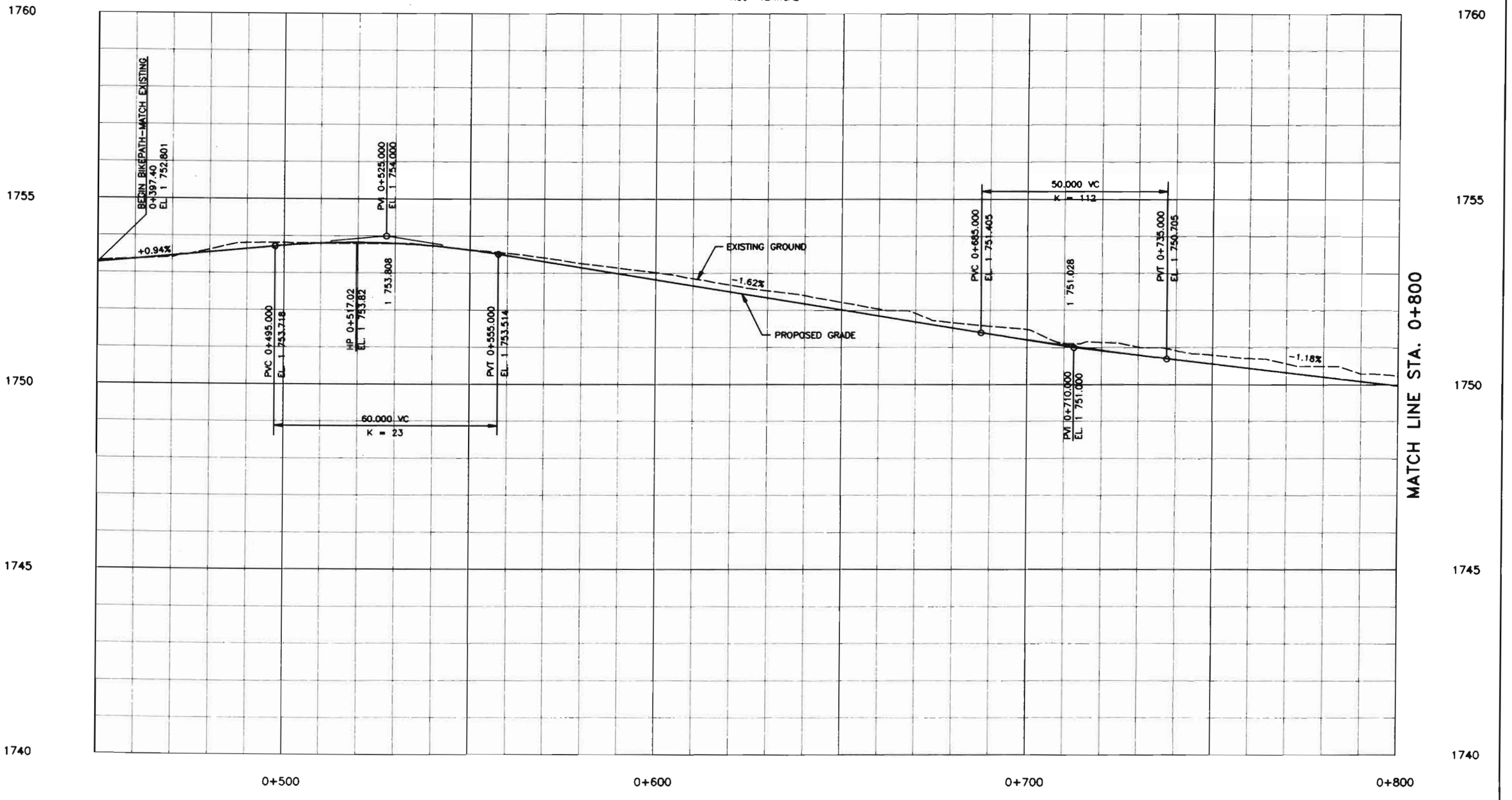

NOTE: WHOLE NUMBERS INDICATE MILLIMETERS.
DECIMAL NUMBERS INDICATE METERS.

FELSBURG HOLT & ULLEVIG

C-470/YOSEMITE INTERCHANGE				
BIKEPATH PROFILE STA. 0+450 TO STA. 0+800				
DATE JAN 96	PROJECT NO. 95-088	DESIGNED BY CH DRAWN BY SS CHECKED BY DB	SHEET NO. 1 OF 2 SHEETS	DRAWING NO. PP-5

G:\95088\ACAD\A50883_4.dwg, 1:1, 01/12/96 at 11:48

COMPUTER GENERATED DRAWING DO NOT ALTER MANUALLY

AS CONSTRUCTED					
NO REVISIONS		REVISED		VOID	

FEDERAL RD REGION NO.	DIVISION	PROJ. NO.	SHEET NO.	TOTAL SHEETS
VIII	COLORADO	CC 4701-083	78	

REVISIONS		

SCALE 1:500 HORIZONTAL
1:50 VERTICAL

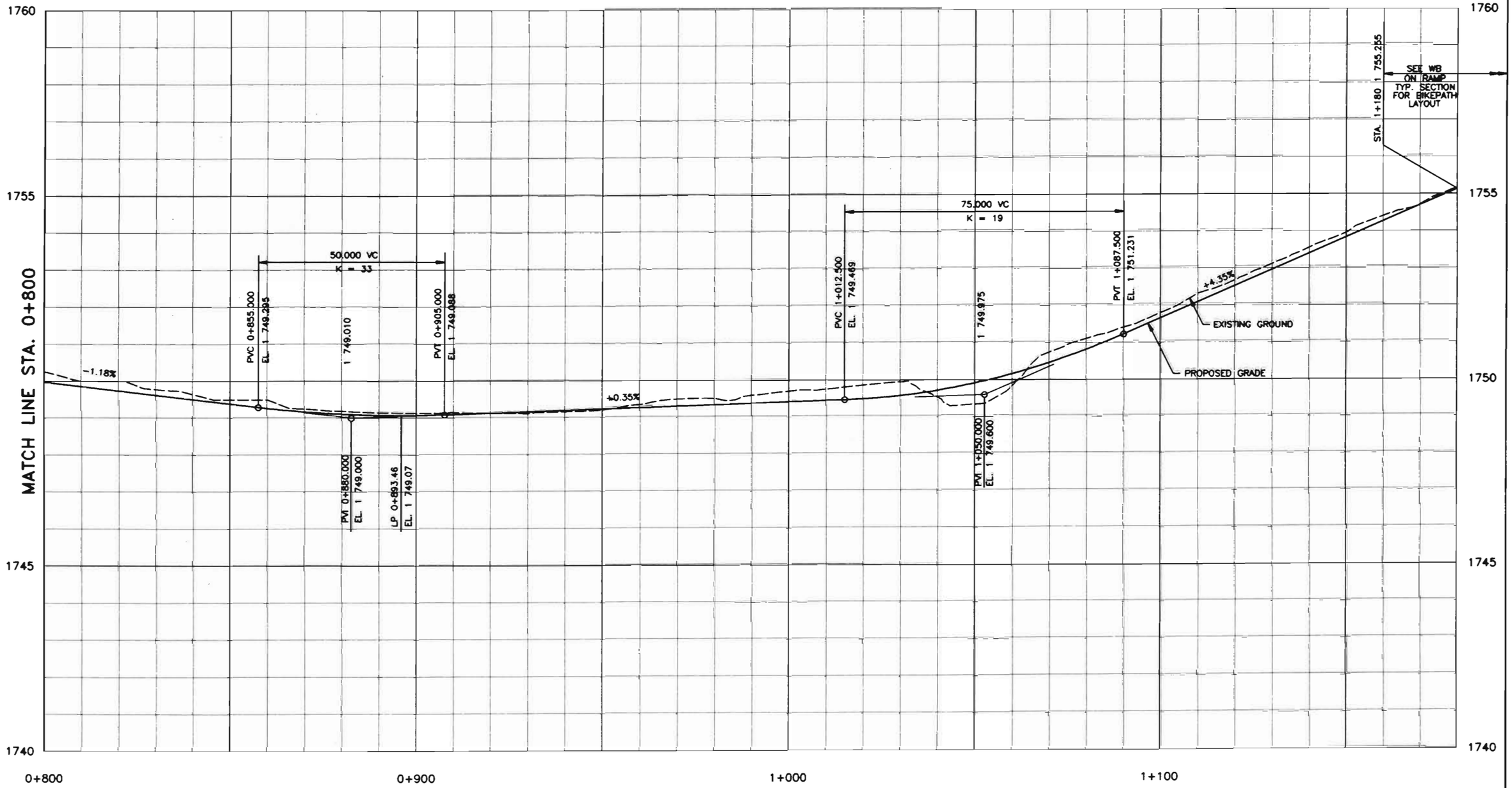

NOTE: WHOLE NUMBERS INDICATE MILLIMETERS.
DECIMAL NUMBERS INDICATE METERS.

FELSBURG HOLT & ULLEVIG

C-470/YOSEMITE INTERCHANGE

BIKEPATH PROFILE
STA. 0+800 TO STA. 1+180

DATE	PROJECT NO.	DESIGNED BY	DRAWN BY	CHECKED BY	SHEET NO.	OF	SHEETS	DRAWING NO.
JAN '96	95-086	DB	DB	DB	2	2		PP-6

AS CONSTRUCTED			
NO REVISIONS ☐	REVISED ☐	VOID ☐	

FEDERAL RD REGION NO.	DIVISION	PROJ. NO.	SHEET NO.	TOTAL SHEETS
VIII	COLORADO	CC 4701-082	79	

REVISIONS		

SCALE 1:500 HORIZONTAL
1:50 VERTICAL

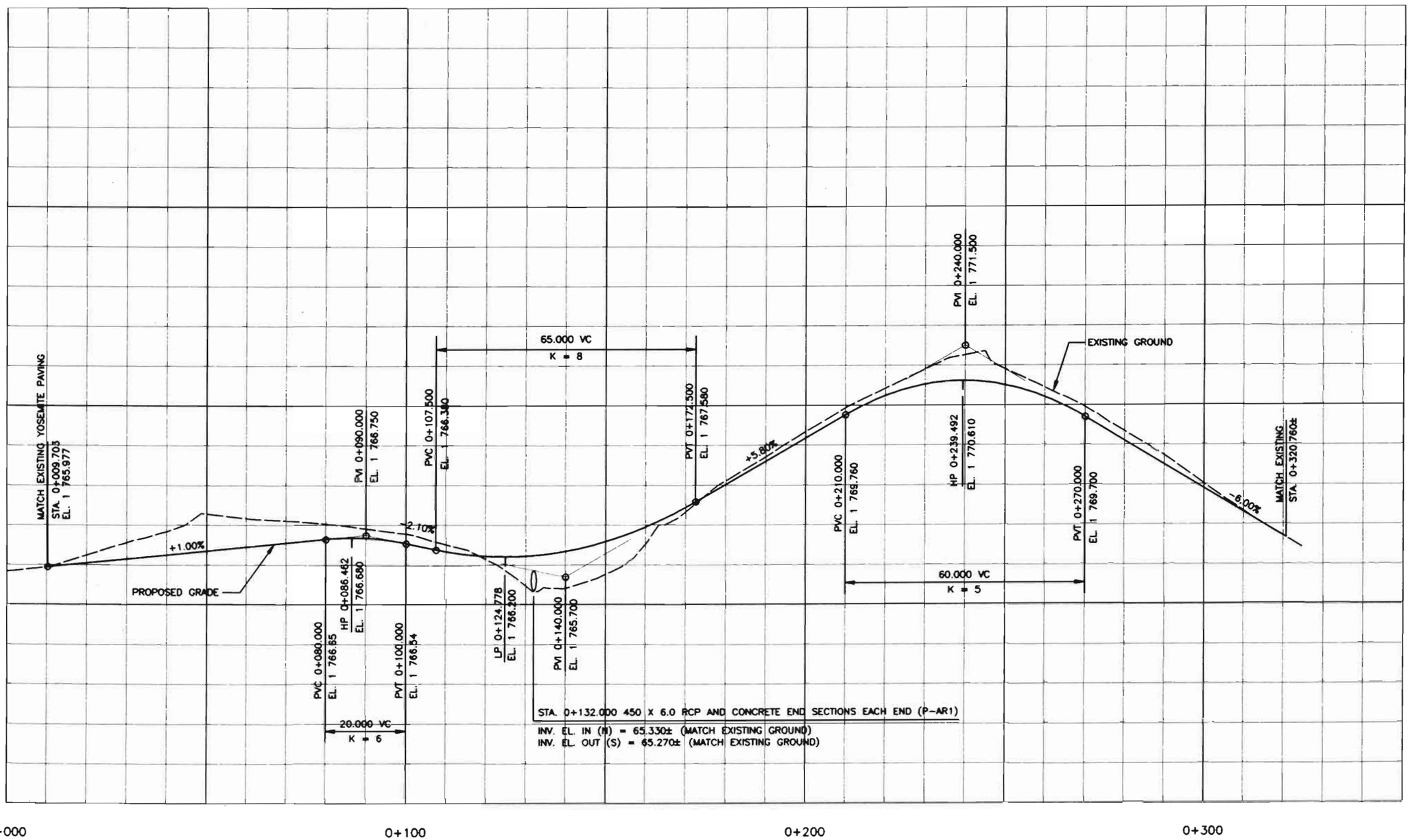

NOTE: WHOLE NUMBERS INDICATE MILLIMETERS.
DECIMAL NUMBERS INDICATE METERS.

FELSBURG HOLT & ULLEVIG

C-470/YOSEMITE INTERCHANGE

ACCESS ROAD PROFILE
STA. 0+000 TO STA. 0+320.76

DATE	PROJECT NO.	DESIGNED BY DB	SHEET NO. 1	DRAWING NO.
JAN 96	95-088	DRAWN BY PS	OF 1 SHEETS	PP-7
		CHECKED BY DB		

G:\95088\ACAD\An088326.dwg 1:1 01/12/96 at 11:16

AS CONSTRUCTED

NO REVISIONS ☐ REVISED ☐ VOID ☐

FEDERAL REGION NO.	DIVISION	PROJ. NO.	SHEET NO.	TOTAL SHEETS
VIII	COLORADO	CC 4701-082	35	215

REVISIONS		

LEGEND

EXISTING CONTOURS

PROPOSED CONTOURS

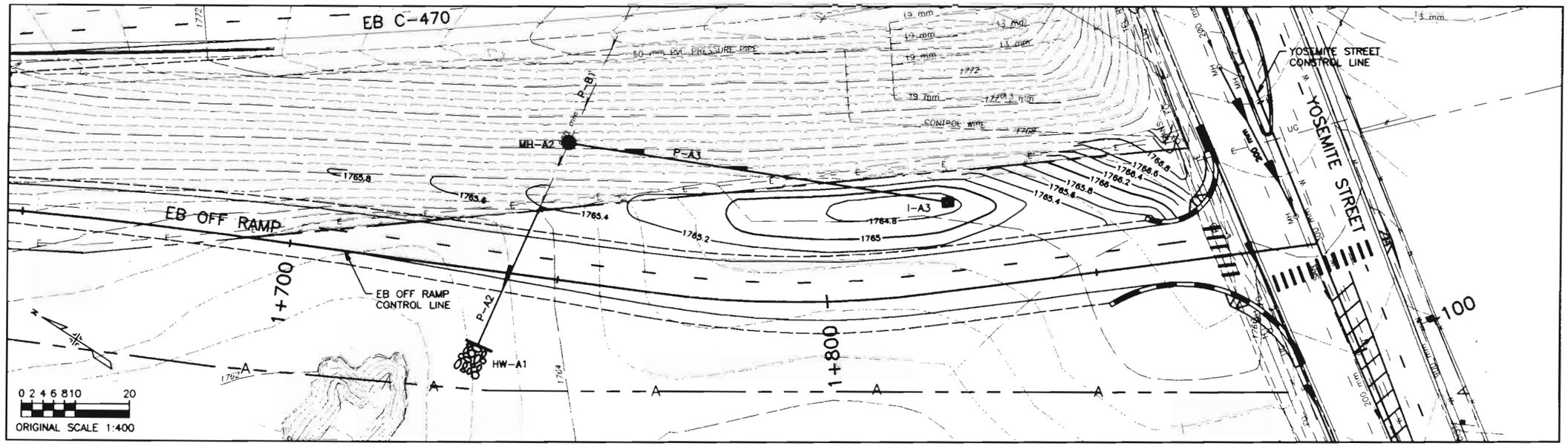

GRADING PLAN

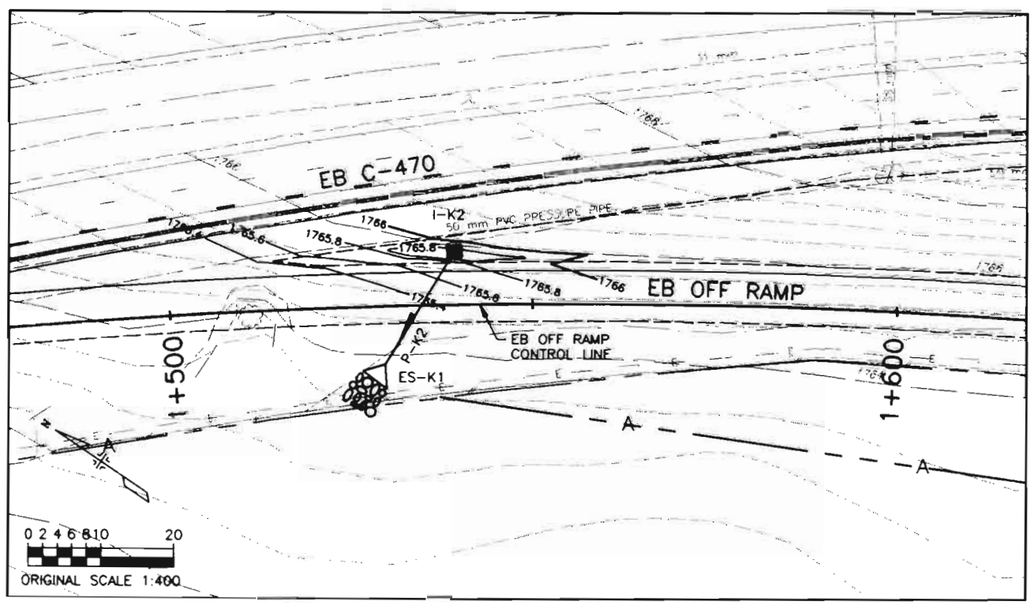

GRADING PLAN

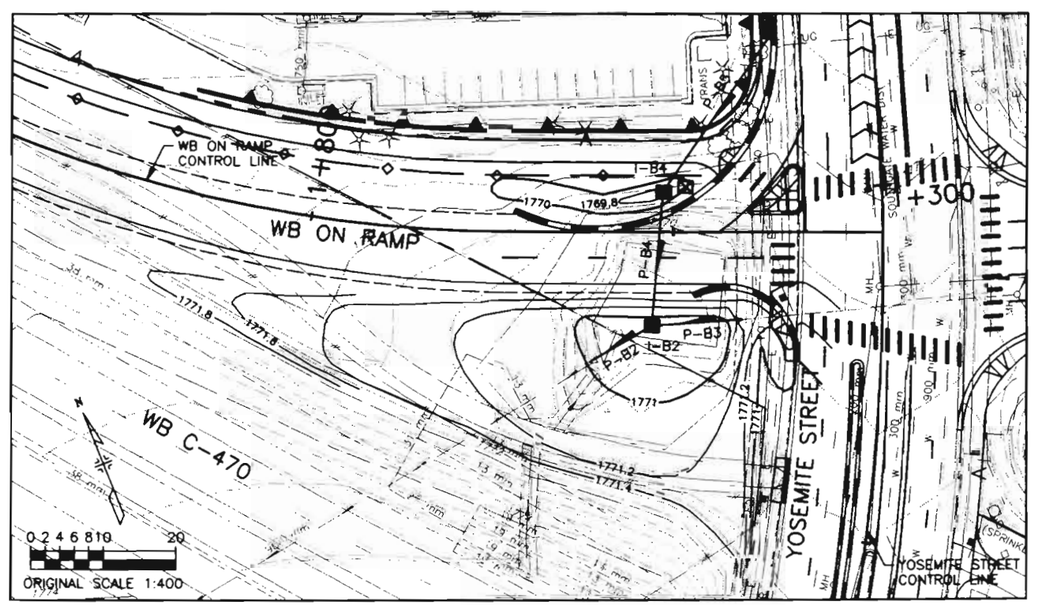

GRADING PLAN

NOTES:

1. PROPOSED CONTOURS ARE TO FINISHED GRADE.
2. PROPOSED CONTOURS SHALL TRANSITION SMOOTHLY TO INLETS AND SHOULDERS.

FELSBURG HOLT & ULLEVIG

C-470/YOSEMITE INTERCHANGE

GRADING DETAILS

DATE	PROJECT NO.	DESIGNED BY	SHEET NO.	DRAWING NO.
FEB 96	95-086	DRAWN BY SD		GD-1
		CHECKED BY DB		

G:\95086\ACAD\A5086X0.dwg 1:1, 02/14/96 at 07:38

COMPUTER GENERATED DRAWING. DO NOT ALTER MANUALLY

AS CONSTRUCTED					
NO REVISIONS ☐	REVISED ☐	VOID ☐			

FEDERAL RD REGION NO.	DIVISION	PROJ. NO.	SHEET NO.	TOTAL SHEETS
VIII	COLORADO	CC 4701-082	81	

REVISIONS		

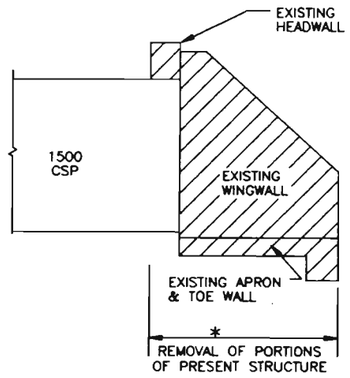

* ITEM REMOVAL OF PORTIONS OF PRESENT STRUCTURE INCLUDES REMOVAL OF HEADWALL, WINGWALLS, APRON AND TOEWALL, FOR STRUCTURE AS INDICATED ON THE PLANS AND SHOWN ABOVE.

REMOVAL DETAIL

NOT TO SCALE

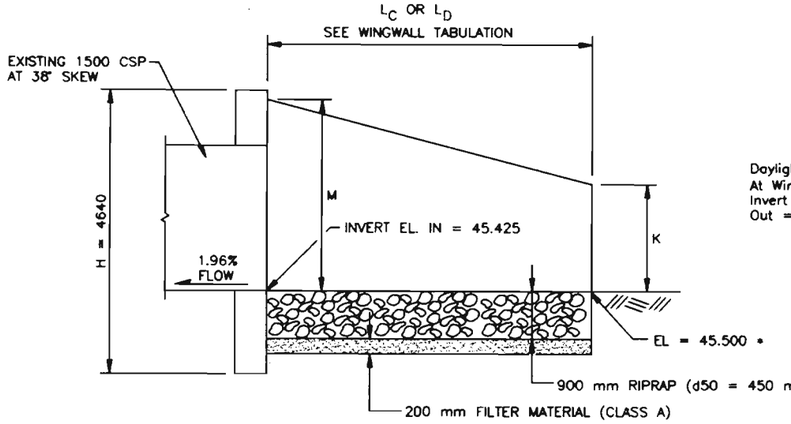

• APPROX. ELEVATION. MATCH EXISTING GROUND.

HEADWALL & WINGWALL PROFILE

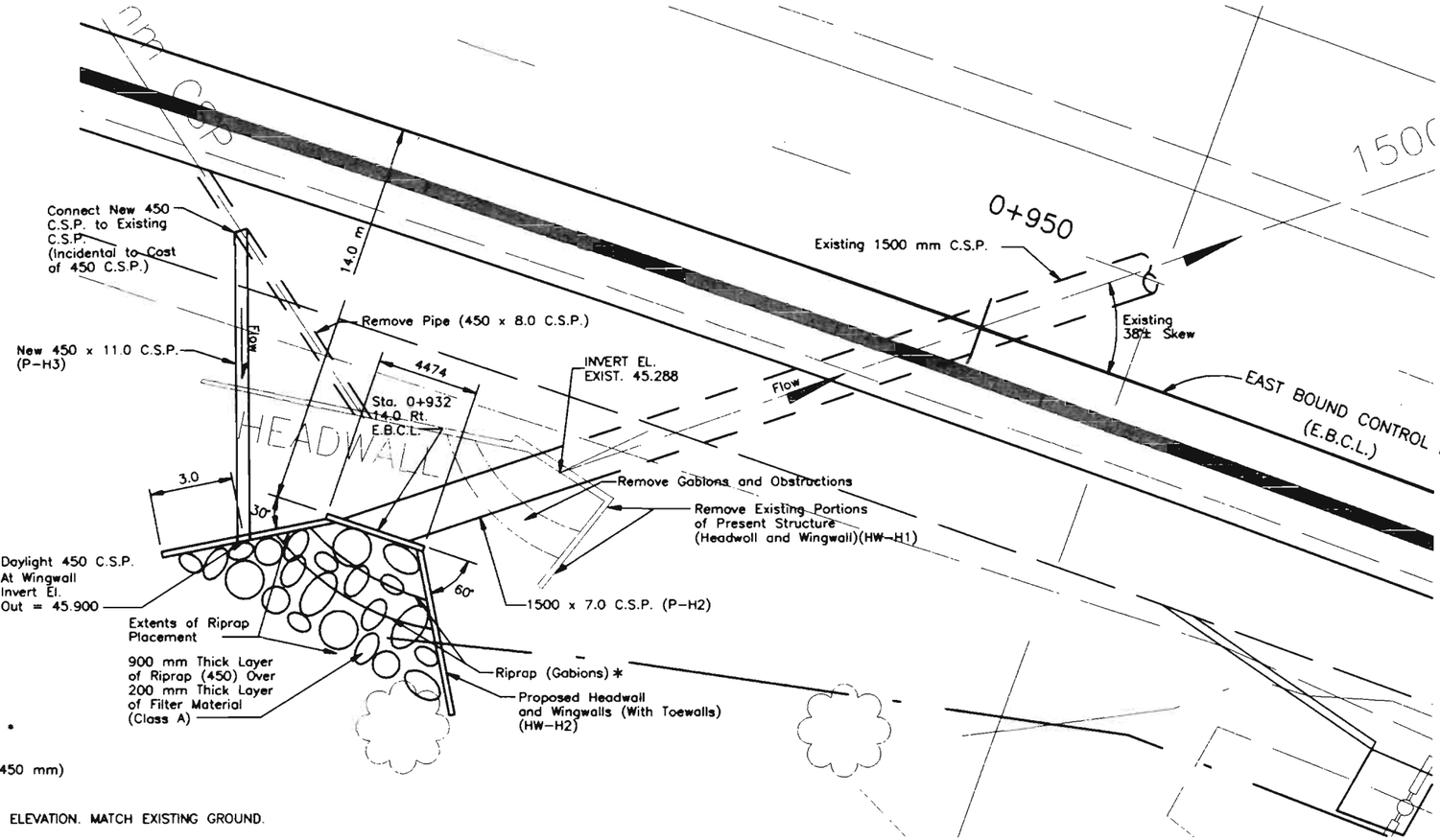

HEADWALL & WINGWALL PLAN

* RIPRAP (GABIONS) SHALL BE PLACED IN THE NEW LOCATION TO COMPLIMENT THAT CURRENLY IN PLACE. THE CONTRACTOR IS ADVISED TO INVESTIGATE GABIONS IN PLACE PRIOR TO REMOVAL.

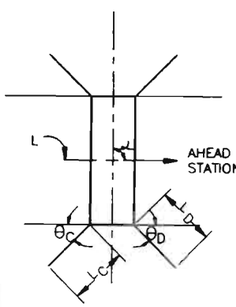

WINGWALL TABULATION

NUMBER	STATION	CSP SIZE	SKEW ∠	θ_C	θ_D	L_C	L_D	M	K
HW-H1	0+932,14.0 RT.	1500	38°±	30°	60°	6.0	6.0	1900	1219

SEE STANDARD PLANS M & S STANDARDS M-601-10 AND M-601-20 FOR DETAILS.

NOTE

WHOLE NUMBERS INDICATE MILLIMETERS
DECIMAL NUMBERS INDICATE METERS

FELSBURG HOLT & ULLEVIG

C-470/YOSEMITE INTERCHANGE

DRAINAGE DETAILS

DATE	PROJECT NO.	DESIGNED BY	SHEET NO.	DRAWING NO.
FEB 96	95-088	DRAWN BY DS CHECKED BY DB	OF 1 SHEETS	DD-1

C:\35088\ACAD\A508830.dwg, 11, 02/14/96 at 07:55

COMPUTER GENERATED DRAWING DO NOT ALTER MANUALLY

AS CONSTRUCTED			
NO REVISIONS ☐	REVISED ☐	VOID ☐	

FEDERAL REGION NO.	RD NO.	DIVISION	PROJ. NO.	SHEET NO.	TOTAL SHEETS
XIII		COLORADO	CC 4701-082	82	

REVISIONS		

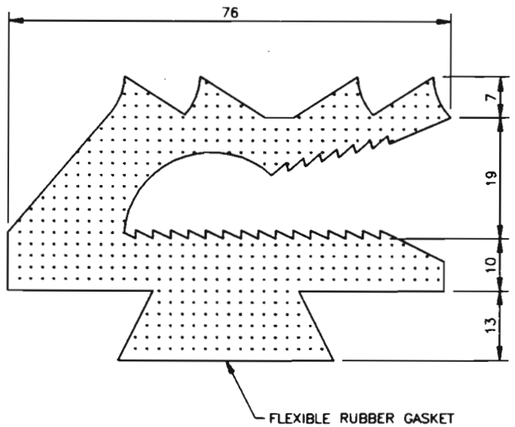

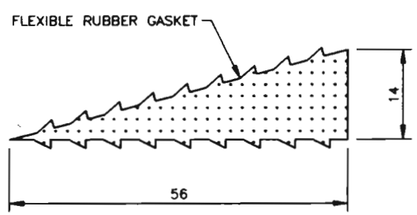

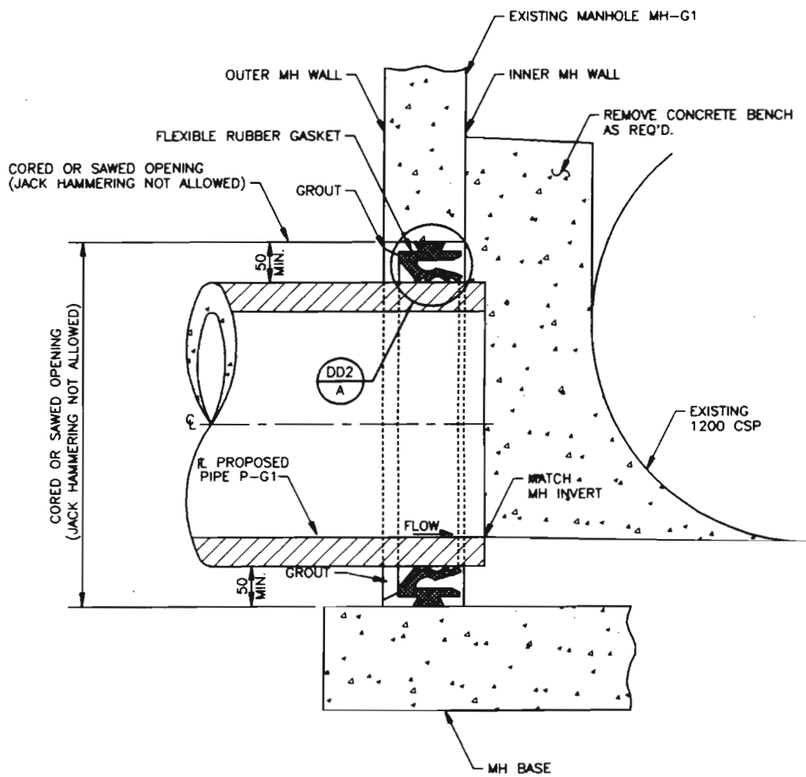

DD2/A DETAIL-FLEXIBLE WEDGE TYPE GASKET

NO SCALE

NOTE:

1. ALL MATERIAL SPECIFICATIONS AND INSTALLATION REQUIREMENTS SHALL BE IN ACCORDANCE WITH THE STANDARD SPECIFICATIONS APPLICABLE TO THE PROJECT.

MODIFY MANHOLE DETAIL FOR MH-G1

FELSBURG HOLT & ULLEVIG

C-470/YOSEMITE INTERCHANGE

DRAINAGE DETAILS

DATE	PROJECT NO.	DESIGNED BY EL / DRAWN BY SD / CHECKED BY DB	SHEET NO. 1 OF 1 SHEETS	DRAWING NO.
JAN 96	95-088			DD-2

G:\95088\ACAD\A508843I.dwg, T.T., 01/11/96 at 09:45
COMPUTER GENERATED DRAWING DO NOT ALTER MANUALLY

AS CONSTRUCTED			
NO REVISIONS ☐	REVISED ☐	VOID ☐	

FEDERAL RD REGION NO.	DIVISION	PROJ. NO.	SHEET NO.	TOTAL SHEETS
VIII	COLORADO	CC 4701-082	83	

REVISIONS		

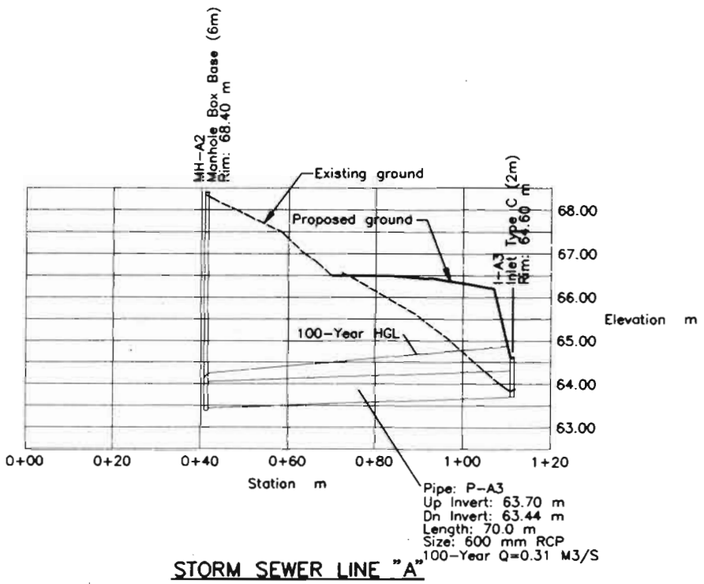

STORM SEWER LINE "A"

1+748.5, 25.5 LT TO 1+825, 16.5 EBCL

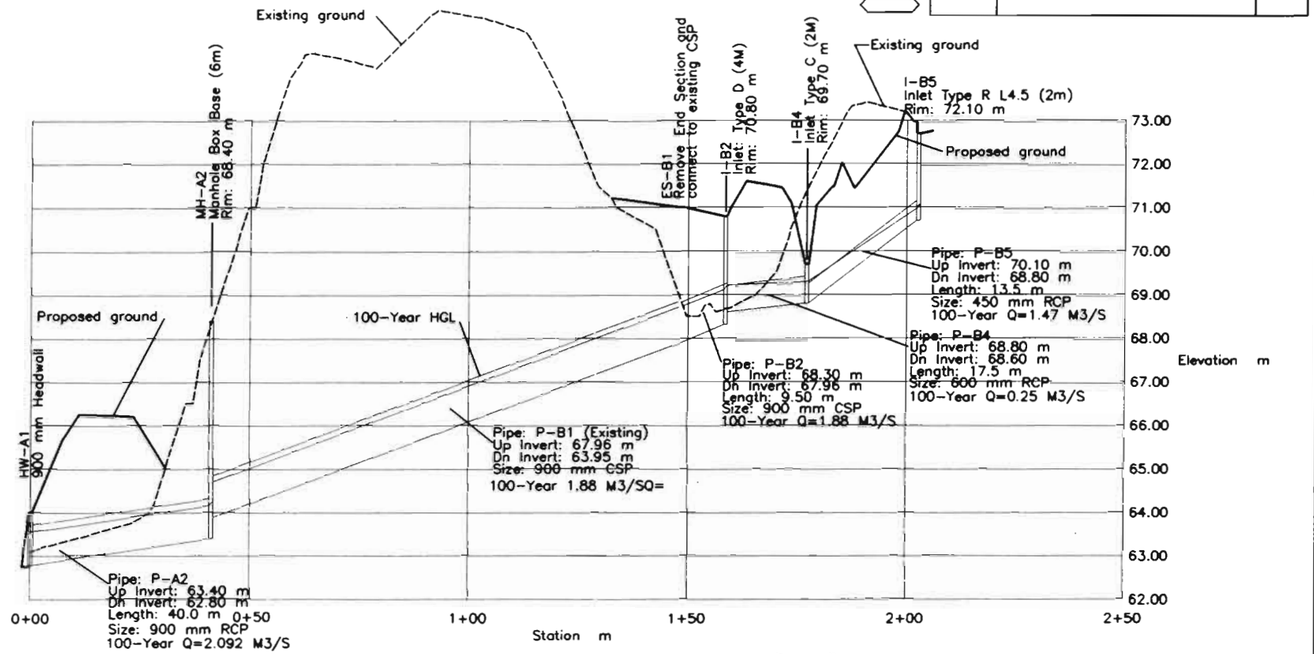

STORM SEWER LINE "A-B"

STA. 1+737, 15.0 RT. WBCL TO STA. 1+321.430, 18.139 LT. YOSEMITE STREET

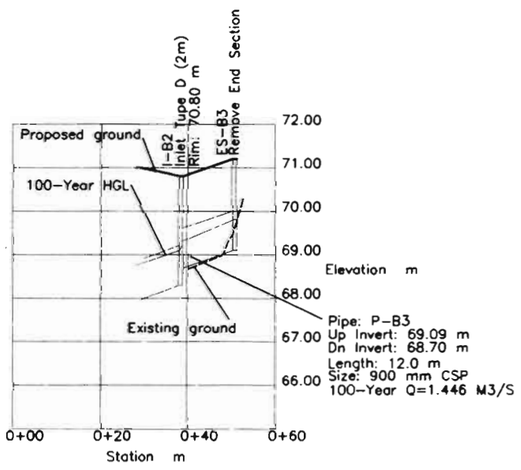

STORM SEWER LINE "B"

STA. 1+847, 13.0 TO 1+859.5, 12.0 RT.

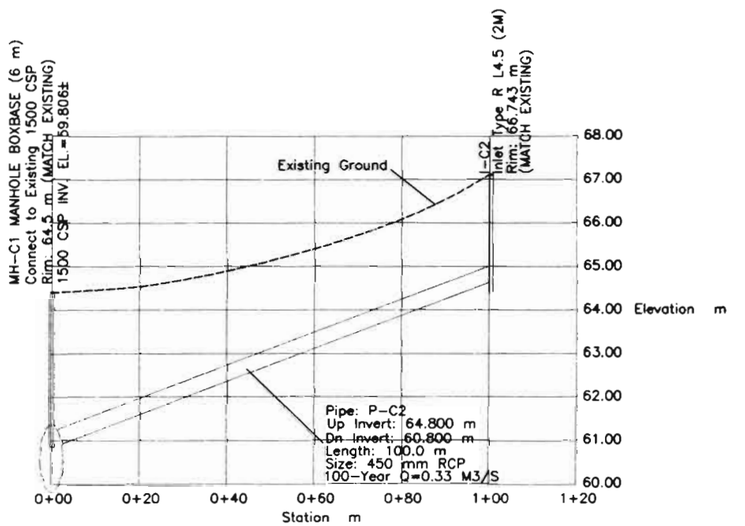

STORM SEWER LINE "C"

YOSEMITE STREET STA. 1+046, 11.5 LT. TO 1+146.611, 11.863 LT.

STORM SEWER PROFILES

NOTE: WHOLE NUMBERS INDICATE MILLIMETERS
DECIMAL NUMBERS INDICATE METERS

FELSBURG HOLT & ULLEVIG

C-470/YOSEMITE INTERCHANGE

STORM SEWER PROFILES

DATE	PROJECT NO	DESIGNED BY EL	SHEET NO. 1	DRAWING NO.
FEB 96	95-088	DRAWN BY SS	OF 2 SHEETS	SP-1
		CHECKED BY DB		

G:\35088\ACAD\A50B8420.dwg, L1, 02/19/96 at 14:57
COMPUTER GENERATED DRAWING DO NOT ALTER MANUALLY

AS CONSTRUCTED					
NO REVISIONS ☐	REVISED ☐	VOID ☐			

FEDERAL RD REGION NO.	DIVISION	PROJ. NO.	SHEET NO.	TOTAL SHEETS
VIII	COLORADO	CC 4701-082	84	

REVISIONS		

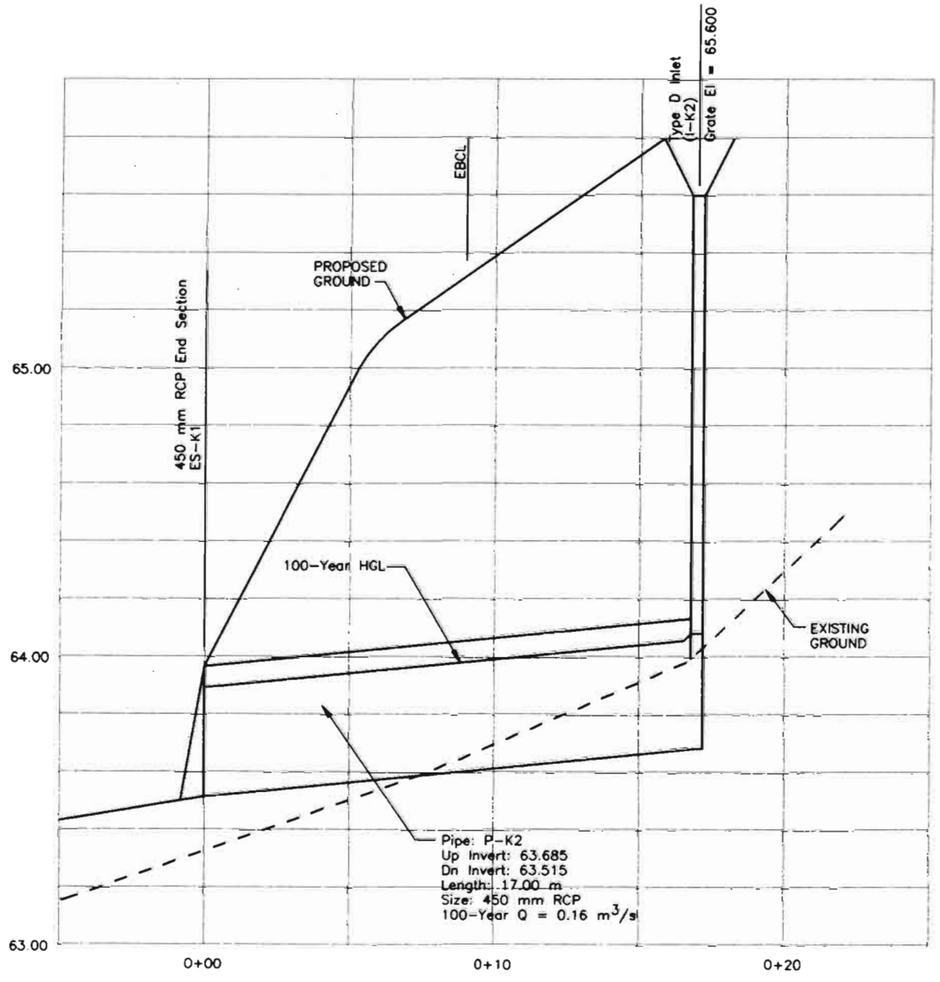

STORM SEWER LINE "K"

FROM STA. 1+529 RT. TO STA. 1+539.5 LT.

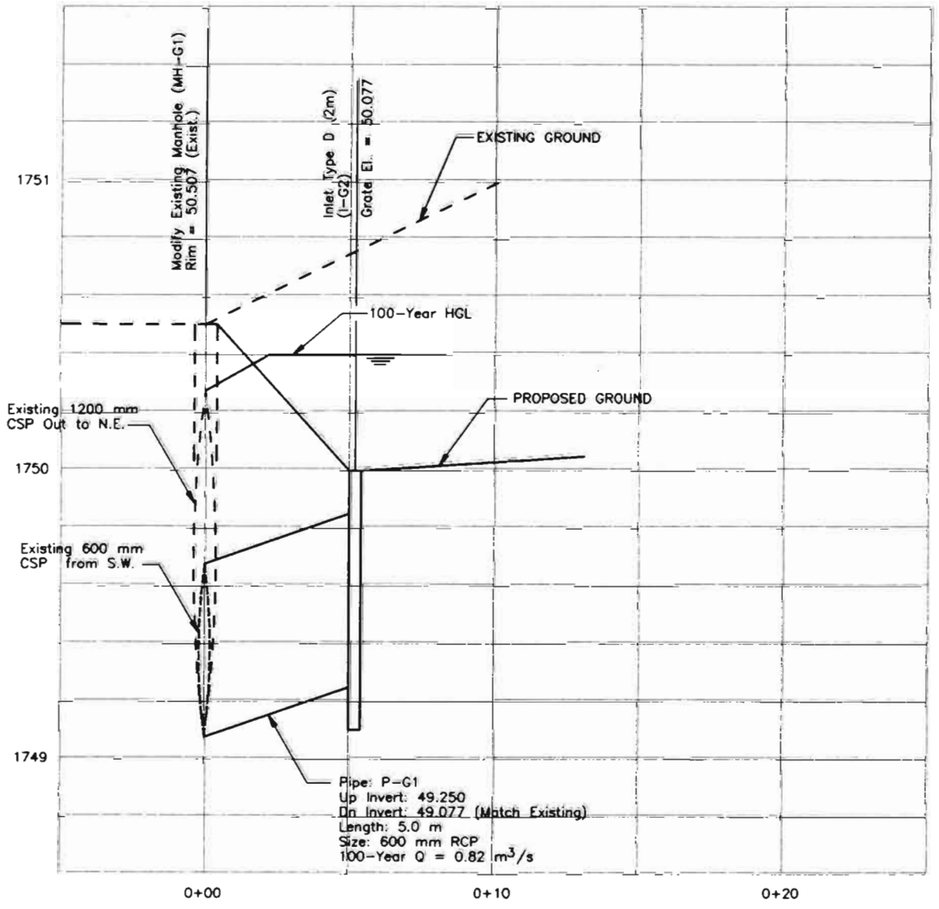

STORM SEWER LINE "G"

FROM STA. 0+667 TO 0+674 RT. EBCL

STORM SEWER PROFILES

NOTE: WHOLE NUMBERS INDICATE MILLIMETERS
DECIMAL NUMBERS INDICATE METERS

FELSBURG HOLT & ULLEVIG

C-470/YOSEMITE INTERCHANGE

STORM SEWER PROFILES

DATE	PROJECT No.	DESIGNED BY	SHEET NO.	DRAWING No.
Feb 96	95-088	DRAWN BY DS / CHECKED BY DB	2 OF 2 SHEETS	SP-2

G:\95088\ACAD\A50884.dwg, 1:1, 02/19/96 at 14:59
COMPUTER GENERATED DRAWING. DO NOT ALTER MANUALLY

STORMWATER MANAGEMENT PLAN – ADDITIONAL INFORMATION

Estimated Runoff coefficient (5–yr.)
Pre–construction: 0.09 Post–construction: 0.13

Existing data describing soil or quality of discharge: EMBANKMENT FILLS, CLAY LOAMS
AVERAGE EXISTING VEGETATIVE GROUND COVER IS 75%

Existing vegetation: 100% NATIVE GRASSES AND WEEDS

Proposed sequence for major activities, location of any other potential pollution source, areas used for storage of building materials, soils or wastes, and location of any dedicated asphalt or concrete batch plants: see water quality and erosion control specifications, and documents submitted by the contractor at the preconstruction conference.

100–year Flood plain boundaries: see bridge hydraulic information sheet (if existent).

Description of the construction activity, estimate of the total site area and of the area expected to undergo excavation, and name of the receiving water: see CDPS stormwater permit application.

Site map and construction site boundaries: see title sheet

Areas of cuts and fills and areas of soil disturbance: see plan and profile sheets and roadway cross sections.

Surface waters: see title sheet and bridge hydraulic information sheet (if existent)

Materials handling and spill prevention: see water quality specification (107.25).

Inspection and maintenance: see erosion control specifications (107.25 or 208).

Contract Document location of erosion control and stormwater quality management measures not referenced above nor included on the Stormwater Management Plan Sheet(s):

SEEDING NOTES

NATIVE SEEDING

Soil preparation, fertilizer, topsoil, seeding, mulching and mulch tackifier will be required for an estimated 3.517 hectares of disturbed area within the right–of–way limits which are not surfaced.
The following types and rates shall be used:

COMMON NAME	BOTANICAL NAME	kgs PLS/hectare
Blue grama v. Hachita	Bouteloua gracilis	1.1
Streambank wheatgrass v. Sodar	Elymus lanceolatus	5.6
Western wheatgrass v. Arriba	Poscopyrum smithii	7.8
Little bluestem v. Pastura	Schizachyrium scoparium	2.2
Sideoats grama v. Vaughn	Bouteloua curtipendula	1.1
Blanket flower	Gaillardia aristata	1.1
Blue flax	Linum perenne	0.6
Proirie coneflower	Ratibida columnifera	0.3
TOTAL		19.8

SEEDING APPLICATION: Drill seed 6.25 mm – 12.5 mm into topsoil.

MULCH REQUIREMENT AND APPLICATION: 3.4 m tons native hay per hectare mechanically crimped into topsoil in combination with a mulch tackifier per special provision 213 – Mulch Tackifier.

COMMERCIAL FERTILIZER	ANALYSIS (%)	KGS/HECTARE AVAILABLE
Nitrogen	18	50
Phosphorus	46	128
Potassium	0	

Placement of topsoil, seeding, and mulching will not be done in a single operation, but shall be completed as the work progresses. It is estimated that several mobilizations for topsoil, seeding, and mulching will be required and shall be included in the price of the work.

AS CONSTRUCTED

NO REVISIONS ☐ REVISED ☐ VOID ☐

FEDERAL RD REGION NO.	DIVISION	PROJ. NO.	SHEET NO.	TOTAL SHEETS
VIII	COLORADO	CC 4701–082	85	

REVISIONS

SUMMARY TABULATION OF EROSION CONTROL ITEMS

LOCATION	DIRECTION	SEEDING (NATIVE)	TOPSOIL *	MULCHING	MULCH TACKIFIER	EROSION BALES	SILT FENCE	SEDIMENT REMOVAL & DISPOSAL	STORM DRAIN INLET PROTECTION	RIPRAP LINED SWALE	
										RIPRAP (300 mm)	FILTER MATERIAL CLASS A
		HA	M^3	HA	KG	EACH	M	LS	EACH		
0+092 TO 0+220 WBCL	LEFT	0.081	85	0.081	9						
0+220 TO 0+570 WBCL/WBOR	LEFT	0.333	350	0.333	37						
0+317 TO 0+565 EBCL	RIGHT	0.167	175	0.167	18						
0+570 TO 0+930 WBOR	LEFT	0.405	456	0.405	45	SEE TABULATION ON NEXT SHEET	SEE TABULATION ON NEXT SHEET		SEE TABULATION ON NEXT SHEET	SEE TABULATION ON NEXT SHEET	SEE TABULATION ON NEXT SHEET
0+565 TO 0+916 EBCL	RIGHT	0.375	394	0.375	41						
0+930 TO 1+300 WBOR	LEFT	0.385	404	0.385	42						
0+916 TO 1+278 EBCL	RIGHT	0.184	193	0.184	20						
1+300 TO 1+660 WBOR	LEFT	0.431	452	0.431	47						
1+278 TO 1+632 EBCL/EBOR	RIGHT	0.295	310	0.295	32						
1+660 TO 1+854 WBOR	LEFT	0.315	330	0.315	35						
1+632 TO 1+875 EBOR	RIGHT	0.546	574	0.546	60						
TOTALS		3.517	3 723	3.517	386	265	1 845	1	5	22.5	7.5

AN "EROSION CONTROL SUPERVISOR (1–LUMP SUM)" WILL BE REQUIRED ON THIS PROJECT.
(SEE ITEM 208 "EROSION CONTROL" IN THE PROJECT STANDARD SPECIFICATIONS).

* CONTRACTORS SOURCE.

FELSBURG HOLT & ULLEVIG

C–470/YOSEMITE INTERCHANGE
STORMWATER MANAGEMENT PLAN AND TABULATION

DATE	PROJECT NO.	DESIGNED BY	DRAWN BY	CHECKED BY	SHEET NO. X	OF X SHEETS	DRAWING NO.
JAN 96	95–088						EC–4

C:\95088\ACAD\A5088404.dwg, 1:1, 01/12/96 at 12:46
COMPUTER GENERATED DRAWING DO NOT ALTER MANUALLY

AS CONSTRUCTED			
NO REVISIONS ☐	REVISED ☐	VOID ☐	

FEDERAL RD REGION NO.	DIVISION	PROJ. NO.	SHEET NO.	TOTAL SHEETS
VIII	COLORADO	CC 4701-082	86	

REVISIONS		

INLET PROTECTION DETAILS

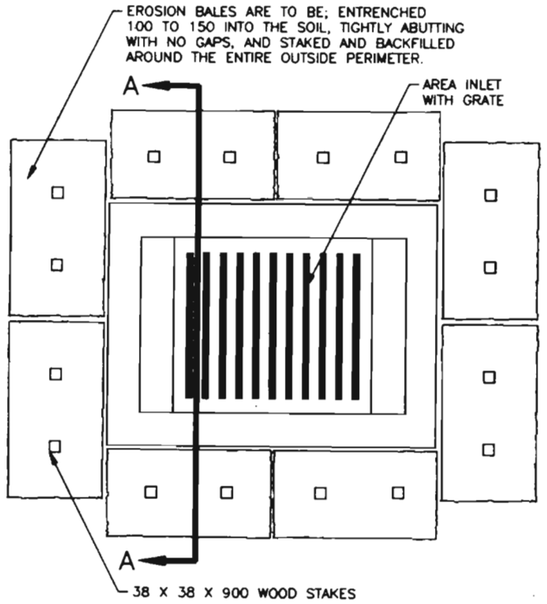

PLAN VIEW

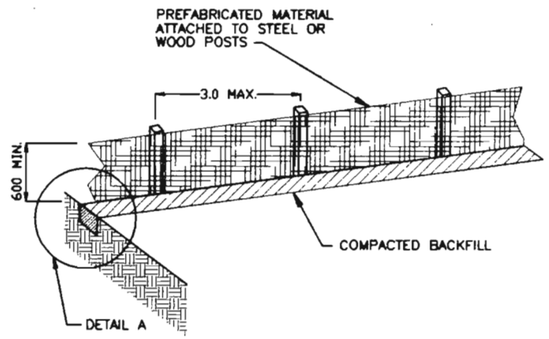

SILT FENCE DETAIL

NOT TO SCALE

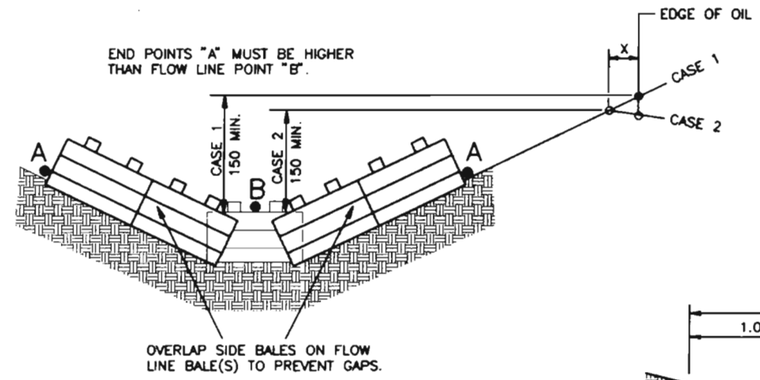

DITCH EROSION BALES

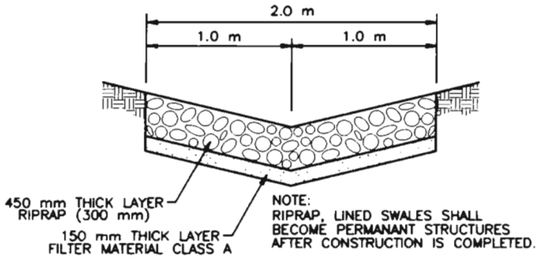

RIPRAP LINED SWALE

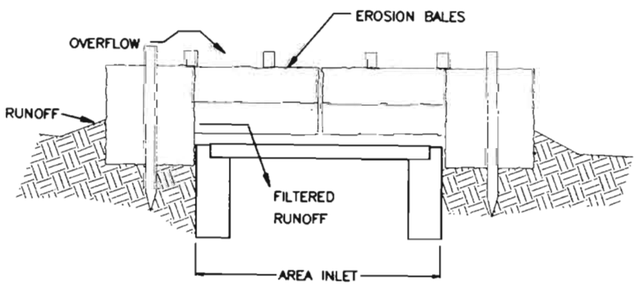

CROSS-SECTION AA

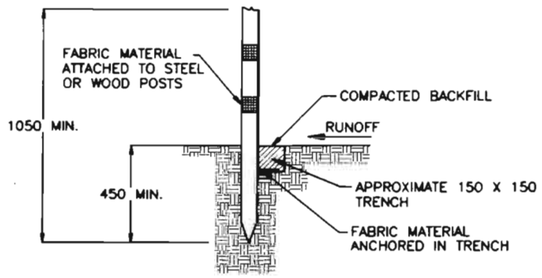

DETAIL A

NOT TO SCALE

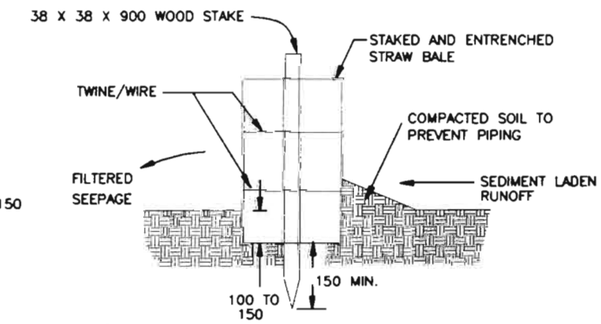

CROSS SECTION OF A PROPERLY INSTALLED STRAW BALE

STORM DRAIN INLET PROTECTION TABULATION *

LOCATION	SIDE	QUANTITY EACH
0+659 EBCL	RT	1
1+540 EBOR	LT	1
1+820 EBOR	LT	1
1+840 WBOR	RT	1
1+850 WBOR	LT	1
TOTAL		5

SILT FENCE TABULATION *

LOCATION	SIDE	QUANTITY M
0+092 TO 0+700 WBCL/WBOR	LT	615
0+317 TO 0+420 EBCL	RT	105
0+700 TO 1+260 WBOR	LT	625
1+300 TO 1+350 EBCL	RT	50
1+450 TO 1+850 EBOR	RT	400
1+053 TO 1+860 EBOR	LT	50
TOTAL		1 845

EROSION BALE TABULATION *

LOCATION	SIDE	QUANTITY EACH
0+450 TO 0+630 EBCL	RT	35
1+100 TO 1+300 WBOR	LT	35
0+700 TO 1+030 EBCL	RT	55
1+300 TO 1+824 WBOR	LT	90
1+570 TO 1+850 EBOR	LT	50
TOTAL		265

RIPRAP LINED SWALE TABULATION *

LOCATION	SIDE	QUANTITY (M3)	
		RIPRAP (300 mm)	FILTER MATERIAL CLASS A
0+900 EBCL	RT	9.0	3.0
1+340 EBCL	RT	9.0	3.0
1+830 WBCL	RT	4.5	1.5
TOTAL		22.5	7.5

* FOR INFORMATION ONLY - SEE PREVIOUS PAGE

FELSBURG HOLT & ULLEVIG

C-470/YOSEMITE INTERCHANGE

STORMWATER MANAGEMENT PLAN DETAILS

DATE	PROJECT NO.	DESIGNED BY	SHEET NO. 1	DRAWING NO.
JAN 96	95-088	DRAWN BY SS CHECKED BY DB	OF 1 SHEETS	EC-5

G:\95088\ACAD\A5088A05.dwg, 1:1, 01/12/98 at 13:21
COMPUTER GENERATED DRAWING. DO NOT ALTER MANUALLY

AS CONSTRUCTED		
NO REVISIONS	REVISED	VOID

FEDERAL RD REGION NO.	DIVISION	PROJ. NO.	SHEET NO.	TOTAL SHEETS
VIII	COLORADO	CC 4701-082	87	

REVISIONS		

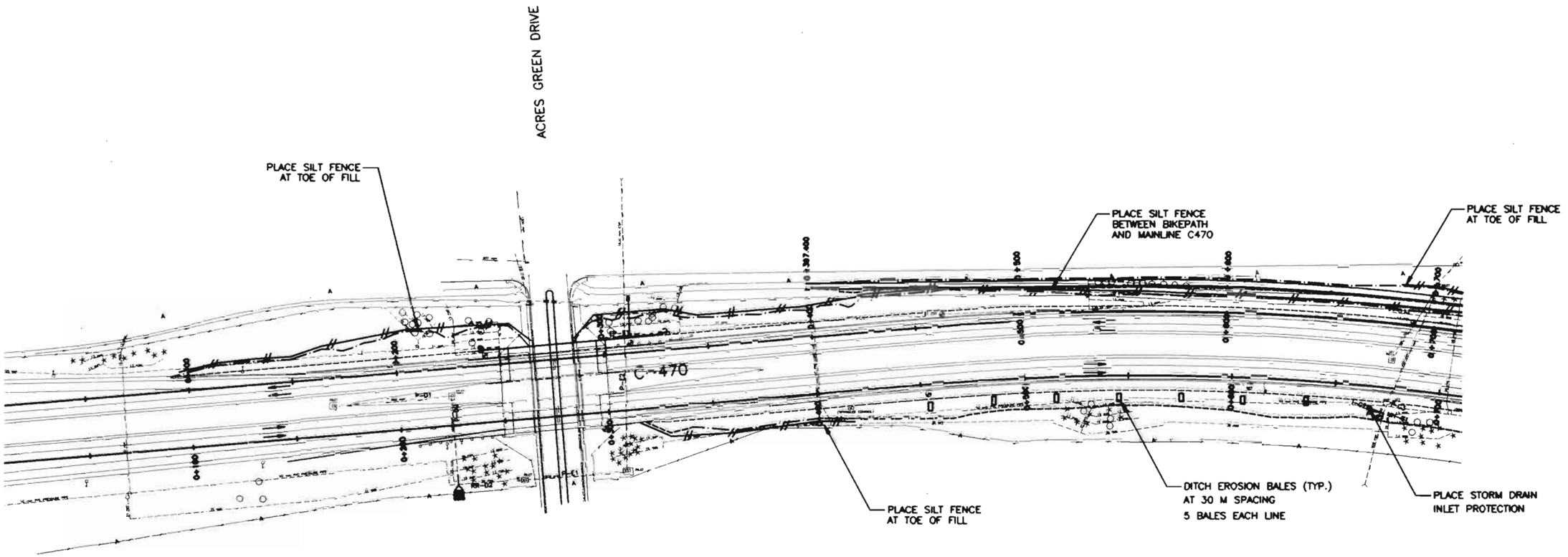

LEGEND

- EROSION BALES
- SILT FENCE
- TOP OF CUT
- TOE OF FILL

NOTE: WHOLE NUMBERS INDICATE MILLIMETERS
DECIMAL NUMBERS INDICATE METERS.

N

Original Scale 1:1000

FELSBURG HOLT & ULLEVIG

C-470/YOSEMITE INTERCHANGE

EROSION CONTROL PLAN

DATE	PROJECT NO.	DESIGNED BY EL / DRAWN BY / CHECKED BY	SHEET NO. / OF SHEETS	DRAWING NO.
JAN 96	95-088			EC-1

COMPUTER GENERATED DRAWING DO NOT ALTER MANUALLY

AS CONSTRUCTED			
NO REVISIONS ☐	REVISED ☐	VOID ☐	

FEDERAL RD REGION NO.	DIVISION	PROJ. NO.	SHEET NO.	TOTAL SHEETS
VIII	COLORADO	CC 4701-082	88	

REVISIONS		

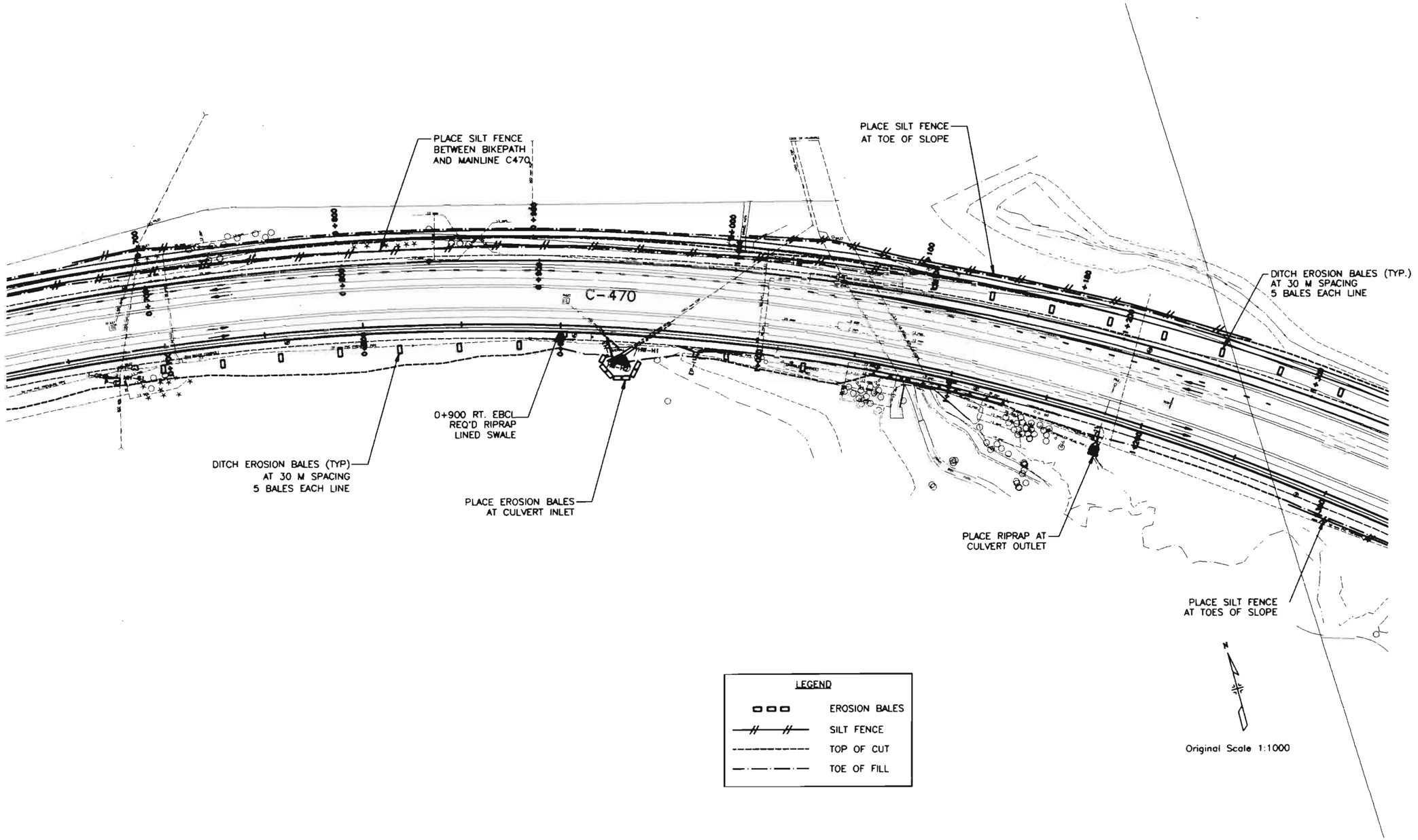

LEGEND

- EROSION BALES
- SILT FENCE
- TOP OF CUT
- TOE OF FILL

NOTE: WHOLE NUMBERS INDICATE MILLIMETERS
DECIMAL NUMBERS INDICATE METERS.

FELSBURG HOLT & ULLEVIG

C-470/YOSEMITE INTERCHANGE

EROSION CONTROL PLAN

DATE	PROJECT NO.	DESIGNED BY EL	SHEET NO.	DRAWING NO.
JAN 96	95-088	DRAWN BY CHECKED BY	OF SHEETS	EC-2

G:\95088\ACAD\#5088A02.dwg, 11, 01/12/96, at 14:54
COMPUTER GENERATED DRAWING. DO NOT ALTER MANUALLY

AS CONSTRUCTED

NO REVISIONS ☐ REVISED ☐ VOID ☐

FEDERAL RD REGION NO.	DIVISION	PROJ. NO.	SHEET NO.	TOTAL SHEETS
VIII	COLORADO	CC 4701-082	89	

REVISIONS		

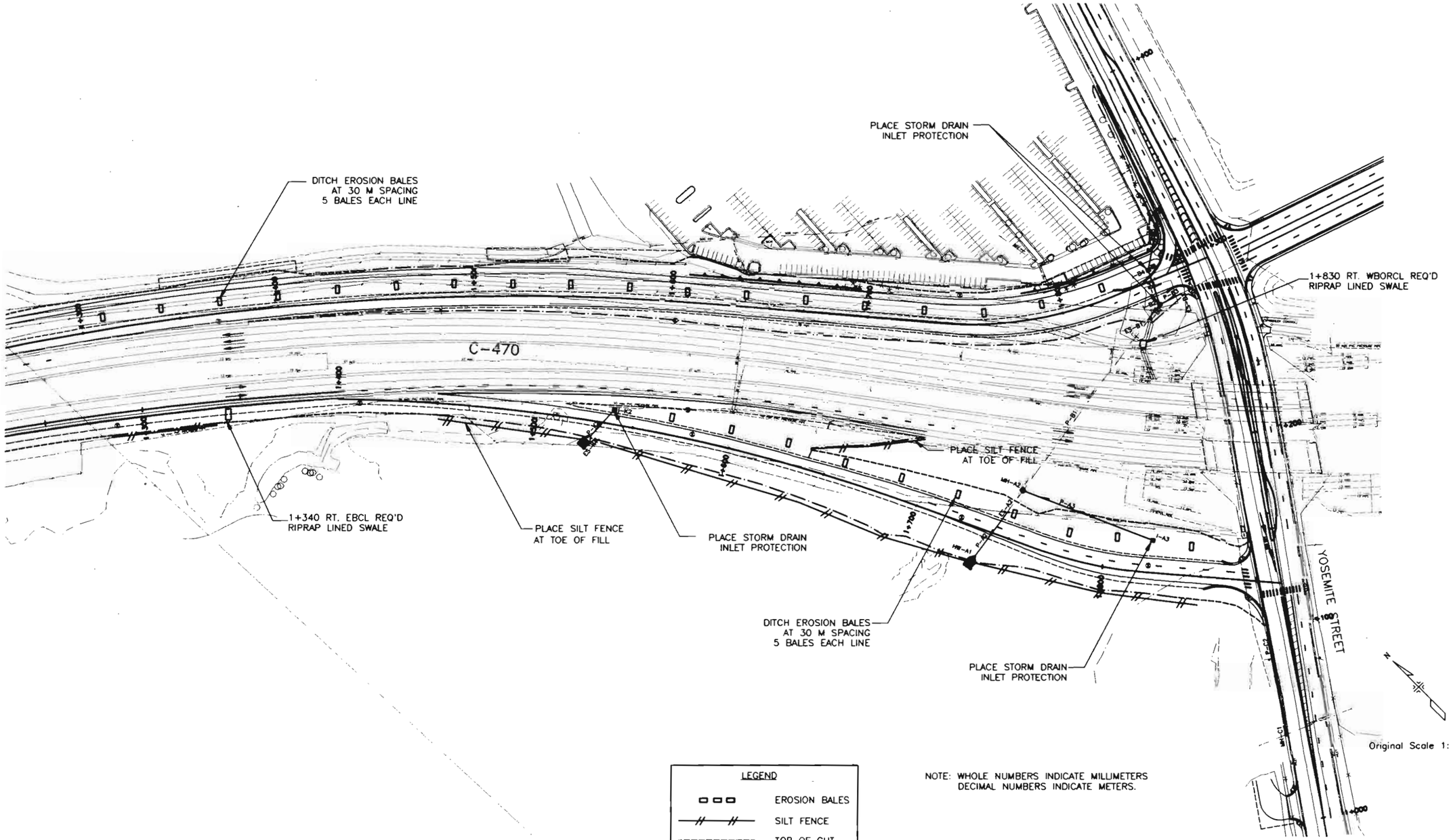

Original Scale 1:1000

LEGEND

- EROSION BALES
- SILT FENCE
- TOP OF CUT
- TOE OF FILL

NOTE: WHOLE NUMBERS INDICATE MILLIMETERS
DECIMAL NUMBERS INDICATE METERS.

FELSBURG HOLT & ULLEVIG

C-470/YOSEMITE INTERCHANGE

EROSION CONTROL PLAN

DATE	PROJECT NO	DESIGNED BY	DRAWN BY	CHECKED BY	SHEET NO.	DRAWING NO
JAN 96	95-088	EL	SS	DB	X OF X SHEETS	EC-3

C:\95088\ACAD\A5108405.dwg, 1:1, 01/12/96 at 15:02

COMPUTER GENERATED DRAWING. DO NOT ALTER MANUALLY

AS CONSTRUCTED					
NO REVISIONS		REVISED		VOID	

FEDERAL RD REGION NO.	DIVISION	PROJ. NO.	SHEET NO.	TOTAL SHEETS
VIII	COLORADO	CC 4701-082	90	

REVISIONS		

PLANTING TABULATION

ITEM	DESCRIPTION	UNITS	TOTAL QUANS.	L-1	L-2	L-3	L-4	L-5	L-6	SHEET TOTAL
	MULCHING (WOOD CHIP) FOR INFORMATION ONLY	M3	267.1							
214	DECIDUOUS TREE (50MM CALIPER)	EA.	34							
	CATALPA (CATALPA SECIOSA)			3	3		3		7	16
	PATMORE ASH (FRAXINUS PENNSYLVANICA 'PATMORE')				5			8		13
	AUTUMN PURPLE ASH (F. PENN. 'AUTUMN PURPLE')								5	5
214	DECIDUOUS SHRUB (NO. 5 CONTAINER)	EA.	129							
	GAMBEL OAK (QUERCUS GAMBELII)				12					12
	THREELEAF SUMAC (RHUS TRILOBATA)				12				31	43
	WAX CURRANT (RIBES CEREUM)								30	30
	MOUNTAIN MAHAGONY (CERCOCARPUS MONTANUS)								44	44
214	EVERGREEN TREE (2.4 M) (BALL & BURLAP)	EA.	65							
	PONDEROSA PINE (PINUS PONDEROSA)				8	7	6		20	41
	PINON PINE (PINUS CEMBROIDES EDULIS)							13	11	24
214	EVERGREEN TREE (3 M) (BALL AND BURLAP)	EA.	18				3		15	18
215	TRANSPLANT TREE (38 MM TO 75 MM CALIPER)	EA.	13		2	11				13

TOPSOIL IS FROM NON-DESIGNATED SOURCE

REMOVAL OF TREES AND SHRUBS IS COVERED UNDER CLEARING AND GRUBBING.

TRANSPLANTING IS TO BE ACCOMPLISHED AT THE BEGINNING OF THE JOB PRIOR TO JUNE 1, 1996.

PLANTING IS TO BE ACCOMPLISHED BETWEEN SEPTEMBER 15 AND OCTOBER 15, 1996

TRANSPLANTED TREES ARE TO BE WATERED ONCE PER MONTH DURING THE CONSTRUCTION PERIOD.

NO BARE ROOT MATERIAL WILL BE ACCEPTED.

PRIOR TO INSTALLATION, ALL TREE AND SHRUB LOCATIONS SHALL BE STAKED BY THE CONTRACTOR FOR APPROVAL BY THE ENGINEER.

FRESH WOOD CHIP MULCH 150 MM THICK SHALL BE REQUIRED FOR PLANTING BASINS, AND SHALL BE INCLUDED IN COST OF TRANSPLANTING ITEMS.

SOIL CONDITIONER (COMPOSTED ASPEN HUMUS) SHALL BE ADDED TO BACKFILL FOR TREES AND SHRUBS IN ACCORDANCE WITH SUBSECTION 214.03, AND REVISION OF SECTION 214. SOIL CONDITIONER SHALL BE INCLUDED IN THE PRICE OF THE WORK.

ALL WIRE BASKETS ON BALLED AND BURLAPPED TREES SHALL BE REMOVED PRIOR TO BACKFILLING OR AS DIRECTED BY THE ENGINEER.

SYMBOL LEGEND

CONIFER TREES
- PROPOSED
- EXIST. TO REMOVE
- EXIST. TO PROTECT

DECIDUOUS TREES
- PROPOSED
- EXIST. TO REMOVE
- EXIST. TO PROTECT
- PROPOSED SHRUB
- TEMPORARY FENCE

TUPA ASSOCIATES, INC.
DESIGN PLANNING RESEARCH

FELSBURG HOLT & ULLEVIG

C-470/YOSEMITE INTERCHANGE

LANDSCAPING TABULATIONS AND GENERAL NOTES

DATE	PROJECT NO.	DESIGNED BY / DRAWN BY / CHECKED BY	SHEET NO. / OF SHEETS	DRAWING NO.
FEB 96	95-088			L-0

G:\95088\LSCAPE\L-0.dwg, 1:1, 02/19/96 at 15:20

COMPUTER GENERATED DRAWING DO NOT ALTER MANUALLY

AS CONSTRUCTED					
NO REVISIONS		REVISED		VOID	

FEDERAL RD REGION NO.	DIVISION	PROJ. NO.	SHEET NO.	TOTAL SHEETS
VIII	COLORADO	CC 4701-082	91	

REVISIONS

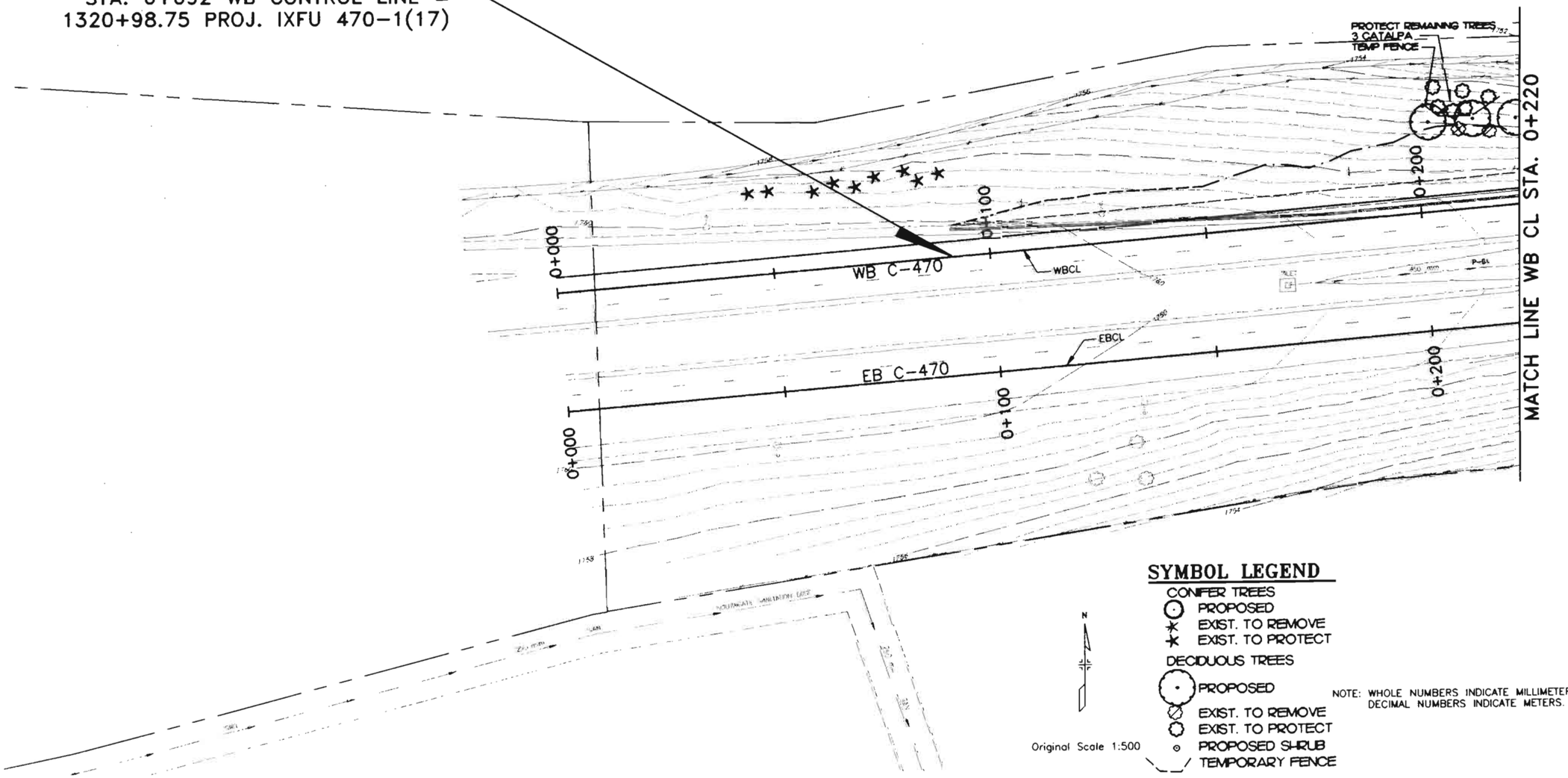

NOTE: WHOLE NUMBERS INDICATE MILLIMETERS
DECIMAL NUMBERS INDICATE METERS.

TUPA ASSOCIATES, INC.
DESIGN PLANNING RESEARCH

FELSBURG HOLT & ULLEVIG

C-470/YOSEMITE INTERCHANGE

LANDSCAPE PLAN SHEETS
C-470 WBCL STA. 0+092 TO STA. 0+220

DATE	PROJECT NO.	DESIGNED BY MJT	SHEET NO. 1	DRAWING NO.
FEB 96	95-088	DRAWN BY MJT CHECKED BY MJT	OF 8 SHEETS	L-1

COMPUTER GENERATED DRAWING DO NOT ALTER MANUALLY

AS CONSTRUCTED					
NO REVISIONS		REVISED		VOID	

FEDERAL RD REGION NO.	DIVISION	PROJ. NO.	SHEET NO.	TOTAL SHEETS
VIII	COLORADO	CC 4701-082	92	

REVISIONS

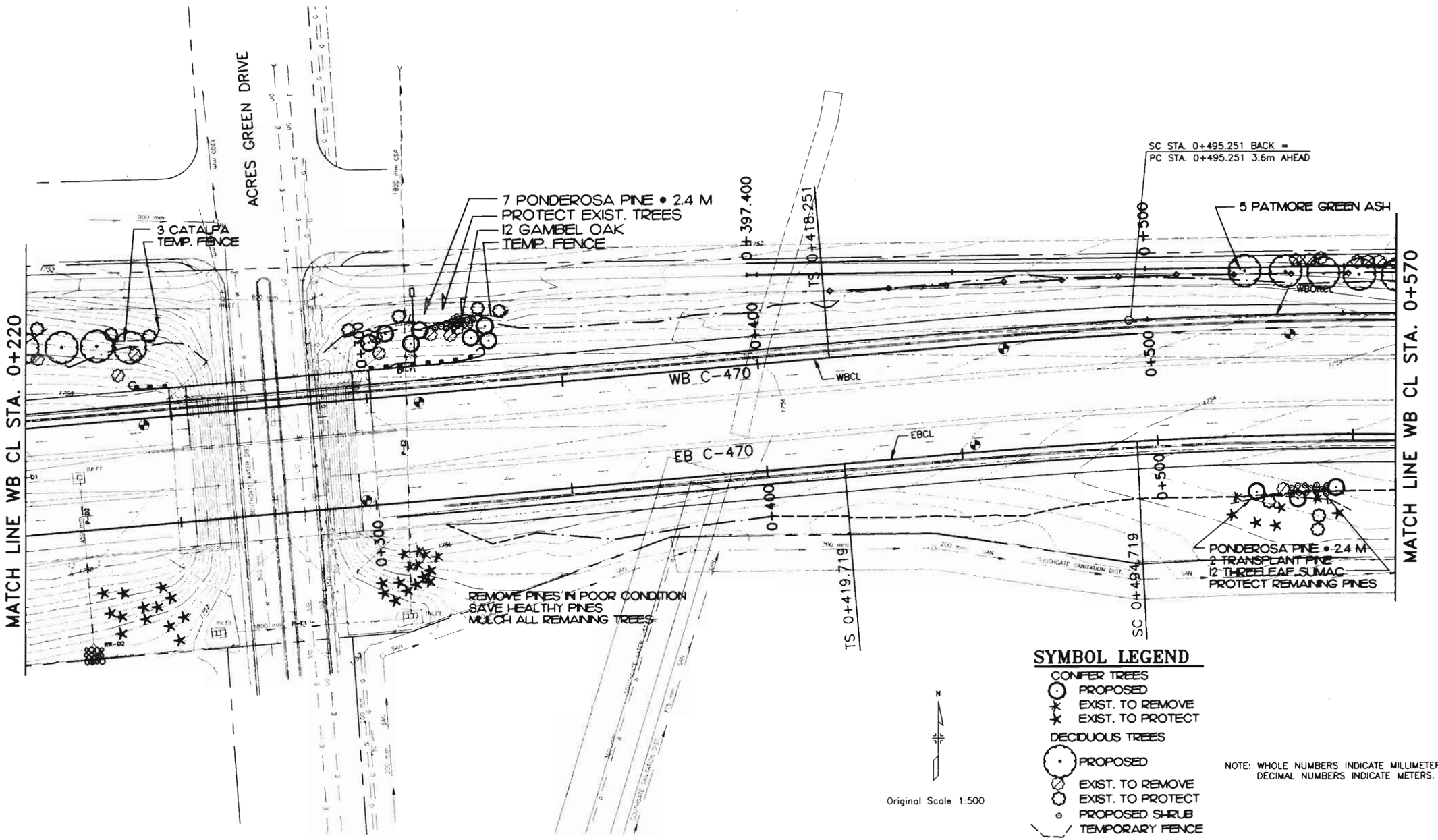

NOTE: WHOLE NUMBERS INDICATE MILLIMETERS
DECIMAL NUMBERS INDICATE METERS.

TUPA ASSOCIATES, INC.
DESIGN PLANNING RESEARCH
12487 E. Amherst Cr., Aurora, CO 80014 (303)470-0470

FELSBURG HOLT & ULLEVIG

C-470/YOSEMITE INTERCHANGE

LANDSCAPE PLAN SHEET
C-470 WBCL STA. 0+220 TO STA. 0+570

DATE	PROJECT NO.	DESIGNED BY MJT / DRAWN BY MJT / CHECKED BY MJT	SHEET NO. 2 OF 8 SHEETS	DRAWING NO.
FEB 96	95-088			L-2

G:\95088\LSCAPE\L-2.dwg, 1:1, 02/14/96 at 09:00

COMPUTER GENERATED DRAWING DO NOT ALTER MANUALLY

AS CONSTRUCTED				
NO REVISIONS	REVISED	VOID		

FEDERAL RD REGION NO.	DIVISION	PROJ. NO.	SHEET NO.	TOTAL SHEETS
VIII	COLORADO	CC 4701-082	93	

REVISIONS		

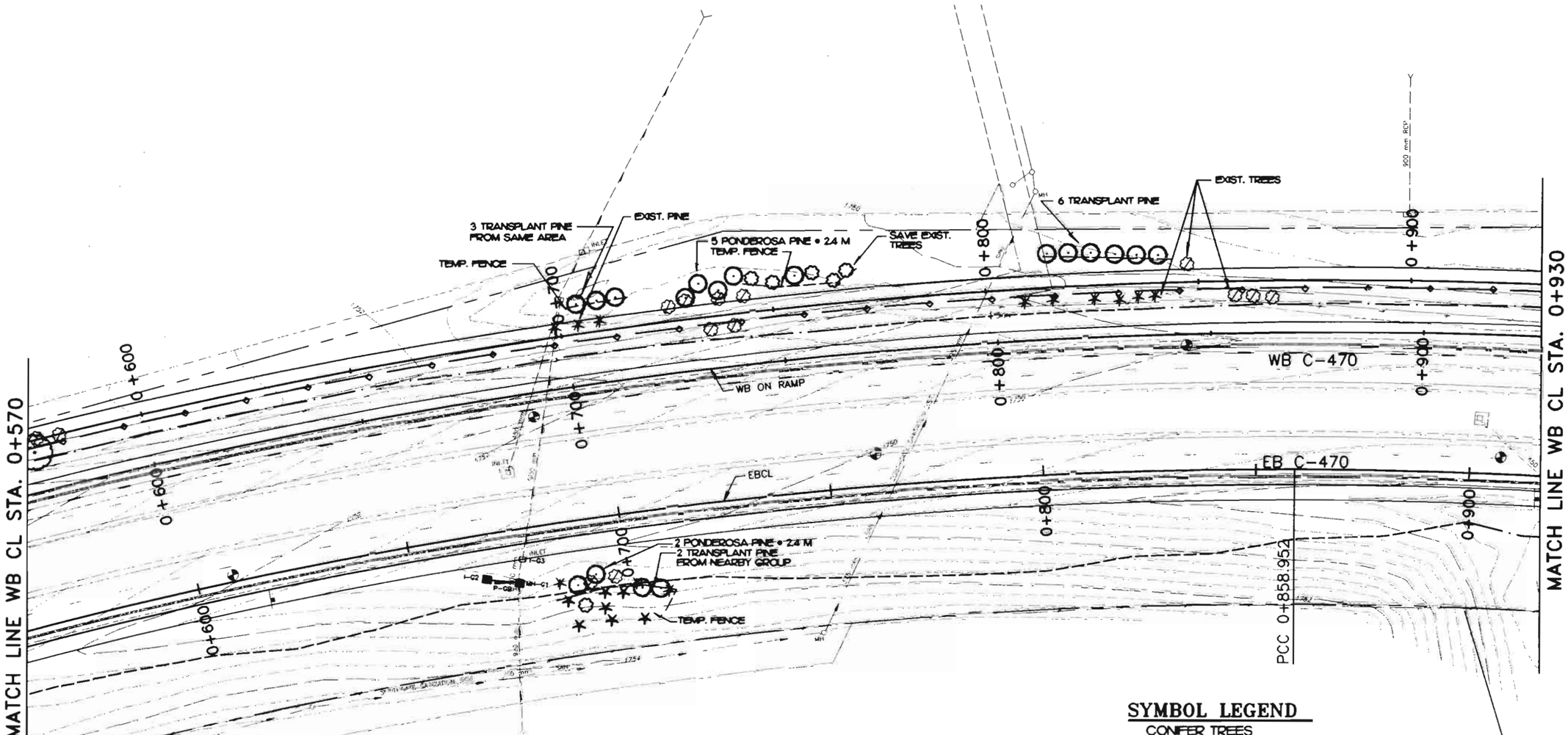

SYMBOL LEGEND

CONIFER TREES
- PROPOSED
- EXIST. TO REMOVE
- EXIST. TO PROTECT

DECIDUOUS TREES
- PROPOSED
- EXIST. TO REMOVE
- EXIST. TO PROTECT
- PROPOSED SHRUB
- TEMPORARY FENCE

NOTE: WHOLE NUMBERS INDICATE MILLIMETERS
DECIMAL NUMBERS INDICATE METERS.

Original Scale 1:500

TUPA ASSOCIATES, INC.
DESIGN PLANNING RESEARCH

FELSBURG HOLT & ULLEVIG

C-470/YOSEMITE INTERCHANGE

LANDSCAPE PLAN SHEET
C-470 WBCL STA. 0+570 TO STA. 0+930

DATE	PROJECT NO.	DESIGNED BY	DRAWN BY	CHECKED BY	SHEET NO.	OF SHEETS	DRAWING NO.
FEB 96	95-088	MJT	MJT	MJT	3		L-3

G:\95088\DGAPE\5-3.dwg, 1.5, 07/24/96 at 09:03

COMPUTER GENERATED DRAWING DO NOT ALTER MANUALLY

AS CONSTRUCTED			
NO REVISIONS ☐	REVISED ☐	VOID ☐	

FEDERAL RD REGION NO.	DIVISION	PROJ. NO.	SHEET NO.	TOTAL SHEETS
VIII	COLORADO	CC 4701-082	94	

REVISIONS		

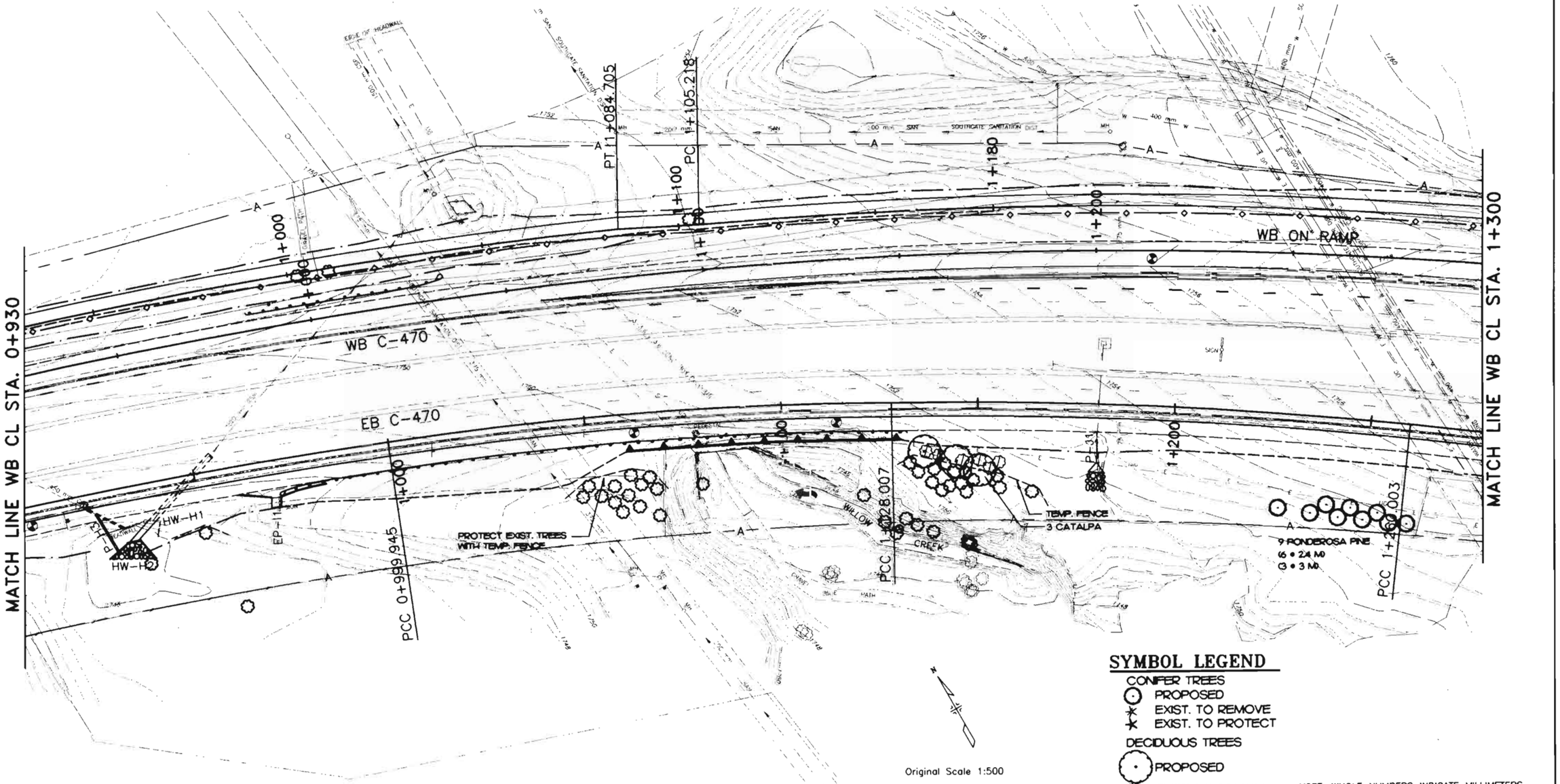

Original Scale 1:500

SYMBOL LEGEND

CONIFER TREES
- PROPOSED
- EXIST. TO REMOVE
- EXIST. TO PROTECT

DECIDUOUS TREES
- PROPOSED
- EXIST. TO REMOVE
- EXIST. TO PROTECT

- PROPOSED SHRUB
- TEMPORARY FENCE

NOTE: WHOLE NUMBERS INDICATE MILLIMETERS
DECIMAL NUMBERS INDICATE METERS.

TUPA ASSOCIATES, INC.
PLANNING RESEARCH
12487 E. Amherst Cr., Aurora, CO 80014 (303)478-9470

FELSBURG HOLT & ULLEVIG

C-470/YOSEMITE INTERCHANGE

LANDSCAPE PLAN SHEET
C-470 WBCL STA. 0+930 TO STA. 1+300

DATE	PROJECT NO.	DESIGNED BY MJT	SHEET NO. 4	DRAWING NO.
FEB 96	95-088	DRAWN BY MJT	OF 8 SHEETS	L-4
		CHECKED BY MJT		

COMPUTER GENERATED DRAWING DO NOT ALTER MANUALLY

AS CONSTRUCTED					
NO REVISIONS		REVISED		VOID	

FEDERAL RD REGION NO.	DIVISION	PROJ. NO.	SHEET NO.	TOTAL SHEETS
VIII	COLORADO	CC 4701-082	95	

REVISIONS

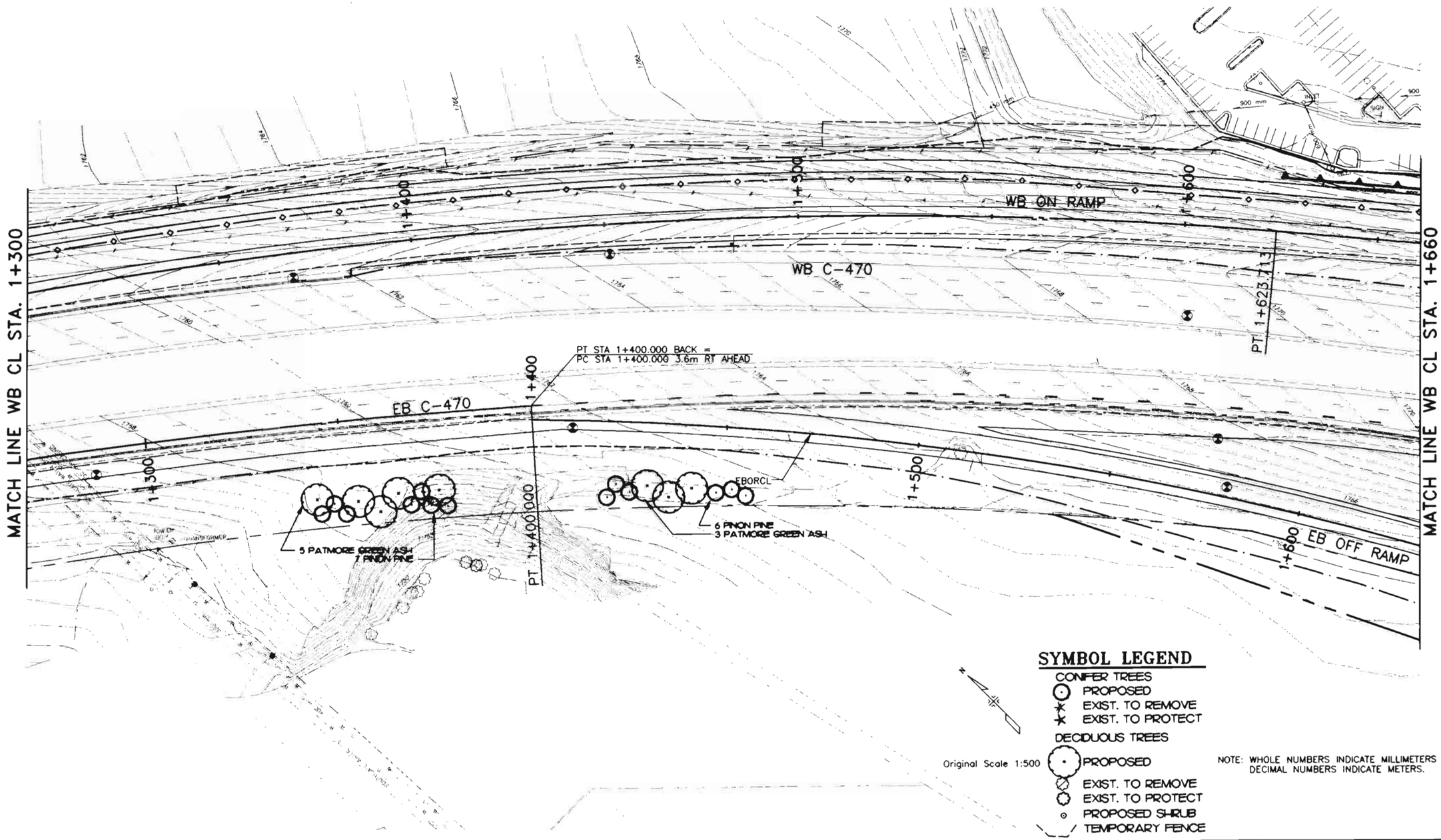

SYMBOL LEGEND

CONIFER TREES
- PROPOSED
- EXIST. TO REMOVE
- EXIST. TO PROTECT

DECIDUOUS TREES
- PROPOSED
- EXIST. TO REMOVE
- EXIST. TO PROTECT
- PROPOSED SHRUB
- TEMPORARY FENCE

Original Scale 1:500

NOTE: WHOLE NUMBERS INDICATE MILLIMETERS
DECIMAL NUMBERS INDICATE METERS.

TUPA ASSOCIATES, INC.
DESIGN PLANNING RESEARCH
Amherst Cr., Aurora, CO 80014 (303)478-9478

FELSBURG HOLT & ULLEVIG

C-470/YOSEMITE INTERCHANGE

LANDSCAPE PLAN SHEET
C-470 WBCL STA. 1+300 TO STA. 1+660

DATE	PROJECT NO.	DESIGNED BY MJT / DRAWN BY MJT / CHECKED BY MJT	SHEET NO. 5 OF 8 SHEETS	DRAWING NO.
FEB 96	95-088			L-5

G:\95088\LSCAPE\L-5.dwg, 1:1, 02/14/96 at 09:20

COMPUTER GENERATED DRAWING DO NOT ALTER MANUALLY

AS CONSTRUCTED		
NO REVISIONS	REVISED	VOID

FEDERAL RD REGION NO.	DIVISION	PROJ. NO.	SHEET NO.	TOTAL SHEETS
VIII	COLORADO	CC 4701-082	96	

REVISIONS		

MATCH LINE WB CL STA. 1+660

NOTE: WHOLE NUMBERS INDICATE MILLIMETERS
DECIMAL NUMBERS INDICATE METERS.

TUPA ASSOCIATES, INC.
DESIGN PLANNING RESEARCH
12457 E. Amherst Cr., Aurora, CO 80014 (303)478-9470

FELSBURG
HOLT &
ULLEVIG

C-470/YOSEMITE INTERCHANGE

LANDSCAPE PLAN SHEETS
C-470 WBCL STA. 1+660 TO STA. 1+878.735

DATE	PROJECT NO.	DESIGNED BY MJT / DRAWN BY MJT / CHECKED BY MJT	SHEET NO. 6 OF 8 SHEETS	DRAWING NO.
FEB 96	95-088			L-6

COMPUTER GENERATED DRAWING DO NOT ALTER MANUALLY

AS CONSTRUCTED			
NO REVISIONS ☐	REVISED ☐	VOID ☐	

FEDERAL RD REGION NO.	DIVISION	PROJ. NO.	SHEET NO.	TOTAL SHEETS
VIII	COLORADO	CC 4701-082	97	

REVISIONS		

SUMMARY OF IRRIGATION MATERIAL QUANTITIES C-470 / YOSEMITE

ITEM NO.	SYMBOL	DESCRIPTION	UNIT	REMARKS / SHEET NO:	QUANTITIES 1	2	3	4	5	6	TOTAL
619		DN32 COPPER PIPE	METERS			3		3			6
619		DN15 PLASTIC PIPE	METERS		500	2200	1100	1400	700	2100	8000
619		DN25 PLASTIC PIPE	METERS		70	60	50	40	50	60	330
619		DN50 PLASTIC PIPE	METERS		338	661	720	740	744	377	3580
619		DN80 PLASTIC PIPE	METERS					70			70
619		DN100 PLASTIC PIPE	METERS	(SLEEVES)			8	40	166	20	234
623		HOSE SWIVEL	EACH							6	6
623		HOSE BIB	EACH							6	6
623	⊕	DN25 EMITTER VALVE ASSEMBLY	EACH		1	6	3	3	1	5	19
623	▪	DN15 FLUSH UNIT	EACH		1	7	7	5	2	8	30
623		DN15 AIR RELIEF UNIT	EACH		1	6	3	3	1	5	19
623	⊠	DN32 BACKFLOW PREVENTER	EACH			1		1			2
623		DN25 DRAIN VALVE	EACH		2	4	4	3	4	2	19
623		CONTROL WIRE 24 VOLT	METERS		2300	2700	4200	5500	4250	2000	20950
623		POWER SOURCE WIRE	METERS		115			100			215
623	△	DN25 QUICK-COUPLER VALVE	EACH		2	6	3	4	1	3	19
623	⋈	DN50 GATE VALVE	EACH		1	2	2	5	1		11
623	Ⓐ	12 STATION AUTOMATIC CONTROLLER	EACH					1			1
623	ⒷⒸ	8 STATION AUTOMATIC CONTROLLER	EACH		1			1			2
623		18 STATION AUTOMATIC CONTROLLER (FURNISH ONLY)	EACH	DELIVER TO PROJECT ENGINEER				1			1

NOTES

1. DESIGN IS BASED ON A MINIMUM AREA PRESSURE OF 450 kPa. CONTRACTOR SHALL VERIFY PRESSURE AND NOTIFY OWNERS' REPRESENTITIVE OF DISCREPENCIES.

2. INSTALL AN AIR RELIEF VALVE AT THE HIGH POINT OF EACH ZONE.

3. ALL UNIT PRICES SHALL INCLUDE ALL INCIDENTAL COMPONENTS AS SHOWN IN DETAIL DRAWINGS UNLESS A SEPARATE PAY ITEM HAS BEEN SPECIFICALLY REFERENCED.

4. USE EXISTING PIPE AND SLEEVES LOCATED UNDER C-470.

5. INCLUDE ALL COMPONENTS DESCRIBED IN SECTION 623.04 IN CONTROLLER UNIT PRICE.

6. THE PRIMARY RESPONSIBILITY OF MAINTAINING THE ORIGINAL DESIGN INTENT RESTS WITH THE SYSTEM OPERATOR. WHILE THE DESIGN INTENT IS NOT LISTED IN EVERY SPECIFIC DETAIL CHANGES SHOULD BE MADE WITHIN THE ORIGINAL DESIGN CONTEXT. THE OPERATOR SHOULD BE AWARE THAT ALL DESIGN DECISIONS WERE DELIBERATE AND TO CHANGING THE SYSTEM WILL UPSET THE WATER MANAGEMENT PROGRAM.

7. ELIMINATE PRESSURE REDUCING VALVES ON ZONES A-7 THRU A-10 AND C-5 & 6.

CALL UTILITY NOTIFICATION CENTER OF COLORADO
1-800-922-1987
OR **534-6700** IN METRO DENVER
CALL 2-BUSINESS DAYS IN ADVANCE BEFORE YOU DIG, GRADE, OR EXCAVATE FOR THE MARKING OF UNDERGROUND MEMBER UTILITIES.

Keesen Water Management, Inc.
420 South Marion Parkway, Suite 1502
Denver, Colorado 80209
Phone (303) 698-7711

FELSBURG HOLT & ULLEVIG

C-470/YOSEMITE INTERCHANGE
TABULATION OF QUANTITIES

DATE	PROJECT NO.	DESIGNED BY LEK	DRAWN BY LEK	CHECKED BY LEK	SHEET NO. 8	OF 8 SHEETS	DRAWING NO. I-8
FEB 96	95-088						

COMPUTER GENERATED DRAWING DO NOT ALTER MANUALLY

AS CONSTRUCTED					
NO REVISIONS		REVISED		VOID	

FEDERAL RD REGION NO.	DIVISION	PROJ. NO.	SHEET NO.	TOTAL SHEETS
VIII	COLORADO	CC 4701-082	98	

REVISIONS

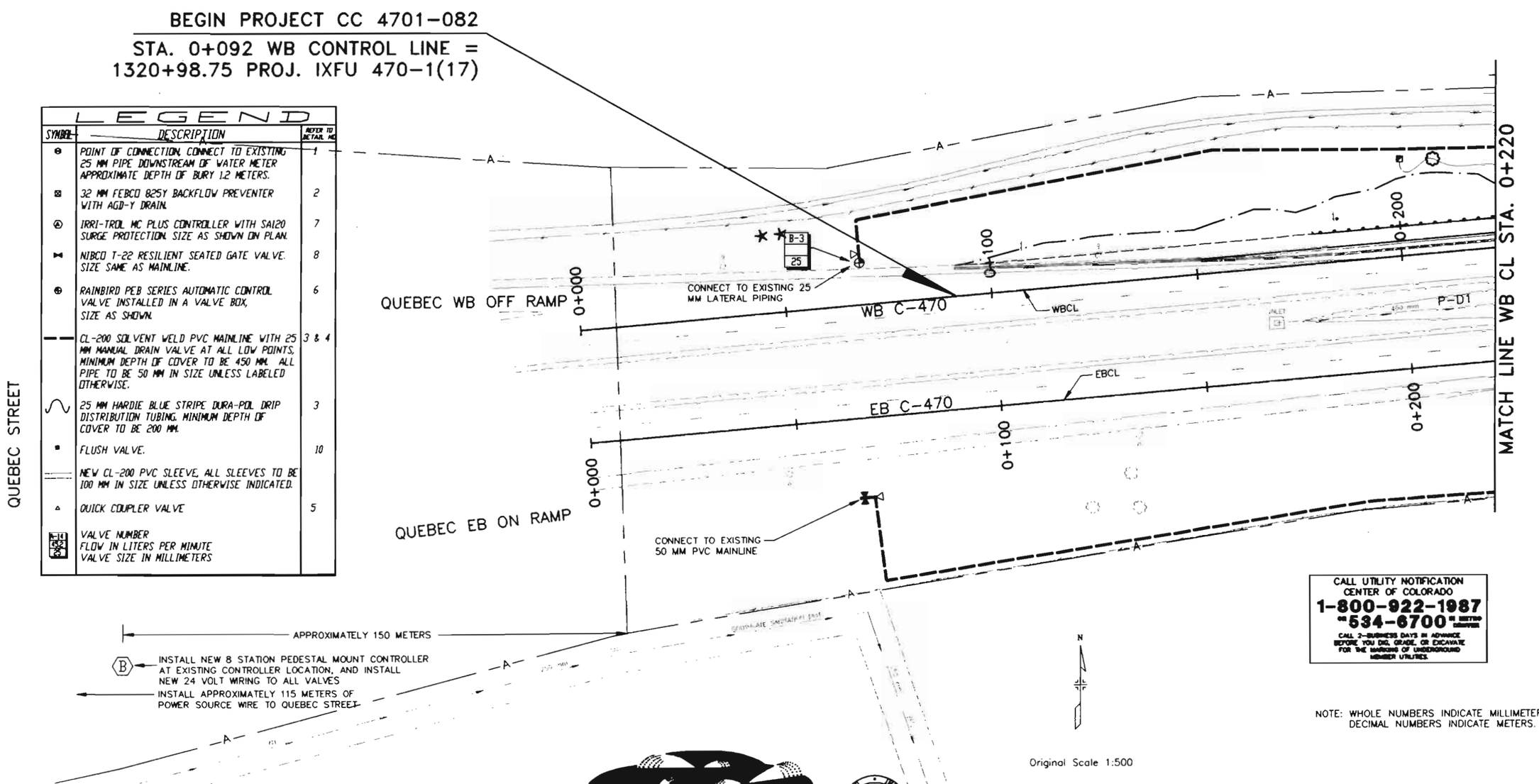

LEGEND

SYMBOL	DESCRIPTION	REFER TO DETAIL NO.
	POINT OF CONNECTION, CONNECT TO EXISTING 25 MM PIPE DOWNSTREAM OF WATER METER APPROXIMATE DEPTH OF BURY 1.2 METERS.	1
	32 MM FEBCO 825Y BACKFLOW PREVENTER WITH AGD-Y DRAIN.	2
	IRRI-TROL MC PLUS CONTROLLER WITH SA120 SURGE PROTECTION. SIZE AS SHOWN ON PLAN.	7
	NIBCO T-22 RESILIENT SEATED GATE VALVE. SIZE SAME AS MAINLINE.	8
	RAINBIRD PEB SERIES AUTOMATIC CONTROL VALVE INSTALLED IN A VALVE BOX, SIZE AS SHOWN.	6
	CL-200 SOLVENT WELD PVC MAINLINE WITH 25 MM MANUAL DRAIN VALVE AT ALL LOW POINTS, MINIMUM DEPTH OF COVER TO BE 450 MM. ALL PIPE TO BE 50 MM IN SIZE UNLESS LABELED OTHERWISE.	3 & 4
	25 MM HARDIE BLUE STRIPE DURA-POL DRIP DISTRIBUTION TUBING. MINIMUM DEPTH OF COVER TO BE 200 MM.	3
	FLUSH VALVE.	10
	NEW CL-200 PVC SLEEVE, ALL SLEEVES TO BE 100 MM IN SIZE UNLESS OTHERWISE INDICATED.	
	QUICK COUPLER VALVE	5
	VALVE NUMBER FLOW IN LITERS PER MINUTE VALVE SIZE IN MILLIMETERS	

CALL UTILITY NOTIFICATION CENTER OF COLORADO
1-800-922-1987
or 534-6700 IN METRO DENVER
CALL 2-BUSINESS DAYS IN ADVANCE BEFORE YOU DIG, GRADE, OR EXCAVATE FOR THE MARKING OF UNDERGROUND MEMBER UTILITIES.

NOTE: WHOLE NUMBERS INDICATE MILLIMETERS
DECIMAL NUMBERS INDICATE METERS.

Original Scale 1:500

Keesen Water Management, Inc.
420 South Marion Pkwy., #1502
Denver, Colorado 80209
Phone (303) 695-7711

TUPA ASSOCIATES, INC.
DESIGN PLANNING RESEARCH
12417 E. Amherst Cr., Aurora, CO 80014 (303)478-9470

FELSBURG HOLT & ULLEVIG

C-470/YOSEMITE INTERCHANGE

IRRIGATION SYSTEM PLAN SHEETS
C-470 WBCL STA. 0+092 TO STA. 0+220

DATE	PROJECT NO.	DESIGNED BY	DRAWN BY	CHECKED BY	SHEET NO.	OF	SHEETS	DRAWING NO.
FEB 96	95-088	LEK	LEK	LEK	1	8		I-1

COMPUTER GENERATED DRAWING DO NOT ALTER MANUALLY

AS CONSTRUCTED				
NO REVISIONS	REVISED	VOID		

FEDERAL RD REGION NO.	DIVISION	PROJ. NO.	SHEET NO.	TOTAL SHEETS
VIII	COLORADO	CC 4701-082	99	

REVISIONS

LEGEND

SYMBOL	DESCRIPTION	REF. TO DETAIL NO.
	POINT OF CONNECTION. CONNECT TO EXISTING 25 MM PIPE DOWNSTREAM OF WATER METER APPROXIMATE DEPTH OF BURY 1.2 METERS.	1
	32 MM FEBCO 825Y BACKFLOW PREVENTER WITH AGD-Y DRAIN.	2
	IRRI-TROL MC PLUS CONTROLLER WITH SA120 SURGE PROTECTION. SIZE AS SHOWN ON PLAN.	7
	MIDCO T-22 RESILIENT SEATED GATE VALVE. SIZE SAME AS MAINLINE.	8
	RAINBIRD PEB SERIES AUTOMATIC CONTROL VALVE INSTALLED IN A VALVE BOX, SIZE AS SHOWN.	6
	CL-200 SOLVENT WELD PVC MAINLINE WITH 25 MM MANUAL DRAIN VALVE AT ALL LOW POINTS. MINIMUM DEPTH OF COVER TO BE 450 MM. ALL PIPE TO BE 50 MM IN SIZE UNLESS LABELED OTHERWISE.	3 & 4
	25 MM HARDIE BLUE STRIPE DURA-POL DRIP DISTRIBUTION TUBING. MINIMUM DEPTH OF COVER TO BE 200 MM.	3
	FLUSH VALVE.	10
	NEW CL-200 PVC SLEEVE. ALL SLEEVES TO BE 100 MM IN SIZE UNLESS OTHERWISE INDICATED.	
	QUICK COUPLER VALVE	5
	VALVE NUMBER FLOW IN LITERS PER MINUTE VALVE SIZE IN MILLIMETERS	

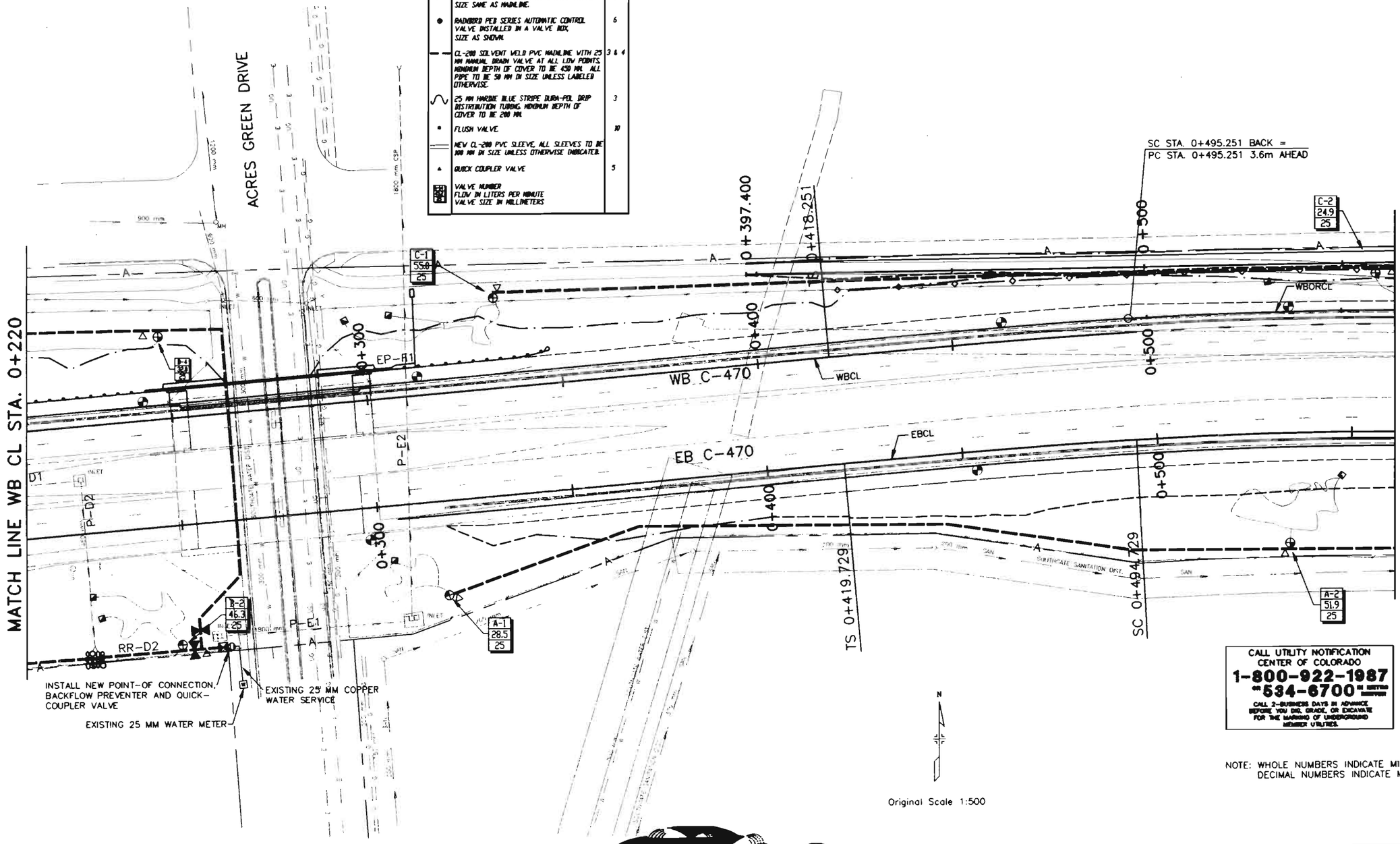

CALL UTILITY NOTIFICATION CENTER OF COLORADO
1-800-922-1987
or 534-6700 IN METRO DENVER
CALL 2-BUSINESS DAYS IN ADVANCE BEFORE YOU DIG, GRADE, OR EXCAVATE FOR THE MARKING OF UNDERGROUND MEMBER UTILITIES.

NOTE: WHOLE NUMBERS INDICATE MILLIMETERS
DECIMAL NUMBERS INDICATE METERS.

Original Scale 1:500

Keesee Water Management, Inc.
420 South Union Pkwy., #1502
Denver, Colorado 80209
Phone (303) 695-7711

TUPA ASSOCIATES, INC.
DESIGN PLANNING RESEARCH
12487 E. Amherst Cr., Aurora, CO 80014 (303)478-9470

FELSBURG HOLT & ULLEVIG

C-470/YOSEMITE INTERCHANGE

IRRIGATION SYSTEM PLAN SHEET
C-470 WBCL STA. 0+220 TO STA. 0+570

DATE	PROJECT NO.	DESIGNED BY LEK DRAWN BY LEK CHECKED BY LEK	SHEET NO. 2 OF 8 SHEETS	DRAWING NO.
FEB 96	95-088			I-2

COMPUTER GENERATED DRAWING DO NOT ALTER MANUAL

AS CONSTRUCTED

NO REVISIONS ☐ REVISED ☐ VOID ☐

FEDERAL RD REGION NO.	DIVISION	PROJ. NO.	SHEET NO.	TOTAL SHEETS
VIII	COLORADO	CC 4701-082	100	

REVISIONS		

LEGEND

SYMBOL	DESCRIPTION	REFER TO DETAIL NO.
⊖	POINT OF CONNECTION, CONNECT TO EXISTING 25 MM PIPE DOWNSTREAM OF WATER METER APPROXIMATE DEPTH OF BURY 1.2 METERS.	1
⊠	32 MM FEBCO 825Y BACKFLOW PREVENTER WITH AGD-Y DRAIN.	2
Ⓐ	IRRI-TROL MC PLUS CONTROLLER WITH SA120 SURGE PROTECTION. SIZE AS SHOWN ON PLAN.	7
⋈	NIBCO T-22 RESILIENT SEATED GATE VALVE. SIZE SAME AS MAINLINE.	8
⊕	RAINBIRD PEB SERIES AUTOMATIC CONTROL VALVE INSTALLED IN A VALVE BOX. SIZE AS SHOWN.	6
— —	CL-200 SOLVENT WELD PVC MAINLINE WITH 25 MM MANUAL DRAIN VALVE AT ALL LOW POINTS. MINIMUM DEPTH OF COVER TO BE 450 MM. ALL PIPE TO BE 50 MM IN SIZE UNLESS LABELED OTHERWISE.	3 & 4
∿	25 MM HARDIE BLUE STRIPE DURA-POL DRIP DISTRIBUTION TUBING. MINIMUM DEPTH OF COVER TO BE 200 MM.	3
▪	FLUSH VALVE.	10
— —	NEW CL-200 PVC SLEEVE. ALL SLEEVES TO BE 100 MM IN SIZE UNLESS OTHERWISE INDICATED.	
△	QUICK COUPLER VALVE	5
3 / 42.7 / 25	VALVE NUMBER FLOW IN LITERS PER MINUTE VALVE SIZE IN MILLIMETERS	

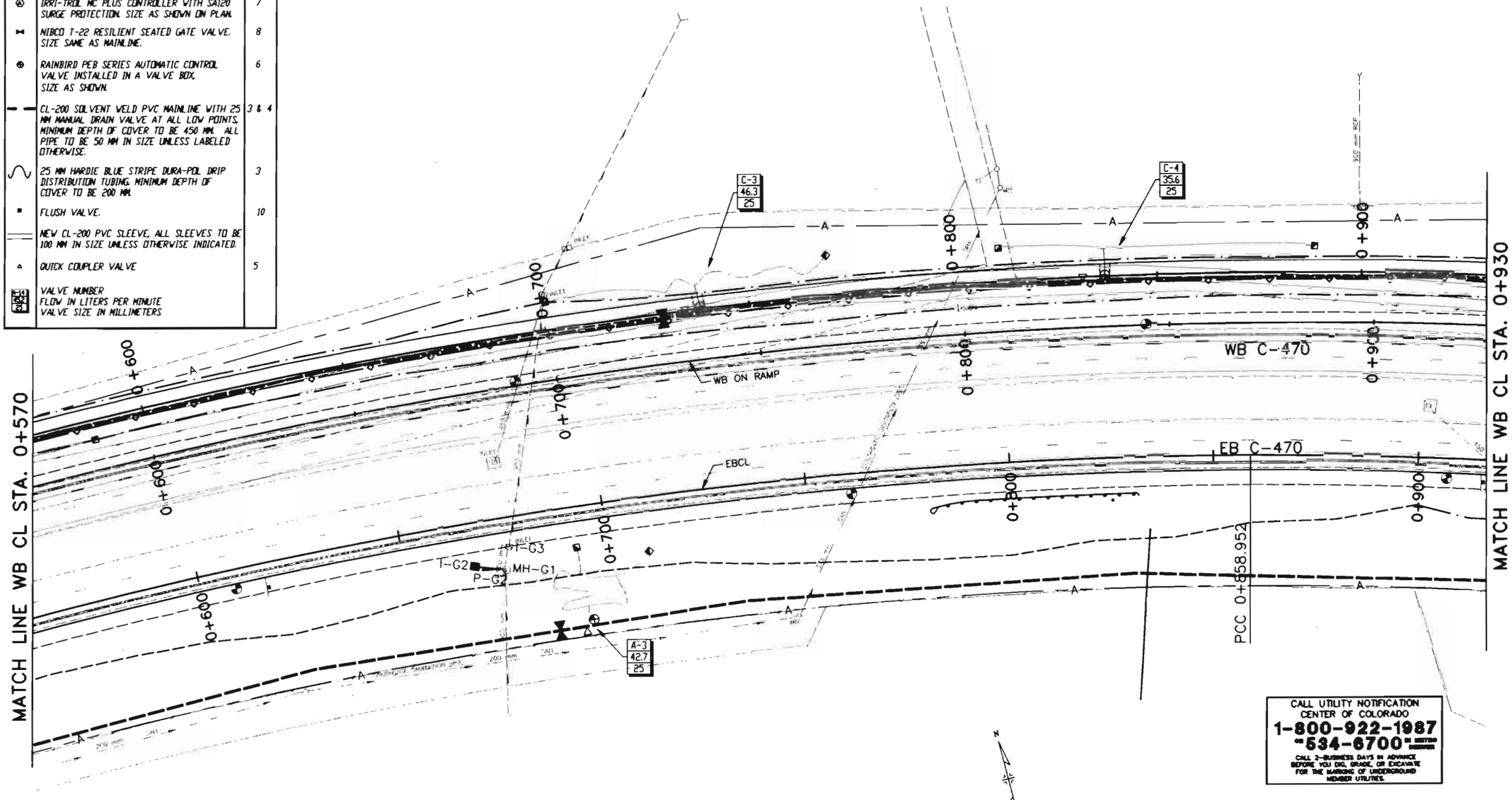

CALL UTILITY NOTIFICATION CENTER OF COLORADO
1-800-922-1987
or 534-6700 IN METRO DENVER
CALL 2-BUSINESS DAYS IN ADVANCE BEFORE YOU DIG, GRADE, OR EXCAVATE FOR THE MARKING OF UNDERGROUND MEMBER UTILITIES.

NOTE: WHOLE NUMBERS INDICATE MILLIMETERS
DECIMAL NUMBERS INDICATE METERS.

Original Scale 1:500

Keeton Water Management, Inc.

FELSBURG HOLT & ULLEVIG

C-470/YOSEMITE INTERCHANGE

IRRIGATION SYSTEM PLAN SHEET
C-470 WBCL STA. 0+570 TO STA. 0+930

DATE	PROJECT NO.	DESIGNED BY EK	DRAWN BY EK	CHECKED BY EK	SHEET NO. 3 OF 8 SHEETS	DRAWING NO. I-3
FEB 96	95-088					

COMPUTER GENERATED DRAWING. DO NOT ALTER MANUALLY

AS CONSTRUCTED				
NO REVISIONS	REVISED	VOID		

FEDERAL RD REGION NO.	DIVISION	PROJ. NO.	SHEET NO.	TOTAL SHEETS
VIII	COLORADO	CC 4701-082	101	

REVISIONS

LEGEND

SYMBOL	DESCRIPTION	NOTE NO.
●	POINT OF CONNECTION. CONNECT TO EXISTING 25 MM PIPE DOWNSTREAM OF WATER METER APPROXIMATE DEPTH OF BURY 1.2 METERS.	1
■	32 MM FEBCO 825Y BACKFLOW PREVENTER WITH AGD-Y DRAIN.	2
⊗	IRRI-TROL MC PLUS CONTROLLER WITH SA120 SURGE PROTECTION. SIZE AS SHOWN ON PLAN.	7
⋈	MIDCO T-22 RESILIENT SEATED GATE VALVE. SIZE SAME AS MAINLINE.	8
●	RAINBIRD PEB SERIES AUTOMATIC CONTROL VALVE INSTALLED IN A VALVE BOX, SIZE AS SHOWN.	6
— —	CL-200 SOLVENT WELD PVC MAINLINE WITH 25 MM MANUAL DRAIN VALVE AT ALL LOW POINTS. MINIMUM DEPTH OF COVER TO BE 450 MM. ALL PIPE TO BE 50 MM IN SIZE UNLESS LABELED OTHERWISE.	3 & 4
∿	25 MM HARDIE BLUE STRIPE DURA-POL DRIP DISTRIBUTION TUBING. MINIMUM DEPTH OF COVER TO BE 200 MM.	3
●	FLUSH VALVE.	10
═	NEW CL-200 PVC SLEEVE. ALL SLEEVES TO BE 100 MM IN SIZE UNLESS OTHERWISE INDICATED.	
▲	QUICK COUPLER VALVE	5
	VALVE NUMBER FLOW IN LITERS PER MINUTE VALVE SIZE IN MILLIMETERS	

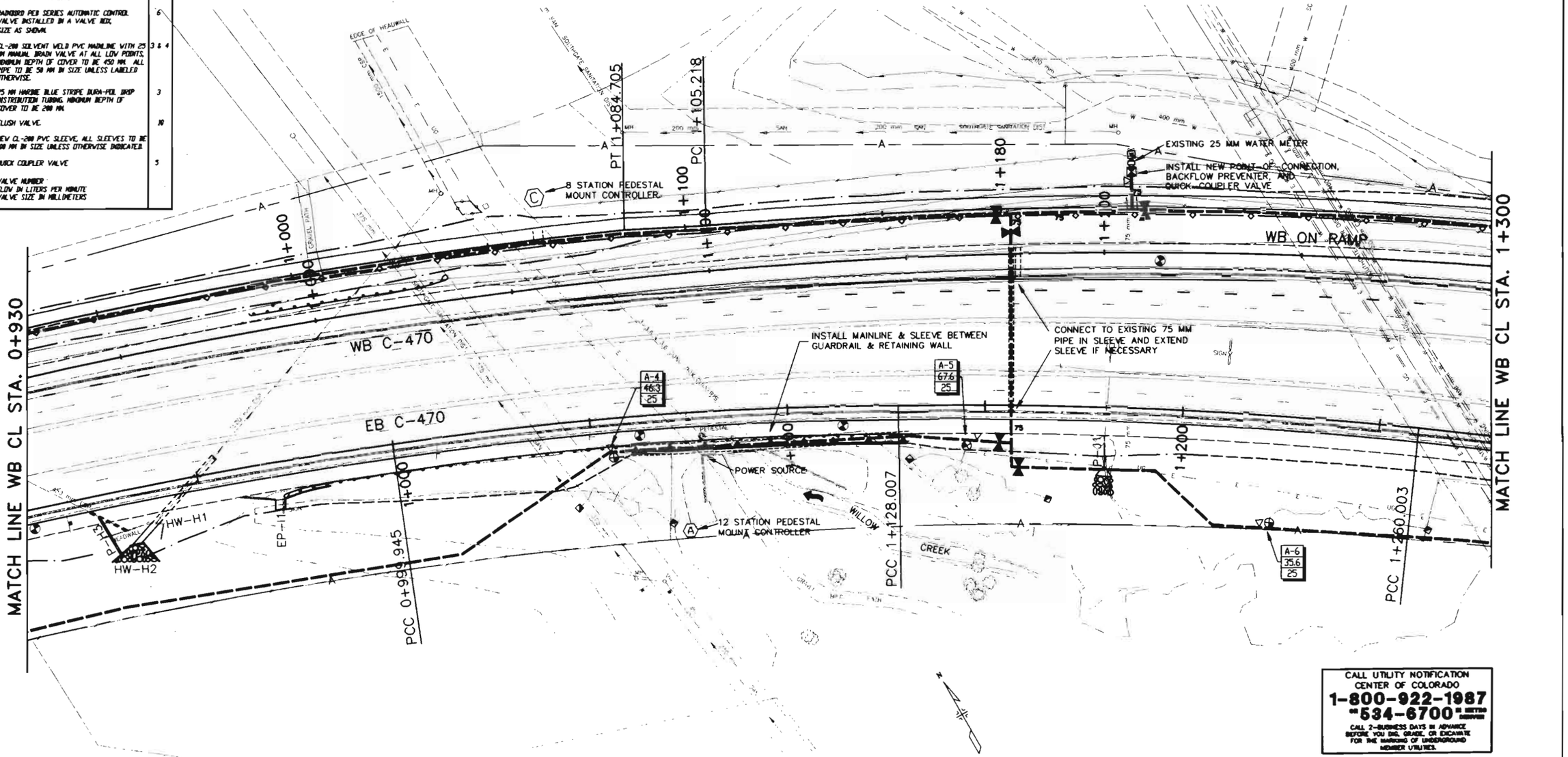

Original Scale 1:500

CALL UTILITY NOTIFICATION CENTER OF COLORADO
1-800-922-1987
or 534-6700 IN METRO DENVER
CALL 2-BUSINESS DAYS IN ADVANCE BEFORE YOU DIG, GRADE, OR EXCAVATE FOR THE MARKING OF UNDERGROUND MEMBER UTILITIES.

NOTE: WHOLE NUMBERS INDICATE MILLIMETERS
DECIMAL NUMBERS INDICATE METERS.

Keesen Water Management, Inc.
420 South Marion Pkwy., #1122
Denver, Colorado 80209
Phone (303) 695-7711

FELSBURG HOLT & ULLEVIG

C-470/YOSEMITE INTERCHANGE

IRRIGATION SYSTEM PLAN SHEET
C-470 WBCL STA. 0+930 TO STA. 1+300

DATE	PROJECT No.	DESIGNED BY	DRAWN BY	CHECKED BY	SHEET NO.	OF SHEETS	DRAWING NO.
FEB 96	95-088	LEK	LEK	LEK	4	8	I-4

COMPUTER GENERATED DRAWING DO NOT ALTER MANUALLY

AS CONSTRUCTED				
NO REVISIONS	REVISED	VOID		

FEDERAL RD REGION NO.	DIVISION	PROJ. NO.	SHEET NO.	TOTAL SHEETS
VIII	COLORADO	CC 4701-082	102	

REVISIONS		

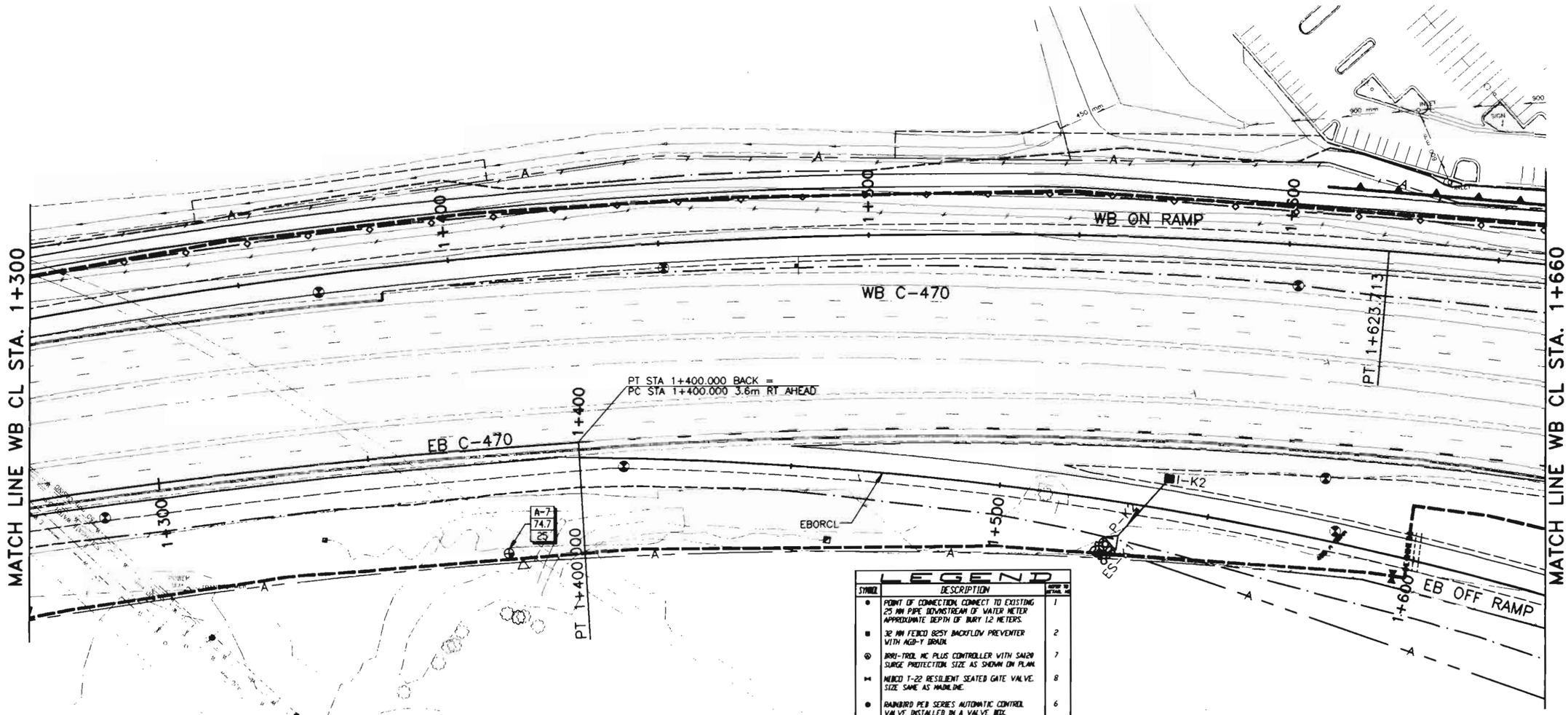

LEGEND

SYMBOL	DESCRIPTION	REFER TO DETAIL NO.
●	POINT OF CONNECTION, CONNECT TO EXISTING 25 MM PIPE DOWNSTREAM OF WATER METER APPROXIMATE DEPTH OF BURY 1.2 METERS.	1
■	32 MM FEBCO 825Y BACKFLOW PREVENTER WITH AGD-Y DRAIN.	2
⊛	IRRI-TROL MC PLUS CONTROLLER WITH SA120 SURGE PROTECTION. SIZE AS SHOWN ON PLAN.	7
⋈	NIBCO T-22 RESILIENT SEATED GATE VALVE. SIZE SAME AS MAINLINE.	8
●	RAINBIRD PEB SERIES AUTOMATIC CONTROL VALVE INSTALLED IN A VALVE BOX, SIZE AS SHOWN.	6
— —	CL-200 SOLVENT WELD PVC MAINLINE WITH 25 MM MANUAL DRAIN VALVE AT ALL LOW POINTS, MINIMUM DEPTH OF COVER TO BE 450 MM. ALL PIPE TO BE 50 MM IN SIZE UNLESS LABELED OTHERWISE.	3 & 4
∿	25 MM HARBIE BLUE STRIPE DURA-POL DRIP DISTRIBUTION TUBING. MINIMUM DEPTH OF COVER TO BE 200 MM.	3
▪	FLUSH VALVE.	10
═	NEW CL-200 PVC SLEEVE, ALL SLEEVES TO BE 100 MM IN SIZE UNLESS OTHERWISE INDICATED.	
▲	QUICK COUPLER VALVE	5
	VALVE NUMBER FLOW IN LITERS PER MINUTE VALVE SIZE IN MILLIMETERS	

CALL UTILITY NOTIFICATION CENTER OF COLORADO
1-800-922-1987
OR **534-6700** IN METRO SERVICE
CALL 2-BUSINESS DAYS IN ADVANCE BEFORE YOU DIG, GRADE, OR EXCAVATE FOR THE MARKING OF UNDERGROUND MEMBER UTILITIES.

NOTE: WHOLE NUMBERS INDICATE MILLIMETERS
DECIMAL NUMBERS INDICATE METERS.

Original Scale 1:500

Keesen Water Management, Inc.
420 South Marion Pkwy., #1502
Denver, Colorado 80209
Phone (303) 695-7711

FELSBURG HOLT & ULLEVIG

C-470/YOSEMITE INTERCHANGE

IRRIGATION SYSTEM PLAN SHEET
C-470 WBCL STA. 1+300 TO STA. 1+660

DATE	PROJECT NO.	DESIGNED BY	DRAWN BY	CHECKED BY	SHEET NO.	DRAWING NO.
FEB 96	95-088	LEK	LEK	LEK	6 OF 6 SHEETS	I-5

COMPUTER GENERATED DRAWING DO NOT ALTER MANUALLY

AS CONSTRUCTED

NO REVISIONS ☐ REVISED ☐ VOID ☐

FEDERAL RD REGION NO.	DIVISION	PROJ. NO.	SHEET NO.	TOTAL SHEETS
VIII	COLORADO	CC 4701-082	103	

REVISIONS		

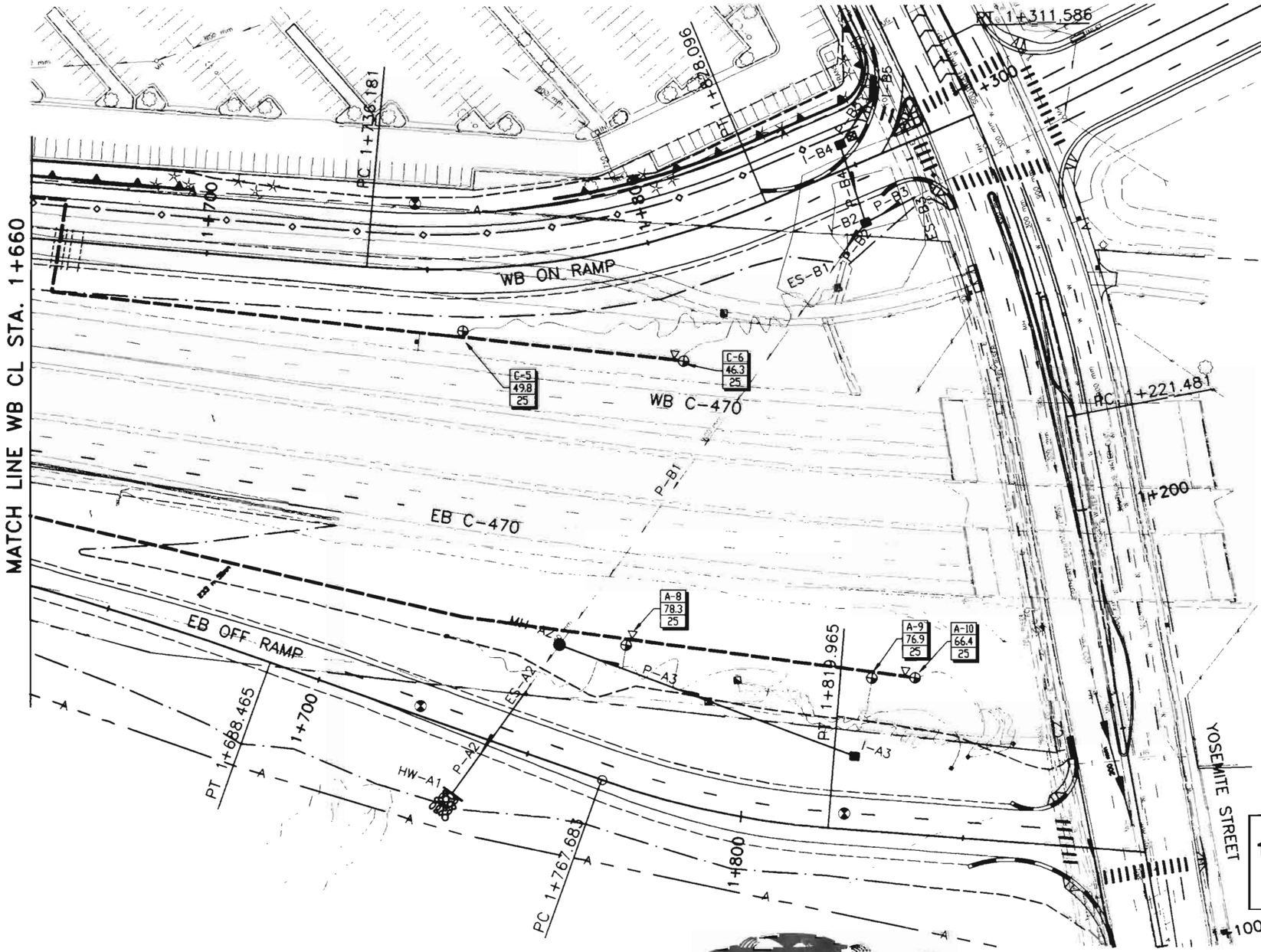

LEGEND

SYMBOL	DESCRIPTION	REFER TO DETAIL NO.
⊕	POINT OF CONNECTION. CONNECT TO EXISTING 25 MM PIPE DOWNSTREAM OF WATER METER APPROXIMATE DEPTH OF BURY 1.2 METERS.	1
⊠	32 MM FEBCO 825Y BACKFLOW PREVENTER WITH AGD-Y DRAIN.	2
Ⓐ	IRRI-TROL MC PLUS CONTROLLER WITH SA120 SURGE PROTECTION. SIZE AS SHOWN ON PLAN.	7
⋈	NIBCO T-22 RESILIENT SEATED GATE VALVE. SIZE SAME AS MAINLINE.	8
⊕	RAINBIRD PEB SERIES AUTOMATIC CONTROL VALVE INSTALLED IN A VALVE BOX, SIZE AS SHOWN.	6
— —	CL-200 SOLVENT WELD PVC MAINLINE WITH 25 MM MANUAL DRAIN VALVE AT ALL LOW POINTS. MINIMUM DEPTH OF COVER TO BE 450 MM. ALL PIPE TO BE 50 MM IN SIZE UNLESS LABELED OTHERWISE.	3 & 4
∿	25 MM HARDIE BLUE STRIPE DURA-PDL DRIP DISTRIBUTION TUBING. MINIMUM DEPTH OF COVER TO BE 200 MM.	3
▪	FLUSH VALVE.	10
— —	NEW CL-200 PVC SLEEVE, ALL SLEEVES TO BE 100 MM IN SIZE UNLESS OTHERWISE INDICATED.	
△	QUICK COUPLER VALVE	5
A-14 45.3 25	VALVE NUMBER FLOW IN LITERS PER MINUTE VALVE SIZE IN MILLIMETERS	

CALL UTILITY NOTIFICATION CENTER OF COLORADO
1-800-922-1987
OR **534-6700** STATEWIDE
CALL 2-BUSINESS DAYS IN ADVANCE BEFORE YOU DIG, GRADE, OR EXCAVATE FOR THE MARKING OF UNDERGROUND MEMBER UTILITIES.

Original Scale 1:500

NOTE: WHOLE NUMBERS INDICATE MILLIMETERS
DECIMAL NUMBERS INDICATE METERS

Keesee Water Management, Inc.
620 South Marion Pkwy., #1502
Denver, Colorado 80209
Phone (303) 695-7711

FELSBURG HOLT & ULLEVIG

C-470/YOSEMITE INTERCHANGE

IRRIGATION SYSTEM PLAN SHEETS
C-470 WBCL STA. 1+660 TO STA. 1+878.735

DATE	PROJECT NO.	DESIGNED BY	DRAWN BY	CHECKED BY	SHEET NO.	OF	SHEETS	DRAWING NO.
FEB 96	95-088	LEK	LEK	LEK	6	8		1-6

COMPUTER GENERATED DRAWING DO NOT ALTER MANUALLY

AS CONSTRUCTED

NO REVISIONS ☐ REVISED ☐ VOID ☐

FEDERAL RD REGION NO.	DIVISION	PROJ. NO.	SHEET NO.	TOTAL SHEETS
VIII	COLORADO	CC 4701-082	104	

REVISIONS		

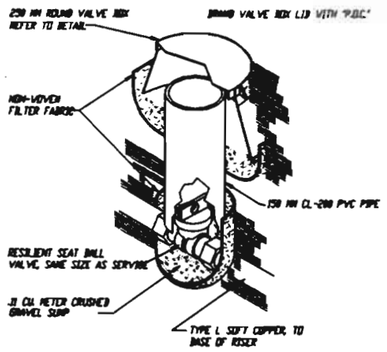

1 POINT OF CONNECTION DETAIL

© Copyright Keesen Water Management, Inc1995 Denver, Colorado

NOT TO SCALE

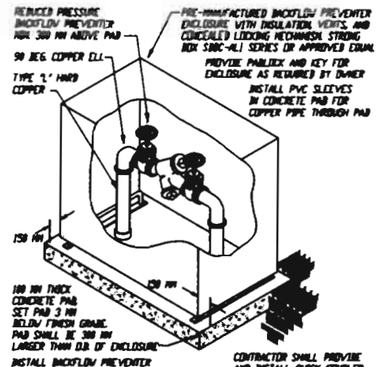

2 BACKFLOW PREVENTER DETAIL

© Copyright Keesen Water Management, Inc1995 Denver, Colorado

NOT TO SCALE

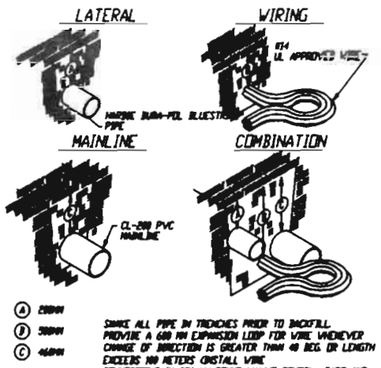

SHARE ALL PIPE IN TRENCHES PRIOR TO BACKFILL. PROVIDE A 600 MM EXPANSION LOOP FOR WIRE WHENEVER CHANGE OF DIRECTION IS GREATER THAN 45 DEG. OR LENGTH EXCEEDS 100 METERS ON STALL WIRE. CONNECTIONS IN 250 MM ROUND VALVE BOXES. TAPE AND BUNDLE WIRE AT 4 METER INTERVALS. USE 3M#82, OR 3M 1001 SPLICE KIT OR APPROVED EQUAL FOR WIRE CONNECTIONS.

3 MAINLINE & WIRING DETAIL

© Copyright Keesen Water Management, Inc1995 Denver, Colorado

NOT TO SCALE

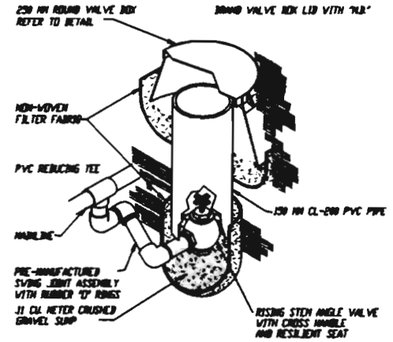

NOTE: DRAIN VALVE MUST BE INSTALLED BELOW MAINLINE

4 MANUAL DRAIN VALVE DETAIL

© Copyright Keesen Water Management, Inc1995 Denver, Colorado

NOT TO SCALE

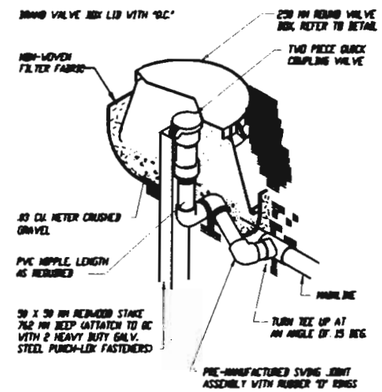

5 QUICK COUPLER VALVE DETAIL

© Copyright Keesen Water Management, Inc1995 Denver, Colorado

NOT TO SCALE

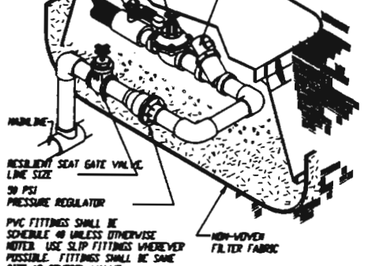

6 EMITTER CONTROL VALVE DETAIL

© Copyright Keesen Water Management, Inc1995 Denver, Colorado

NOT TO SCALE

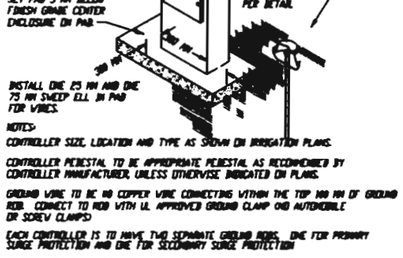

NOTES:

CONTROLLER SIZE, LOCATION AND TYPE AS SHOWN ON IRRIGATION PLANS.

CONTROLLER PEDESTAL TO BE APPROPRIATE PEDESTAL AS RECOMMENDED BY CONTROLLER MANUFACTURER, UNLESS OTHERWISE INDICATED ON PLANS.

GROUND WIRE TO BE #8 COPPER WIRE CONNECTING WITHIN THE TOP 100 MM OF GROUND ROD. CONNECT TO ROD WITH UL APPROVED GROUND CLAMP AND AUTOBUBBLE OR SCREW CLAMPS)

EACH CONTROLLER IS TO HAVE TWO SEPARATE GROUND RODS, ONE FOR PRIMARY SURGE PROTECTION AND ONE FOR SECONDARY SURGE PROTECTION

CONTROLLERS SHALL BE INSTALLED WITH MANUFACTURER'S SECONDARY SURGE PROTECTION AND PRIMARY LIGHTNING ARRESTOR

7 CONTROLLER DETAIL

© Copyright Keesen Water Management, Inc1995 Denver, Colorado

NOT TO SCALE

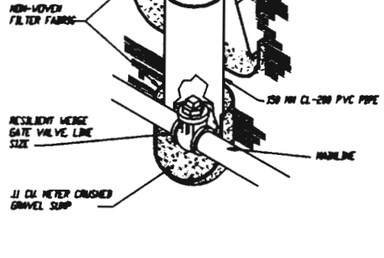

8 ISOLATION VALVE DETAIL

© Copyright Keesen Water Management, Inc1995 Denver, Colorado

NOT TO SCALE

INSTALL ALL VALVE BOXES APPROX. 3 MM BELOW FINISH GRADE.

CARSON VALVE BOX AND EXTENSIONS OR APPROVED EQUAL

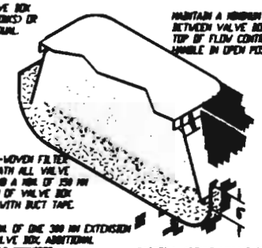

MAINTAIN A MINIMUM OF 25 MM BETWEEN VALVE BOX LID AND TOP OF FLOW CONTROL HANDLE IN OPEN POSITION

INSTALL NON-WOVEN FILTER FABRIC BENEATH ALL VALVE BOXES. EXTEND A MIN. OF 150 MM FROM BOTTOM OF VALVE BOX AND ATTACH WITH DUCT TAPE.

INSTALL A MIN. OF ONE 300 MM EXTENSION FOR EACH VALVE BOX, ADDITIONAL EXTENSIONS AS REQUIRED.

INSTALL 19 MM CRUSHED GRAVEL TO WITHIN 25 MM OF BOTTOM OF VALVE.

VALVE BOXES SHALL BE ALIGNED WITH ADJACENT SURFACES, OTHER VALVE BOXES AND GRADE CONTOURS.

BACKFILL AROUND VALVE BOX IN 150 MM LIFTS AND COMPACT SOIL. REPEAT BACKFILL IN 150 MM INCREMENTS UNTIL BACKFILL IS COMPLETE.

DO NOT INSTALL VALVE BOXES AT LOW POINTS.

9 VALVE BOX DETAIL

© Copyright Keesen Water Management, Inc1995 Denver, Colorado

NOT TO SCALE

CALL UTILITY NOTIFICATION CENTER OF COLORADO
1-800-922-1987
"534-0700"

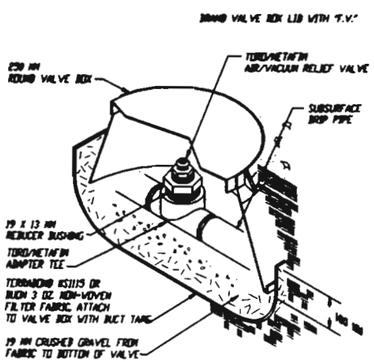

11 AIR RELIEF VALVE DETAIL

© Copyright Keesen Water Management, Inc1995 Denver, Colorado

NOT TO SCALE

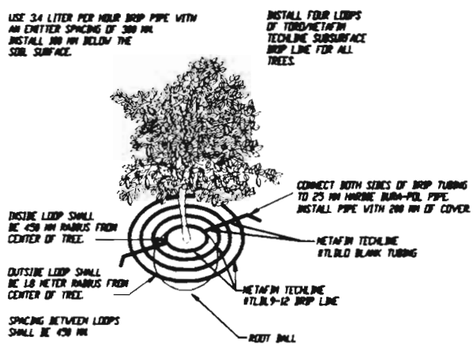

12 TREE SUBSURFACE DRIP DETAIL

© Copyright Keesen Water Management, Inc1995 Denver, Colorado

NOT TO SCALE

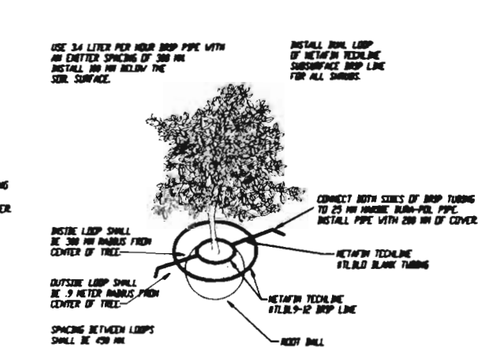

13 SHRUB SUBSURFACE DRIP DETAIL

© Copyright Keesen Water Management, Inc1995 Denver, Colorado

NOT TO SCALE

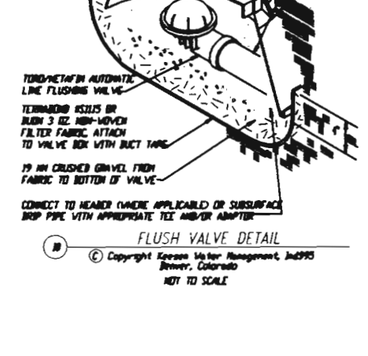

10 FLUSH VALVE DETAIL

© Copyright Keesen Water Management, Inc1995 Denver, Colorado

NOT TO SCALE

Keesen Water Management, Inc.
4P South Wadsworth Blvd., #300
Denver, Colorado 80226
Phone (303) 935-7711

FELSBURG HOLT & ULLEVIG

C-470/YOSEMITE INTERCHANGE

IRRIGATION SYSTEM DETAIL SHEET

DATE	PROJECT NO.	DESIGNED BY LEK	DRAWN BY LEK	CHECKED BY LEK	SHEET NO. 7 OF 8 SHEETS	DRAWING NO. I-7
DEC 95	95-088					

COMPUTER GENERATED DRAWING, DO NOT ALTER MANUALLY

AS CONSTRUCTED			
NO REVISIONS ☐	REVISED ☐	VOID ☐	

FEDERAL RD REGION NO.	DIVISION	PROJ. NO.	SHEET NO.	TOTAL SHEETS
VIII	COLORADO	CC 4701-082	105	

REVISIONS		

TABULATION OF TRAFFIC ENGINEERING ITEMS

ITEM NO.	ITEM	UNIT	PROJECT TOTALS
202	REMOVAL OF PAVEMENT MARKING	m2	300
202	REMOVAL OF GROUND SIGN	EACH	7
202	SANDBLASTING	m2	593
210	RESET OVERHEAD SIGN STRUCTURE	EACH	1
210	RESET GROUND SIGN	EACH	6
503	DRILLED CAISSON (1072mm)	m	15.0
503	DRILLED CAISSON (1222mm)	m	6.7
613	50mm ELECTRICAL CONDUIT (PLASTIC)	m	540
613	50mm ELECTRICAL CONDUIT (PLASTIC)(INSTALL ONLY)	m	105
613	75mm ELECTRICAL CONDUIT (PLASTIC)	m	1105
613	LUMINAIRE HIGH PRESSURE SODIUM (250 WATT)	EACH	4
614	SIGN PANEL (CLASS I)	m2	25.1
614	SIGN PANEL (CLASS II)	m2	13.2
614	SIGN PANEL (CLASS III)	m2	71.6
614	TIMBER SIGN POST 89x89mm	m	16
614	TIMBER SIGN POST 140x140mm	m	82
614	STEEL SIGN POST (U-3)	m	25
614	STEEL SIGN POST (W200 x 27)	m	19.1
614	CONCRETE FOOTING (TYPE 3)	EACH	4
614	MODIFICATION OF SIGN LEGEND	L S	1
614	CANTILEVER STRUCTURE (7 TO LESS THAN 9 METER FRAME)	EACH	1
614	CANTILEVER STRUCTURE (9 TO LESS THAN 11 METER FRAME)	EACH	2
614	PEDESTRIAN SIGNAL FACE (400)	EACH	12
614	TRAFFIC SIGNAL FACE (300-300-300)	EACH	21
614	TRAFFIC SIGNAL FACE (300-300-300-300-300)	EACH	4
614	FIRE PREEMPTION UNIT AND TIMER	EACH	2
614	LOOP DETECTOR WIRE	m	840
614	TRAFFIC SIGNAL VEHICLE DETECTOR AMPLIFIER (LOOP TYPE)(4 CHANNEL)	EACH	5
614	TRAFFIC SIGNAL VEHICLE DETECTOR (MICRO TYPE)	EACH	24
614	TRAFFIC SIGNAL-LIGHT POLE STEEL (1 MAST ARM)(INSTALL ONLY)	EACH	2
614	TRAFFIC SIGNAL-LIGHT POLE STEEL (2 MAST ARM)(INSTALL ONLY)	EACH	2
614	TRAFFIC SIGNAL PEDESTAL POLE STEEL (INSTALL ONLY)	EACH	4
614	TRAFFIC SIGNAL CONTROLLER (TYPE 170)	EACH	2
627	PAVEMENT MARKING PAINT	L	20
627	EPOXY PAVEMENT MARKING	L	491
627	PREFORMED THERMOPLASTIC PAVEMENT MARKING (WORD SYMBOL)	m2	2.4
627	PREFORMED THERMOPLASTIC PAVEMENT MARKING (X WALK-STOP LINE)	m2	137
630	FLAGGING	Hr	2000
630	TRAFFIC CONTROL SUPERVISOR	DAY	120
630	TRAFFIC CONTROL INSPECTION	DAY	50
630	FLASHING BEACON (PORTABLE)	EACH	2
630	BARRICADE (TYPE 3M-A) (TEMPORARY)	EACH	13
630	CONSTRUCTION TRAFFIC SIGN (PANEL SIZE A)	EACH	21
630	CONSTRUCTION TRAFFIC SIGN (PANEL SIZE B)	EACH	49
630	CONSTRUCTION TRAFFIC SIGN (SPECIAL)	m2	9.90
630	ADVANCE WARNING FLASHING OR SEQUENCING ARROW PANEL (C TYPE)	EACH	6
630	DRUM CHANNELIZING DEVICE	EACH	120
630	CONCRETE BARRIER (TEMPORARY)	m	3500
630	TRAFFIC CONE	EACH	200
630	MOBILE PAVEMENT MARKING ZONE	DAY	4
630	IMPACT ATTENUATOR (SAND FILLED PLASTIC BARREL) (TEMPORARY)	EACH	3

FELSBURG HOLT & ULLEVIG

C-470/YOSEMITE INTERCHANGE

TABULATION OF TRAFFIC ENGINEERING ITEMS

DATE	PROJECT NO	DESIGNED BY JJE	DRAWN BY SS	CHECKED BY RRF	SHEET NO. 1	OF 1 SHEETS	DRAWING NO. TE-1
FEB 96	95-088						

D:\95088\ACAD\A5C83R08.dwg, 1:1, 02/29/96 at 12:59

COMPUTER GENERATED DRAWING DO NOT ALTER MANUALLY

AS CONSTRUCTED			
NO REVISIONS ☐	REVISED ☐	VOID ☐	

FEDERAL RD REGION NO.	STATE	PROJ. NO.	SHEET NO.	TOTAL SHEETS
VIII	COLORADO	CC 4701-082	106	

REVISIONS		

TABULATION OF SIGNS

SIGN NO.	SIGN CODE	STATION	SIGN * PANEL SIZE	BACK-GROUND COLOR	REMOVE GROUND SIGN (EACH)	RESET SIGN PANEL (EACH)	RESET GROUND SIGN (EACH)	NO. OF POSTS	LENGTH OF POST (m)	POST TYPE (METERS)					FDNC. FOOTING TYPE (EACH)								SIGN PANEL (SQ. METERS)		
										89mm x 89mm TIMBER	140mm x 140mm TIMBER	W200 x 27 BEAM		U3 STEEL	1	2	3	4	5	6	7	8	CLASS I	CLASS II	CLASS III
1	W4-3	SEE DWG. NO SS-5	1200 x 1200	YELLOW				1	4.25		4.25													1.44	
2	SEE TABULATION OF OVERHEAD SIGNS																								
3	SEE TABULATION OF OVERHEAD SIGNS																								
4	SPECIAL	0+575, RT., C-470	3.3m x 2.4m	GREEN				2	4.9/4.4			9.3					2								7.92
5A	R3-7aR	0+585, LT., C-470	1500 x 1500	WHITE				1	4.5		5.0													2.25	
5B	SPECIAL		1200 x 400	WHITE																				0.48	
6	M3-2/M1-6A	0+620, RT., C-470					1																		
7	SEE TABULATION OF OVERHEAD SIGNS																								
8	R2-1	0+920, RT., C-470					1																		
9	D10-2(25)	1+025, LT., C-470					1																		
10	D10-2(25)	1+025, RT., C-470					1																		
11	M3-4/M1-6A	1+080, LT., C-470					1																		
12	SPECIAL	1+400, RT., C-470	4.5m x 1.8m	GREEN				2	4.8/5.0			9.8					2								8.1
13	R16-1/SPECIAL	1+360, LT., C-470					1																		
14	W13-2(45)	1+360, RT., C-470	1200 x 1500	YELLOW				1	4.25		4.25													1.80	
15	W4-2	1+482, LT., C-470			1																				
16	W4-1(R)	1+565, LT., C-470	1200 x 1200	YELLOW				1	4.25		4.25													1.44	
17	SPECIAL	1+525, LT., OFF RAMP	1.5m x 1.5m	GREEN				1	5.0		5.0														2.25
18	W3-3	1+550, RT., OFF RAMP	900 x 900	YELLOW				1	4.25		4.25													0.81	
19A	SPECIAL	1+835, RT., OFF RAMP	1.5m x 1.2m	GREEN				1	5.0		5.0														1.80
19B	R5-1a		900 x 600	RED					MOUNT WITH 19A															0.54	
20	R5-1a	1+835, LT., OFF RAMP	900 x 600	RED				1	5.0		5.0													0.54	
21	W9-1/SPECIAL	1+945, LT., C-470			1																				
22	R4-7	1+275, LT., YOSEMITE ST.	600 x 750	WHITE				1	4.0	4.0														0.45	
23A	R5-1	1+852, LT., OFF RAMP	750 x 750	WHITE				1	5.0		5.0													0.56	
23B	R6-1		900 x 300	BLACK					MOUNT WITH 23A															0.27	
23C	R6-1		900 x 300	BLACK					MOUNT WITH 23A															0.27	
24A	R5-1	1+852, RT., OFF RAMP	750 x 750	WHITE				1	5.0		5.0													0.56	
24B	R6-1		900 x 300	BLACK					MOUNT WITH 24A															0.27	
24C	R6-1		900 x 300	BLACK					MOUNT WITH 24A															0.27	
25	R4-7	1+152, LT., YOSEMITE ST.	600 x 750	WHITE				1	4.0	4.0														0.45	
26	R7-1	1+264, RT., YOSEMITE ST.			1																				
27A	M3-4	1+267, RT., YOSEMITE ST.	600 x 300	WHITE				1	5.0		5.0													0.18	
27B	M1-6A		600 X 600	WHITE					MOUNT WITH 27A															0.36	
27C	M6-1(L)		525 x 400	WHITE					MOUNT WITH 27A															0.21	
28	R7-1	1+302, LT., YOSEMITE ST.			1																				
29	W4-2(L)	1+816, LT., ON RAMP	1200 x 1200	YELLOW				1	4.25		4.25													1.44	
30	R1-2	1+848, LT., ON RAMP	900x900x900	WHITE				1	4.25		4.25													0.36	
31	R3-7(R)	1+352, LT., YOSEMITE ST.	750 x 750	WHITE				1	4.0	4.0														0.56	
32	R3-7(R)	1+443, LT., YOSEMITE ST.	750 x 750	WHITE				1	4.0	4.0														0.56	
33A	M3-4	1+380, LT., YOSEMITE ST.	600 x 300	WHITE				1	5.0		5.0													0.18	
33B	M1-6A		600 x 600	WHITE					MOUNT WITH 33A															0.36	
33C	M6-1(R)		525 x 400	WHITE					MOUNT WITH 33A															0.21	
34	SEE TABULATION OF OVERHEAD SIGNS																								
35	SEE TABULATION OF OVERHEAD SIGNS																								
36	W1-7	1+126, RT., YOSEMITE ST.	1200 x 600	YELLOW				2	5.0/5.0		10.0													0.72	
37A	M3-4	1+470, LT., YOSEMITE ST.	600 x 300	WHITE				1	5.0		5.0													0.18	
37B	M1-6A		600 X 600	WHITE					MOUNT WITH 37A															0.36	
37C	M6-1(R)		525 x 400	WHITE					MOUNT WITH 37A															0.21	
SUBTOTAL THIS SHEET					4		6	25		16.0	81.5	19.1					4							7.37	10.92	20.07

* DIMENSIONS IN MILLIMETERS UNLESS OTHERWISE NOTED.

FELSBURG HOLT & ULLEVIG

C-470/YOSEMITE INTERCHANGE				
TABULATION OF SIGNS				
DATE FEB 96	PROJECT NO 95-088	DESIGNED BY JGF DRAWN BY SS CHECKED BY RRF	SHEET NO. 1 OF 2 SHEETS	DRAWING NO. SS-3

I:\WORK\ACAD\A9508603.dwg, 1:1, 02/29/96 at 13:11

COMPUTER GENERATED DRAWING DO NOT ALTER MANUALLY

AS CONSTRUCTED			
NO REVISIONS ☐	REVISED ☐	VOID ☐	

FEDERAL RD REGION NO.	DIVISION	PROJ. NO.	SHEET NO.	TOTAL SHEETS
VIII	COLORADO	CC 4701-082	107	

REVISIONS		

TABULATION OF SIGNS

SIGN NO.	SIGN CODE	STATION	SIGN PANEL SIZE	BACK-GROUND COLOR	REMOVE GROUND SIGN (EACH)	RESET SIGN PANEL (EACH)	RESET GROUND SIGN (EACH)	NO. OF POSTS	LENGTH OF POST	POST TYPE (METERS)								CONC. FOOTING TYPE (EACH)								SIGN PANEL (SQ. METERS)		
										89mm x 89mm TIMBER	140mm x 140mm TIMBER	W200 x 27 BEAM		U-3 STEEL					1	2	3	4	5	6	7	8	CLASS I	CLASS II	CLASS III
38	SPECIAL	0+985, RT., C-470			1																							
39	R3-1		600 x 600	WHITE					MOUNT ON MAST ARM																		0.36		
40	SPECIAL		900 x 900	WHITE					MOUNT ON MAST ARM																		0.81		
41	R3-5R		750 x 900	WHITE					MOUNT ON PED. POLE																		0.68		
42	R9-2		300 x 450	WHITE					MOUNT ON PED. POLE																		0.14		
43	R9-2		300 x 450	WHITE					MOUNT ON MAST ARM																		0.14		
44	R3-1		600 x 600	WHITE					MOUNT ON MAST ARM																		0.36		
45	R3-5L		750 x 900	WHITE					MOUNT ON MAST ARM																		0.68		
46	R3-5L		750 x 900	WHITE					MOUNT ON MAST ARM																		0.68		
47	SPECIAL		750 x 900	WHITE					MOUNT ON MAST ARM																		0.68		
48	R3-5R		750 x 900	WHITE					MOUNT ON MAST ARM																		0.68		
49	SPECIAL		900 x 900	WHITE					MOUNT ON MAST ARM																		0.81		
50	SPECIAL	0+185, LT., C-470			1																							
51	R3-7aR	0+185, LT., C-470	1500 x 1500	WHITE					MOUNT ON CANTILEVER SIGN POST																			2.25	
52	SPECIAL	0+795, LT., C-470			1																							
53	OM-3L	0+958, RT., YOSEM. ST.	300 x 900	YELLOW/BLACK				1	3.05					3.05													0.27		
54	OM-3L	0+956, RT., YOSEM. ST.	300 x 900	YELLOW/BLACK				1	3.05					3.05													0.27		
55	OM-3L	0+954, RT., YOSEM. ST.	300 x 900	YELLOW/BLACK				1	3.05					3.05													0.27		
56	OM-3L	0+952, RT., YOSEM. ST.	300 x 900	YELLOW/BLACK				1	3.05					3.05													0.27		
57	OM-3R	0+920, RT., YOSEM. ST.	300 x 900	YELLOW/BLACK				1	3.05					3.05													0.27		
58	OM-3R	0+922, RT., YOSEM. ST.	300 x 900	YELLOW/BLACK				1	3.05					3.05													0.27		
59	OM-3R	0+924, RT., YOSEM. ST.	300 x 900	YELLOW/BLACK				1	3.05					3.05													0.27		
60	OM-3R	0+926, RT., YOSEM. ST.	300 x 900	YELLOW/BLACK				1	3.05					3.05													0.27		
61	SEE TABULATION OF OVERHEAD SIGNS																												
SUBTOTAL THIS SHEET					3		-	8		-	-	-		24.4								-					8.18	2.25	-
TOTAL (ALL SHEETS)					7		6	33		16.0	81.5	19.1		24.4								4					15.55	13.17	20.07

FELSBURG HOLT & ULLEVIG

C-470/YOSEMITE INTERCHANGE

TABULATION OF SIGNS

DATE	PROJECT NO	DESIGNED BY JGF	SHEET NO. 2	DRAWING NO.
FEB 96	95-088	DRAWN BY SS	OF 2 SHEETS	SS-4
		CHECKED BY RRF		

G:\95088\ACAD\A5088613.dwg, 11", 02/13/96 at 13:29

COMPUTER GENERATED DRAWING DO NOT ALTER MANUALLY

AS CONSTRUCTED				
NO REVISIONS ☐	REVISED ☐	VOID ☐		

FEDERAL RD REGION NO.	DIVISION	PROJ. NO.	SHEET NO.	TOTAL SHEETS
VIII	COLORADO	CC 4701-082	108	

REVISIONS		

TABULATION OF PAVEMENT MARKINGS

STATION	LOCATION	PAVEMENT MARKING LINES (LINEAR METERS)								(SQUARE METERS)		
		EDGE		LANE	CENTER	CHANNELIZING		CROSSHATCH				
		WHITE SOLID 100mm	YELLOW SOLID 100mm	WHITE BROKEN 100mm	YELLOW SOLID 100mm	WHITE SOLID 200mm	WHITE LANE DROP 200mm	WHITE SOLID 200mm	STOP BAR 600mm	ARROW *	CROSS-WALK WHITE * SOLID	STOP BAR *
0+113 TO 0+450	WB C-470	337	337	85			85					
0+166 TO 0+450	EB C-470	284	284	142								
0+450 TO 1+150	WB C-470	700	700	258			115					
0+450 TO 1+150	EB C-470	700	700	350								
1+150 TO 1+510	WB C-470	593	360	180		233						
1+150 TO 1+735	EB C-470	515	585	293		70						
1+383 TO 1+865	WB ON RAMP	457	475	10								
1+450 TO 1+875	EB OFF RAMP	408	320	40		70				2.4		
1+000 TO 1+200	YOSEMITE STREET			95	475	20					30	18
1+200 TO 1+468	YOSEMITE STREET			110	330	560		60			63	26
TOTAL (METERS)		3994	3761	1563	805	953	200	60				
TOTAL (SQUARE METERS)										2.4	93	44
TOTAL (LITERS)		156	147	61	32	74	16	5		–	–	–

* PREFORMED THERMOPLASTIC PAVEMENT MARKING

NOTE:

1. FOR DETAILS OF PAVEMENT MARKING LINES AND LINE PLACEMENT, SEE STRIPING PLANS AND STANDARD S-627-1.
2. ALL CONCRETE PAVEMENT SURFACES TO BE COVERED WITH PERMANENT PAVEMENT MARKING MATERIALS SHALL BE SANDBLASTED PRIOR TO PLACEMENT OF ANY PRIMER OR PAVEMENT MARKING MATERIAL. THE WORK SHALL BE PERFORMED IN ACCORDANCE WITH SECTION 202.05 OF THE STANDARD SPECIFICATIONS. IT IS ESTIMATED THAT 593 m² OF SANDBLASTING SHALL BE REQUIRED.
3. ALL STOP BAR AND CROSSWALK QUANTITIES ARE INCLUDED WITH THE YOSEMITE STREET QUANTITIES.

SUMMARY OF PAVEMENT MARKING QUANTITIES

COLOR	EPOXY PAVEMENT MARKING (LITERS)	PREFORMED THERMOPLASTIC PVM'T MARKING (M^2)	
		(XWALK-STOP LINE)	(WORD-SYMBOL)
YELLOW	17.9	–	–
WHITE	3.2	1.37	2.4
TOTAL	4.9	1.37	2.4

FELSBURG HOLT & ULLEVIG

C-470/YOSEMITE INTERCHANGE

TABULATION OF PAVEMENT MARKINGS

DATE	PROJECT NO.	DESIGNED BY	DRAWN BY	CHECKED BY	SHEET NO. 1 OF 1 SHEETS	DRAWING NO.
FEB 96	95-088	KCF	SSS	RRF		95-1

G:\95088\ACAD\95088603.dwg, T.L., 02/15/96 at 14:56

COMPUTER GENERATED DRAWING: DO NOT ALTER MANUALLY

AS CONSTRUCTED					
NO REVISIONS		REVISED		VOID	

FEDERAL RD REGION NO.	DIVISION	PROJ. NO.	SHEET NO.	TOTAL SHEETS
VIII	COLORADO	CC 4701-082	109	

REVISIONS		

TABULATION OF OVERHEAD SIGNS

SIGN NO	STATION	SIGN PANEL SIZE (METERS)	BACK-GROUND COLOR	NO. OF POSTS	TYPE OF POSTS	STRUCTURE TYPE	~~FRAME SIZE~~	STRUCTURE NUMBER	SIGN PANEL CLASS I (m2)	SIGN PANEL CLASS II (m2)	SIGN PANEL CLASS III (m2)	TYPE OF FOOTING	PAYLENGTH L/R	COMMENTS
2A	0+185 LT., C-470	3.6 x 2.4	GREEN	1	406mm	CANTILEVER		F-17-KP			8.64	1072mm DIAMETER PILE	4.3m	
2B		3.5 x 0.75	YELLOW						2.63					
3A	0+825, RT., C-470	4.2 x 4.2	GREEN	1	559mm	CANTILEVER		F-17-KN			17.64	1222mm DIAMETER PILE	6.7m	
3B		4.05 x 0.95	YELLOW						3.85					
7A	0+805 LT., C-470	4.2 x 3.0	GREEN	1	508mm	CANTILEVER		F-17-KO			12.60	1072mm DIAMETER PILE	5.8m	
7B		4.05 x 0.75	YELLOW						3.04					
34	1104+00 *					BUTTERFLY								MODIFY SIGN LEGEND
35	1224+00 *					BUTTERFLY								MODIFY SIGN LEGEND
61	1+145 EBCL, C-470	6.0 x 2.1	GREEN			BUTTERFLY		F-17-JE			12.60	1072mm DIAMETER CAISSON	4.9m	RESET SIGN STRUCTURE ONTO NEW CAISSON FOUNDATION. REPLACE EAST-BOUND SIGN PANEL.
	TOTALS								9.52		51.48		21.7m **	

* EXISTING C-470 STATIONING

** PAID AS 15.0 M OF 1072 MM DRILLED CAISSON AND 6.7 M OF 1222 MM DRILLED CAISSON.

NOTES FOR OVERHEAD SIGNS

1. Panels for overhead signs shall be sheet aluminum. See S-614-4. See Department Standard "Class I Ground Sign Installation" for Class I Panel requirements, minimum thickness is reduced to 2mm.
2. All reflective sheeting shall be ASTM D4956, Type III.
3. Legend and border for green background signs shall be system 1, 2 or 3 and for yellow background signs shall be system 4. See section 713 of the standard specifications.
4. Overhead signs shall have the structure number stenciled on the post in accordance with Department Standard "Structure Number installation".
5. It is estimated that 730m of 75mm electrical conduit will be required to supply power to the cantilever signs.

FELSBURG HOLT & ULLEVIG

C-470/YOSEMITE INTERCHANGE				
TABULATION OF OVERHEAD SIGNS				
DATE FEB 96	PROJECT NO. 95-088	DESIGNED BY JGF DRAWN BY SS CHECKED BY BRF	SHEET NO. 1 OF 1 SHEETS	DRAWING NO. SS-2

COMPUTER GENERATED DRAWING DO NOT ALTER MANUALLY

AS CONSTRUCTED			
NO REVISIONS ☐	REVISED ☐	VOID ☐	

FEDERAL RD REGION NO.	DIVISION	PROJ. NO.	SHEET NO.	TOTAL SHEETS
VIII	COLORADO	CC 4701-082	110	

REVISIONS		

TABULATION OF CONSTRUCTION TRAFFIC CONTROL DEVICES

SIGNS						OTHER DEVICES		
SIGN CODE	LEGEND	DIMENSIONS	PANEL SIZE A (EACH)	PANEL SIZE B (EACH)	PANEL SIZE (SPECIAL) M2	ITEM	QUANTITY	UNIT
R9-3a	NO PEDESTRIANS (SYMBOL)	600 X 600	2			REMOVAL OF PAVEMENT MARKING	300	m2
R5-6	NO BICYCLES (SYMBOL)	600 x 600	2			PAVEMENT MARKING PAINT *	20	L
R11-2	ROAD CLOSED	1200 x 750		3		FLAGGING	2000	HOUR
W1-7	ARROW (SYMBOL)	1200 x 600	3			TRAFFIC CONTROL SUPERVISOR	120	DAY
W4-2(R)	LANE REDUCTION TRANSITION (SYMBOL)	1200 x 1200		2		TRAFFIC CONTROL INSPECTION	50	DAY
W4-2(L)	LANE REDUCTION TRANSITION (SYMBOL)	1200 x 1200		6		BARRICADE TYPE (3M-A)(TEMP)	13	EACH
W4-4b(R)	REVERSE CURVE (SYMBOL)(DOUBLE LANE)	1200 x 1200		1		FLASH ARROW PANEL (C TY)	6	EACH
W5-1	ROAD NARROWS	1200 x 1200		1		DRUM CHANNELIZING DEVICE	120	EACH
W20-1	ROAD WORK (DIST.)	1200 x 1200		16		CONCRETE BARRIER (TEMPORARY)	3500	m
W20-5	LANE CLOSED (DIST.)	1200 x 1200		3		TRAFFIC CONES	200	EACH
W20-7a	FLAGGER (SYMBOL)	1200 x 1200		2		MOBILE PAVEMENT MARKING ZONE	4	DAY
W20-1	ROAD WORK AHEAD	1200 x 1200		5		IMPACT ATTEN (SANDFL)(TEMP)	3	EACH
						FLASHING BEACON (PORTABLE)	2	EACH
G20-10	THANK YOU	1200 x 1200		6				
D11-1	BIKE ROUTE	600 x 600	7					
M4-9L	DETOUR	750 x 600	4					
M4-9R	DETOUR	750 x 600	3					
CONSTR. TRAFFIC SIGN SPECIAL	ROAD WORK ON ACRES GREEN DR.	1500 X 1200			7.20			
SPECIAL	RIGHT SHOULDER CLOSED AHEAD	1200 x 1200		4				
SPECIAL	ROAD WORK ON C-470 1 MILE	1800 x 1500			2.70			
SIGN TOTALS			21	49	9.90			

CONSTRUCTION SIGNING NOTES

BASED UPON SIGHT DISTANCE AND OTHER CONSIDERATIONS, THE FINAL LOCATION OF THESE SIGNS IS SUBJECT TO THE APPROVAL BY THE PROJECT ENGINEER.

SEE CASE V, XII, AND XIII OF STANDARD S-630-1 OF THE COLORADO STANDARD PLANS FOR BASIC PLACEMENT DETAILS OF THE CONSTRUCTION TRAFFIC CONTROL DEVICES. SEE ALSO DETAIL SHEETS FOR CONSTRUCTION TRAFFIC CONTROL DEVICE PLACEMENT.

* PAVEMENT MARKING PAINT INCLUDES 13 L OF WHITE AND 7 L OF YELLOW FOR A TOTAL OF 20 LITERS.

NOTE: WHOLE NUMBERS INDICATE MILLIMETERS.
DECIMAL NUMBERS INDICATE METERS.

FELSBURG HOLT & ULLEVIG

C-470/YOSEMITE INTERCHANGE
CONSTRUCTION TRAFFIC CONTROL TAB

DATE	PROJECT NO.	DESIGNED BY JGF / DRAWN BY / CHECKED BY RRF	SHEET NO. 1 OF 7 SHEETS	DRAWING NO.
FEB 96	95-088			TC-1

G:\95088\ACAD\A50885C7.dwg, LT, 02/15/96 at 15:13
COMPUTER GENERATED DRAWING DO NOT ALTER MANUALLY

AS CONSTRUCTED			
NO REVISIONS ☐	REVISED ☐	VOID ☐	

FEDERAL RD REGION NO.	DIVISION	PROJ. NO.	SHEET NO.	TOTAL SHEETS
VIII	COLORADO	CC 4701-082	111	

REVISIONS		

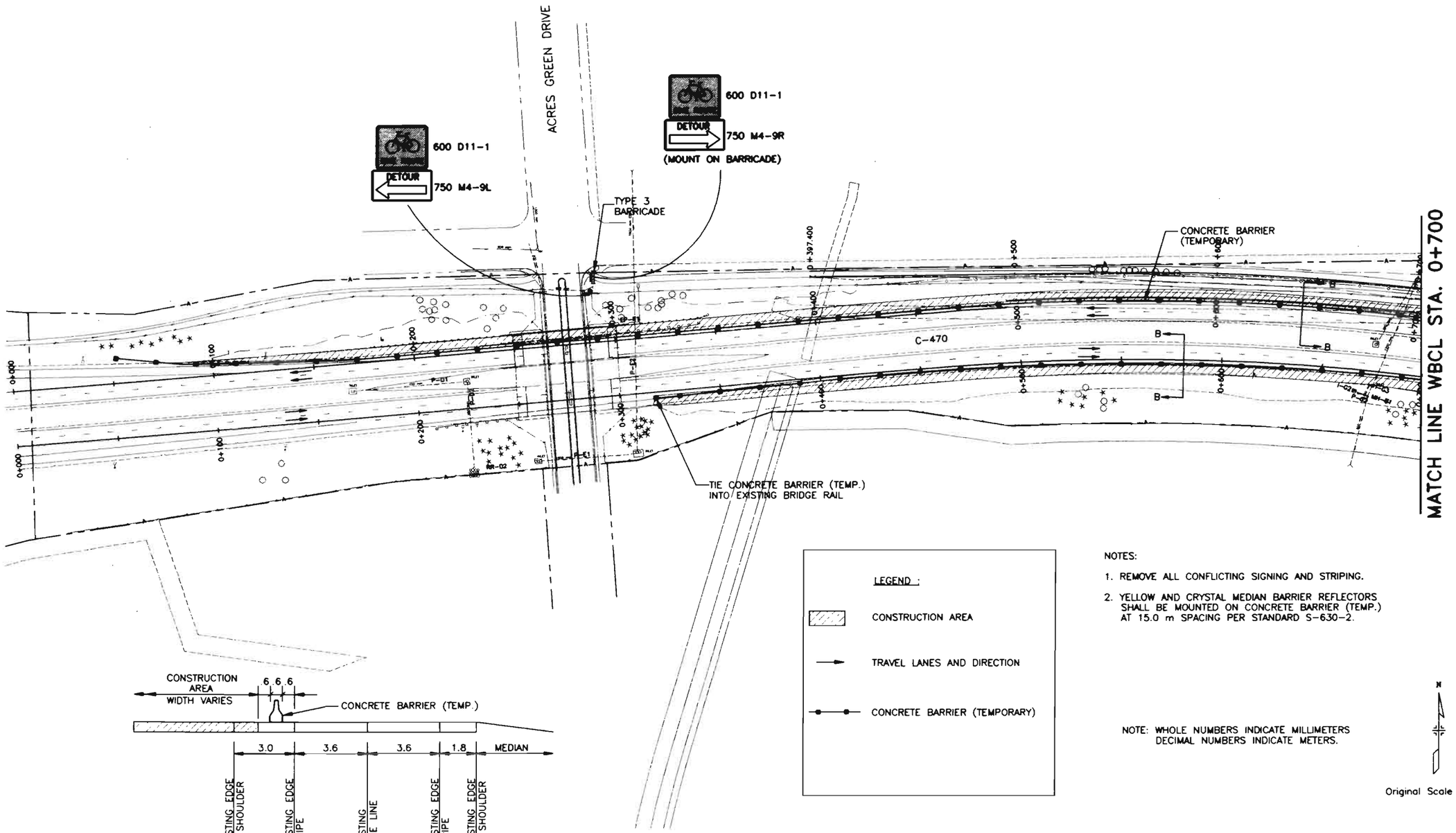

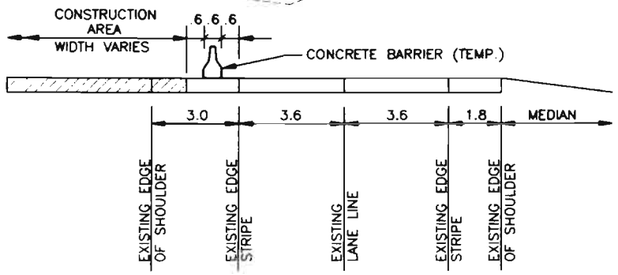

SECTION B-B

LEGEND :

- CONSTRUCTION AREA
- TRAVEL LANES AND DIRECTION
- CONCRETE BARRIER (TEMPORARY)

NOTES:

1. REMOVE ALL CONFLICTING SIGNING AND STRIPING.
2. YELLOW AND CRYSTAL MEDIAN BARRIER REFLECTORS SHALL BE MOUNTED ON CONCRETE BARRIER (TEMP.) AT 15.0 m SPACING PER STANDARD S-630-2.

NOTE: WHOLE NUMBERS INDICATE MILLIMETERS
DECIMAL NUMBERS INDICATE METERS.

N

Original Scale 1:1000

FELSBURG HOLT & ULLEVIG

C-470/YOSEMITE INTERCHANGE

CONSTRUCTION TRAFFIC CONTROL PLAN C-470 WBCL STA. 0+000 TO STA. 0+700

DATE	PROJECT NO.	DESIGNED BY JF	DRAWN BY SS	CHECKED BY DB	SHEET NO. ____ OF ____ SHEETS	DRAWING NO.
FEB 96	95-088					TC-2

D:\95088\ACAD\A5088501.dwg, 2/7/02/96 at 11:53
COMPUTER GENERATED DRAWING DO NOT ALTER MANUALLY

AS CONSTRUCTED				
NO REVISIONS	REVISED	VOID		

FEDERAL RD REGION NO.	DIVISION	PROJ. NO.	SHEET NO.	TOTAL SHEETS
VIII	COLORADO	CC 4701-082	112	

REVISIONS		

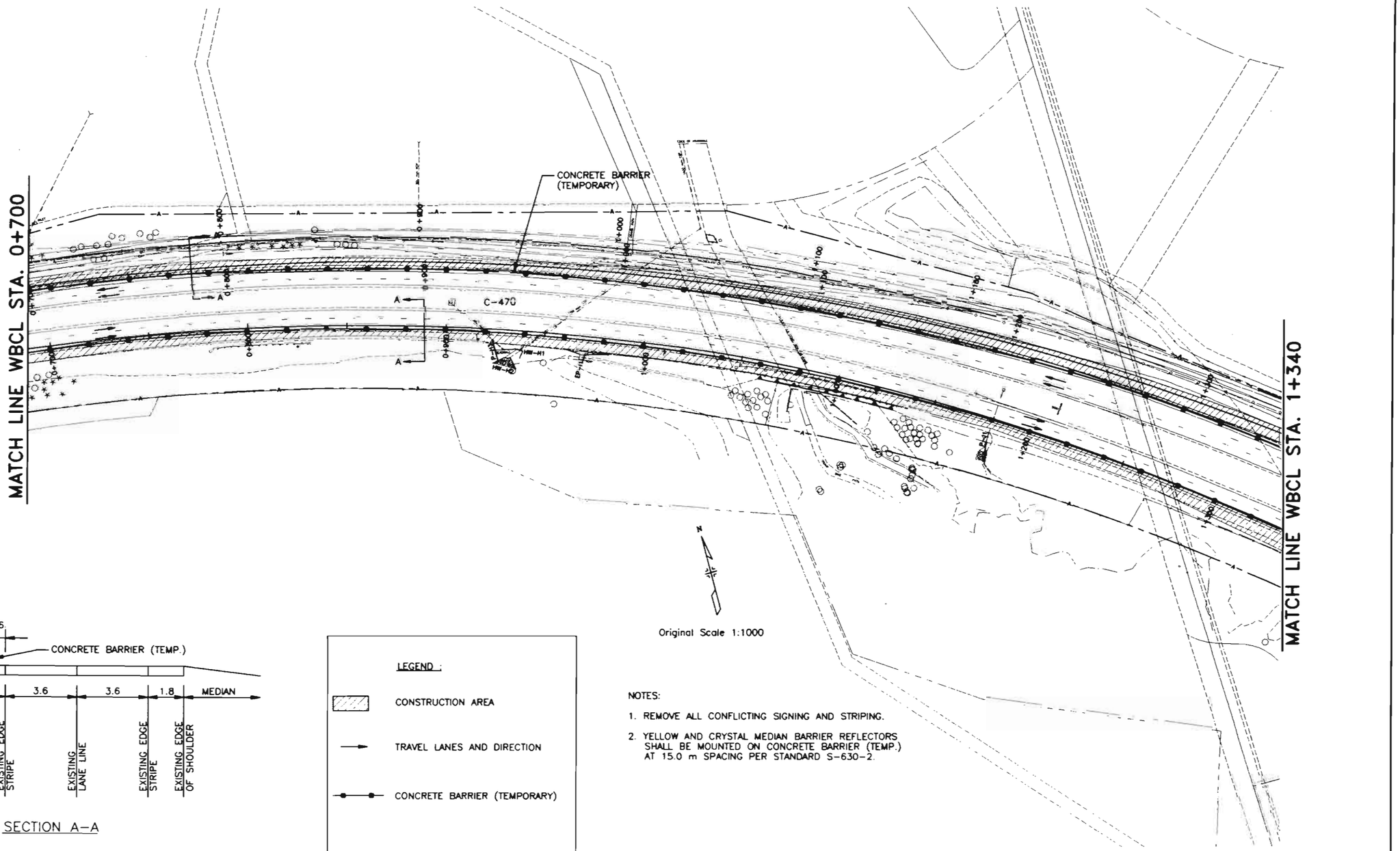

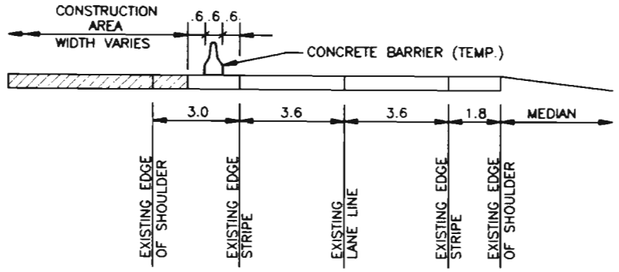

SECTION A-A

LEGEND :

- CONSTRUCTION AREA
- TRAVEL LANES AND DIRECTION
- CONCRETE BARRIER (TEMPORARY)

NOTES:

1. REMOVE ALL CONFLICTING SIGNING AND STRIPING.
2. YELLOW AND CRYSTAL MEDIAN BARRIER REFLECTORS SHALL BE MOUNTED ON CONCRETE BARRIER (TEMP.) AT 15.0 m SPACING PER STANDARD S-630-2.

NOTE: WHOLE NUMBERS INDICATE MILLIMETERS
DECIMAL NUMBERS INDICATE METERS.

FELSBURG HOLT & ULLEVIG

C-470/YOSEMITE INTERCHANGE

CONSTRUCTION TRAFFIC CONTROL PLAN
C-470 WBCL STA. 0+700 TO STA. 1+340

DATE	PROJECT NO.	DESIGNED BY	DRAWN BY	CHECKED BY	SHEET NO.	SHEETS	DRAWING NO.
FEB 96	95-088	JF	SS	DB			TC-3

COMPUTER GENERATED DRAWING DO NOT ALTER MANUALLY

AS CONSTRUCTED				
NO REVISIONS	REVISED	VOID		

FEDERAL RD REGION NO.	DIVISION	PROJ. NO.	SHEET NO.	TOTAL SHEETS
VIII	COLORADO	CC 4701-082	113	

REVISIONS		

LEGEND :

- CONSTRUCTION AREA
- TRAVEL LANES AND DIRECTION
- CONCRETE BARRIER (TEMPORARY)

NOTES:

1. REMOVE ALL CONFLICTING SIGNING AND STRIPING.
2. YELLOW AND CRYSTAL MEDIAN BARRIER REFLECTORS SHALL BE MOUNTED ON CONCRETE BARRIER (TEMP.) AT 15.240 m SPACING PER STANDARD S-630-2.

NOTE: WHOLE NUMBERS INDICATE MILLIMETERS
DECIMAL NUMBERS INDICATE METERS.

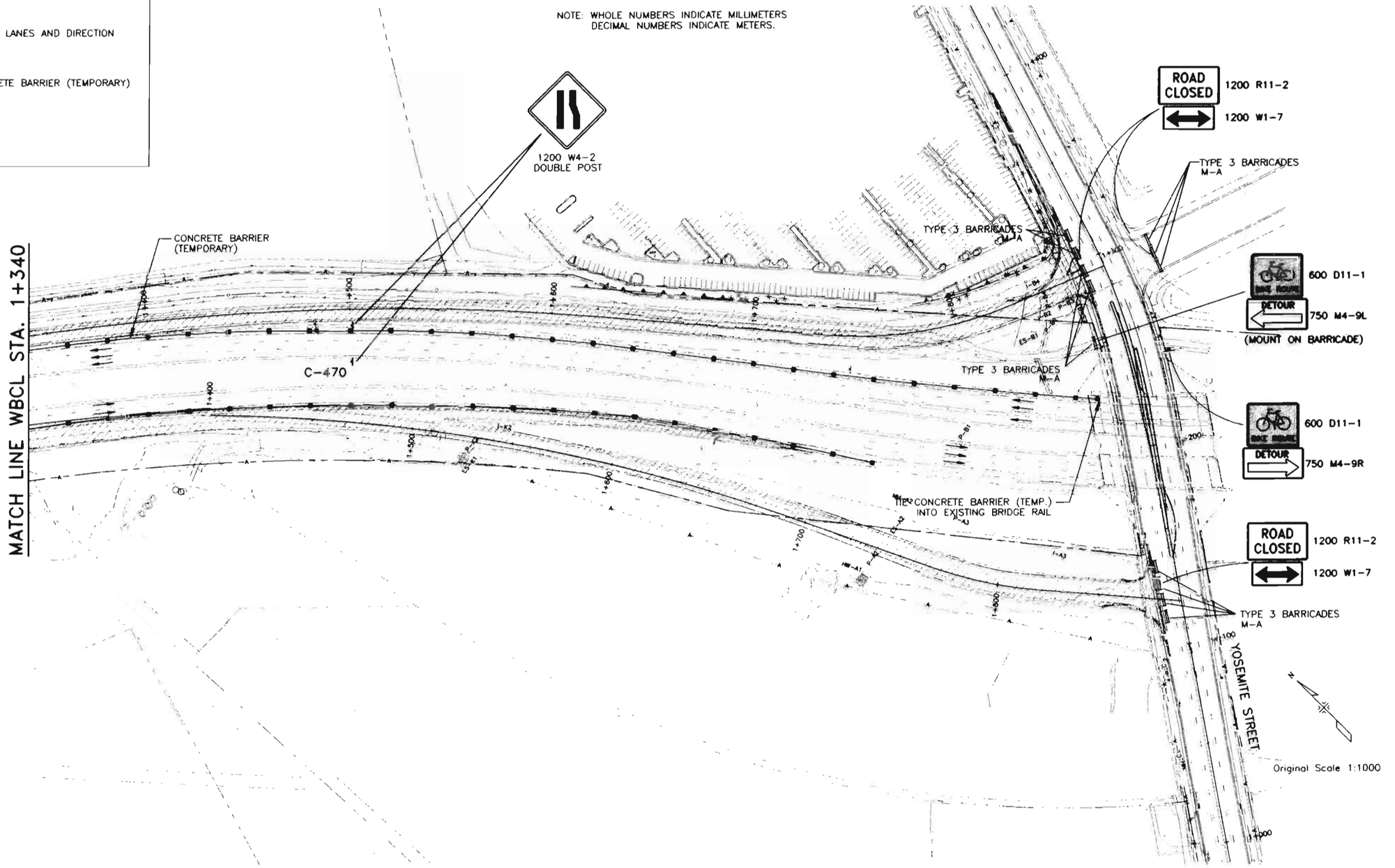

FELSBURG HOLT & ULLEVIG

C-470/YOSEMITE INTERCHANGE

CONSTRUCTION TRAFFIC CONTROL PLAN
C-470 WBCL STA. 1+340 TO STA. 1+878.735

DATE	PROJECT NO	DESIGNED BY JF	SHEET NO.	DRAWING NO.
FEB 96	95-088	DRAWN BY SS CHECKED BY DB	OF SHEETS	TC-4

COMPUTER GENERATED DRAWING DO NOT ALTER MANUALLY

AS CONSTRUCTED			
NO REVISIONS ☐	REVISED ☐	VOID ☐	

FEDERAL RD REGION NO.	DIVISION	PROJ. NO.	SHEET NO.	TOTAL SHEETS
VIII	COLORADO	CC 4701-082	114	

REVISIONS		

DESIGN VELOCITY 45 MPH (72 km/h)

		1800 LB. VEHICLE			4500 LB. VEHICLE		
ROW	SAND MASS (kg)	EXIT VEH (km/h)	AVE. G'S FOR ROW	IMPULSE TIME	EXIT VEH (km/h)	AVE. G'S FOR ROW	IMPULSE TIME
0		45.0			45.0		
1	400	36.8	7.5	0.05	41.3	2.8	0.05
2	700	26.5	7.3	0.06	35.8	3.8	0.05
3	1400	14.9	5.4	0.10	27.3	4.7	0.06
4	2800	5.8	2.1	0.20	16.8	4.1	0.09
5	2800	2.3	.3	0.50	10.4	1.5	0.15
6	2800	.9	.0	1.29	6.4	0.7	0.24
7	4200	.3	.0	3.52	3.3	0.3	0.42

DRUMS SHALL BE PLACED 150 MM APART.

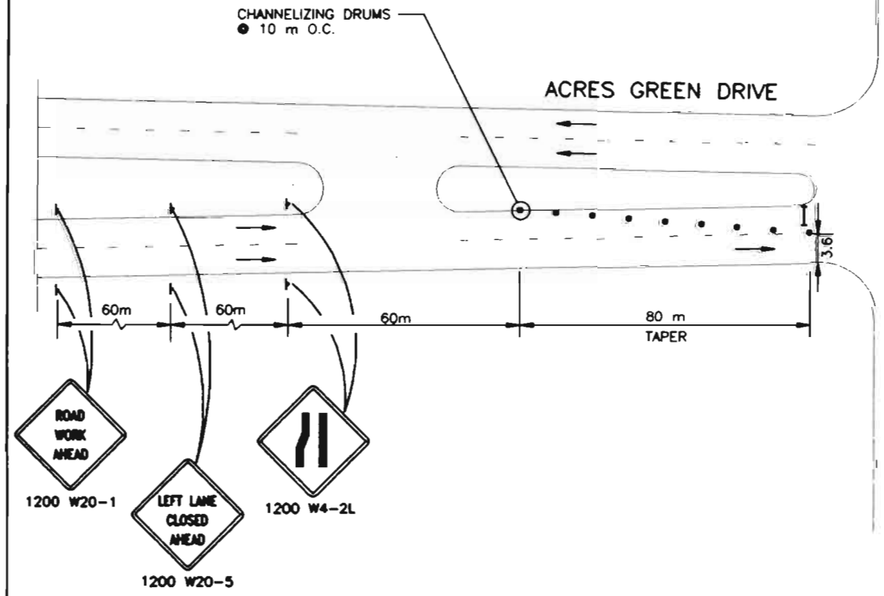

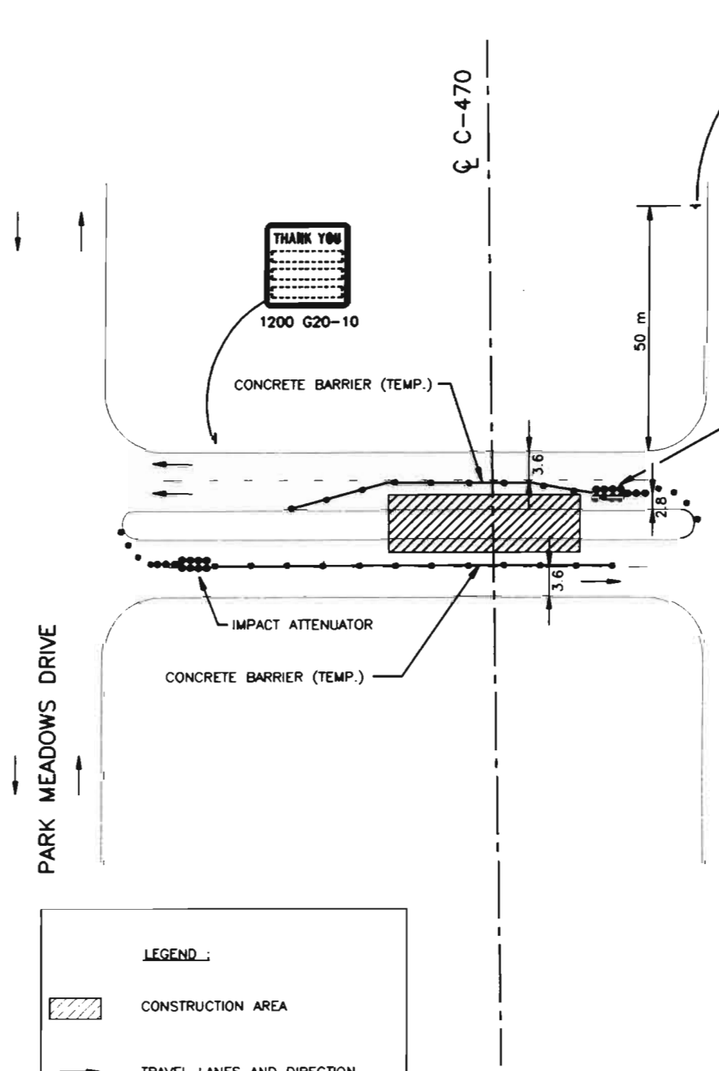

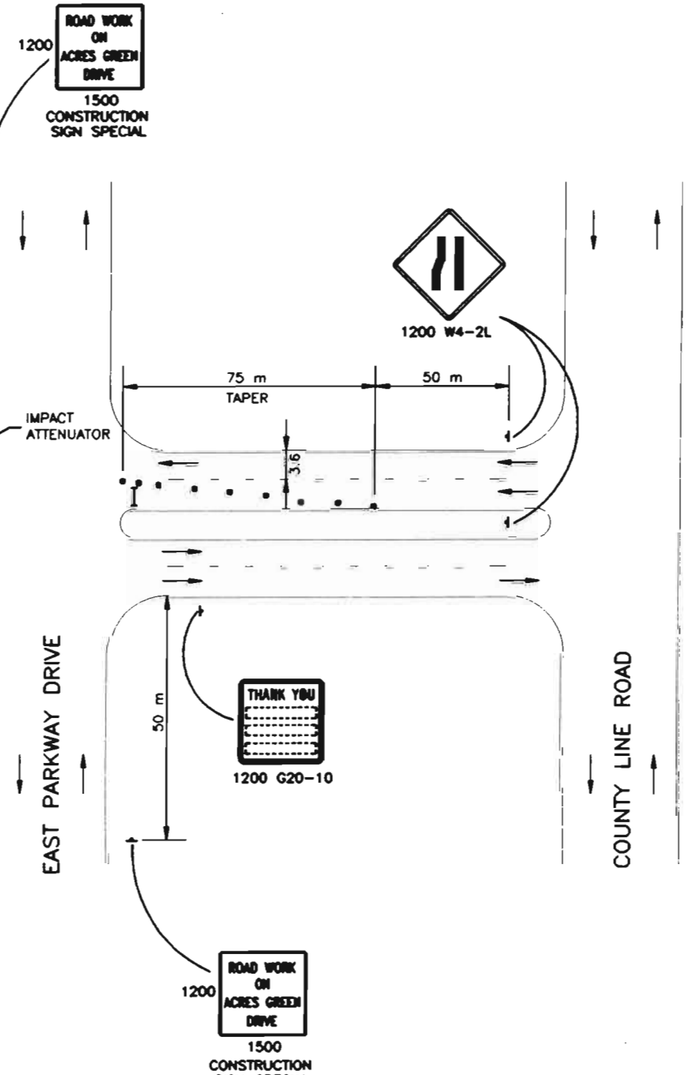

LEGEND :

- CONSTRUCTION AREA
- TRAVEL LANES AND DIRECTION
- CHANNELIZING DEVICE
- CONCRETE BARRIER (TEMP.)
- ADVANCED WARNING FLASHING OR SEQUENCING ARROW PANEL (C TYPE)

NOT TO SCALE

NOTE:
THIS PLAN TO BE USED IN CONSTRUCTION WITH ALL OTHER TRAFFIC CONTROL PLANS.

FELSBURG HOLT & ULLEVIG

C-470/YOSEMITE INTERCHANGE

CONSTRUCTION TRAFFIC CONTROL PLAN
ACRES GREEN DRIVE

DATE	PROJECT NO.	DESIGNED BY	SHEET NO.	DRAWING NO.
FEB 96	95-088	DRAWN BY SS CHECKED BY	OF X SHEETS	TC-5

G:\95088\ACAD\A5088504.dwg, 1:1, 02/14/96 at: 14:49
COMPUTER GENERATED DRAWING DO NOT ALTER MANUALLY

AS CONSTRUCTED			
NO REVISIONS ☐	REVISED ☐	VOID ☐	

FEDERAL RD REGION NO.	DIVISION	PROJ. NO.	SHEET NO.	TOTAL SHEETS
VIII	COLORADO	CC 4701-082	115	

REVISIONS		

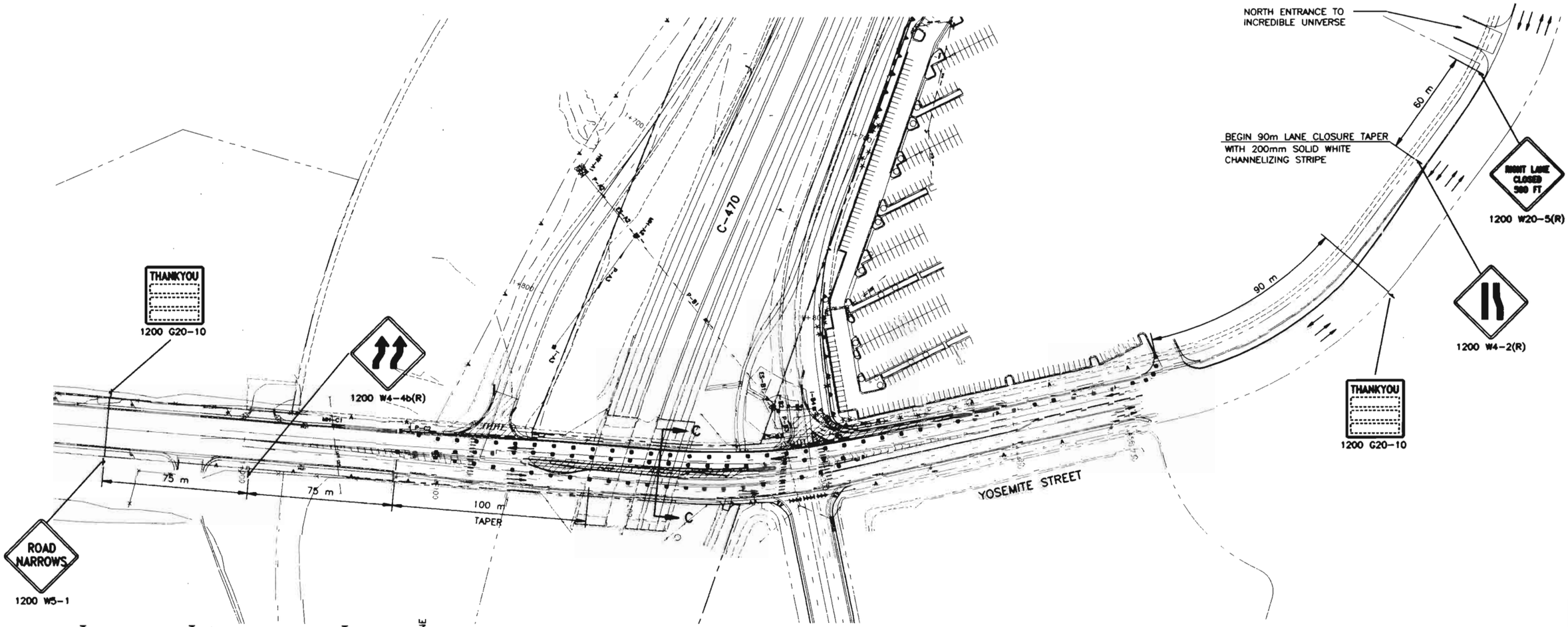

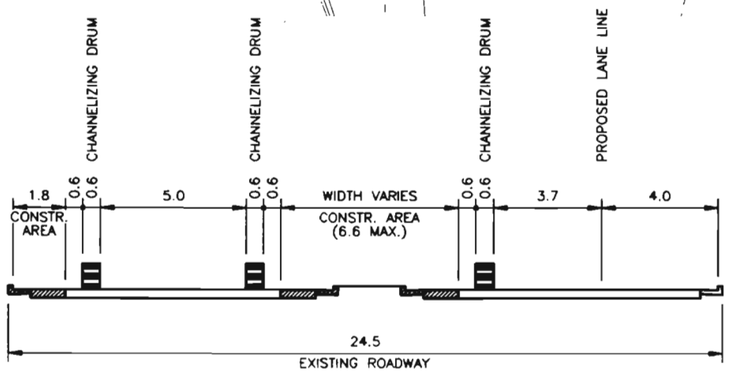

SECTION C-C

LEGEND :

- CONSTRUCTION AREA
- TRAVEL LANES AND DIRECTION
- CHANNELIZING DEVICE
- BARRICADE

NOTES:

1. REMOVE ALL CONFLICTING SIGNING AND STRIPING.
2. YELLOW AND CRYSTAL MEDIAN BARRIER REFLECTORS SHALL BE MOUNTED ON CONCRETE BARRIER (TEMP.) AT 15.240 m SPACING PER STANDARD S-630-2.

NOTE: WHOLE NUMBERS INDICATE MILLIMETERS
DECIMAL NUMBERS INDICATE METERS.

Original Scale 1:1000

FELSBURG HOLT & ULLEVIG

C-470/YOSEMITE INTERCHANGE

CONSTRUCTION TRAFFIC CONTROL PLAN
YOSEMITE ST. STA. 1+000 TO 1+456.699

DATE	PROJECT NO.	DESIGNED BY JE	DRAWN BY SS	CHECKED BY JE	SHEET NO.	OF SHEETS	DRAWING NO.
FEB 96	95-088						TC-5

D:\95088\4CAD\A95088525.dwg, 1:1, 07/14/96 at 15:44

COMPUTER GENERATED DRAWING DO NOT ALTER MANUALLY

AS CONSTRUCTED			
NO REVISIONS ☐	REVISED ☐	VOID ☐	

FEDERAL RD REGION NO.	DIVISION	PROJ. NO.	SHEET NO.	TOTAL SHEETS
VIII	COLORADO	CC 4701-082	116	

REVISIONS		

NOTE:
THIS PLAN TO BE USED IN CONSTRUCTION WITH ALL OTHER TRAFFIC CONTROL PLANS.

N

Original Scale 1:10 000

SUGGESTED CONSTRUCTION TRAFFIC CONTROL
ADVANCED CONSTRUCTION SIGNING

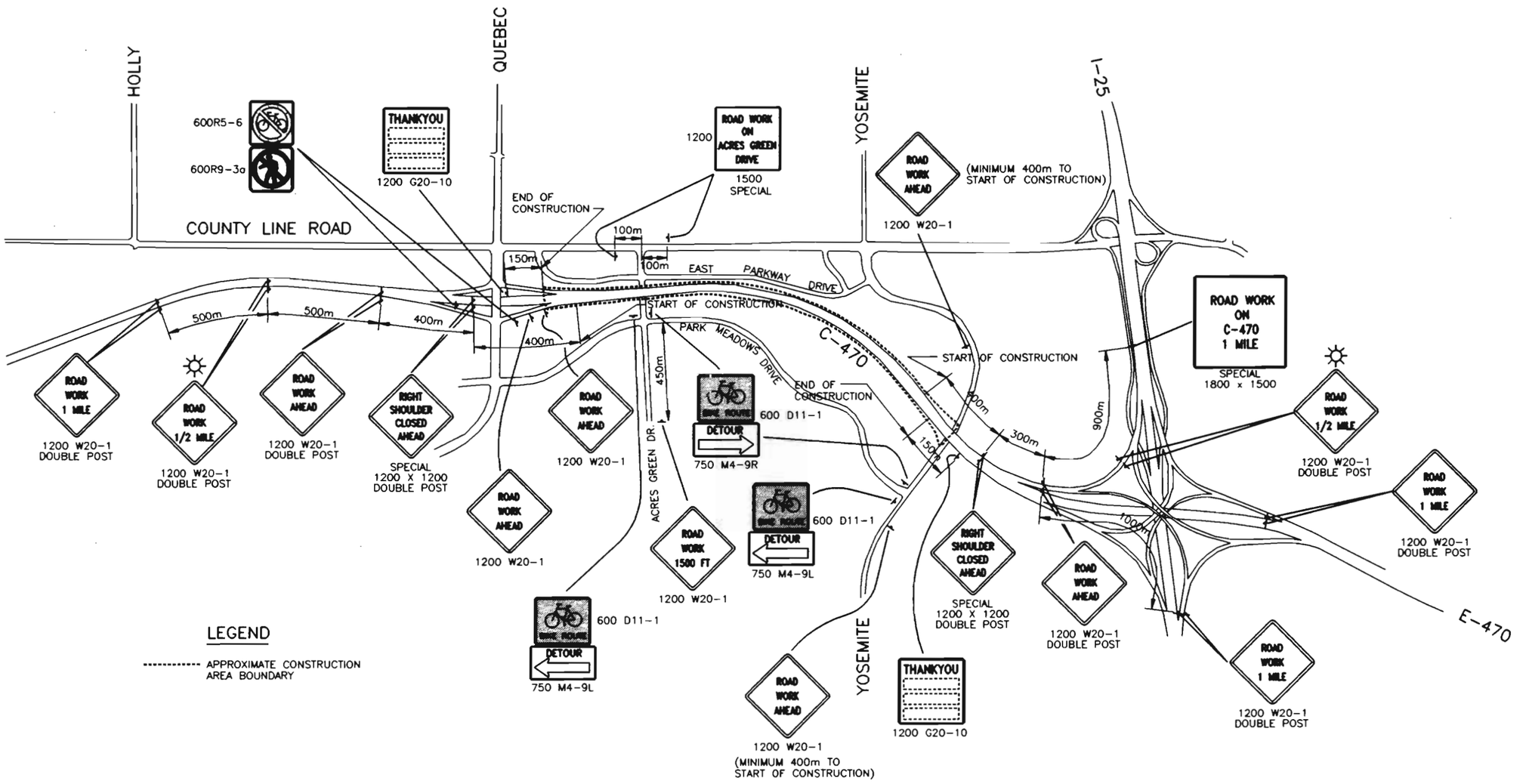

LEGEND

---------- APPROXIMATE CONSTRUCTION AREA BOUNDARY

FELSBURG HOLT & ULLEVIG

C-470/YOSEMITE INTERCHANGE				
SUGGESTED CONSTRUCTION TRAFFIC CONTROL ADVANCE CONSTRUCTION SIGNING				
DATE	PROJECT NO.	DESIGNED BY JF DRAWN BY SD CHECKED BY DB	SHEET NO. 4 OF 4 SHEETS	DRAWING NO. TC-7
FEB 96	95-088			

G:\95088\ACAD\A5088506.dwg, 1:1, 02/14/96 at 15:22

COMPUTER GENERATED DRAWING DO NOT ALTER MANUALLY

AS CONSTRUCTED					
NO REVISIONS		REVISED		VOID	

FEDERAL RD REGION NO.	DIVISION	PROJ. NO.	SHEET NO.	TOTAL SHEETS
VIII	COLORADO	CC 4701-082	117	

REVISIONS		

MOBILE PAVEMENT MARKING ZONE

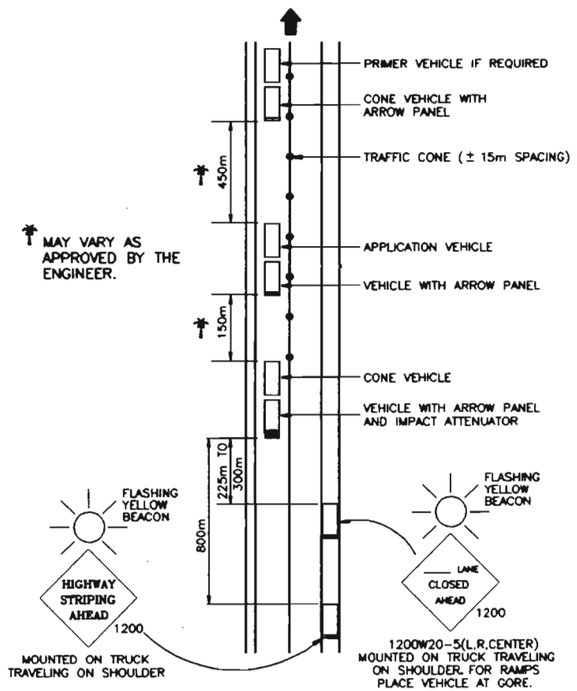

CONSTRUCTION TRAFFIC CONTROL DEVICES FOR MOBILE PAVEMENT MARKING ZONE

SIGN CODE	LEGEND	SIZE (mm)	PANEL SIZE EACH A	B	C	OTHER
*1200W20-5( )	-----LANE/CLOSED/(Distance)	1200x1200		1		
SPECIAL	HIGHWAY/STRIPING/AHEAD	1200x1200		1		
	SIGN TOTALS			**2		
	FLASHING BEACON (PORTABLE)					**2 EA.
	FLASHING ARROW PANEL	(C TYPE)				**3 EA.
	TRAFFIC CONES	900				**300 EA.
	MOBILE PAVEMENT MARKING ZONE					4 DAY

** THESE ITEMS SHALL BE INCLUDED IN THE PAY ITEM "MOBILE PAVEMENT MARKING ZONE" AND WILL NOT BE PAID FOR SEPARATELY.

CONSTRUCTION TRAFFIC CONTROL DEVICES FOR ADDITIONAL WORK WITHIN MOBILE PAVEMENT MARKING ZONE

SIGN CODE	LEGEND	SIZE (mm)	PANEL SIZE EACH A	B	C	OTHER
1200W20-1	ROAD/WORK/AHEAD	1200x1200		8		
1200W20-5( )	-----LANE/CLOSED/(Distance)	1200x1200		8		
1200W4-2( )	Transition Symbol	1200x1200		8		
1200W20-7a	Flagger Symbol	1200x1200		8		
1200W20-7b	BE/PREPARED/TO STOP	1200x1200		8		
	SIGN TOTALS			40		
	FLASHING ARROW PANEL	(C TYPE)				2 EA.
	TRAFFIC CONES	900				200 EA.

NOTE: ALL ITEMS IN THIS TABULATION SHALL BE INCLUDED IN THE PAY ITEM "MOBILE PAVEMENT MARKING ZONE" AND WILL NOT BE PAID FOR SEPARATELY. ALL ITEMS IN THIS TABULATION ARE FOR THE INSTALLATION OF CROSSWALK STRIPES AND PAVEMENT MARKING SYMBOLS AND LEGENDS. LANE CLOSURES FOR THIS WORK SHALL CONFORM TO M&S STANDARD S-630-1 CASES V THROUGH IX.

FELSBURG HOLT & ULLEVIG

C-470/YOSEMITE INTERCHANGE				
CONSTRUCTION TRAFFIC CONTROL PLAN				
DATE FEB 96	PROJECT NO. 95-088	DESIGNED BY JGF DRAWN BY CHECKED BY DB	SHEET NO. 8 OF 8 SHEETS	DRAWING NO. TC-8

G:\95088\ACAD\A5088508.dwg, 1:1, 02/15/96 at 07:31
COMPUTER GENERATED DRAWING DO NOT ALTER MANUALLY

AS CONSTRUCTED

NO REVISIONS ☐ REVISED ☐ VOID ☐

FEDERAL RD REGION NO.	DIVISION	PROJ. NO.	SHEET NO.	TOTAL SHEETS
VIII	COLORADO	CC 4701-082	118	

REVISIONS		

DESIGN VELOCITY 60 MPH (96 km/h)

		1800 LB. VEHICLE			4500 LB. VEHICLE		
ROW	SAND MASS (kg)	EXIT VEH (km/h)	AVE. G'S FOR ROW	IMPULSE TIME	EXIT VEH (km/h)	AVE. G'S FOR ROW	IMPULSE TIME
0		60.0			60.0		
1	200	54.0	7.6	0.04	57.5	3.3	0.03
2	200	48.6	6.6	0.04	55.0	3.1	0.04
3	200	43.8	5.0	0.04	52.7	2.8	0.04
4	400	35.8	7.0	0.05	48.4	4.8	0.04
5	800	24.8	7.4	0.07	41.1	7.3	0.05
6	1400	13.9	4.7	0.11	31.3	7.9	0.06
7	2800	5.5	2.7	0.21	19.3	6.8	0.08
8	2800	2.1	.3	0.54	11.9	2.6	0.13
9	2800	.8	.0	1.38	7.3	1.0	0.21
10	4200	.3	.0	3.77	3.8	0.4	0.37

760 MM ON TRAFFIC APPROACH SIDE

2100 1400 1400 1400 700 400 400 200 200 200

2100 1400 1400 1400 700 400

300 MM MIN. TO SOLID OBJECT

DRUMS SHALL BE PLACED 150 MM APART.
DESIGN VELOCITY 60 MPH (96 km/h)

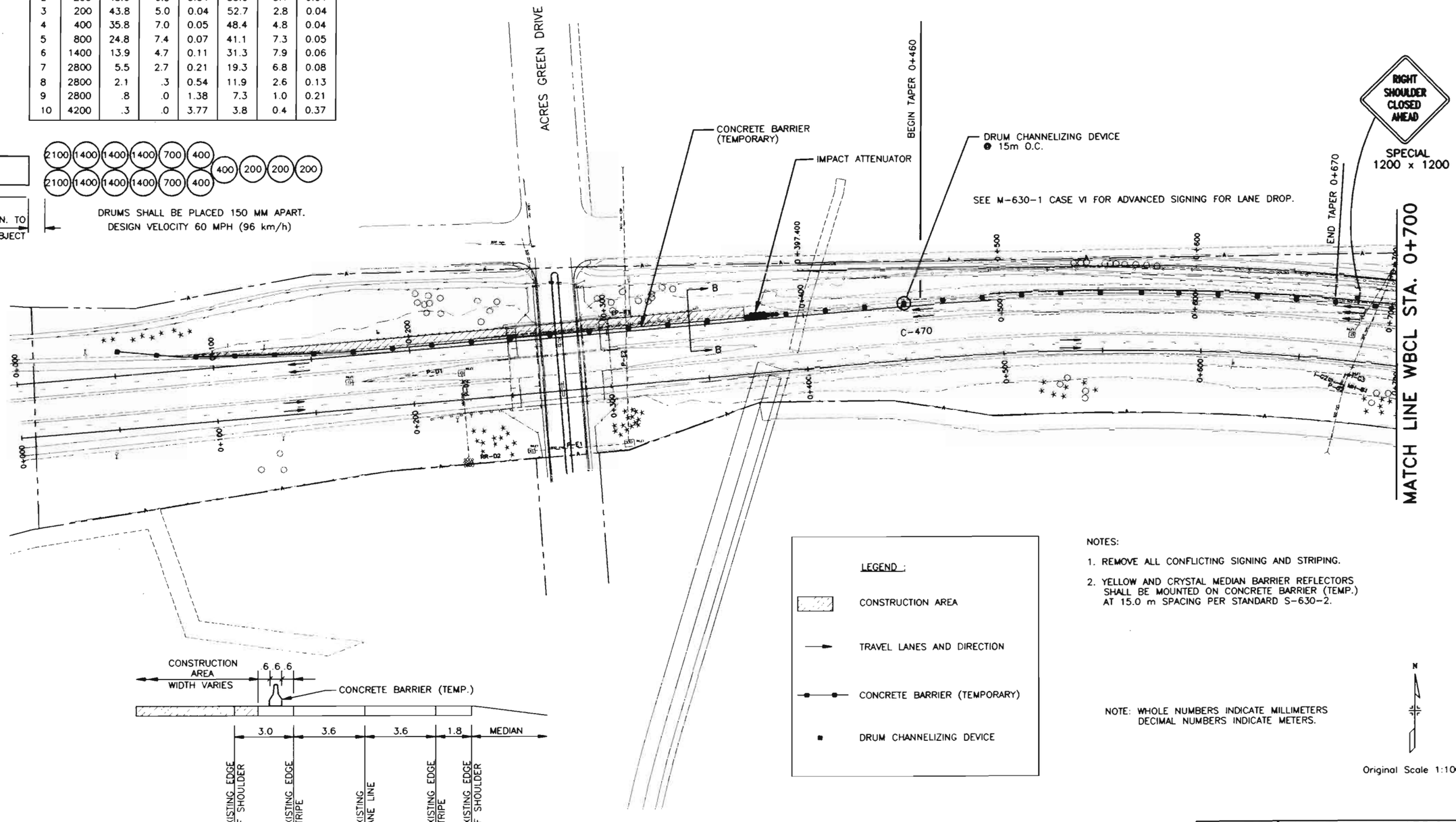

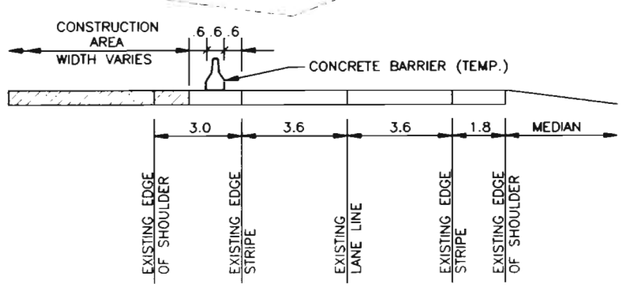

SECTION B-B

LEGEND :

- CONSTRUCTION AREA
- TRAVEL LANES AND DIRECTION
- CONCRETE BARRIER (TEMPORARY)
- DRUM CHANNELIZING DEVICE

NOTES:

1. REMOVE ALL CONFLICTING SIGNING AND STRIPING.
2. YELLOW AND CRYSTAL MEDIAN BARRIER REFLECTORS SHALL BE MOUNTED ON CONCRETE BARRIER (TEMP.) AT 15.0 m SPACING PER STANDARD S-630-2.

NOTE: WHOLE NUMBERS INDICATE MILLIMETERS
DECIMAL NUMBERS INDICATE METERS.

N

Original Scale 1:1000

FELSBURG HOLT & ULLEVIG

C-470/YOSEMITE INTERCHANGE

CONSTRUCTION TRAFFIC CONTROL PLAN
BRIDGE CONSTRUCTION (RAMP OPEN)

DATE	PROJECT NO.	DESIGNED BY JL	SHEET NO.	DRAWING NO.
FEB 96	95-088	DRAWN BY SS	OF SHEETS	TC-9
		CHECKED BY DB		

COMPUTER GENERATED DRAWING DO NOT ALTER MANUALLY

AS CONSTRUCTED			
NO REVISIONS ☐	REVISED ☐	VOID ☐	

FEDERAL RD REGION NO.	DIVISION	PROJ. NO.	SHEET NO.	TOTAL SHEETS
VIII	COLORADO	CC 4701-082	119	

REVISIONS		

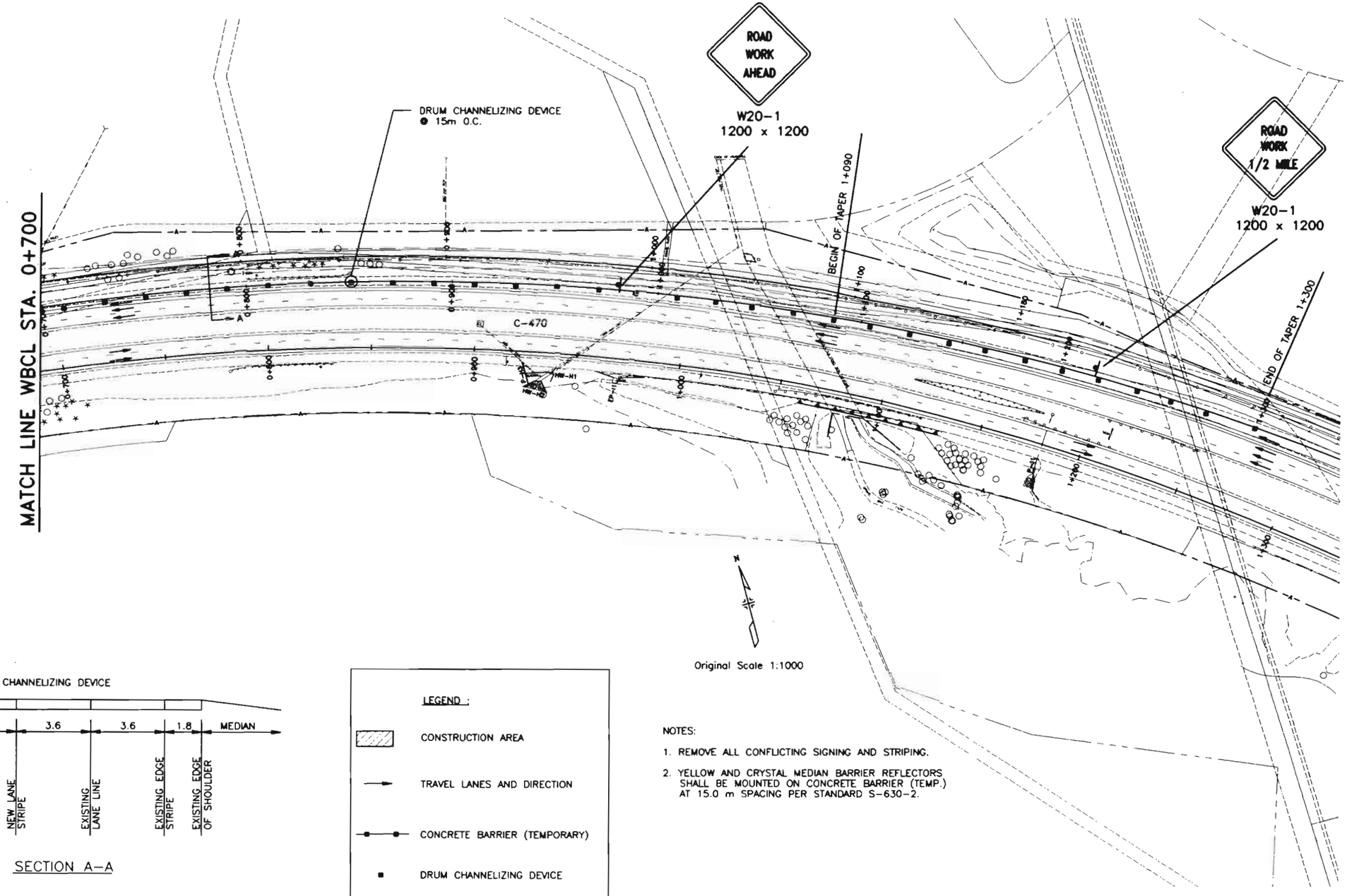

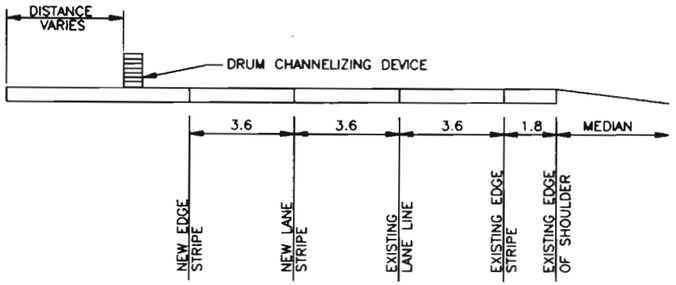

SECTION A-A

LEGEND :

- CONSTRUCTION AREA
- TRAVEL LANES AND DIRECTION
- CONCRETE BARRIER (TEMPORARY)
- DRUM CHANNELIZING DEVICE

NOTES:

1. REMOVE ALL CONFLICTING SIGNING AND STRIPING.
2. YELLOW AND CRYSTAL MEDIAN BARRIER REFLECTORS SHALL BE MOUNTED ON CONCRETE BARRIER (TEMP.) AT 15.0 m SPACING PER STANDARD S-630-2.

NOTE: WHOLE NUMBERS INDICATE MILLIMETERS
DECIMAL NUMBERS INDICATE METERS.

FELSBURG HOLT & ULLEVIG

C-470/YOSEMITE INTERCHANGE

CONSTRUCTION TRAFFIC CONTROL PLAN
BRIDGE CONSTRUCTION (RAMP OPEN)

DATE	PROJECT NO.	DESIGNED BY	SHEET NO.	DRAWING NO.
FEB 96	95-088	DRAWN BY	OF SHEETS	TC-10
		CHECKED BY		

G:\95088\ACAD\A5088510.dwg, 1:1, 02/15/96 at 09:42
COMPUTER GENERATED DRAWING DO NOT ALTER MANUALLY

AS CONSTRUCTED			
NO REVISIONS ☐	REVISED ☐	VOID ☐	

FEDERAL RD REGION NO.	DIVISION	PROJ. NO.	SHEET NO.	TOTAL SHEETS
VIII	COLORADO	CC 4701-082	170	

REVISIONS		

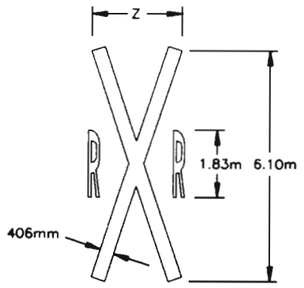

z = NORMALLY 2.44m, MAY VARY ACCORDING TO LANE WIDTH

S = 71mm TO 76mm W = 292mm TO 305mm

AREA = 6.41 SQ. M

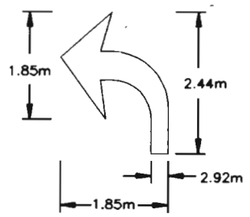

AREA = 1.44 SQ. M

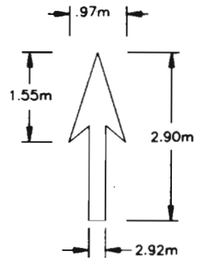

AREA = 1.16 SQ. M

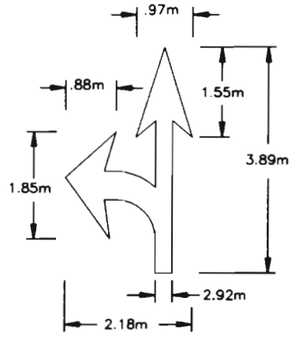

AREA = 2.55 SQ. M

DESIGNATED PAYMENT AREAS

FOR THE FOLLOWING H, W, AND S DIMENSIONS PAY:

H = 2.44 M WORDS

STOP – 2.14 SQ. M
ONLY – 2.09 SQ. M
AHEAD – 2.69 SQ. M
BUS – 1.72 SQ. M
XING – 1.86 SQ. M
LANE – 2.09 SQ. M
BIKE – 1.95 SQ. M
SCHOOL(1L) – 3.07 SQ. M
SCHOOL(2L) – 7.90 SQ. M

H = 1.22 M WORDS

BIKE – .51 SQ. M
ONLY – .56 SQ. M
LANE – .56 SQ. M
XING – .46 SQ. M

TYPICAL LETTER MEASUREMENTS

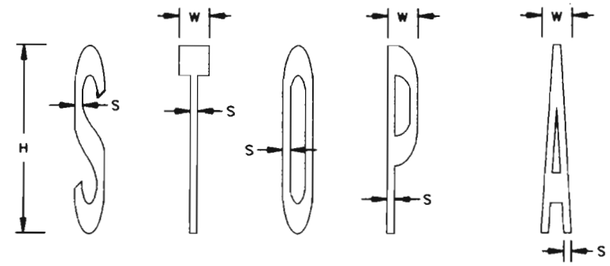

H = HEIGHT
W = WIDTH
S = STROKE

H = 2.44m
W = .39m TO .41m
S = 97mm TO 102mm

H = 1.22m
W = 196mm TO 203mm
S = 48mm TO 51mm

NOTES

IF HEIGHT IS INCREASED OR DECREASED THEN ALL MEASUREMENTS CHANGE PROPORTIONATELY. EXAMPLE: H" measurement for STOP is reduced to 1.22m From 2.44m then Square Meters = .54m (1/4 of 2.14 Sq. M).

PAVEMENT WORD AND SYMBOL MARKINGS, TRANSVERSE AND LONGITUDINAL (CONTINENTAL) CROSSWALK LINES, AND STOP LINES WILL BE PAID FOR IN SQUARE FEET USING THEIR SPECIFIC BID ITEMS.

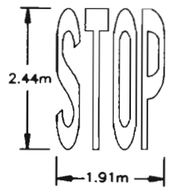

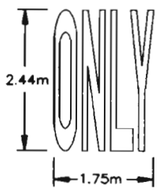

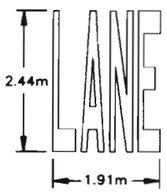

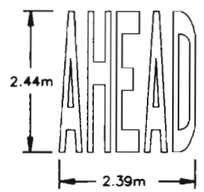

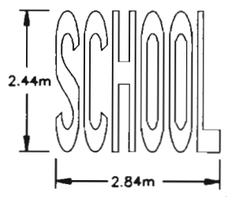

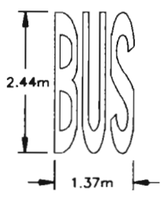

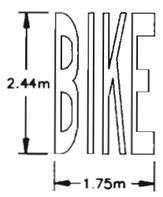

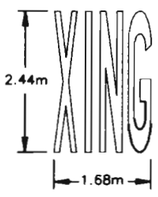

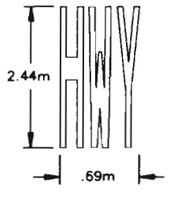

1 – LANE SCHOOL

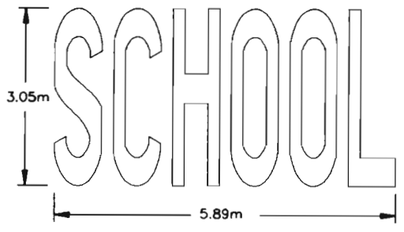

STROKE = 203mm
2 – LANE SCHOOL

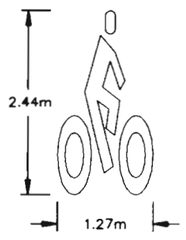

AREA = .98 SQ. M

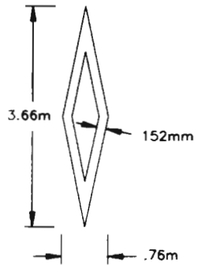

AREA = .93 SQ. M

NOTE: WHOLE NUMBERS INDICATE MILLIMETERS
DECIMAL NUMBERS INDICATE METERS.

PAVEMENT MARKING WORDS AND SYMBOLS

FELSBURG HOLT & ULLEVIG

C-470/YOSEMITE INTERCHANGE

PAVEMENT MARKING WORDS & SYMBOLS

DATE	PROJECT NO.	DESIGNED BY	DRAWN BY	CHECKED BY	SHEET NO.	OF SHEETS	DRAWING NO.
FEB 96	95-088		SS	DB	1	1	PM-1

G:\95088\ACAD\A508809.dwg, T.T., 02/16/96 at 11:02

COMPUTER GENERATED DRAWING, DO NOT ALTER MANUALLY

REVISIONS	S-614-50

FEDERAL RD REGION NO.	DIVISION	PROJ. NO.	SHEET NO.	TOTAL SHEETS
VIII	COLORADO	CC 4701-082	121	

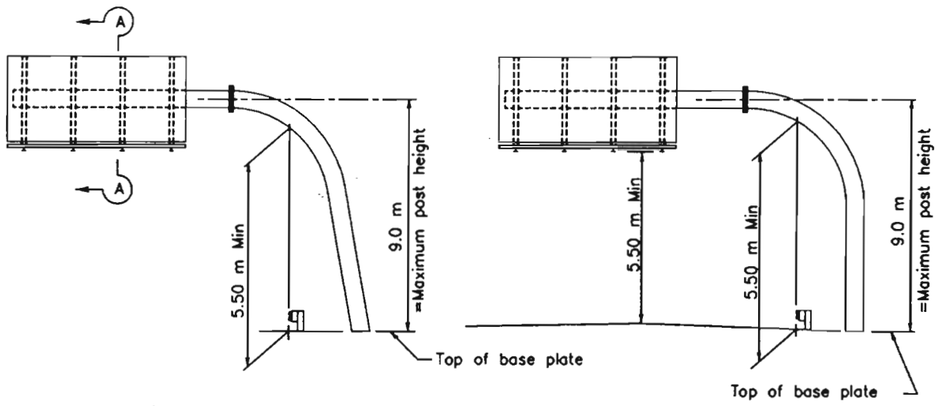

SLANTED SINGLE POST TYPE

VERTICAL SINGLE POST TYPE

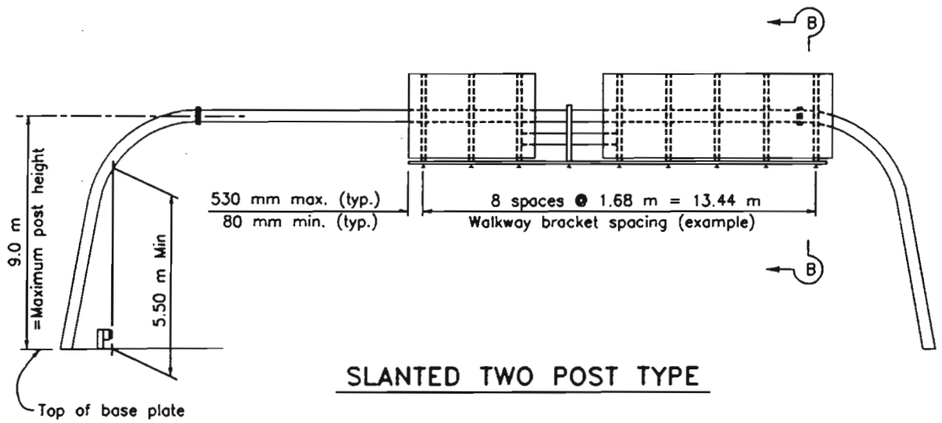

SLANTED TWO POST TYPE

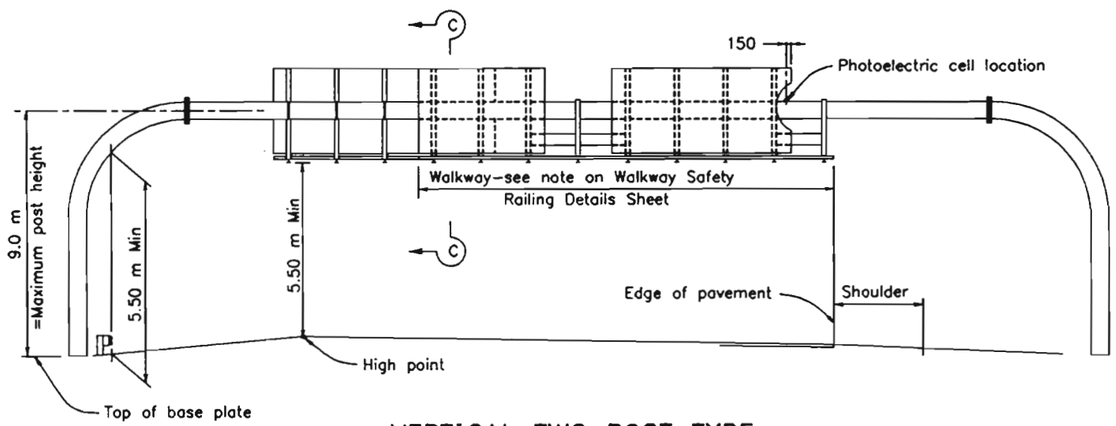

VERTICAL TWO POST TYPE

INSTRUCTIONS TO FABRICATOR

Format sheet shows:

1. Sign structure location.
2. Length of structure span.
3. Panel size and location on structure.
4. Post height to bottom of panel or mast arm elevation.
5. Base plate elevation.
6. Photoelectric cell location if required.
7. Walkway location.

INDEX

1. Instructions and examples.
2. Single post type – layout and pipe selection.
3. Two post type – layout and pipe selection.
4. Structural frame details No. 1.
5. Structural frame details No. 2.
6. Foundation details.
7. Walkway details
8. Walkway safety railing details
9. Lighting details

WALKWAY BRACKETS:

Maintain uniform spacing where possible.
Maximum spacing shall not exceed 1.68 m
Minimum clear to field splice = 300 mm ±

WALKWAY AND SAFETY RAILING:

Walkway to extend full length of sign area and be continuous between signs.

PHOTOELECTRIC CELL:

Place behind sign panel nearest right shoulder unless otherwise shown on format sheet.

NOTES

Specifications:

Design: A.A.S.H.T.O. Standard Specifications for Structural and Supports for Highway Signs, Luminaires and Traffic Signals 1994.

Construction: Standard specifications and the special provision, Revision of section 614, Overhead Sign Structures.

Wind loading: 129 km/h velocity.

Soil pressure: 86.18 MPa

Minimum vertical clearance: 5.5 m above roadway and shoulders.

Welding: All welding continuous unless otherwise noted on the plans. All welding to be done in accordance with the Standard Specifications.

If a proposed sign structure exceeds the limits of this standard in any way (span too long, height > 9 m, panel depth > 4.3m, etc.) then a special design will be required. Please contact Staff Bridge.

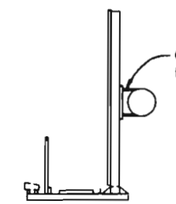

SECTION A–A

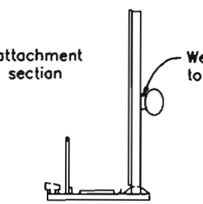

SECTION B–B

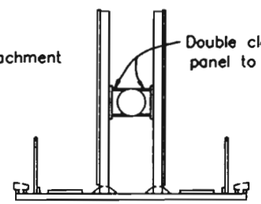

SECTION C–C

ALL DIMENSIONS ARE IN MILLIMETERS UNLESS OTHERWISE SHOWN

COLORADO DEPARTMENT OF TRANSPORTATION

OVERHEAD SIGNS – TUBULAR INSTRUCTIONS AND EXAMPLES

NO SCALE

DATE REVISED	ISSUED BY	STANDARD PLAN NO.
	STAFF TRAFFIC BRANCH	S-614-50
MS40N	DATE: Jan. 17, 1996	SHEET 1 OF 9

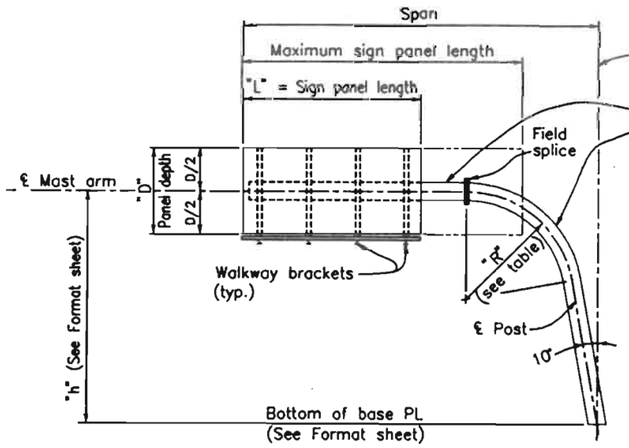

SLANTED POST CANTILEVER

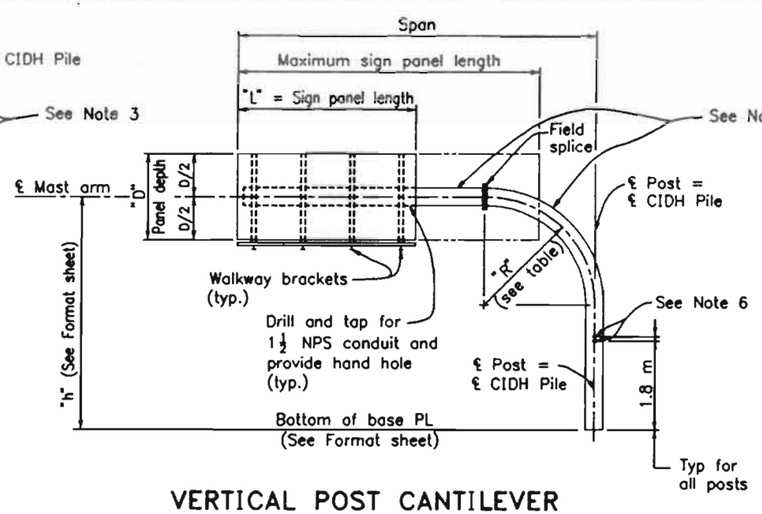

VERTICAL POST CANTILEVER

TYPE	PIPE POST "R" (m)	PIPE POST Dia (NPS) in. (mm)
D	2.44	12 (305)
G	2.44	14 (356)
K	2.44	16 (406)
N	2.44	18 (457)
Q	2.44	20 (508)
S	3.05	22 (559)
U	3.05	24 (610)

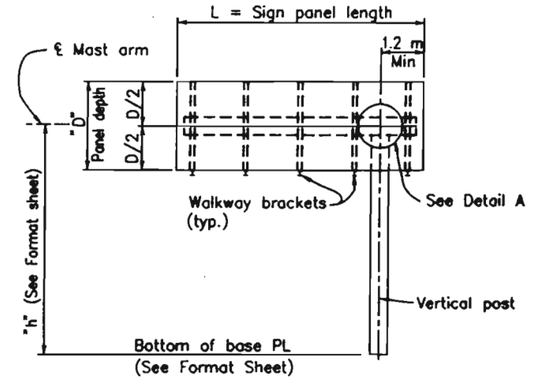

BUTTERFLY

50 % COVERAGE CHART

CANTILEVER SELECTION CHART										
"D" (m) ⟶		3.048			3.658			4.267		
"h" (m) ⟶		h≤6	6<h≤7.5	7.5<h≤9.0	h≤6	6<h≤7.5	7.5<h≤9.0	h≤6	6<h≤7.5	7.5<h≤9.0
Span ≤ (m)	6.0	12	12	14	12	14	14	14	14	16
	7.5	14	14	16	14	16	16	16	16	18
	9.0	16	16	18	16	18	18	18	18	20
	10.5	18	18	20	20	20	20	20	22	22
	12.0	20	20	22	22	22	22	22	24	24
	13.5	22	22	24	24	24	24			

80 % COVERAGE CHART

CANTILEVER SELECTION CHART										
"D" (m) ⟶		3.048			3.658			4.267		
"h" (m) ⟶		h≤6	6<h≤7.5	7.5<h≤9.0	h≤6	6<h≤7.5	7.5<h≤9.0	h≤6	6<h≤7.5	7.5<h≤9.0
Span ≤ (m)	6.0	14	16	16	14	16	18	16	18	20
	7.5	16	18	18	18	18	20	18	20	22
	9.0	18	20	20	20	20	22	20	22	24
	10.5	20	22	22	22	24	24	24	24	
	12.0	22	24	24	24					
	13.5	24								

GENERAL NOTES

1. When several sign panels are to be installed with a space between the panels, the space shall be as small as possible and 610 mm maximum.
2. All posts between base plate and field splice are extra strong pipe. All mast arms are standard pipe.
3. During sign erection the post shall be raked as necessary with the use of the leveling nuts to make the sign panel level.
4. At final position of post all top and bottom anchor bolt nuts shall be wrench tightened against base plate.
5. Drill and tap for 1½ NPS chase nipples and plug with recessed pipe plugs. Place perpendicular to sign panel axis and away from approaching traffic.
6. NPS – Nominal Pipe Size

PIPE SELECTION PROCEDURE FOR SLANTED AND VERTICAL POST CANTILEVERS

A. Coverage Percentage = $\frac{\text{Maximum sign panel length}}{\text{Span}}$

B. Pick NPS (shown in inches) from the 50% or the 80% chart. The coverage percentage chosen should be high enough to include any sign panels which may potentially be placed on this sign in the future.

C. If no tube is shown for a certain span this indicates that this span/sign panel/height combination exceeds the limits of this standard.

D. On the format sheet indicate the diameter of the tube "D", the radius "R", the height "h" and the span.

BUTTERFLY POST PIPE SELECTION PROCEDURE

A. For butterfly post use sign panel length "L" as the span length. Look up the tube size in the 80% coverage chart with known panel depth "D" and appropriate height "h".

B. Limits of this standard are "L" < 9.0 m.

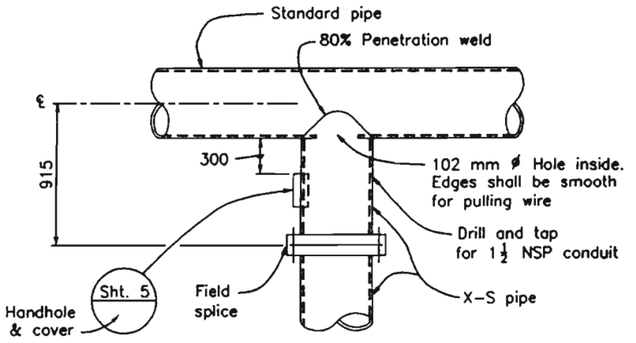

DETAIL A

ALL DIMENSIONS ARE IN MILLIMETERS UNLESS OTHERWISE SHOWN

COLORADO DEPARTMENT OF TRANSPORTATION

OVERHEAD SIGNS – TUBULAR SINGLE POST TYPE LAYOUT AND PIPE SELECTION

NO SCALE

DATE REVISED	ISSUED BY STAFF TRAFFIC BRANCH DATE: Jan. 14, 1996	STANDARD PLAN NO. S-614-50 SHEET 2 OF 9

MS40P

FEDERAL RD REGION NO.	DIVISION	PROJ. NO.	SHEET NO.	TOTAL SHEETS
VIII	COLORADO	CC 4701-082	123	

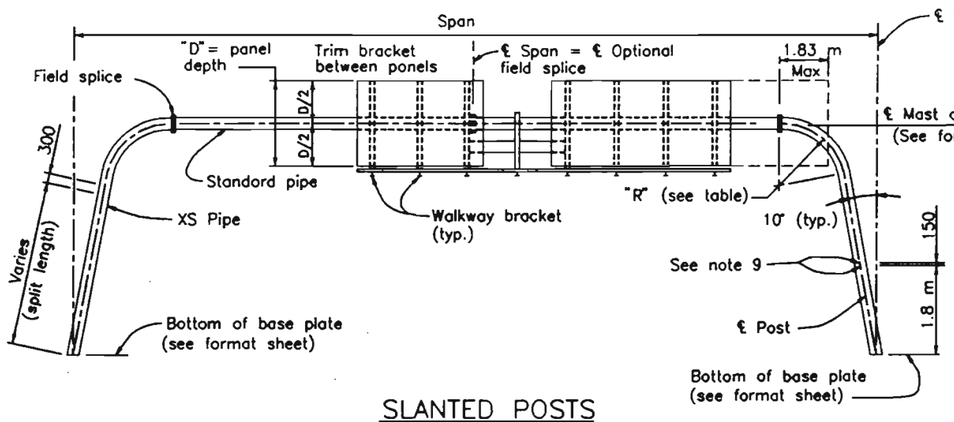

SLANTED POSTS

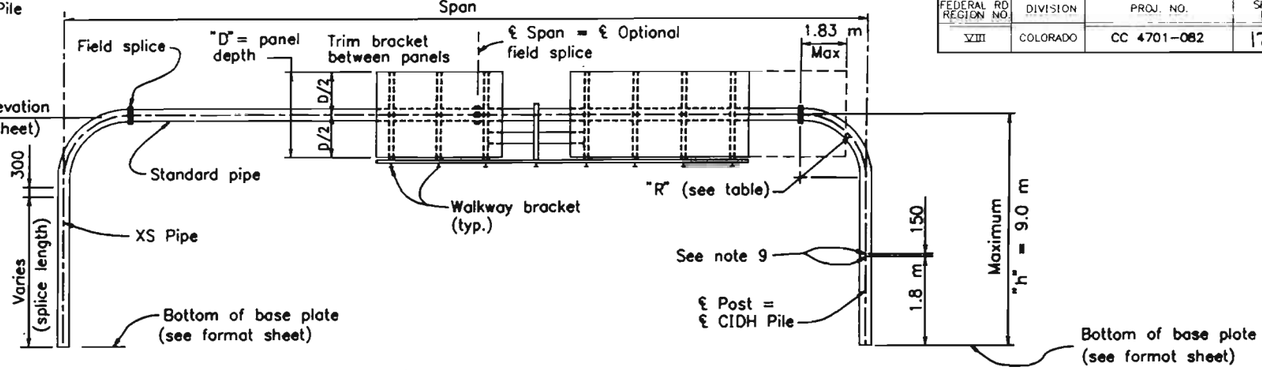

VERTICAL POSTS

* Mast arm diameter same as post.

○ Indicates camber type, see table. For signs in the column on far right use camber as provided on the left.

VERTICAL POSTS (See Note 3)

* PIPE POST			"D" ≤ 3.048	up to 80% coverage	
			3.048 < "D" ≤ 3.658	up to 58% coverage	up to 80% coverage
"R" (m)	Dia (NPS) in. (mm)	Split (mm)	3.658 < "D" ≤ 4.267	up to 45% coverage	up to 60% coverage
2.44	12 (305)	150	Span (m)	15, 16 and 17 Ⓐ	14 Ⓐ
2.44	14 (356)	150		18, 19 and 20 Ⓐ	15 and 16
2.44	16 (406)	150		21, 22, 23, and 24 Ⓑ	17, 18, 19 and 20
2.44	18 (457)	125		25, 26, 27, and 28 Ⓒ	21, 22, 23, and 24
3.05	20 (508)	125		29, 30, 31, and 32 Ⓒ	25, 26, 27, and 28
3.05	22 (559)	125		33, 34, 35 and 36 Ⓓ	29, 30, 31, and 32
3.66	24 (610)	125		37 – 43 ▲ Ⓓ •	33, 34, 35 and 36

▲ Maximum coverage tapers from (.80 to .50) for "D" ≤ 3.048, (.58 to .42) for 3.048 < "D" ≤ 3.658 and (.45 – .30) for 3.658 < "D" ≤ 4.267. Interpolate on a straight line for values between 37 and 43 m.

• Use camber type E for 41–43 m.

CAMBER

Type	"x"	"y"
Ⓐ	38	51
Ⓑ	57	76
Ⓒ	70	102
Ⓓ	89	127
Ⓔ	114	152

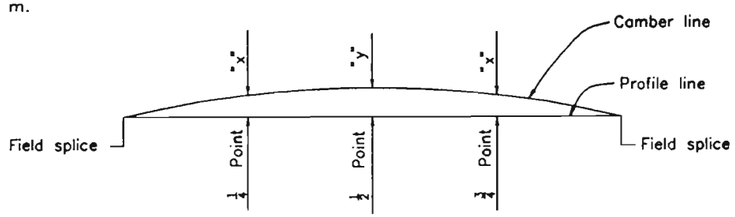

CAMBER DIAGRAM

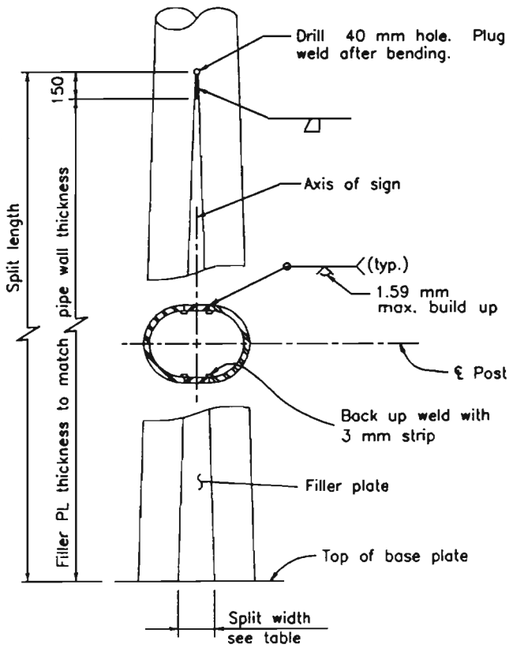

POST SPLIT DETAILS

NOTES

1. The maximum sign panel overlap onto elbow shall not exceed 1.83 m from the field splice.
2. Coverage Percentage = $\frac{\text{Maximum sign panel length}}{\text{Span}}$
3. For slanted post type subtract 5% from the allowable coverage shown for the vertical post type.
4. When several spans are to be installed with spaces between the panels, the total sign panel length is the sum of the individual sign panel lengths only.
5. All posts between base plate and field splice are extra strong pipe. All mast arms are standard pipe.
6. Before any portion of the sign frames are assembled in their final positions the Contractor shall demonstrate to the Engineer by preassembly or other approved methods that the span lengths of the frames in the no load condition match within 13 mm ± the field measured span lengths between foundations.
7. If the sign frames are erected as one unit, they shall be adequately suspended to avoid distortions or changes in span length between base plates.
8. At final position of post, all top and bottom anchor bolt nuts shall be wrench tightened against base plate.
9. Drill and tap for 1½ NPS chase nipples and plug with recessed pipe plugs. Place perpendicular to sign panel axis and away from approaching traffic.
10. Maximum difference between post heights on on individual frame = 1.5 m.
11. For standard pipe members (Mast Arms) with lengths greater than 12 m an optional bolted field splice will be permitted at ℄ of the span to facilitate galvanizing and hauling operations. For standard pipe members with lenghts greater than 24 m two optional bolted field splices will be allowed at the 1/3 points.
12. NPS = Nominal Pipe Size.

ALL DIMENSIONS ARE IN MILLIMETERS UNLESS OTHERWISE SHOWN

COLORADO DEPARTMENT OF TRANSPORTATION

OVERHEAD SIGNS – TUBULAR TWO POST TYPE LAYOUT AND PIPE SELECTION

NO SCALE

ISSUED BY	STANDARD PLAN NO.
STAFF TRAFFIC BRANCH	S-614-50
DATE REVISED	DATE: Jan. 17, 1996
	SHEET 3 OF 9

MS400

REVISIONS	S-614-50

FEDERAL RD REGION NO.	DIVISION	PROJ. NO.	SHEET NO.	TOTAL SHEETS
VIII	COLORADO	CC 4701-082	124	

Sign panel shall be sheet aluminum mounted using backing zees. All details and requirements shall be as per the Colorado DOT M+S Standards. Payment shall be made under item 614, Sign Panel (Class III).

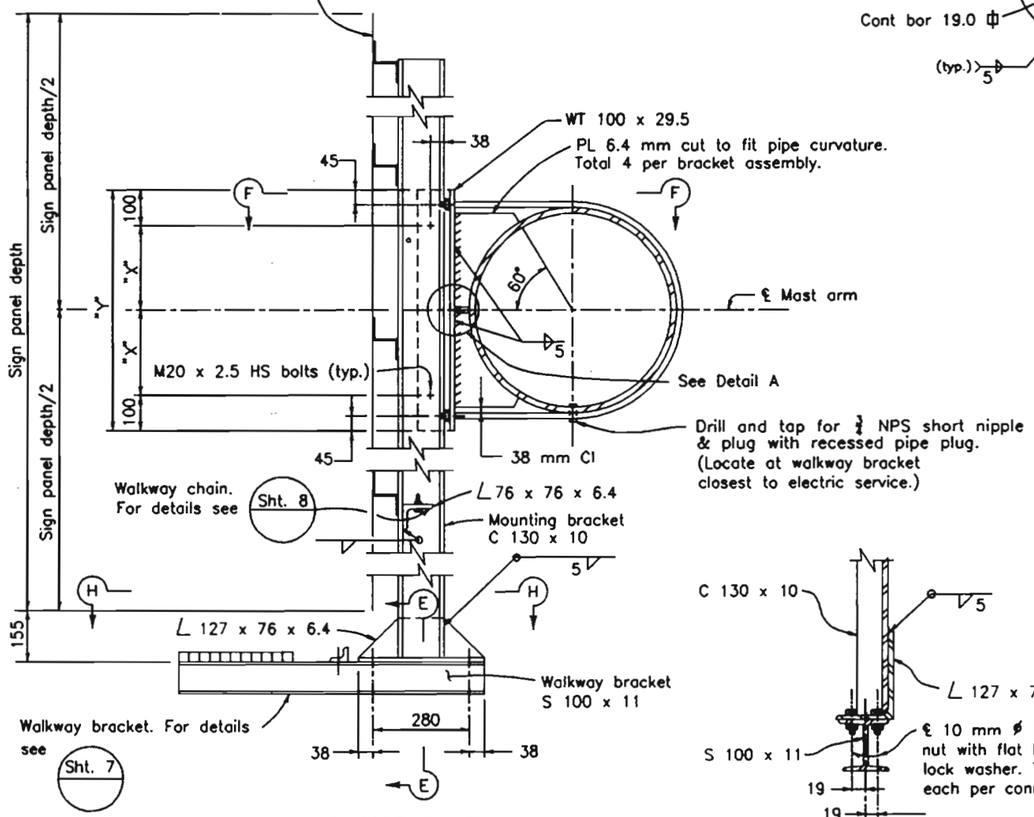

SINGLE PANEL

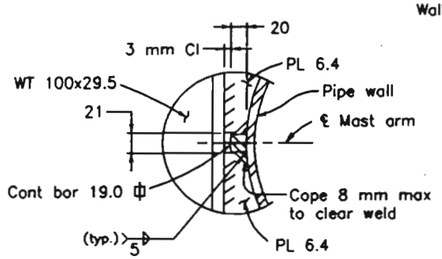

DETAIL A

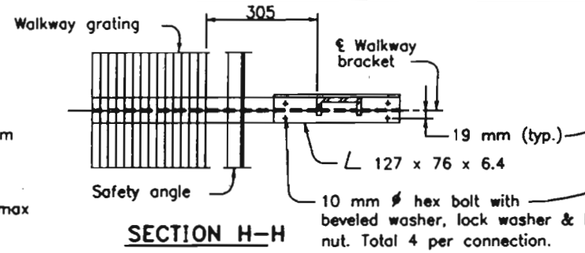

SECTION H-H

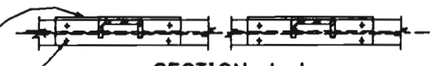

SECTION J-J

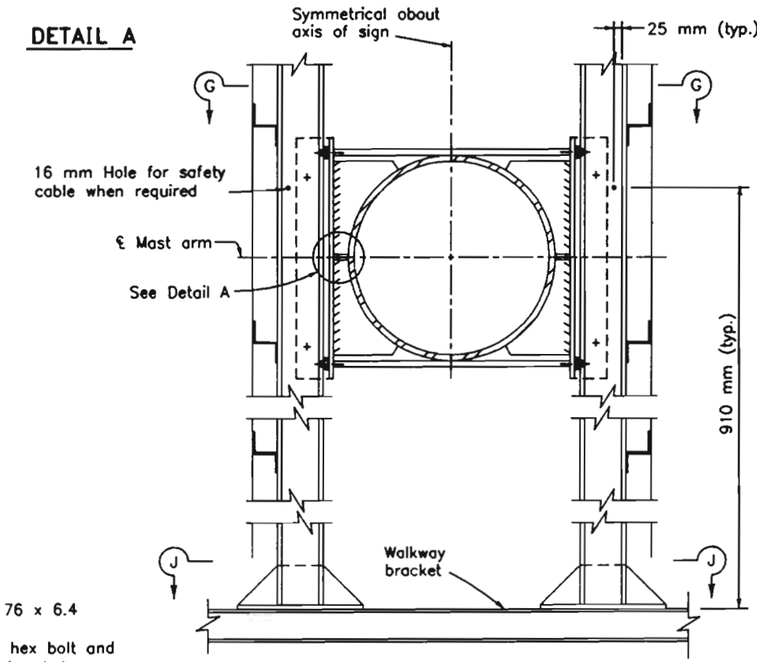

NOTES

For details not shown or noted see "Single Panel". Assembly details shown apply to tongent portion of pipe only. For maunting bracket on elbow see Detail B.

DOUBLE PANEL

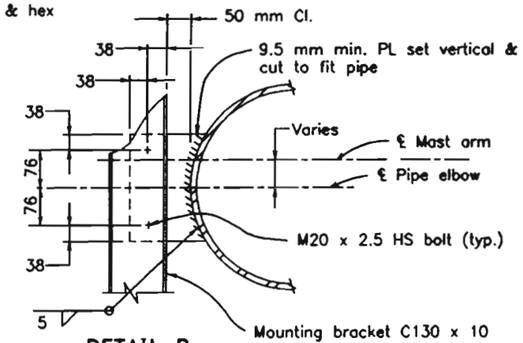

DETAIL B

Mounting bracket on elbow

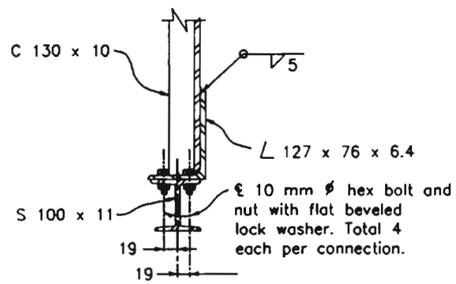

SECTION E-E

Pipe Size NPS in.	Distance (mm)	"X" (mm)	"Y" (mm)
8	(203)	61	324
10	(254)	88	378
12	(305)	113	428
14	(356)	129	460
16	(406)	154	510
18	(457)	180	562
20	(508)	205	612
24	(610)	256	714

MOUNTING BRACKET ASSEMBLY DETAILS

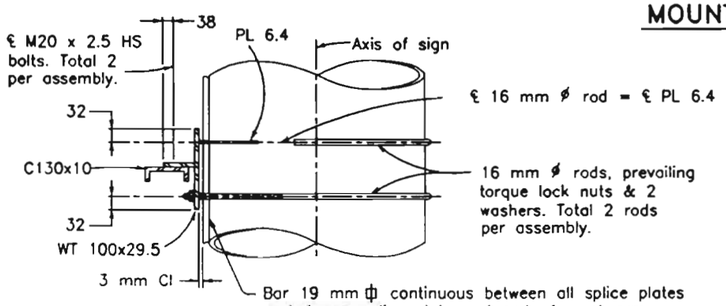

VIEW F-F

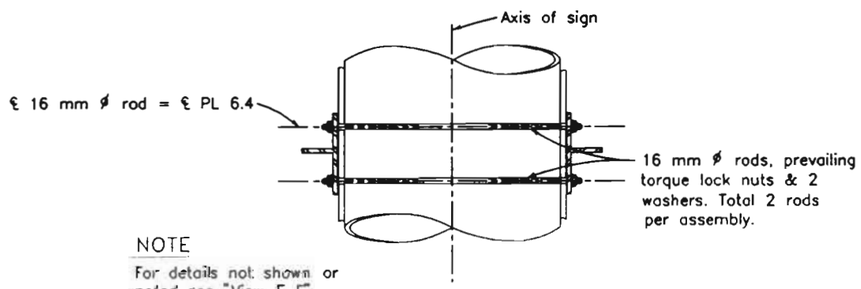

NOTE

For details not shown or noted see "View F-F".

VIEW G-G

NPS = Nominal Pipe Size

ALL DIMENSIONS ARE IN MILLIMETERS UNLESS OTHERWISE SHOWN

COLORADO DEPARTMENT OF TRANSPORTATION

OVERHEAD SIGNS – TUBULAR

STRUCTURAL FRAME DETAILS NO. 1

NO SCALE

ISSUED BY	STANDARD PLAN NO.
STAFF TRAFFIC BRANCH	S-614-50
DATE REVISED	DATE: Jan. 3, 1996
	SHEET 4 OF 9

MS40R

REVISIONS S-614-50

FEDERAL RD REGION NO.	DIVISION	PROJ. NO.	SHEET NO.	TOTAL SHEETS
VIII	COLORADO	CC 4701-082	175	

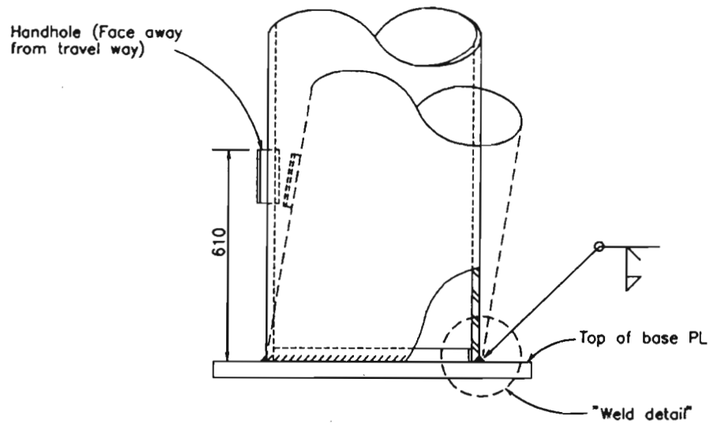

POST BASE ELEVATION

(For base PL details see "Foundation Details" sheet)

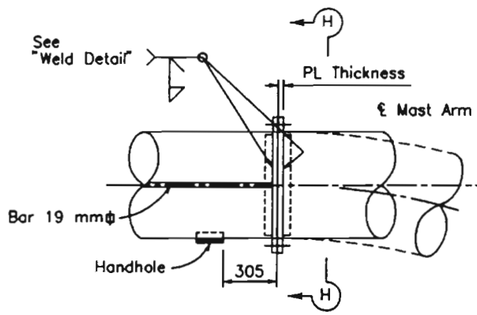

FIELD SPLICE

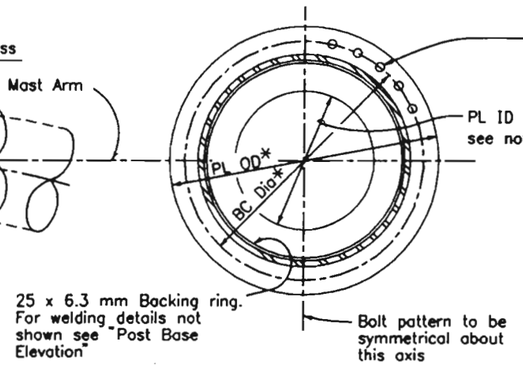

SECTION H-H

Torque to tension of:
100 kn for M16x2
160 kn for M20x2.5
200 kn for M22x2.5

See toble for other details

FIELD SPLICE				
Pipe Diameter (NPS) in. (mm)	PL Thickness mm	HS Bolts	* BC Diameter mm	* PL OD mm
8 (203)	28.6	13-M16x2	280	350
10 (254)	31.8	20-M16x2	340	400
12 (305)	31.8	16-M20x2.5	390	450
14 (356)	31.8	18-M20x2.5	420	480
16 (406)	31.8	20-M20x2.5	470	530
18 (457)	34.9	24-M20x2.5	520	580
20 (508)	34.9	27-M20x2.5	570	640
24 (610)	38.1	26-M22x2.5	690	760

* See note 4

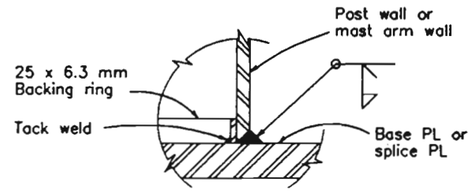

WELD DETAIL

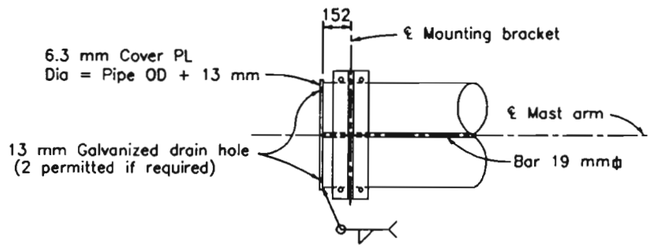

MAST ARM END DETAIL

(For "Single Post Type" only)

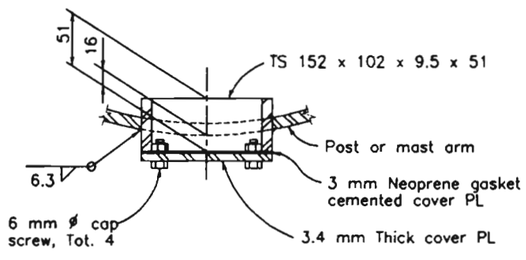

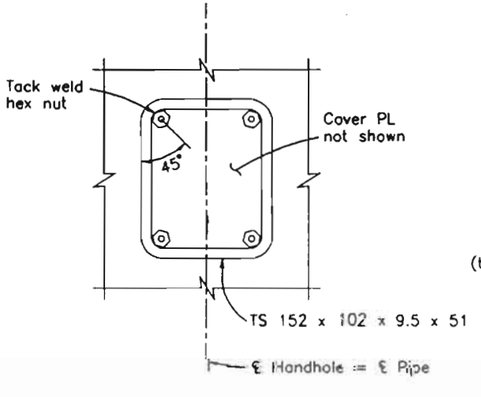

HANDHOLE & COVER DETAILS

Note: Gussets are to be placed ot the base of all tubular posts. See sheet 6 for location of gussets. Gussets are not shown elsewhere in these sheets for clarity.

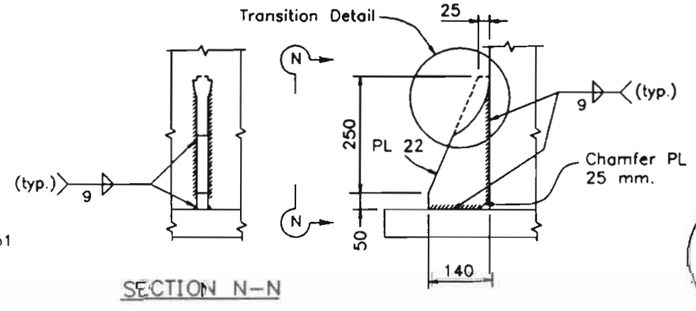

SECTION N-N

GUSSET DETAILS

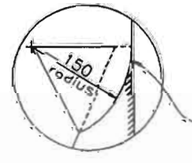

TRANSITION DETAIL

Terminate weld 12 mm short of top of gusset PL. Place weld before cutting radius into gusset PL. Grind weld and gusset PL flush as shown.

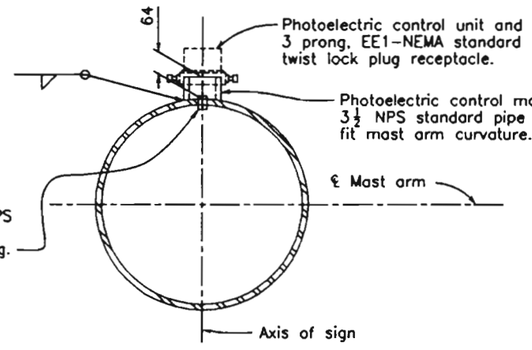

PHOTOELECTRIC CONTROL DETAILS

(See "Layout" sheet for location when required)

NOTE

Design based on capacity of standard pipe.

NOTES

1. Place single thin bead of silicone caulking compound around hole prior to bolting. Caulking not to inerfere with friction between plates in bolted areo.
2. Prime and paint post interior from base PL to 150 mm above lower handhole, unless post is galvanized.
3. "D" is inside diameter of "extra strong pipe".
4. Field splice diameters marked "*" may be increased 50 mm to facilitate bolting.

NPS = Nominal Pipe Size

ALL DIMENSIONS ARE IN MILLIMETERS UNLESS OTHERWISE SHOWN

COLORADO DEPARTMENT OF TRANSPORTATION

OVERHEAD SIGNS - TUBULAR STRUCTURAL FRAME DETAILS NO. 2

NO SCALE

DATE REVISED	ISSUED BY STAFF TRAFFIC BRANCH	STANDARD PLAN NO. S-614-50
MS40S	DATE: Jan. 3, 1996	SHEET 5 OF 9

REVISIONS	S-614-50

FEDERAL RD REGION NO.	DIVISION	PROJ. NO.	SHEET NO.	TOTAL SHEETS
VIII	COLORADO	CC 4701-082	126	

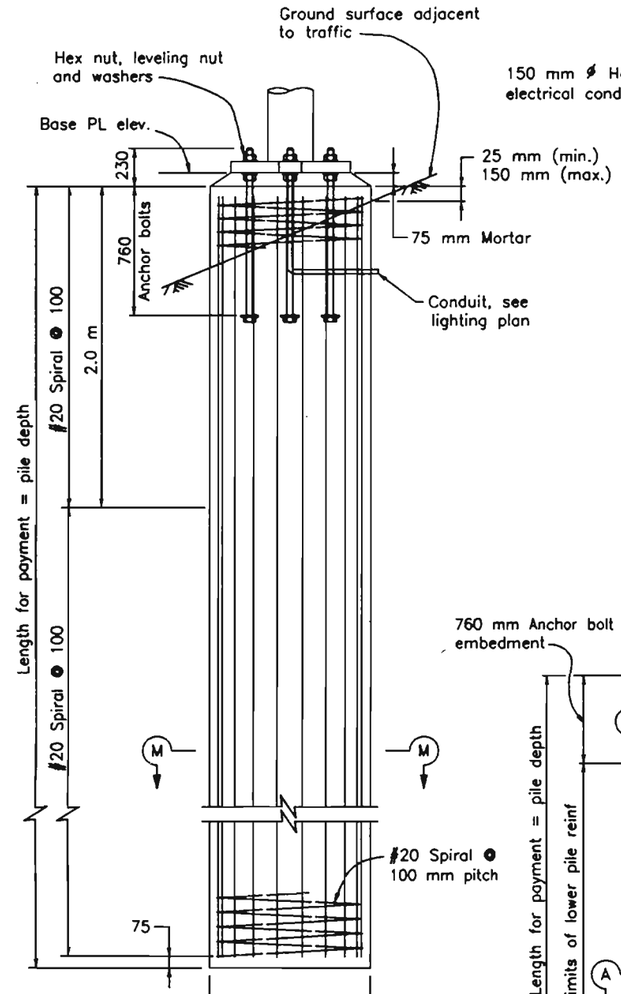

SECTION M-M

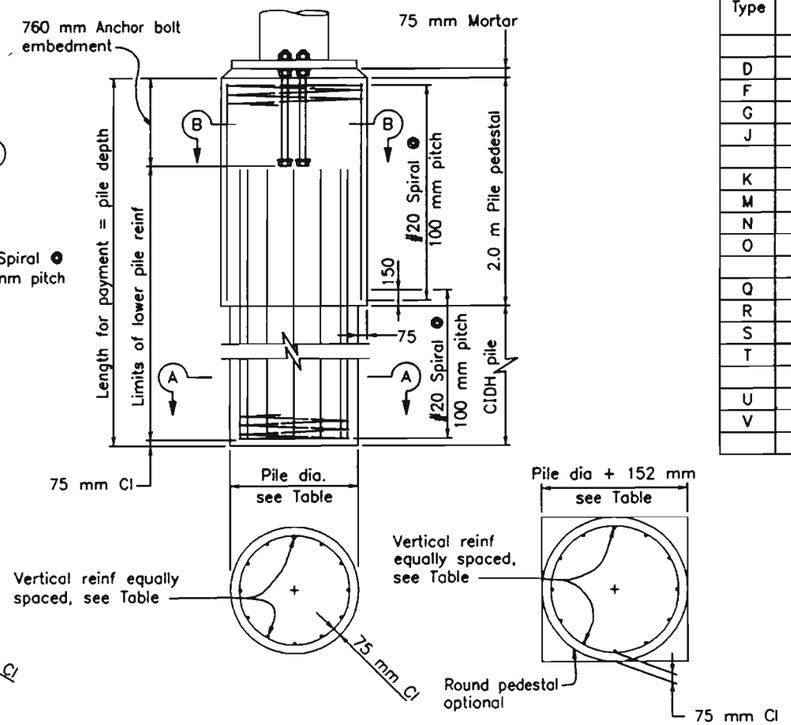

SECTION A-A

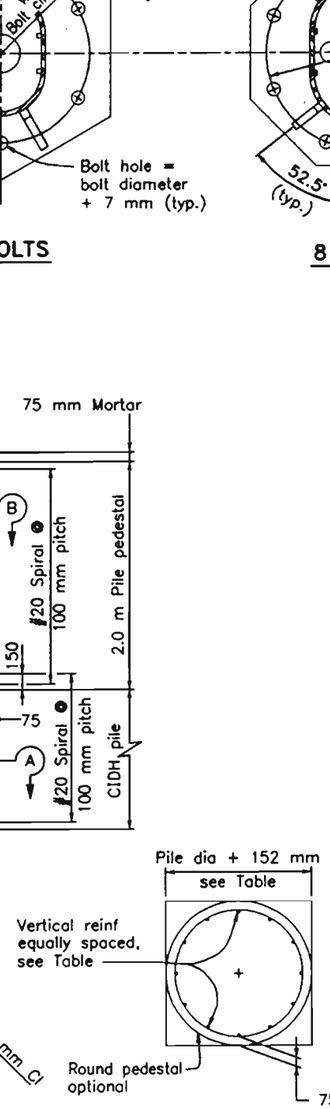

SECTION B-B

CIDH PILE FOUNDATION DETAILS

PEDESTAL / CIDH PILE FOUNDATION DETAILS

(CIDH denotes cast-in-drilled-hole)

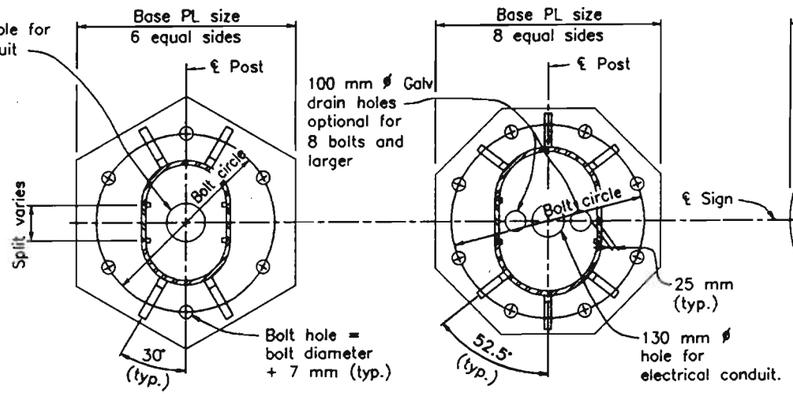

6 BOLTS

8 BOLTS

10 BOLTS

NOTE

See 6 Bolts ar 8 Bolts for details not shawn.

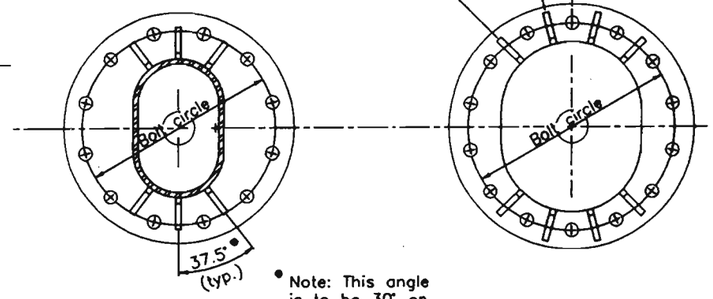

12 BOLTS

• Note: This angle is to be 30° on the 24" ∅ pole.

14 BOLTS

BASE PLATE DETAILS

Past Type	Nominal Pipe Size (NPS) See Note 6 in. (mm)	Split mm	Base PL Size mm	Bolt Circle mm	Anchor Bolts Dia (mm)	Pile * Dia (mm)	Vertical Reinf	Pile Depth meters
D	12 (305) x-s	–	660 x 64	559	6-57	920P	8-#30	3.7
F	12 (305) x-s	150	810 x 70	686	8-57	920P	12-#30	4.0
G	14 (356) x-s	–	690 x 64	584	6-57	920P	8-#30	4.0
J	14 (356) x-s	150	910 Dia x 70	737	10-57	920P	14-#30	5.2
K	16 (406) x-s	–	760 x 64	635	8-57	920P	11-#30	4.3
M	16 (406) x-s	150	1020 Dia x 76	838	12-64	1070P	17-#30	5.2
N	18 (457) x-s	–	810 x 70	686	8-57	920P	12-#30	5.2
O	18 (457) x-s	125	1020 Dia x 76	838	12-64	1070P	17-#30	5.8
Q	20 (508) x-s	–	910 Dia x 70	737	10-57	920P	14-#30	5.8
R	20 (508) x-s	125	1020 Dia x 76	838	12-64	1070P	17-#30	6.7
S	22 (559) x-s	–	1020 Dia x 76	838	12-64	1070P	17-#30	6.7
T	22 (559) x-s	125	1070 Dia x 64	908	14-64	1070P	24-#30	6.7
U	24 (610) x-s	–	1020 Dia x 76	838	12-64	1070P	17-#30	6.7
V	24 (610) x-s	125	1070 Dia x 64	908	14-64	1070P	24-#30	6.7

* NOTE P denotes pedestal. Pile size shown may be increased by 152 mm for the entire length of the pile or be constructed as shown in the pedestal details.

Note: Gussets are not shown elsewhere in these sheets for clarity. All pole bases are to have gussets.

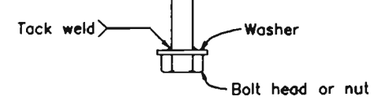

ANCHORAGE DETAIL

NOTES

1. Thread upper 250 mm and galvanize upper 300 mm of the anchor bolts.
2. Pile shall be placed against undisturbed material.
3. Provide bolt template during installation of anchor bolts.
4. Prior to erection of the post, backfill which is equivalent to the surrounding material shall be in place.
5. Pile shall be formed 150 mm minimum below ground surface.
6. Pipe sizes are based on ASTM A53 or A106. NPS = Nominal Pipe Size.

ALL DIMENSIONS ARE IN MILLIMETERS UNLESS OTHERWISE SHOWN

COLORADO DEPARTMENT OF TRANSPORTATION

OVERHEAD SIGNS – TUBULAR FOUNDATION DETAILS

NO SCALE

DATE REVISED	ISSUED BY	STANDARD PLAN NO.
	STAFF TRAFFIC BRANCH	S-614-50
MS40T	DATE: Jan. 14, 1996	SHEET 6 OF 9

REVISIONS

S-614-50

FEDERAL RD REGION NO.	DIVISION	PROJ. NO.	SHEET NO.	TOTAL SHEETS
VIII	COLORADO	CC 4701-082	127	

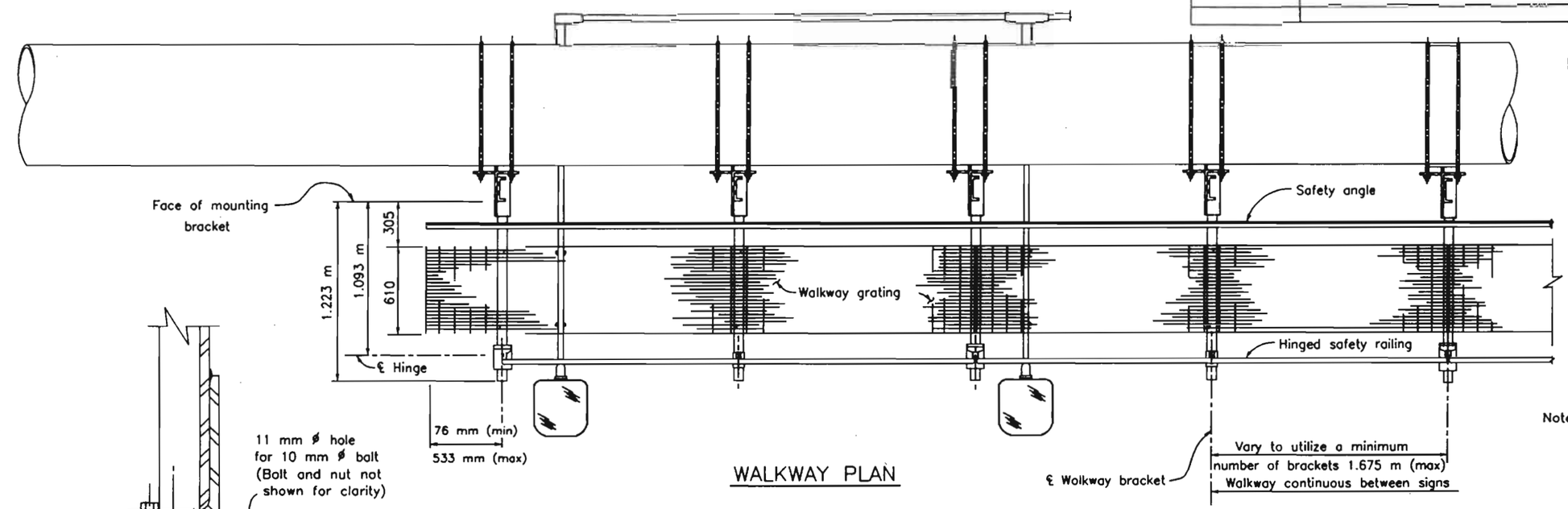

WALKWAY PLAN

Note: Sign panel and zee brackets not shown for clarity.

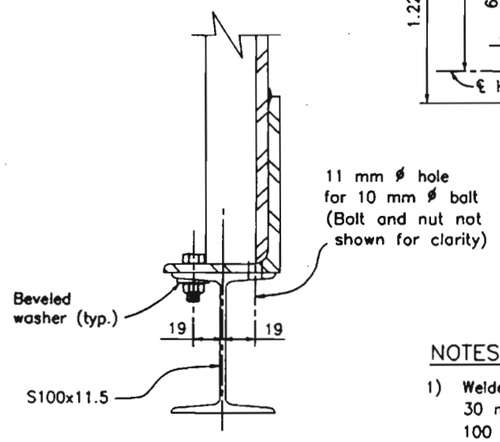

SECTION B-B

NOTES

1) Welded type grating sholl have 32 mm x 3 mm bearing bars at 30 mm centers with 6 mm diameter (or equal) cross bars at 100 mm centers. If mechanical lock grating is used, it shall be equal in strength to the welded type. Alternate hold-down clips may be submitted for approval.

2) Walkway grating to be continuous (no splices) over as many walkway brackets as practical consistent with fabrication, ease of handling and assembly.

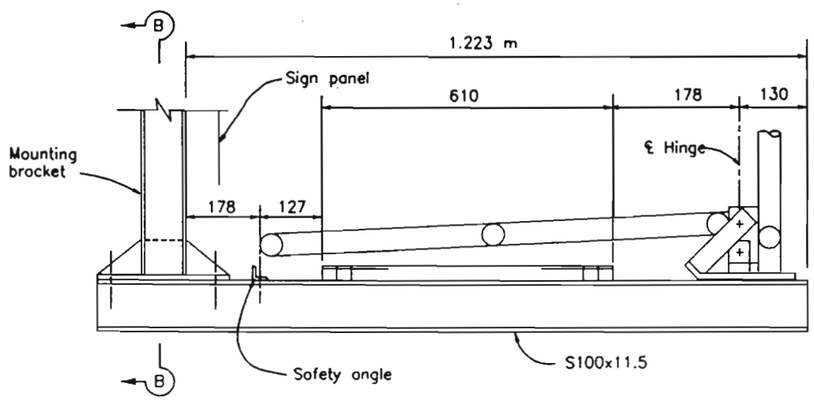

TYPICAL WALKWAY SECTION

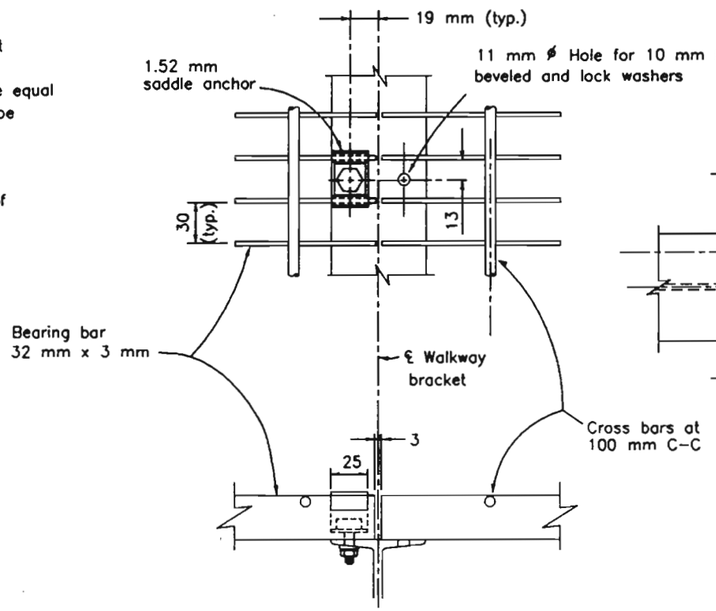

WALKWAY DETAILS

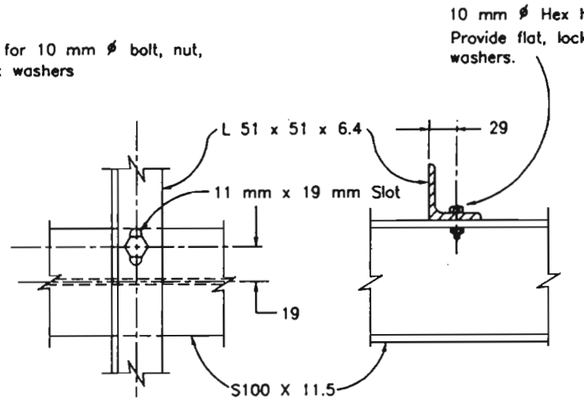

SAFETY ANGLE DETAILS

ALL DIMENSIONS ARE IN MILLIMETERS UNLESS OTHERWISE SHOWN

COLORADO DEPARTMENT OF TRANSPORTATION

OVERHEAD SIGNS
WALKWAY DETAILS

NO SCALE

DATE REVISED	ISSUED BY	STANDARD PLAN NO.
MSS	STATE TRAFFIC BRANCH	S-614-50
	DATE: Jan. 3, 1996	SHEET 7 OF 9

	REVISIONS	S-614-50

FEDERAL RD REGION NO.	DIVISION	PROJ. NO.	SHEET NO.	TOTAL SHEETS
VIII	COLORADO	CC 4701-082	128	

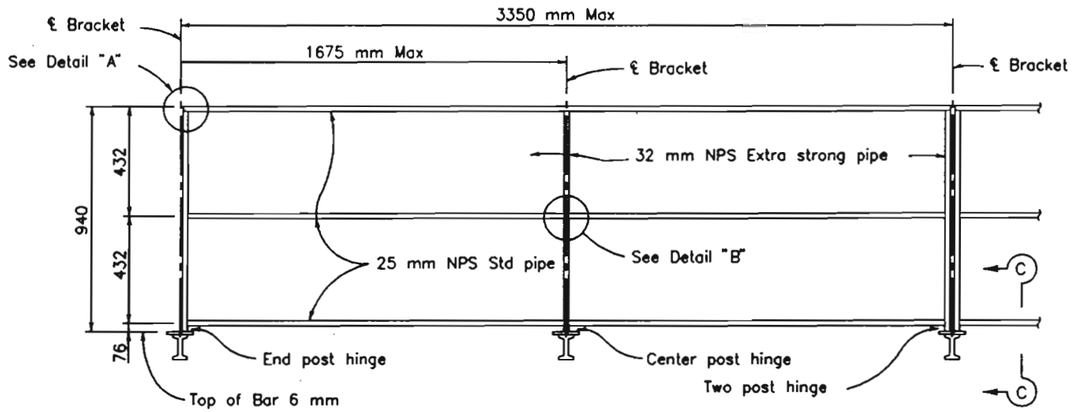

SAFETY RAILING ELEVATION

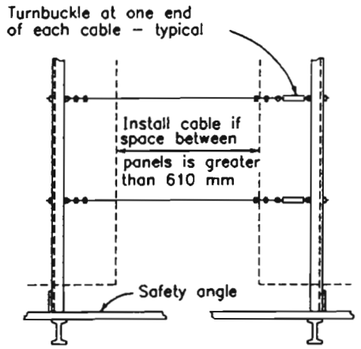

BETWEEN PANELS

SAFETY CABLE ELEVATION

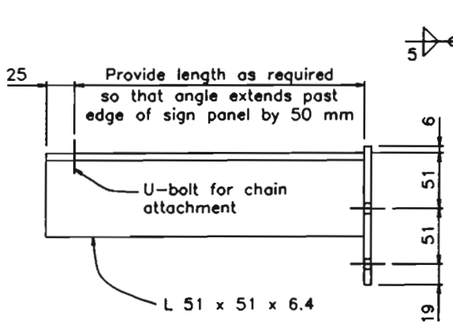

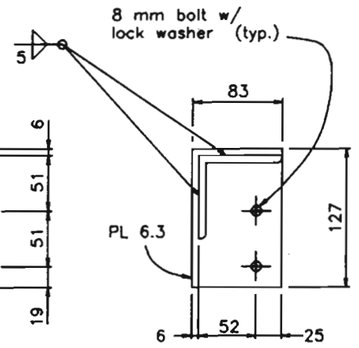

DETAIL C

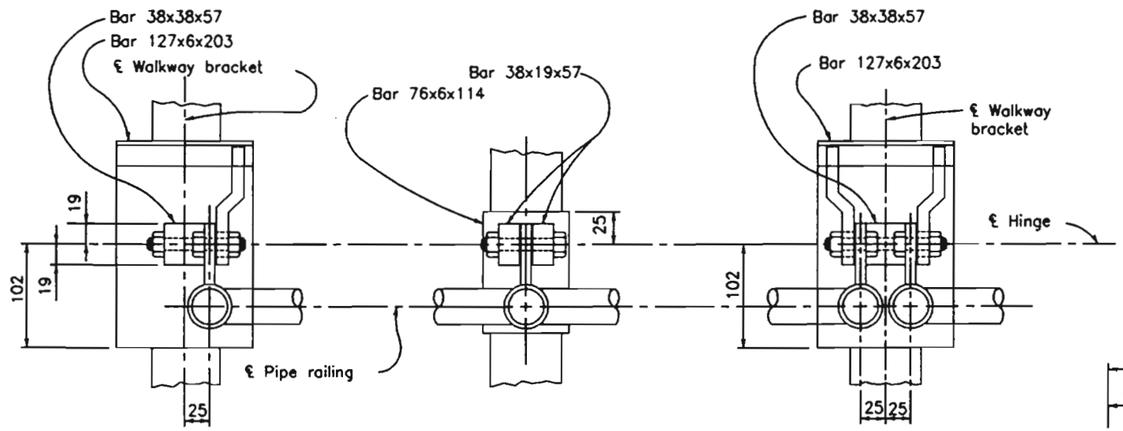

HINGE – PLAN

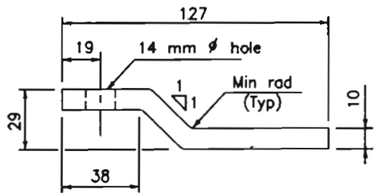

PLAN – KICKER BAR

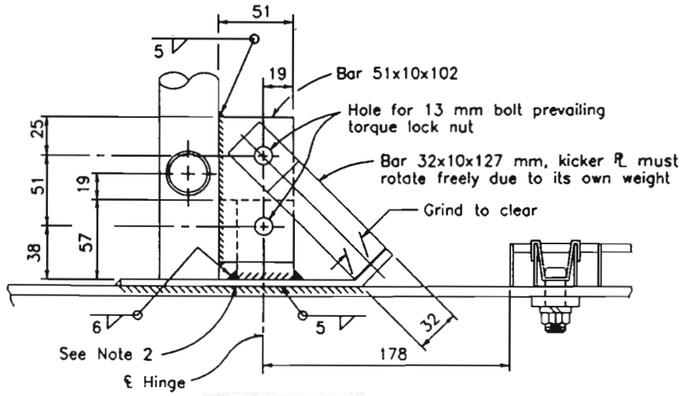

SECTION C-C

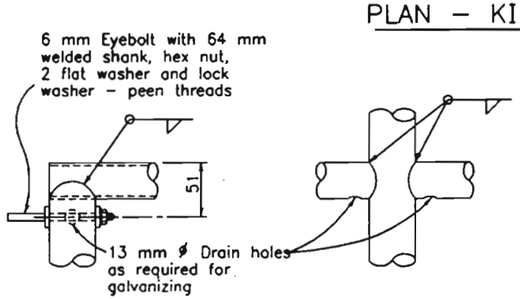

DETAIL A

DETAIL B

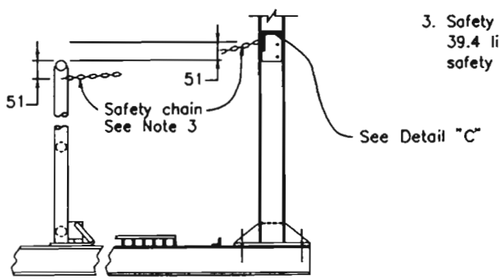

CHAIN ASSEMBLY

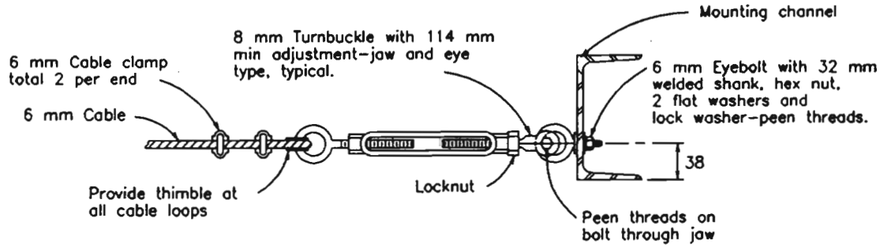

TURNBUCKLE DETAILS

NOTES

1. Special care shall be taken to insure that the complete hinge and latch assembly will hold the safety railing in a steady manner, free of wobble while in the raised position. Maximum allowable displacement from vertical at top of railing when latched shall be 25 mm.
2. Details for bolting hinge bose plate to walkway bracket may be submitted for approval.
3. Safety chain shall be 5 mm galvanized steel coil chain, approximately 39.4 links per meter. Length shall be minimum which allows lock-up of safety railing.

NOTES

Alternative venting methods may be used if approved by the Engineer.

ALL DIMENSIONS ARE IN MILLIMETERS UNLESS OTHERWISE SHOWN

COLORADO DEPARTMENT OF TRANSPORTATION

OVERHEAD SIGNS

WALKWAY SAFETY RAILING DETAILS

NO SCALE

ISSUED BY	STANDARD PLAN NO.
STAFF TRAFFIC BRANCH	S-614-50
DATE: Jan. 14, 1996	SHEET 8 OF 9

MS11 DATE REVISED

REVISIONS	S-614-50	9

FEDERAL RD REGION NO.	DIVISION	PROJ. NO.	SHEET NO.	TOTAL SHEETS
VIII	COLORADO	CC 4701-082	129	

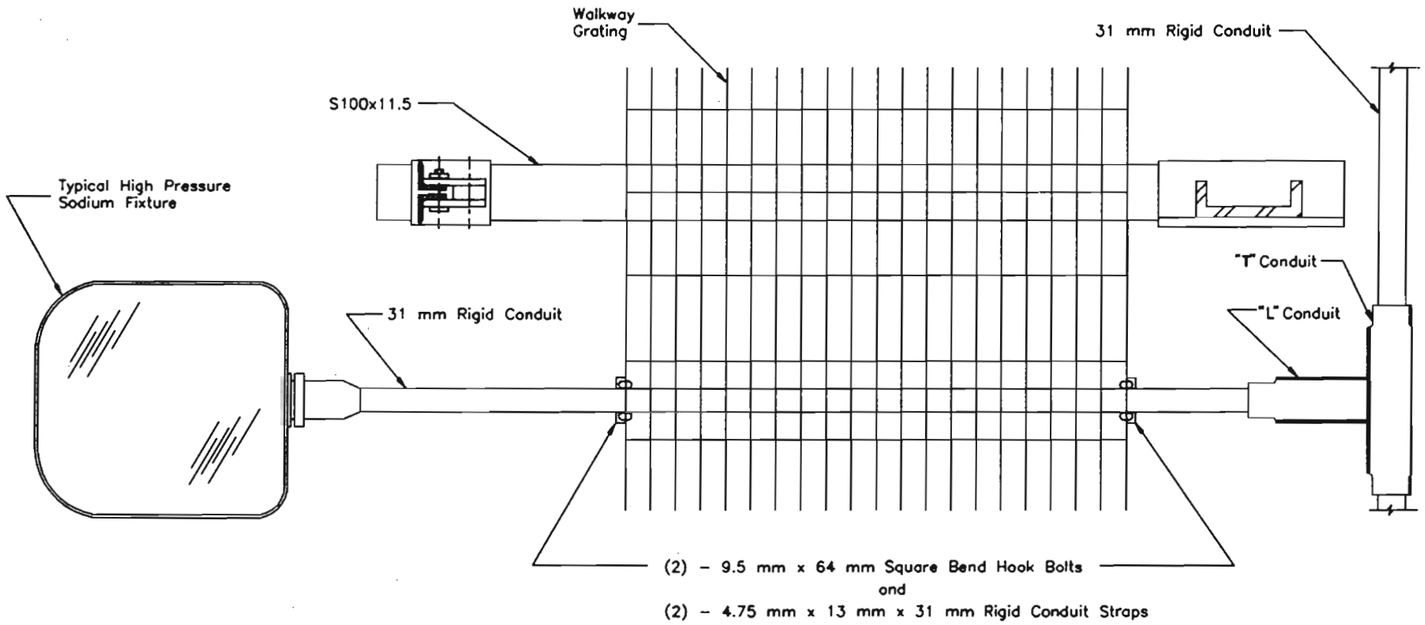

LIGHTING NOTES

1. Fixtures shall be watertight, dustproof and designed for ease of lamp replacement.
2. Lamp shall be of High Pressure Sodium type (250 Watt). Lamps and ballasts shall be designed to operate over on ambient temperature range of -30° C to +50° C.
3. Ballasts shall be of the magnetic regulator type specifically manufactured for use with high pressure sodium lamps, and shall operate at a minimum of 90% power factor. Operation shall be suitable with a line voltage variation of ±10%.
4. The type, number and spacing of fixtures shall be per manufactures specifications to maintain a maximum initial illumination of the sign face of 30 foot candles to 60 foot candles with a maximum uniformity ratio (maximum illumination/minimum illuminaton) of 5:1.
5. Fixture and mounting details will be subject to approval by the Engineer.

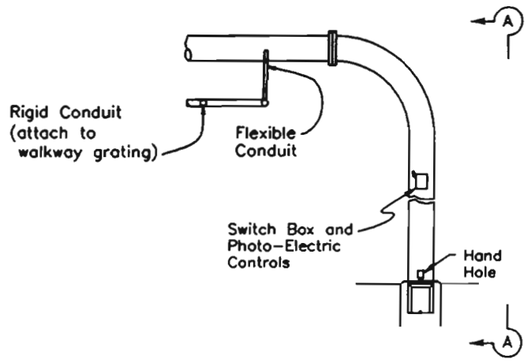

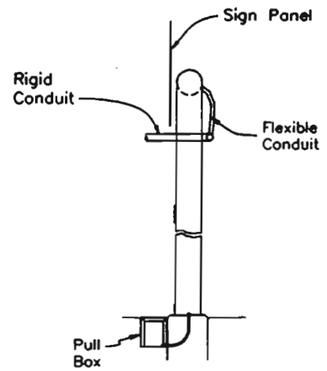

SECTION A-A

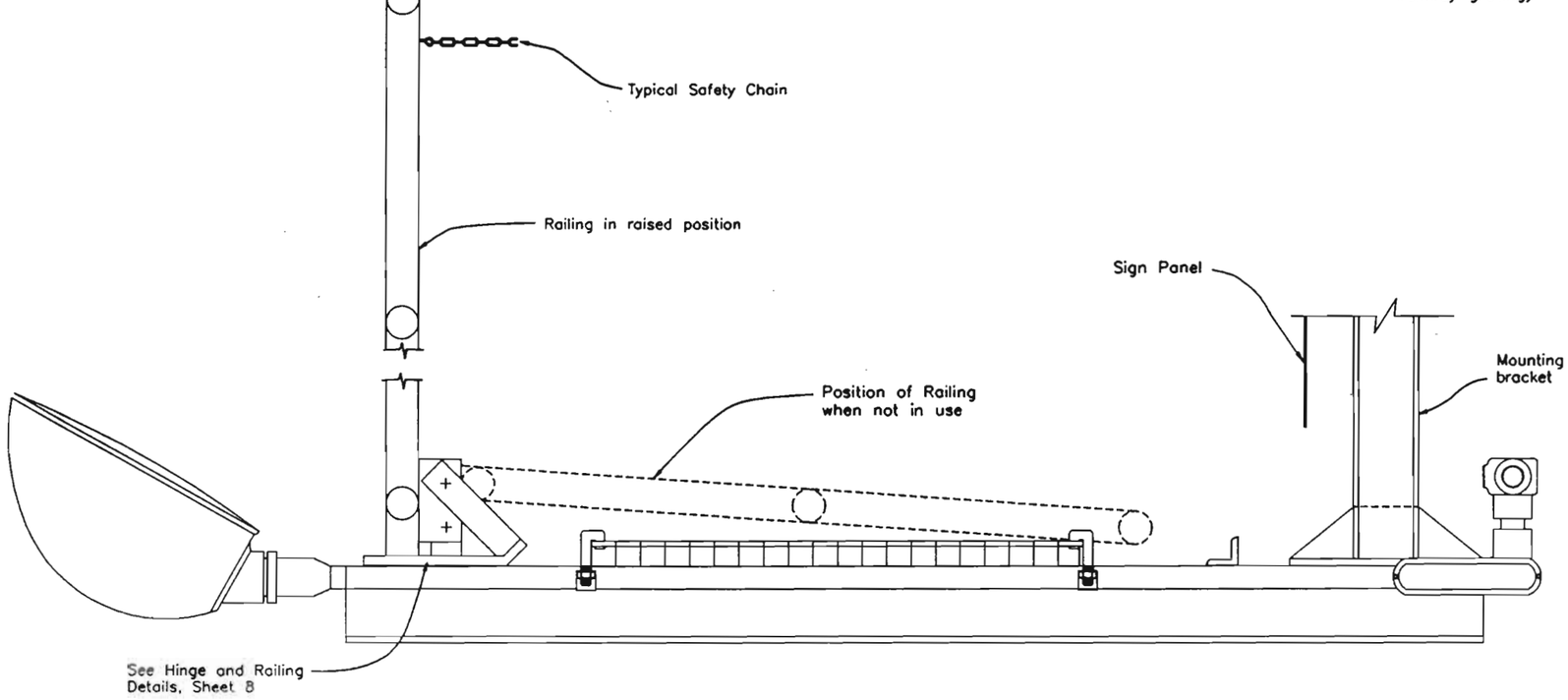

NOTE:

See other pages in this standard for details not shown. All details which are not shown on this sheet have been ommitted for clarity.

COLORADO
DEPARTMENT OF TRANSPORTATION

OVERHEAD SIGNS
LIGHTING DETAILS
NO SCALE

		ISSUED BY STAFF TRAFFIC BRANCH	STANDARD PLAN NO. S-614-50
MLIGHT	DATE REVISED	DATE: Jan. 3, 1996	SHEET 9 OF 9

AS CONSTRUCTED			
NO REVISIONS	REVISED	VOID	

FEDERAL REGION NO.	DIVISION	PROJ. NO.	SHEET NO.	TOTAL SHEETS
VIII	COLORADO	CC 4701-082	130	

REVISIONS		

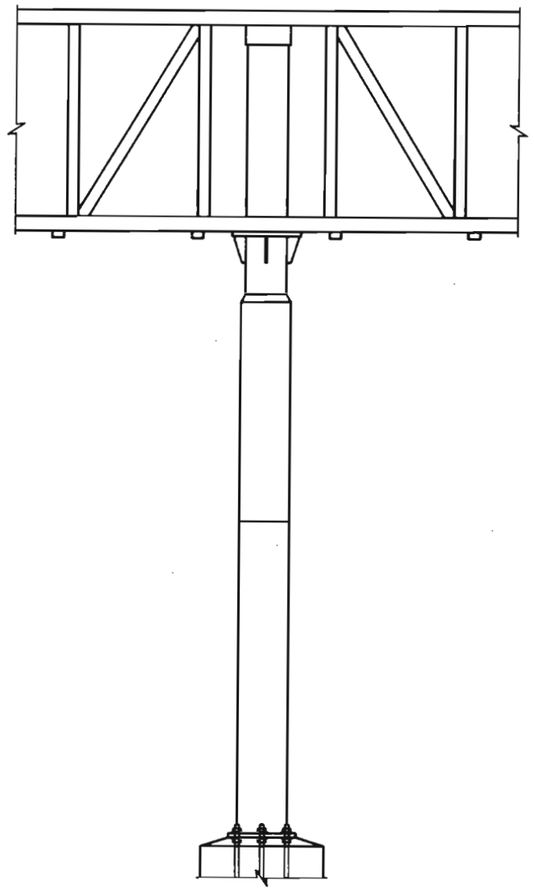

ELEVATION

EXISTING SIGN STRUCTURE TO BE RELOCATED FROM STA 1+212 EBCL TO NEW FOUNDATION AT STA 1+145 EBCL. PROVIDE WITH NEW EB SIGN PANEL AND RESET EXISTING WB PANEL. SEE SIGNING PLAN FOR ADDITIONAL INFORMATION.

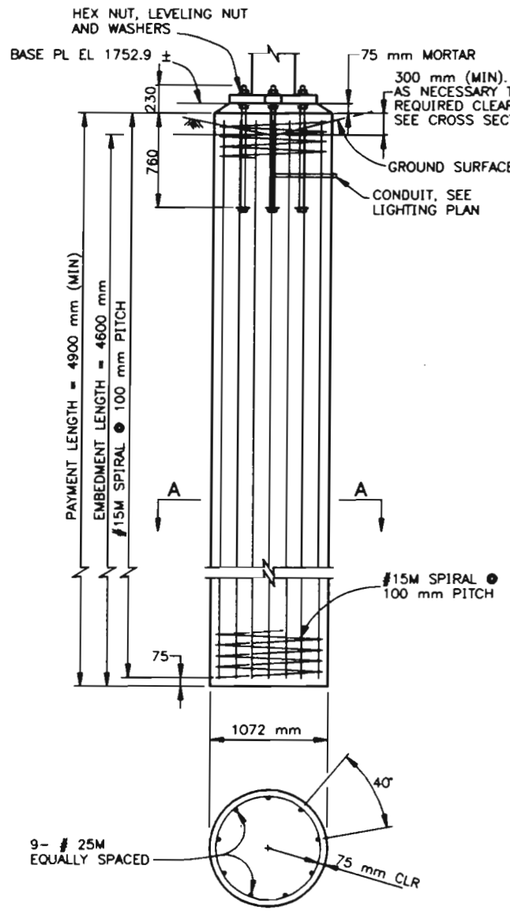

SECTION A–A

CAISSON DETAILS

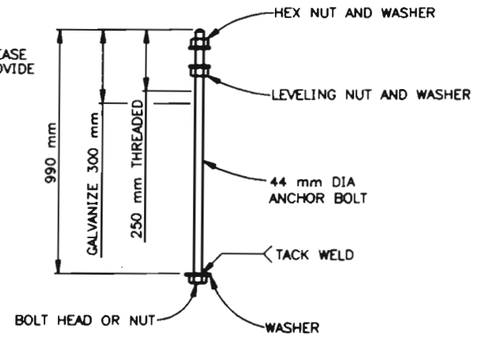

ANCHOR BOLT DETAIL

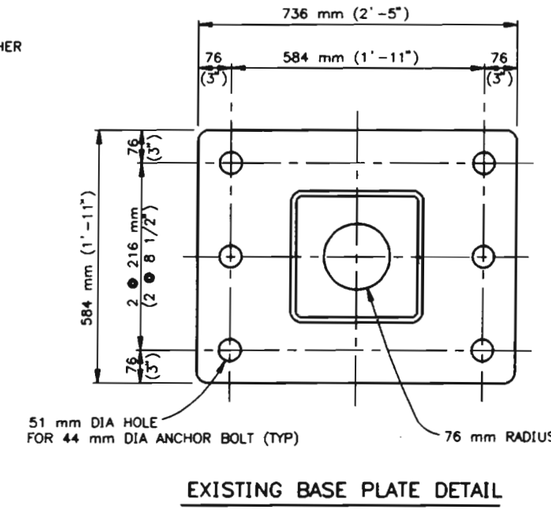

EXISTING BASE PLATE DETAIL

NOTES

ALL WORK SHALL BE DONE IN ACCORDANCE WITH THE STANDARD SPECIFICATIONS APPLICABLE TO THE PROJECT.

CONCRETE FOR CAISSONS SHALL BE CLASS BZ. REINFORCING STEEL; fy=400 MPa

ANCHOR BOLTS SHALL BE MADE FROM STEEL BAR CONFORMING TO AASHTO M314-90 WITH 380 MPa MIN. YIELD STRENGTH AND 517 MPa MIN. TENSILE STRENGTH.

ANCHOR BOLTS SHALL BE HELD IN PLACE USING A STEEL TEMPLATE UNTIL CONCRETE REACHES INITIAL SET.

THIS STRUCTURE SHALL BE GROUNDED IN ACCORDANCE WITH APPLICABLE ELECTRICAL CODES.

DURING SIGN ERECTION THE POST SHALL BE RAKED AS NECESSARY WITH THE USE OF THE LEVELING NUTS TO MAKE THE SIGN PANEL LEVEL.

AT FINAL POSITION OF POST ALL TOP AND BOTTOM ANCHOR BOLTS SHALL BE WRENCH TIGHTENED AGAINST BASE PLATE.

FELSBURG HOLT & ULLEVIG

C-470/YOSEMITE INTERCHANGE

SIGN #61 DETAILS

MAR 96	95-088			X

COMPUTER GENERATED DRAWING DO NOT ALTER MANUALLY

AS CONSTRUCTED			
NO REVISIONS ☐	REVISED ☐	VOID ☐	

FEDERAL RD REGION NO.	DIVISION	PROJ. NO.	SHEET NO.	TOTAL SHEETS
VIII	COLORADO	CC 4701-082	131	

REVISIONS		

University Blvd	1/2
Quebec St	3 1/2
Yosemite St	4 1/2

MODIFY LEGEND (MATCH EXISTING LETTER AND NUMERAL HEIGHTS)

EXISTING BUTTERFLY STRUCTURE

EASTBOUND PANEL – EXISTING STA. 1104+00

(34)

Quebec St	1 1/4
Yosemite St	2 1/4
Junction I-25	3 1/2

MODIFY LEGEND (MATCH EXISTING LETTER AND NUMERAL HEIGHTS)

EXISTING BUTTERFLY STRUCTURE

EASTBOUND PANEL – EXISTING STA. 1224+00

(35)

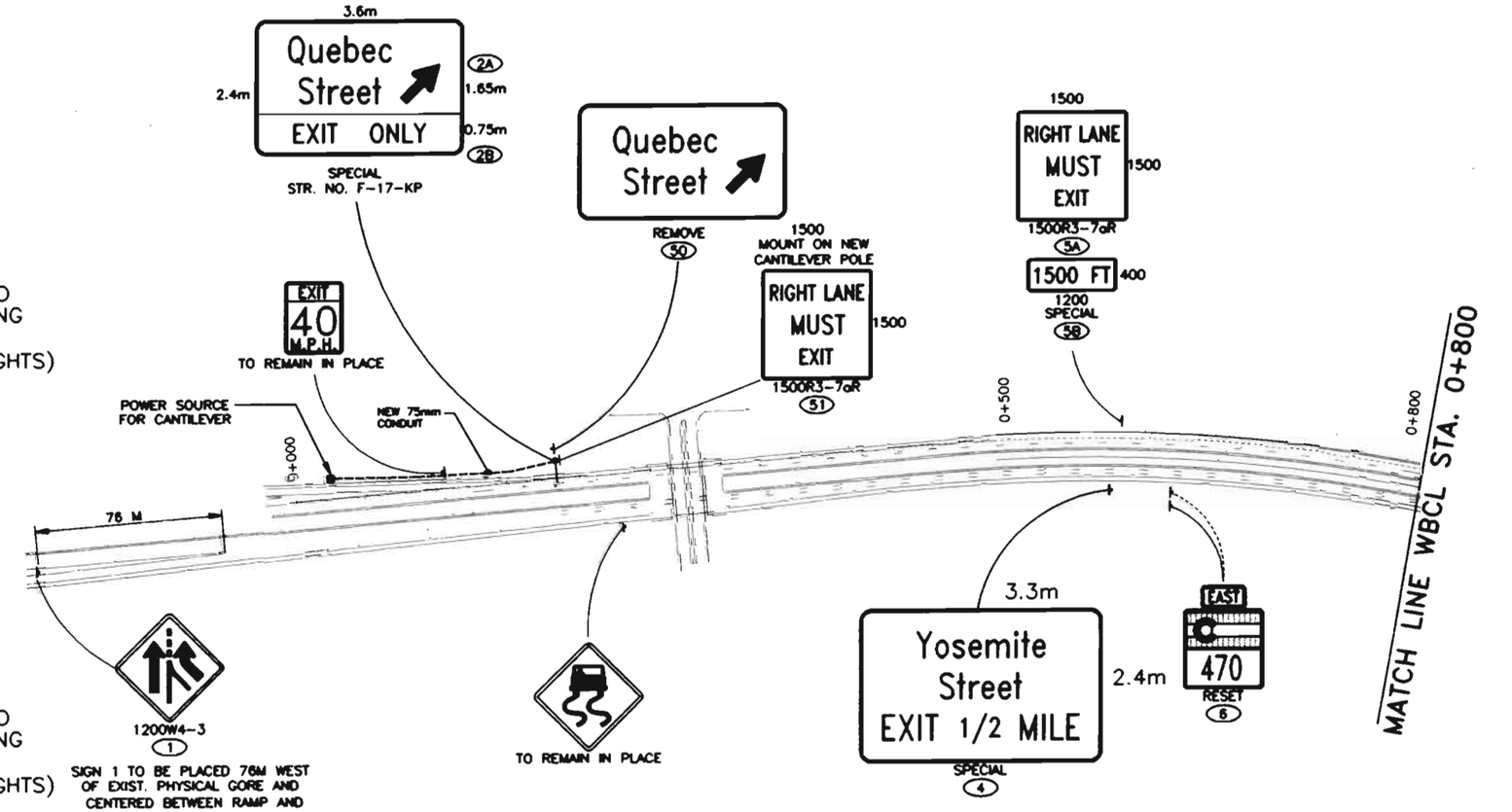

NOTE: WHOLE NUMBERS INDICATE MILLIMETERS
DECIMAL NUMBERS INDICATE METERS.

FELSBURG HOLT & ULLEVIG

C-470/YOSEMITE INTERCHANGE

SIGNING PLAN
C-470 WBCL STA. 0+000 TO STA. 0+800

DATE	PROJECT NO.	DESIGNED BY	SHEET NO.	DRAWING NO.
FEB 96	95-088	DRAWN BY SS CHECKED BY DB	OF SHEETS	SS-5

G:\95088\ACAD\A5088800.dwg, 11, 02/13/96 at 13:56
COMPUTER GENERATED DRAWING DO NOT ALTER MANUALLY

AS CONSTRUCTED			
NO REVISIONS ☐	REVISED ☐	VOID ☐	

FEDERAL RD REGION NO.	DIVISION	PROJ. NO.	SHEET NO.	TOTAL SHEETS
VIII	COLORADO	CC 4701-082	132	

REVISIONS		

REMOVE
Quebec Street EXIT 1/2 MILE
(52)

4.2m
3.0m
Quebec Street EXIT 1/2 MILE
EXIT ⬇ ONLY
(7A) 2.25m
(7B) 0.75m
STR. NO. F-17-K0

MATCH LINE WBCL STA. 0+800

MILE 25 RESET (9)

WEST 470 RESET (11)

NEW 75mm CONDUIT

POWER SOURCE FOR CANTILEVER

NEW 75 mm CONDUIT

BUCKLE UP IT'S THE LAW RESET (13)

REMOVE * (15)

1+000

1+500

1200 W4-1R (16)

SPEED LIMIT 55 TO REMAIN IN PLACE

1+800

1+878.735

RIGHT LANE ENDS
1500 FT
REMOVE
(SIGN REMOVAL TO COINCIDE WITH FINAL STRIPING)
(21)

SPEED LIMIT 55 RESET (8)

25 Denver Colo Spgs Exit 1 Mile
LAST EXIT BEFORE TOLLWAY
REMOVE (38)

MILE 25 RESET (10)

EXIT 45 M.P.H.
1200W13-2(45)
(14)

4.5m
Yosemite Street ⬈
1.8m
SPECIAL (12)

900W3-3 (18)

4.2m
25 Denver Colo Spgs Exit 1 Mile
LAST EXIT BEFORE TOLLWAY
4.2m
SPECIAL (3A) 3.25m
SPECIAL (38) 0.95m
STR. NO. F-17-KN

6.0m
2.1m

Yosemite St.	1/4	NEW EB PANEL
Junction I-25	3/4	
E-470 TOLLWAY	3/4	
Quebec St	3/4	RESET WB PANEL
University Blvd	3 3/4	
Broadway	5 1/4	

(61)
SIGN STRUCTURE F-17-JE
RESET BUTTERFLY STRUCTURE ONTO NEW CAISSON FOUNDATION. (SEE SHEET 130)

1.5m
EXIT ⬈
1.5m
SPECIAL (17)

1.5m
YOSEMITE STREET ⟷
1.2m
SPECIAL (19A)

WRONG WAY 900R5-1a (19B)

WRONG WAY 900R5-1a (20)

25 Denver Colo Spgs Exit 1/2 Mile
USE RIGHT LANE
TO REMAIN IN PLACE

120M-3L (53) TO (56)

120M-3R (57) TO (60)

Original Scale 1:2000

NOTE: OM-3L & OM-3R TO BE PLACED ON U-3 POST AT 2M SPACING DRIVEN THROUGH EXISTING PAVEMENT.

NOTE: WHOLE NUMBERS INDICATE MILLIMETERS
DECIMAL NUMBERS INDICATE METERS.

FELSBURG HOLT & ULLEVIG

C-470/YOSEMITE INTERCHANGE

SIGNING PLAN
C-470 WBCL STA. 0+800 TO STA. 1+878.735

DATE	PROJECT NO	DESIGNED BY JF	SHEET NO 2	DRAWING NO
FEB 96	95-088	DRAWN BY SS	OF 3 SHEETS	SS-6
		CHECKED BY DB		

© 1990 BY AASHTO, INC. (T), ITE, AND FHWA (US)
COMPUTER GENERATED DRAWING DO NOT ALTER MANUALLY

AS CONSTRUCTED					
NO REVISIONS ☐	REVISED ☐	VOID ☐			

FEDERAL RD REGION NO.	DIVISION	PROJ. NO.	SHEET NO.	TOTAL SHEETS
VIII	COLORADO	CC 4701-082	136	

REVISIONS		

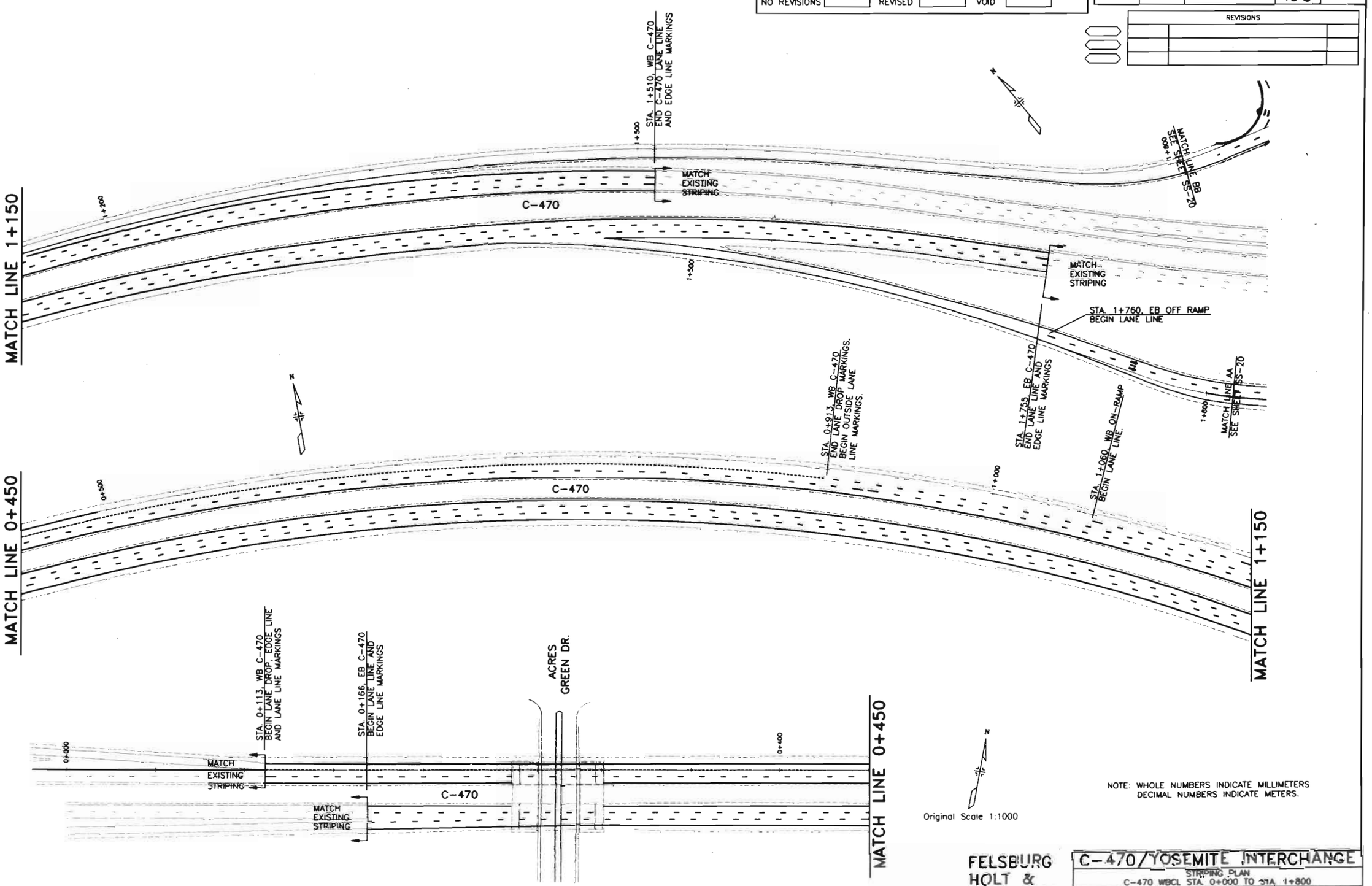

NOTE: WHOLE NUMBERS INDICATE MILLIMETERS
DECIMAL NUMBERS INDICATE METERS.

FELSBURG HOLT & ULLEVIG

C-470/YOSEMITE INTERCHANGE

STRIPING PLAN
C-470 WBCL STA. 0+000 TO STA. 1+800

DATE	PROJECT NO.	DESIGNED BY	DRAWN BY	CHECKED BY	SHEET NO.	OF SHEETS	DRAWING NO.
FEB 96	95-088	RF	SS	DB	1	2	SS-19

COMPUTER GENERATED DRAWING DO NOT ALTER MANUALLY

AS CONSTRUCTED

NO REVISIONS ☐ REVISED ☐ VOID ☐

FEDERAL RD REGION NO.	DIVISION	PROJ. NO.	SHEET NO.	TOTAL SHEETS
VIII	COLORADO	CC 4701-082	137	

REVISIONS		

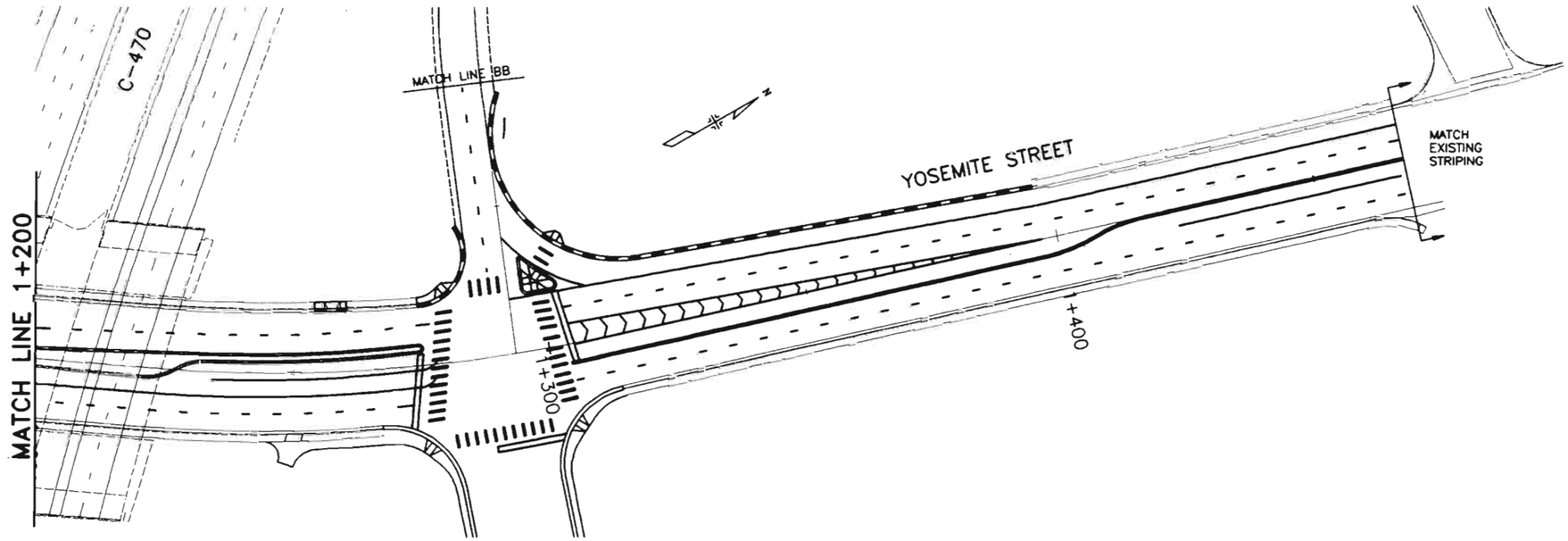

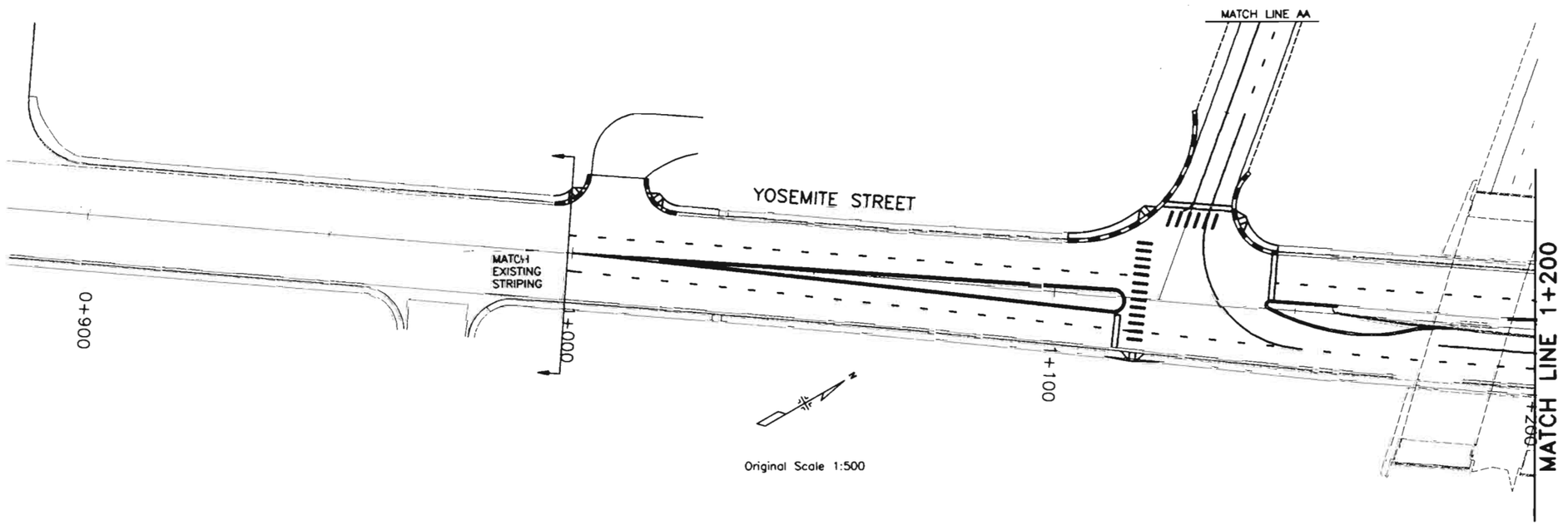

Original Scale 1:500

NOTE: WHOLE NUMBERS INDICATE MILLIMETERS
DECIMAL NUMBERS INDICATE METERS.

FELSBURG HOLT & ULLEVIG

C-470/YOSEMITE INTERCHANGE

STRIPING PLAN
YOSEMITE ST. STA. 1+000 TO STA. 1+456.699

DATE	PROJECT NO	DESIGNED BY	DRAWN BY	CHECKED BY	SHEET NO.	OF SHEETS	DRAWING NO.
JAN 96	95-088	JF	SS	DB	2	2	SS-20

G:\95088\ACAD\A5088622.dwg, 11, 01/15/96 at 09:12

COMPUTER GENERATED DRAWING DO NOT ALTER MANUALLY

AS CONSTRUCTED			
NO REVISIONS ☐	REVISED ☐	VOID ☐	

FEDERAL RD REGION NO.	DIVISION	PROJ. NO.	SHEET NO.	TOTAL SHEETS
VIII	COLORADO	CC 4701-082	138	

REVISIONS		

NOTES

1. Except as modified in the plans, all work shall be in accordance with "Standard Specifications for Road and Bridge Construction", 1991 and "Standards Plans", November 1992, by the Colorado Department of Transportation (CDOT).
2. Conduit, pole, detector and controller cabinet locations are approximate. Exact location shall be determined by the Engineer in the field. Traffic signal poles and mast arms shall not be installed until exact location of pole bases is field verified. Douglas County is responsible for ordering signal poles and mast arms. The Contractor shall pick up signal poles and mast arms from Douglas County at 3030 North Industrial Way, Castle Rock, Co. Contractor to contact Douglas County (Carlos Zambrano, 660-7475) a minimum of 48 hours and a maximum of 96 hours prior to starting traffic signal construction.
3. All existing utility locations are approximate. The Contractor shall field verify the exact location of all existing utilities before commencing work and agrees to be fully respansible for any and all damages which may occur by the Contractor's failure to exactly locate and preserve any and all underground utilities.
4. Payment shall be made only for items in the pay item list. All other items shall be considered incidental to the work.
5. All signal heads shall be polycarbonate type and black in color. Traffic signal poles shall be black in color.
6. The Contractor shall submit a traffic control plan for construction to the Engineer with the permit application. A public way work permit will not be issued without an approved traffic control plan for traffic control during construction.
7. The controller cabinet shall be installed such that with the front door open a technician views both the controller and the intersection.
8. The controller shall be a Type 170 and the controller cabinet shall be a Model 336S.
9. Mast arm signal heads shall be mounted approximately level with one another, with a 5.2 to 5.8 meter clearance above pavement grade at its highest elevation. All traffic signal vehicle heads shall be centered over the approach through and left turn lanes.
10. The contractor shall provide the Engineer with at least four (4) sets of equipment specifications/descriptions and obtain approvals before ordering the equipment.
11. Upon completion of the work, the Contractor shall submit record drawings, corrected plans and any additional data required by the Engineer showing in detail all construction changes.
12. An electrical permit and subsequent inspection by Douglas County is required before Public Service Company of Colorado will execute power to the intersection. Public Service contact: Cheri Weers at 571-2505.
13. All pull boxes shall be constructed of fiberglass reinforced polymer concrete.
14. Existing curb and gutter, and sidewalk shall not be disturbed during placement of conduit. Conduit under these areas shall be placed by moling, boring or hand digging. Trenching is allowed only in dirt or grass areas, and in Yosemite St. because of Asphalt Overlay as part of this project. The Contractor is fully responsible for any and all damages to existing curb and gutter, and sidewalk resulting from moling, boring or hand digging of conduit.
15. 75mm conduit shall carry 120 volt load wiring only. 50mm conduits shall carry detector, luminaire and interconnect wiring in seporote conduits unless specified otherwise.
16. Contractor shall provide pedestrian push buttons and R10-4b signs incidental to the Traffic Signal Controller (Type 170) pay item. The following is an estimate of the required number of pedestrian push buttons and signs for this project.

INTERSECTION	PUSH BUTTONS/SIGNS
Yosemite Street/ C-470 EB Off Ramp	4
Yosemite Street/ C-470 WB On Ramp	8

17. Traffic signal pole foundations shall be constructed per CDOT'S latest M & S Standards. The Contractor shall field verify soil conditions at the project site to assure that all foundation designs are adequate. The Contractor shall have the foundation design for the double mast arm pole verified by a licensed structural engineer in the State of Colorado. The Contractor shall be fully responsible to verify the adequacy of all pole foundations and shall hold CDOT and Douglas County harmless for foundation failures resulting from inadequate design or improper foundation construction. The design for the double mast arm foundation shall be submitted to the Engineer and Douglas County for review.
18. Contractor shall instoll a utility meter housing per Public Service Company of Colorado Standards at the power source locations. All electrical service used for the operation of the traffic signal shall be wired to this installation.

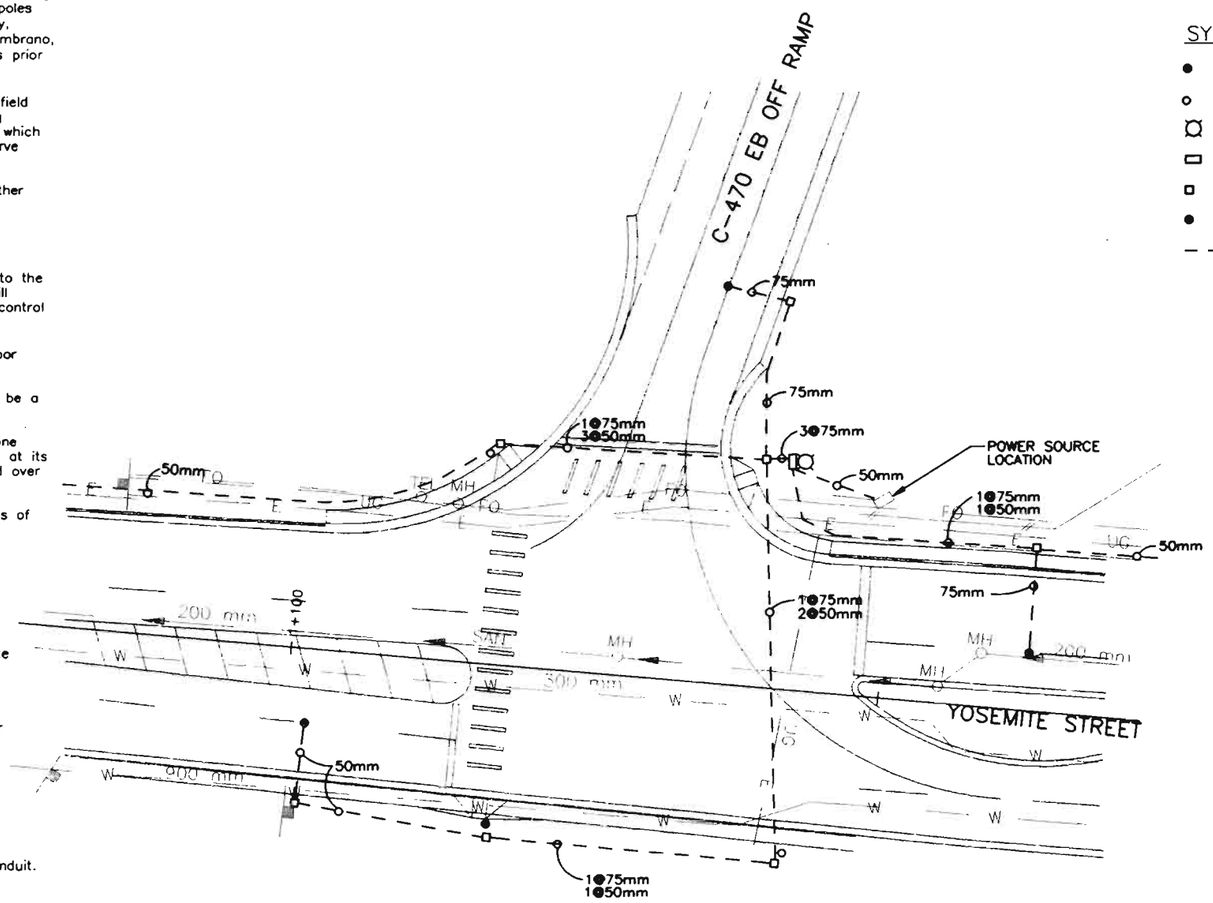

Original Scale 1:250

LEGEND

SYMBOL	ITEM
●	TRAFFIC SIGNAL PEDESTAL POLE
○	TRAFFIC SIGNAL POLE W/ MAST ARM
☒	TRAFFIC SIGNAL CONTROLLER AND CABINET
▭	PULL BOX - TYPE I (800x400)
▫	PULL BOX - TYPE II (400x250)
●	PULL BOX - SPECIAL
- - - - -	CONDUIT - PVC SCHEDULE 80

FIBERGLASS FOUNDATION DETAIL

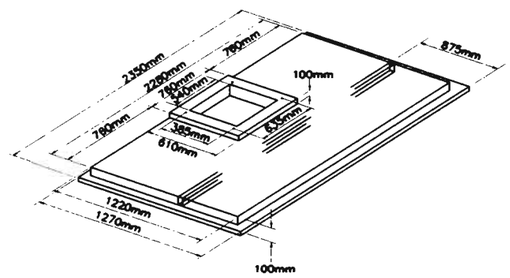

DOUGLAS COUNTY STANDARD SIGNAL DETAILS
CHECK-OFF, FOR USE ON THIS PROJECT
SEE TS-5 THROUGH TS-11

- ☐ 1- MAST ARM & POLE
- ☒ 2- MAST ARM POLE FOOTINGS
- ☐ 3- SPAN WIRE POLE
- ☒ 4- PEDESTRIAN PUSH BUTTON POLE PEDESTAL POLE
- ☐ 5- CONTROLLER CABINET INSTALLATION
- ☒ 6- SIGNAL HEADS & MOUNTING GENERAL WIRING NOTES
- ☐ 7- PERMANENT (PRECAST) PULL BOX TEMPORARY (PLASTIC) PULL BOX
- ☒ 8- PULL BOX (SPECIAL) LOOP DETECTOR LEAD-IN
- ☒ 9- DETECTORS CONDUIT INSTALLATIONS
- ☒ 10- UNDERGROUND POWER SCHEMATIC-SIGNALS GROUND TRENCHING
- ☒ 11- UNDERGROUND POWER FEED OVERHEAD POWER FEED
- ☐ 12- SCHOOL FLASHING BEACONS- SIDE OF ROAD
- ☐ 13- SCHOOL FLASHING BEACON-OVERHEAD
- ☐ 14- WARNING/REGULATORY FLASHING BEACON TYPICAL CROSSWALK MARKING
- ☐ 15- ILLUMINATED STREET NAME SIGN
- ☐ 16- BLANK-OUT REGULATORY/WARNING SIGN

NOTE: WHOLE NUMBERS INDICATE MILLIMETERS
DECIMAL NUMBERS INDICATE METERS.

FELSBURG HOLT & ULLEVIG

C-470/YOSEMITE INTERCHANGE

TRAFFIC SIGNAL PLAN
YOSEMITE ST. STA. 0+00 TO STA. 3+00

DATE	PROJECT NO.	DESIGNED BY JGF	SHEET NO. 1	DRAWING NO.
FEB 96	95-088	DRAWN BY SS	OF 5 SHEETS	TS-1
		CHECKED BY RRF		

S:\95088\CAD\ACAD\SHEET.DWG, 1:1, 02/19/96 09:01:53.00
COMPUTER GENERATED DRAWING. DO NOT ALTER MANUALLY

AS CONSTRUCTED			
NO REVISIONS ☐	REVISED ☐	VOID ☐	

FEDERAL RD REGION NO.	DIVISION	PROJ. NO.	SHEET NO.	TOTAL SHEETS
VIII	COLORADO	CC 4701-082	139	

REVISIONS		

SUMMARY OF TRAFFIC SIGNAL APPROXIMATE QUANTITIES –
INTERCONNECT QUANTITIES BETWEEN INTERSECTIONS SHOWN ON SI-1

ITEM NO.	DESCRIPTION	UNIT	QUANT.
613	50mm ELECTRICAL CONDUIT (PLASTIC)	m	185
613	50mm ELECTRICAL CONDUIT (PLASTIC)(INSTALL ONLY)	m	65
613	75mm ELECTRICAL CONDUIT (PLASTIC)	m	170
613	LUMINAIRE HIGH PRESSURE SODIUM (250 WATT)	EACH	2
614	PEDESTRIAN SIGNAL FACE (400)	EACH	4
614	TRAFFIC SIGNAL FACE (300-300-300)	EACH	11
614	FIRE PREEMPTION UNIT AND TIMER	EACH	1
614	LOOP DETECTOR WIRE	m	210
614	TRAFFIC SIGNAL VEHICLE DETECTOR AMPLIFIER (LOOP TYPE)	EACH	2
	(4 CHANNEL)		
614	TRAFFIC SIGNAL VEHICLE DETECTOR (MICRO TYPE)	EACH	6
614	TRAFFIC SIGNAL-LIGHT POLE STEEL (1 MAST ARM)(INSTALL ONLY)	EACH	1
614	TRAFFIC SIGNAL-LIGHT POLE STEEL (2 MAST ARMS)(INSTALL ONLY)	EACH	1
614	TRAFFIC SIGNAL PEDESTAL POLE STEEL (INSTALL ONLY)	EACH	2
614	TRAFFIC SIGNAL CONTROLLER (TYPE 170)	EACH	1

2015PM PEAK HOUR TRAFFIC FORECAST

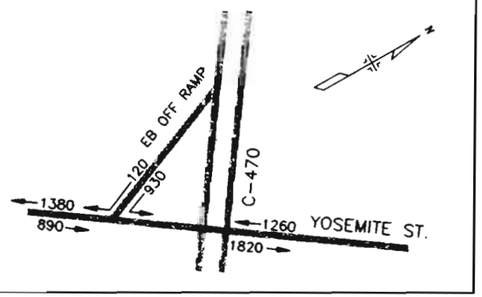

SIGNAL PHASING

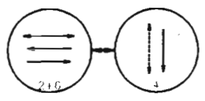

KEY
- PHASE MOVEMENT
- PERMISSIVE LEFT TURN
- PEDESTRIAN MOVEMENT

Original Scale 1:250

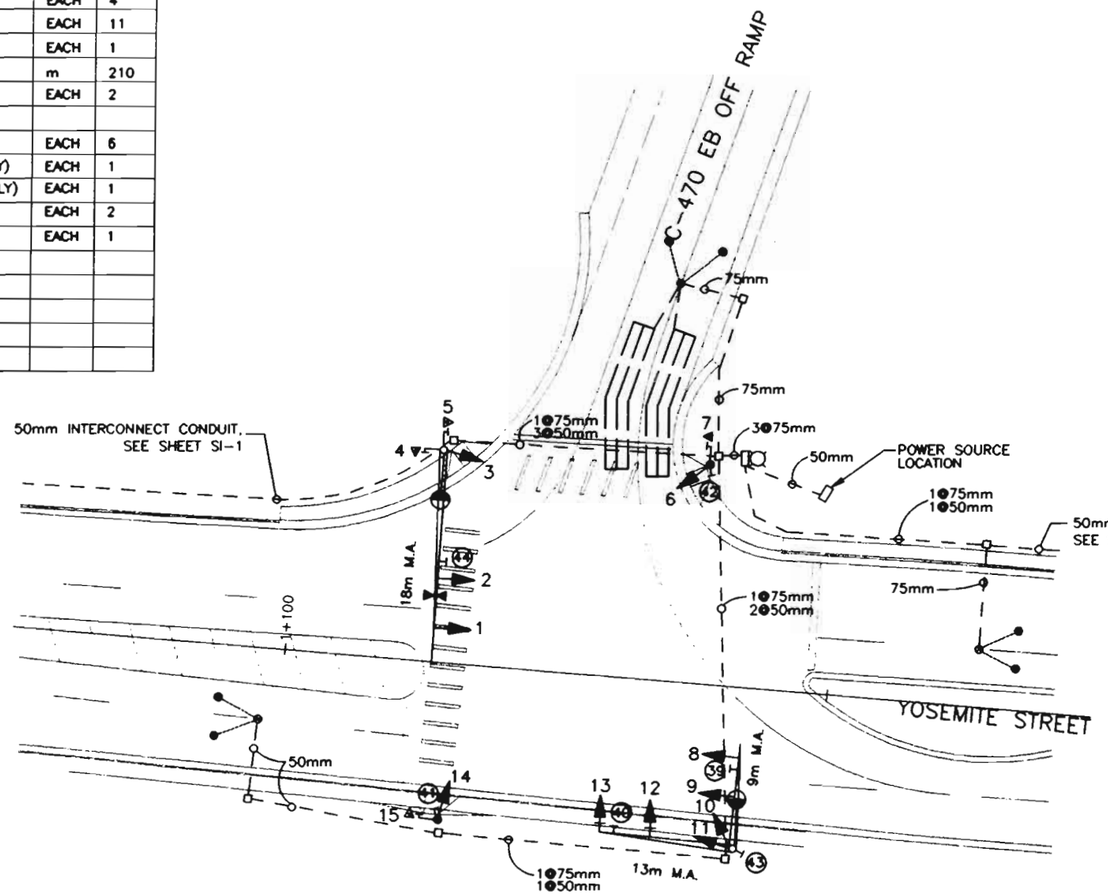

LEGEND

SYMBOL	ITEM
●	TRAFFIC SIGNAL PEDESTAL POLE
	TRAFFIC SIGNAL POLE W/ MAST ARM
	TRAFFIC SIGNAL FACE W/ BACKPLATE
	TRAFFIC SIGNAL FACE
	PEDESTRIAN SIGNAL FACE
	PEDESTRIAN PUSH BUTTON
	TRAFFIC SIGNAL CONTROLLER AND CABINET
	PULL BOX - TYPE I (800x400)
	PULL BOX - TYPE II (400x250)
●	PULL BOX - SPECIAL
	CONDUIT - PVC SCHEDULE 80
	VEHICLE LOOP DETECTOR (12mx1.8m)
	MICRO LOOP DETECTOR W/SAWCUT LEAD-IN
	MAST ARM MOUNTED SIGN
	FIRE PREEMPTION UNIT AND TIMER
	PROPOSED LUMINAIRE

SIGNS - FOR INFORMATION ONLY

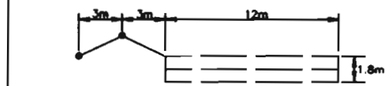

LOOP DETECTOR AND MICRO LOOP DETECTOR INSTALLATION DETAIL

SIGNAL HEADS

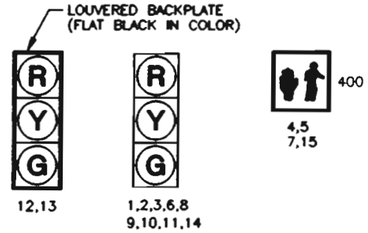

ALL VEHICLE SIGNAL HEADS SHALL BE POLYCARBONATE WITH 300mm SECTIONS AND TUNNEL VISORS.

ALL VEHICLE AND PEDESTRIAN SIGNAL HEADS SHALL BE BLACK IN COLOR.

NOTE: WHOLE NUMBERS INDICATE MILLIMETERS
DECIMAL NUMBERS INDICATE METERS.

FELSBURG HOLT & ULLEVIG

C-470/YOSEMITE INTERCHANGE

TRAFFIC SIGNAL PLAN
YOSEMITE ST. STA. 0+00 TO STA. 3+00

DATE	PROJECT NO.	DESIGNED BY	DRAWN BY	CHECKED BY	SHEET NO.	OF	SHEETS	DRAWING NO.
FEB 96	95-088	JGF	SS	RRE	2	5		TS-2

COMPUTER GENERATED DRAWING. DO NOT ALTER MANUALLY

AS CONSTRUCTED			
NO REVISIONS ☐	REVISED ☐	VOID ☐	

FEDERAL RD REGION NO.	DIVISION	PROJ. NO.	SHEET NO.	TOTAL SHEETS
VIII	COLORADO	CC 4701-082	140	

REVISIONS		

NOTES

1. Except as modified in the plans, all work shall be in accordance with "Standard Specifications for Road and Bridge Construction", 1991 and "Standards Plans", November 1992, by the Colorado Department of Transportation (CDOT).
2. Conduit, pole, detector and controller cabinet locations are approximate. Exact location shall be determined by the Engineer in the field. Traffic signal poles and mast arms shall not be installed until exact location of pole bases is field verified. Douglas County is responsible for ordering signal poles and mast arms. The Contractor shall pick up signal poles and mast arms from Douglas County at 3030 North Industrial Way, Castle Rock, Co. Contractor to contact Douglas County (Carlos Zambrano, 660-7475) a minimum of 48 hours and a maximum of 96 hours prior to starting traffic signal construction.
3. All existing utility locations are approximate. The Contractor shall field verify the exact location of all existing utilities before commencing work and agrees to be fully respansible for any and all damages which may occur by the Contractor's failure to exactly locate and preserve any and all underground utilities.
4. Payment shall be made only for items in the pay item list. All other items shall be considered incidental to the work.
5. All signal heads shall be polycarbonate type and black in color. Traffic signal poles shall be black in color.
6. The Contractor shall submit a traffic control plan for construction to the Engineer with the permit application. A public way work permit will not be issued without an approved traffic control plan for traffic control during construction.
7. The controller cabinet shall be installed such that with the front door open a technician views both the controller and the intersection.
8. The controller shall be a Type 170 and the controller cabinet shall be a Model 336S.
9. Mast arm signal heads shall be mounted approximately level with one another, with a 5.2 to 5.8 meter clearance above pavement grade at its highest elevation. All traffic signal vehicle heads shall be centered over the approach through and left turn lanes.
10. The contractor shall provide the Engineer with at least four (4) sets of equipment specifications/descriptions and obtain approvals before ordering the equipment.
11. Upon completion of the work, the Contractor shall submit record drawings, corrected plans and any additional data required by the Engineer showing in detail all construction changes.
12. An electrical permit and subsequent inspection by Douglas County is required before Public Service Company of Colorado will execute power to the intersection. Public Service contact: Cheri Weers at 571-2505.
13. All pull boxes shall be constructed of fiberglass reinforced polymer concrete.
14. Existing curb and gutter, and sidewalk shall not be disturbed during placement of conduit. Conduit under these areas shall be placed by moling, boring or hand digging. Trenching is allowed only in dirt or grass areas, and in Yosemite St. because of Asphalt Overlay as part of this project. The Contractor is fully responsible for any and all damages to existing curb and gutter, and sidewalk resulting from moling, boring or hand digging of conduit.
15. 75mm conduit shall carry 120 volt load wiring only. 50mm conduits shall carry detector, luminaire and interconnect wiring in separate conduits unless specified otherwise.
16. Contractor shall provide pedestrian push buttons and R10-4b signs incidental to the Traffic Signal Controller (Type 170) pay item. The following is an estimate of the required number of pedestrian push buttons and signs for this project.

INTERSECTION	PUSH BUTTONS/SIGNS
Yosemite Street/ C-470 EB Off Ramp	4
Yosemite Street/ C-470 WB On Ramp	8

17. Traffic signal pole foundations shall be constructed per CDOT'S latest M & S Standards. The Contractor shall field verify soil conditions at the project site to assure that all foundation designs are adequate. The Contractor shall have the foundation design for the double mast arm pole verified by a licensed structural engineer in the State of Colorado. The Contractor shall be fully responsible to verify the adequacy of all pole foundations and shall hold CDOT and Douglas County harmless for foundation failures resulting from inadequate design or improper foundation construction. The design for the double mast arm foundation shall be submitted to the Engineer and Douglas County for review.
18. Contractor shall install a utility meter housing per Public Service Company of Colorado Standards at the power source locations. All electrical service used for the operation of the traffic signal shall be wired to this installation.

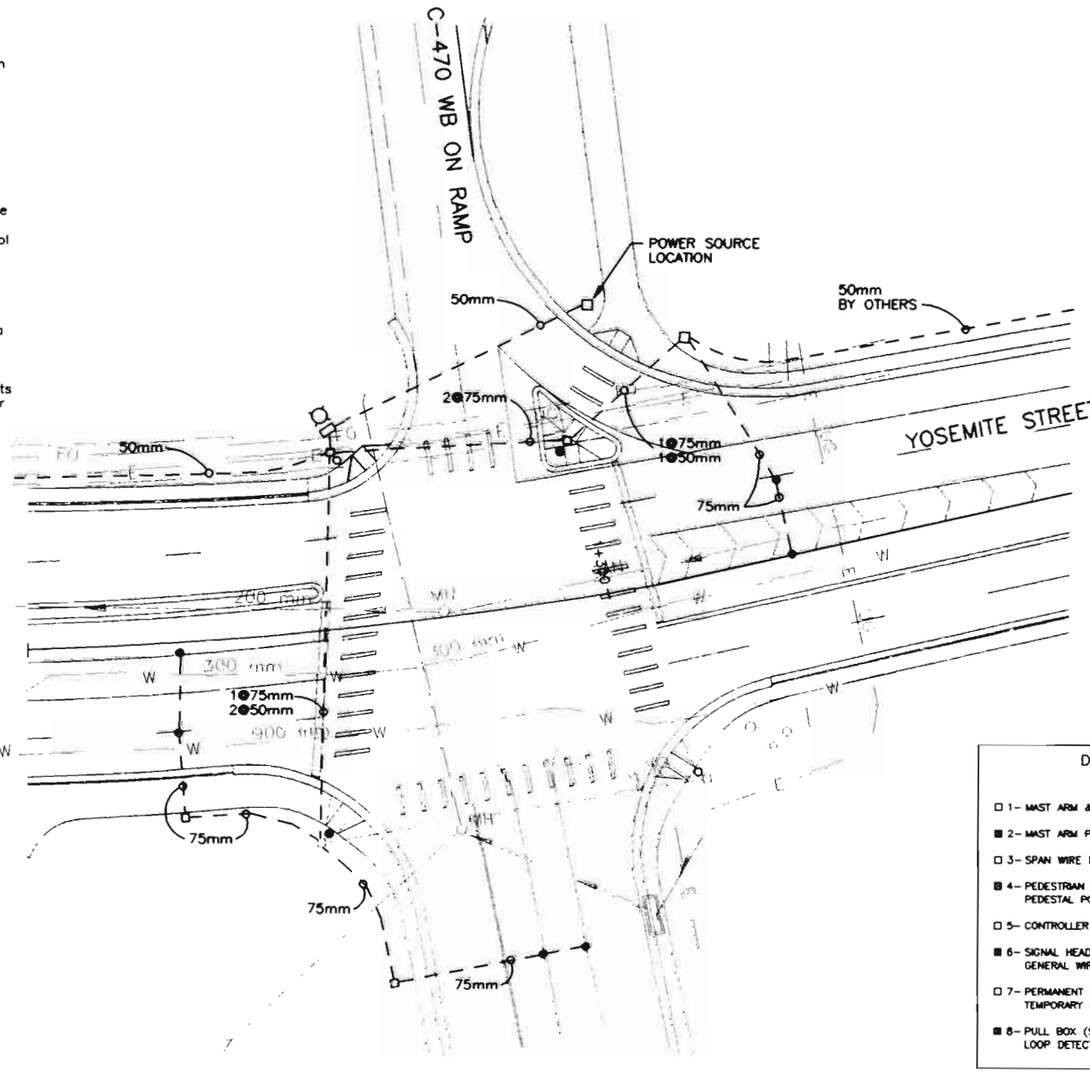

PARK MEADOWS TOWN CENTER ACCESS

Original Scale 1:250

LEGEND

SYMBOL	ITEM
●	TRAFFIC SIGNAL PEDESTAL POLE
○	TRAFFIC SIGNAL POLE W/ MAST ARM
⌑	TRAFFIC SIGNAL CONTROLLER AND CABINET
▭	PULL BOX - TYPE I (800x400)
▫	PULL BOX - TYPE II (400x250)
●	PULL BOX - SPECIAL
- - - - -	CONDUIT - PVC SCHEDULE 80

FIBERGLASS FOUNDATION DETAIL

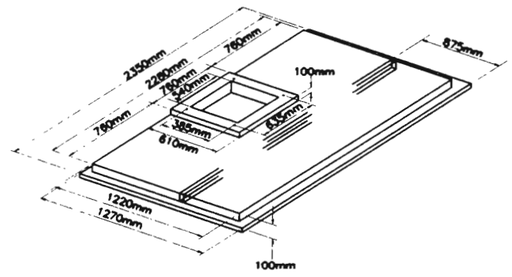

DOUGLAS COUNTY STANDARD SIGNAL DETAILS CHECK-OFF, FOR USE ON THIS PROJECT

SEE TS-5 THROUGH TS-11

- ☐ 1- MAST ARM & POLE
- ■ 2- MAST ARM POLE FOOTINGS
- ☐ 3- SPAN WIRE POLE
- ■ 4- PEDESTRIAN PUSH BUTTON POLE PEDESTAL POLE
- ☐ 5- CONTROLLER CABINET INSTALLATION
- ■ 6- SIGNAL HEADS & MOUNTING GENERAL WIRING NOTES
- ☐ 7- PERMANENT (PRECAST) PULL BOX TEMPORARY (PLASTIC) PULL BOX
- ■ 8- PULL BOX (SPECIAL) LOOP DETECTOR LEAD-IN
- ■ 9- DETECTORS CONDUIT INSTALLATIONS
- ■ 10- UNDERGROUND POWER SCHEMATIC-SIGNALS GROUND TRENCHING
- ■ 11- UNDERGROUND POWER FEED OVERHEAD POWER FEED
- ☐ 12- SCHOOL FLASHING BEACONS- SIDE OF ROAD
- ☐ 13- SCHOOL FLASHING BEACON-OVERHEAD
- ☐ 14- WARNING/REGULATORY FLASHING BEACON TYPICAL CROSSWALK MARKING
- ☐ 15- ILLUMINATED STREET NAME SIGN
- ☐ 16- BLANK-OUT REGULATORY/WARNING SIGN

NOTE: WHOLE NUMBERS INDICATE MILLIMETERS DECIMAL NUMBERS INDICATE METERS.

FELSBURG HOLT & ULLEVIG

C-470/YOSEMITE INTERCHANGE

TRAFFIC SIGNAL PLAN
YOSEMITE ST. STA. 0+00 TO STA. 3+00

DATE	PROJECT NO.	DESIGNED BY JGF	SHEET NO. 3	DRAWING NO.
FEB 96	95-088	DRAWN BY SS	OF 5 SHEETS	TS-3
		CHECKED BY RRF		

COMPUTER GENERATED DRAWING DO NOT ALTER MANUALLY

AS CONSTRUCTED			
NO REVISIONS ☐	REVISED ☐	VOID ☐	

FEDERAL RD REGION NO.	DIVISION	PROJ. NO.	SHEET NO.	TOTAL SHEETS
VIII	COLORADO	CC 4701-082	141	

REVISIONS		

SUMMARY OF TRAFFIC SIGNAL APPROXIMATE QUANTITIES –
INTERCONNECT QUANTITIES BETWEEN INTERSECTIONS SHOWN ON SI-1

ITEM NO.	DESCRIPTION	UNIT	QUANT.
613	50mm ELECTRICAL CONDUIT (PLASTIC)	m	105
613	50mm ELECTRICAL CONDUIT (PLASTIC)(INSTALL ONLY)	m	40
613	75mm ELECTRICAL CONDUIT (PLASTIC)	m	205
613	LUMINAIRE HIGH PRESSURE SODIUM (250 WATT)	EACH	2
614	PEDESTRIAN SIGNAL FACE (400)	EACH	8
614	TRAFFIC SIGNAL FACE (300-300-300)	EACH	10
614	TRAFFIC SIGNAL FACE (300-300-300-300-300)	EACH	4
614	FIRE PREEMPTION UNIT AND TIMER	EACH	1
614	LOOP DETECTOR WIRE	m	630
614	TRAFFIC SIGNAL VEHICLE DETECTOR AMPLIFIER (LOOP TYPE)	EACH	3
	(4 CHANNEL)		
614	TRAFFIC SIGNAL VEHICLE DETECTOR (MICRO TYPE)	EACH	10
614	TRAFFIC SIGNAL-LIGHT POLE STEEL (1 MAST ARM)(INSTALL ONLY)	EACH	1
614	TRAFFIC SIGNAL-LIGHT POLE STEEL (2 MAST ARM)(INSTALL ONLY)	EACH	1
614	TRAFFIC SIGNAL PEDESTAL POLE STEEL (INSTALL ONLY)	EACH	2
614	TRAFFIC SIGNAL CONTROLLER (TYPE 170)	EACH	1

SIGNS – FOR INFORMATION ONLY

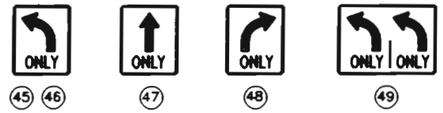

45 46 47 48 49

Original Scale 1:250

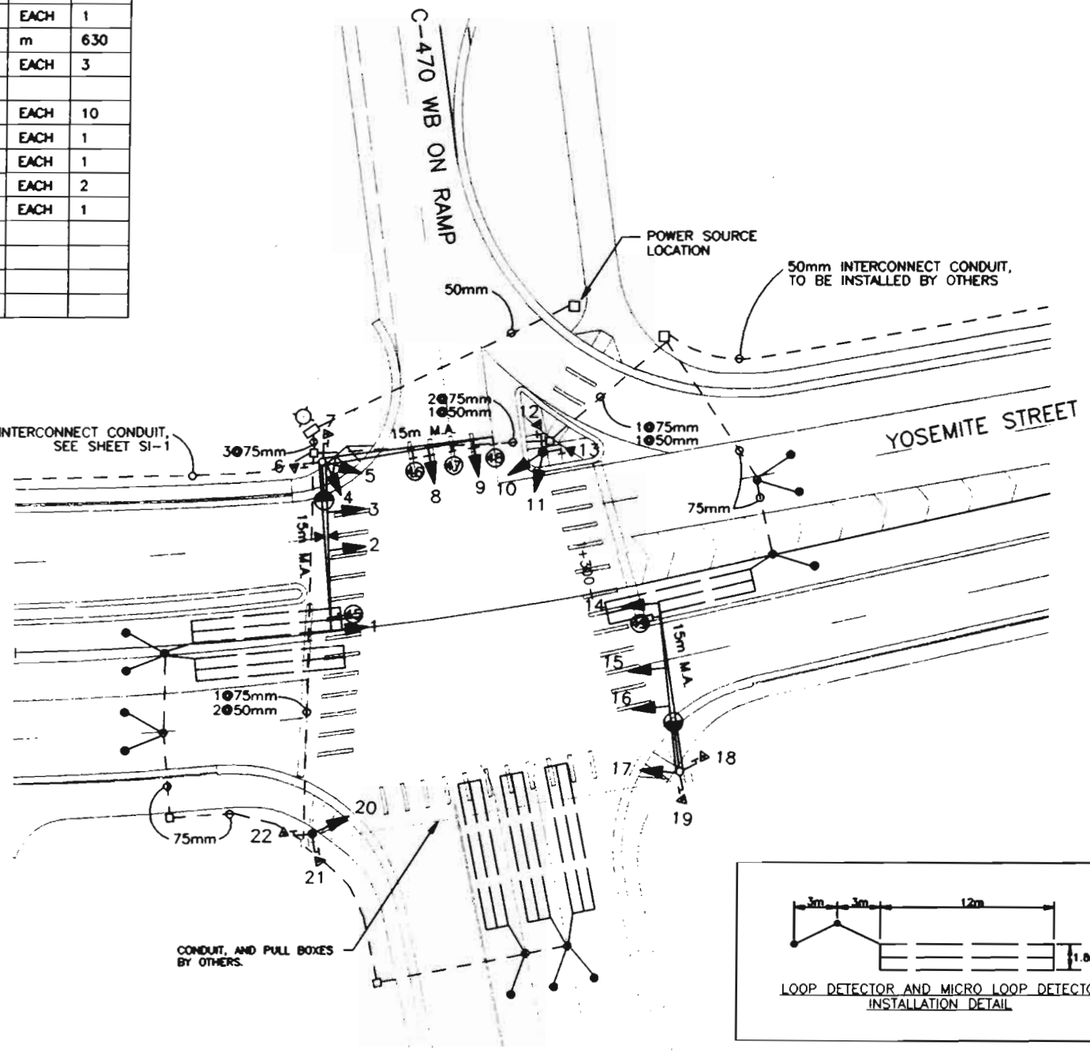

LEGEND

SYMBOL	ITEM
●	TRAFFIC SIGNAL PEDESTAL POLE
	TRAFFIC SIGNAL POLE W/ MAST ARM
	TRAFFIC SIGNAL FACE W/ BACKPLATE
	TRAFFIC SIGNAL FACE
	PEDESTRIAN SIGNAL FACE
	PEDESTRIAN PUSH BUTTON
	TRAFFIC SIGNAL CONTROLLER AND CABINET
	PULL BOX – TYPE I (800x400)
	PULL BOX – TYPE II (400x250)
●	PULL BOX – SPECIAL
	CONDUIT – PVC SCHEDULE 80
	VEHICLE LOOP DETECTOR (12mx1.8m)
	MICRO LOOP DETECTOR-W/SAWCUT LEAD-IN
	MAST ARM MOUNTED SIGN
	FIRE PREEMPTION UNIT AND TIMER
	PROPOSED LUMINAIRE
	BY OTHERS

SIGNAL PHASING

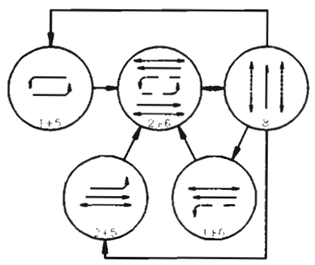

KEY
- PHASE MOVEMENT
- PERMISSIVE LEFT TURN
- PEDESTRIAN MOVEMENT

2015PM PEAK HOUR TRAFFIC FORECAST

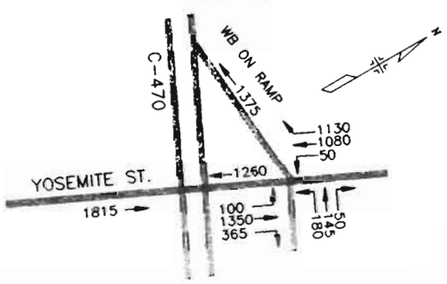

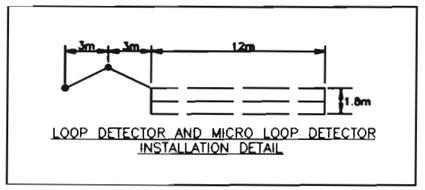

LOOP DETECTOR AND MICRO LOOP DETECTOR INSTALLATION DETAIL

SIGNAL HEADS

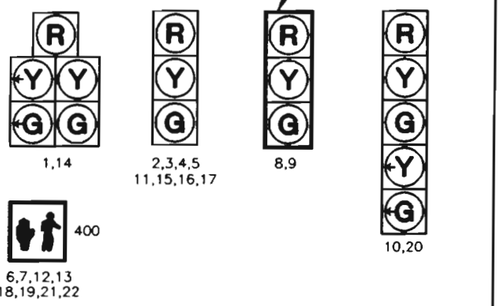

ALL VEHICLE SIGNAL HEADS SHALL BE POLYCARBONATE WITH 300mm SECTIONS AND TUNNEL VISORS.

ALL VEHICLE AND PEDESTRIAN SIGNAL HEADS SHALL BE BLACK IN COLOR.

NOTE: WHOLE NUMBERS INDICATE MILLIMETERS
DECIMAL NUMBERS INDICATE METERS.

FELSBURG HOLT & ULLEVIG

C-470/YOSEMITE INTERCHANGE

TRAFFIC SIGNAL PLAN
YOSEMITE ST. STA. 0+00 TO STA. 3+00

DATE	PROJECT NO.	DESIGNED BY JGF	SHEET NO. 4	DRAWING NO.
FEB 96	95-088	DRAWN BY SS	OF 5 SHEETS	TS-4
		CHECKED BY RRF		

COMPUTER GENERATED DRAWING DO NOT ALTER MANUALLY

AS CONSTRUCTED			
NO REVISIONS ☐	REVISED ☐	VOID ☐	

FEDERAL RD REGION NO.	DIVISION	PROJ. NO.	SHEET NO.	TOTAL SHEETS
VIII	COLORADO	CC 4701-082	142	

REVISIONS		

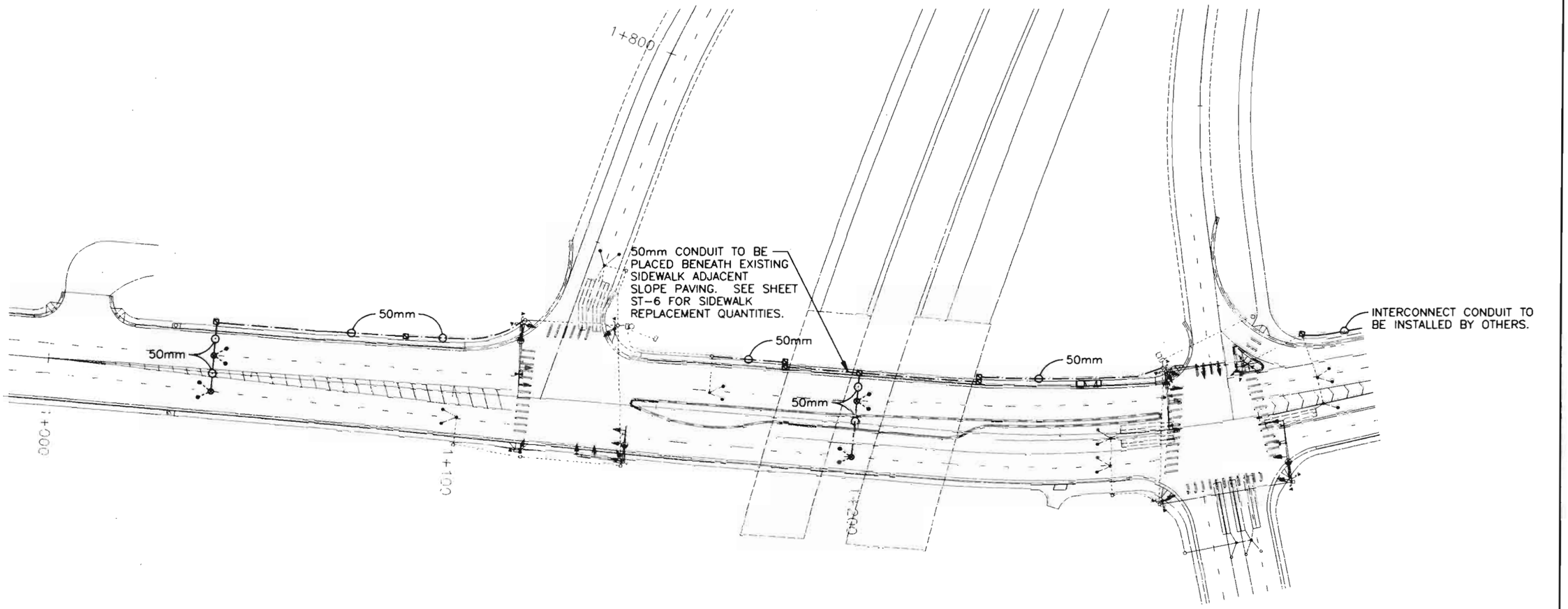

LEGEND

SYMBOL	ITEM
▣	PULL BOX – TYPE III (275mm X 275mm)
◉	PULL BOX – SPECIAL
—·—	CONDUIT – PVC SCHEDULE 80
---●	MICRO LOOP DETECTOR W/ SAWCUT LEAD-IN

SUMMARY OF TRAFFIC SIGNAL APPROXIMATE QUANTITIES

CONTRACT ITEM NO.	CONTRACT ITEM	UNIT	TOTAL
613	50mm ELECTRICAL CONDUIT (PLASTIC)	M	250
614	TRAFFIC SIGNAL VEHICLE DETECTOR (MICRO TYPE)	EACH	8

Original Scale 1:500

FELSBURG HOLT & ULLEVIG

C-470/YOSEMITE INTERCHANGE

TRAFFIC SIGNAL INTERCONNECT

DATE	PROJECT NO.	DESIGNED BY JF	SHEET NO. 1	DRAWING NO.
FEB 96	95-088	DRAWN BY SS	OF 1 SHEETS	S-1
		CHECKED BY DR		

D:\95088\ACAD\A5089874.dwg, 2-1, 02/29/96 at 16:55

COMPUTER GENERATED DRAWING DO NOT ALTER MANUALLY

FEDERAL RD REGION NO.	DIVISION	PROJ. NO.	SHEET NO.	TOTAL SHEETS
VIII	COLORADO	CC 4701-082	143	

TYPICAL TRAFFIC SIGNAL POLE FOOTING

5/8"x12' COPPER WELD GROUNDING ROD. LOCATE IN PULL BOX AND BOND DIRECTLY TO POLE, OR ANGLE THROUGH FOUNDATION

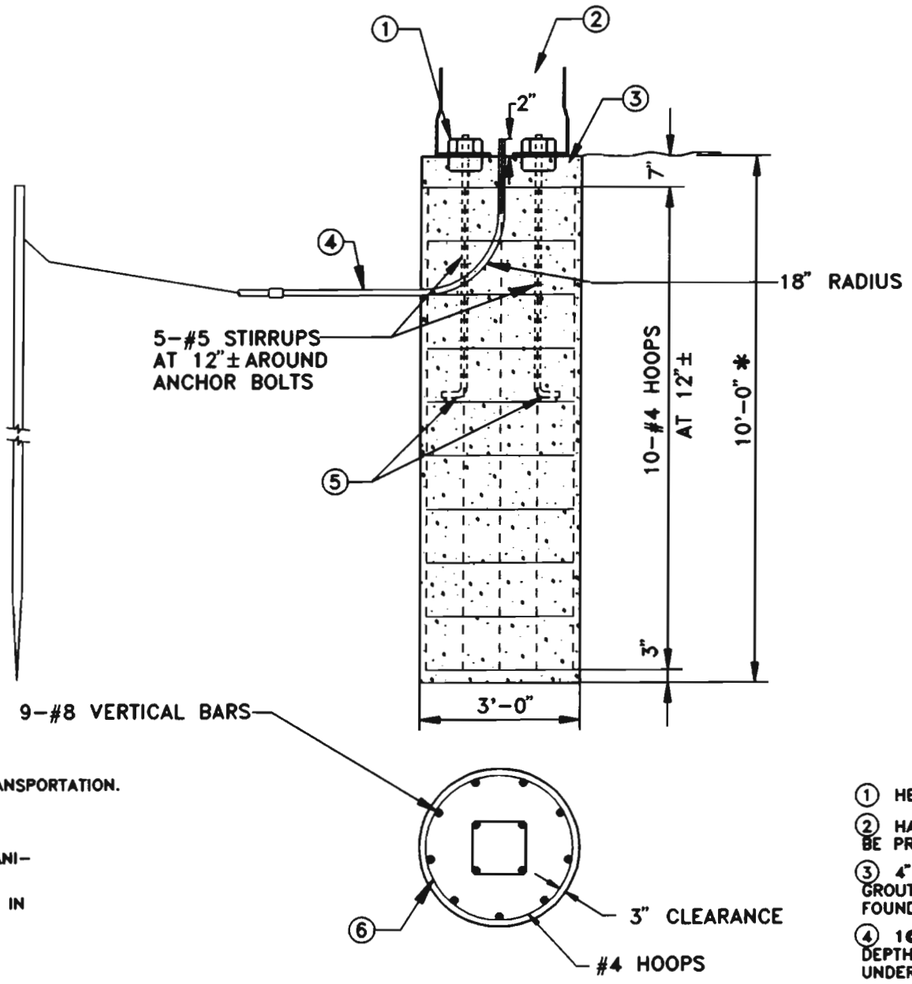

* FOR 55 TO 65 FOOT MAST ARM LENGTHS, INCREASE DEPTH TO 12'-0" AND ADD 2 #4 HOOPS. THESE DESIGNS REQUIRE THAT THE FOOTING BE FOUNDED IN COMPACT SAND, CLAY OR SANDY CLAY, AND BE LOCATED ABOVE THE WATER TABLE. IF, BY VISUAL INSPECTION OF THE HOLE OTHER MATERIAL IS PRESENT SUCH AS BEDROCK OR SOFT CLAY, A SOIL INVESTIGATION MAY BE NECESSARY TO DETERMINE CONDITIONS AND TO MODIFY THE DESIGN ACCORDINGLY.

GENERAL NOTES

1. CONCRETE F_C^1 = CLASS B, PER THE COLORADO DEPT. OF TRANSPORTATION. REINFORCING STEEL: PER AASHTO M31 SPECIFICATION, GRADE 60 FOR #9, #5 & #4 BARS.
2. SHAFT FOR CONCRETE FOUNDATION TO BE DRILLED BY MECHANICAL AUGER.
3. FOUNDATION DESIGN REQUIRES THAT THE SHAFT BE FOUNDED IN COMPACT SAND, CLAY, OR SANDY CLAY. IF BY VISUAL INSPECTION OF THE HOLE OTHER MATERIAL IS PRESENT, THE FOUNDATION DESIGN SHALL BE MODIFIED AS DETERMINED BY THE ENGINEER.
4. SHOULD ROCK BE ENCOUNTERED, THE SHAFT SHOULD EXTEND 6 FT. MINIMUM INTO ROCK. THE ALLOWABLE SAFE LATERAL BEARING CAPACITY OF ROCK TO BE 4,300 LBS./SQ. FT. THE SOIL (INCLUDING ROCK) SURROUNDING THE SHAFT SHOULD BE INVESTIGATED TO ENSURE IT WILL RESIST THE TORSIONAL MOMENT OF 93,435 FT. LBS.
5. CONCRETE SHALL BE POURED IN LIFTS NOT EXCEEDING 3 FEET IN DEPTH. AT THE POURING OF EACH LIFT, CONCRETE SHALL BE MECHANICALLY VIBRATED TO REMOVE AIR POCKETS.
6. FOUNDATIONS SHOULD BE POURED 10 TO 20 DAYS IN ADVANCE OF POLE INSTALLATION. SEE PROJECT SPECIAL PROVISIONS FOR SPECIFIC DIRECTIONS.
7. WHEN AMBIENT TEMPERATURE IS BELOW 40° F, POURED FOUNDATIONS SHALL BE COVERED WITH BLANKETS AND/OR STRAW PER DIRECTION OF THE ENGINEER.

FOOTING NOTES

1. HEX NUTS
2. HAND HOLE SHALL BE PROVIDED
3. 4" MIN. NON-SHRINKABLE GROUT OVER ROUGH FOUNDATION
4. 1@3" & 1@2" CONDUIT (24" MIN. DEPTH, 30" MIN. DEPTH UNDER ROADWAY)
5. INSTALL ANCHOR BOLTS (FURNISHED WITH POLE) PER STANDARD TEMPLATE. SEE MAST ARM AND POLE DETAIL SHEET.
6. MINIMUM OVERLAP OF 12".

TS-5

DOUGLAS COUNTY
STANDARD SIGNAL DETAILS

MAST ARM POLE FOOTINGS

ORIGINAL 6-93 2/16	DATE:	DESIGNED BY:	JOB NO.
	SCALE:	DRAWN BY:	SHEET NO. OF
REVISION DATE			

D:\MAF.dwg, 1"=1', 08/10/93 at 08:40

FEDERAL RD REGION NO.	DIVISION	PROJ. NO.	SHEET NO.	TOTAL SHEETS
VIII	COLORADO	[illegible]	144	

FINISH REQUIREMENTS

ALL PEDESTRIAN PUSH BUTTONS AND PEDESTAL POLES SHALL BE FACTORY PAINTED WITH A RUST INHIBITIVE EPOXY PRIMER (MIN. DRY FILM THICKNESS OF 2.0 MILS) AND A COMPATIBLE POLYURETHANE TOP COAT LIQUID COATING (MIN. DRY FILM THICKNESS OF 2.0 MILS). ALL ACCESSIBLE INTERIOR SURFACES SHALL BE COATED WITH A RUST INHIBITIVE PRIMER (MIN. DRY FILM THICKNESS OF 1.0 MILS). ALL SURFACES TO BE TREATED SHALL BE ABRASIVE BLASTED TO A NEAR WHITE FINISH.

THE TOP COAT SHALL BE AMERON AMERSHIELD, TNEMEC ENDURA-SHIELD III, NICKLAD 105, OR APPROVED SUBSTITUTE, AND SHALL BE SEMI-GLOSS BLACK IN COLOR. FOLLOWING INSTALLATION OF POLES, CONTRACTOR SHALL USE FACTORY SUPPLIED PAINT TO TOUCH UP NICKS AND ABRASIONS.

R10-4b
9"x12"

SIGN SHALL BE LABEL (STICK-ON) TYPE

TYPICAL PEDESTRIAN PUSH-BUTTON SIGN

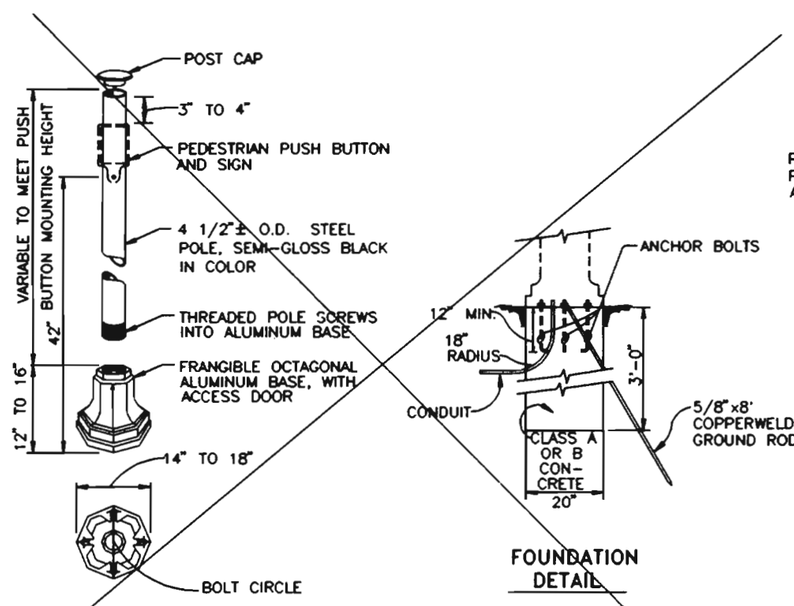

FOUNDATION DETAIL

PEDESTRIAN PUSH BUTTON POLE

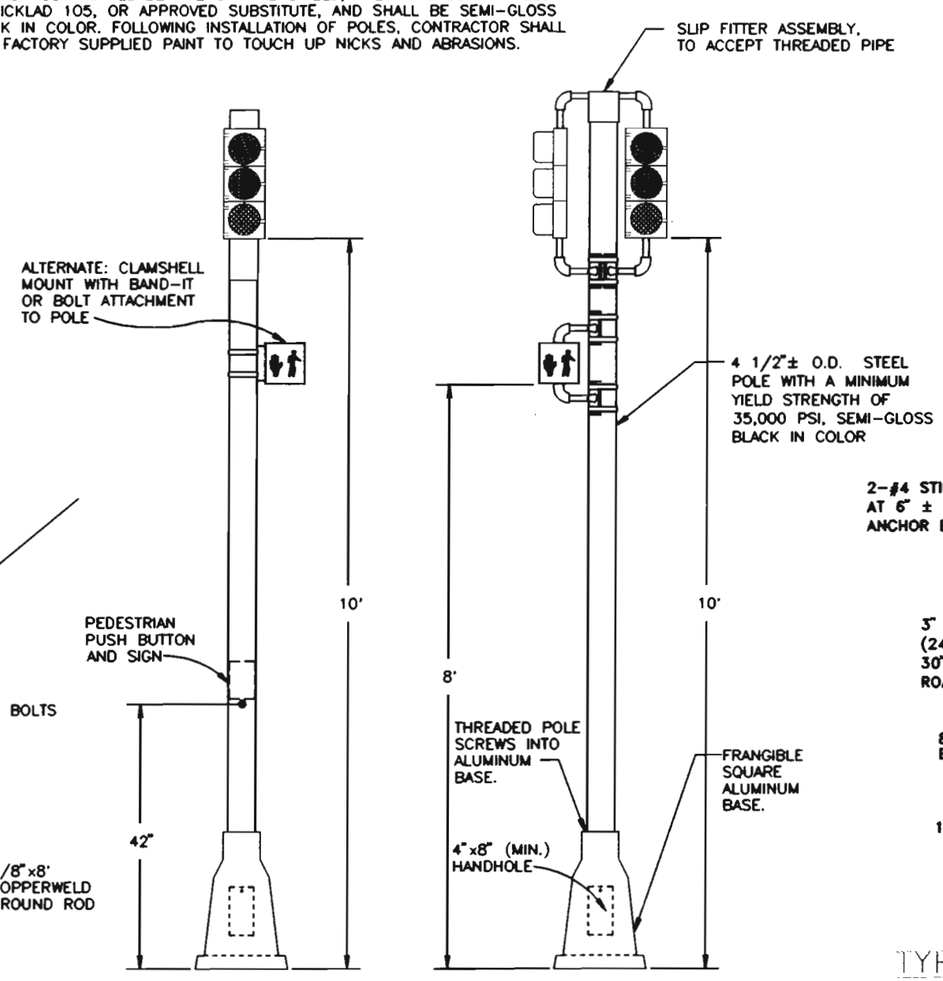

TYPICAL PEDESTAL POLE DETAIL

FOOTING NOTES

1. ANCHOR BOLTS (FURNISHED WITH POLE) PER MANUFACTURER'S TEMPLATE.
2. THESE DESIGNS REQUIRE THAT THE FOOTING BE FOUNDED IN COMPACT SAND, CLAY OR SANDY CLAY, AND BE LOCATED ABOVE THE WATER TABLE. IF, BY VISUAL INSPECTION OF THE HOLE OTHER MATERIAL IS PRESENT, THE FOUNDATION DESIGN MAY NEED TO BE MODIFIED.
3. 5/8"x8' COPPERWELD GROUND ROD THROUGH FOUNDATION INTO GROUND, OR DRIVEN IN ADJACENT PULL BOX AND BONDED TO POLE WITH UNDERGROUND STRAPPING.
4. HANDHOLE SHALL BE PROVIDED.

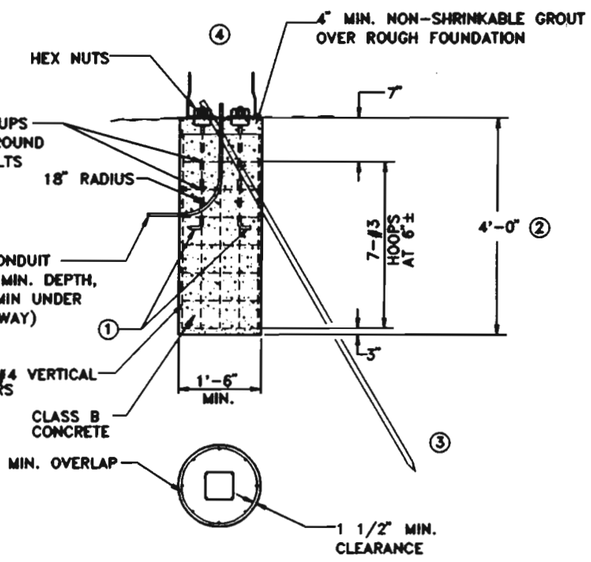

TYPICAL PEDESTAL POLE FOOTING
(CAST IN PLACE)

TS-6

DOUGLAS COUNTY
STANDARD SIGNAL DETAILS

PEDESTRIAN PUSH BUTTON POLE
PEDESTAL POLE

ORIGINAL 6-93 4/1	DATE:	DESIGNED BY:	JOB NO.
REVISION DATE	SCALE:	DRAWN BY:	SHEET NO. OF

D:PPBPPL.DGN 1"=1", 10/04/93 at 01:48

FEDERAL AID REGION NO.	DIVISION	PROJ. NO.	SHEET NO.	TOTAL SHEETS
VIII	COLORADO	CC 4701-082	145	

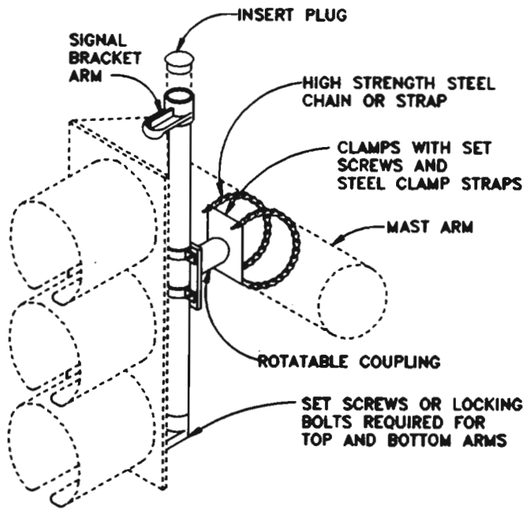

DETAIL OF MAST ARM MOUNTING FOR IN-LINE SIGNAL HEAD (3-SECTION OR 5-SECTION)

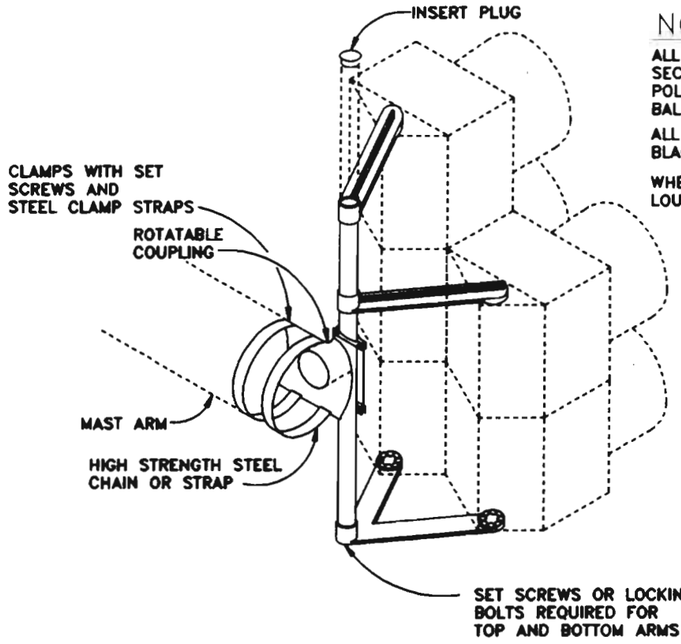

DETAIL OF MAST ARM MOUNTING FOR SIDE-BY-SIDE SIGNAL HEAD (5-SECTION)

NOTES

ALL VEHICLE SIGNAL HEADS SHALL BE POLYCARBONATE WITH 12" SECTIONS AND TUNNEL VISORS. 8" SECTIONS MAY BE USED FOR POLE MOUNTED HEADS AND FOR OVERHEAD YELLOW AND GREEN BALL SECTIONS, WITH PRIOR APPROVAL OF THE ENGINEER.

ALL VEHICLE AND PEDESTRIAN SIGNAL HEADS SHALL BE BLACK IN COLOR.

WHERE INCLUDED ON PLANS, BACKPLATES SHALL BE THE LOUVERED TYPE

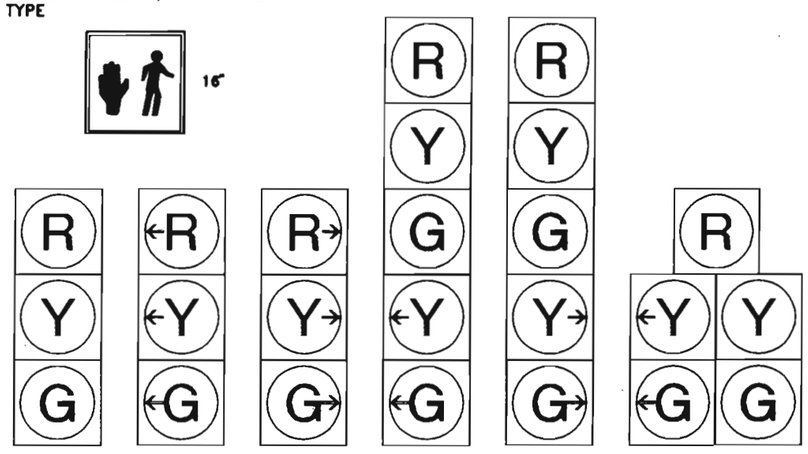

TYPICAL PEDESTRIAN AND VEHICLE SIGNAL HEADS

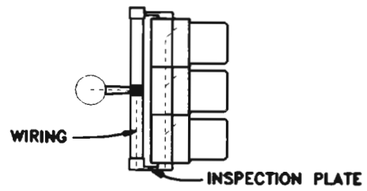

WIRING DIAGRAM

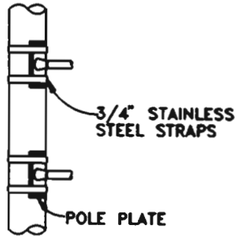

TYPICAL SIDE OF POLE SIGNAL MOUNTING

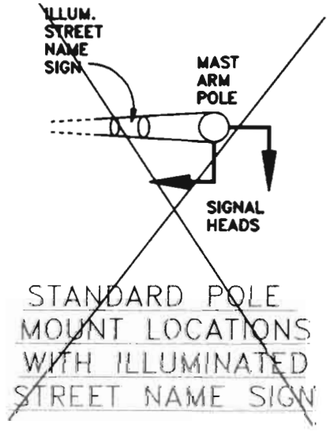

STANDARD POLE MOUNT LOCATIONS WITH ILLUMINATED STREET NAME SIGN

SIGNAL HEAD MOUNTING

MOUNTING NOTES

1. PIPE COUPLINGS FOR SIGNAL BRACKETS SHALL BE EITHER 1-1/2 OR 2 INCH DEPENDING UPON THE SIGNAL HEAD TO BE INSTALLED. SIGNAL BRACKETS SHALL BE FURNISHED BY THE MANUFACTURER OF THE SIGNAL HEADS.
2. UNLESS OTHERWISE SPECIFIED, ALL TRAFFIC SIGNALS MOUNTED ABOVE THE ROADWAY SHALL BE APPROXIMATELY LEVEL WITH ONE ANOTHER AND HAVE A HEIGHT OF 17' TO 19' ABOVE THE PAVEMENT GRADE AT THE ROADWAY CENTER. ALL SIDE-OF-POLE MOUNTED TRAFFIC SIGNALS SHALL HAVE A HEIGHT OF 10' ABOVE GROUND LINE AND PEDESTRIAN SIGNALS SHALL HAVE A HEIGHT OF 8' ABOVE GROUND LINE AS MEASURED TO THE BOTTOM OF THE SIGNAL HEAD HOUSING OR BRACKET.
3. MAST ARM MOUNTED SIGNAL HEADS SHALL USE ASTRO-TYPE MOUNTING BRACKETS. ALL SIGNAL HEADS SHALL BE MOUNTED IN SUCH A MANNER AS TO BE EASILY REMOVED FROM THERE SUPPORTING STRUCTURE.
4. GASKET SEALING COMPOUND SHALL BE USED IN ADDITION TO ANY LEAD WASHERS REQUIRED FOR CREATING A WATER-TIGHT CONNECTION BETWEEN THE SIGNAL HEAD AND MOUNTING BRACKET.
5. SIGNAL HEADS SHALL BE SECURELY AFFIXED BY USE OF A SERRATED COUPLING OR OTHER ACCESSORIES RECOMMENDED BY THE SIGNAL MANUFACTURER.
6. WIRING FROM INSIDE MAST ARM THROUGH A 1" FIELD DRILLED HOLE IN ARM SHALL BE BROUGHT THROUGH THE MOUNTING SUPPORT TUBE AND LOWER ARM (AS SHOWN). FIELD DRILLED HOLES SHALL HAVE RUBBER GROMMETS INSTALLED.

GENERAL WIRING NOTES

1. TRAFFIC SIGNAL CONDUIT SHALL NOT CARRY WIRING OF OTHER UTILITIES.
2. EXCEPT FOR LOOP DETECTOR LEADS, ALL SPLICES SHALL BE IN HANDHOLES AT POLE BASES AND NOT IN PULL BOXES.
3. LOOP DETECTOR LEADS SHALL BE SPLICED IN PULL BOX AT THE SIDE OF THE ROAD, AND NOT IN WATER VALVE PULL BOXES.
4. PEDESTRIAN AND VEHICLE SIGNAL HEADS SHALL BE INDIVIDUALLY WIRED FROM THE POLE BASE TO THE SIGNAL HEAD.
5. CONTRACTOR SHALL PROVIDE 2 WIRING DIAGRAMS OF THE SIGNAL INSTALLATION TO THE COUNTY.
6. UNLESS ALLOWED BY THE ENGINEER, WIRE SHALL NOT OCCUPY MORE THAN 40% OF THE INSIDE AREA OF CONDUIT.

TS-7

DOUGLAS COUNTY
STANDARD SIGNAL DETAILS

SIGNAL HEADS & MOUNTING
GENERAL WIRING NOTES

ORIGINAL 6-93 6/16 DATE:		DESIGNED BY:	JOB NO.
	SCALE:	DRAWN BY:	SHEET NO. OF
REVISION DATE			

D:\SIGS.dwg, 1"=1", 08/09/93 at 15:37

FEDERAL RD REGION NO.	DIVISION	PROJ. NO.	SHEET NO.	TOTAL SHEETS
VIII	COLORADO	CC 4701-082	146	

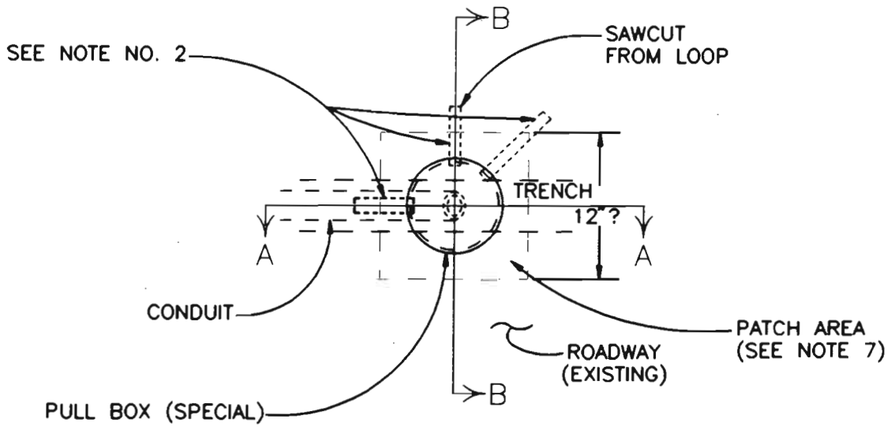

TOP VIEW

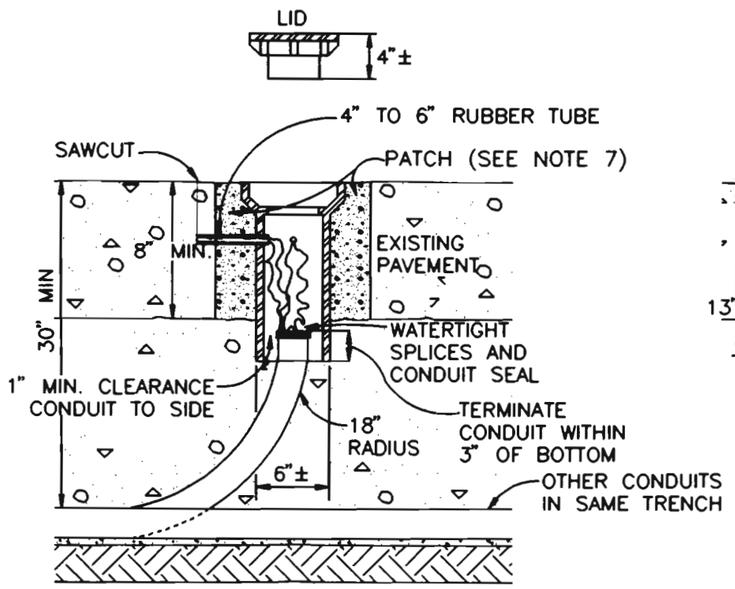

SECTION A–A

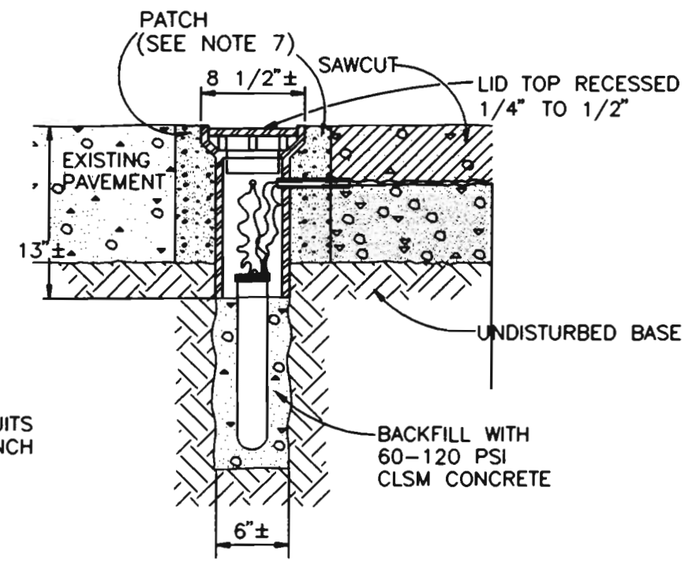

SECTION B–B

GENERAL NOTES

1. PULL BOX (SPECIAL) SHALL BE A WATER VALVE STEM TYPE PULL BOX MADE OF CAST IRON OR STEEL. THE PULL BOX SHALL HAVE CAPABILITY OF ACCEPTING RISER RINGS FOR FUTURE OVERLAYS. THE LID SHALL HAVE THE WORD "TRAFFIC" PRINTED ON IT.
2. PULL BOXES SHALL HAVE 3/4" TO 1" DIAMETER HOLES DRILLED OR TORCHED 3" FROM TOP TO ACCEPT A 4" TO 6" RUBBER TUBE (3/4" GARDEN HOSE). THE NUMBER OF HOLES SHALL BE AS PER PLANS OR AS DIRECTED BY THE ENGINEER.
3. CARE SHALL BE TAKEN DURING BACKFILL COMPACTION TO PREVENT COLLAPSE OF THE TUBES.
4. 2' MINIMUM SLACK OF LOOP WIRES IS TO BE PROVIDED SO THAT ALL TESTING CAN BE DONE OUTSIDE OF THE PULL BOX. SPLICE DETECTOR LEADS IN SIDE-OF-ROAD PULL BOX, NOT IN PULL BOX SPECIAL.
5. PULL BOX IS TO BE LOCATED IN AN AREA OF THE STREET NOT HEAVILY TRAVELED. FOR EDGE-OF-ROAD LOCATIONS, MAINTAIN A MINIMUM OF 12" FROM CONCRETE GUTTER PAN.
6. ALL WORK LISTED ABOVE FOR INSTALLATION OF PULL BOXES SHALL NOT BE PAID FOR SEPARATELY, BUT SHALL BE INCLUDED IN THE PRICE OF THE CONDUIT.
7. PAVEMENT HOLE FOR PULL BOX SHALL BE EITHER CORE DRILLED TO FULL DEPTH, OR SAW CUT TO FULL DEPTH IN 12"x12" SQUARE. FOR CORE DRILLING, GROUT PULL BOX IN PLACE. FOR SAW CUT, BACKFILL CUT OUT BY MATCHING EXISTING PAVEMENT MATERIAL.

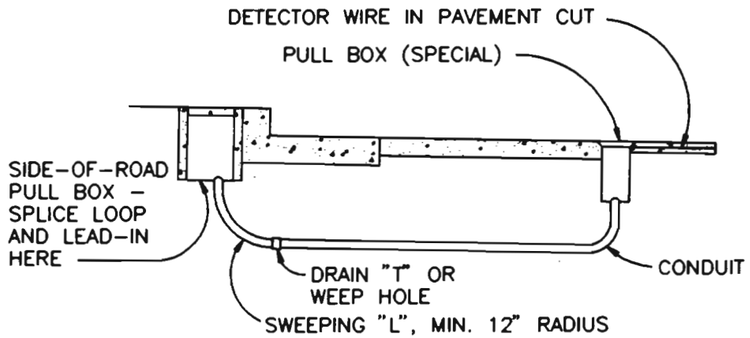

LOOP DETECTOR LEAD-IN

PULL BOX (SPECIAL)

TS-8

DOUGLAS COUNTY
STANDARD SIGNAL DETAILS

PULL BOX (SPECIAL)
LOOP DETECTOR LEAD-IN

ORIGINAL 6-93 8/16	DATE:	DESIGNED BY:	JOB NO.
	SCALE:	DRAWN BY:	SHEET NO. OF
REVISION DATE			

FEDERAL RD REGION NO.	DIVISION	PROJ. NO.	SHEET NO.	TOTAL SHEETS
VIII	COLORADO	CC 4701-082	147	

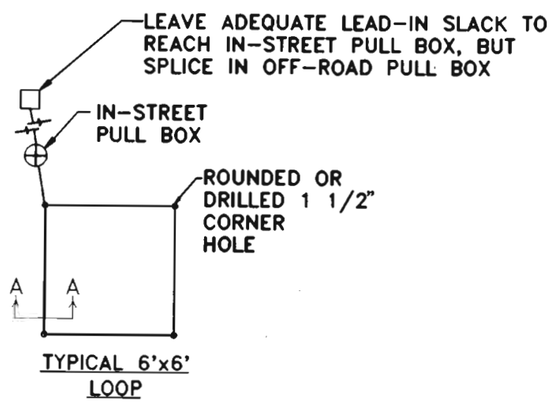

TYPICAL 6'x6' LOOP

SIZE OF LOOP	NO. OF TURNS
6'x6'	4
6'x8' TO 6'x20'	3
6'x22' TO 6'x40'+	2

NO. OF TURNS MAY BE ADJUSTED BY ENGINEER IN FIELD. WIRING CONNECTIONS TO BE FIELD DETERMINED.

LOOP TURNS

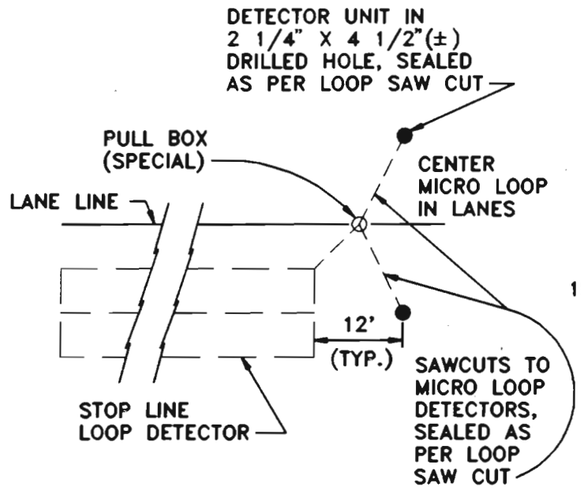

MICRO LOOP DETECTOR

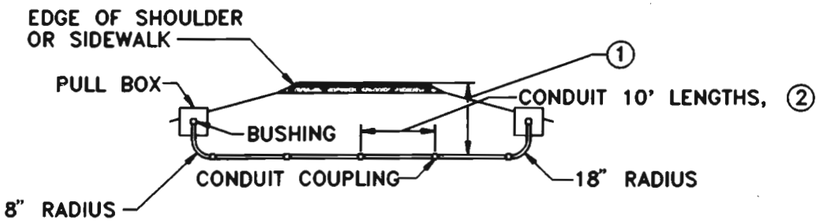

CONDUIT PLACEMENT UNDER PAVEMENT OR SIDEWALK

NOTES

① MINIMUM CONDUIT DEPTH:	UNDER PAVEMENT	UNDER SIDEWALK
	30"	24"

② ALL PVC CONDUIT SHALL BE SCHEDULE 80

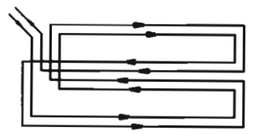

QUADRAPOLE WIRING

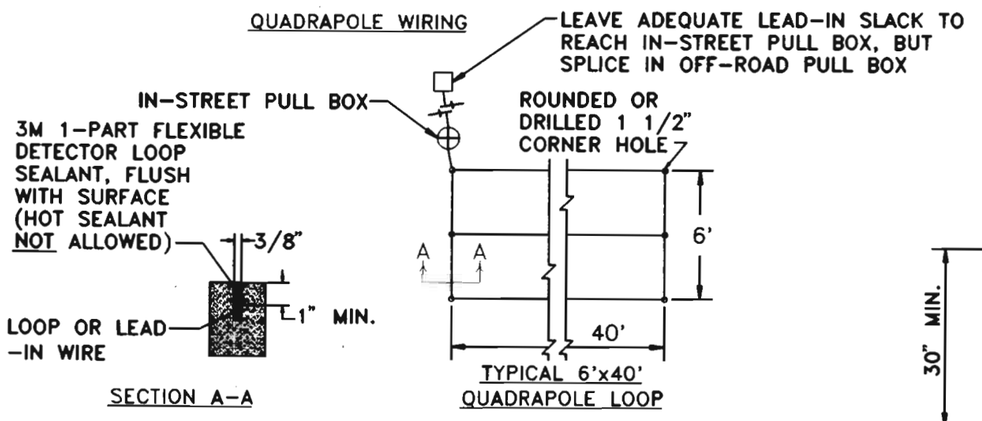

SECTION A-A

TYPICAL 6'x40' QUADRAPOLE LOOP

LOOP SAW CUT AND INSTALLATION

NOTES

1. ALL DETECTOR LOOPS SHALL BE #14 AWG THHN WIRE ENCASED IN PVC OR POLYETHYLENE TUBING.
2. IMMEDIATELY BEFORE LAYING THE LOOP CABLE, THOROUGHLY CLEAN AND DRY SAW CUT WITH HIGH PRESSURE OIL-FREE COMPRESSED AIR.
3. LOOP WIRE IN ADJACENT LOOPS SHALL BE LAID UNIFORMLY IN EITHER A CLOCKWISE OR COUNTER-CLOCKWISE DIRECTION AND THE LOOP TAGGED TO INDICATE THE DIRECTION.
4. USE A BLUNT, NON-METALLIC INSTRUMENT TO PUSH WIRE INTO SLOT. DO NOT COIL LEADS.
5. LOOP WIRE SHALL BE CONTINUOUS (NO SPLICES) FROM THE PULL BOX. SPLICES IN PULL BOX SHALL BE WATERPROOFED WITH SPLICE KIT.
6. CONTINUITY TEST FOR EACH LOOP SHALL BE CONDUCTED 1) BEFORE ANY LOOP SEALER IS INSTALLED AND 2) AFTER LOOP SEALER IS INSTALLED AND LEAD-IN CABLE IS SPLICED AND TRAINED TO THE CONTROLLER. "RESISTANCE-TO-GROUND" AND "INDUCTANCE" SHALL BE MEASURED AND RECORDED FOR EACH TEST.
7. DETECTOR WIRE ACROSS BRIDGE JOINTS SHALL BE ENCASED IN A 12" SECTION OF 3/4" PVC PIPE THAT SPANS THE JOINT AREA.

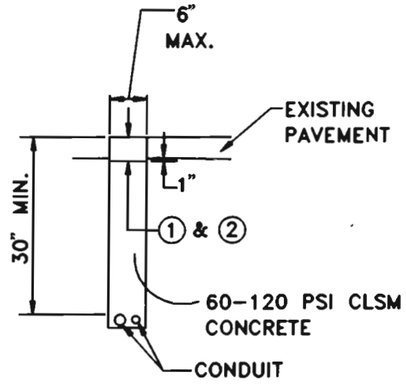

CONDUIT TRENCH DETAIL- WITHOUT PAVEMENT FABRIC

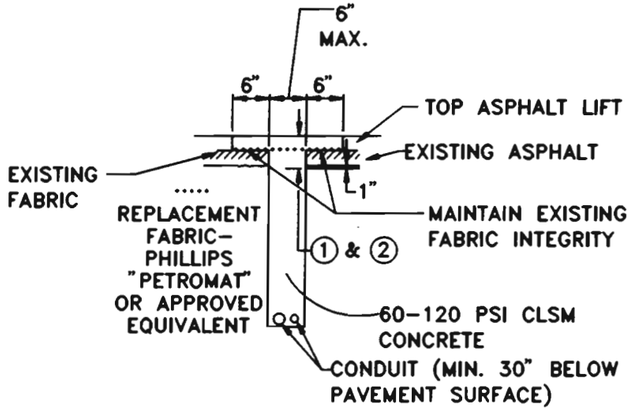

CONDUIT TRENCH DETAIL- WITH PAVEMENT FABRIC

NOTES

① HOT BITUMINOUS PAVEMENT (PATCHING) OR PORTLAND CEMENT CONCRETE PATCH, FULL DEPTH PLUS 1" (4" MIN). MATCH EXISTING PAVEMENT TYPE.

② FOR ASPHALT PATCH, 48 HOUR NOTICE TO THE ENGINEER REQUIRED PRIOR TO INSPECTION

TS-9

DOUGLAS COUNTY
STANDARD SIGNAL DETAILS

DETECTORS
CONDUIT INSTALLATIONS

ORIGINAL 6-93 9/16	DATE:	DESIGNED BY:	JOB NO.
	SCALE:	DRAWN BY:	SHEET NO. OF
REVISION DATE			

D:\CONDPLUS.dwg, 1"=1', 08/16/93 at 07:54

FEDERAL RD REGION NO.	DIVISION	PROJ. NO.	SHEET NO.	TOTAL SHEETS
VIII	COLORADO	CC 4701-082	148	

UNDERGROUND POWER SOURCE SCHEMATIC FOR SIGNALS WITH LUMINAIRES

(NO SCALE)

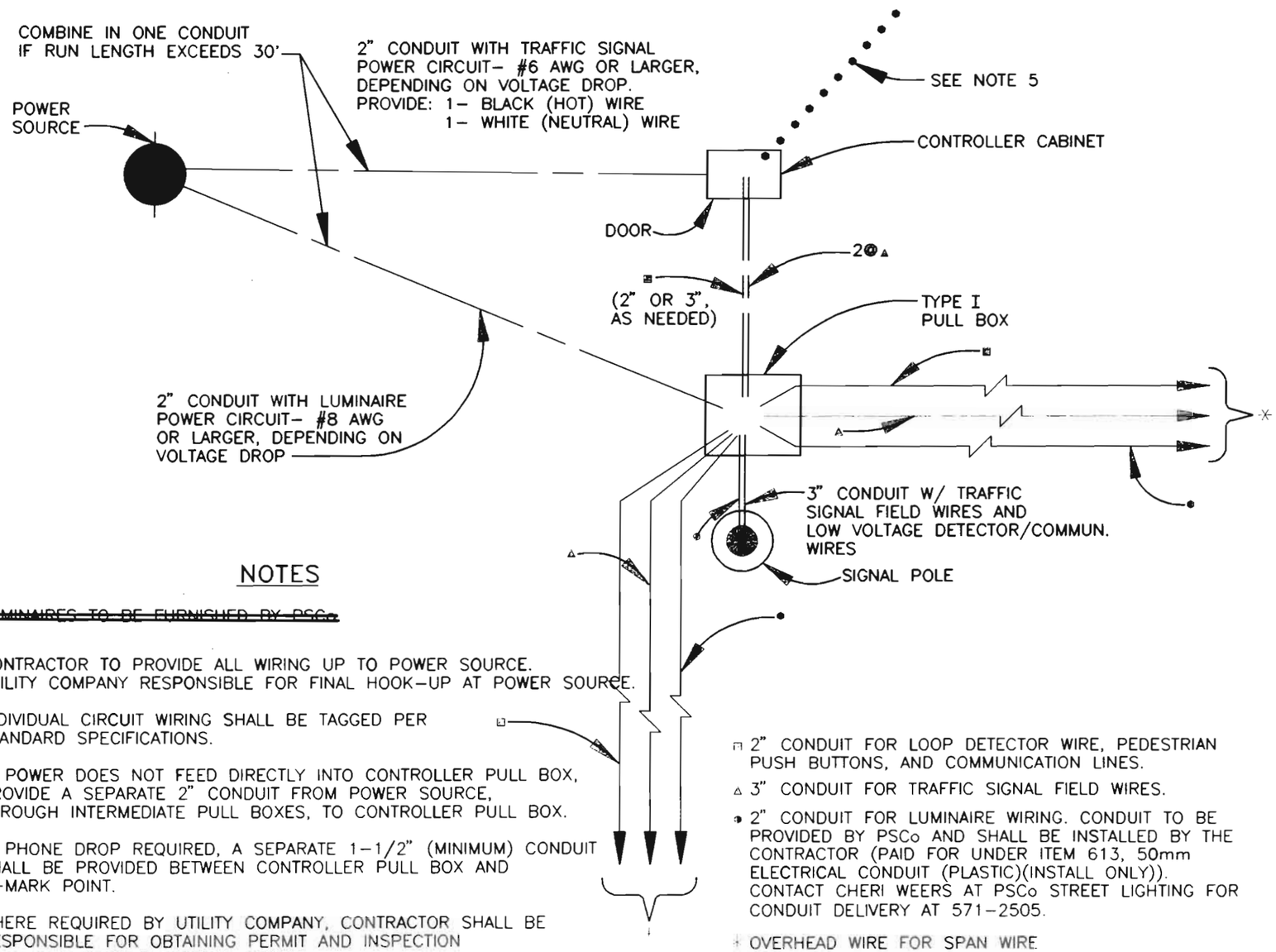

NOTES

~~1. LUMINAIRES TO BE FURNISHED BY PSCo.~~

2. CONTRACTOR TO PROVIDE ALL WIRING UP TO POWER SOURCE. UTILITY COMPANY RESPONSIBLE FOR FINAL HOOK–UP AT POWER SOURCE.
3. INDIVIDUAL CIRCUIT WIRING SHALL BE TAGGED PER STANDARD SPECIFICATIONS.
4. IF POWER DOES NOT FEED DIRECTLY INTO CONTROLLER PULL BOX, PROVIDE A SEPARATE 2" CONDUIT FROM POWER SOURCE, THROUGH INTERMEDIATE PULL BOXES, TO CONTROLLER PULL BOX.
5. IF PHONE DROP REQUIRED, A SEPARATE 1–1/2" (MINIMUM) CONDUIT SHALL BE PROVIDED BETWEEN CONTROLLER PULL BOX AND D–MARK POINT.
6. WHERE REQUIRED BY UTILITY COMPANY, CONTRACTOR SHALL BE RESPONSIBLE FOR OBTAINING PERMIT AND INSPECTION FROM THE STATE ELECTRICAL BOARD.

◘ 2" CONDUIT FOR LOOP DETECTOR WIRE, PEDESTRIAN PUSH BUTTONS, AND COMMUNICATION LINES.

▲ 3" CONDUIT FOR TRAFFIC SIGNAL FIELD WIRES.

● 2" CONDUIT FOR LUMINAIRE WIRING. CONDUIT TO BE PROVIDED BY PSCo AND SHALL BE INSTALLED BY THE CONTRACTOR (PAID FOR UNDER ITEM 613, 50mm ELECTRICAL CONDUIT (PLASTIC)(INSTALL ONLY)). CONTACT CHERI WEERS AT PSCo STREET LIGHTING FOR CONDUIT DELIVERY AT 571–2505.

+ OVERHEAD WIRE FOR SPAN WIRE INSTALLATION

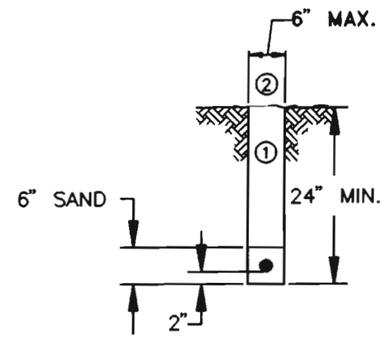

UNDER GRASS/GROUND TRENCHING DETAIL

NOTES

① BACKFILL AND TAMP WITH NATIVE MATERIAL TO MATCH COMPACTION OF SURROUNDING GROUND.
② RESEED OR RESOD SURFACE AT DIRECTION OF THE ENGINEER.

TS–10

DOUGLAS COUNTY
STANDARD SIGNAL DETAILS

UNDERGROUND POWER SCHEMATIC– SIGNALS / GROUND TRENCHING

ORIGINAL 6–93 10/16	DATE:	DESIGNED BY:	JOB NO.
	SCALE:	DRAWN BY:	SHEET NO. OF
REVISION DATE			

G:\95088\ACAD\PWR_SORC.dwg, 1"=1', 01/11/96 at 14:22

FEDERAL RD REGION NO.	DIVISION	PROJ. NO.	SHEET NO.	TOTAL SHEETS
VIII	COLORADO	CC 4701-082	149	

NOTES

① PROVIDE TYPE III PULL BOX/GROUND ROD AND 2" PVC CONDUIT ONLY IF D EXCEEDS 10'

② PROVIDE 2" GRC CONDUIT WITHOUT PULL BOX/GROUND ROD IF D IS LESS THAN 10'

③ MINIMUM CONDUIT DEPTHS:

UNDER GROUND	24"
UNDER PAVEMENT	30"

④ WHERE REQUIRED BY UTILITY COMPANY, CONTRACTOR SHALL BE RESPONSIBLE FOR OBTAINING PERMIT AND INSPECTION FROM THE STATE ELECTRICAL BOARD.

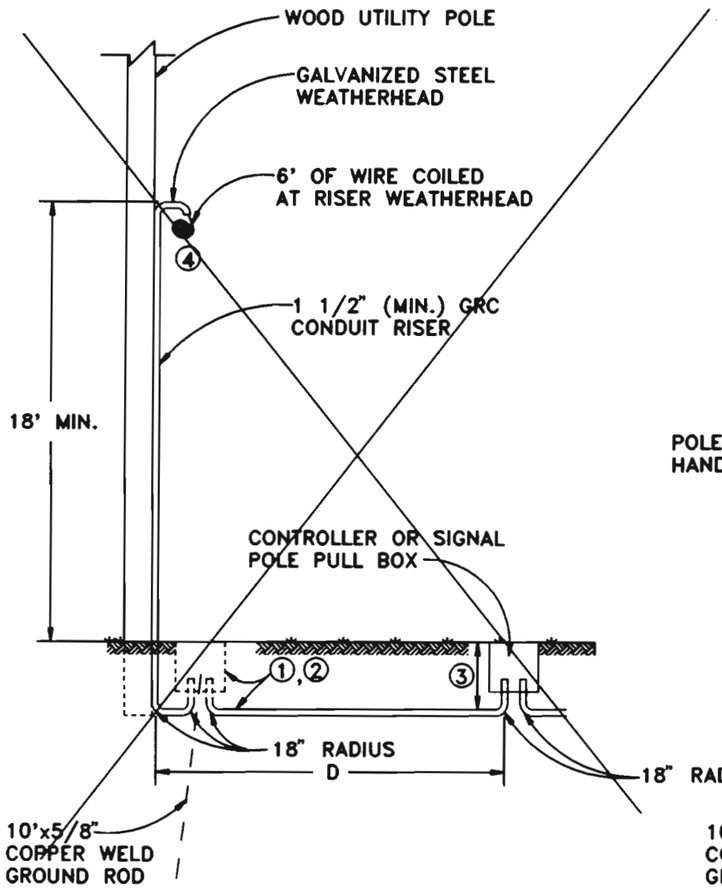

WITH WOOD UTILITY POLE

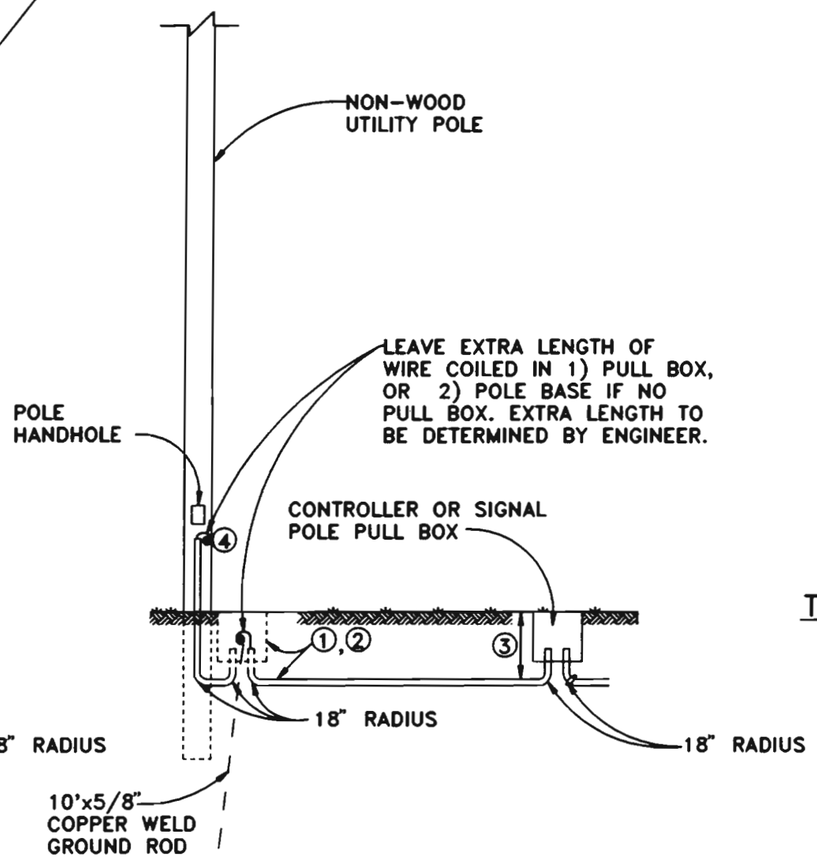

WITH NON-WOOD UTILITY POLE

TYPICAL UNDERGROUND POWER FEED FOR TRAFFIC SIGNALS AND SCHOOL FLASHING BEACON ASSEMBLIES

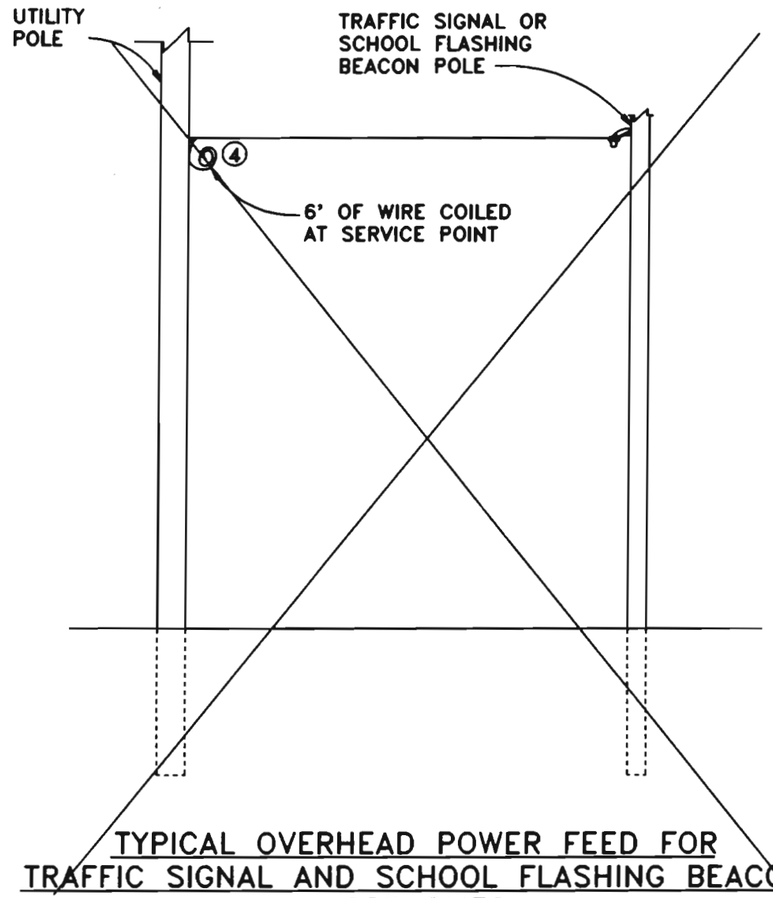

TYPICAL OVERHEAD POWER FEED FOR TRAFFIC SIGNAL AND SCHOOL FLASHING BEACON ASSEMBLIES

TS-11

DOUGLAS COUNTY
STANDARD SIGNAL DETAILS

UNDERGROUND POWER FEED
OVERHEAD POWER FEED

ORIGINAL 6-93 11/16	DATE:	DESIGNED BY:	JOB NO.
REVISION	DATE	SCALE: DRAWN BY:	SHEET NO. OF

D:\TPF.dwg, 1"=1', 08/16/93 at 11:08

AS CONSTRUCTED			
NO REVISIONS ☐	REVISED ☐	VOID ☐	

FEDERAL RD REGION NO.	DIVISION	PROJ. NO.	SHEET NO.	TOTAL SHEETS
VIII	COLORADO	CC 4701-082	150	

REVISIONS		

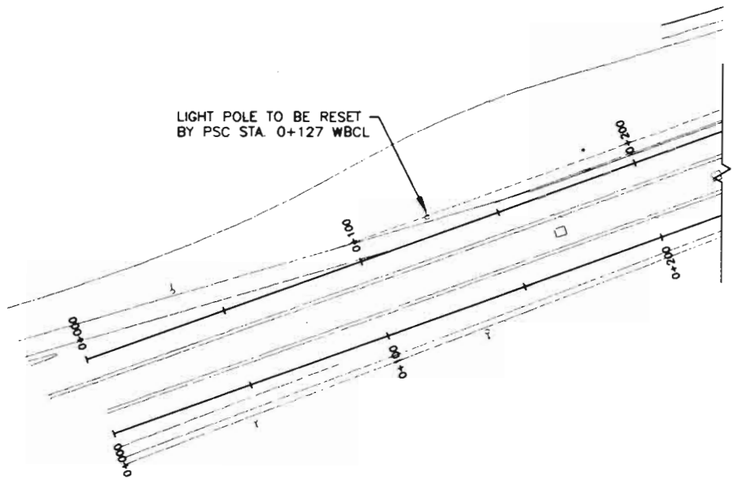

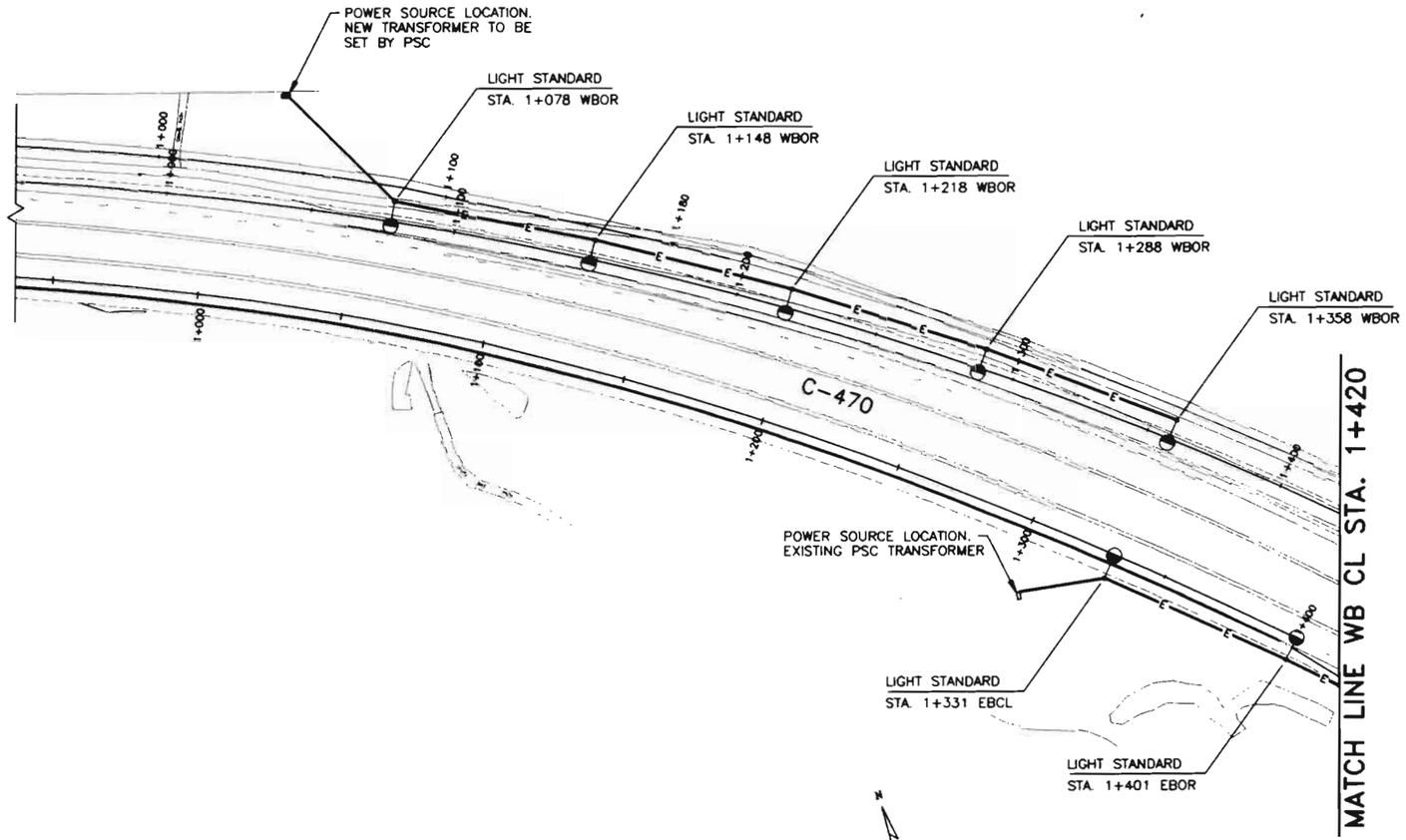

Original Scale 1:1000

LEGEND

CONVENTIONAL LUMINAIRE 400 W. HPS, 120 V. IN BOX BASED ENCLOSURE MOUNTED ON 12.2 m CIRCULAR STEEL POLES WITH BREAKAWAY BASE.

—E— DIRECT BURIAL CABLE

STATION	LIGHT STANDARD METAL (12.2 METER)	CONCRETE FOUNDATION PAD	LUMINAIRE HIGH PRESSURE SODIUM (400 WATT)	DIRECT BURIED CABLE	WIRING	RESET LIGHT STANDARDS *
	EACH	EACH	EACH	METER	LUMP SUM	EACH
0+127 WBCL						1
1+078 TO 1+358 WBOR	5	5	5	355		
1+331 TO 1+592 EBCL/EBOR	5	5	5	310		
PROJECT TOTAL	10	10	10	665	1	1

* FOR INFORMATION ONLY WORK BY PSC FORCES.

NOTES: WHOLE NUMBERS INDICATE MILLIMETERS
DECIMAL NUMBERS INDICATE METERS.

SEE M-613-1 FOR ADDITIONAL DETAILS

FELSBURG HOLT & ULLEVIG

C-470/YOSEMITE INTERCHANGE

LIGHTING PLAN
C-470 WBCL STA. 0+950 TO STA. 1+420

DATE	PROJECT NO	DESIGNED BY	DRAWN BY	CHECKED BY	SHEET NO.	OF	SHEETS	DRAWING NO.
FEB 96	95-088	DB	SS	DB	1	2		LP-1

COMPUTER GENERATED DRAWING DO NOT ALTER MANUALLY

AS CONSTRUCTED

NO REVISIONS ☐ REVISED ☐ VOID ☐

FEDERAL RD REGION NO.	DIVISION	PROJ. NO.	SHEET NO.	TOTAL SHEETS
VIII	COLORADO	CC 4701-082	151	

REVISIONS		

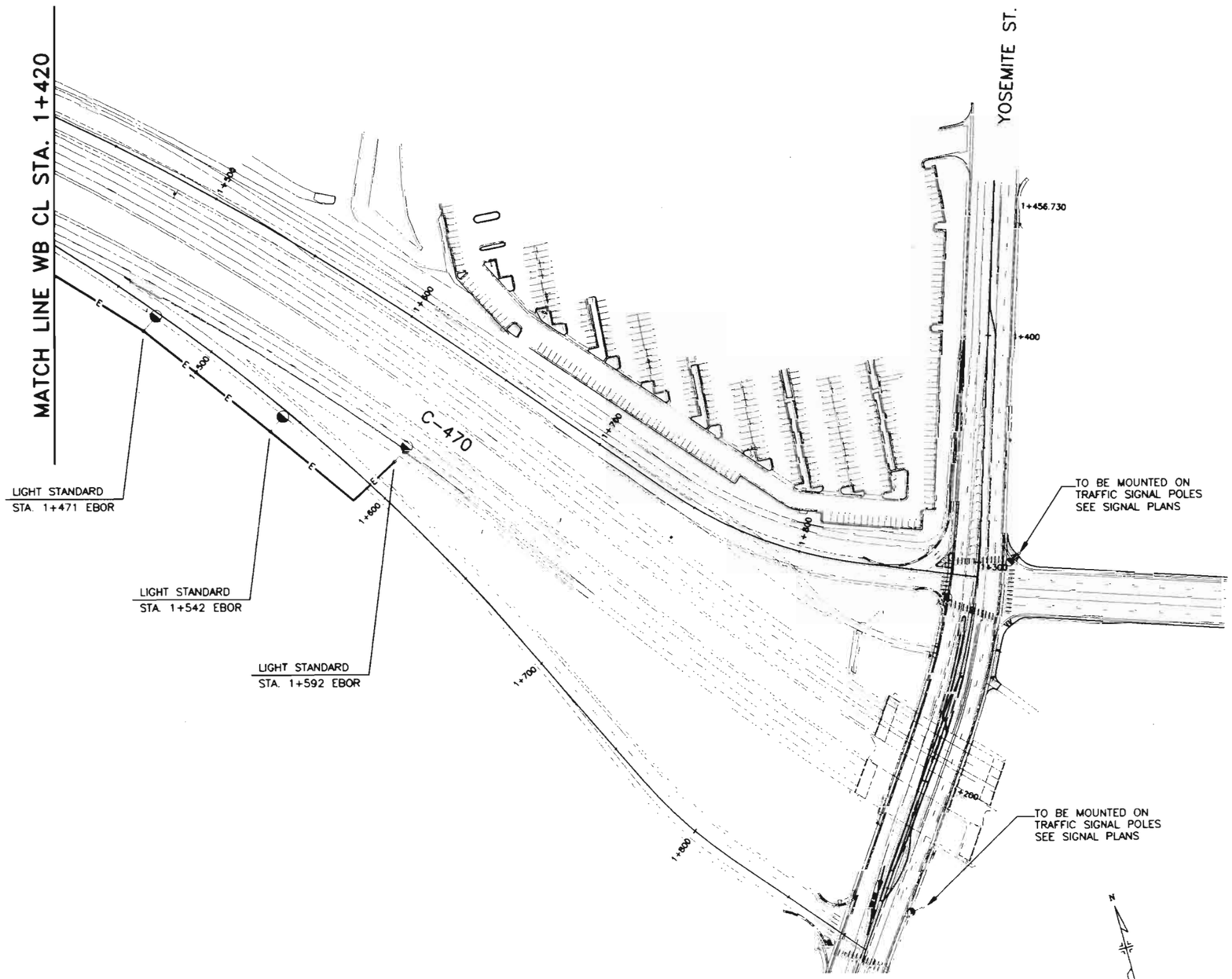

Original Scale 1:1000

NOTES: WHOLE NUMBERS INDICATE MILLIMETERS
DECIMAL NUMBERS INDICATE METERS.

SEE M-613-1 FOR ADDITIONAL DETAILS

FELSBURG HOLT & ULLEVIG

C-470/YOSEMITE INTERCHANGE

LIGHTING PLAN

C-470 WBCL STA. 1+420 TO STA. 1+878.735

DATE	PROJECT NO.	DESIGNED BY	SHEET NO. 2	DRAWING NO.
FEB 96	95-088	DRAWN BY SS	OF 2 SHEETS	LP-2
		CHECKED BY DB		

COMPUTER GENERATED DRAWING DO NOT ALTER MANUALLY

Colorado Department of Transportation

Staff Design: Ed Demming
4201 E. Arkansas
Denver, Colorado 80222
Phone: (303) 757-9083 FAX: (303) 757-9868

DESIGN DETAIL COLLECTION

Slotted Rail Terminal (SRT-350)

Designer:	E. Demming	Structure Numbers	
Detailer:	S. Smith		
Sheet Subset:	606-1	Subset Sheets:	1 of 1

Computer File Information				
Creation Date:	1/8/96	Initials:	SPS	R-
Last Modification Date:	2/8/96	Initials:	SPS	R-
Full Path:	HQ Common\Designd\606-1.dwg			R-
Drawing File Name:	606-1.dwg			R-
Acad Ver. R12	Scale:	Units: mm (Inches)		R-

Index of Revisions

Project No./Code	As Constructed
CC 4701-082	No Revisions:
	Revised:
Sheet Number 152 of	Void:

OFFSET NOTE:
THE POST OFFSET DIMENSIONS ARE GIVEN TO THE CENTER OF THE TRAFFIC FACE OF THE BLOCKOUTS, EXCEPT AT THE FIRST TWO POSTS, WHERE THE DIMENSION IS TO THE CENTER OF THE TRAFFIC FACE OF THE POST. OFFSET POINTS ARE TO BE LOCATED BY CHORD MEASUREMENTS AT THE BACK OF THE RAIL EQUAL TO THE NOMINAL POST SPACINGS SHOWN. POSTS ARE TO BE SET APPROXIMATELY RADIAL TO THE RAILING AT EACH POST LOCATION.

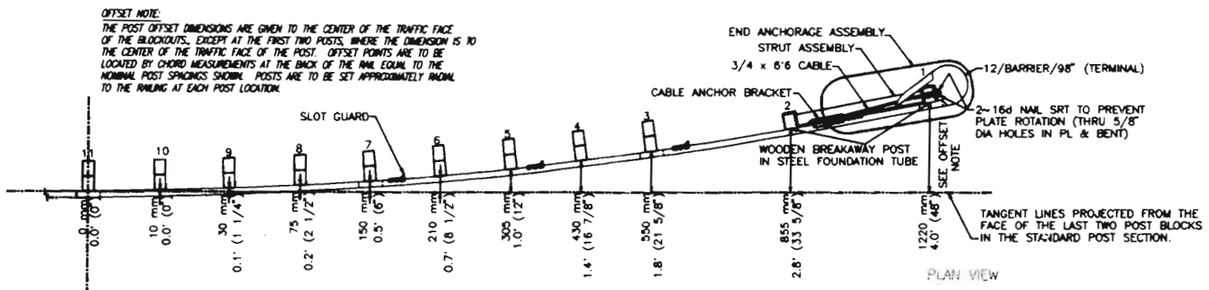

PLAN VIEW

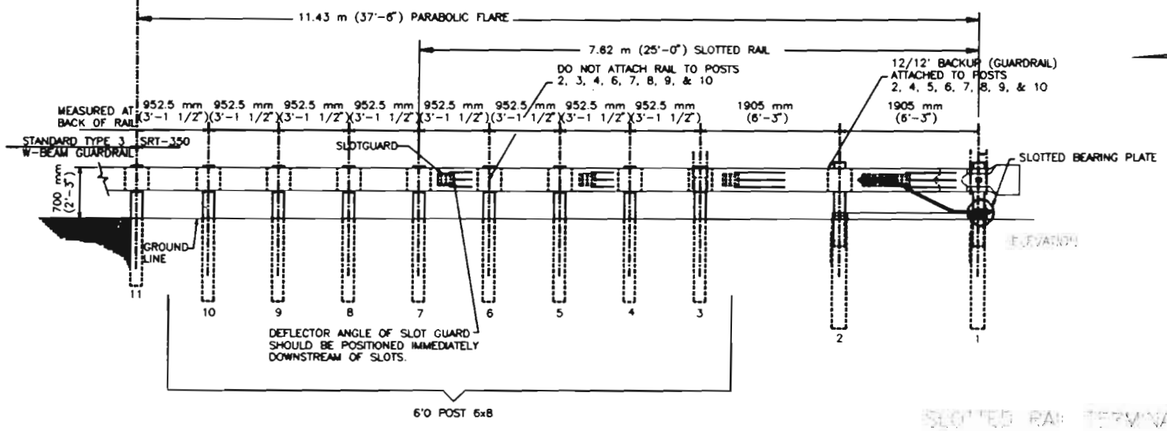

SLOTTED RAIL TERMINAL
Scale: 1:2000

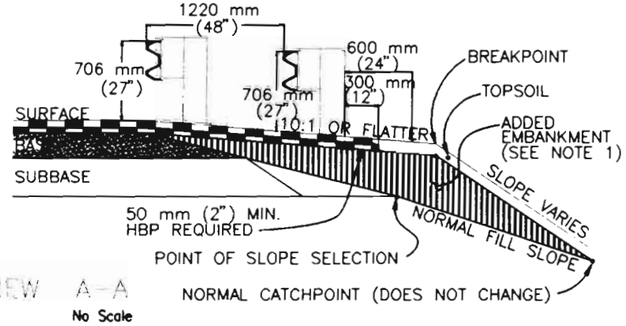

VIEW A-A
No Scale

NOTES

1. PAYMENT FOR THE ADDED EMBANKMENT (APPROXIMATELY 60 CU. YDS.) FOR THE FLARE SHALL BE AS FOLLOWS:
   - UNDER PAY ITEM 203 WHEN THE CONTRACT PLAN INCLUDES PAY ITEM 203.
   - INCLUDED IN THE COST OF END ANCHORAGE, TYPE SRT, ITEM 606 PAY ITEM WHEN THE CONTRACT PLAN DOES NOT INCLUDE PAY ITEM 203.
2. BEGIN STEEL POSTS, WHEN SPECIFIED AT POST #8.
3. SUPPLEMENTAL DELINEATION REQUIRED FOR BUFFER TERMINALS. SEE STANDARD PLAN S-612-1, SHEET 5 FOR DETAILS.

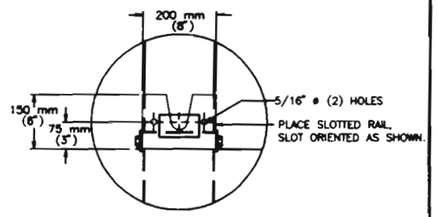

SLOTTED BEARING PLATE
Scale: 1:400

PLAN VIEW
END ANCHORAGE - SLOTTED RAIL TERMINAL
Scale: 1:2000

SLOTTED BEARING PLATE