AS CONSTRUCTED			
NO REVISIONS		REVISED	VOID

FEDERAL HIGHWAY REGION NO.	DIVISION	PROJ. NO.	SHEET NO.	TOTAL SHEETS
VIII	COLORADO	IXFU 470-1(9)	11	

REVISIONS			
R-6	8-21-84	Revised Pile Quantities and Shoulder Width	NGN
R-7	3-21-84	Revised Reinforcing Steel Quantity	NGN
R-8	3-19-84	Revised Span Lengths	NGN

BRIDGE STANDARD O

GENERAL NOTES

ALL WORK SHALL BE DONE ACCORDING TO THE STANDARD SPECIFICATIONS OF THE DIVISION OF HIGHWAYS, STATE OF COLORADO, APPLICABLE TO THE PROJECT.

FOR STRUCTURE NUMBER INSTALLATION, SEE STANDARD S-614-12.

FOR CONSTRUCTION DETAILS OF STRUCTURE EXCAVATION AND STRUCTURE BACKFILL, SEE STANDARD M-206-2.

EXPANSION JOINT MATERIAL SHALL MEET AASHTO SPECIFICATION M-213.

THE FOLLOWING STRUCTURAL STEEL SHALL BE AASHTO M-183 (ASTM A-36): BLOCKOUT RINGS.

CLASS 5 COLORED COATING FINISH WILL BE REQUIRED. THE COLOR WILL BE FROM THE FEDERAL STANDARD NO. 595A AND WILL BE RED SERIES NO. 31667 (TAN). THE COLOR WILL BE AS DIRECTED BY THE ENGINEER AND WILL BE SELECTED FROM TEST PANELS SUPPLIED BY THE CONTRACTOR.

GRADE 60 REINFORCING STEEL IS REQUIRED FOR #5 BARS AND LARGER. GRADE 40 MAY BE USED FOR #4 BARS.

THE FOLLOWING TABLE GIVES THE MINIMUM LAP SPLICE LENGTH FOR REINFORCING BARS:

BAR SIZE	#4	#5*	#6	#7	#8	#9	#10	#11
SPLICE LENGTH FOR CLASS "A" CONCRETE	1'-0"	1'-3"	1'-8"	2'-3"	3'-0"	3'-10"	4'-10"	5'-11"
SPLICE LENGTH FOR CLASS "D" AND CLASS "S" CONCRETE	1'-0"	1'-3"	1'-6"	2'-0"	2'-7"	3'-4"	4'-2"	5'-1"

APPLIED WIND LOADS AND EARTHQUAKE LOADS WERE NOT CONSIDERED IN ANALYZING THE STRUCTURE FOR STABILITY DURING THE CONSTRUCTION STAGES.

E.F. = EACH FACE
F.F. = FAR FACE
N.F. = NEAR FACE
E.C. = EPOXY COATED

	INITIAL	DATE
DESIGNED BY	R.K.H.	4/82
CHECKED BY	J.P.N.	4/82
DETAILED BY	R.O.	4/82
CHECKED BY	A.N.	3/82
QUANTITIES BY	P.J.	4/82
CHECKED BY	J.P.L.	4/82

SUMMARY OF QUANTITIES

	ITEM NO.	DESCRIPTION	UNIT	SUPER - STRUCTURE	ABUT 1	PIER 2	ABUT 3	TOTALS	AS CONST.
(1)	206	Structure Excavation	Cu. Yd.		425	525	355	1305	1305
	206	Structure Backfill (Class 1)	Cu. Yd.		245		245	490	490
	206	Structure Backfill (Class 2)	Cu. Yd.			360		360	360
	403	Hot Bituminous Pavement (GR EX) (H SA)	Ton	177				177	197.85
	502	Drilling Hole to facilitate Pile Driving	Lin. Ft.		112		112	224	225
	502	Steel Piling (HP 12x74)	Lin. Ft.		124		102	226	272
	507	Concrete Slope and Ditch Paving (Reinf.)	Cu. Yd.		50		56	106	97.72
	509	Structural Steel	Lb.	397				397	397
	515	Waterproofing (Membrane)	Sq. Yd.	1551				1551	1551
	518	Bridge Compression Joint Sealer	Lin. Ft.		23		23	46	28
	601	Concrete Class A (Bridge)	Cu. Yd.		55	164	55	274	274.00
	601	Concrete Class D (Bridge)	Cu. Yd.	1,018	51		51	1,120	1116.81
	602	Reinforcing Steel	Lb.	(R-8) ~~118,650~~ 840	6,075	20,495	6,075	(R-8) ~~151,295~~ 485	151,485
	602	Reinforcing Steel (Epoxy Coated)	Lb.	62,170	3,400		3,400	68,970	68970
	607	Fence Chain Link (Special)	Lin. Ft.	294				294	295
	613	3/4 inch Electrical Conduit	Lin. Ft.	100				100	81
	613	1½ inch Electrical Conduit	Lin. Ft.	300				300	300
(2)	613	Conduit (Install Only) - Reimbursable	Lin. Ft.	700				700	708
	618	Prestressing Steel Wire and Strand	Lb.	~~(R-8) 42,273~~ 46,320				~~(R-8) 42,273~~ 46,320	46,320
	626	Mobilization	L.S.					0.2	0.2

(1) Includes 104 Cu. Yd Structure Excavation for Concrete Slope and Ditch Paving, 501 Cu. Yds. for Abutment 1 and 53.9 Cu. Yd. for Abutment 2

(2) Non-Federal Aid - Reimbursable

INDEX OF DRAWINGS

DWG. NO. B 1	GENERAL INFORMATION - SUMMARY OF QUANTITIES
DWG. NO. B 2	GENERAL LAYOUT
DWG. NO. B 3	ENGINEERING GEOLOGY
DWG. NO. B 4	CONSTRUCTION LAYOUT - PILING AND FOOTING LAYOUT
DWG. NO. B 5	ABUTMENT 1 DETAILS
DWG. NO. B 6	ABUTMENT 3 DETAILS
DWG. NO. B 7	WINGWALL DETAILS - TYPICAL ABUTMENT SECTION
DWG. NO. B 8	WINGWALL DETAILS
DWG. NO. B 9	PIER DETAILS
DWG. NO. B 10	PIER SECTIONS
DWG. NO. B 11	SUPERSTRUCTURE DETAILS
DWG. NO. B 12	SUPERSTRUCTURE DETAILS
DWG. NO. B 13	CAST-IN-PLACE PRESTRESSED GIRDER DETAILS
DWG. NO. B 14	BOX GIRDER DETAILS
DWG. NO. B 15	RAIL DETAILS
DWG. NO. B 16	FENCE CHAIN LINK (SPECIAL)
DWG. NO. B 17	SLOPE PAVING DETAILS
DWG. NO. B 18	BRIDGE DECK ELEVATIONS
DWG. NO. B 19	BRIDGE DECK ELEVATIONS
DWG. NO. B 20	ROADWAY APPROACHES

DESIGN DATA:

CURRENT AASHTO DESIGN SPECIFICATIONS.

LIVE LOAD: AASHTO HS-20-44 OR INTERSTATE ALTERNATE
DEAD LOAD: ASSUMES 48 LBS. PER SQ. FT. FOR BITUMINOUS PAVEMENT

REINFORCED CONCRETE:

CLASS A CONCRETE: f_c = 1,200 psi n = 9
CLASS D CONCRETE: f_c = 1,500 psi n = 8

REINFORCING STEEL: #4 BARS fs = 20,000 psi
#5 BARS AND LARGER fs = 24,000 psi

EXCEPT FOR TRANSVERSE DECK SLAB BETWEEN GIRDERS fs = 20,000 psi

STRUCTURAL STEEL: AASHTO M-183 (ASTM A 36) fs = 20,000 psi

PRESTRESSED CONCRETE: f'_s = 270,000 psi
f'_c = (See Details)

REQUIREMENTS FOR THE ELECTRICAL CONDUIT IN STRUCTURE F-17-HR ARE AS FOLLOWS:

TWO SIX-INCH DIAMETER CONDUITS AND ONE FOUR-INCH DIAMETER CONDUIT WILL BE LOCATED WITHIN THE FIRST INTERIOR BAY ON THE EAST SIDE OF THE STRUCTURE AS TELEPHONE CONDUITS WILL OCCUPY THE EXTERIOR BAY ON THIS SIDE.

ALL CONDUIT WITHIN THE BRIDGE WILL BE PVC TYPE DB (NEMA PUBLICATION NO. TC6).

THE SIX-INCH DIAMETER CONDUITS WILL BE SPACED THREE FEET APART WITH THE FOUR-INCH CONDUIT CENTERED BETWEEN THEM. THIS CONFIGURATION WILL SATISFY THE HEAT BUILD UP CONSIDERATIONS AND WILL RESULT IN MINIMUM CONFLICTS WITH STRUCTURE REINFORCING STEEL.

THE PLANS WILL SHOW THE LOCATIONS FOR THE BLOCKOUTS AT THE ABUTMENTS, INTERMEDIATE DIAPHRAGMS, AND AT THE PIER. THE BLOCKOUTS WILL BE FORMED WITH EIGHT-INCH DIAMETER PIPE FOR SIX-INCH CONDUITS AND SIX-INCH DIAMETER PIPE FOR FOUR-INCH CONDUIT.

TWO INTERMEDIATE SUPPORTS WILL BE PROVIDED FOR EACH CONDUIT SPAN BETWEEN BLOCKOUT LOCATIONS. THESE SUPPORTS WILL CONSIST OF A LENGTH OF UNISTRUT PLACED ACROSS THE ENTIRE BOTTOM SLAB WITHIN THE CONDUIT BAY. THE CONDUITS WILL THEN BE HELD TO THE UNISTRUT WITH BOLTED BANDS. DUE TO THE LATERAL RESTRAINT PROVIDED AT THE BLOCKOUT LOCATIONS, THE UNISTRUT WILL NOT BE ATTACHED TO THE SLAB.

THE CONTRACTOR WILL FURNISH AND INSTALL THE SLEEVES REQUIRED TO FORM THE BLOCKOUTS AS PART OF THE WORK. PUBLIC SERVICE COMPANY WILL FURNISH ALL OTHER MATERIALS, I.E., CONDUIT, UNISTRUT SUPPORTS AND BANDS, AND OTHER HARDWARE AS MAY BE REQUIRED. THE CONTRACTOR WILL INSTALL THE MATERIAL AS DIRECTED ON A FORCE ACCOUNT BASIS WHICH WILL BE PAID BY PUBLIC SERVICE COMPANY.

IF YOU SHOULD REQUIRE ADDITIONAL INFORMATION OR FURTHER ASSISTANCE, CONTACT ENGINEER IS MR. VINCE MARKER, TELEPHONE NUMBER 571-3053.

B — CROSS REFERENCE DRAWING NUMBER
— SECTION OR DETAIL IDENTIFICATION

BRIDGE DESCRIPTION

TWO SPANS (118'-0", 112'-0")
CONTINUOUS POST-TENSIONED CONCRETE BOX GIRDER BRIDGE

DANIEL PARK ROAD OVER S.H. 470
60'-0" ROADWAY CURB-TO-CURB 69° 43' 02" SKEW
1'-9" RAIL LEFT SIDE; 5'-0" WIDE SIDEWALK
WITH 1'-7" RAIL RIGHT SIDE

REVIEWED
46 Lowry 7-2-85

DIVISION OF HIGHWAYS

GENERAL INFORMATION
SUMMARY OF QUANTITIES

Station 8+80.67 to 11+39.33
Station DANIELS PARK ROAD OVER S.H. 470
Near LITTLETON Sec. 1/2 T 5S R 67 W
Designed R. MC Structure F-17-HR
Detailed L. MANNING Numbers
Drawing Number B 1 of 20 Drawings

(11-1-79)

STATE OF COLORADO
DEPARTMENT OF HIGHWAYS
DIVISION OF HIGHWAYS
DOH FORM NO. 117
REV. MAR. 1977

AS CONSTRUCTED			
NO REVISIONS		REVISED 7-11-85	VOID

FEDERAL ROAD REGULATION NO.	DIVISION	PROJ. NO.	SHEET NO.	TOTAL SHEETS
VIII	COLORADO	IXFU470-1(9)	12	

	REVISIONS		
R-1	3-19-84	REVISED STA. & LENGTHS	NGN
R-2	3-19-84	REVISED STA., ELEV. & ANGLE	NGN
R-4	3-19-84	ADDED NOTES	NGN

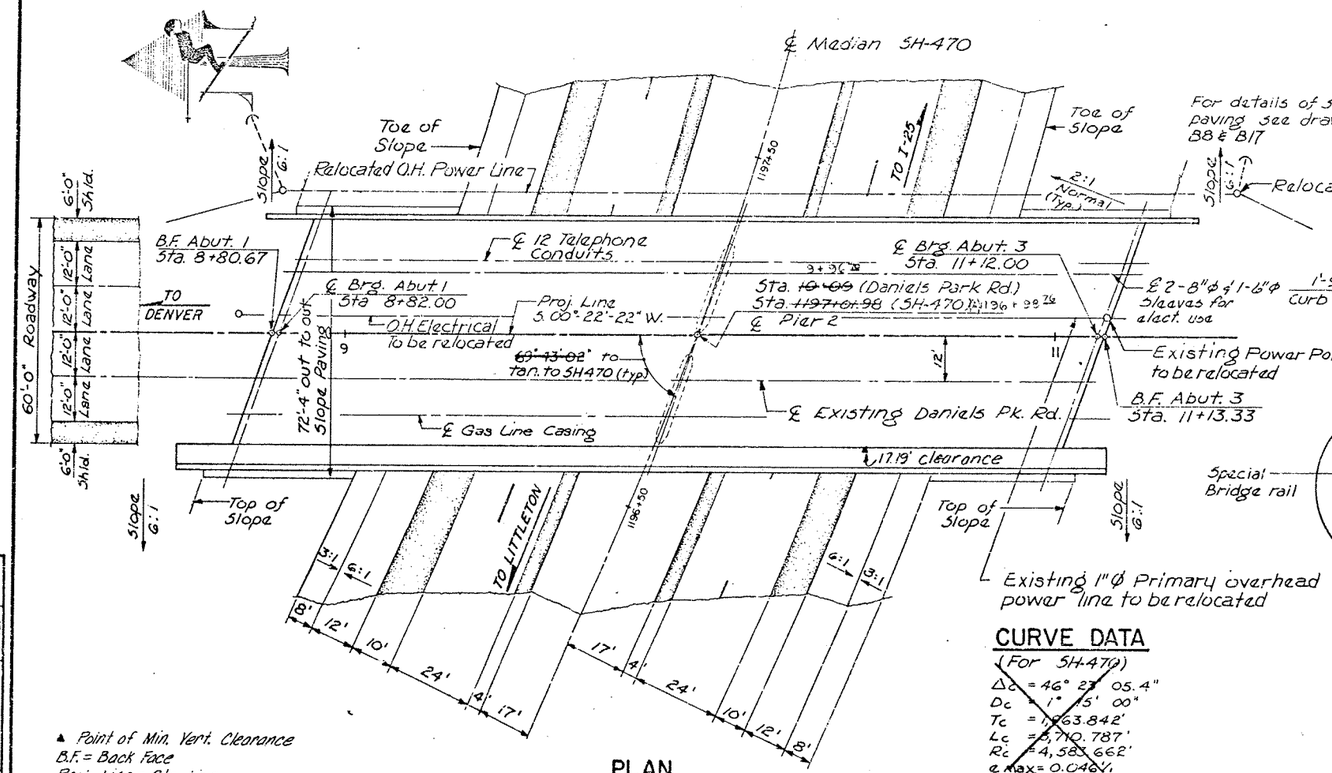

▲ Point of Min. Vert. Clearance
B.F. = Back Face
Proj. Line = Sta. Line
* Elevations taken at finished grade

PLAN

CURVE DATA

(For SH-470)

Δc = 46° 23' 05.4"
Dc = 1° 5' 00"
Tc = 1,963.842'
Lc = 3,710.787'
Rc = 4,583.662'
e max = 0.04 ft/ft

(R-4) NOTE REALIGNMENT OF SH-470 DUE TO SHIFTING OF PIER. TO BE REVISED BY CDH.

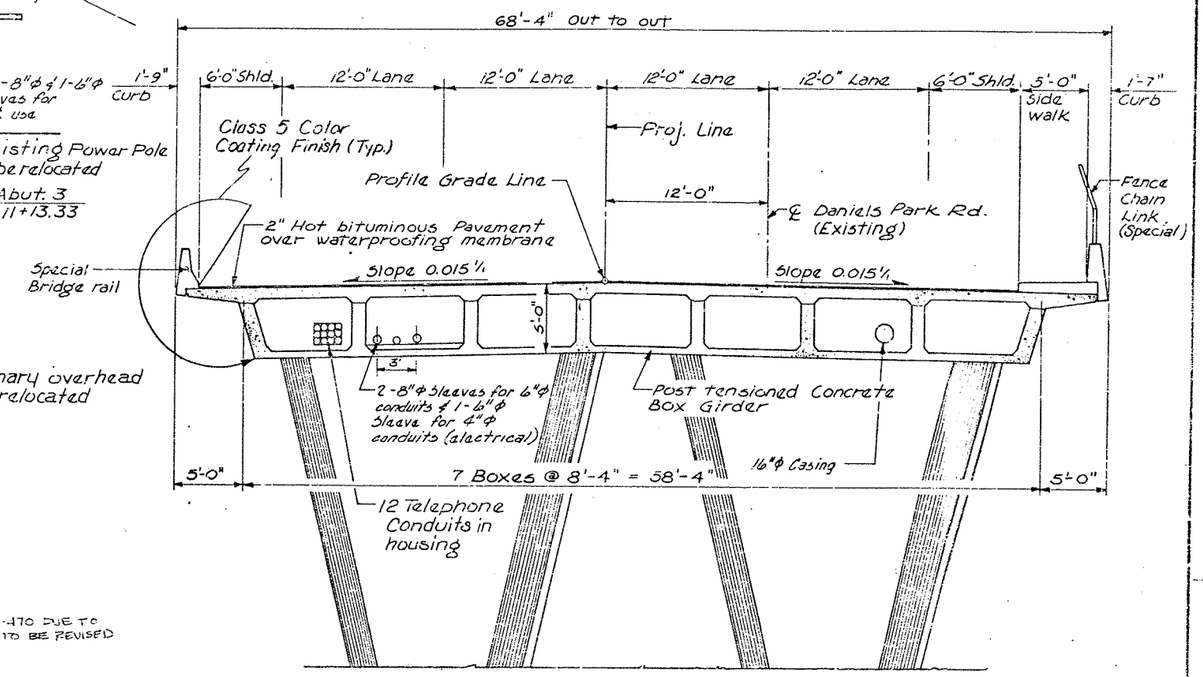

TYPICAL SECTION

Section taken normal to Proj. Line
Looking South

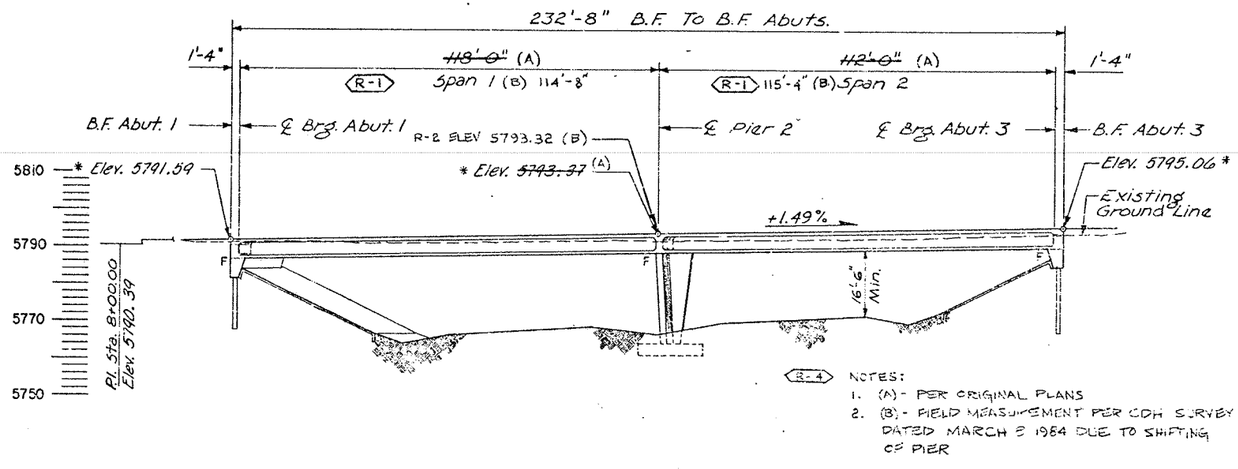

(R-4) NOTES:
1. (A) - PER ORIGINAL PLANS
2. (B) - FIELD MEASUREMENT PER CDH SURVEY DATED MARCH 2 1984 DUE TO SHIFTING OF PIER

SECTION

Section taken at Proj. Line

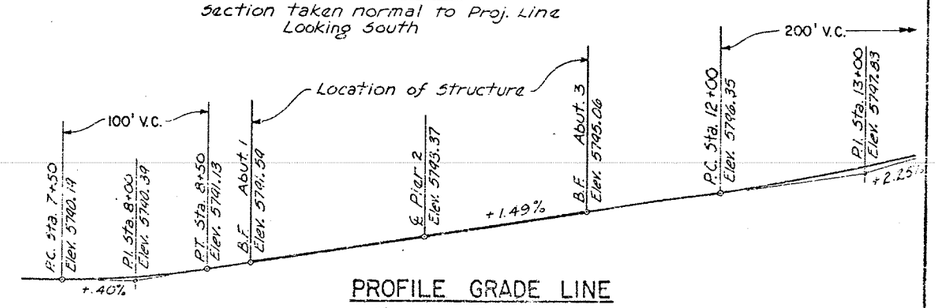

PROFILE GRADE LINE

Shown at Proj. Line *

Live Loading : HS 20-44 & Interstate Alternate

NOTES

TELEPHONE CONDUITS AND MOUNTING HARDWARE TO BE FURNISHED BY MOUNTAIN BELL. THE CONTRACTOR SHALL COORDINATE THIS WORK WITH MOUNTAIN BELL.

ELECTRICAL CONDUIT (PLASTIC) AND MOUNTING HARDWARE TO BE FURNISHED BY PUBLIC SERVICE COMPANY AND INSTALLED BY THE CONTRACTOR. THE CONTRACTOR SHALL NOTIFY PUBLIC SERVICE COMPANY AND ARRANGE FOR INSPECTION OF THE PLACEMENT OF THE CONDUIT BEFORE POURING THE TOP SLAB. ALL WORK REQUIRED SHALL BE INCLUDED IN THE BID PRICE FOR ITEM 613 CONDUIT (INSTALL ONLY) (NON-FEDERAL AID). PUBLIC SERVICE COMPANY SHALL REIMBURSE THE DIVISION OF HIGHWAYS FOR THIS WORK. 6" DIAMETER AND 8" DIAMETER PIPE SLEEVES SHALL BE FURNISHED BY THE CONTRACTOR AND INCLUDED IN THE WORK.

16" DIAMETER GAS LINE CASING TO BE FURNISHED AND INSTALLED BY PUBLIC SERVICE COMPANY. THE CONTRACTOR SHALL COORDINATE THIS WORK WITH PUBLIC SERVICE COMPANY.

VOIDS AT ABUTMENTS, SLEEVES AND ELECTRICAL CONDUITS SHALL BE PACKED WITH GARDN AND SEALED WITH MASTIC BY CONTRACTOR

VOID AT ABUTMENTS BETWEEN BLOCKOUT RING AND CASING TO BE SEALED BY PUBLIC SERVICE COMPANY AS DIRECTED BY THE ENGINEER.

	INITIAL	DATE			A.M.	4/82
DESIGNED BY	R.K.M.	4/82	CHECKED BY			
CHECKED BY	J.M.N.	4/82	QUANTITIES BY		P.J.	4/82
DETAILED BY	R.D.	4/82	CHECKED BY		J.P.L.	4/82

DIVISION OF HIGHWAYS

GENERAL LAYOUT

DANIELS PARK ROAD
OVER S.H. 470

Designer	K. Kelley	Structure Numbers	F-17-HR
Detailer	D. Doherty		
Drawing number B2		of 20 Drawings	

Revision Dates			City and County

DOH FORM NO. 160
REVISED: JANUARY 1979

FED. ROAD REG. NO.	DIVISION	PROJECT NO.	SHEET NO.	TOTAL SHEETS
VIII	COLORADO	IXFU 470-1(9)	13	

AS CONSTRUCTED

NO REVISIONS 7-11-75 REVISED VOID

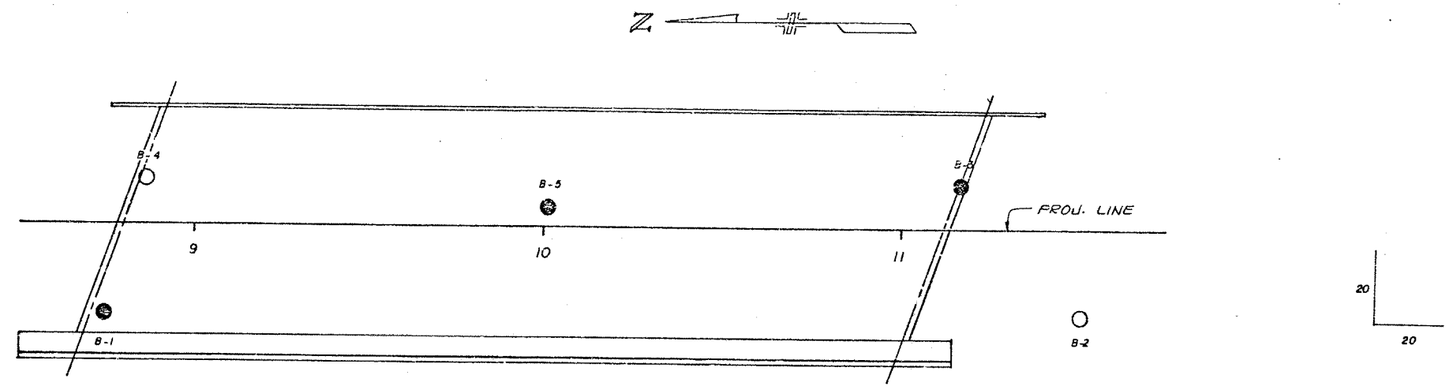

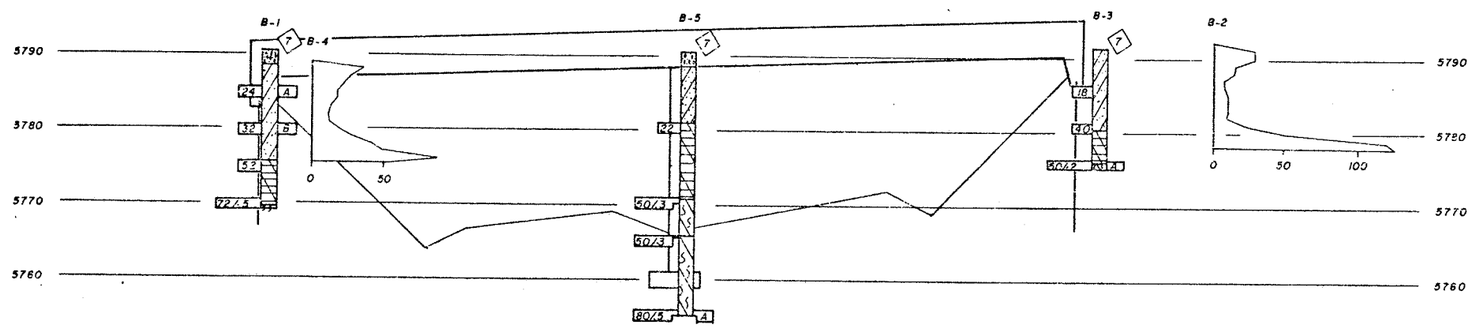

SUMMARY OF TEST RESULTS

Sample No.	Depth	Classification: Corps of Engrs. or Visual	Classification: AASHTO	Grading Analysis, Percent: Gravel	Coarse Sand	Fine Sand	Silt and Clay	Atterberg Limits: Liquid Limit L_{ss}	Plastic Limit P_{ss}	Plastic Index I_{ss}	Water Cont. W %	Wet Unit Weight γ P.C.F.	Unconfined Strength Q_u T.S.F.	Triaxial Shear Strength: φ	C P.S.I.	Dia. of Sample (Inches)
1A	4.8'-6.3'	Sandy Clay	A-7-6(24)	2	7	13	79	49	18	31	19.2					
1B	9.8'-11.3'	Clay	A-7-6(33)	0	1	9	90	56	23	33	22.1					
3A	15.5'-16.2'	Clayey Sand	A-4(0)	1	13	50	36	29	19	10	13.2					
5A	34.5'-35.5'	Silty Sand	A-1-6(0)	10	45	27	18	NV	NP	NP	16.4					

TYPE OF MATERIAL

- SAND & GRAVEL
- SANDY CLAY
- CLAYEY SHALE
- CLAYEY SANDSTONE

LEGEND

TEST BORING

3" Hole Size
Blows Per Foot 30
1-A Sample No.
Water Table 2/16/79
Core Recovery 50
RQD 25
* Standard Penetration Test (AASHTO T 206-74)

CONTINUOUS PENETRATION TEST

A Type of Test
A. Dutch Cone Penetrometer
B. 2 in. Dia. Drive Point 30 in. Free Fall 140 Lb. Hammer
0 50 100
KG/CM² (Ø) Q (P) Fs (B)

Location of Test Boring
Location of Continuous Penetration Test
Rotary Boring
Auger Boring

DIVISION OF HIGHWAYS

ENGINEERING GEOLOGY

Daniel Park Rd.

Designed by LSB
Drawn by PM
Checked by GCP
Date 10 NOV 81

STRUCTURE NO. F-17-NR
DWG. NO. 83 OF 90

STATE OF COLORADO
DEPARTMENT OF HIGHWAYS
DIVISION OF HIGHWAYS
DOH FORM NO. 117
REV. MAR. 1977

AS CONSTRUCTED			
NO REVISIONS		REVISED	7-11-85
VOID			

FEDERAL ROAD REGION NO.	DIVISION	PROJ. NO.	SHEET NO.	TOTAL SHEETS
VII	COLORADO	IXFU-470-1(9)	14	

	REVISIONS		
R-1	3-19-84	REVISED SPAN LENGTH	NGN
R-2	3-19-84	REVISED STA. ELEV. & ANGLE	NGN
R-3	3-19-84	ADDED EAST & WEST FACE PIER	NGN

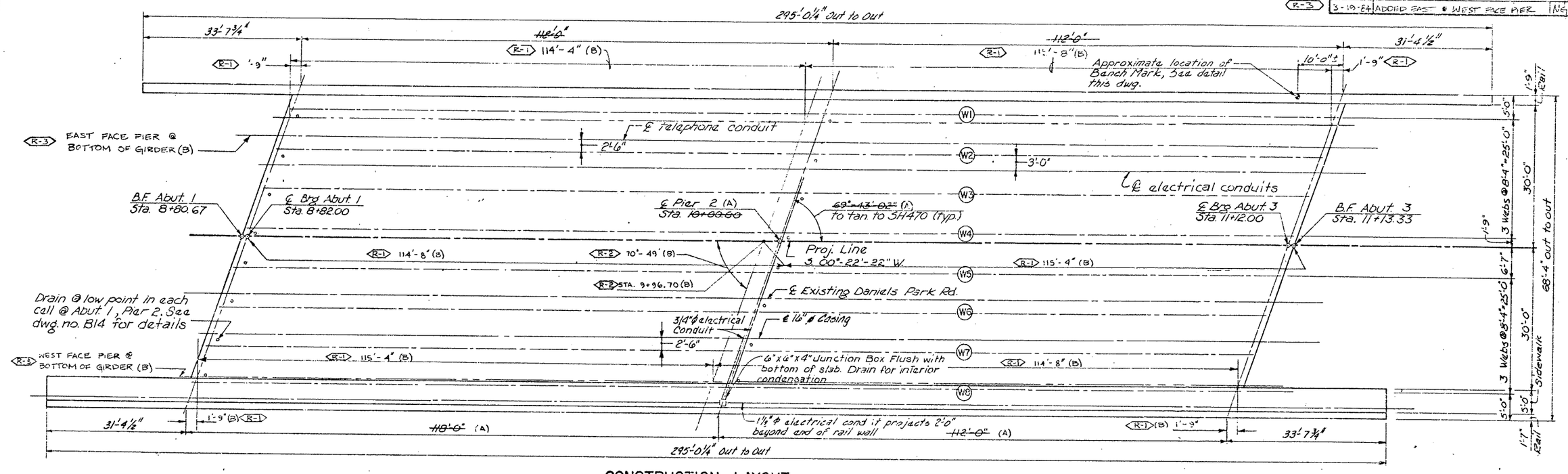

CONSTRUCTION LAYOUT

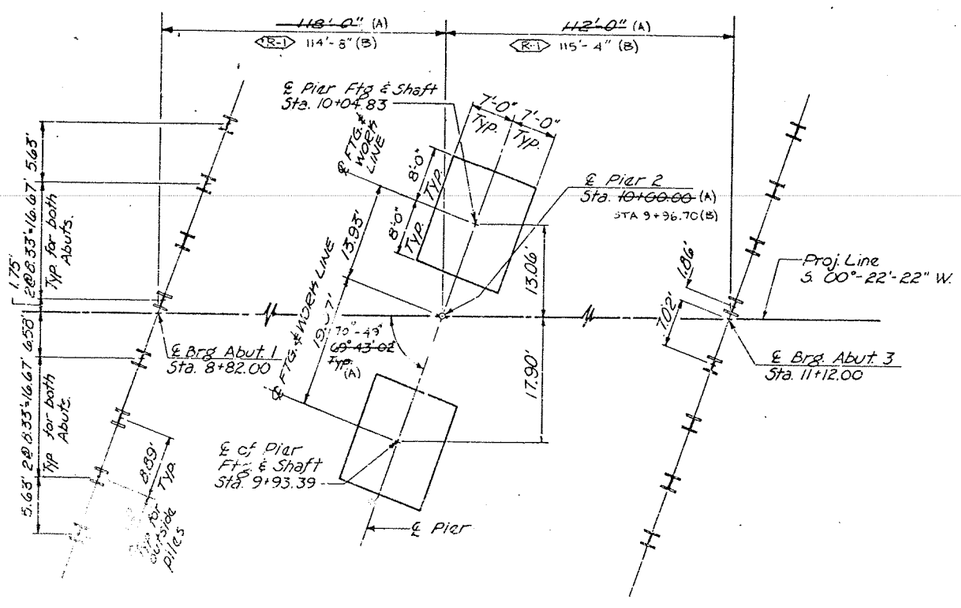

FOOTING & PILING LAYOUT

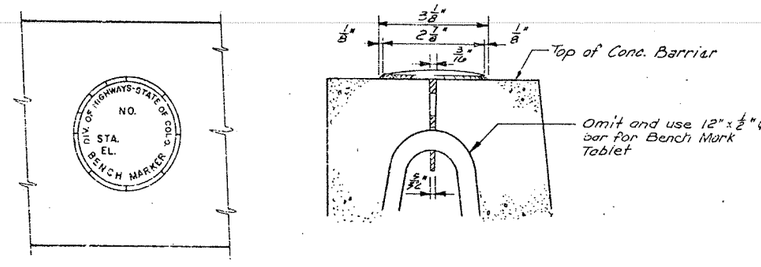

DETAIL OF BRONZE TABLET FOR BENCH MARK

NOTES

1) DIMENSIONS ARE AT BOTTOM OF CONCRETE
2) ALL PILING SHALL BE HP12x74, END BEARING
3) ESTIMATED PILE TIP ELEVATIONS:
   ABUTMENT 1 = 5767.0
   ABUTMENT 3 = 5773.0
4) PILING SHALL BE PLACED IN 15 INCH DIAMETER DRILLED HOLES 14 FEET DEEP - FILL HOLES WITH BENTONITE SLURRY BEFORE PILING IS DRIVEN (INCLUDED IN WORK)
5) MAXIMUM PILE LOAD:
   ABUTMENT 1 = 99.2 TONS
   ABUTMENT 3 = 94.6 TONS
6) ALL PILING SHALL BE INSTALLED VERTICAL
7) PIER FOOTING PRESSURE = 7.1 TONS PER SQUARE FOOT

INITIAL	DATE			
R.K.M.	4/82	DESIGNED BY	CHECKED BY	A.M. 4/82
J.M.N.	4/82	CHECKED BY	QUANTITIES BY	R.J. 4/82
D.L.D.	4/82	DETAILED BY	CHECKED BY	J.L.P. 4/82

DIVISION OF HIGHWAYS

CONSTRUCTION LAYOUT AND PILING & FOOTING LAYOUT

DANIELS PARK ROAD OVER SH 470

Designer	R. Moy	Structure Numbers	F-17-HR
Detailer	A. Dougherty		
Drawing Number B4		of 22	Drawings

STATE OF COLORADO
DEPARTMENT OF HIGHWAYS
DIVISION OF HIGHWAYS
DOH FORM NO. 117
REV. MAR. 1977

AS CONSTRUCTED			
NO REVISIONS	7-11-83	REVISED	VOID

FEDERAL ROAD REGION NO.	DIVISION	PROJ. NO.	SHEET NO.	TOTAL SHEETS
VIII	COLORADO	IXFU 470-1(31)	15	

REVISIONS		

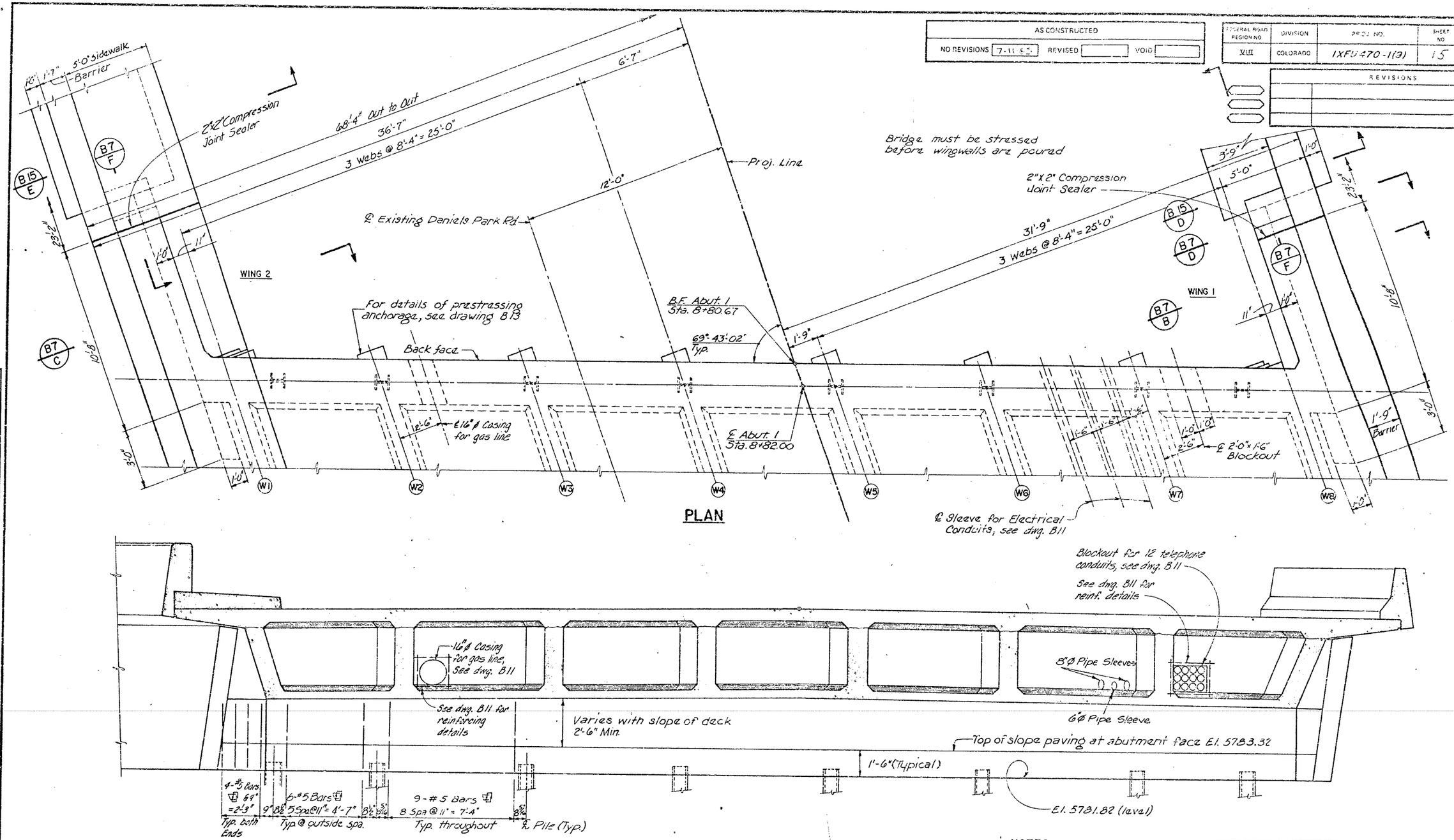

PLAN

ELEVATION

NOTES

For Typical Abutment Section and Wingwall Details, see drawings B7 and B8.

For Bending Details of Reinf. Steel in Abutments, see drawing B7.

For Piling Layout, see drawing B4.

INITIAL	DATE		INITIAL	DATE
DESIGNED BY	R.K.M.	4/82	CHECKED BY	A.M. 4/82
CHECKED BY	J.M.N.	4/82	QUANTITIES BY	P.J. 4/82
DETAILED BY	D.L.D.	4/82	CHECKED BY	J.P.L. 4/82

DIVISION OF HIGHWAYS

ABUTMENT 1 DETAILS

DANIELS PARK ROAD
OVER SH 470

Designer	R. Kloy	Structure Numbers	F-17-HR
Detailer	J. Dougherty		
Drawing Number B6		of 23	Drawings

STATE OF COLORADO
DEPARTMENT OF HIGHWAYS
DIVISION OF HIGHWAYS
DOH FORM NO. 117
REV. MAR. 1971

AS CONSTRUCTED			
NO REVISIONS	7-11-83	REVISED	VOID

FEDERAL ROAD REGION NO.	DIVISION	PROJ. NO.	SHEET NO.	TOTAL SHEETS
VIII	COLORADO	IXFU 470-1(9)	16	

REVISIONS		

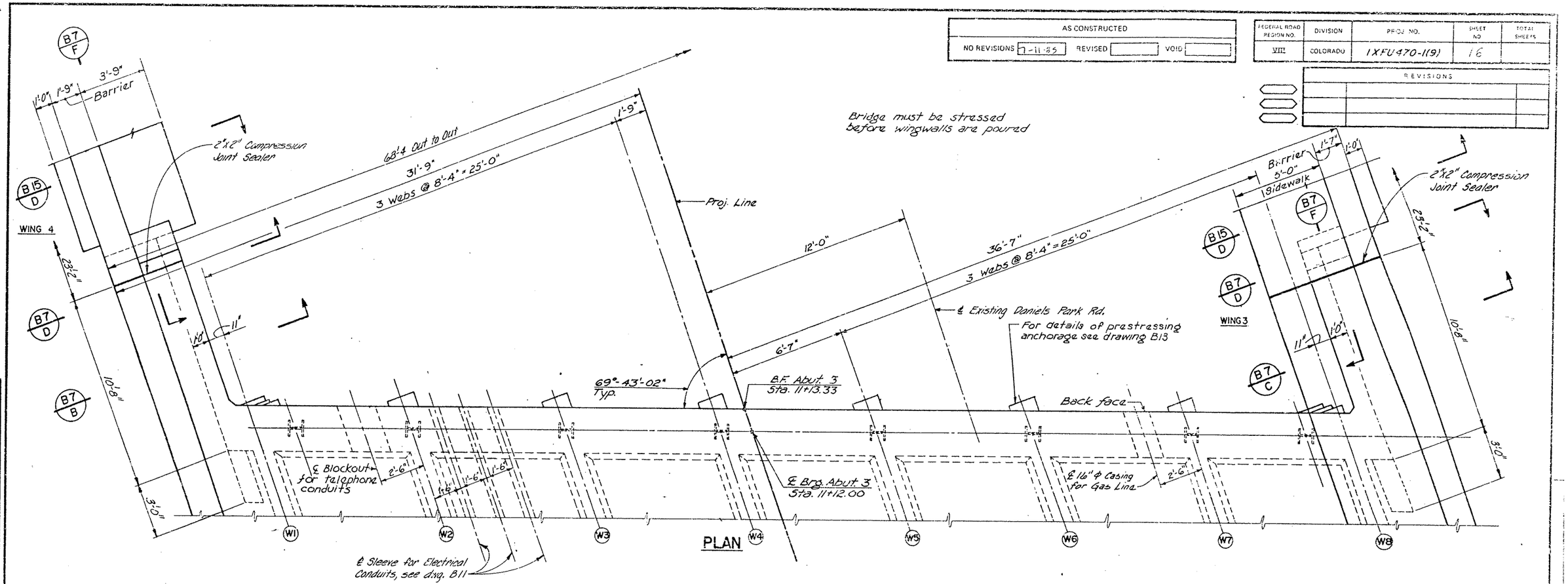

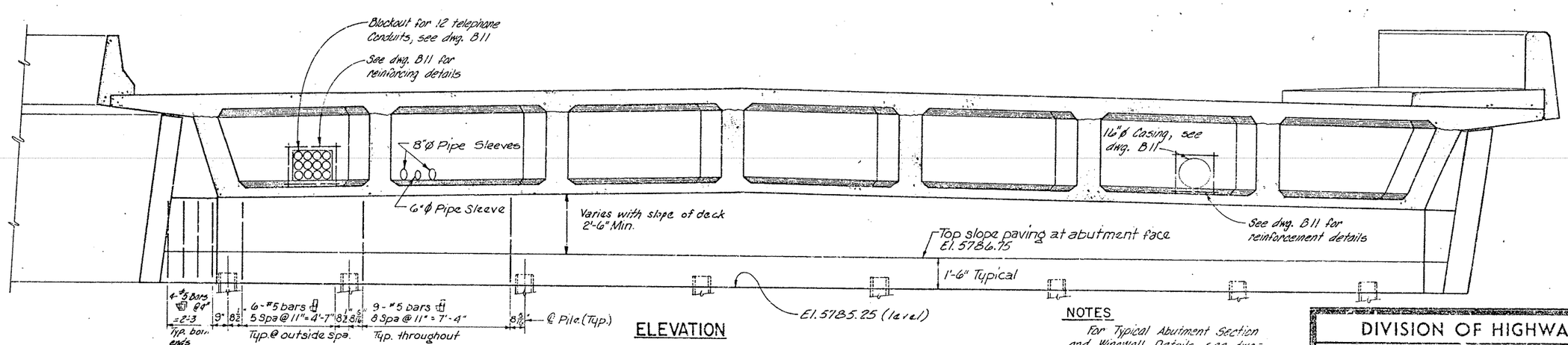

NOTES

For Typical Abutment Section and Wingwall Details, see dwgs. B7 and B8.

For Bending Details of Reinf. Steel in Abutments, see dwg. B7.

For Piling Layout, see dwg. B4.

DESIGNED BY	INITIAL R.K.M.	DATE 4/82	CHECKED BY A.M. 4/82
CHECKED BY	J.M.N.	4/82	QUANTITIES BY P.J. 4/82
DETAILED BY	D.L.C.	4/82	CHECKED BY J.P.L. 4/82

DIVISION OF HIGHWAYS

DANIELS PARK ROAD
OVER S.H. 470

ABUTMENT 3 DETAILS

Designer R. May	Structure Numbers	F-17-HR
Detailer D. Dougherty		
Drawing Number B6	of 20	Drawings

Revision Dates (Preliminary Issue Only)

STATE OF COLORADO
DEPARTMENT OF HIGHWAYS
DIVISION OF HIGHWAYS
DOH FORM NO. 117
REV. MAR. 1973

AS CONSTRUCTED		
NO REVISIONS 7-11-85	REVISED	VOID

FEDERAL ROAD REGION NO.	DIVISION	PROJ. NO.	SHEET NO.	TOTAL SHEETS
VIII	COLORADO	IXFU 470-1(9)	17	

REVISIONS		

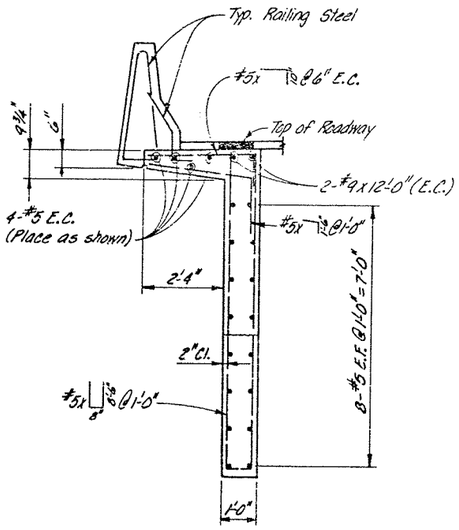

B-5,6,8 SECTION B

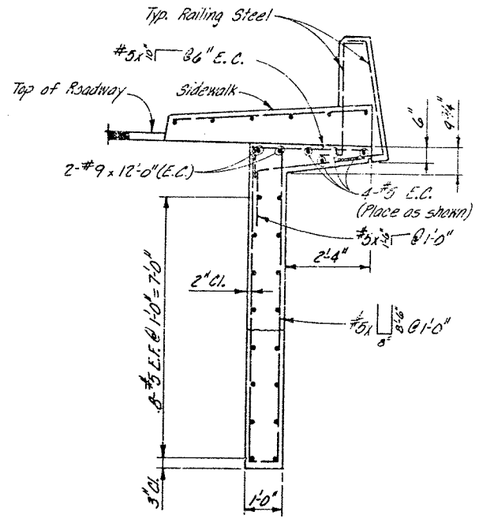

B-5,6,8 SECTION C

NOTES

See dwg. B15 for placement of railing reinforcing steel.

See dwg. B11 for placement of reinforcement and detail of sidewalk.

See dwg. B11 for blockout location at abutments.

E.C. = Epoxy Coated.

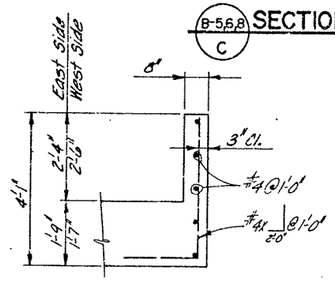

B 15 SECTION E

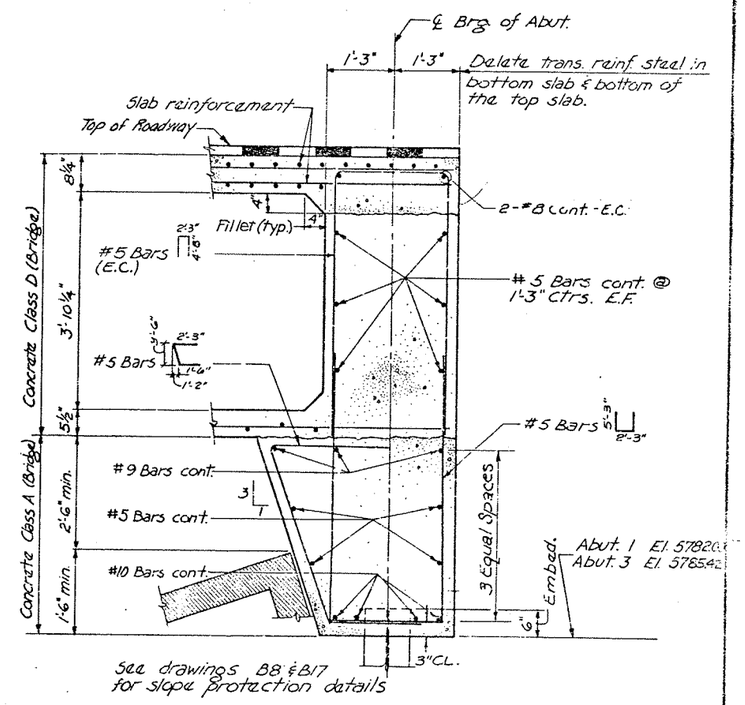

TYPICAL ABUTMENT SECTION

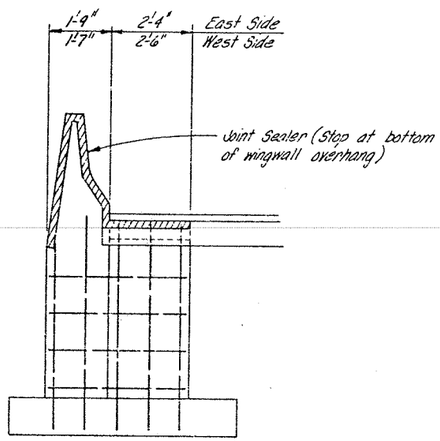

B-5,6 SECTION D

Traffic Barrier Shown, Sidewalk Barrier Similar

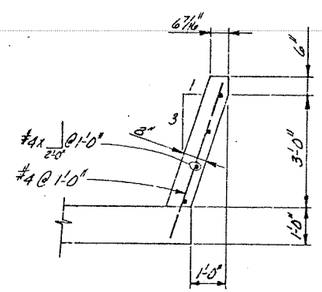

B-5,6 SECTION F

Note: Portion of Abutment and slab above bearing seat to be poured monolithically.

INITIAL	DATE	CHECKED BY	A.M.	4/82
R.K.M.	4/82			
J.M.H.	4/82	QUANTITIES BY	P.J.	4/82
D.L.D.	4/82	CHECKED BY	J.P.L.	4/82

DESIGNED BY
CHECKED BY
DETAILED BY

DIVISION OF HIGHWAYS

WINGWALL DETAILS

AND

TYP. ABUTMENT SECTION

DANIELS PARK ROAD OVER S.H. 470

Designer R. May		Structure Numbers	F-17-HR
Detailer D. Dougherty			
Drawing Number B7	of 30	Drawings	

Revision Date | Preliminary Use Only

STATE OF COLORADO
DEPARTMENT OF HIGHWAYS
DIVISION OF HIGHWAYS
DOH FORM NO. 117
REV. MAR. 1977

AS CONSTRUCTED			
NO REVISIONS	7-11-85	REVISED	VOID

FEDERAL ROAD REGION NO.	DIVISION	PROJ. NO.	SHEET NO.	TOTAL SHEETS
VIII	COLORADO	IXFU470-1(9)	18	

REVISIONS		

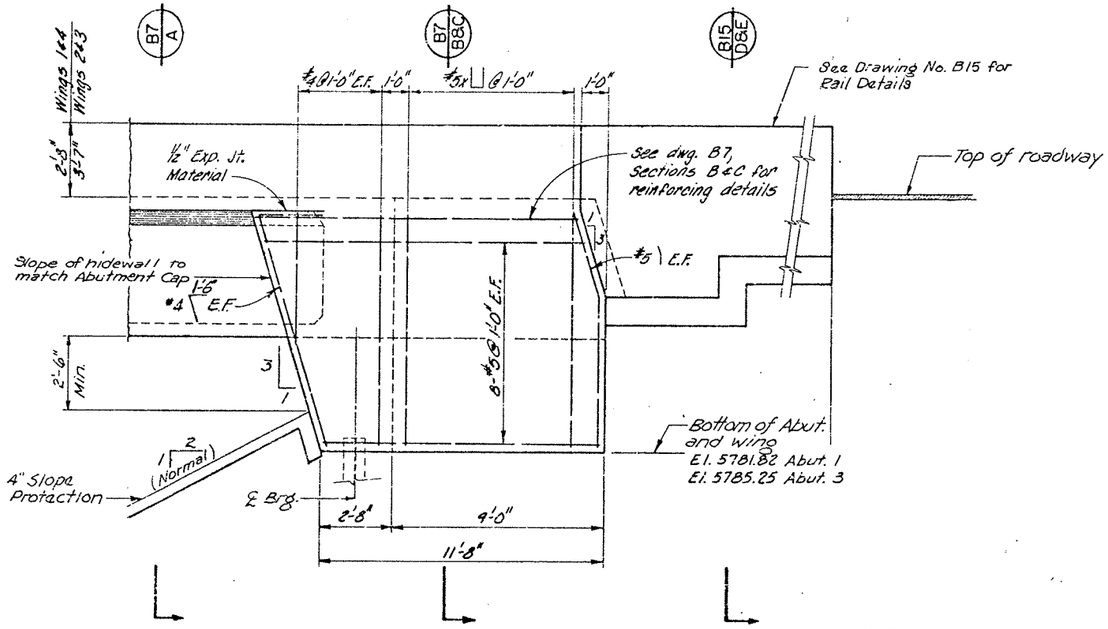

TYPICAL ELEVATION

NOTE

All dimensions measured along Proj. Line.

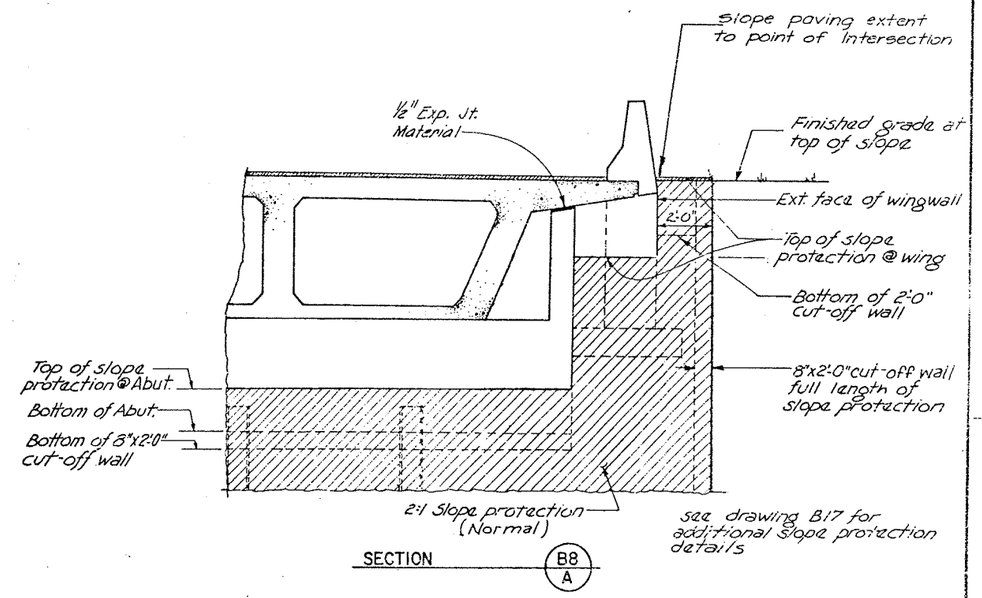

SECTION B8 A

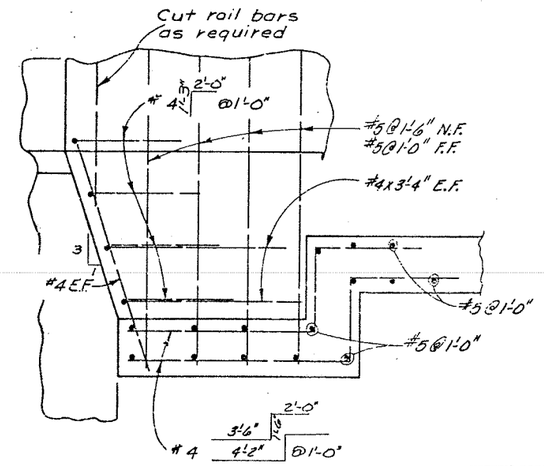

ELEVATION

END WALL DETAILS

DESIGNED BY	R.K.M.	4/82	CHECKED BY	A.M.	4/82
CHECKED BY	J.M.N.	4/82	QUANTITIES BY	P.J.	4/82
DETAILED BY	D.L.D.	4/82	CHECKED BY	J.P.L.	4/82

DIVISION OF HIGHWAYS

DANIELS PARK ROAD
OVER S.H. 470

WINGWALL DETAILS

Designer R. May	Structure Numbers	F-17-HR
Detailer: G. Dougherty		
Drawing Number B8	of 20	Preliminary

Revision Dates (Preliminary Stage Only)

STATE OF COLORADO
DEPARTMENT OF HIGHWAYS
DIVISION OF HIGHWAYS
CDH FORM NO. 117
REV. MAR. 1977

AS CONSTRUCTED			
NO REVISIONS		REVISED	7-11-85
VOID			

FEDERAL ROAD REGION NO.	DIVISION	PROJ. NO.	SHEET NO.	TOTAL SHEETS
VIII	COLORADO	IXFU470-1(9)	19	

REVISIONS			
R-2	3-19-85	REVISED STA., ELEV., & ANGLE	NGN
R-4	3-19-85	ADDED NOTES	NGN

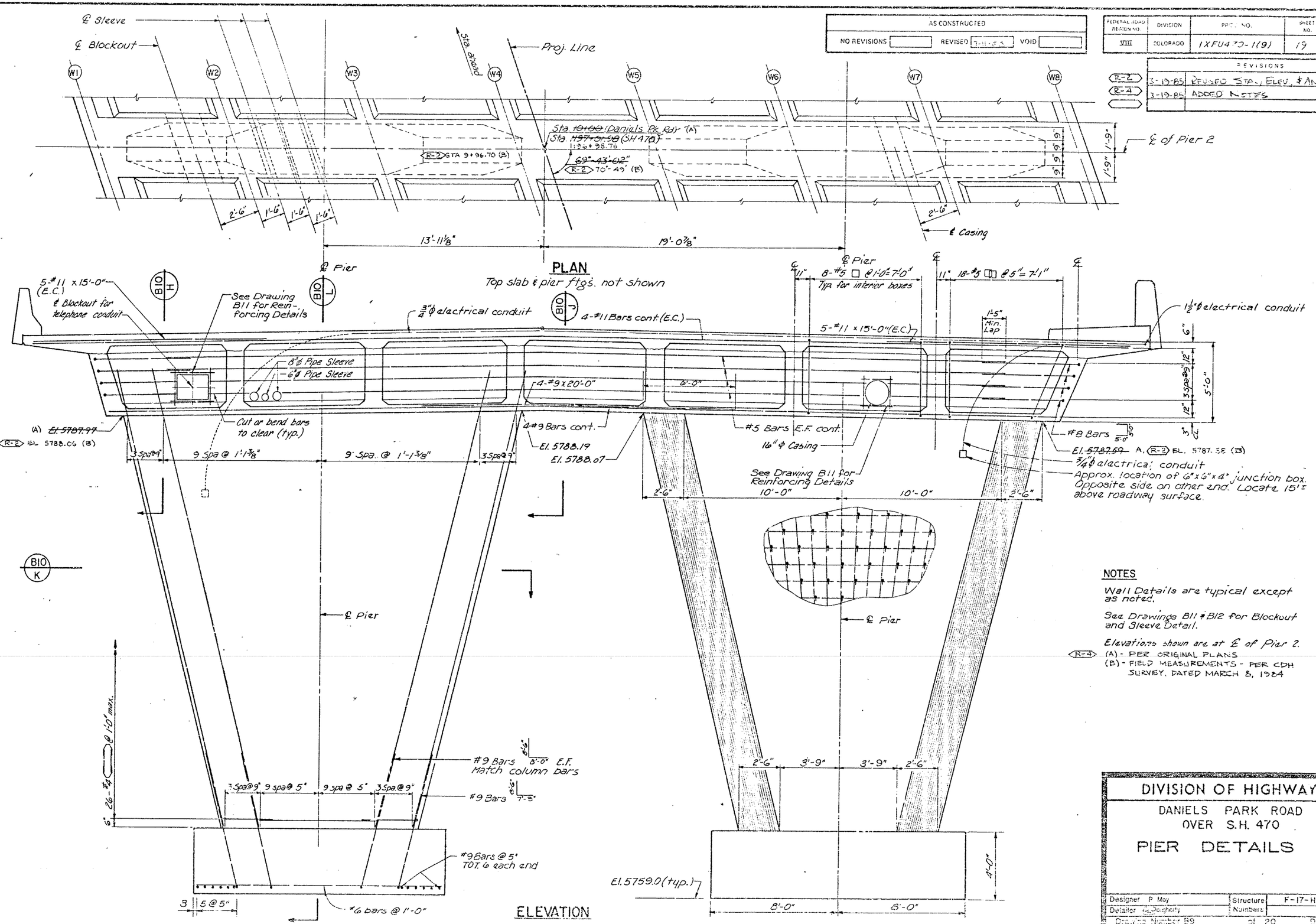

DESIGNED BY	INITIAL	DATE	CHECKED BY	A.M.	4/92
CHECKED BY	R.K.M.	4/82	QUANTITIES BY	P.J.	4/82
DETAILED BY	J.M.N.	4/82	CHECKED BY	J.P.L.	4/32
	D.L.D.	4/82			

NOTES

Wall Details are typical except as noted.

See Drawings B11 & B12 for Blockout and Sleeve Detail.

Elevations shown are at ℄ of Pier 2.

R-4 (A) - PER ORIGINAL PLANS
(B) - FIELD MEASUREMENTS - PER CDH SURVEY, DATED MARCH 8, 1984

DIVISION OF HIGHWAYS

DANIELS PARK ROAD
OVER S.H. 470

PIER DETAILS

Designer P. May	Structure Numbers	F-17-HR
Detailer G. Dougherty		
Drawing Number B9	of 20	Drawings

Revision Date

STATE OF COLORADO
DEPARTMENT OF HIGHWAYS
DIVISION OF HIGHWAYS
DOH FORM NO. 117
REV. MAR. 1977

AS CONSTRUCTED		
NO REVISIONS 7-11-85	REVISED	VOID

FEDERAL ROAD REGION NO.	DIVISION	PROJ. NO.	SHEET NO.	TOTAL SHEETS
VIII	COLORADO	IXFU 470-1(9)	20	

REVISIONS		

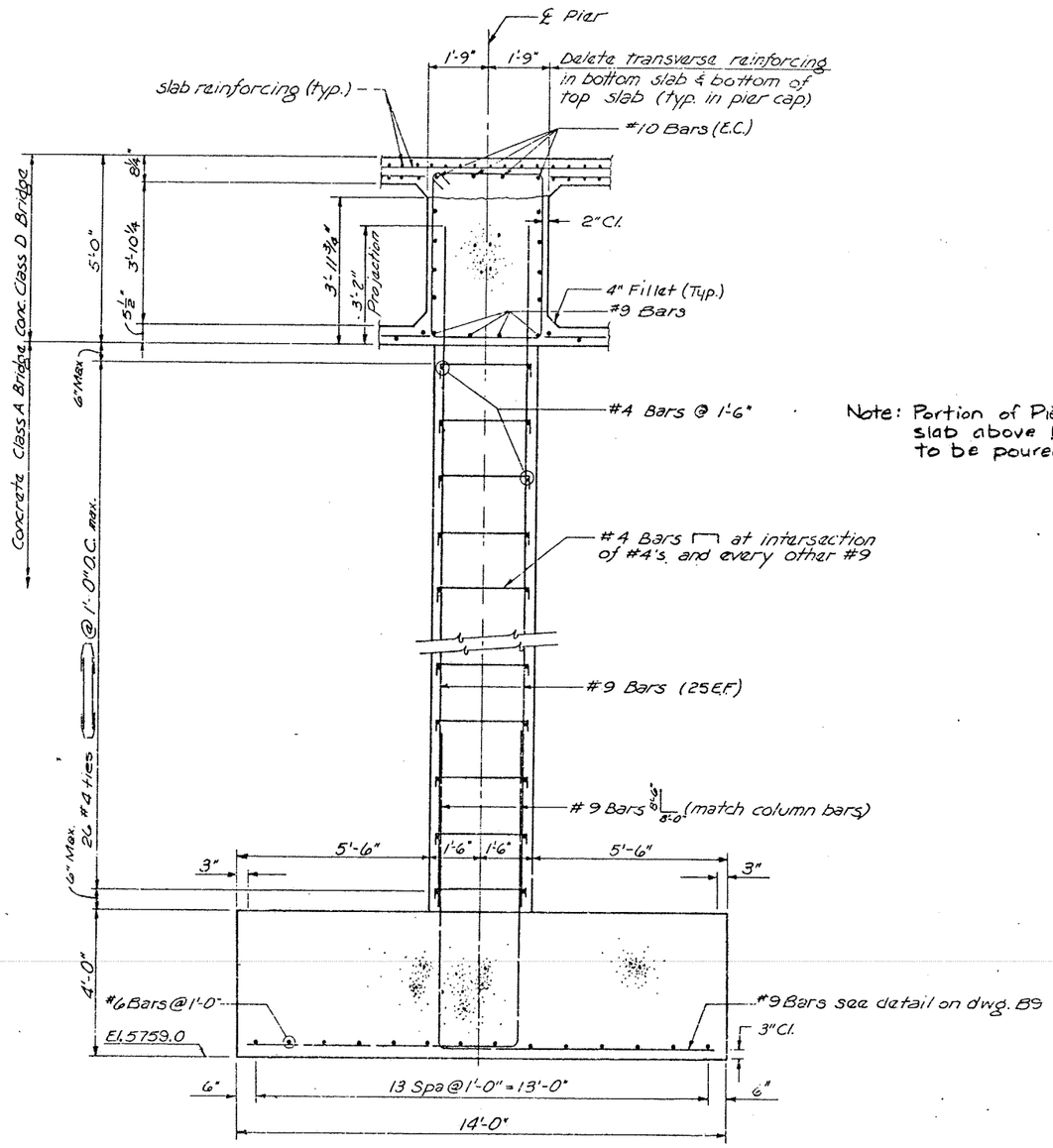

SECTION B9/L

Note: Portion of Pier Cap and slab above bearing seat to be poured monolithically.

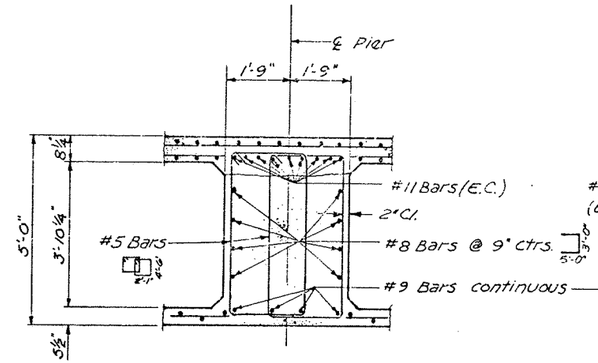

SECTION B9/H

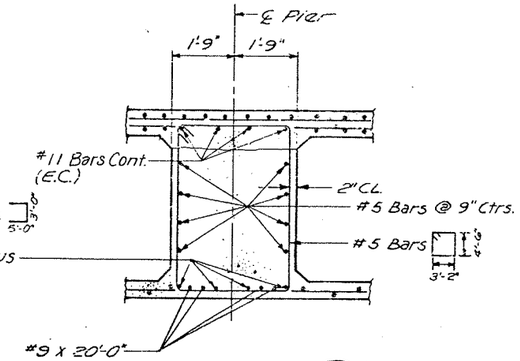

SECTION B9/J

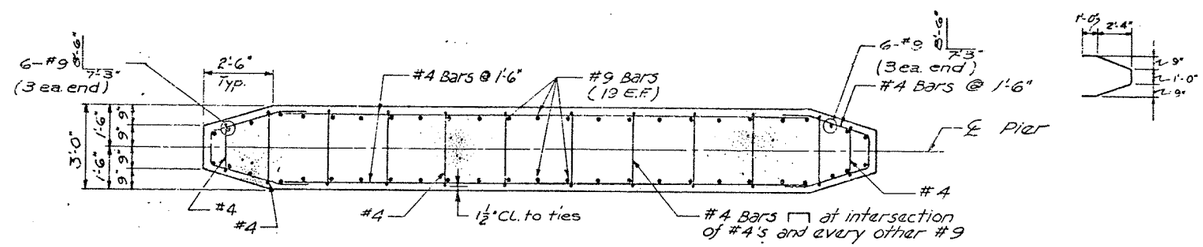

SECTION B9/K

	INITIAL	DATE		INITIAL	DATE
DESIGNED BY	R.K.M.	4/82	CHECKED BY	A.M.	4/82
CHECKED BY	J.M.N.	4/82	QUANTITIES BY	P.J.	4/82
DETAILED BY	D.L.D.	4/82	CHECKED BY	J.P.L.	4/82

DIVISION OF HIGHWAYS

DANIELS PARK ROAD
OVER S.H. 470

PIER SECTIONS

Designer R. May	Structure Numbers	F-17-HR
Detailer J. Dougherty		
Drawing Number B10	of 20	Drawings

Approval Date (Preliminary Stage Only)

STATE OF COLORADO
DEPARTMENT OF HIGHWAYS
DIVISION OF HIGHWAYS
DOH FORM NO. 111
REV. MAR. 1977

AS CONSTRUCTED			
NO REVISIONS		REVISED	7-11-85
VOID			

FEDERAL ROAD REGION NO.	DIVISION	PROJ. NO.	SHEET NO.	TOTAL SHEETS
VIII	COLORADO	IX FU-470-1(9)	21	

REVISIONS			
R-1	3-19-84	REVISED SPAN LENGTH	NGN
R-4	3-19-84	ADDED NOTES	NGN

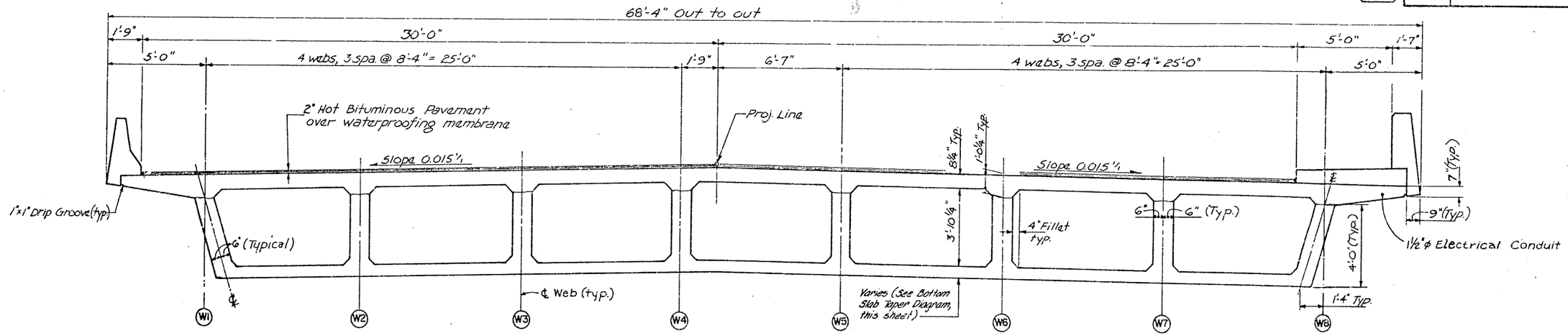

TYPICAL SECTION
(Normal to Proj. Line)

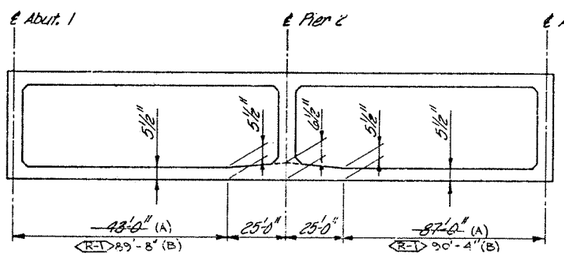

BOTTOM SLAB TAPER DIAGRAM

NOTES

For details of railing reinforcement, see dwg. B 15.

Transverse bars are placed parallel to ℄ Abut. & Pier. Spacing is measured along Proj. Line.

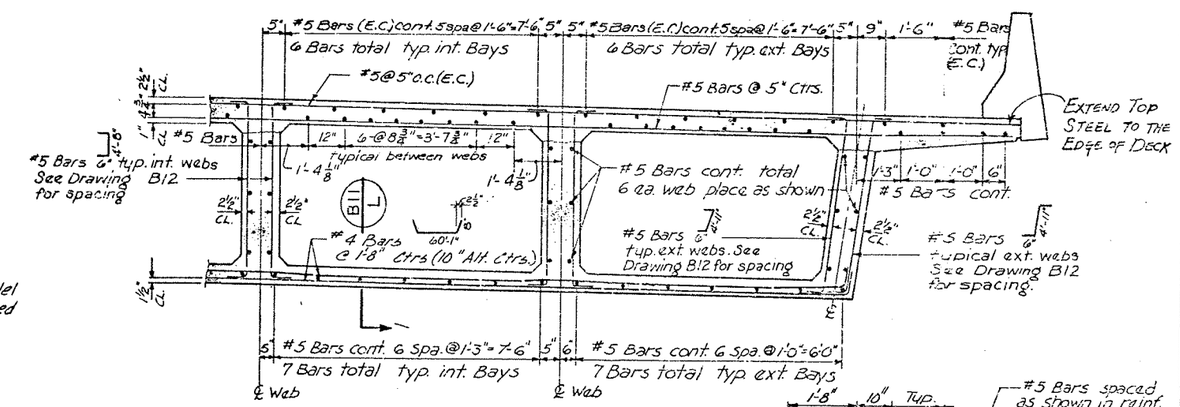

REINFORCING DETAIL
NOTE: E.C. = Epoxy Coated

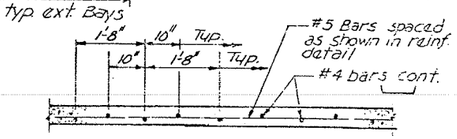

SECTION B11 / L

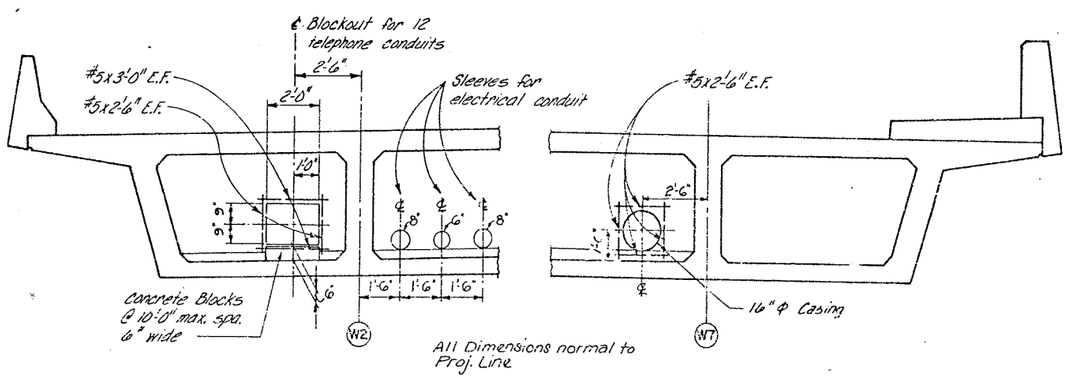

BLOCKOUT - AT SUPPORTS

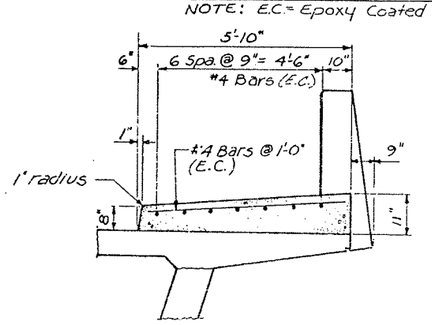

SIDEWALK DETAIL

INITIAL	DATE	CHECKED BY	A.M.	4/82
R.K.M.	4/82	QUANTITIES BY	P.J.	4/82
J.M.N.	4/82	CHECKED BY	J.P.L.	4/82
D.L.D.	4/82			

DESIGNED BY
CHECKED BY
DETAILED BY

DIVISION OF HIGHWAYS
DANIELS PARK ROAD
OVER S.H. 470
SUPERSTRUCTURE
DETAILS

Designer R. May		Structure Numbers	F-17-HB
Detailer G. Dougherty			
Drawing Number B11		of 20	Drawings

Revision Dates (Month / Day / Year Only)

STATE OF COLORADO
DEPARTMENT OF HIGHWAYS
DIVISION OF HIGHWAYS
DOH FORM NO. 117
REV. MAR. 1977

AS CONSTRUCTED			
NO REVISIONS		REVISED 7-11-85	VOID

FEDERAL ROAD REGION NO.	DIVISION	PROJ. NO.	SHEET NO.	TOTAL SHEETS
VIII	COLORADO	IXFU 470-1(9)	22	

REVISIONS		
3-5	3-20-84	REVISED ENTIRE DWG B-12 NGN

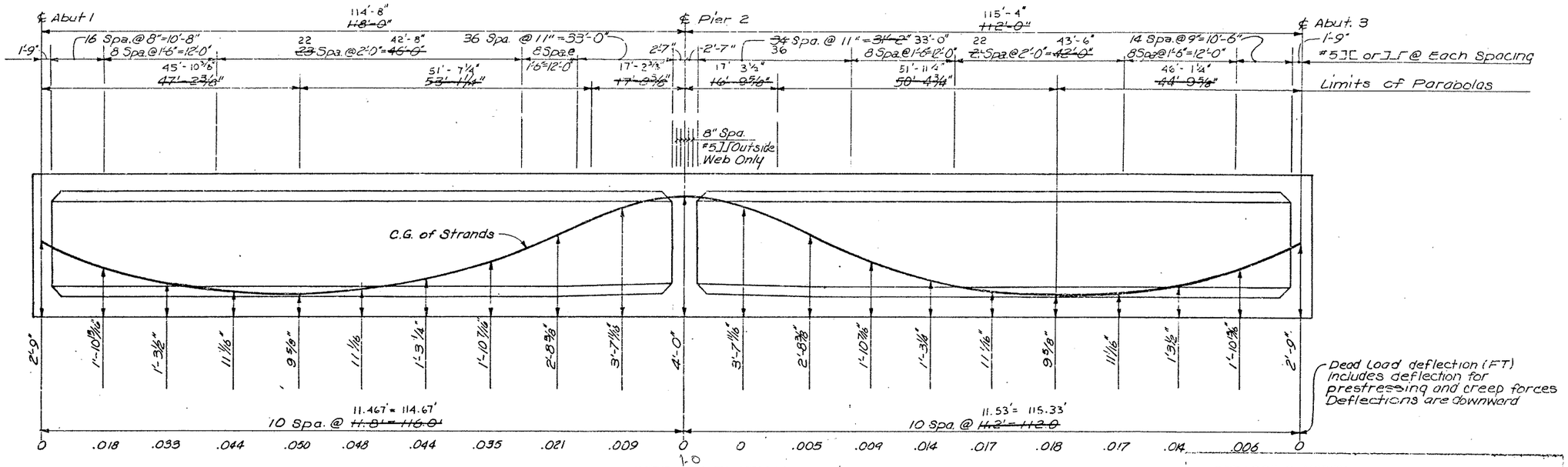

WEB ELEVATION
(AT PROJECT CENTERLINE)

4.2

2.25

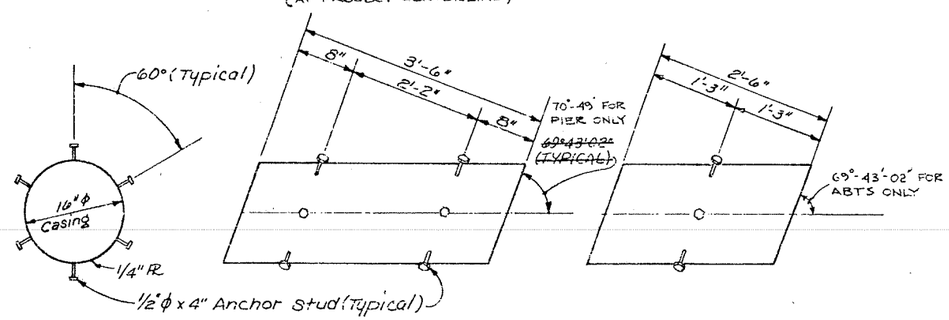

END VIEW

PIER

ABUTMENTS

PLAN VIEWS

BLOCKOUT RING DETAIL

STRESSING NOTES

JACKING FORCE

(PJACK) = 12,024 KIPS TOTAL AT JACKING ENDS, $A_s = \frac{PJACK}{0.75\ F'_s}$
F'_s = 270 KSI

CONCRETE

F'c = 4,500 PSI AT 28 DAYS
F'ci = 3,500 PSI AT TIME OF STREESSING

PRESTRESSING STEEL

AT THE CONTRACTOR'S OPTION, THE TENSIONING FORCE MAY VARY ±5% FROM THE THEORETICAL FORCE PER GIRDER PROVIDED THE TOTAL FORCE IS OBTAINED AND IS DISTRIBUTED SYMMETRICALLY ABOUT THE ℄ OF THE TYPICAL SECTION.

ONE END STRESSING IS PERMISSIBLE, IF APPROXIMATELY 1/2 OF THE TENDONS (±10%) ARE STRESSED FROM EACH END.

GENERAL

DESIGN IS BASED ON μ = 0.25 AND K = 0.0002.
PJACK SPECIFIED AT THE JACKING ENDS INCLUDES FRICTION LOSSES AND PROVISIONS FOR AN ADDITIONAL 34 KSI LOSS IN STRESS.

TENDON TO BE JACKED TO 0.75 F'_s AND ANCHORED AT AN EQUIVALENT ANCHOR SET = 5/8".

CONTRACTOR TO SUBMIT ELONGATION AND JACKING CALCULATIONS BASED ON $\mu\alpha$ + K L = 0.0893 AND INITIAL STRESS AT PIER 2 = 0.915 TIMES JACKING STRESS.

DESIGNED BY	INITIAL	DATE	CHECKED BY		AM	4/82
CHECKED BY	RKM	4/82	QUANTITIES BY		PJ	4/82
DETAILED BY	JMN	4/82	CHECKED BY		JPL	4/82
	DAM	4/82				

DIVISION OF HIGHWAYS

DANIELS PARK ROAD
OVER S.H. 470

SUPERSTRUCTURE DETAILS

Designer	R. Moy	Structure Numbers	F-17-HR
Detailer	D. Miller		
Drawing Number B12		of 20	Drawings

Revision Dates | Preliminary Stage Only

AS CONSTRUCTED			
NO REVISIONS	7-11-65	REVISED	VOID

FEDERAL ROAD REGION NO.	DIVISION	PROJ. NO.	SHEET NO.	TOTAL SHEETS
VIII	COLORADO	IXFU470-1(9)	23	

REVISIONS		

BRIDGE STANDARD 73

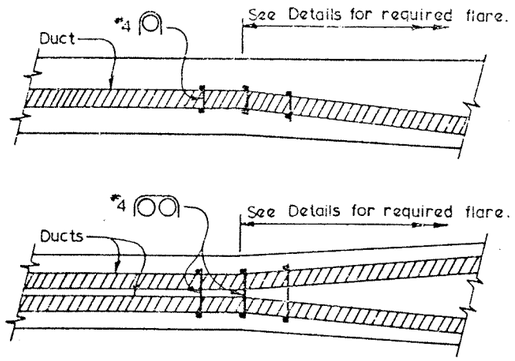

PLAN VIEWS

Provide #4 ties for each pair of ducts, or single ducts, tie to three stirrups at beginning of duct flare.

ADDITIONAL REINFORCEMENT AT FLARE OF DUCTS

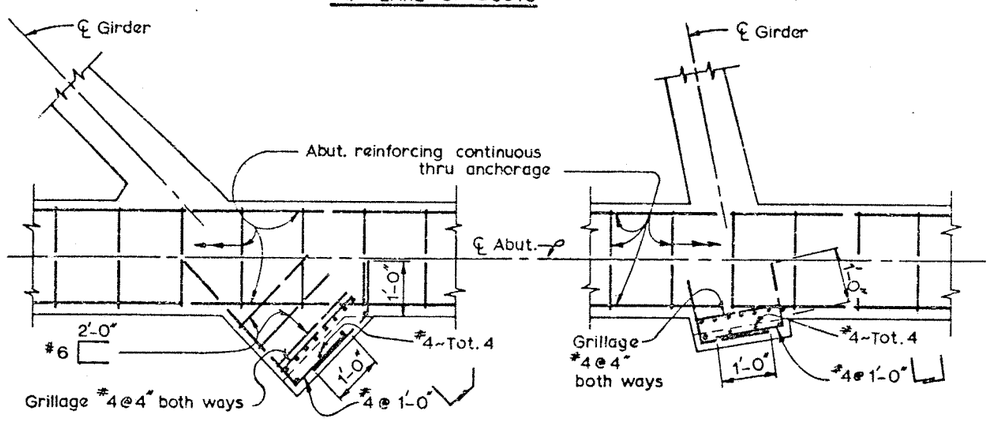

Skew Over 20° PLAN VIEWS Skew 20° & Under

BEARING SEAT FOR PRESTRESSED ANCHORAGE AT ABUTMENTS

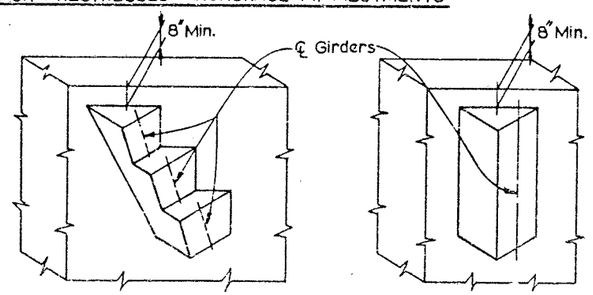

Ext. Sloping Girder Vertical Girder

TYPICAL BEARING SEAT ILLUSTRATIONS

Details may be modified to specific anchorage.

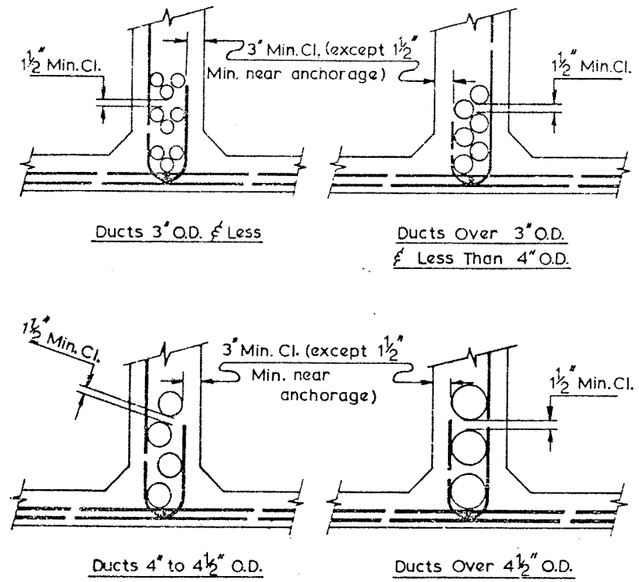

Ducts 3" O.D. & Less Ducts Over 3" O.D. & Less Than 4" O.D.

Ducts 4" to 4½" O.D. Ducts Over 4½" O.D.

CLEARANCE REQUIREMENTS FOR DUCTS

1. DUCT PATTERNS SHOWN ARE FOR A 12" WIDE GIRDER STEM: FOR OTHER WIDTHS THE MINIMUM CLEARANCES MUST BE MAINTAINED.
2. GIRDER STIRRUPS MUST BE BENT TO FIT THE DUCT SIZE USED, OR ⋃ STIRRUPS MAY BE USED.
3. APPROVAL OF THE ENGINEER IS REQUIRED FOR DEVIATIONS.

NOTES

RECESS FOR ANCHORAGE TO BE FILLED WITH CONCRETE TO PROVIDE A MINIMUM OF 1-1/2" COVER.

EDGE DISTANCE OF BEARING PLATES SHALL BE 1-1/2" MINIMUM.

DISTRIBUTION OF PRESTRESSING FORCE:

AT THE CONTRACTOR'S OPTION, THE PRESTRESSING FORCE MAY VARY 5% FROM THE THEORETICAL FORCE PER GIRDER PROVIDED THE TOTAL FORCE IS OBTAINED AND IS DISTRIBUTED SYM. ABOUT THE CENTERLINE OF THE TYPICAL SECTION.

STRESSING SEQUENCE:

NO MORE THAN 1/2 OF THE PRESTRESSING FORCE IN ANY GIRDER MAY BE STRESSED BEFORE AN EQUAL FORCE IS STRESSED IN THE ADJACENT GIRDERS. AT NO TIME DURING THE STRESSING OPERATIONS WILL MORE THAN 1/6 OF THE TOTAL PRESTRESSING FORCE BE APPLIED ECCENTRICALLY ABOUT THE CENTERLINE OF THE STRUCTURE.

GIRDER STEM SHALL BE FLARED NEAR ANCHORAGE TO PROVIDE A MINIMUM OF 1-1/2" CONCRETE COVERING THE DUCTS, FLARE MAY BE ON ONE SIDE OF THE GIRDER ONLY.

BAR REINFORCEMENT INTERFERING WITH THE PRESTRESSING TENDON ALIGNMENT SHALL BE ADJUSTED AS APPROVED BY THE ENGINEER.

INITIAL	DATE	CHECKED BY	DATE
FORMULATED BY R.K.M.	4/82	CHECKED BY D.L.D.	4/82
CHECKED BY J.M.H.	4/82	QUANTITIES BY P.J.	4/82
DETAILED BY WRH	1-77	CHECKED BY J.P.L.	4/82

DIVISION OF HIGHWAYS

CAST-IN-PLACE PRESTRESSED GIRDER DETAILS

DANIELS PARK ROAD OVER S.H. 470

Designer R.K. MOY		Structure	F-17-HR
Detailer W.R. HESSLER		Number	
Drawing Number B73	37	20	Contract

Section Date | Agency Sheet Count | 73

(11-1-79)

DIVISION OF HIGHWAYS STATE OF COLORADO
DOH FORM NO. 117
REV JAN 1979

AS CONSTRUCTED		
NO REVISIONS 7-10-85	REVISED	VOID

FEDERAL ROAD REGION NO	DIVISION	PROJ. NO.	SHEET NO	TOTAL SHEETS
VIII	COLORADO	IXFU-470-1(9)	24	

REVISIONS		

BRIDGE STANDARD 71

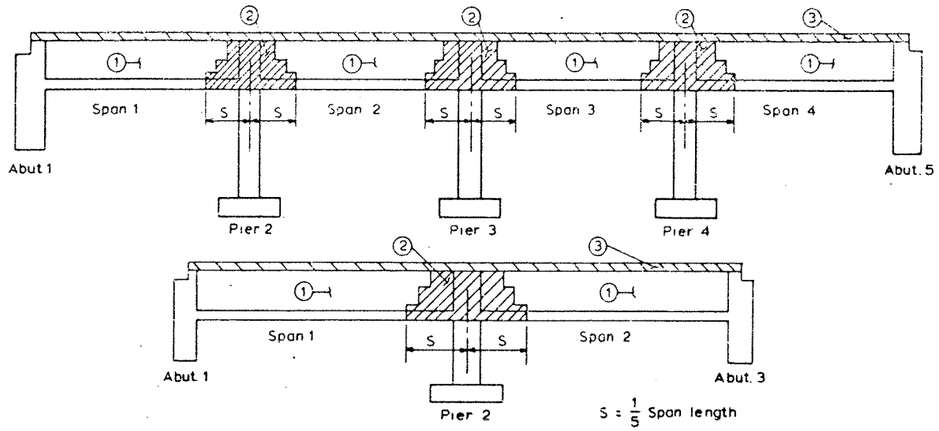

BOX GIRDER SUPERSTRUCTURE PLACING SCHEDULE

Note: Numbers ① and ② indicate sequence of placing bottom slab and girder web concrete when each section constitutes a separate pour. Any combination of ① and ② sections may be placed in one continuous pour. Top slab concrete ③ shall be placed separately from ① and ②. ③ may be placed continuously or in parts, as approved by the Engineer, providing no transverse construction joints fall within the ② areas. Contractor may submit an alternate placing schedule to the engineer for approval.

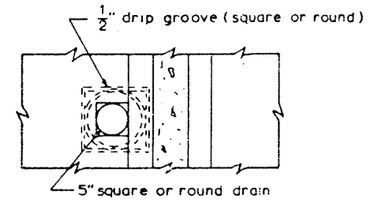

PLAN

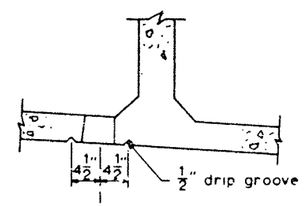

ELEVATION

BOTTOM SLAB DRAIN DETAIL

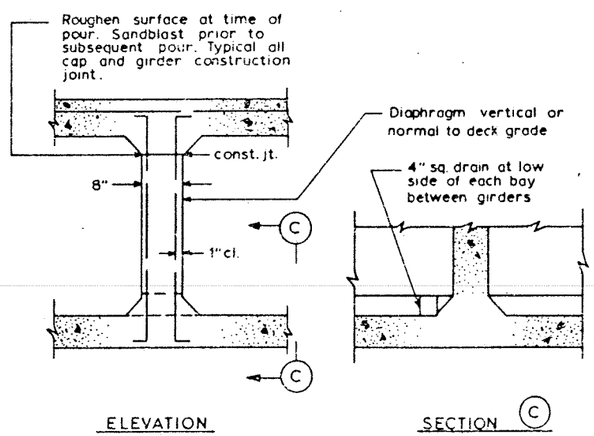

ELEVATION

SECTION (C)

INTERMEDIATE DIAPHRAGM SECTION

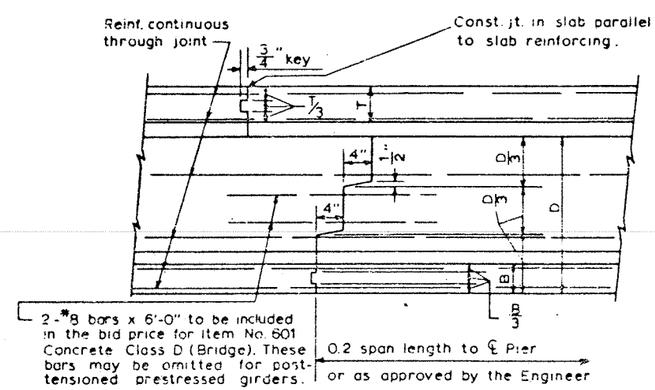

TRANSVERSE GIRDER CONSTRUCTION JOINT

T = Top slab thickness
B = Bottom slab thickness

INITIAL	DATE	CHECKED BY	Q.M.	4/82
R.K.M.	4/82	QUANTITIES BY	P.J.	4/82
J.N.N.	4/82	CHECKED BY	J.P.L.	4/82
D.L.D.	4/82			

SCHEDULED BY
CHECKED BY
DETAILED BY

DIVISION OF HIGHWAYS

DANIELS PARK ROAD
OVER S.H. 470

BOX GIRDER DETAILS

Designer R.K.MOY		Structure Numbers	F-17-HR
Detailer D.L.DOUGHERTY			
Drawing Number B14	of 20	Drawing	

(11-1-79)

Revision Dates — Preliminary Stage Only!

71

STATE OF COLORADO
DEPARTMENT OF HIGHWAYS
DIVISION OF HIGHWAYS
DOH FORM NO. 117
REV. MAR. 1977

AS CONSTRUCTED			
NO REVISIONS		REVISED 7/11/95	VOID

FEDERAL ROAD REGION NO.	DIVISION	PROJ NO.	SHEET NO.	TOTAL SHEETS
VIII	COLORADO	IXFU 470-1(9)	25	

REVISIONS		

Note: For fence details see Dwg. No. B16

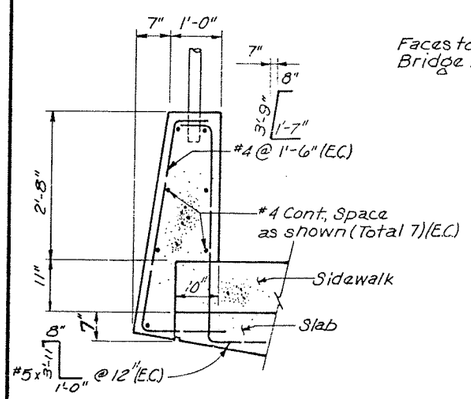

SECTION THRU BRIDGE RAIL

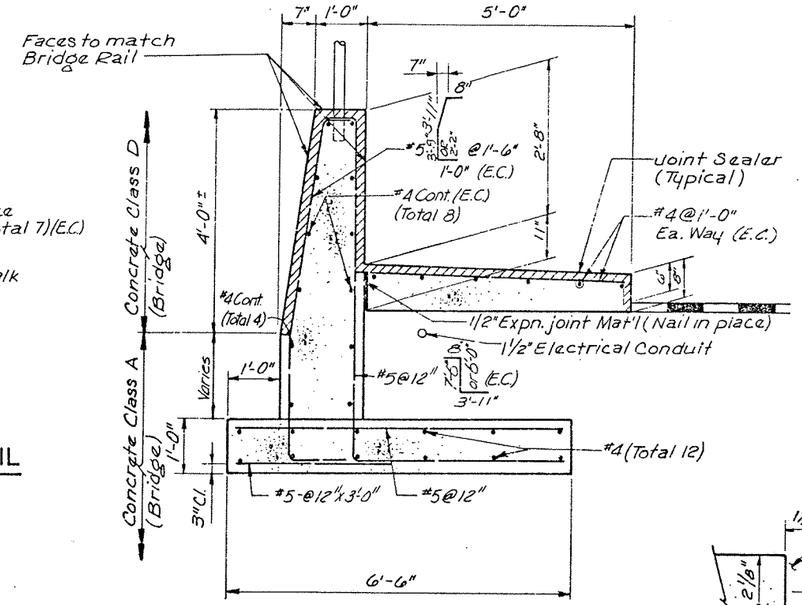

SECTION (B15/E) WALL

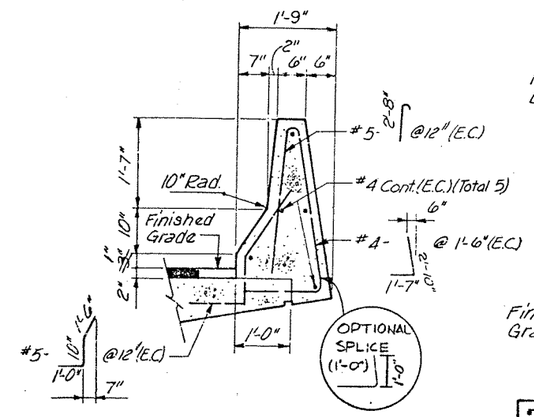

SECTION THRU BRIDGE RAIL

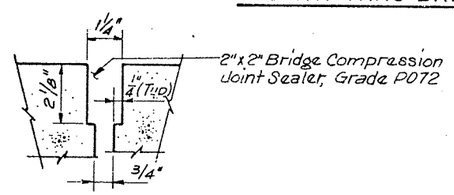

SECTION THRU JOINT

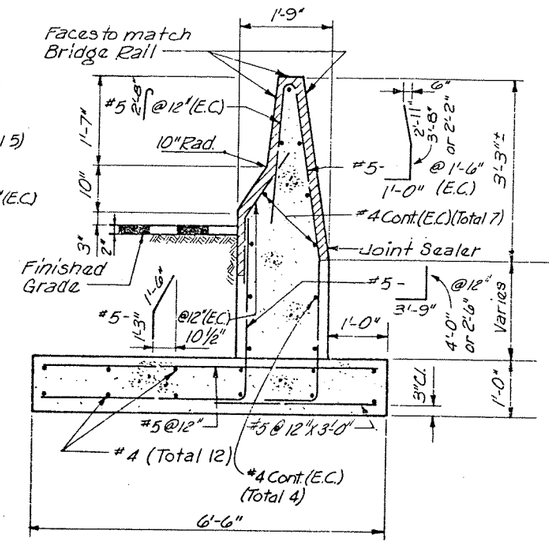

SECTION (B15/D) WALL

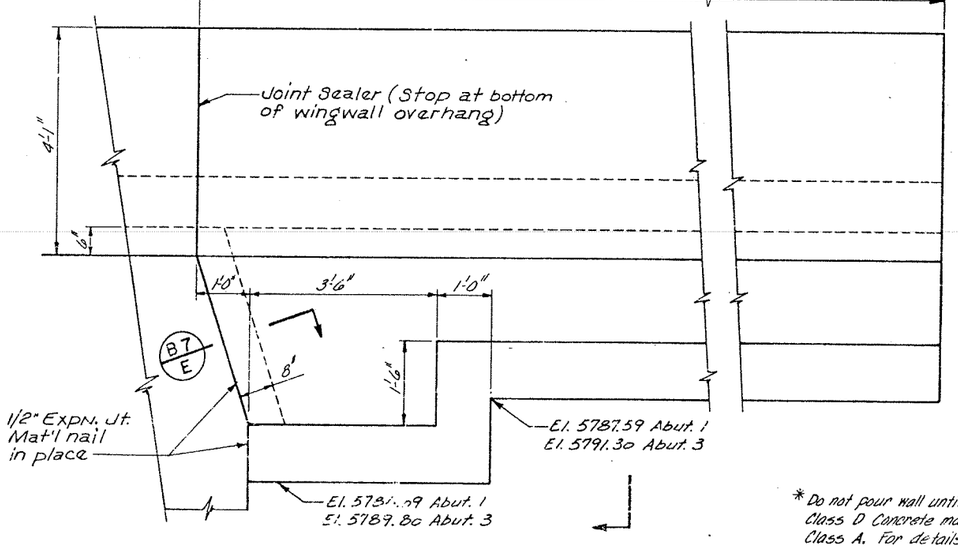

WALL ELEVATION

RAIL DETAILS RIGHT SIDE OF BRIDGE

South Wing shown, North Wing opposite hand

* Do not pour wall until bridge has been stressed. Class D Concrete may be substituted for Class A. For details of end walls, see dwg. B8.

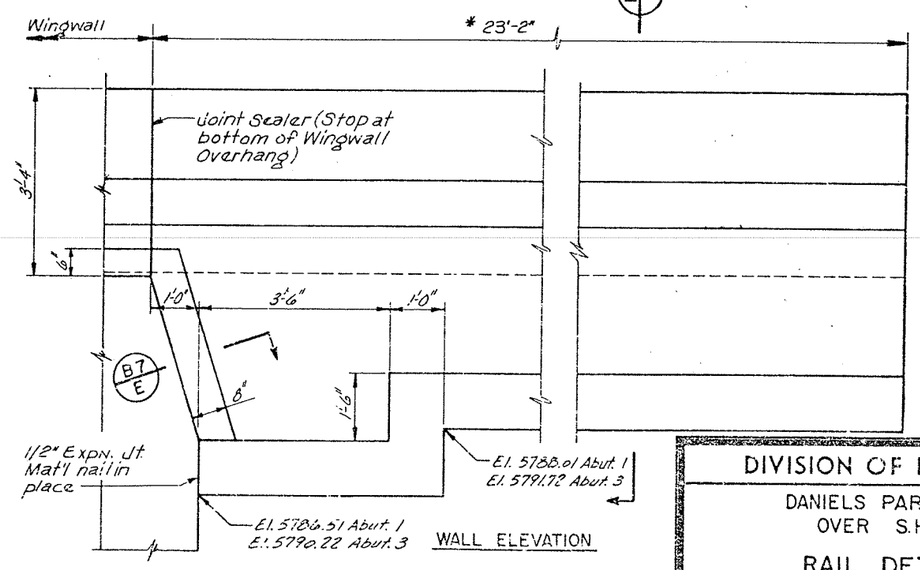

WALL ELEVATION

RAIL DETAILS LEFT SIDE OF BRIDGE

South Wing shown, North Wing opposite hand

	INITIAL	DATE	CHECKED BY	A.M.	4/82
DESIGNED BY	R.K.M.	4/82	QUANTITIES BY	P.J.	4/82
CHECKED BY	J.M.N.	4/82	CHECKED BY	J.P.L.	4/82
DETAILED BY	D.A.M.	4/82			

DIVISION OF HIGHWAYS

DANIELS PARK ROAD
OVER S.H. 470

RAIL DETAILS

Designer	R. Nou	Structure Numbers	F-17-HR
Detailer	D. Miller		
Drawing Number B15		of 20	Drawings

Revision Dates (Preliminary Close Drive)

STATE DEPARTMENT OF HIGHWAYS
DIVISION OF HIGHWAYS - STATE OF COLORADO
DOH FORM NO 117
REV OCTOBER 1953

AS CONSTRUCTED		
NO REVISIONS 7-11-85	REVISED	VOID

FEDERAL ROAD REGION NO	DIVISION	PROJ. NO.	SHEET NO.	TOTAL SHEETS
VIII	COLORADO	IXFU 470-1 (9)	26	

REVISIONS		

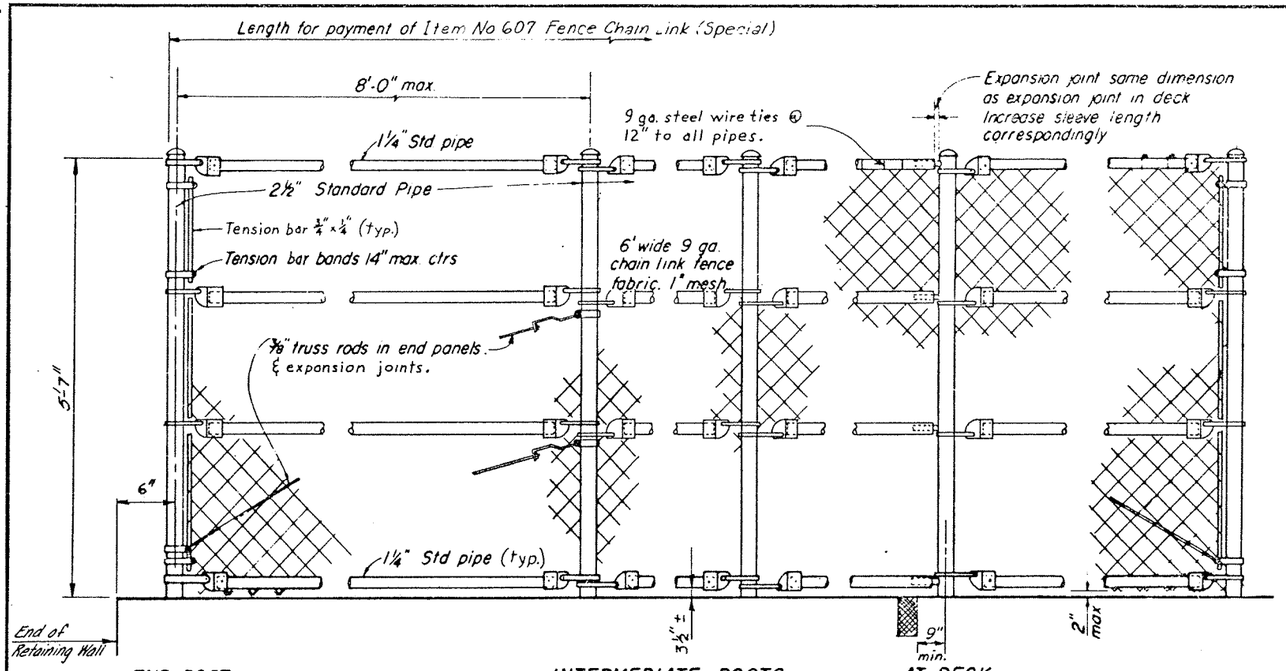

END POST

INTERMEDIATE POSTS

AT DECK EXPANSION JOINTS

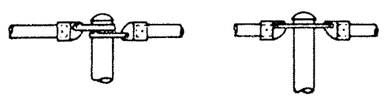

ALTERNATIVE DETAILS

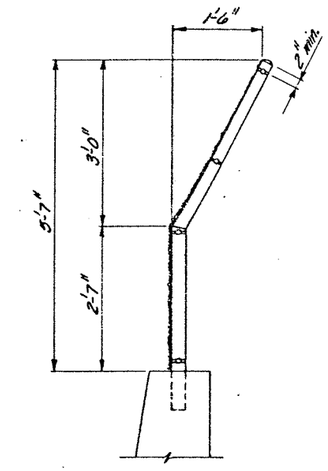

TYPICAL SECTION

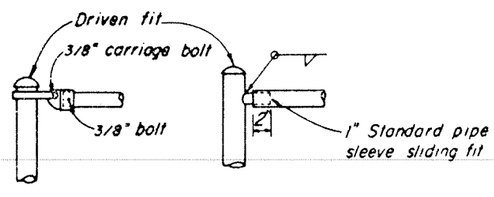

TYPICAL CONNECTION DETAILS

NOTES :

1. Railing assembly (except chain link fabric) to be galvanized after fabrication.
2. Peen all 3/8" bolts.
3. Railing shall conform to horizontal and vertical alignment Posts shall be vertical.
4. Alternative details may be submitted by Contractor for Engineer's approval.

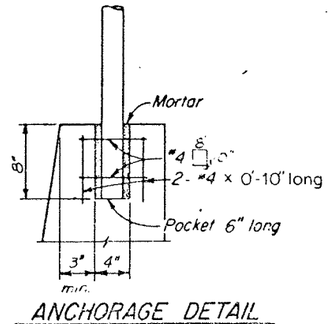

ANCHORAGE DETAIL

May be used when thickness of concrete is 12" or more.

INITIAL	DATE	CHECKED BY	A.M.	4/82
R.K.M.	4/82	QUANTITIES BY	P.J.	4/82
J.M.N.	4/82	CHECKED BY	J.P.L.	4/82
K.H.	4/82			

DESIGNED BY
CHECKED BY
DETAILED BY

DIVISION OF HIGHWAYS

DANIELS PARK ROAD
OVER S.H. 470

FENCE CHAIN LINK (SPECIAL)

Designer R. MOY	Structure Numbers	F-17-HR
Detailer K. HEATER		
Drawing Number R16	of 20	Drawings

(11-1-79)

Scale: Inches — Half Size Only

STATE OF COLORADO
DEPARTMENT OF HIGHWAYS
DIVISION OF HIGHWAYS
DOH FORM NO. 117
REV. MAR. 1977

AS CONSTRUCTED			
NO REVISIONS		REVISED 7-11-85	VOID

FEDERAL ROAD REGION NO.	DIVISION	PROJ. NO.	SHEET NO.	TOTAL SHEETS
VIII	COLORADO	IXFU 470-1 (9)	27	

REVISIONS		

	INITIAL	DATE		
DESIGNED BY	R.K.M.	4/82	CHECKED BY	A.M. 4/82
CHECKED BY	J.M.N.	4/82	QUANTITIES BY	P.J. 4/82
DETAILED BY	F.K.	4/82	CHECKED BY	J.P.L. 4/82

NOTES:

SLOPE PAVING SIMILAR AT ABUTMENT 1.

SLOPE PAVING SHALL BE POURED IN 10-FT. TRANSVERSE SECTIONS WITH A TOOLED CONSTRUCTION JOINT AT EACH SECTION.

WIRE FABRIC SHALL BE 2" FROM THE END OF THE JOINT AND SHALL LAP 8" AT SPLICES.

WHERE SLOPE PAVING BUTTS AGAINST STRUCTURAL CONCRETE, SEPARATE WITH 1" EXPANSION JOINT MATERIAL, EXCEPT AT FRONT FACE OF THE ABUTMENT.

EXPANSION JOINT MATERIAL AND WELDED WIRE FABRIC SHALL NOT BE PAID FOR SEPARATELY, BUT SHALL BE INCLUDED IN ITEM 507 CONCRETE SLOPE AND DITCH PAVING (REINFORCED).

THE SURFACE OF FINISHED SLOPE PAVING SHALL RECEIVE A FLOAT FINISH OF UNIFORM APPEARANCE FREE OF FLOAT MARKS AND SMOOTHLY TROWLED CONSTRUCTION JOINTS.

STRUCTURE EXCAVATION FOR SLOPE AND DITCH PAVING SHALL BE LIMITED TO THE ACTUAL VOLUME OCCUPIED BY THE SLOPE PAVING CONCRETE.

SEE GENERAL LAYOUT FOR LIMITS OF SLOPE PAVING
ALSO SEE, B8, SECTION A.

BACKFILL IN AREA NEXT TO WINGWALLS AND BELOW OVERHANG SHALL BE PLACED AND COMPACTED PRIOR TO PLACING CONCRETE IN THE OVERHANG.

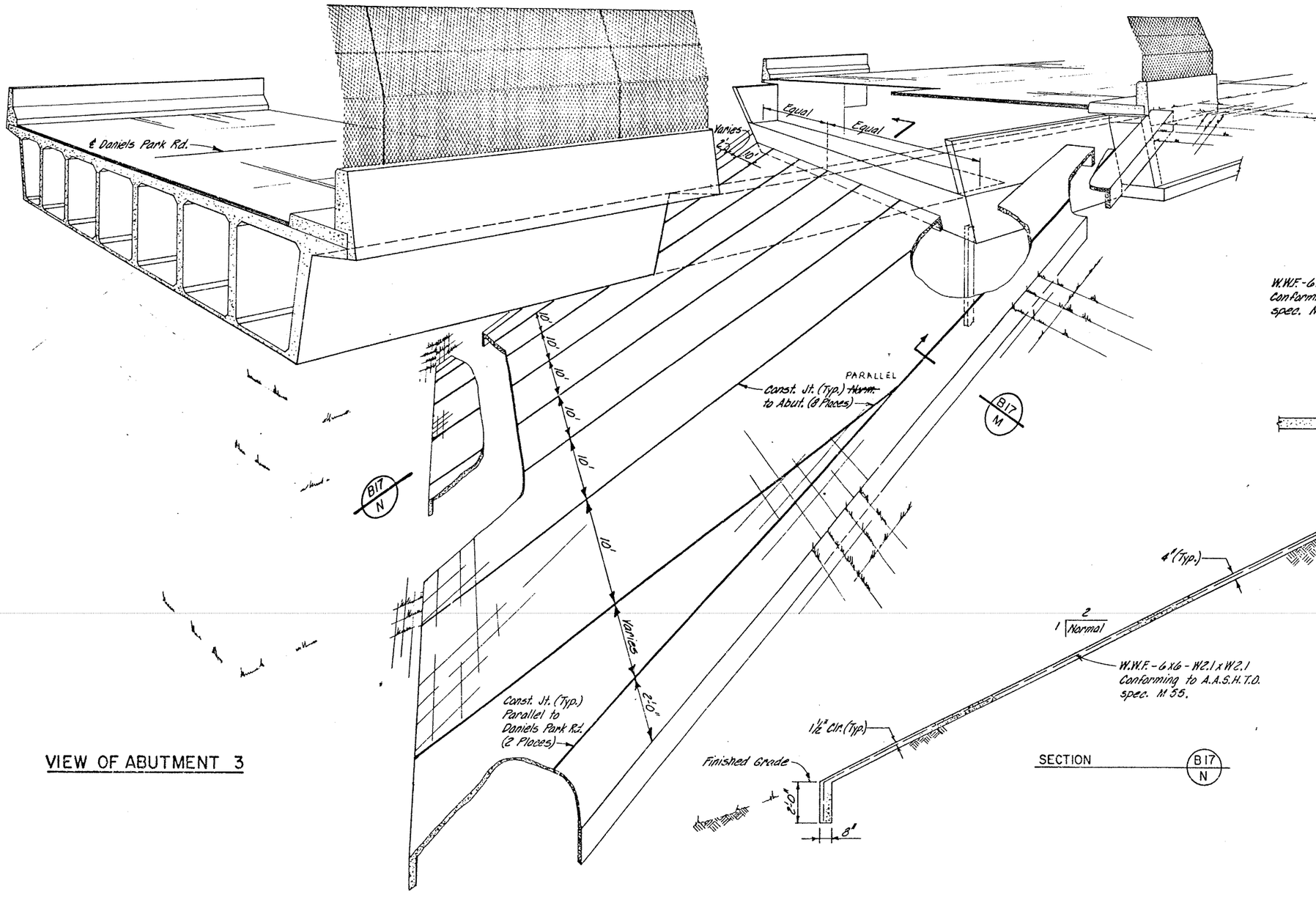

VIEW OF ABUTMENT 3

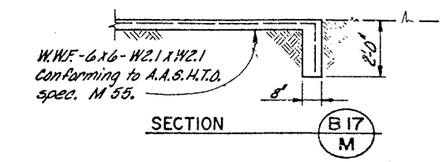

SECTION B17 M

SECTION B17 N

DIVISION OF HIGHWAYS

DANIELS PARK ROAD
OVER S.H. 470

SLOPE PAVING DETAILS

Designer	R. Moy	Structure Numbers	F-17-HR
Detailer	F. Kreiner		
Drawing Number B17		of 20	Drawings

Revision Dates (Preliminary Stage Only)

FEDERAL ROAD REGION NO.	DIVISION	PROJ. NO.	SHEET NO.	TOTAL SHEETS
VIII	COLORADO	IXFU 470-1(9)	28	

	REVISIONS		
R-1	3/20/84	REVISED ENT RE B-19 DRAWING	NSN

AS CONSTRUCTED

NO REVISIONS [ ] REVISED [ ] VOID 7-11-85

BRIDGE STANDARD 2

LONGITUDINAL LINE: LEFT EDGE DECK

BENT LINE DESCRIPTION OR FRACTIONAL POINT DESIGNATION	STATION	OFFSET	ELEVATION
N WINGWALL	8+82.6034	-31.0033	5790.9875
BF ABUT 1	8+92.1241	-31.0033	5791.1291
CL BRG A1	8+93.4567	-31.0033	5791.1490
X-1	8+98.3096	-31.0033	5791.2212
X-2	9+04.2096	-31.0033	5791.3090
X-3	9+10.1096	-31.0033	5791.3968
X-4	9+16.0096	-31.0033	5791.4846
X-5	9+21.9096	-31.0033	5791.5723
X-6	9+27.8096	-31.0033	5791.6601
X-7	9+33.7096	-31.0033	5791.7479
X-8	9+39.6096	-31.0033	5791.8357
X-9	9+45.5096	-31.0033	5791.9235
X-10	9+51.4096	-31.0033	5792.0113
X-11	9+57.3096	-31.0033	5792.0991
X-12	9+63.2096	-31.0033	5792.1869
X-13	9+69.1096	-31.0033	5792.2747
X-14	9+75.0096	-31.0033	5792.3625
X-15	9+80.9096	-31.0033	5792.4503
X-16	9+86.8096	-31.0033	5792.5381
X-17	9+92.7096	-31.0033	5792.6259
X-18	9+98.6096	-31.0033	5792.7136
X-19	10+04.5096	-31.0033	5792.8014
CL PIER 2	10+11.4567	-31.0033	5792.9348
X-1	10+16.0096	-31.0033	5792.9726
X-2	10+21.6096	-31.0033	5793.0559
X-3	10+27.2096	-31.0033	5793.1392
X-4	10+32.8096	-31.0033	5793.2225
X-5	10+38.4096	-31.0033	5793.3059
X-6	10+44.0096	-31.0033	5793.3892
X-7	10+49.6096	-31.0033	5793.4725
X-8	10+55.2096	-31.0033	5793.5559
X-9	10+60.8096	-31.0033	5793.6392
X-10	10+66.4096	-31.0033	5793.7225
X-11	10+72.0096	-31.0033	5793.8058
X-12	10+77.6096	-31.0033	5793.8892
X-13	10+83.2096	-31.0033	5793.9725
X-14	10+88.8096	-31.0033	5794.0558
X-15	10+94.4096	-31.0033	5794.1391
X-16	11+00.0096	-31.0033	5794.2225
X-17	11+05.6096	-31.0033	5794.3058
X-18	11+11.2096	-31.0033	5794.3591
X-19	11+15.8096	-31.0033	5794.4725
CL BRG A3	11+23.4567	-31.0033	5794.5714
BF ABUT 3	11+24.7893	-31.0033	5794.5912
S WINGWALL	11+31.2715	-31.0033	5794.6077

LONGITUDINAL LINE: LEFT FACE OF CURB

BENT LINE DESCRIPTION OR FRACTIONAL POINT DESIGNATION	STATION	OFFSET	ELEVATION
N WINGWALL	8+82.6034	-30.0033	[illegible]
BF ABUT 1	8+91.7545	-30.0033	[illegible]
CL BRG A1	8+93.0871	-30.0033	[illegible]
X-1	8+98.3096	-30.0033	[illegible]
X-2	9+04.2096	-30.0033	[illegible]
X-3	9+10.1096	-30.0033	[illegible]
X-4	9+16.0096	-30.0033	[illegible]
X-5	9+21.9096	-30.0033	[illegible]
X-6	9+27.8096	-30.0033	[illegible]
X-7	9+33.7096	-30.0033	[illegible]
X-8	9+39.6096	-30.0033	[illegible]
X-9	9+45.5096	-30.0033	[illegible]
X-10	9+51.4096	-30.0033	[illegible]
X-11	9+57.3096	-30.0033	[illegible]
X-12	9+63.2096	-30.0033	[illegible]
X-13	9+69.1096	-30.0033	[illegible]
X-14	9+75.0096	-30.0033	[illegible]
X-15	9+80.9096	-30.0033	[illegible]
X-16	9+86.8096	-30.0033	[illegible]
X-17	9+92.7096	-30.0033	[illegible]
X-18	9+98.6096	-30.0033	[illegible]
X-19	10+04.5096	-30.0033	[illegible]
CL PIER 2	10+11.0871	-30.0033	[illegible]
X-1	10+15.0096	-30.0033	[illegible]
X-2	10+21.6096	-30.0033	[illegible]
X-3	10+27.2096	-30.0033	[illegible]
X-4	10+32.8096	-30.0033	[illegible]
X-5	10+38.4096	-30.0033	[illegible]
X-6	10+44.0096	-30.0033	[illegible]
X-7	10+49.6096	-30.0033	[illegible]
X-8	10+55.2096	-30.0033	[illegible]
X-9	10+60.8096	-30.0033	[illegible]
X-10	10+66.4096	-30.0033	[illegible]
X-11	10+72.0896	-30.0033	[illegible]
X-12	10+77.6096	-30.0033	[illegible]
X-13	10+83.2096	-30.0033	[illegible]
X-14	10+88.8096	-30.0033	[illegible]
X-15	10+94.4096	-30.0033	[illegible]
X-16	11+00.0096	-30.0033	[illegible]
X-17	11+05.6096	-30.0033	[illegible]
X-18	11+11.2096	-30.0033	[illegible]
X-19	11+15.8096	-30.0033	[illegible]
CL BRG A3	11+23.0671	-30.0033	[illegible]
BF ABUT 3	11+24.4197	-30.0033	[illegible]
S WINGWALL	11+31.2715	-30.0033	[illegible]

LONGITUDINAL LINE: CL LEFT WING

BENT LINE DESCRIPTION OR FRACTIONAL POINT DESIGNATION	STATION	OFFSET	ELEVATION
N WINGWALL	8+82.6034	-28.1657	5791.0390
BF ABUT 1	8+91.0770	-28.1657	5791.1561
CL BRG A1	8+92.4096	-28.1657	5791.1759
CL BRG A3	11+22.4096	-28.1657	5794.5983
BF ABUT 3	11+23.7422	-28.1667	5794.6181
S WINGWALL	11+31.2715	-28.1657	5794.7302

LONGITUDINAL LINE: CL WEB W1

BENT LINE DESCRIPTION OR FRACTIONAL POINT DESIGNATION	STATION	OFFSET	ELEVATION
BF ABUT 1	8+90.5534	-26.7500	5791.1695
CL BRG A1	8+91.8860	-26.7500	5791.1893
F-1	8+97.7860	-26.7500	5791.2771
F-2	9+03.6860	-26.7500	5791.3649
F-3	9+09.5860	-26.7500	5791.4527
F-4	9+15.4860	-26.7500	5791.5405
F-5	9+21.3860	-26.7500	5791.6283
F-6	9+27.2860	-26.7500	5791.7161
F-7	9+33.1860	-26.7500	5791.8039
F-8	9+39.0860	-26.7500	5791.8917
F-9	9+44.9860	-26.7500	5791.9795
F-10	9+50.8860	-26.7500	5792.0673
F-11	9+56.7860	-26.7500	5792.1551
F-12	9+62.6860	-26.7500	5792.2429
F-13	9+68.5860	-26.7500	5792.3306
F-14	9+74.4860	-26.7500	5792.4184
F-15	9+80.3860	-26.7500	5792.5062
F-16	9+86.2860	-26.7500	5792.5940
F-17	9+92.1860	-26.7500	5792.6818
F-18	9+98.0860	-26.7500	5792.7696
F-19	10+03.9860	-26.7500	5792.8574
CL PIER 2	10+09.8860	-26.7500	5792.9452
F-1	10+15.4860	-26.7500	5793.0285
F-2	10+21.0860	-26.7500	5793.1118
F-3	10+26.6860	-26.7500	5793.1952
F-4	10+32.2860	-26.7500	5793.2785
F-5	10+37.8860	-26.7500	5793.3618
F-6	10+43.4860	-26.7500	5793.4452
F-7	10+49.0860	-26.7500	5793.5285
F-8	10+54.6860	-26.7500	5793.6118
F-9	10+60.2860	-26.7500	5793.6951
F-10	10+65.8860	-26.7500	5793.7785
F-11	10+71.4860	-26.7500	5793.8618
F-12	10+77.0860	-26.7500	5793.9451
F-13	10+82.6860	-26.7500	5794.0285
F-14	10+88.2860	-26.7500	5794.1118
F-15	10+93.8860	-26.7500	5794.1951
F-16	10+99.4860	-26.7500	5794.2784
F-17	11+05.0860	-26.7500	5794.3618
F-18	11+10.6860	-26.7500	5794.4451
F-19	11+16.2860	-26.7500	5794.5284
CL BRG A3	11+21.8860	-26.7500	5794.6117
BF ABUT 3	11+23.2186	-26.7500	5794.6316

LONGITUDINAL LINE: CL WEB W2

BENT LINE DESCRIPTION OR FRACTIONAL POINT DESIGNATION	STATION	OFFSET	ELEVATION
BF ABUT 1	8+87.4737	-18.4167	5791.2487
CL BRG A1	8+88.8063	-18.4167	5791.2685
F-1	8+94.7063	-18.4167	5791.3563
F-2	9+00.6063	-18.4167	5791.4441
F-3	9+06.5063	-18.4167	5791.5319
F-4	9+12.4063	-18.4167	5791.6197
F-5	9+18.3063	-18.4167	5791.7075
F-6	9+24.2063	-18.4167	5791.7953
F-7	9+30.1063	-18.4167	5791.8831
F-8	9+36.0063	-18.4167	5791.9709
F-9	9+41.9063	-18.4167	5792.0586
F-10	9+47.8063	-18.4167	5792.1464
F-11	9+53.7063	-18.4167	5792.2342
F-12	9+59.6063	-18.4167	5792.3220
F-13	9+65.5063	-18.4167	5792.4098
F-14	9+71.4063	-18.4167	5792.4976
F-15	9+77.3063	-18.4167	5792.5854
F-16	9+83.2063	-18.4167	5792.6732
F-17	9+89.1063	-18.4167	5792.7610
F-18	9+95.0063	-18.4167	5792.8488
F-19	10+00.9063	-18.4167	5792.9366
CL PIER 2	10+06.8063	-18.4167	5793.0244
F-1	10+12.4063	-18.4167	5793.1077
F-2	10+18.0063	-18.4167	5793.1910
F-3	10+23.6063	-18.4167	5793.2743
F-4	10+29.2063	-18.4167	5793.3577
F-5	10+34.8063	-18.4167	5793.4410
F-6	10+40.4063	-18.4167	5793.5243
F-7	10+46.0063	-18.4167	5793.6077
F-8	10+51.6063	-18.4167	5793.6910
F-9	10+57.2063	-18.4167	5793.7743
F-10	10+62.8063	-18.4167	5793.8576
F-11	10+68.4063	-18.4167	5793.9410
F-12	10+74.0063	-18.4167	5794.0243
F-13	10+79.6063	-18.4167	5794.1076
F-14	10+85.2063	-18.4167	5794.1910
F-15	10+90.8063	-18.4167	5794.2743
F-16	10+96.4063	-18.4167	5794.3576
F-17	11+02.0063	-18.4167	5794.4409
F-18	11+07.6063	-18.4167	5794.5243
F-19	11+13.2063	-18.4167	5794.6076
CL BRG A3	11+18.8063	-18.4167	5794.6909
BF ABUT 3	11+20.1389	-18.4167	5794.7107

LONGITUDINAL LINE: CL WEB W3

BENT LINE DESCRIPTION OR FRACTIONAL POINT DESIGNATION	STATION	OFFSET	ELEVATION
BF ABUT 1	8+84.3939	-10.0833	5791.3279
CL BRG A1	8+85.7265	-10.0833	5791.3477
F-1	8+91.6265	-10.0833	5791.4355
F-2	8+97.5265	-10.0833	5791.5233
F-3	9+03.4265	-10.0833	5791.6111
F-4	9+09.3265	-10.0833	5791.6989
F-5	9+15.2265	-10.0833	5791.7867
F-6	9+21.1265	-10.0833	5791.8744
F-7	9+27.0265	-10.0833	5791.9622
F-8	9+32.9265	-10.0833	5792.0500
F-9	9+38.8265	-10.0833	5792.1378
F-10	9+44.7265	-10.0833	5792.2256
F-11	9+50.6265	-10.0833	5792.3134
F-12	9+56.5265	-10.0833	5792.4012
F-13	9+62.4265	-10.0833	5792.4890
F-14	9+68.3265	-10.0833	5792.5768
F-15	9+74.2265	-10.0833	5792.6646
F-16	9+80.1265	-10.0833	5792.7524
F-17	9+86.0265	-10.0833	5792.8402
F-18	9+91.9265	-10.0833	5792.9279
F-19	9+97.8265	-10.0833	5793.0157
CL PIER 2	10+03.7265	-10.0833	5793.1035
F-1	10+09.3265	-10.0833	5793.1869
F-2	10+14.9265	-10.0833	5793.2702
F-3	10+20.5265	-10.0833	5793.3535
F-4	10+26.1265	-10.0833	5793.4368
F-5	10+31.7265	-10.0833	5793.5202
F-6	10+37.3265	-10.0833	5793.6035
F-7	10+42.9265	-10.0833	5793.6868
F-8	10+48.5265	-10.0833	5793.7702
F-9	10+54.1265	-10.0833	5793.8535
F-10	10+59.7265	-10.0833	5793.9368
F-11	10+65.3265	-10.0833	5794.0201
F-12	10+70.9265	-10.0833	5794.1035
F-13	10+76.5265	-10.0833	5794.1868
F-14	10+82.1265	-10.0833	5794.2701
F-15	10+87.7265	-10.0833	5794.3535
F-16	10+93.3265	-10.0833	5794.4368
F-17	10+98.9265	-10.0833	5794.5201
F-18	11+04.5265	-10.0833	5794.6034
F-19	11+10.1265	-10.0833	5794.6868
CL BRG A3	11+15.7265	-10.0833	5794.7701
BF ABUT 3	11+17.0591	-10.0833	5794.7899

LONGITUDINAL LINE: CL WEB #4

BENT LINE DESCRIPTION OR FRACTIONAL POINT DESIGNATION	STATION	OFFSET	ELEVATION
BF ABUT 1	8+81.3141	-1.7500	5791.4070
CL BRG A1	8+82.6467	-1.7500	5791.4269
F-1	8+88.5467	-1.7500	5791.5147
F-2	8+94.4467	-1.7500	5791.6025
F-3	9+00.3467	-1.7500	5791.6902
F-4	9+06.2467	-1.7500	5791.7780
F-5	9+12.1467	-1.7500	5791.8658
F-6	9+18.0467	-1.7500	5791.9536
F-7	9+23.9467	-1.7500	5792.0414
F-8	9+29.8467	-1.7500	5792.1292
F-9	9+35.7467	-1.7500	5792.2170
F-10	9+41.6467	-1.7500	5792.3048
F-11	9+47.5467	-1.7500	5792.3926
F-12	9+53.4467	-1.7500	5792.4804
F-13	9+59.3467	-1.7500	5792.5682
F-14	9+65.2467	-1.7500	5792.6560
F-15	9+71.1467	-1.7500	5792.7437
F-16	9+77.0467	-1.7500	5792.8315
F-17	9+82.9467	-1.7500	5792.9193
F-18	9+88.8467	-1.7500	5793.0071
F-19	9+94.7467	-1.7500	5793.0949
CL PIER 2	10+00.6467	-1.7500	5793.1827
F-1	10+06.2467	-1.7500	5793.2660
F-2	10+11.8467	-1.7500	5793.3494
F-3	10+17.4467	-1.7500	5793.4327
F-4	10+23.0467	-1.7500	5793.5160
F-5	10+28.6467	-1.7500	5793.5993
F-6	10+34.2467	-1.7500	5793.6827
F-7	10+39.8467	-1.7500	5793.7660
F-8	10+45.4467	-1.7500	5793.8493
F-9	10+51.0467	-1.7500	5793.9327
F-10	10+56.6467	-1.7500	5794.0160
F-11	10+62.2467	-1.7500	5794.0993
F-12	10+67.8467	-1.7500	5794.1826
F-13	10+73.4467	-1.7500	5794.2660
F-14	10+79.0467	-1.7500	5794.3493
F-15	10+84.6467	-1.7500	5794.4326
F-16	10+90.2467	-1.7500	5794.5160
F-17	10+95.8467	-1.7500	5794.5993
F-18	11+01.4467	-1.7500	5794.6826
F-19	11+07.0467	-1.7500	5794.7659
CL BRG A3	11+12.6467	-1.7500	5794.8493
BF ABUT 3	11+13.9793	-1.7500	5794.8691

LONGITUDINAL LINE: PROFILE LINE

BENT LINE DESCRIPTION OR FRACTIONAL POINT DESIGNATION	STATION	OFFSET	ELEVATION
BF ABUT 1	8+86.6674	0.0000	5791.4237
CL BRG A1	8+92.0000	0.0000	5791.4435
F-1	8+97.9000	0.0000	5791.5313
F-2	9+03.8000	0.0000	5791.6191
F-3	9+09.7000	0.0000	5791.7069
F-4	9+05.6000	0.0000	5791.7947
F-5	9+11.5000	0.0000	5791.8825
F-6	9+17.4000	0.0000	5791.9702
F-7	9+23.3000	0.0000	5792.0580
F-8	9+29.2000	0.0000	5792.1458
F-9	9+35.1000	0.0000	5792.2336
F-10	9+41.0000	0.0000	5792.3213
F-11	9+46.9000	0.0000	5792.4092
F-12	9+52.8000	0.0000	5792.4970
F-13	9+58.7000	0.0000	5792.5848
F-14	9+64.6000	0.0000	5792.6726
F-15	9+70.5000	0.0000	5792.7604
F-16	9+76.4000	0.0000	5792.8482
F-17	9+82.3000	0.0000	5792.9360
F-18	9+88.2000	0.0000	5793.0237
F-19	9+94.1000	0.0000	5793.1115
CL PIER 2	10+00.0000	0.0000	5793.1993
F-1	10+05.6000	0.0000	5793.2827
F-2	10+11.2000	0.0000	5793.3660
F-3	10+16.8000	0.0000	5793.4493
F-4	10+22.4000	0.0000	5793.5326
F-5	10+28.0000	0.0000	5793.6160
F-6	10+33.6000	0.0000	5793.6993
F-7	10+39.2000	0.0000	5793.7826
F-8	10+44.8000	0.0000	5793.8660
F-9	10+50.4000	0.0000	5793.9493
F-10	10+56.0000	0.0000	5794.0326
F-11	10+61.6000	0.0000	5794.1159
F-12	10+67.2000	0.0000	5794.1993
F-13	10+72.8000	0.0000	5794.2826
F-14	10+78.4000	0.0000	5794.3659
F-15	10+84.0000	0.0000	5794.4493
F-16	10+89.6000	0.0000	5794.5326
F-17	10+95.2000	0.0000	5794.6159
F-18	11+00.8000	0.0000	5794.6992
F-19	11+06.4000	0.0000	5794.7826
CL BRG A3	11+12.0000	0.0000	5794.8659
BF ABUT 3	11+13.3326	0.0000	5794.8857

LONGITUDINAL LINE: CL WEB #5

BENT LINE DESCRIPTION OR FRACTIONAL POINT DESIGNATION	STATION	OFFSET	ELEVATION
BF ABUT 1	8+78.2344	6.5833	5791.2887
CL BRG A1	8+79.5670	6.5833	5791.3085
F-1	8+85.4670	6.5833	5791.3963
F-2	8+91.3670	6.5833	5791.4841
F-3	8+97.2670	6.5833	5791.5719
F-4	9+03.1670	6.5833	5791.6597
F-5	9+09.0670	6.5833	5791.7475
F-6	9+14.9670	6.5833	5791.8353
F-7	9+20.8670	6.5833	5791.9231
F-8	9+26.7670	6.5833	5792.0109
F-9	9+32.6670	6.5833	5792.0987
F-10	9+38.5670	6.5833	5792.1865
F-11	9+44.4670	6.5833	5792.2743
F-12	9+50.3670	6.5833	5792.3620
F-13	9+56.2670	6.5833	5792.4498
F-14	9+62.1670	6.5833	5792.5376
F-15	9+68.0670	6.5833	5792.6254
F-16	9+73.9670	6.5833	5792.7132
F-17	9+79.8670	6.5833	5792.8010
F-18	9+85.7670	6.5833	5792.8888
F-19	9+91.6670	6.5833	5792.9766
CL PIER 2	9+97.5670	6.5833	5793.0644
F-1	10+03.1670	6.5833	5793.1477
F-2	10+08.7670	6.5833	5793.2310
F-3	10+14.3670	6.5833	5793.3144
F-4	10+19.9670	6.5833	5793.3977
F-5	10+25.5670	6.5833	5793.4810
F-6	10+31.1670	6.5833	5793.5643
F-7	10+36.7670	6.5833	5793.6477
F-8	10+42.3670	6.5833	5793.7310
F-9	10+47.9670	6.5833	5793.8143
F-10	10+53.5670	6.5833	5793.8977
F-11	10+59.1670	6.5833	5793.9810
F-12	10+64.7670	6.5833	5794.0643
F-13	10+70.3670	6.5833	5794.1476
F-14	10+75.9670	6.5833	5794.2310
F-15	10+81.5670	6.5833	5794.3143
F-16	10+87.1670	6.5833	5794.3976
F-17	10+92.7670	6.5833	5794.4810
F-18	10+98.3670	6.5833	5794.5643
F-19	11+03.9670	6.5833	5794.6476
CL BRG A3	11+09.5670	6.5833	5794.7309
BF ABUT 3	11+10.8996	6.5833	5794.7508

NOTE: ELEVATIONS ARE AT TOP OF CONCRETE DECK 0.1667 FEET BELOW FINISHED GRADE.

	INITIAL	
DESIGNED BY	R.K.M.	4/82
CHECKED BY	J.M.N.	4/82
DETAILED BY	F.K.	4/82
CHECKED BY	A.M.	4/82
QUANTITIES BY	R.J.	4/82
CHECKED BY	J.P.L.	4/82

DIVISION OF HIGHWAYS

DANIELS PARK ROAD
OVER S.H. 470

BRIDGE DECK ELEVATIONS

Designer R. MOY		Structure Numbers	F-17-HR
Detailer F. KREINER			
Drawing Number 818	of 20	Drawings	

STATE DEPARTMENT OF HIGHWAYS
DIVISION OF HIGHWAYS STATE OF COLORADO

	INITIAL	DATE			
DESIGNED BY	R.K.M.	4/82	CHECKED BY	A.M.	4/82
CHECKED BY	J.M.N.	4/82	QUANTITIES BY	P.J.	4/82
DETAILED BY	F.K.	4/82	CHECKED BY	J.P.L.	4/82

LONGITUDINAL LINE: CL WEB W6

BENT LINE DESCRIPTION OR FRACTIONAL POINT DESIGNATION	STATION	OFFSET	ELEVATION
BF ABUT 1	8+75.1546	14.9157	5791.1179
CL BRG A1	8+76.4872	14.9157	5791.1377
F-1	8+82.3872	14.9167	5791.2255
F-2	8+88.2872	14.9157	5791.3133
F-3	8+94.1872	14.9157	5791.4011
F-4	9+00.0872	14.9157	5791.4889
F-5	9+05.9872	14.9157	5791.5767
F-6	9+11.8872	14.9157	5791.6645
F-7	9+17.7872	14.9167	5791.7523
F-8	9+23.6872	14.9157	5791.8400
F-9	9+29.5872	14.9157	5791.9278
F-10	9+35.4872	14.9157	5792.0156
F-11	9+41.3872	14.9157	5792.1034
F-12	9+47.2872	14.9157	5792.1912
F-13	9+53.1872	14.9157	5792.2790
F-14	9+59.0872	14.9167	5792.3668
F-15	9+64.9872	14.9157	5792.4546
F-16	9+70.8872	14.9167	5792.5424
F-17	9+76.7872	14.9157	5792.6302
F-18	9+82.6872	14.9157	5792.7180
F-19	9+88.5872	14.9157	5792.8058
CL PIER 2	9+94.4872	14.9167	5792.8936
F-1	10+00.0872	14.9167	5792.9769
F-2	10+05.6872	14.9167	5793.0602
F-3	10+11.2872	14.9157	5793.1435
F-4	10+16.8872	14.9157	5793.2269
F-5	10+22.4872	14.9167	5793.3102
F-6	10+28.0872	14.9157	5793.3935
F-7	10+33.6872	14.9157	5793.4768
F-8	10+39.2872	14.9167	5793.5602
F-9	10+44.8872	14.9157	5793.6435
F-10	10+50.4872	14.9157	5793.7268
F-11	10+56.0872	14.9157	5793.8102
F-12	10+61.6872	14.9167	5793.8935
F-13	10+67.2872	14.9157	5793.9768
F-14	10+72.8872	14.9157	5794.0601
F-15	10+78.4872	14.9167	5794.1435
F-16	10+84.0872	14.9167	5794.2268
F-17	10+89.6872	14.9157	5794.3101
F-18	10+95.2872	14.9157	5794.3935
F-19	11+00.8872	14.9167	5794.4768
CL BRG A3	11+06.4872	14.9157	5794.5601
BF ABUT 3	11+07.8198	14.9157	5794.5799

LONGITUDINAL LINE: CL WEB W7

BENT LINE DESCRIPTION OR FRACTIONAL POINT DESIGNATION	STATION	OFFSET	ELEVATION
BF ABUT 1	8+72.0749	23.2530	5790.9471
CL BRG A1	8+73.4075	23.2530	5790.9669
F-1	8+79.3075	23.2530	5791.0547
F-2	8+85.2075	23.2530	5791.1425
F-3	8+91.1075	23.2500	5791.2303
F-4	8+97.0075	23.2500	5791.3181
F-5	9+02.9075	23.2530	5791.4058
F-6	9+08.8075	23.2500	5791.4936
F-7	9+14.7075	23.2500	5791.5814
F-8	9+20.6075	23.2530	5791.6692
F-9	9+26.5075	23.2500	5791.7570
F-10	9+32.4075	23.2530	5791.8448
F-11	9+38.3075	23.2530	5791.9326
F-12	9+44.2075	23.2530	5792.0204
F-13	9+50.1075	23.2500	5792.1082
F-14	9+56.0075	23.2530	5792.1960
F-15	9+61.9075	23.2530	5792.2838
F-16	9+67.8075	23.2500	5792.3716
F-17	9+73.7075	23.2530	5792.4594
F-18	9+79.6075	23.2530	5792.5471
F-19	9+85.5075	23.2500	5792.6349
CL PIER 2	9+91.4075	23.2500	5792.7227
F-1	9+97.0075	23.2530	5792.8061
F-2	10+02.6075	23.2530	5792.8894
F-3	10+08.2075	23.2530	5792.9727
F-4	10+13.8075	23.2530	5793.0560
F-5	10+19.4075	23.2500	5793.1394
F-6	10+25.0075	23.2530	5793.2227
F-7	10+30.6075	23.2530	5793.3060
F-8	10+36.2075	23.2530	5793.3894
F-9	10+41.8075	23.2530	5793.4727
F-10	10+47.4075	23.2530	5793.5560
F-11	10+53.0075	23.2530	5793.6393
F-12	10+58.6075	23.2530	5793.7227
F-13	10+64.2075	23.2530	5793.8060
F-14	10+69.8075	23.2500	5793.8893
F-15	10+75.4075	23.2500	5793.9726
F-16	10+81.0075	23.2500	5794.0560
F-17	10+86.6075	23.2530	5794.1393
F-18	10+92.2075	23.2500	5794.2226
F-19	10+97.8075	23.2530	5794.3060
CL BRG A3	11+03.4075	23.2510	5794.3893
BF ABUT 3	11+04.7401	23.2530	5794.4091

LONGITUDINAL LINE: SIDEWALK CURB

BENT LINE DESCRIPTION OR FRACTIONAL POINT DESIGNATION	STATION	OFFSET	ELEVATION
N WINGWALL	8+51.0531	30.0030	5790.6818
BF ABUT 1	8+69.5803	30.0000	5790.8087
CL BRG A1	8+70.9129	30.0000	5790.8265
X-1	8+75.7042	30.0000	5790.8998
X-2	8+81.6042	30.0030	5790.9876
X-3	8+87.5042	30.0030	5791.0754
X-4	8+93.4042	30.0030	5791.1632
X-5	8+99.3042	30.0030	5791.2510
X-6	9+05.2042	30.0000	5791.3388
X-7	9+11.1042	30.0030	5791.4266
X-8	9+17.0042	30.0030	5791.5144
X-9	9+22.9042	30.0000	5791.6021
X-10	9+28.8042	30.0030	5791.6899
X-11	9+34.7042	30.0030	5791.7777
X-12	9+40.6042	30.0030	5791.8655
X-13	9+46.5042	30.0030	5791.9533
X-14	9+52.4042	30.0030	5792.0411
X-15	9+58.3042	30.0030	5792.1289
X-16	9+64.2042	30.0030	5792.2167
X-17	9+70.1042	30.0030	5792.3045
X-18	9+76.0042	30.0000	5792.3923
X-19	9+81.9042	30.0000	5792.4801
CL PIER 2	9+88.9129	30.0000	5792.5844
X-1	9+93.4042	30.0000	5792.6512
X-2	9+99.0042	30.0030	5792.7345
X-3	10+04.6042	30.0030	5792.8178
X-4	10+10.2042	30.0000	5792.9012
X-5	10+15.8042	30.0030	5792.9845
X-6	10+21.4042	30.0000	5793.0678
X-7	10+27.0042	30.0030	5793.1512
X-8	10+32.6042	30.0030	5793.2345
X-9	10+38.2042	30.0000	5793.3178
X-10	10+43.8042	30.0000	5793.4011
X-11	10+49.4042	30.0030	5793.4845
X-12	10+55.0042	30.0000	5793.5678
X-13	10+60.6042	30.0000	5793.6511
X-14	10+66.2042	30.0030	5793.7345
X-15	10+71.8042	30.0030	5793.8178
X-16	10+77.4042	30.0030	5793.9011
X-17	10+83.0042	30.0000	5793.9844
X-18	10+88.6042	30.0030	5794.0678
X-19	10+94.2042	30.0030	5794.1511
CL BRG A3	11+00.9129	30.0030	5794.2509
BF ABUT 3	11+02.2455	30.0030	5794.2707
S WINGWALL	11+09.7211	30.0030	5794.3820

LONGITUDINAL LINE: CL WEB W8

BENT LINE DESCRIPTION OR FRACTIONAL POINT DESIGNATION	STATION	OFFSET	ELEVATION
BF ABUT 1	8+68.9952	31.5833	5790.7762
CL BRG A1	8+70.3278	31.5833	5790.7961
F-1	8+76.2278	31.5833	5790.8839
F-2	8+82.1278	31.5833	5790.9716
F-3	8+88.0278	31.5833	5791.0594
F-4	8+93.9278	31.5833	5791.1472
F-5	8+99.8278	31.5833	5791.2350
F-6	9+05.7278	31.5833	5791.3228
F-7	9+11.6278	31.5833	5791.4106
F-8	9+17.5278	31.5833	5791.4984
F-9	9+23.4278	31.5833	5791.5862
F-10	9+29.3278	31.5833	5791.6740
F-11	9+35.2278	31.5833	5791.7618
F-12	9+41.1278	31.5833	5791.8496
F-13	9+47.0278	31.5833	5791.9374
F-14	9+52.9278	31.5833	5792.0251
F-15	9+58.8278	31.5833	5792.1129
F-16	9+64.7278	31.5833	5792.2007
F-17	9+70.6278	31.5833	5792.2885
F-18	9+76.5278	31.5833	5792.3763
F-19	9+82.4278	31.5833	5792.4641
CL PIER 2	9+88.3278	31.5833	5792.5519
F-1	9+93.9278	31.5833	5792.6352
F-2	9+99.5278	31.5833	5792.7186
F-3	10+05.1278	31.5833	5792.8019
F-4	10+10.7278	31.5833	5792.8852
F-5	10+16.3278	31.5833	5792.9685
F-6	10+21.9278	31.5833	5793.0519
F-7	10+27.5278	31.5833	5793.1352
F-8	10+33.1278	31.5833	5793.2185
F-9	10+38.7278	31.5833	5793.3019
F-10	10+44.3278	31.5833	5793.3852
F-11	10+49.9278	31.5833	5793.4685
F-12	10+55.5278	31.5833	5793.5518
F-13	10+61.1278	31.5833	5793.6352
F-14	10+66.7278	31.5833	5793.7185
F-15	10+72.3278	31.5833	5793.8019
F-16	10+77.9278	31.5833	5793.8851
F-17	10+83.5278	31.5833	5793.9685
F-18	10+89.1278	31.5833	5794.0518
F-19	10+94.7278	31.5833	5794.1351
CL BRG A3	11+00.3278	31.5833	5794.2185
BF ABUT 3	11+01.6604	31.5833	5794.2383

LONGITUDINAL LINE: CL RIGHT WING

BENT LINE DESCRIPTION OR FRACTIONAL POINT DESIGNATION	STATION	OFFSET	ELEVATION
N WINGWALL	8+51.0531	33.0030	5790.6368
BF ABUT 1	8+68.4716	33.0000	5790.7472
CL BRG A1	8+69.8042	33.0030	5790.7670
CL BRG A3	10+99.8042	33.0030	5794.1694
BF ABUT 3	11+01.1368	33.0030	5794.2392
S WINGWALL	11+09.7211	33.0030	5794.3370

LONGITUDINAL LINE: RIGHT EDGE DECK

BENT LINE DESCRIPTION OR FRACTIONAL POINT DESIGNATION	STATION	OFFSET	ELEVATION
N WINGWALL	8+51.0531	35.8333	5790.5943
BF ABUT 1	8+67.4245	35.8333	5790.6891
CL BRG A1	8+68.7571	35.8333	5790.7089
X-1	8+75.7042	35.8333	5790.8123
X-2	8+81.6042	35.8333	5790.9001
X-3	8+87.5042	35.8333	5790.9879
X-4	8+93.4042	35.8333	5791.0757
X-5	8+99.3042	35.8333	5791.1635
X-6	9+05.2042	35.8333	5791.2513
X-7	9+11.1042	35.8333	5791.3391
X-8	9+17.0042	35.8333	5791.4269
X-9	9+22.9042	35.8333	5791.5146
X-10	9+28.8042	35.8333	5791.6024
X-11	9+34.7042	35.8333	5791.6902
X-12	9+40.6042	35.8333	5791.7780
X-13	9+46.5042	35.8333	5791.8658
X-14	9+52.4042	35.8333	5791.9536
X-15	9+58.3042	35.8333	5792.0414
X-16	9+64.2042	35.8333	5792.1292
X-17	9+70.1042	35.8333	5792.2170
X-18	9+76.0042	35.8333	5792.3048
X-19	9+81.9042	35.8333	5792.3926
CL PIER 2	9+86.7571	35.8333	5792.4648
X-1	9+93.4042	35.8333	5792.5637
X-2	9+99.0042	35.8333	5792.6470
X-3	10+04.6042	35.8333	5792.7303
X-4	10+10.2042	35.8333	5792.8137
X-5	10+15.8042	35.8333	5792.8970
X-6	10+21.4042	35.8333	5792.9803
X-7	10+27.0042	35.8333	5793.0637
X-8	10+32.6042	35.8333	5793.1470
X-9	10+38.2042	35.8333	5793.2303
X-10	10+43.8042	35.8333	5793.3136
X-11	10+49.4042	35.8333	5793.3970
X-12	10+55.0042	35.8333	5793.4803
X-13	10+60.6042	35.8333	5793.5636
X-14	10+66.2042	35.8333	5793.6470
X-15	10+71.8042	35.8333	5793.7303
X-16	10+77.4042	35.8333	5793.8136
X-17	10+83.0042	35.8333	5793.8969
X-18	10+88.6042	35.8333	5793.9803
X-19	10+94.2042	35.8333	5794.0636
CL BRG A3	10+98.7571	35.8333	5794.1313
BF ABUT 3	11+00.0897	35.8333	5794.1512
S WINGWALL	11+09.7211	35.8333	5794.2945

FEDERAL ROAD REGION NO.	DIVISION	PROJ. NO.	SHEET NO.	TOTAL SHEETS
VIII	COLORADO	IXFU 470-1(9)	29	

REVISIONS

	DATE	DESCRIPTION	BY
2-1	3/26/84	REVISED B-16 DRAWING	LGH

AS CONSTRUCTED

NO REVISIONS REVISED VOID 7-11-85

BRIDGE STANDARD 2

BENT LINE DESCRIPTION OR FRACTIONAL POINT DESIGNATION	STATION	OFFSET	ELEVATION

NOTE: ELEVATIONS ARE AT TOP OF CONCRETE DECK 0.1667 FEET BELOW FINISHED GRADE.

DIVISION OF HIGHWAYS

DANIELS PARK ROAD
OVER S.H. 470

BRIDGE DECK ELEVATIONS

Designer	R Moy	Structure Numbers	F - 17 - HR
Detailer	F Kreiner		

Drawing Number B19 of 20 Drawings

AS CONSTRUCTED				
NO REVISIONS	7-11-85	REVISED		VOID

FEDERAL ROAD REGION NO	DIVISION	PROJ. NO.	SHEET NO.	TOTAL SHEETS
VIII	COLORADO	IXFU 470-1(9)	30	

REVISIONS

BRIDGE STANDARD 1

ROADWAY APPROACHES

ELEVATIONS ARE AT FINISHED GRADE

ELEVATIONS ON ROADWAY APPROACHES (AT FINISHED GRADE)

STATION	OFFSETS -30.0000	-24.0000	0.0000	24.0000	30.0000
7+30.0	5789.66	5789.75	5790.11	5789.75	5789.66
+40.0	89.70	89.79	90.15	89.79	89.70
+50.0	89.74	89.83	90.19	89.83	89.74
+60.0	89.79	89.88	90.24	89.88	89.79
7+70.0	5789.84	5789.93	5790.29	5789.93	5789.84
+80.0	89.91	90.00	90.36	90.00	89.91
+90.0	89.99	90.08	90.44	90.08	89.99
8+00.0	90.08	90.17	90.53	90.17	90.08
8+10.0	5790.18	5790.27	5790.63	5790.27	5790.18
+20.0	90.29	90.38	90.74	90.38	90.29
+30.0	90.41	90.50	90.86	90.50	90.41
+40.0	90.54	90.63	90.99	90.63	90.54
8+50.0	5790.68	5790.77	5791.13	5790.77	5790.68
+60.0	90.83	90.92	91.28	90.92	90.83
+70.0	90.98	91.07	91.43	91.07	90.98
+80.0	91.13	91.22	91.58	91.22	91.13

ELEVATIONS ON ROADWAY APPROACHES (AT FINISHED GRADE)

STATION	OFFSETS -30.0000	-24.0000	0.0000	24.0000	30.0000
10+20.0	5794.70	5794.79	5795.15	5794.79	5794.70
+30.0	94.85	94.94	95.30	94.94	94.85
+40.0	95.00	95.09	95.45	95.09	95.00
+50.0	95.15	95.24	95.60	95.24	95.15
11+60.0	5795.30	5795.39	5795.75	5795.39	5795.30
+70.0	95.45	95.54	95.90	95.54	95.45
+80.0	95.59	95.68	96.04	95.68	95.59
+90.0	95.74	95.83	96.19	95.83	95.74
12+00.0	5795.89	5795.98	5796.34	5795.98	5795.89
+10.0	96.04	96.13	96.49	96.13	96.04
+20.0	96.20	96.29	96.65	96.29	96.20
+30.0	96.36	96.45	96.81	96.45	96.36

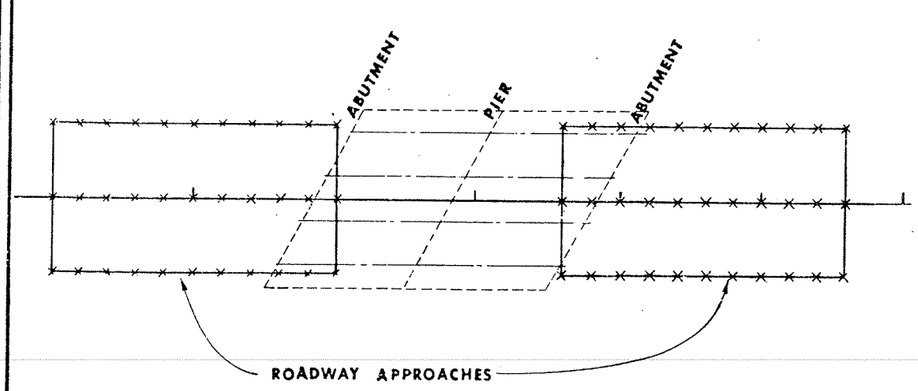

* TANGENT ALIGNMENT

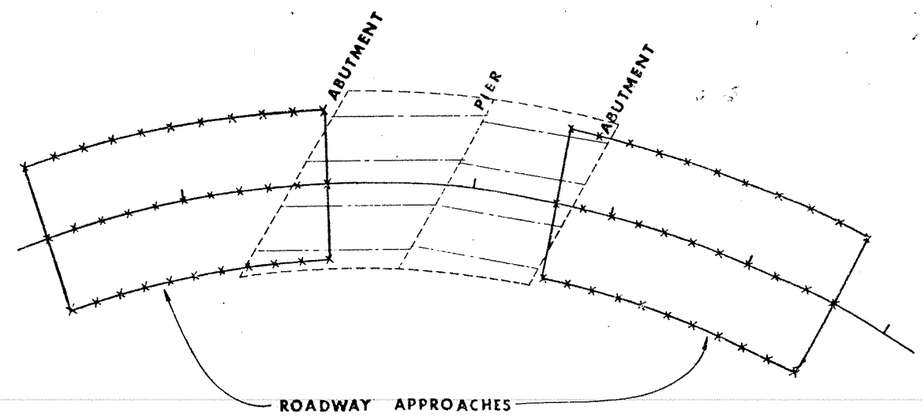

* HORIZONTAL CURVE ALIGNMENT

* THESE DRAWINGS ARE SCHEMATICS ONLY AND DO NOT NECESSARILY REFLECT THE ACTUAL BRIDGE LAYOUT.

	INITIAL	DATE			
DESIGNED BY	R.K.M.	4/82	CHECKED BY	A.M.	4/82
CHECKED BY	J.M.N.	4/82	QUANTITIES BY	P.J.	4/82
DETAILED BY	F.K.	4/82	CHECKED BY	J.P.L.	4/82

DIVISION OF HIGHWAYS

DANIELS PARK ROAD
OVER S.H. 470

ROADWAY APPROACHES

Designer		Structure	F-17-HR
Detailer	F. Kreiser	Members	
Drawing Number B20		of 20	Drawings

1