AS CONSTRUCTED					
NO REVISIONS		REVISED		VOID	

FEDERAL ROAD REGION NO.	DIVISION	PROJECT NUMBER	SHEET NUMBER
VIII	COLORADO	1A06/1802	111

REVISIONS		
- -		
- -		
- -		

GENERAL NOTES

ALL WORK SHALL BE DONE ACCORDING TO THE STANDARD SPECIFICATIONS OF THE DIVISION OF HIGHWAYS, STATE OF COLORADO, APPLICABLE TO THE PROJECT.

STRUCTURE EXCAVATION AND BACKFILL SHALL BE IN ACCORDANCE WITH STANDARD M-206-2 UNLESS OTHERWISE NOTED. ADEQUATE SHORING OF THE EXCAVATION ADJACENT TO EXISTING ROADWAYS SHALL BE PROVIDED DURING ALL PHASES OF CONSTRUCTION. METHOD OF SHORING SHALL BE SUBMITTED TO THE ENGINEER PRIOR TO EXCAVATION. PAYMENT FOR SHORING TO BE INCLUDED IN ITEM 206 STRUCTURE EXCAVATION.

EXPANSION JOINT MATERIAL SHALL MEET AASHTO SPECIFICATION M-213.

THE FOLLOWING STRUCTURAL STEEL SHALL BE AASHTO M-183 (ASTM A-36): INTERIOR BRACING OF BOX GIRDERS (INTERIOR CROSS-FRAMES, LATERAL BRACING AT TOP FLANGE, AND GUSSET PLATES) AND TEMPORARY ERECTION CROSS FRAMES BETWEEN BOX GIRDERS.

THE FOLLOWING STRUCTURAL STEEL SHALL BE AASHTO M-223 (ASTM A-572 GRADE 50): BOX GIRDER WEBS, FLANGES, TRANSVERSE WEB STIFFENERS, ALL SPLICE MATERIAL, LONGITUDINAL FLANGE STIFFENERS, DIAPHRAGM WEBS AND STIFFENERS, AND BEARING STIFFENERS.

FOLLOWING MEMBERS SHALL BE FRACTURE CRITICAL: ALL STRUCTURAL ELEMENTS USING AASHTO M-223 (ASTM A-572) STEEL AND ANY MEMBER INDICATED AS (FCM) IN THESE DRAWINGS.

ALL BOLTS SHALL BE ⅞ INCH DIAMETER, AASHTO M-164 (ASTM A-325) HIGH STRENGTH, UNLESS OTHERWISE NOTED.

NO WELDING OF ANY ATTACHMENT SHALL BE PERMITTED ON THE FLANGES OF STEEL GIRDERS UNLESS SPECIFICALLY CALLED FOR ON THE PLANS. ALL GROOVE WELDS SHALL BE ULTRASONICALLY TESTED AS PER SECTION 6.7 OF ANSI/AASHTO/AWS D1.5-88.

ALL STEEL, NOT OTHERWISE NOTED, SHALL BE PAINTED IN ACCORDANCE WITH SECTION 509 OF THE STANDARD SPECIFICATIONS. THE COLOR (DARK TAN) SHALL MATCH THE EXISTING FLYOVER BRIDGES (RAMPS B AND C) AND IS TO BE SELECTED FROM TEST PANELS PROVIDED BY THE CONTRACTOR.

GRADE 60 REINFORCING STEEL IS REQUIRED FOR #4 BARS AND LARGER. ALL REINFORCING STEEL SHALL BE EPOXY COATED, UNLESS NOTED OTHERWISE.

THE FOLLOWING TABLE GIVES THE MINIMUM CLASS B LAP SPLICE LENGTH FOR EPOXY COATED REINFORCING BARS.

BAR SIZE	#4	#5	#6	#7	#8	#9	#10	#11
SPLICE LENGTH FOR CLASS B CONCRETE	1'-3"	1'-6"	2'-0"	2'-8"	3'-9"	4'-5"	5'-7"	6'-10"
SPLICE LENGTH FOR CLASS D CONCRETE	1'-3"	1'-6"	1'-10"	2'-2"	2'-10"	3'-7"	4'-7"	5'-7"

THE ABOVE SPLICE LENGTHS SHALL BE INCREASED BY 20 PERCENT FOR 3 BAR BUNDLES AND 33 PERCENT FOR 4 BAR BUNDLES.

A COLORED STRUCTURAL COATING (ACRYLIC) WILL BE REQUIRED ON ALL EXPOSED CONCRETE SURFACES DOWN TO 1'-0" BELOW GROUND LINE. THE COLOR (LIGHT BUFF) SHALL MATCH THE EXISTING FLYOVER BRIDGES (RAMPS B AND C) AND IS TO BE SELECTED FROM TEST PANELS PROVIDED BY THE CONTRACTOR. REQUIREMENTS FOR COATING ARE GIVEN IN REVISION OF SECTION 601, STRUCTURAL CONCRETE (COATING).

THE CONTRACTOR SHALL BE RESPONSIBLE FOR THE STABILITY OF THE STRUCTURE DURING CONSTRUCTION.

FOR STRUCTURE NUMBER INSTALLATION, SEE STANDARD S-614-12.

PERMANENT STEEL DECK FORMS ARE REQUIRED FOR ALL INTERIOR SLAB SPANS AS SHOWN IN THE TYPICAL SECTION, BUT SHALL NOT BE USED ON THE EXTERIOR CANTILEVERS. FORMS SHALL NOT BE ATTACHED TO THE STEEL BOX GIRDERS BY WELDING.

THE INFORMATION SHOWN ON THESE PLANS CONCERNING TYPE AND LOCATION OF UNDERGROUND UTILITIES IS NOT GUARANTEED TO BE ACCURATE OR ALL INCLUSIVE. THE CONTRACTOR IS RESPONSIBLE FOR MAKING HIS OWN DETERMINATION AS TO THE TYPE AND LOCATION OF UNDERGROUND UTILITIES AS MAY BE NECESSARY TO AVOID DAMAGE THERETO.

THE FOLLOWING ARE STANDARD ABBREVIATIONS:

E.F. = EACH FACE
F.F. = FAR FACE
N.F. = NEAR FACE
H.C.L. = HORIZONTAL CONTROL LINE
H.B.P. = HOT BITUMINOUS PAVEMENT
E.W. = EACH WAY
T.F. = TOP FACE
B.F. = BOTTOM FACE
CONT. = CONTINUOUS
(B) = BLACK REINFORCING BAR (DENOTES NON-EPOXY COATED REINFORCING BAR)

STEEL FRAMING AND GIRDER DIMENSIONS ARE BASED ON A TEMPERATURE OF 40°F.

ANY CONSTRUCTION JOINTS AND/OR REINFORCING BAR SPLICES NOT SHOWN ON THE PLANS, BUT PROPOSED BY THE CONTRACTOR, SHALL BE APPROVED BY THE ENGINEER.

DESIGN NOTES

CURRENT AASHTO SPECIFICATIONS:

LIVE LOAD : AASHTO HS-20-44 AND INTERSTATE ALTERNATE
DEAD LOAD : ASSUMES 48 LBS. PER SQ. FT. FOR BITUMINOUS PAVEMENT
ASSUMES 12 LBS. PER SQ. FT. FOR STAY-IN-PLACE CONCRETE FORMWORK

REINFORCED CONCRETE:
CLASS B CONCRETE: fc = 1,200 psi, n = 9, f'c = 3,000 psi AT 28 DAYS
CLASS D CONCRETE: fc = 1,800 psi, n = 8, f'c = 4,500 psi AT 28 DAYS

REINFORCING STEEL: #4 BARS AND LARGER: fs = 24,000 psi, fy = 60,000 psi

STRUCTURAL STEEL: AASHTO M-183 (ASTM A-36) fs = 20,000 psi, Fy = 36,000 psi
AASHTO M-222 (ASTM A-572) fs = 27,000 psi, Fy = 50,000 psi

PRESTRESSING STEEL: HIGH STRENGTH SEVEN-WIRE STRAND CONFORMING TO THE REQUIREMENTS OF AASHTO M203, GRADE 270 AND SHALL BE LOW-RELAXATION CONFORMING TO SUPPLEMENT I OF M203.

DESIGN METHOD:

SUPERSTRUCTURE: SERVICE LOAD DESIGN (WORKING STRESS)

SUBSTRUCTURE: SERVICE LOAD (WORKING STRESS) EXCEPT LOAD FACTOR DESIGN FOR PIER COLUMNS AND CAISSONS.

INDEX OF DRAWINGS

DWG. NO.	DESCRIPTION
B-1	GENERAL INFORMATION
B-2	SUMMARY OF QUANTITIES SHEET
B-3	GENERAL LAYOUT
B-4	GENERAL LAYOUT
B-5	ENGINEERING GEOLOGY
B-6	CONSTRUCTION AND CAISSON LAYOUT
B-7	CONSTRUCTION AND CAISSON LAYOUT
B-8	CAISSON DETAILS
B-9	ABUTMENT #1 & #6 PLAN, ELEVATION & SECTION
B-10	WINGWALL DETAILS
B-11	MISCELLANEOUS ABUTMENT & WINGWALL DETAILS
B-12	PIER #2, #3 AND #5 DETAILS
B-13	CARRIER BEAM DETAILS AT PIER #4
B-14	PIER #4 DETAILS
B-15	FRAMING PLAN AND GIRDER ELEVATION
B-16	FRAMING PLAN AND GIRDER ELEVATION
B-17	FRAMING PLAN AND GIRDER ELEVATION
B-18	CAMBER CUTTING DIAGRAM
B-19	CAMBER CUTTING DIAGRAM
B-20	INTERMEDIATE STIFFENERS AND CROSSFRAME DETAILS
B-21	END DIAPHRAGM DETAILS, ABUTMENT #1 & #6
B-22	INTERIOR DIAPHRAGM DETAILS PIERS #2,#3 & #5
B-23	INTERIOR DIAPHRAGM DETAILS PIER #4
B-24	LATERAL BRACING DETAILS
B-25	FIELD SPLICE DETAILS
B-26	PINTLE DETAILS
B-27	ACCESS MANHOLE AND MISCELLANEOUS STEEL DETAILS
B-28	DECK REINFORCEMENT DETAILS
B-29	DECK REINFORCEMENT DETAILS
B-30	DECK REINFORCEMENT DETAILS AT EXPANSION DEVICE
B-31	CONCRETE PLACEMENT SEQUENCE
B-32	BRIDGE EXPANSION JOINT REINFORCING (0-6 INCH)
B-33	BRIDGE EXPANSION DEVICE (0-6 INCH)
B-34	BRIDGE RAIL TYPE 4 (470)
B-35	BEARING DEVICE (TYPE III) DETAILS
B-36	BEARING DEVICE (TYPE III) DETAILS
B-37	BRIDGE DRAIN (SPECIAL)
B-38	BRIDGE DRAIN (SPECIAL)
B-39	INTERIOR LIGHTING DETAILS
B-40	APPROACH SLAB DETAILS
B-41	SLOPE PAVING DETAILS
B-42	BRIDGE DECK ELEVATIONS
B-43	BRIDGE DECK ELEVATIONS
B-44	BRIDGE DECK ELEVATIONS
B-45	ROADWAY APPROACHES

Cross Reference Drawing Number

B

Section or Detail Identification

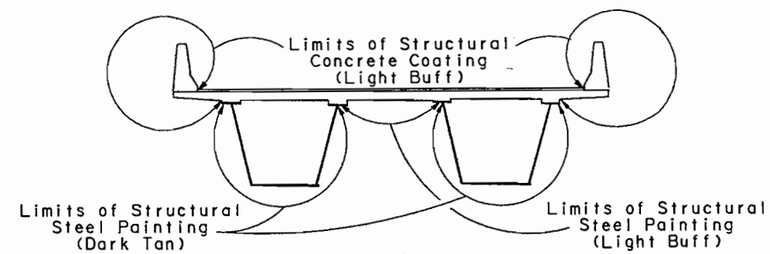

SUPERSTRUCTURE COATING FINISH DIAGRAM

BRIDGE DESCRIPTION

5 SPANS (98'-0", 132'-0", 138'-1 1/16", 147'-10 15/16", 115'-0"), CONTINUOUS AND COMPOSITE WELDED STEEL BOX GIRDERS.
RAMP (WB TO SB) OVER I-25 BRIDGES AND SH 470/E-470 CONNECTOR; AND UNDER EXISTING DIRECTIONAL RAMP C (NB TO WB), AND FUTURE RAMP F (SB TO EB).
27'-0" ROADWAY WIDTH CURB TO CURB, SKEW 90°00'00" (RADIAL)
1'-9" CONCRETE BRIDGE RAIL TYPE 4 (470).

ISSUED FOR CONSTRUCTION
7-9-90

E-470
Engineer 470 Partnership

DIVISION OF HIGHWAYS
I-25/470 INTERCHANGE
RAMP E FLYOVER
GENERAL INFORMATION
STA. 984+22.16 TO STA. 991+53.16
Near: Denver Sec.3 T.6S. R.67W.

Designer A. Griffith		Structure Numbers	F - 17 - JW
Detailer G.Christnacht			
Drawing Number B-1	of 45	Drawings	

	INITIAL	D.
Designed By	AEG	1-90
Checked By	JLS	2-90
Detailed By	GMC	1-90
Checked By	AEG	2-90
Quantities By	JHP	2-90
Checked By	JHP	2-90
Checked By	AEG	2-90

GENERAL NOTES AND DRAWING INDEX

SEGEN0113.90A

AS CONSTRUCTED		
NO REVISIONS	REVISED	VOID

FEDERAL ROAD REGION NO.	DIVISION	PROJECT NUMBER	SHEET NUMBER
VIII	COLORADO	1A06	112

REVISIONS			
A-1	4-02-90	Quantities as Noted	AEG
	- -		
	- -		

SUMMARY OF QUANTITIES

ITEM	DESCRIPTION	UNIT	SUPER-STRUCTURE	ABUT. 1	PIER 2	PIER 3	PIER 4	PIER 5	ABUT. 6	APPROACH SLABS (2)	TOTAL	
206	STRUCTURE EXCAVATION	CU. YD.		220	270	665		515	10		1,680	
206	STRUCTURE BACKFILL (CLASS 1)	CU. YD.		115					115		230	
206	STRUCTURE BACKFILL (CLASS 2)	CU. YD.		20	95	125		75	20		335	
403	HOT BITUMINOUS PAVEMENT(GR.E)(HAUL & ASPHALT) (RUBBERIZED)	TON	198								198	
502	STEEL PILING (12HP53)	LIN.FT.		212					217		429	
503	DRILLED CAISSON (30 INCH)	LIN.FT.		144					200		344	
503	DRILLED CAISSON (36 INCH)	LIN.FT.			90	90		108			288	
507	CONCRETE SLOPE AND DITCH PAVING (REINFORCED)	CU.YD.		19					34		53	
509	STRUCTURAL STEEL (1)	LBS.	872,640								872,640	
512	BEARING DEVICE (TYPE III)	EACH		2	2	2	2	2	2		12	
513	BRIDGE DRAIN (SPECIAL)	EACH	2								2	
515	WATERPROOFING (MEMBRANE)	SQ. YD.	1,881								1,881	
518	BRIDGE COMPRESSION JOINT SEALER	LIN.FT.		20					20	56	96	A-1
518	BRIDGE EXPANSION DEVICE (0-6 INCH)	LIN.FT.	56								56	
601	CONCRETE CLASS B (BRIDGE)	CU. YD.		106.4	123.2	157.6	36.8	148.2	106.8		679	A-1
601	CONCRETE CLASS D (BRIDGE)	CU. YD.	489.0	12.5					12.5	36.0	550	
602	REINFORCING STEEL	LBS.		5,395	7,770	7,770		7,770	5,395		34,100	
602	REINFORCING STEEL (EPOXY COATED)	LBS.	164,355	7,940	13,890	27,590	14,600	25,635	7,940	4,600	266,550	A-1
605	GEOCOMPOSITE DRAIN	SQ. FT.		313					313		626	
606	BRIDGE RAIL TYPE 4 (470)	LIN.FT.	1,258	41					41		1,340	
613	3-INCH ELECTRICAL CONDUIT	LIN.FT.	1,258	45					45		1,348	A-1
613	INTERIOR LIGHTING (STEEL BOX GIRDER)	EACH	4								4	
618	PRESTRESSING WIRE OR STRAND	M K FT					645				645	

NOTES:

(1) Includes 70,950 lbs. of A36 structural steel for interior bracing.
11,230 Lbs. of Steel for temporary bracing is incidental to the project and will not be paid for separately.

(2) Includes Quantities for two approach slabs (at Abut. #1 & Abut. #6).

ISSUED FOR CONSTRUCTION
7-9-90

INITIAL		
Designed By	AEG	3-90
Checked By	JHP	3-90
Detailed By	AEG	3-90

Checked By	AEG	3-90
Quantities By	JHP	3-90
Checked By	AEG	3-90

E-470
Engineer 470 Partnership

DIVISION OF HIGHWAYS
I-25/470 INTERCHANGE
RAMP E FLYOVER
SUMMARY OF QUANTITIES

Designer A. Griffith		Structure Numbers	F - 17 - JW
Detailer A. Griffith			
Drawing Number	B-2	of	45 Drawings

USERNAME
ST241:SQSAMC8174/61)SESUM0113.90A

AS CONSTRUCTED			
NO REVISIONS		REVISED	VOID

FEDERAL ROAD REGION NO.	DIVISION	PROJECT NUMBER	SHEET NUMBER
VIII	COLORADO	1A06/1802	113

REVISIONS		
- -		
- -		
- -		

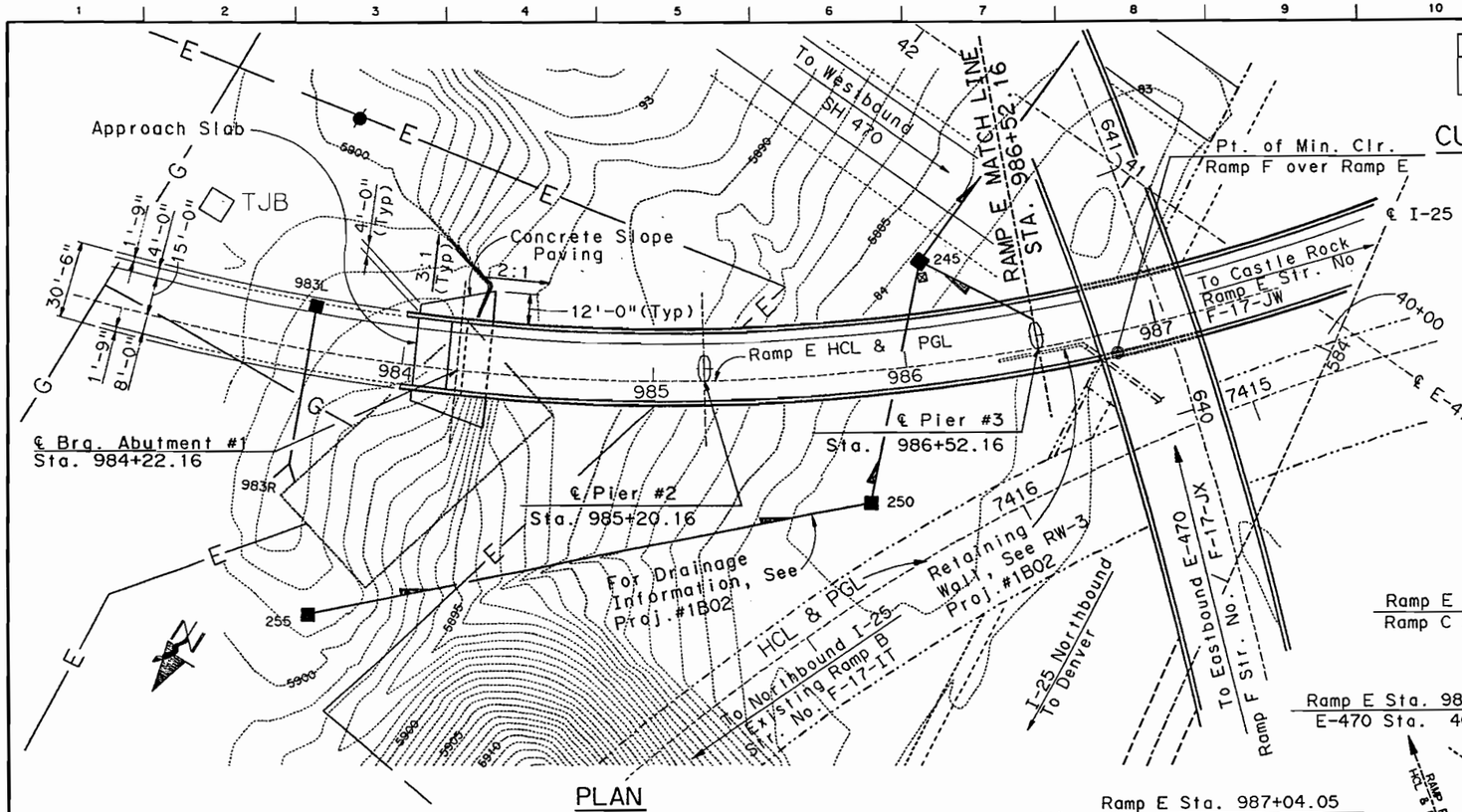

PLAN

* Note: All Centerline of Abutments and Piers are radial, except as noted at ℄ Pier #4.

CURVE DATA - RAMP E

CURVE E-1

Δ = 127°19'49" LT.
D = 7°00'00"
Tc = 1653.60 ft.
R = 818.51 ft.
L = 1819.00 ft.
e = 0.079 '/ft.

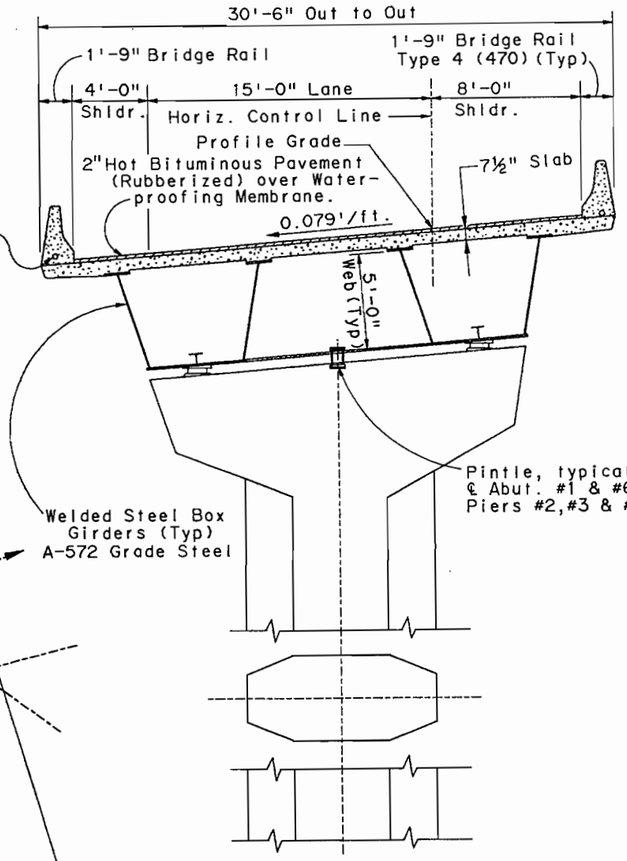

TYPICAL SECTION

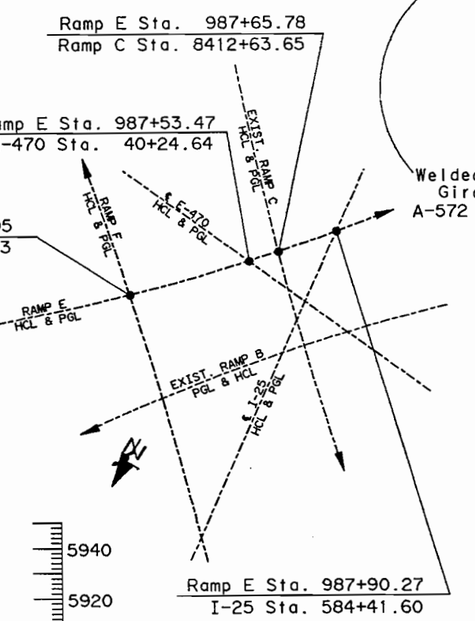

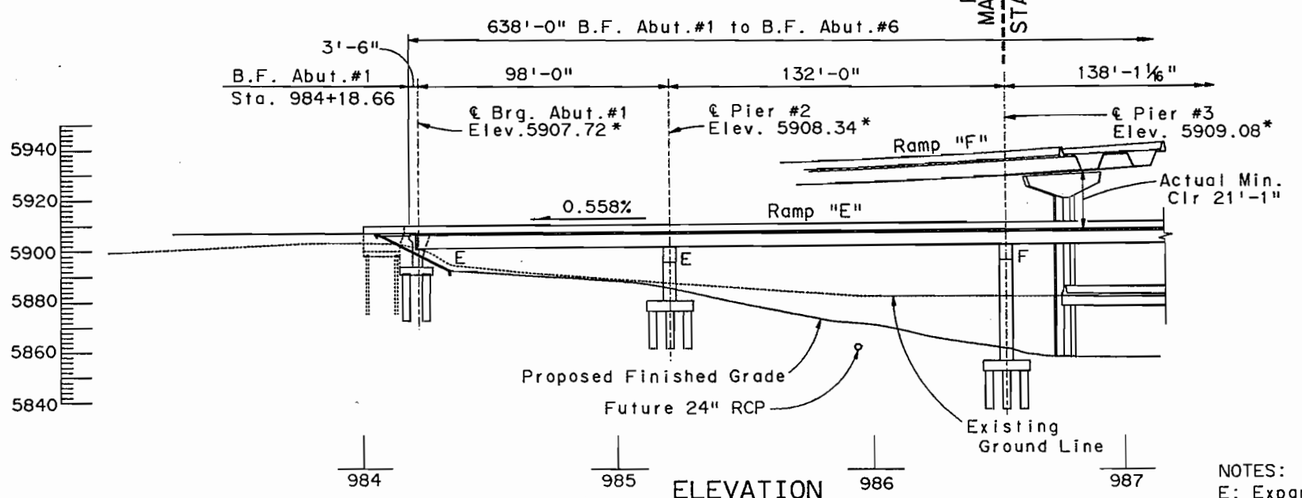

ELEVATION

Taken @ Horizontal Control Line
* : Indicates Finished Grade Elevations.

NOTES:
E: Expansion Bearing
F: Fixed Bearing
For Ramp Profiles, See Dwg. No. B-4

ISSUED FOR CONSTRUCTION
7-9-90

E-470
Engineer 470 Partnership

DIVISION OF HIGHWAYS
I-25/470 INTERCHANGE
RAMP "E"
GENERAL LAYOUT

Designer A. Griffith		Structure Numbers	F - 17 - JW
Detailer A. Griffith			
Drawing Number	B-3	of	45 Drawings

	INITIAL		
Designed By	AEG	1-90	Checked By AEG 2-90
Checked By	JHP	1-90	Quantities By JHP 2-90
Detailed By	GMC	1-90	Checked By ALG 2-90

$$$$$DGNSPLC$$$$$$$$$$$$$$$$
USERNAME
ST241:SQSLMF6$34$$$61 SEGLT0113.90B

RAMP E - GENERAL LAYOUT SHEET 1

SEGLT0113.90B

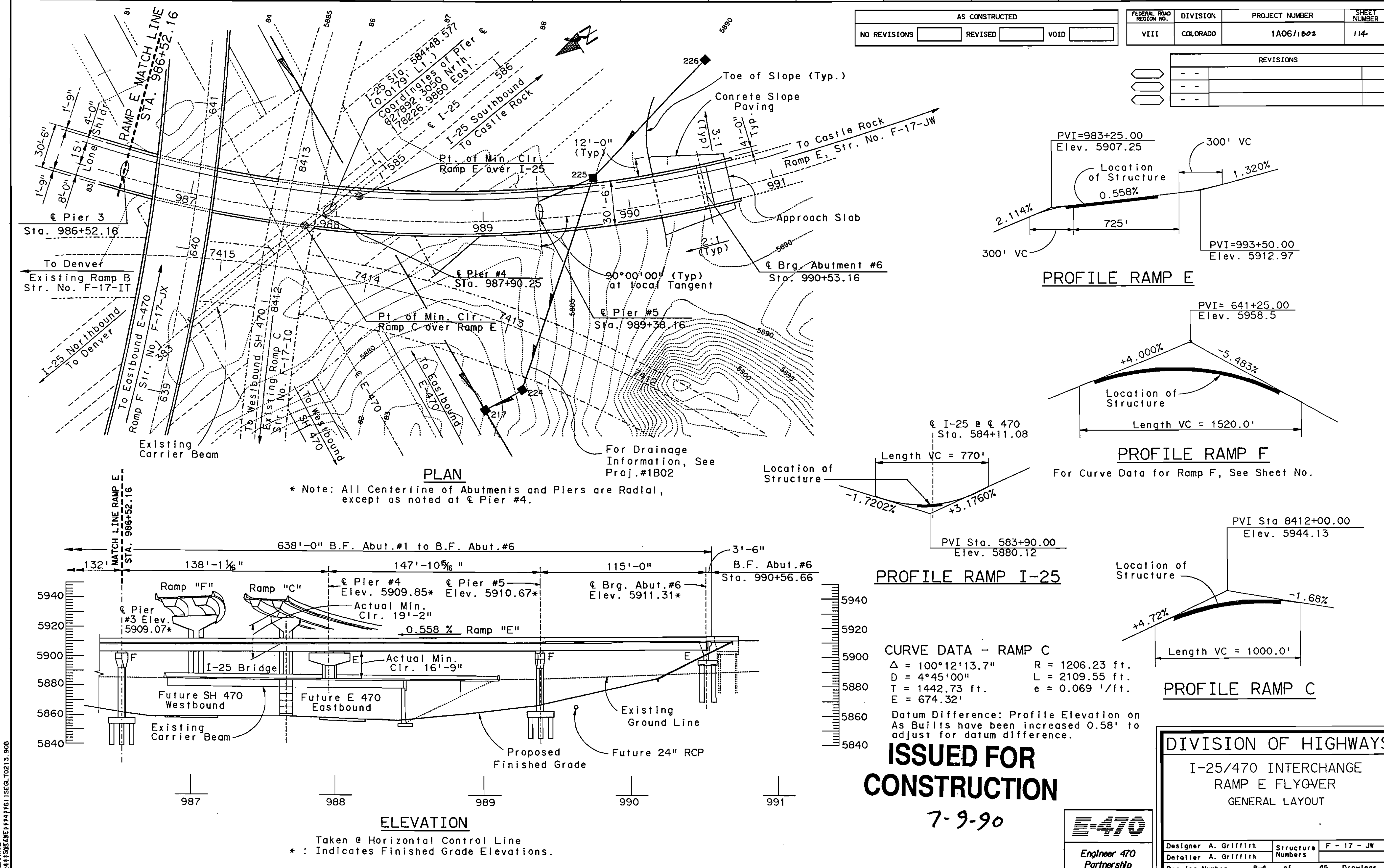

CURVE DATA - RAMP C

Δ = 100°12'13.7" R = 1206.23 ft.
D = 4°45'00" L = 2109.55 ft.
T = 1442.73 ft. e = 0.069 '/ft.
E = 674.32'

Datum Difference: Profile Elevation on As Builts have been increased 0.58' to adjust for datum difference.

ISSUED FOR CONSTRUCTION

7-9-90

E-470
Engineer 470 Partnership

DIVISION OF HIGHWAYS
I-25/470 INTERCHANGE
RAMP E FLYOVER
GENERAL LAYOUT

Designer A. Griffith		Structure Numbers	F - 17 - JW
Detailer A. Griffith			
Drawing Number B-4	of	45	Drawings

	INITIAL			
Designed By	AEG	Checked By	AEG	2-90
Checked By	JHP	Quantities By	JHP	2-90
Detailed By	AEG	Checked By	AEG	2-90

RAMP E - GENERAL LAYOUT SHEET 2
SEGLT0213.90B

FED ROAD REG NO.	DIVISION	PROJECT NO.	SHEET NO.	TOTAL SHEETS
VIII	COLORADO	IAO6/180Z	115	

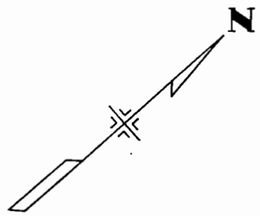

APPROXIMATE SCALE : 1" = 40'

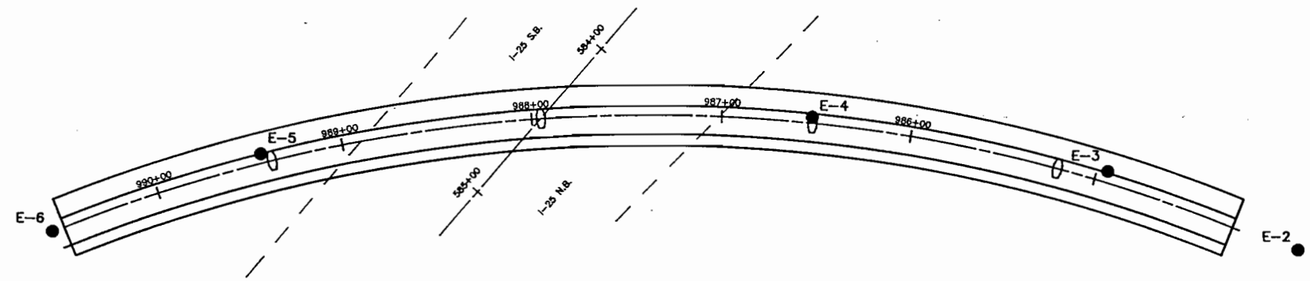

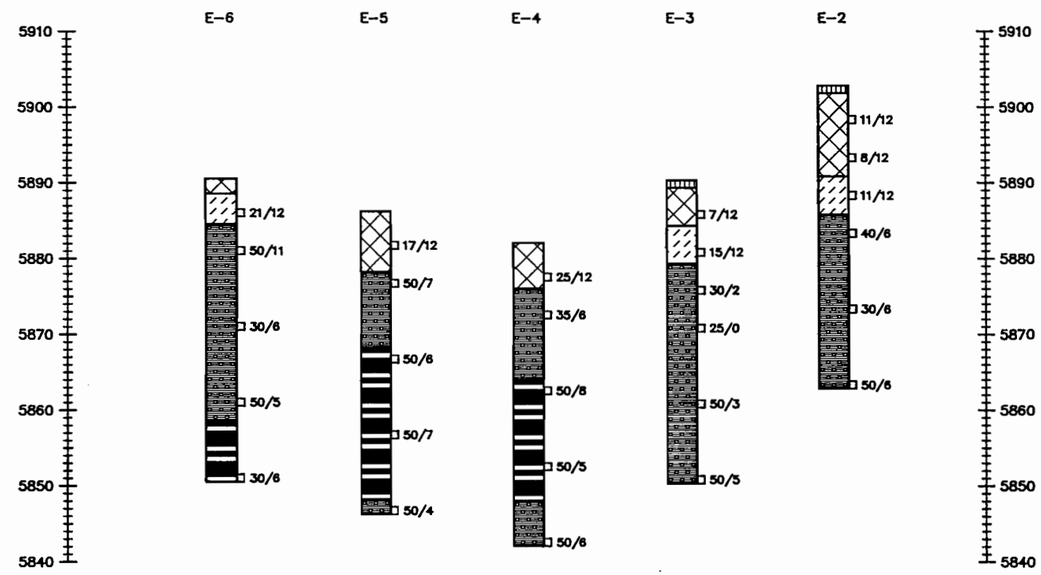

ISSUED FOR CONSTRUCTION

7-9-90

SUMMARY OF TEST RESULTS

Sample No.	Depth	Classification: Corp of Engrs. of Vicksb	Classification: AASHTO	Grading Analysis Percent: Gravel	Coarse Sand	Fine Sand	Silt and Clay	Atterberg Limits: Liquid Limit Lw	Plastic Limit Pw	Plastic Index Iw	Water Cont. W %	Wet Unit Weight γ P.C.F.	Unconfined Strength Qu T.S.F.	Triaxial Shear Strength: φ°	C P.S.I.	Dia. of Sample (Inches)
E-2	4	Fill, clay									19.1	124				1.935
E-2	14	Clay, sandy CL									14.5	127				1.935
E-3	29	Sandstone					6				5.0					1.935
E-4	4	Fill, clay									14.6	130				1.935
E-4	9	Sandstone					5				3.3					1.935
E-4	19	Claystone									22.2	126	5.1			1.935
E-5	9	Sandstone					7				4.8					1.935
E-5	19	Claystone									16.2	135				1.935
E-5	29	Claystone									20.2	129	6.6			1.935
E-6	4	Clay, sandy CL									13.9	120				1.935
E-6	19	Sandstone									18.5	129	5.7			1.935

TYPE OF MATERIAL

- Asphalt pavement and base course.
- Fill, clay, sandy, claystone, some asphalt, medium stiff to very stiff, moist to very moist, brown, olive, gray.
- Clay, sandy, stiff to very stiff, slightly moist to moist, brown, tan, porous in places (CL).
- Sandstone bedrock, silty to clayey, hard to very hard, slightly moist to moist, lt. gray, tan, rust, olive.
- Claystone bedrock, silty to sandy, hard to very hard, moist, olive, gray, brown, rust.

LEGEND

TEST BORING

Number of Days Elapsed Between Drilling and Water Elevation Measurement

Water Table

26/12*

50 / 25 Core Recovery / RQD

* DRIVE SAMPLE

The symbol 26/12 indicates 26 blows of a 140 pound hammer falling 30 inches were required to drive a 2.5 inch o.d. sampler 12 inches.

● Location of Test Boring

NOTES

1. No free water was measured in the borings at the time of drilling.

E-470

RAMP E
E-470 AT I-25

ENGINEERING GEOLOGY

CTL/Thompson, Inc.

Drawn by WJW
Checked by CSM
Date September 1989

STRUCTURE
DWG NO. B -5 OF 45

AS CONSTRUCTED					
NO REVISIONS		REVISED		VOID	

FEDERAL ROAD REGION NO.	DIVISION	PROJECT NUMBER	SHEET NUMBER
VIII	COLORADO	1A06	116

	REVISIONS		
A-1	4-02-90	Dimension @ Fascia & Notes	JHP
	- -		
	- -		

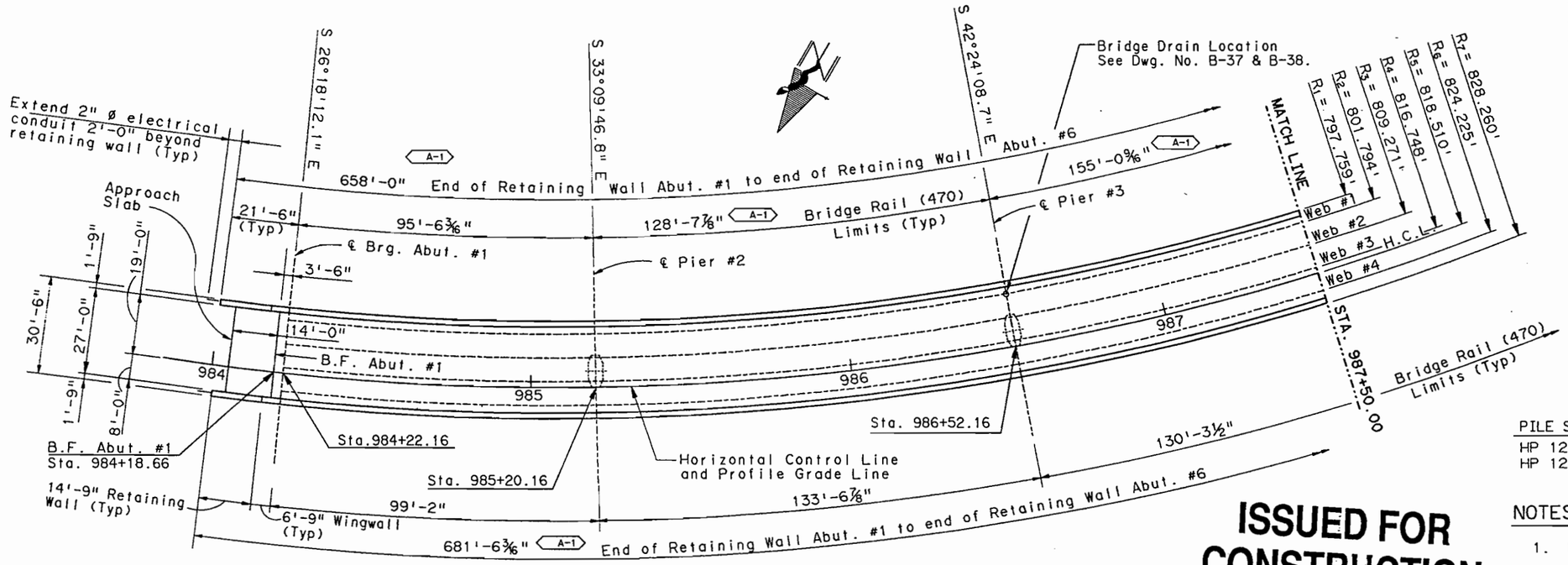

CONSTRUCTION LAYOUT

Note: All Abutments and Piers are radial, except Pier #4 as noted.
Radius R1 thru R7 are constant for Ramp E Structure.
2 ø Conduits in both bridge rails not shown for clarity.
See Dwg. No. B-28 for location.

ISSUED FOR CONSTRUCTION
7-9-90

PILE SIZE	LOCATION	EST. TIP ELEV.	QUANTITY
HP 12x53	Abut. 1	5873.00	8 Total
HP 12x53	Abut. 6	5876.00	8 Total

NOTES:

1. Piling & Caisson location dimensions are shown at bottom of concrete cap.
2. Indicates piling to be battered, 3:12 in the direction shown.
3. Piling shall be End Bearing HP12x53 with the Design Pile Load of 48 Tons.
4. For Caisson design data and Details, See Dwg. No. B-8.
5. For Bridge Rail (470) Pay limit lengths, work this drawing with Dwg. No. B-34.

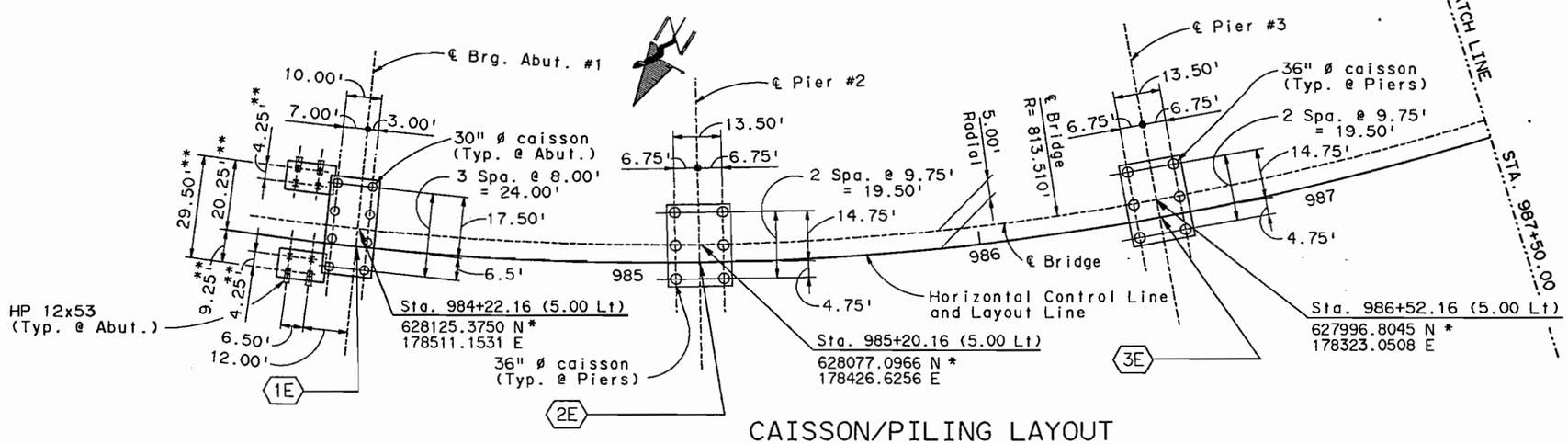

CAISSON/PILING LAYOUT

Note: All Abutments and Piers are radial, except Pier #4 as noted.
* :Modified State Plane Coordinates for Centeral Region given at Center of Columns, Abutments and footings hove been adjusted for superelevations.
** : Dimension given is radial to Horizontal Control Line.

TABLE OF WORK POINTS		
1E	Sta. 984+22.16	628129.8564 N 178508.9379 E
2E	Sta. 985+20.16	628081.2816 N 178423.8908 E
3E	Sta. 986+52.16	628000.4964 N 178319.6793 E

E-470
Engineer 470 Partnership

DIVISION OF HIGHWAYS
I-25/470 INTERCHANGE
RAMP E FLYOVER
CONSTRUCTION LAYOUT AND CAISSON / PILING LAYOUT

Designer A. GRIFFITH		Structure Numbers	F - 17 - JW
Detailer A. GRIFFITH			
Drawing Number B-6	of	45	Drawings

	INITIAL	DA.	
Designed By	AEG	1-90	Checked By
Checked By	JHP	1-90	Quantities By
Detailed By	AEG	1-90	Checked By

AEG	JHP	2-90
JHP	JHP	2-90
AEG	AEG	2-90

$$$$$DGNSHEC$$$$$$$$$$$$$$$$$$
USERNAME
S:\24111\SQSAMP\9974\6111SECON0113.90F

AS CONSTRUCTED					
NO REVISIONS		REVISED		VOID	

FEDERAL ROAD REGION NO.	DIVISION	PROJECT NUMBER	SHEET NUMBER
VIII	COLORADO	1A06	117

REVISIONS			
A-1	4-02-90	Dimensions @ Fascia & Note.	JHP
	- -		
	- -		

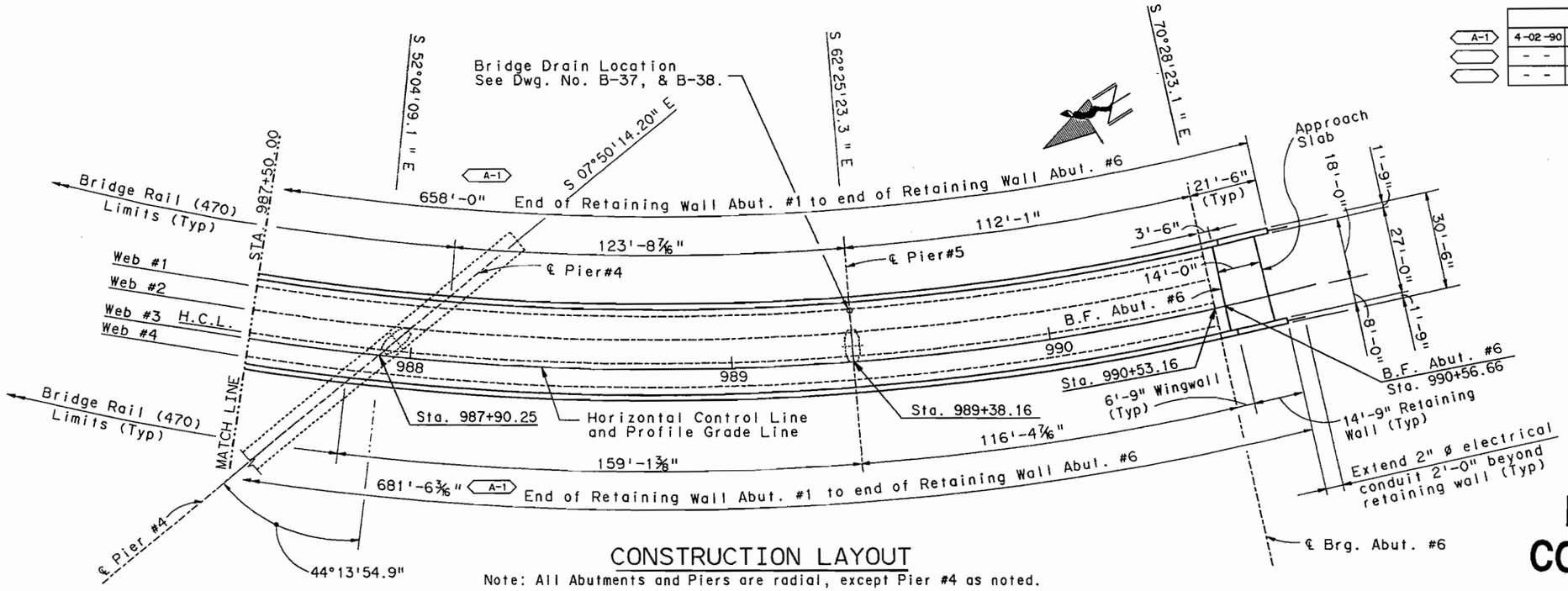

CONSTRUCTION LAYOUT

Note: All Abutments and Piers are radial, except Pier #4 as noted.
2 ø Conduits in both bridge rails not shown for clarity.
See Dwg. No. B-28 for location.

ISSUED FOR CONSTRUCTION
7-9-90

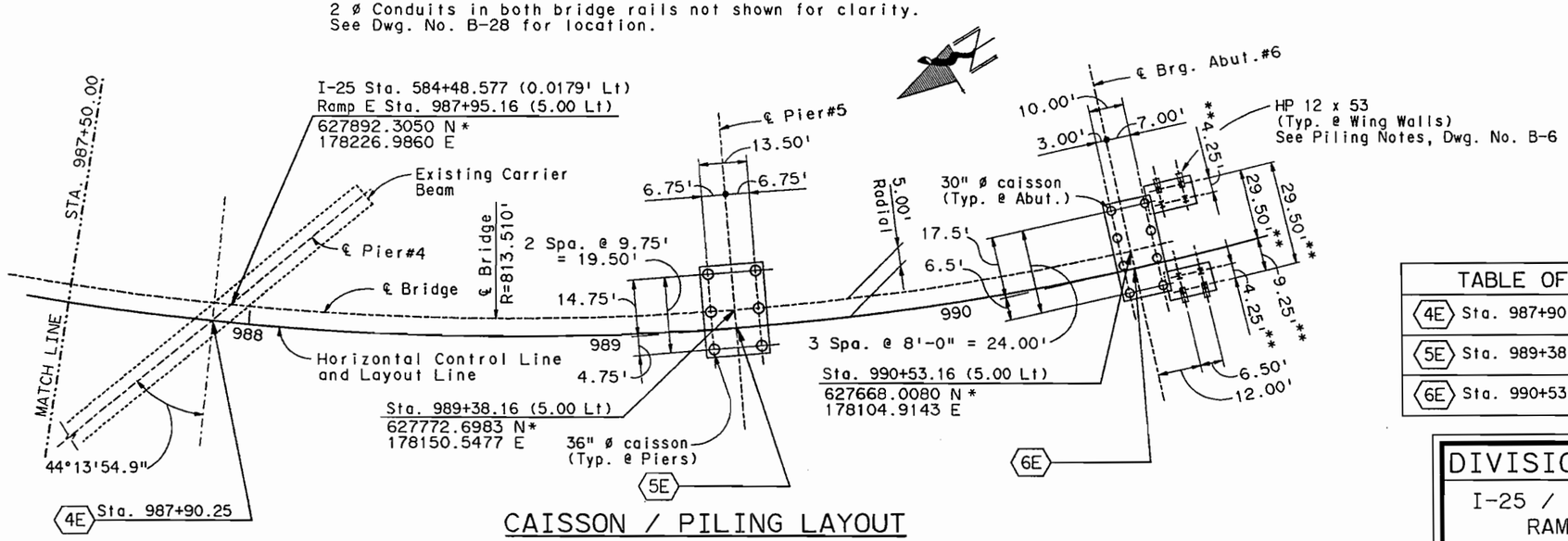

CAISSON / PILING LAYOUT

Note: All Abutments and Piers are radial, except Pier #4 as noted.

* : Modified State Plane Coordinates for Centeral Region given at Center of Column and Abutment

A-1 Columns, Abutments and footings have been adjusted for superelevations.

For Construction sequence, details and notes, See Dwg. No. B-13 & B-31.

** : Dimension given is radial to Horizontal Control Line.

TABLE OF WORK POINTS	
4E Sta. 987+90.25	627899.2385 N 178226.0317 E
5E Sta. 989+38.16	627775.0129 N 178146.1157 E
6E Sta. 990+53.16	627669.6793 N 178100.2018 E

INITIAL	D
Designed By	AEG
Checked By	JHP
Detailed By	AEG
Checked By	JHP
Quantities By	JHP
Checked By	AEG
	2-90
	2-90
	2-90
	2-90
	2-90

DIVISION OF HIGHWAYS

I-25 / 470 INTERCHANGE
RAMP E FLYOVER
CONSTRUCTION LAYOUT AND
CAISSON / PILING LAYOUT

Engineer 470 Partnership

Designer A. GRIFFITH	Structure Numbers	F - 17 -JW	
Detailer A. GRIFFITH			
Drawing Number B-7 of 45 Drawings			

USERNAME
$$$$DGNSPEC$$$$$$$$$$$$$$$$
S:\24$$$$SQSAMPE$$$$$$$$$$$$$$$$61\SECON0213.90F

AS CONSTRUCTED			
NO REVISIONS		REVISED	VOID

FEDERAL ROAD REGION NO.	DIVISION	PROJECT NUMBER	SHEET NUMBER
VIII	COLORADO	1A06/1802	118

REVISIONS		
- -		
- -		
- -		

CAISSON DATA

CAISSON GROUP	LOCATION	DIMENSIONS "A"	"B"	"C"	"D"	"E"	ELEVATIONS "F"	"G"	"H"	REINFORCEMENT # OF BARS	SIZE	STANDARD HOOK REQUIRED	DESIGN AXIAL LOAD PER CAISSON	TOTAL NUMBER OF CAISSONS
I	ABUTMENT #1	30"	18'-0"	2'-0"	2'-8"	12'-0"	5890.75	5884.75	5872.75	10	#10	YES	190 Kips	8
II	PIER #2	36"	15'-0"	4'-6"	4'-6"	15'-0"	5875.50	5875.50	5860.50	12	#9	NO	330 Kips	6
III	PIER #3	36"	15'-0"	4'-6"	4'-6"	15'-0"	5852.50	5852.50	5837.50	12	#9	NO	400 Kips	6
IV	PIER #5	36"	18'-0"	4'-6"	4'-6"	18'-0"	5860.50	5860.50	5842.50	12	#9	NO	410 Kips	6
V	ABUTMENT #6	30"	25'-0"	2'-0"	2'-8"	15'-0"	5894.25	5884.25	5869.25	10	#10	YES	190 Kips	8

(B)

NOTES:

1. For Caisson layout, see Dwg. No. B-6 & B-7.
2. Dimension "A" shown is the outside diameter of the caisson.
3. Dimension "B" shown is based on an estimated top of bedrock elevation "G". If Elevation "G" is higher than elevation "F", then elevation "G" has been recorded as "F".
4. Dimension "C" is the projected length of caisson reinforcing to be extended above top of Caisson, to Battom layer of Hooks.
5. Dimension "D" is the projected length of caisson reinforcing to be extended above top of caisson, to top layer of Hooks. Hooks shall be placed in layers between "C" and "D" to accomodate geometric constraints of hooked reinforcing near circle center.
6. All reinforcing is non epoxy-coated. (B): indicates non Epoxy-Coated Reinforcing. No substitution unless approved by Engineer.
7. Reinforcing extending above the top of Caisson are included and will not be paid for separately.
8. Top of bedrock elevation shall be verified at the time of construction by the Engineer.
9. Dimension "E" shown is the required minimum penetration in bedrock.
10. Provide a clean roughened surface at top of Caisson.

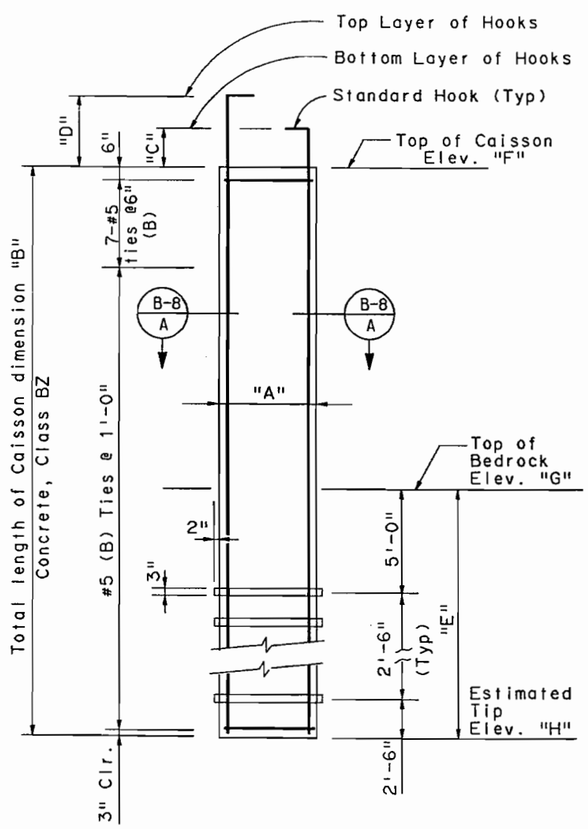

ELEVATION

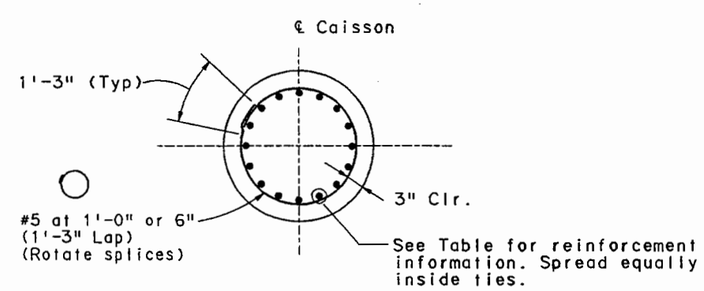

TYPICAL SECTION B-8 A

ISSUED FOR CONSTRUCTION
7-9-90

INITIAL	D	Checked By	AEG	1-90
Designed By	AEG	1-90	Quantities By	JHP	2-90
Checked By	JHP	1-90	Checked By	JHP	2-90
Detailed By	GMC	1-90	Checked By	AEG	2-90

$$$$DGNSPEC$$$$$$$$$$$$$$$$
USERNAME
S$2411SQSAMS$$$$$$$$$$$$$$$$

DIVISION OF HIGHWAYS
I-25 / 470 INTERCHANGE
RAMP E FLYOVER
CAISSON DETAILS

E-470
Engineer 470 Partnership

Designer A. Griffith	Structure Numbers	F - 17 - JW	
Detailer G.Christnacht			
Drawing Number B-8	of 45	Drawings	

CAISSON DETAILS
SECAS0113.90H

AS CONSTRUCTED				
NO REVISIONS		REVISED		VOID

FEDERAL ROAD REGION NO.	DIVISION	PROJECT NUMBER	SHEET NUMBER
VIII	COLORADO	1A06	119

REVISIONS		
4-02-90	Elevations & Details at Overhang	AEG
- -		
- -		

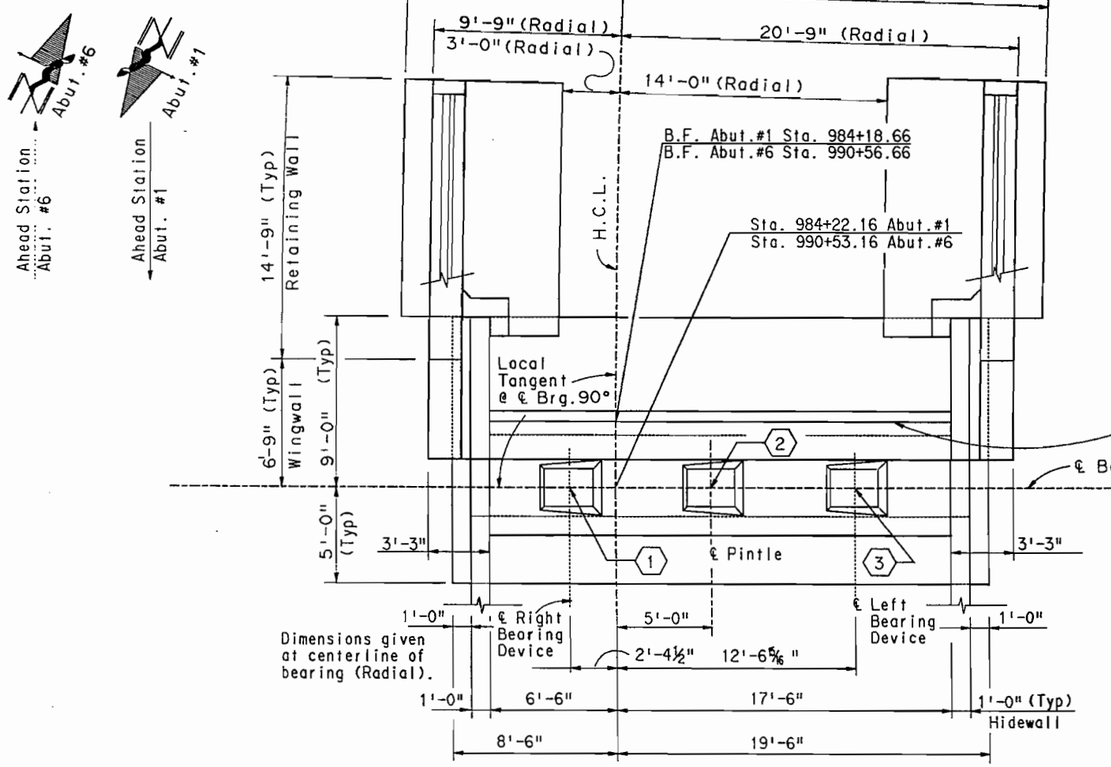

ABUTMENT #1 PLAN

Note: Abutment #1 Shown, Abutment #6 opposite Hand.
For Bearing Seat Details, see Partial Plan & Elev. Dwg. No. B-11.

TABLE OF WORK POINTS

Abutment #1

1	628131.9883 N	178507.8841 E
2	628125.3750 N	178511.1531 E
3	628118.5827 N	178514.5106 E

Abutment #6

1	627670.4738 N	178097.9615 E
2	627668.0080 N	178104.9143 E
3	627665.4754 N	178112.0554 E

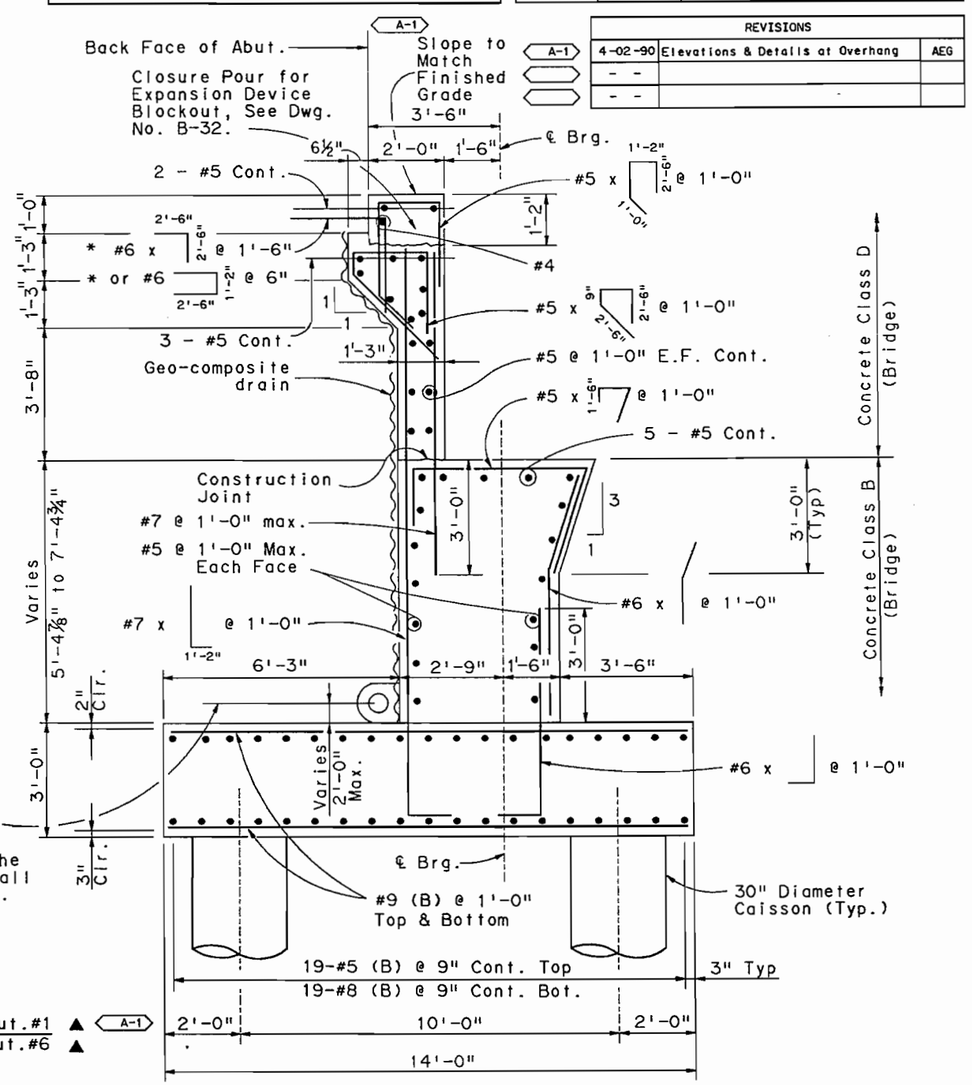

TYPICAL SECTION

* Note: For Reinforcing extending into approach slab see Detail Dwg. No. B-40.

Center of 6" ø perforated pipe continuous, to be included in the cost of the Geocomposite Drain and shall not be paid for seperatly.

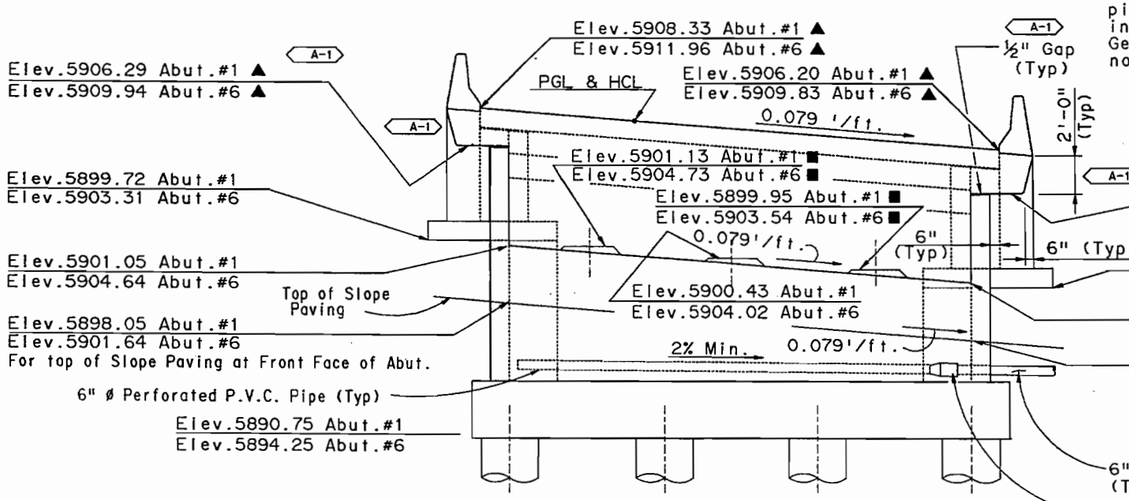

ABUTMENT #1 ELEVATION

Looking Back Station

▲ Elevations are Back Face of Abutment.
Note: Abutment #1 Shown, Abutment #6 opposite Hand.

■ Elevations shall be adjusted to suit the bearings used.

ISSUED FOR CONSTRUCTION

7-9-90

E-470
Engineer 470 Partnership

DIVISION OF HIGHWAYS
I-25 / 470 INTERCHANGE
RAMP E FLYOVER
ABUTMENT #1 AND #6 PLAN, ELEVATION AND SECTION

Designer A. Griffith		Structure Numbers	F - 17 - JW
Detailer G.Christnocht			
Drawing Number B-9	of 45 Drawings		

Designed By	INITIAL ALG	D 1-90	Checked By Alt. Div. 2-90
Checked By	DBW	1-90	Quantities By JHP 2-90
Detailed By	GMC	1-90	Checked By DBW 2-90

USERNAME S:\241\SOSA\BE\F241\613SEABT0113.90J

ABUTMENT #1 PLAN AND ELEVATION

SEABT0113.90J

AS CONSTRUCTED			
NO REVISIONS		REVISED	VOID

FEDERAL ROAD REGION NO.	DIVISION	PROJECT NUMBER	SHEET NUMBER
VIII	COLORADO	1A06	120

REVISIONS		
4-02-90	Details for Section "A"	AEG
- -		
- -		

TABLE OF ELEVATIONS		
LOCATION	ABUT. #1	ABUT. #1
ELEV. A (LEFT)	5905.88	5909.53
ELEV. A (RIGHT)	5908.29	5911.94
ELEV. B (LEFT)	5905.78	5909.63
ELEV. B (RIGHT)	5908.19	5912.04

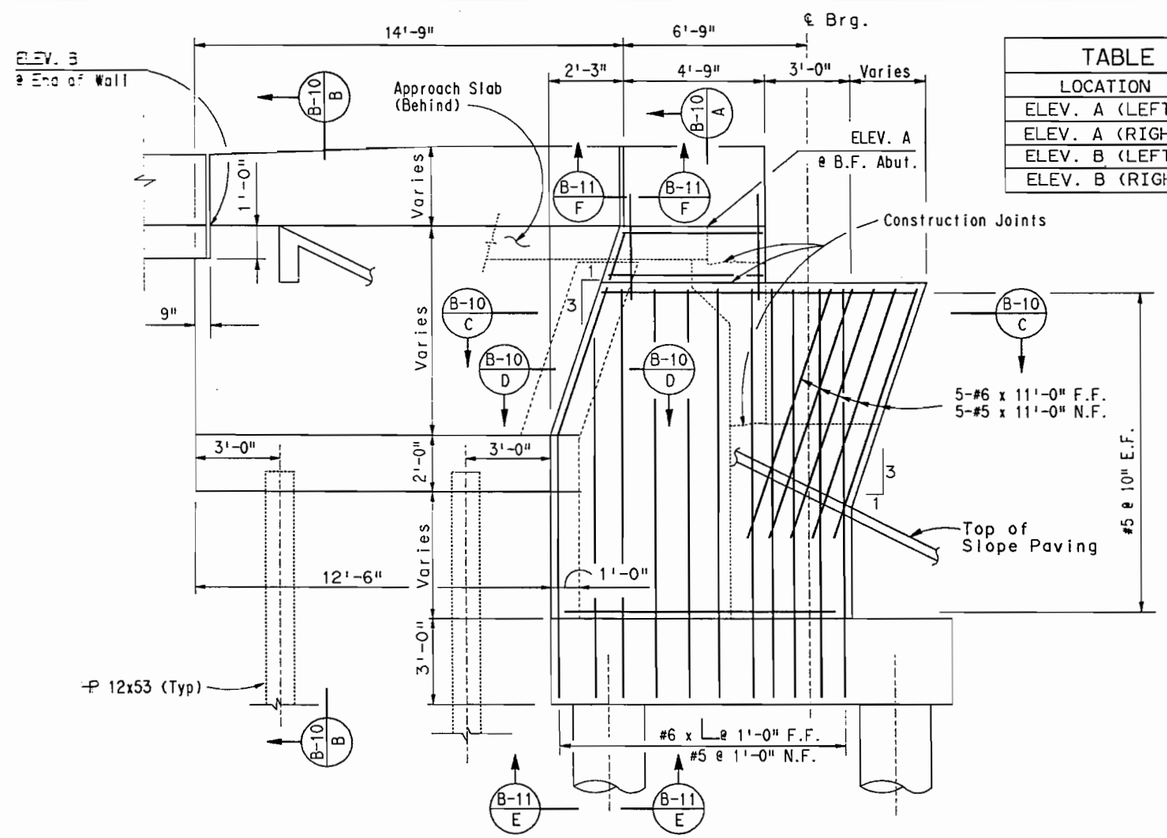

ELEVATION

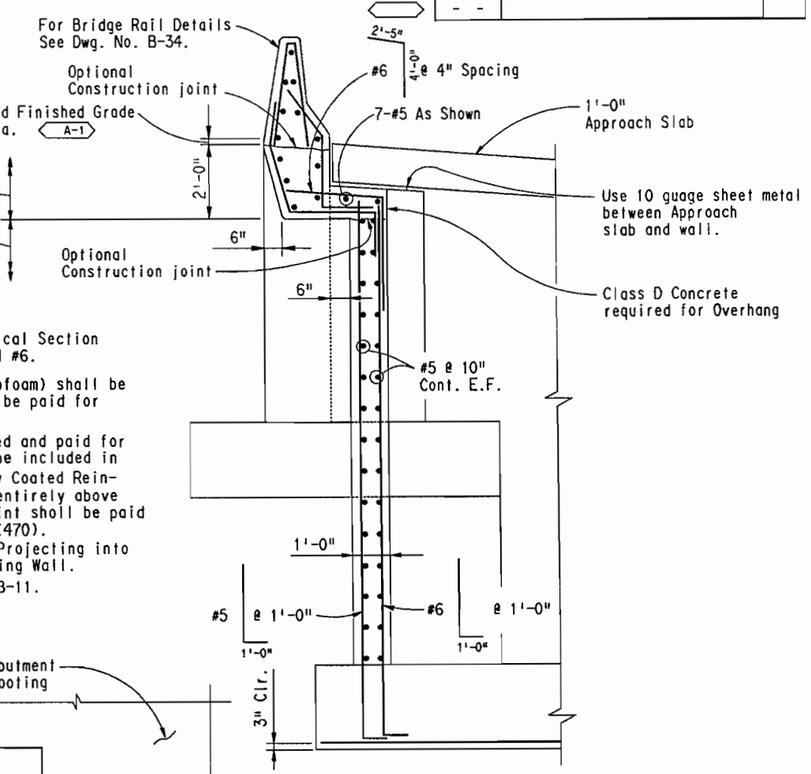

SECTION B-10 A

NOTES:

1. 6" Perforated Pipe pertains to Typical Section and is required at Abutment #1, and #6.
2. 4 Inch Void forming material (Styrofoam) shall be included in the work and shall not be paid for separately.
3. Bridge Rail Type 4 (470) is measured and paid for by the Linear Foot, and shall not be included in Concrete Class D (Bridge) and Epoxy Coated Reinforcing. The Reinforcing located entirely above the Upper Optional Construction Joint shall be paid for in Cost of Bridge Rail Type 4 (470). See Dwg. No. B-34 for Reinforcing Projecting into Bridge Rail on Wingwall and Retaining Wall.
4. See Footing Step Detail, Dwg. No. B-11.

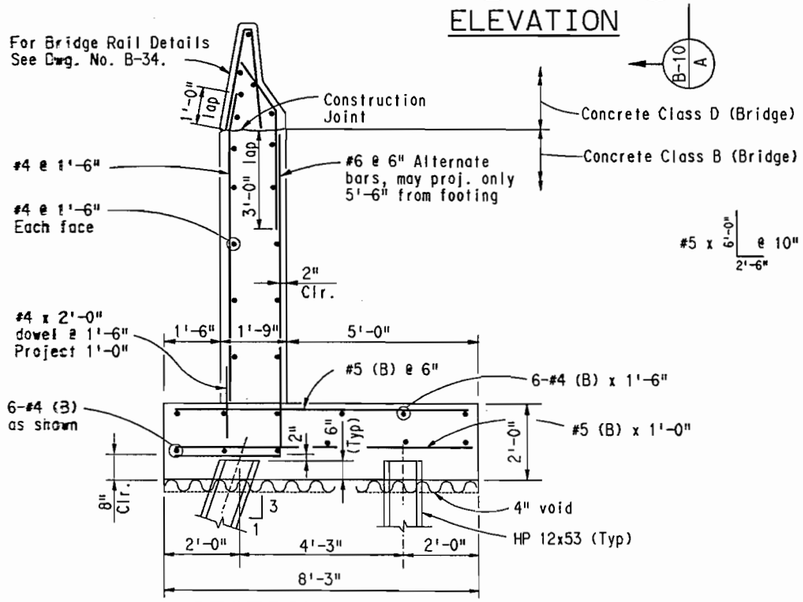

SECTION B-10 B

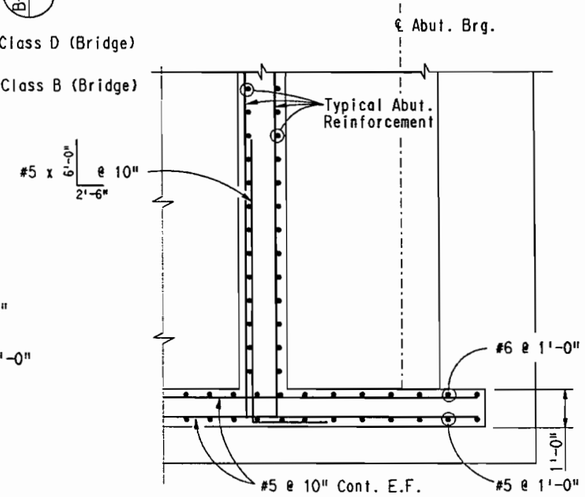

SECTION B-10 C

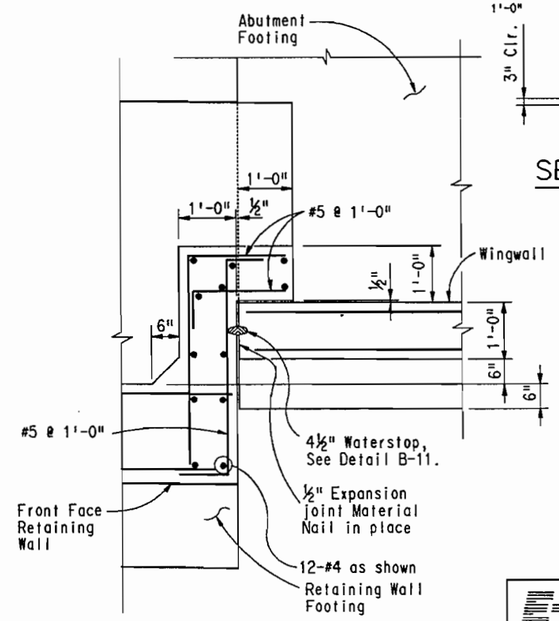

SECTION B-10 D

ISSUED FOR CONSTRUCTION

7-9-90

INITIAL	DATE			
Designed By AEG	12-89	Checked By	ALG	2-90
Checked By DBW	1-90	Quantities By	DBW	2-90
Detailed By GMC	12-89	Checked By	JHP	2-90
			DJW	2-90

E-470

Engineer 470 Partnership

DIVISION OF HIGHWAYS

I-25 / 470 INTERCHANGE
RAMP E FLYOVER
WINGWALL DETAILS

Designer A. Griffith		Structure Numbers	F - 17 - JW
Detailer G.Christnacht			
Drawing Number B-10	of	45	Drawings

WINGWALL DETAILS

SEWWL0113.90J

AS CONSTRUCTED					
NO REVISIONS		REVISED		VOID	

FEDERAL ROAD REGION NO.	DIVISION	PROJECT NUMBER	SHEET NUMBER
VIII	COLORADO	1A06	121

REVISIONS			
A-1	4-02-90	Detail for Section "F"	AEG
	- -		
	- -		

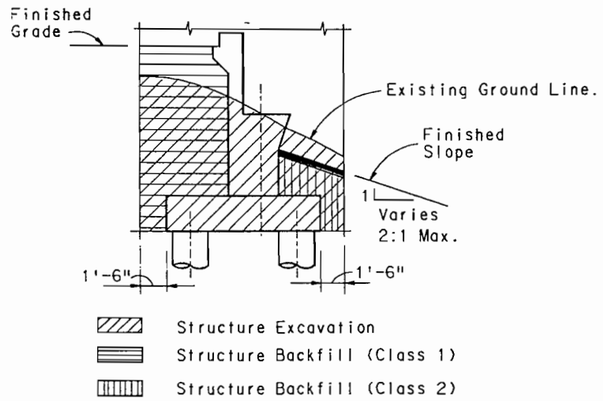

LIMIT OF QUANTITIES FOR ABUTMENTS

Note: 1'-6" Dimension for Excavation is Similar for Wingwall, Retaining Walls and Piers.
Class 2 Backfill required in front of Abutments and beneath Slope Paving.
Class 2 Backfill required at Piers #2, #3 & #5.

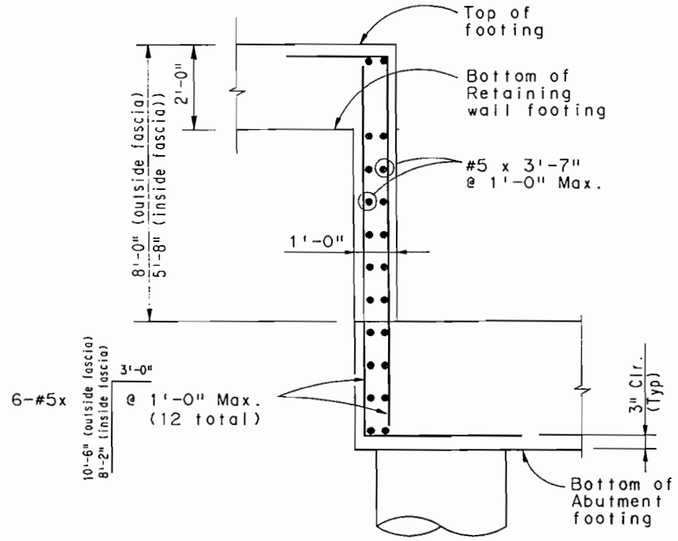

SECTION
Typical footing Step (B-10 / E)

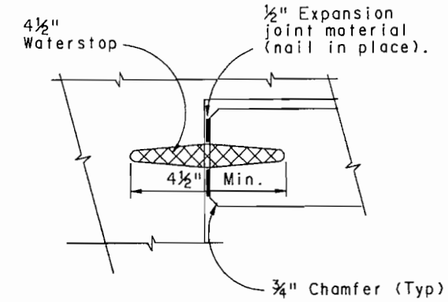

WATERSTOP DETAIL

The 4½" Waterstop shall not be paid for Seperately, but to be included in the work. (Approximately 35 Linear feet total)

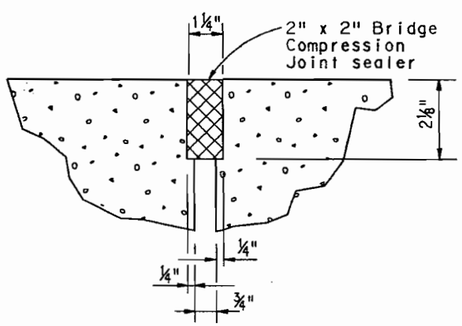

SECTION
Typical footing Step (B-11 / G)

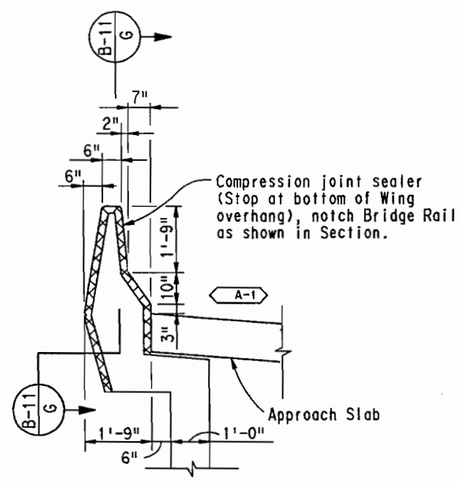

VIEW AT END OF WING
(B-10 / F)

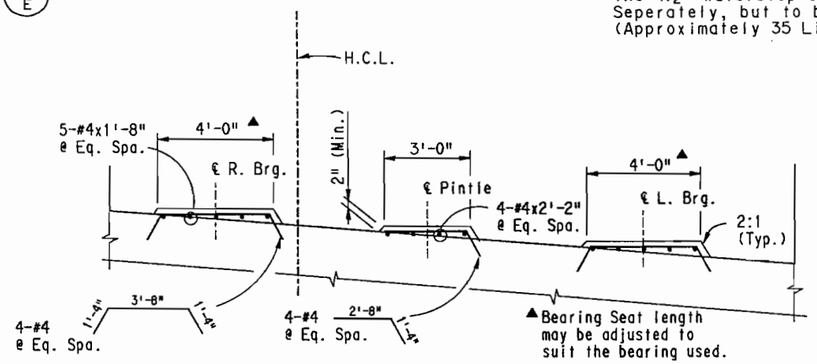

PARTIAL ELEVATION BEARING SEATS

Abutment #1 shown, Abutment #6 similiar, opposite hand.

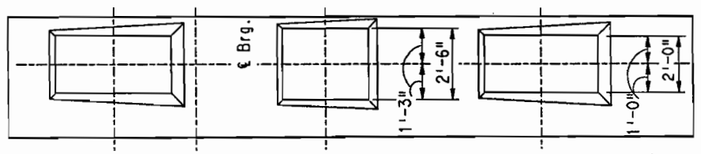

PARTIAL PLAN BEARING SEATS

ISSUED FOR CONSTRUCTION
7-9-90

	INITIAL	DATE	Checked By
Designed By	AEG	12-89	AEG 2-90
Checked By	DBW	1-90	JHP 2-90
Detailed By	GMC	12-89	Quantities By JHP 2-90
			Checked By AEG 2-90

E-470
Engineer 470 Partnership

DIVISION OF HIGHWAYS
I-25 / 470 INTERCHANGE
RAMP E FLYOVER
MISCELLANEOUS ABUTMENT & WINGWALL DETAILS

Designer A. Griffith		Structure Numbers	F - 17 - JW
Detailer G.Christnacht			
Drawing Number	B-11	of	45 Drawings

MISC. ABUT. & WINGWALL DETAILS
SFWWI 0213.90J

USERNAME:
S:\241\95\ABK\1974\161\SEWWI0113.90J

AS CONSTRUCTED			
NO REVISIONS		REVISED		VOID	

FEDERAL ROAD REGION NO.	DIVISION	PROJECT NUMBER	SHEET NUMBER
VIII	COLORADO	1A06	122

REVISIONS		
4-02-90	Cap Dimensions, Elev. & Reinforcing	JHP
- -		
- -		

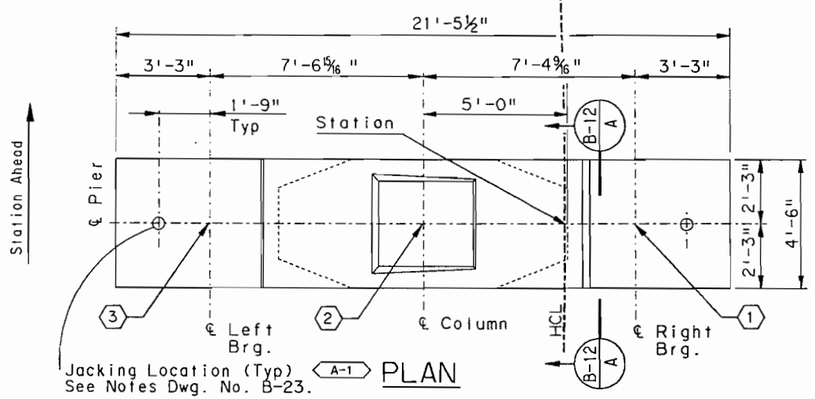

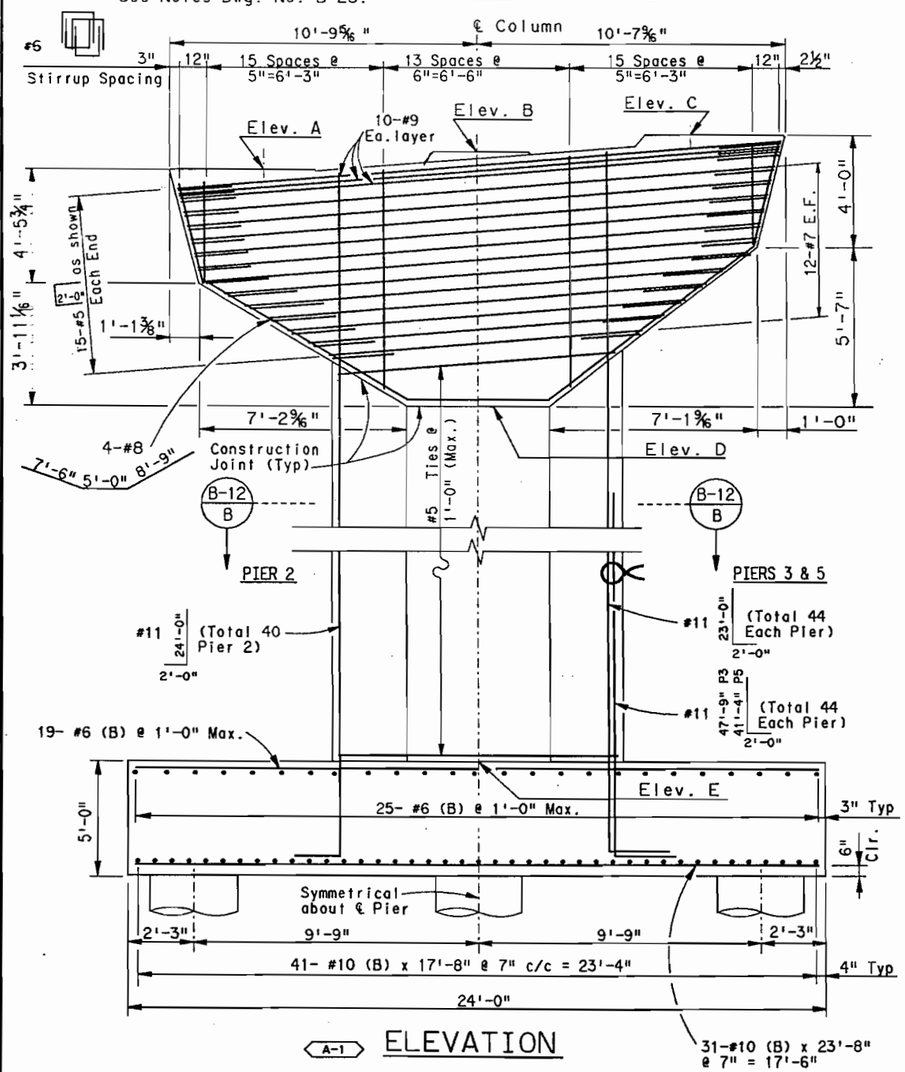

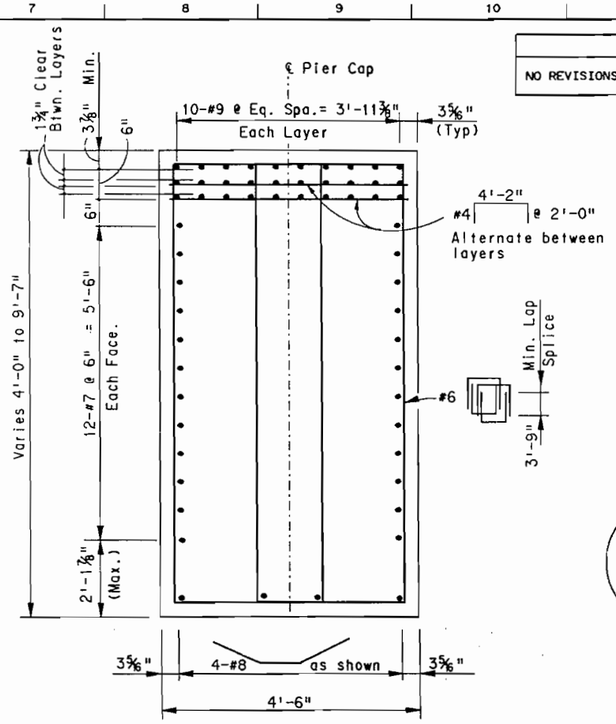

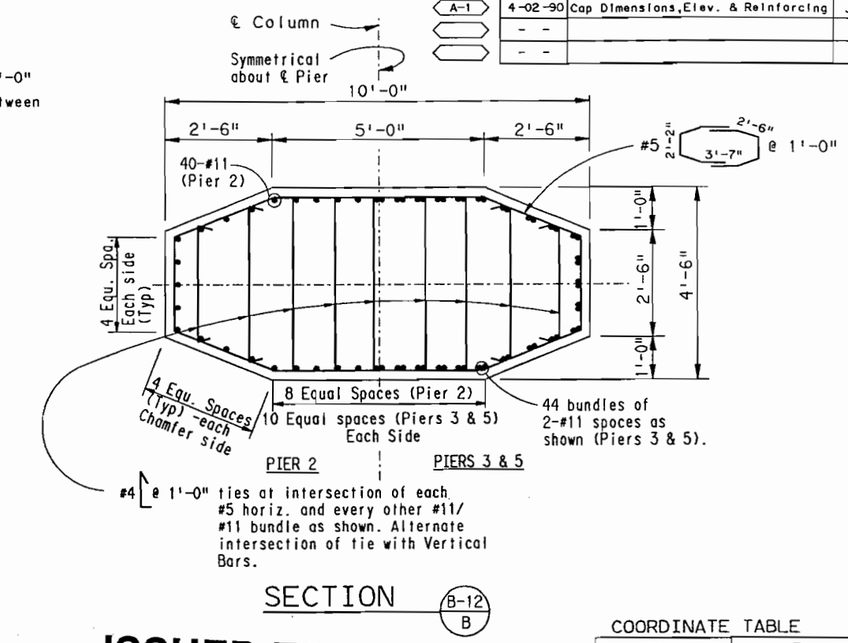

NOTES:

1. See Dwg. No. B-14 for Built-up Concrete Bearing Seat Details.
2. See Dwg. Nos. B-35 and B-36 for Bearing Device Details.
3. Bearing seat and Pier Cap reinforcing shall be adjusted to avoid interference with Bearing anchor bolts.
4. Place end stirrups parallel with the Pier Cap ends.

∝ :Indicates bundled bars.

ISSUED FOR CONSTRUCTION

7-9-90

COORDINATE TABLE

		N	E
Pier 2	1	628083.2721	178422.5902
	2	628077.0966	178426.6256
	3	628070.7538	178430.7703
Pier 3	1	628002.2520	178318.0762
	2	627996.8045	178323.0508
	3	627991.2096	178328.1602
Pier 5	1	627776.1134	178144.0086
	2	627772.6983	178150.5477
	3	627769.1907	178157.2637

A-1	Pier 2	Pier 3	Pier 5
Station	985+20.16	986+52.16	989+38.16
▲ Elev. A	5900.264	5901.136	5902.728
Elev. B	5900.983	5901.691	5903.263
▲ Elev. C	5901.446	5902.318	5903.911
Elev. D	5891.863	5892.735	5894.328
Elev. E	5880.50	5857.50	5865.50

▲ Bearing Seat Elevations shall be Adjusted to fit actual Bearing used.

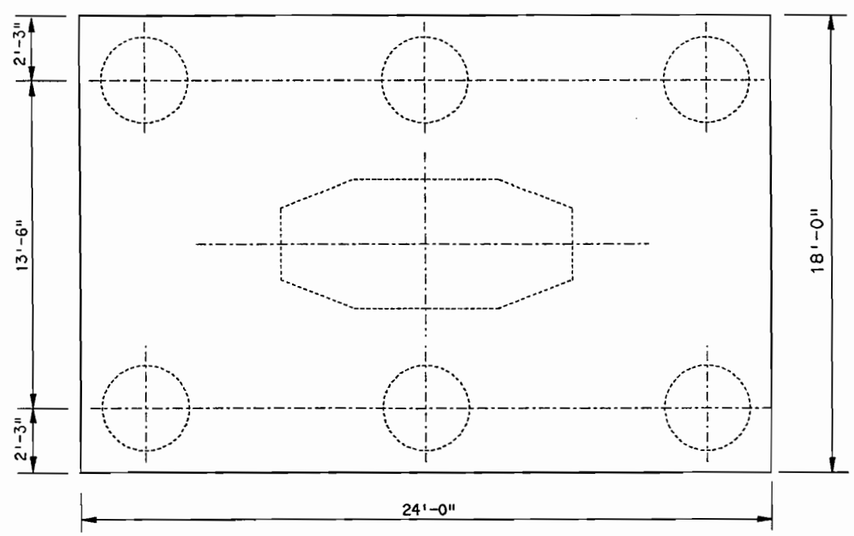

PLAN OF FOOTING

E-470

Engineer 470 Partnership

DIVISION OF HIGHWAYS

E-470/I-25 INTERCHANGE
RAMP "E" FLYOVER
PIERS #2, #3 AND #5
DETAIL SHEET

Designer J. Peck		Structure Numbers	F - 17 - JW
Detailer G.Christnacht			
Drawing Number	B-12 of 45 Drawings		

	INITIAL	DATE		AEG	3-90
Designed By	JHP	1-90	Checked By	JHP	3-90
Checked By	DBW	1-90	Quantities By	JHP	3-90
Detailed By	GMC	1-90	Checked By	AEG	3-90

USERNAME
ST241F:\DSLAN\$$$4/61\SEPRD0113.90M

RAMP E - PIER DETAIL SHEET 1

SEPRD0113.90M

AS CONSTRUCTED				
NO REVISIONS		REVISED		VOID

FEDERAL ROAD REGION NO.	DIVISION	PROJECT NUMBER	SHEET NUMBER
VIII	COLORADO	1A06/1802	123

REVISIONS		
- -		
- -		
- -		

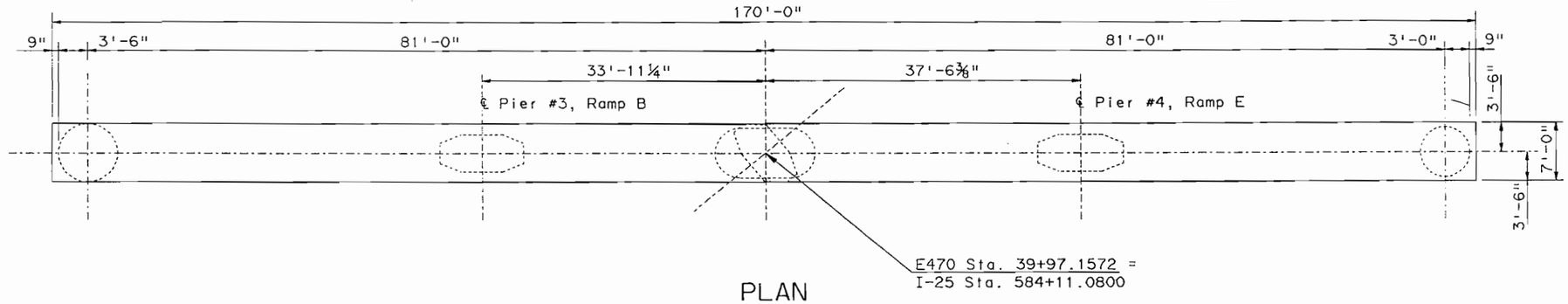

PLAN

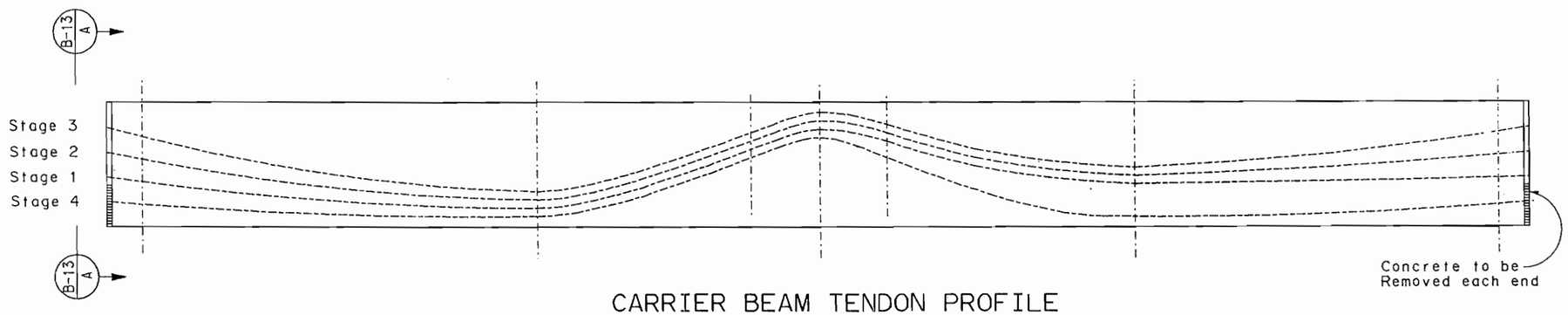

CARRIER BEAM TENDON PROFILE

TENDON TABLE

	34.5' North of ℄ Middle Caisson		℄ Middle Caisson		38.57' South of ℄ Middle Caisson	
	F_f	A	F_f	A	F_f	A
STAGE 4	511.0 k	5.5"	632.5 k	77.75"	735.5 k	5.5"

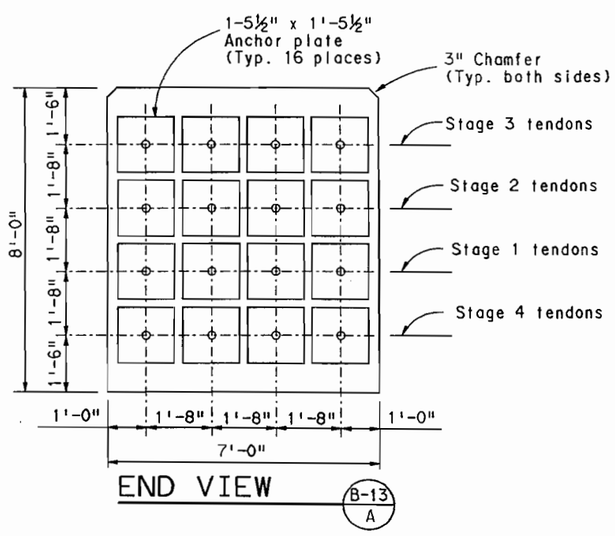

END VIEW

$\frac{948^k}{17 \times 12} = 3.1^{ksi} =$

ISSUED FOR CONSTRUCTION

7-9-90

CONSTRUCTION SEQUENCE:

1. Remove concrete cover cap from top of the Carrier Beam. Clean exposed #11 Reinforcing steel. Use approved mechanical coupler or fusion process to splice new #11 column bars to the existing bars.
2. Apply new epoxy coating to areas where the epoxy coating was damaged during the splicing process.
3. Construct Pier 4 column and cap. Concrete to be poured at night.
4. Install and stress two interior 31-½" ø strand tendons adjacent to Carrier Beam centerline.
5. Erect steel box girders, form and pour concrete deck.
6. Install and stress two exterior 31-½" ø strand tendons.
7. Complete Ramp E construction.

PRESTRESSING NOTES:

1. The jacking force, F_j shall be 948 kips per tendon. $F_j = 0.74 \times f'_s \times A^*_s$ includes friction losses based on $\mu = 0.25$ and k= 0.0002 plus long term-losses of 36,000 psi.
2. No more than one tendon shall be tensioned eccentrically about the Carrier Beam vertical centerline.
3. All grout vents and drain tubes for Stage 4 post-tensioning ducts shall be open and clear of obstructions. Tendons shall not be grouted until all 4 tendons are installed and stressed. Ramps B and C shall be closed to traffic for 24 hours during and following grouting.
4. Dimension A is measured from the Carrier Beam soffit to the post-tensioning steel center of gravity.

	INITIAL	DATE	Checked By	JHP	3-90
Designed By	JHP	1-90		DBW	2-90
Checked By	DKB	3-90	Quantities By	JHP	3-90
Detailed By	GMC	1-90	Checked By	DBW	2-90

E-470
Engineer 470 Partnership

DIVISION OF HIGHWAYS
I-25 / 470 INTERCHANGE
RAMP E FLYOVER
CARRIER BEAM DETAILS
AT PIER #4

Designer J. PECK		Structure Numbers	F - 17 - JW
Detailer G.CHRISTNACHT			
Drawing Number B-13	of 45 Drawings		

CARRIER BEAM DETAILS AT PIER #4

SEPRD0313.90M

$$$$DGNSPEC$$$$$$$$$$$$$$$$
USERNAME
SEPRD0313.90M

Angle	Value
θ_L	44°53'21.9"
θ_{HCL}	45°46'05.1"
θ_R	45°55'40.1"

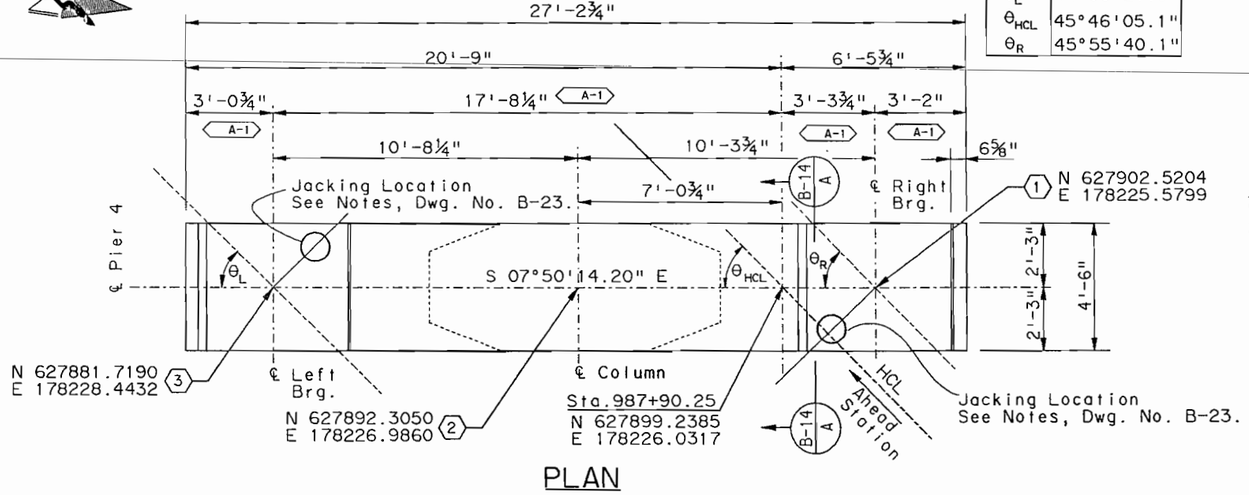

PLAN

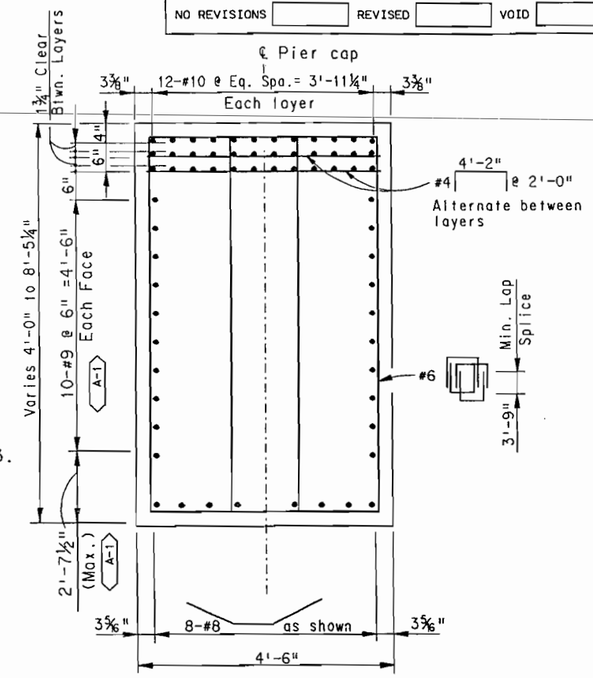

SECTION B-14 A

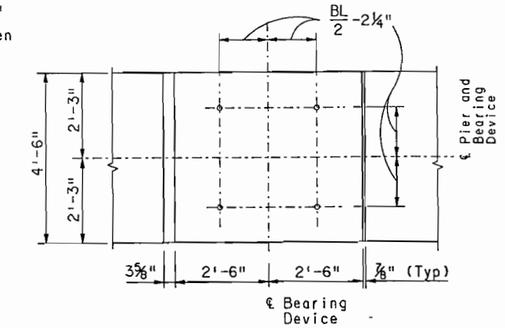

PLAN

Note: For dimension "BL", see Dwg. Nos. B-35 & B-36.

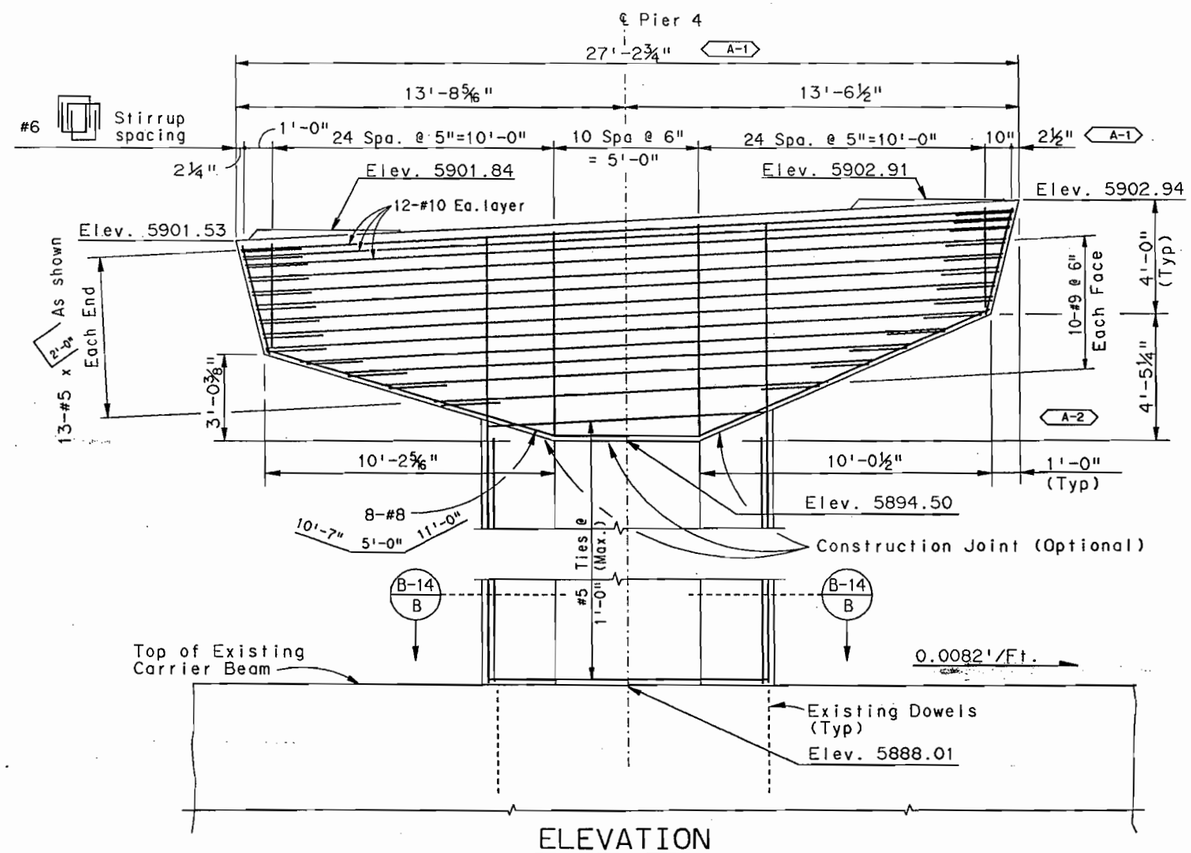

ELEVATION

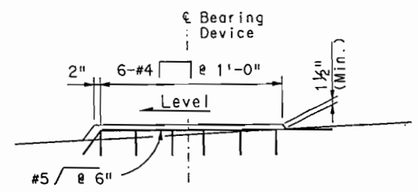

ELEVATION

BUILT-UP CONCRETE BEARING SEAT

For additional details of Bearing Device See Details, Dwg. No. B-35 & B-36.

Notes:

1. Remove concrete cover cap from top of carrier beam. Clean exposed #11 reinforcing steel. Use approved mechanical coupler or fusion process to splice new column bars to the existing bars.
2. Apply new epoxy coating to areas where epoxy coating was damaged in the splicing process.

ISSUED FOR CONSTRUCTION
7-9-90

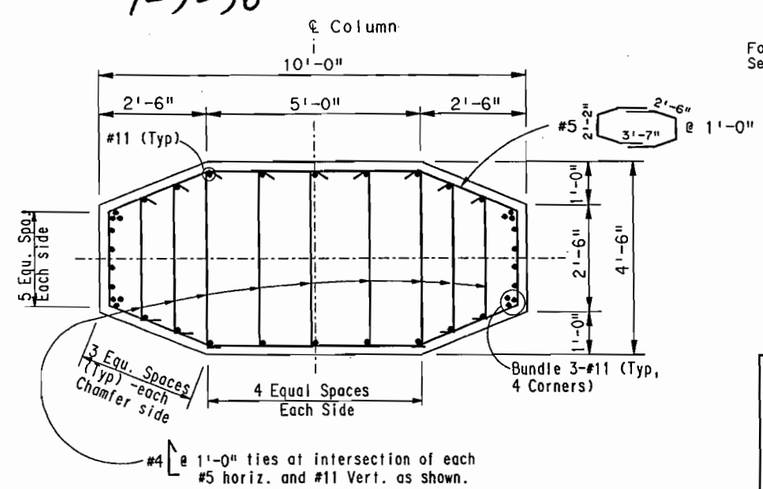

SECTION B-14 B

AS CONSTRUCTED			
NO REVISIONS		REVISED	VOID

FEDERAL ROAD REGION NO.	DIVISION	PROJECT NUMBER	SHEET NUMBER
VIII	COLORADO	1A06	124

REVISIONS			
A-1	4-02-90	Dimen. & Rebar for Cap & Brg. Seat	JHP
A-2	4-09-90	Elev. View Rebar In Cap	JHP
	- -		

INITIAL	DATE		
Designed By	JHP	1-90	Checked By
Checked By	DBW	1-90	Quantities By
Detailed By	GMC	1-90	Checked By
	JHP	2-90	
	AEG	3-90	
	JHP	3-90	
	DBW	3-90	

E-470
Engineer 470 Partnership

DIVISION OF HIGHWAYS
E-470/I-25 INTERCHANGE
RAMP "E" FLYOVER
PIER #4
DETAIL SHEET

Designer J. Peck		Structure Numbers	F - 17 - JW
Detailer G.Christnacht			
Drawing Number B-14	of	45	Drawings

$$$$$DGNSPEC$$$$$$$$$$$$$$$$
USERNAME
SY241$SGSAGE$94$$61)SEPRD0213.90M

RAMP E - PIER DETAIL SHEET 2
SEPRD0213.90M

ISSUED FOR CONSTRUCTION

7-9-90

AS CONSTRUCTED				
NO REVISIONS		REVISED		VOID

FEDERAL ROAD REGION NO.	DIVISION	PROJECT NUMBER	SHEET NUMBER
VIII	COLORADO	1A06/1802	125

REVISIONS		
- -		
- -		
- -		

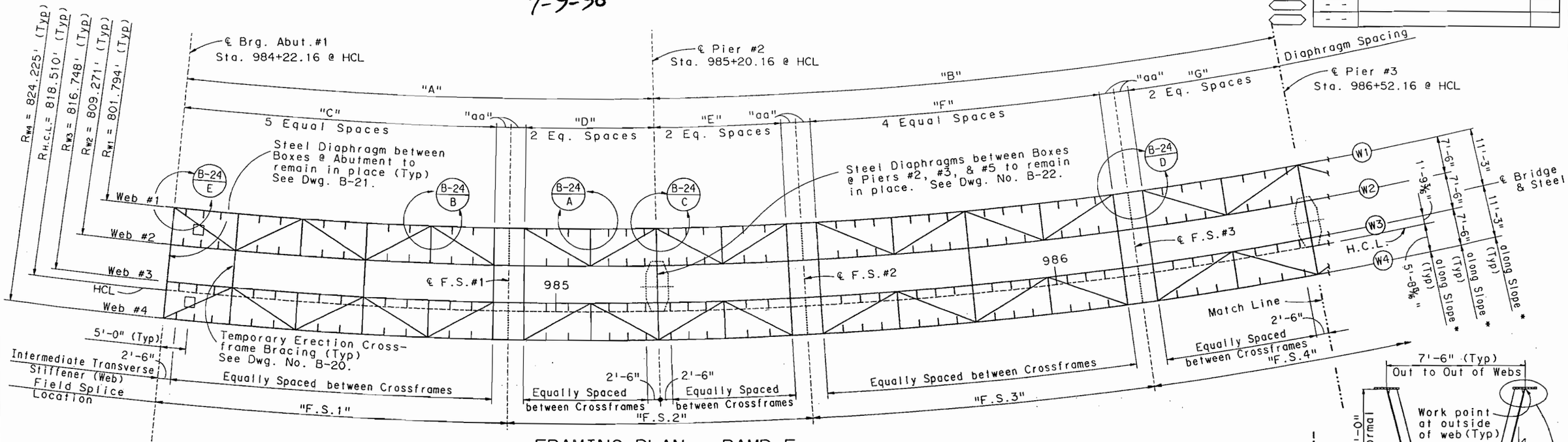

FRAMING PLAN - RAMP E

Partial Plan - Abut.#1 to ℄ Pier #3

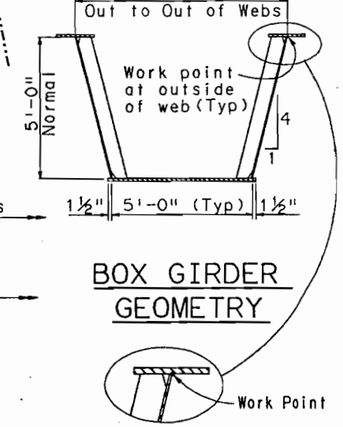

BOX GIRDER GEOMETRY

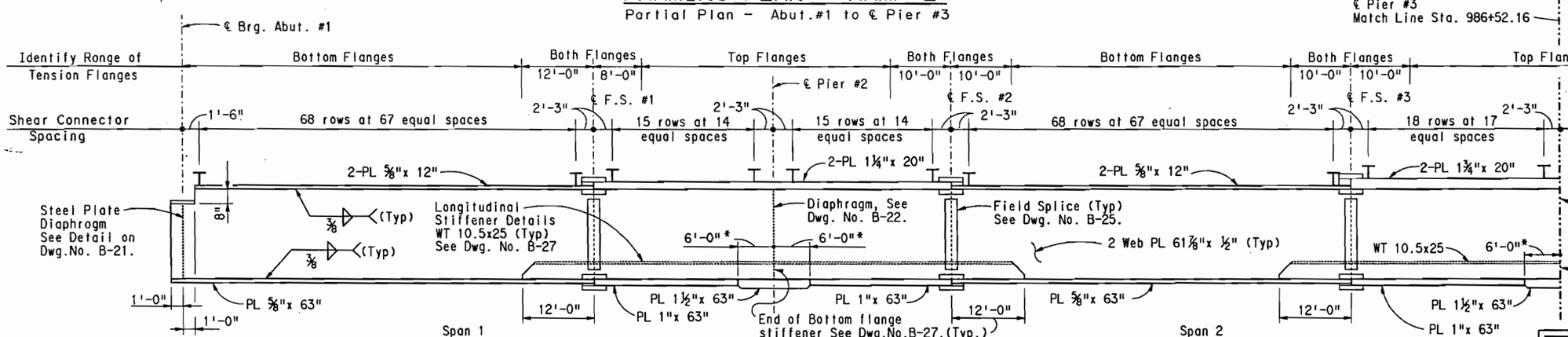

GIRDER ELEVATION

Partial Elev. - Abut.#1 to ℄ Pier #3

GIRDER DIMENSION SCHEDULE

DIMENSION	"A"	"B"	"C"	"D"	"E"	"F"	"G"	"aa"	"F.S.1"	"F.S.2"	"F.S.3"	"F.S.4"
WEB #1	96'-0"	129'-3⅝"	64'-0"	26'-0"	26'-0"	59'-3⅝"	32'-0"	3'-0"	67'-0"	58'-0"	65'-3⅝"	68'-0⅞"
WEB #2	96'-10⅝"	130'-6 "	64'-7⅛"	26'-2⅞"	26'-2⅞"	59'-10⅝"	32'-3⅜"	3'-0⅝"	67'-7⅞"	58'-6⅜"	65'-10⅝"	68'-8⅞"
WEB #3	97'-9⅞"	131'-8⅝"	65'-2¼"	26'-5⅝"	26'-5⅝"	60'-4⅝"	32'-7⅛"	3'-0 11/16"	68'-2⅝"	59'-1"	66'-6⅝"	69'-4⅛"
HCL & PGL	98'-0"	132'-0"	-	-	-	-	-	-	68'-4¾"	59'-2½"	66'-8"	69'-5⅝"
WEB #4	98'-8¼"	132'-11⅛"	65'-9½"	26'-8¾"	26'-8¾"	60'-11⅝"	32'-10¾"	3'-1"	68'-10½"	59'-7½"	67'-1⅜"	69'-11¾"

Note: All dimensions in table are at Top Outside of Webs.

Note: For froming plan notes See Dwg. No. B-16.

* 6'-0" Dimension shown is measured along ℄ of Bottom Flange from ℄ of Bearing at ℄ of Botom Flange.

E-470

Engineer 470 Partnership

DIVISION OF HIGHWAYS

I-25 / 470 INTERCHANGE
RAMP E FLYOVER
FRAMING PLAN AND GIRDER ELEVATION

Designer A. GRIFFITH		Structure Numbers	F - 17 - JW
Detailer A. GRIFFITH			
Drawing Number B-15	of	45	Drawings

	INITIAL	DATE
Designed By	AEG	1-90
Checked By	DBW	3-90
Detailed By	AEG	1-90

Checked By	AEG	2-90
Quantities By	JHP	3-90
Checked By	JHP	2-90
	AEG	2-90

USERNAME
SEFRM0113.90Q

RAMP E-FRAMING PLAN & ELEV SHT 1

SEFRM0113.90Q

ISSUED FOR CONSTRUCTION
7-9-90

AS CONSTRUCTED			
NO REVISIONS		REVISED	VOID

FEDERAL ROAD REGION NO.	DIVISION	PROJECT NUMBER	SHEET NUMBER
VIII	COLORADO	1A06/1802	126

REVISIONS		
- -		
- -		
- -		

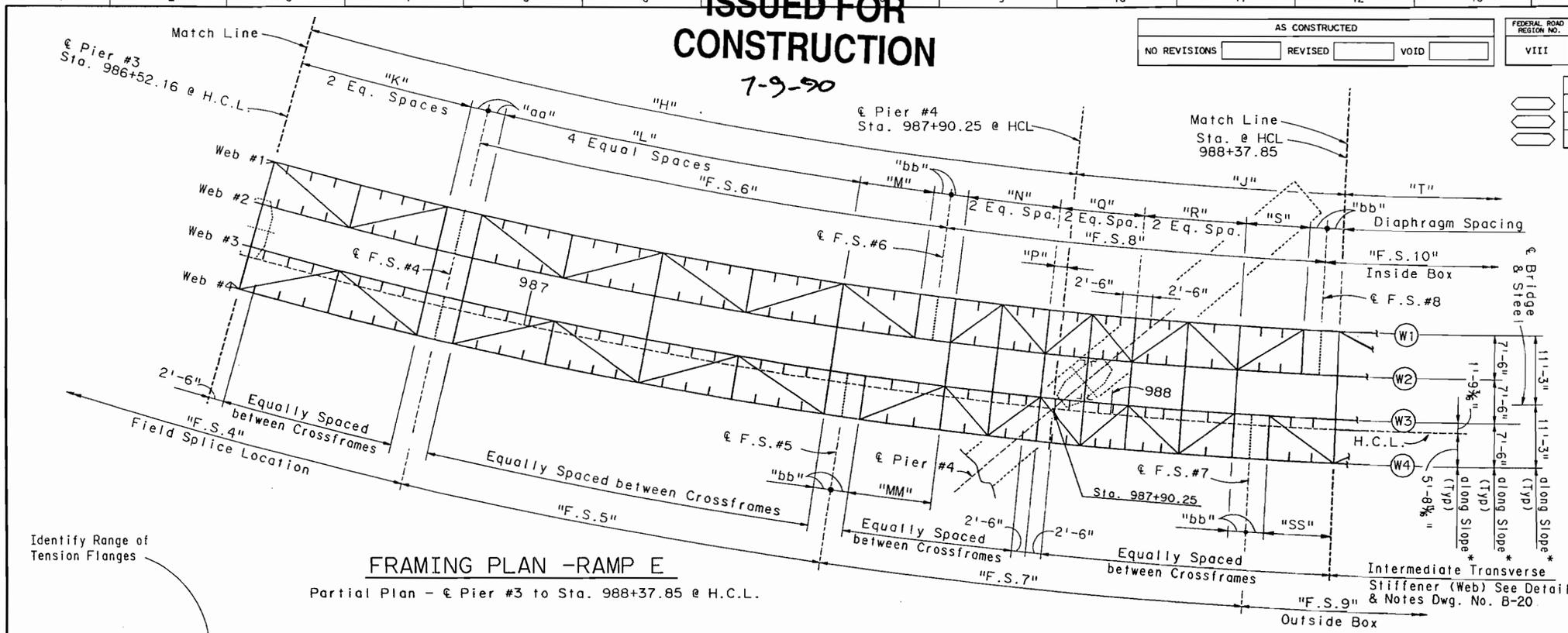

FRAMING PLAN -RAMP E

Partial Plan - ℄ Pier #3 to Sta. 988+37.85 @ H.C.L.

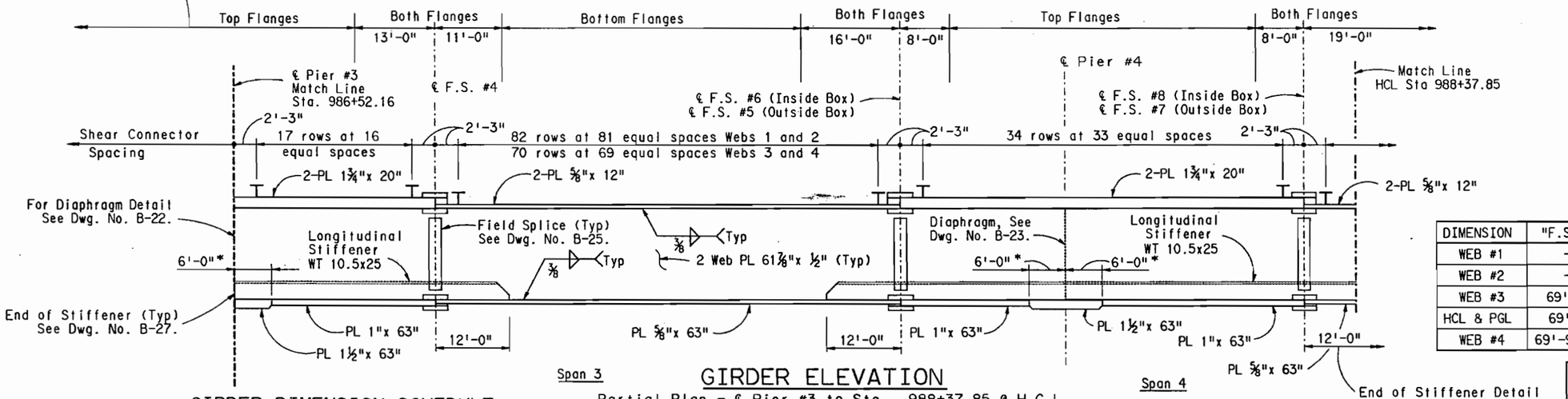

GIRDER ELEVATION

Partial Plan - ℄ Pier #3 to Sta. 988+37.85 @ H.C.L.

* Note: 6'-0" Dimension is measured along ℄ of Bottom Flange from ℄ of Bearing at ℄ of Bottom Flange.

FRAMING PLAN NOTES:

1. All plan dimensions are measured on a horizontal plane at 40° F, except dimensions marked with a * , which are measured along the slope of the structure.
2. All webs curve to a common center With the Horizontal Control Line.
3. All Stationing is measured along Horizontal Control Line.
4. For Typical Box Girder Geometry, see Drawing No. B-15.
5. For Camber of Girder Webs, see Drawing No. B-18 & B-19.
6. All Stiffeners and internal diaphragms are normal to girder unless noted otherwise. For Type of Stiffener, See Details, Dwg. No. B-20 to B-24.
7. Pier Diaphragm plates are parallel to Pier ℄, except at Pier #4.
8. Abutment end diaphragm plates to be vertical under dead load.
9. Provide 1½" diameter drainage hole in the bottom flange. See Dwg. No. B-27 for details and hole spacing.
10. For Typical Bracing details, see Drawing No. B-20 to B-24.
11. For Field Splice Details, See Drawing No. B-25.
12. For Bottom Flange Longitudinal Stiffener, See Dwg. No. B-27.
13. For top Flange filler plates See table, Dwg. No. B-25.
14. For Shear connection details, See Dwg. No. B-27.
15. For Access Manhole Details, See Dwg. No. B-27.
16. For Welding Details, See Dwg. No. B-27.

DIMENSION	"F.S.5"	F.S.6"	"F.S.7"	"F.S.8"
WEB #1	-	80'-9 5/16"	-	65'-0"
WEB #2	-	81'-6 5/16"	-	65'-7¼"
WEB #3	69'-2¼"	-	68'-2 11/16"	-
HCL & PGL	69'-4"	82'-6 3/16"	68'-4 5/16"	66'-4¼"
WEB #4	69'-9 15/16"	-	68'-10 1/16"	-

GIRDER DIMENSION SCHEDULE

DIMENSION	"H"	"J"	"K"	"L"	"M"	"MM"	"N"	"P"	"Q"	"R"	"S"	"SS"	"aa"	"bb"
WEB #1	135'-3 3/16"	46'-7 5/8"	30'-0 7/8"	62'-0"	12'-9 5/16"	-	16'-1 5/16"	2'-3 1/16"	14'-6 3/8"	17'-6"	10'-10 5/16"	-	3'-0"	3'-0"
WEB #2	136'-6¼"	47'-0 15/16"	30'-4¼"	62'-6 5/16"	12'-11 3/8"	-	16'-3 1/16"	2'-3 5/16"	14'-8"	17'-7 5/16"	10'-11 9/16"	-	3'-0 5/16"	3'-0 5/16"
WEB #3	137'-9½"	47'-6 3/16"	30'-7 5/8"	63'-1 7/8"	-	13'-2 15/16"	16'-4 7/8"	2'-3 9/16"	14'-9 5/8"	17'-10"	-	11'-2¾"	3'-0 11/16"	2'-11 11/16"
HCL & PGL	138'-1 1/16"	47'-7 3/16"	-	-	-	-	-	-	-	-	-	-	-	-
WEB #4	139'-0 9/16"	47'-11 5/16"	30'-11"	63'-8 5/16"	-	13'-4¼"	16-6 11/16"	2'-3 15/16"	14'-11¼"	17'-11 7/8"	-	11'-4"	3'-1"	3'-0"

Note: All dimensions in table are at Top Outside of Webs.

INITIAL	DATE	
Designed By AEG	1-90	Checked By AEG 2-90
Checked By DBW	3-90	Quantities By JHP 3-90
Detailed By AEG	1-90	Checked By JHP 2-90
		AEG 2-90

$$$$DGNSPEC$$$$$$$$$$$$$$$$$$
USERNAME
S:\24\1\SUSAN\E\174\961\SEFRN0213.900

E-470
Engineer 470 Partnership

DIVISION OF HIGHWAYS
I-25 / 470 INTERCHANGE
RAMP E FLYOVER
FRAMING PLAN AND GIRDER ELEVATION

Designer A. GRIFFITH	Structure Numbers	F - 17 - JW
Detailer A. GRIFFITH		
Drawing Number B-16 of 45 Drawings		

RAMP E-FRAMING PLAN & ELEV SHT 2

SEFRM0213.900

AS CONSTRUCTED				
NO REVISIONS		REVISED		VOID

FEDERAL ROAD REGION NO.	DIVISION	PROJECT NUMBER	SHEET NUMBER
VIII	COLORADO	1A06/1802	127

REVISIONS		
- -		
- -		
- -		

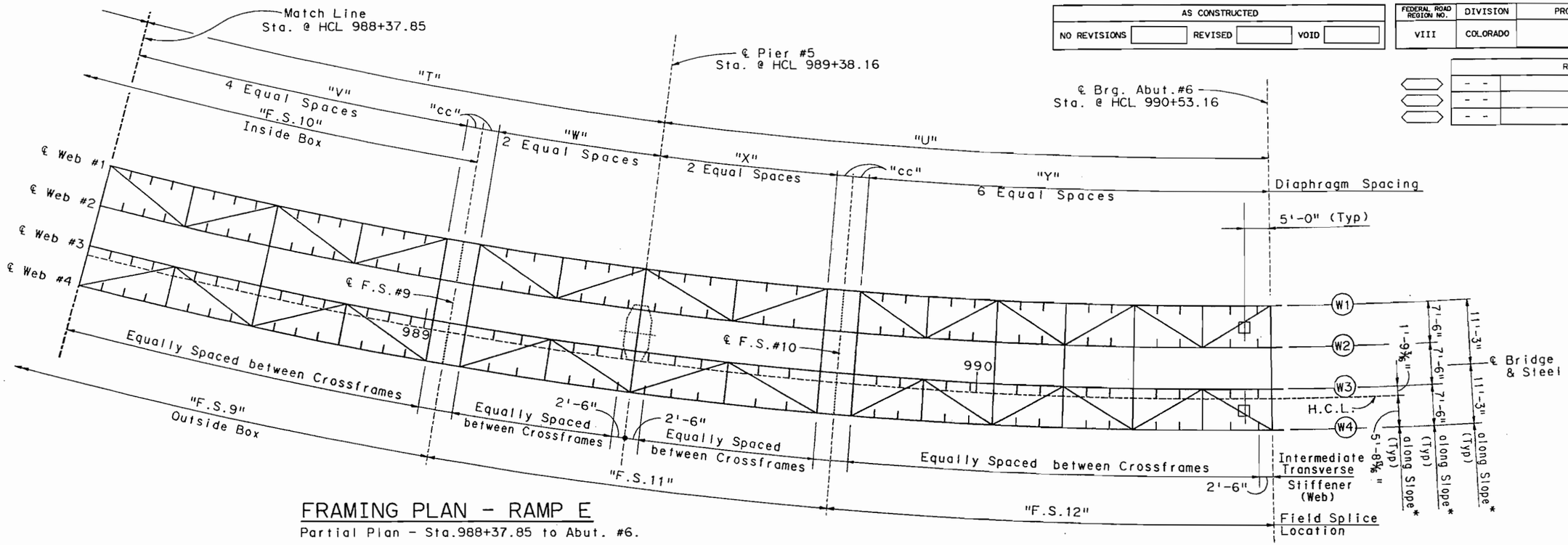

FRAMING PLAN - RAMP E

Partial Plan - Sta.988+37.85 to Abut. #6.

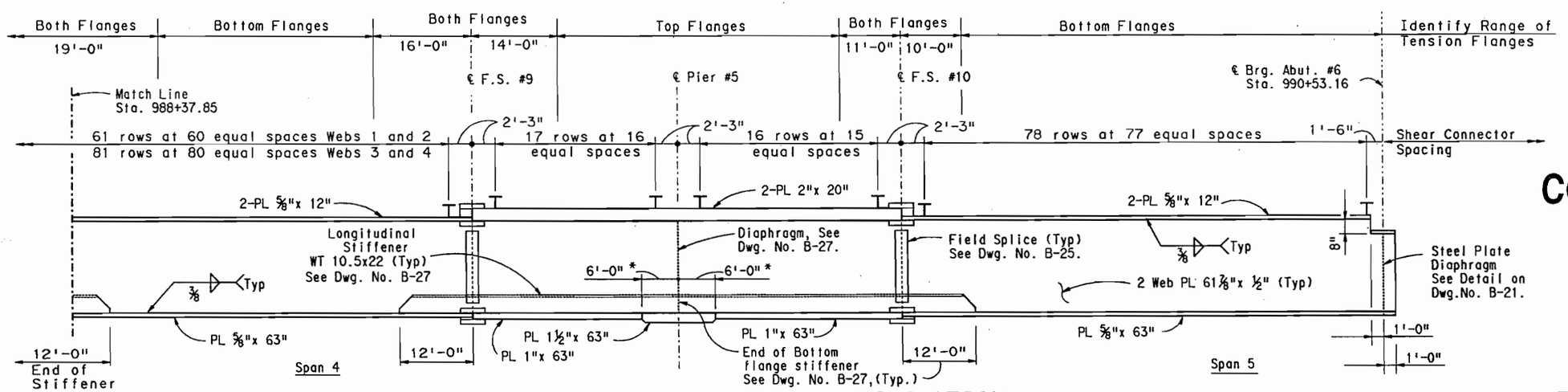

GIRDER ELEVATION

Partial Elev. - Sta. 988+37.85 to Abut.#6

* Note: 6'-0" Dimension is measured along ℄ Bottom Flange from ℄ of Bearing at ℄ of Bottom Flange.

GIRDER DIMENSION SCHEDULE

DIMENSION	"T"	"U"	"V"	"W"	"X"	"Y"	"cc"	"F.S.9"	"F.S.10"	"F.S.11"	"F.S.12"
WEB #1	98'-3⅛"	112'-7 15/16"	62'-3⅛"	30'-0"	33'-0"	73'-7 15/16"	3'-0"	-	68'-3⅛"	69'-0"	76'-7 15/16"
WEB #2	99'-2 1/16"	113'-8⅜"	62'-10 1/16"	30'-3⅜"	33'-3 11/16"	74'-4 1/16"	3'-0 5/16"	-	68'-10 11/16"	69'-7 11/16"	77'-4⅜"
WEB #3	100'-1⅛"	114'-9 1/16"	63'-5"	30'-6¾"	33'-7⅝"	75'-0 5/16"	3'-0 11/16"	80'-8⅛"	-	70'-3½"	78'-1"
HCL & PGL	100'-3¾"	115'-0"	-	-	-	-	-	80'-10¼"	69'-8⅛"	70'-5¼"	78'-3 "
WEB #4	101'-0 1/16"	115'-9⅝"	64'-0"	30'-10 1/16"	33'-11 1/16"	75'-8⅜"	3'-1"	81'-5"	-	70'-11⅛"	78'-9⅜"

Note: All Dimensions in table are at top outside of Webs.

See Additional Framing Plan notes on Dwg. No. B-16.

ISSUED FOR CONSTRUCTION
7-9-90

E-470
Engineer 470 Partnership

DIVISION OF HIGHWAYS
I-25 / 470 INTERCHANGE
RAMP E FLYOVER
FRAMING PLAN AND GIRDER ELEVATION

Designer A. GRIFFITH	Structure Numbers	F - 17 - JW	
Detailer A. GRIFFITH			
Drawing Number B-17 of 45 Drawings			

	INITIAL	DATE	Checked By	AEG	2-90
Designed By	AEG	1-90	Quantities By	JHP	3-90
Checked By	DBW	3-90	Checked By	JHP	2-90
Detailed By	AEG	1-90		AEG	2-90

USERNAME
S:\24\1\SQS\ME\#24#61\SEFRM0313.900

RAMP E-FRAMING PLAN & ELEV SHT 3

SEFRM0313.90Q

AS CONSTRUCTED			
NO REVISIONS		REVISED		VOID	

FEDERAL ROAD REGION NO.	DIVISION	PROJECT NUMBER	SHEET NUMBER
VIII	COLORADO	1A06/1B02	128

REVISIONS		
- -		
- -		
- -		

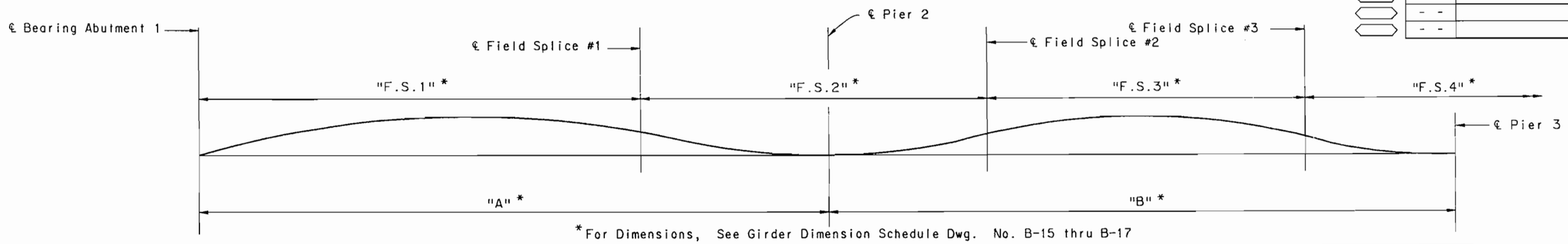

*For Dimensions, See Girder Dimension Schedule Dwg. No. B-15 thru B-17

TWENTIETH POINT	1.000	1.050	1.100	1.150	1.200	1.250	1.300	1.350	1.400	1.450	1.500	1.550	1.600	1.650	1.700	1.750	1.800	1.850	1.900	1.950	2.000	2.050	2.100	2.150	2.200	2.250	2.300	2.350	2.400	2.450	2.500	2.550	2.600	2.650	2.700	2.750	2.800	2.850	2.900	2.950	3.000	
GIRDER D.L. DEFLECTION (FT)	0.000	0.003	0.006	0.008	0.010	0.012	0.014	0.014	0.015	0.015	0.014	0.013	0.011	0.010	0.008	0.006	0.005	0.003	0.001	0.001	0.000	0.000	0.001	0.003	0.004	0.006	0.008	0.010	0.012	0.012	0.011	0.010	0.009	0.007	0.005	0.003	0.002	-.000	-.001	-.001	0.000	(Inside Box)
TOTAL D.L.LESS GIRDER D.L.DEFLECTION(FT)	0.000	0.014	0.027	0.039	0.050	0.058	0.063	0.067	0.069	0.068	0.066	0.060	0.053	0.045	0.037	0.025	0.021	0.010	0.004	0.002	0.000	0.001	0.005	0.013	0.022	0.030	0.038	0.046	0.052	0.054	0.052	0.048	0.041	0.032	0.022	0.013	0.005	-.002	-.007	-.006	0.000	
TOTAL D.L. DEFLECTION (FT)	0.000	0.017	0.033	0.047	0.060	0.070	0.077	0.081	0.084	0.083	0.080	0.073	0.064	0.055	0.045	0.031	0.026	0.013	0.005	0.003	0.000	0.001	0.006	0.016	0.026	0.036	0.046	0.056	0.063	0.066	0.063	0.058	0.050	0.039	0.027	0.016	0.007	-.002	-.008	-.007	0.000	
GIRDER D.L. DEFLECTION (FT)	0.000	0.003	0.006	0.008	0.010	0.012	0.013	0.013	0.013	0.012	0.012	0.010	0.009	0.007	0.006	0.005	0.003	0.002	0.001	0.000	0.000	0.001	0.003	0.006	0.009	0.013	0.015	0.018	0.021	0.023	0.023	0.022	0.021	0.018	0.015	0.013	0.006	0.003	0.001	0.000	0.000	(Outside Box)
TOTAL D.L.LESS GIRDER D.L.DEFLECTION(FT)	0.000	0.013	0.025	0.037	0.047	0.054	0.059	0.062	0.063	0.062	0.058	0.053	0.046	0.038	0.030	0.022	0.015	0.008	0.002	0.000	0.000	0.005	0.014	0.027	0.041	0.054	0.068	0.082	0.092	0.097	0.099	0.096	0.089	0.075	0.056	0.045	0.027	0.014	0.005	0.000	0.000	
TOTAL D.L. DEFLECTION (FT)	0.000	0.016	0.031	0.045	0.057	0.066	0.072	0.075	0.076	0.074	0.070	0.063	0.055	0.045	0.036	0.027	0.018	0.010	0.003	0.000	0.000	0.006	0.017	0.033	0.050	0.067	0.083	0.100	0.113	0.120	0.122	0.118	0.110	0.096	0.071	0.058	0.033	0.017	0.006	0.000	0.000	

SPANS 1 & 2

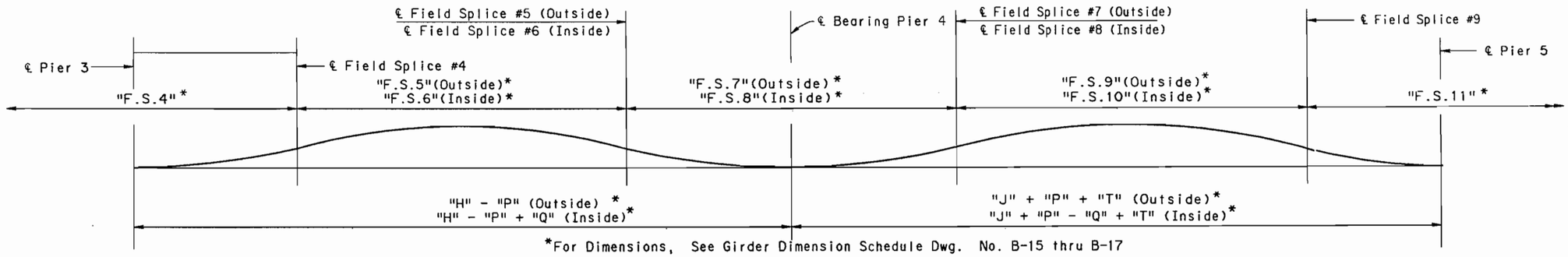

*For Dimensions, See Girder Dimension Schedule Dwg. No. B-15 thru B-17

TWENTIETH POINT	3.000	3.050	3.100	3.150	3.200	3.250	3.300	3.350	3.400	3.450	3.500	3.550	3.600	3.650	3.700	3.750	3.800	3.850	3.900	3.950	4.000	4.050	4.100	4.150	4.200	4.250	4.300	4.350	4.400	4.450	4.500	4.550	4.600	4.650	4.700	4.750	4.800	4.850	4.900	4.950	5.000	
GIRDER D.L. DEFLECTION (FT)	0.000	0.003	0.007	0.011	0.016	0.022	0.028	0.033	0.037	0.042	0.043	0.045	0.040	0.038	0.031	0.026	0.018	0.009	0.004	0.000	0.000	-.002	-.002	-.002	-.001	0.000	0.002	0.003	0.005	0.006	0.006	0.006	0.006	0.004	0.003	0.002	0.000	-.001	-.002	-.001	0.000	(Inside Box)
TOTAL D.L.LESS GIRDER D.L.DEFLECTION(FT)	0.000	0.015	0.034	0.060	0.089	0.116	0.142	0.167	0.185	0.198	0.201	0.199	0.175	0.147	0.119	0.094	0.077	0.039	0.016	0.000	0.000	-.007	-.010	-.008	-.004	0.003	0.011	0.019	0.025	0.030	0.033	0.032	0.028	0.022	0.015	0.008	0.003	-.002	-.006	-.006	0.000	
TOTAL D.L. DEFLECTION (FT)	0.000	0.018	0.041	0.077	0.105	0.138	0.170	0.200	0.222	0.240	0.244	0.244	0.215	0.185	0.150	0.120	0.095	0.048	0.020	0.000	0.000	-.009	-.012	-.010	-.005	0.003	0.013	0.022	0.030	0.036	0.039	0.038	0.034	0.026	0.018	0.010	0.003	-.003	-.008	-.007	0.000	
GIRDER D.L. DEFLECTION (FT)	0.000	0.001	0.001	0.004	0.007	0.009	0.011	0.013	0.015	0.017	0.017	0.016	0.015	0.012	0.009	0.006	0.004	0.002	0.002	0.001	0.000	0.002	0.006	0.010	0.016	0.021	0.027	0.031	0.034	0.036	0.037	0.036	0.033	0.029	0.023	0.019	0.014	0.009	0.005	0.001	0.000	(Outside Box)
TOTAL D.L.LESS GIRDER D.L.DEFLECTION(FT)	0.000	0.002	0.007	0.017	0.028	0.040	0.051	0.062	0.072	0.076	0.077	0.073	0.067	0.050	0.034	0.024	0.012	0.003	0.003	0.002	0.000	0.010	0.026	0.049	0.072	0.100	0.124	0.141	0.156	0.167	0.167	0.162	0.142	0.121	0.110	0.068	0.053	0.031	0.015	0.008	0.000	
TOTAL D.L. DEFLECTION (FT)	0.000	0.003	0.008	0.021	0.035	0.049	0.062	0.075	0.087	0.093	0.094	0.089	0.082	0.062	0.043	0.030	0.016	0.005	0.005	0.003	0.000	0.012	0.032	0.059	0.088	0.121	0.151	0.172	0.190	0.203	0.204	0.198	0.175	0.150	0.133	0.087	0.067	0.040	0.020	0.009	0.000	

SPANS 3 & 4

ISSUED FOR CONSTRUCTION

7-9-90

E-470

Engineer 470 Partnership

DIVISION OF HIGHWAYS

I-25 / 470 INTERCHANGE
RAMP E FLYOVER
CAMBER CUTTING DIAGRAM

Designer A. GRIFFITH	Structure Numbers	F - 17 - JW	
Detailer A. GRIFFITH			
Drawing Number B-18 of 45 Drawings			

	INITIAL	DATE	Checked By	
Designed By	AEG	1-90	GMC	1-90
Checked By	GNT	1-90	Quantities By	AEG 2-90
Detailed By	GMC	1-90	Checked By	DBW 2-90

$$$$DGNSPEC$$$$$$$$$$$$$$$$
USERNAME
SY2411SQSAWE$$94}61}SECAM0113.90R

CAMBER CUTTING DIAGRAM SHT 1 OF 2

SECAM0113.90R

AS CONSTRUCTED			
NO REVISIONS		REVISED	VOID

FEDERAL ROAD REGION NO.	DIVISION	PROJECT NUMBER	SHEET NUMBER
VIII	COLORADO	1A06 / 1802	129

REVISIONS		
- -		
- -		
- -		

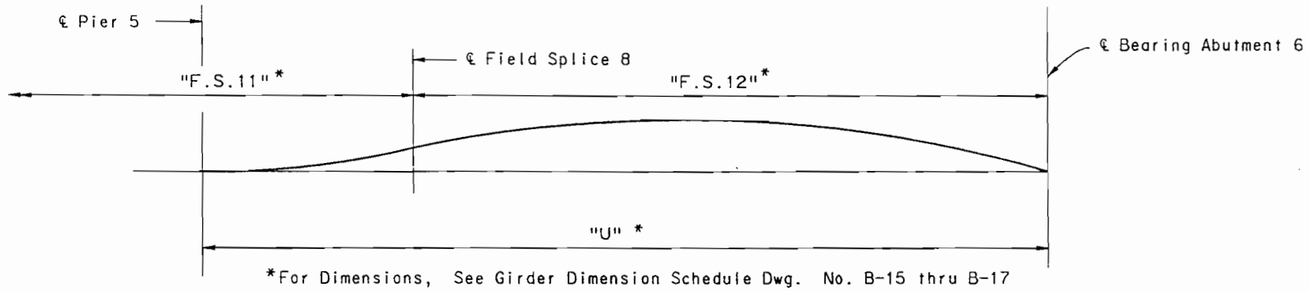

*For Dimensions, See Girder Dimension Schedule Dwg. No. B-15 thru B-17

TWENTIETH POINT	5.000	5.050	5.100	5.150	5.200	5.250	5.300	5.350	5.400	5.450	5.500	5.550	5.600	5.650	5.700	5.750	5.800	5.850	5.900	5.950	6.000	
GIRDER D.L. DEFLECTION (FT)	0.000	0.002	0.005	0.008	0.012	0.016	0.020	0.023	0.027	0.029	0.031	0.032	0.033	0.032	0.029	0.027	0.022	0.017	0.008	0.000	0.000	Inside Box
TOTAL D.L.LESS GIRDER D.L.DEFLECTION(FT)	0.000	0.009	0.020	0.034	0.051	0.068	0.085	0.101	0.116	0.130	0.139	0.144	0.144	0.140	0.126	0.110	0.088	0.060	0.032	0.000	0.000	
TOTAL D.L. DEFLECTION (FT)	0.000	0.011	0.025	0.042	0.063	0.084	0.105	0.124	0.143	0.159	0.170	0.176	0.177	0.172	0.155	0.137	0.110	0.077	0.040	0.000	0.000	
GIRDER D.L. DEFLECTION (FT)	0.000	0.000	0.001	0.003	0.006	0.009	0.012	0.015	0.018	0.021	0.023	0.025	0.025	0.024	0.023	0.022	0.019	0.015	0.005	0.000	0.000	Outside Box
TOTAL D.L.LESS GIRDER D.L.DEFLECTION(FT)	0.000	0.001	0.006	0.014	0.027	0.040	0.053	0.066	0.080	0.093	0.103	0.109	0.113	0.113	0.107	0.088	0.076	0.055	0.025	0.010	0.000	
TOTAL D.L. DEFLECTION (FT)	0.000	0.001	0.007	0.017	0.033	0.049	0.064	0.081	0.098	0.114	0.126	0.134	0.138	0.137	0.130	0.110	0.095	0.070	0.030	0.010	0.000	

SPAN 5

ISSUED FOR CONSTRUCTION

7-9-90

	INITIAL	DATE
Designed By	AEG	1-90
Checked By	GNT	1-90
Detailed By	GMC	1-90
Quantities By	AEG	2-90
Checked By	DBW	2-90

USERNAME:
S:\241\1\SCAM\0241\61\SECAM0213.90R

E-470

Engineer 470 Partnership

DIVISION OF HIGHWAYS

I-25 / 470 INTERCHANGE
RAMP E FLYOVER
CAMBER CUTTING DIAGRAM

Designer A. GRIFFITH	Structure Numbers	F - 17 - JW	
Detailer A. GRIFFITH			
Drawing Number B-19 of 45 Drawings			

AS CONSTRUCTED			
NO REVISIONS		REVISED	VOID

FEDERAL ROAD REGION NO.	DIVISION	PROJECT NUMBER	SHEET NUMBER
VIII	COLORADO	1A06/1802	130

REVISIONS		
- -		
- -		
- -		

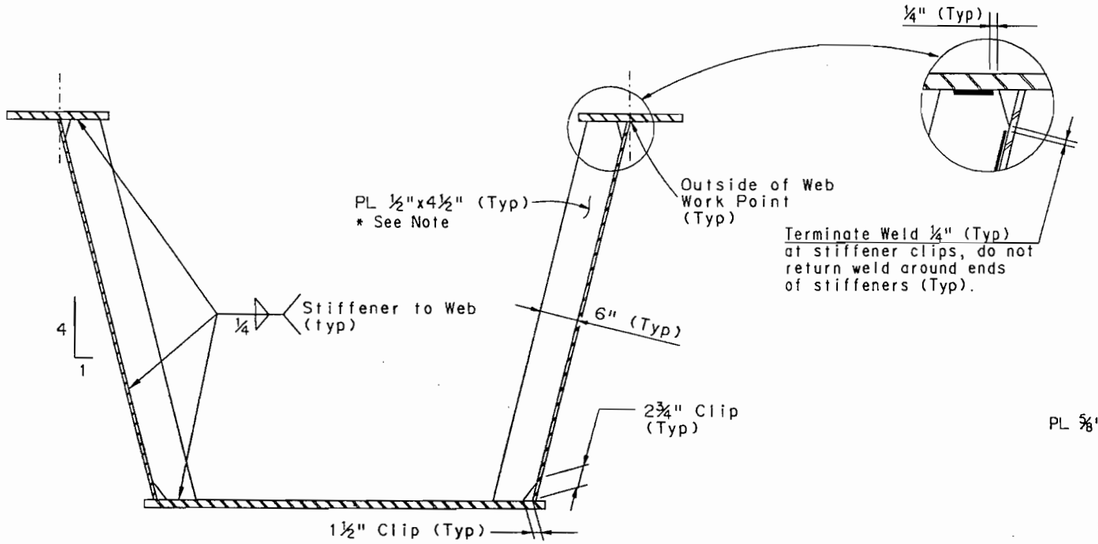

INTERMEDIATE STIFFENER #1 & #6

* Note: The first Intermediate Stiffeners located 2'-6" from ℄ Brg. of Abutment (#1 & #6), and Lateral Bracing supports are ⅝" x 6" (See crossframe Detail Below). At Abutments (#1 & #6) Diaphragms and Pier (#2, #3, #4 and #5) Diaphragms, solid diaphragm plate between webs shall be used as shown in Details on Dwg. No. B-21, B-22 and B-23.

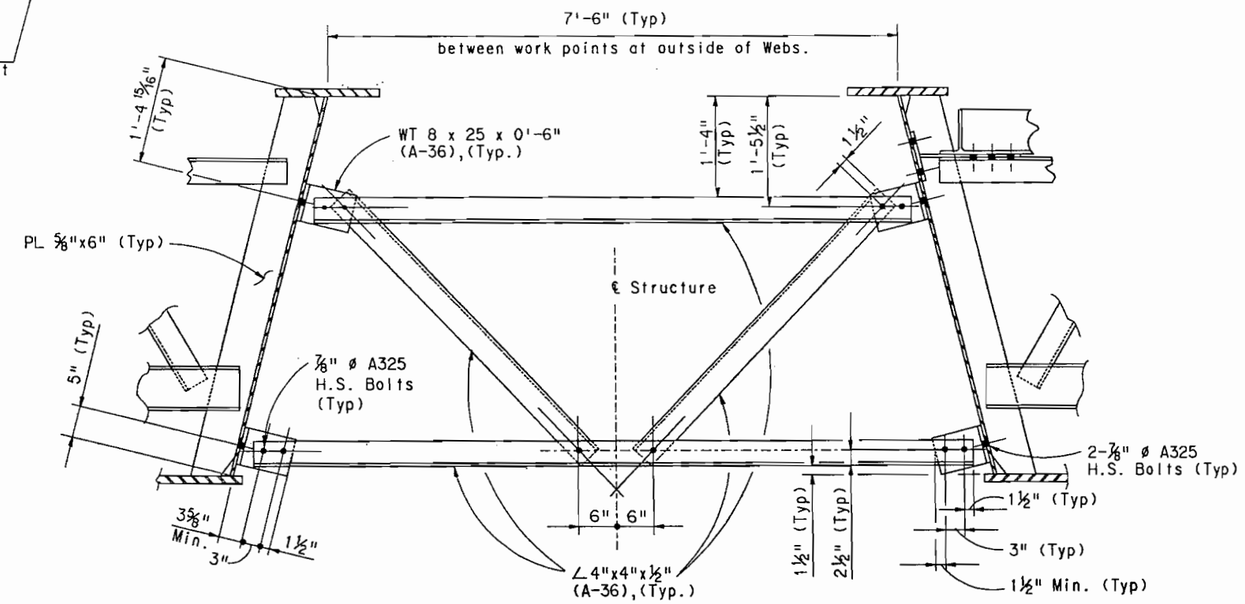

TEMPORARY ERECTION CROSS-FRAME

Note: Cross-frame between box girders shall be in place during placement and curing of deck, (until slab has reached its 28-Day design strength) after which these diaphragms shall be removed, with the exception of ⅞" ø H.S. bolts through the web, which shall be torqued to required Fastener Tension according to Std. Specification.

ISSUED FOR CONSTRUCTION

7-9-90

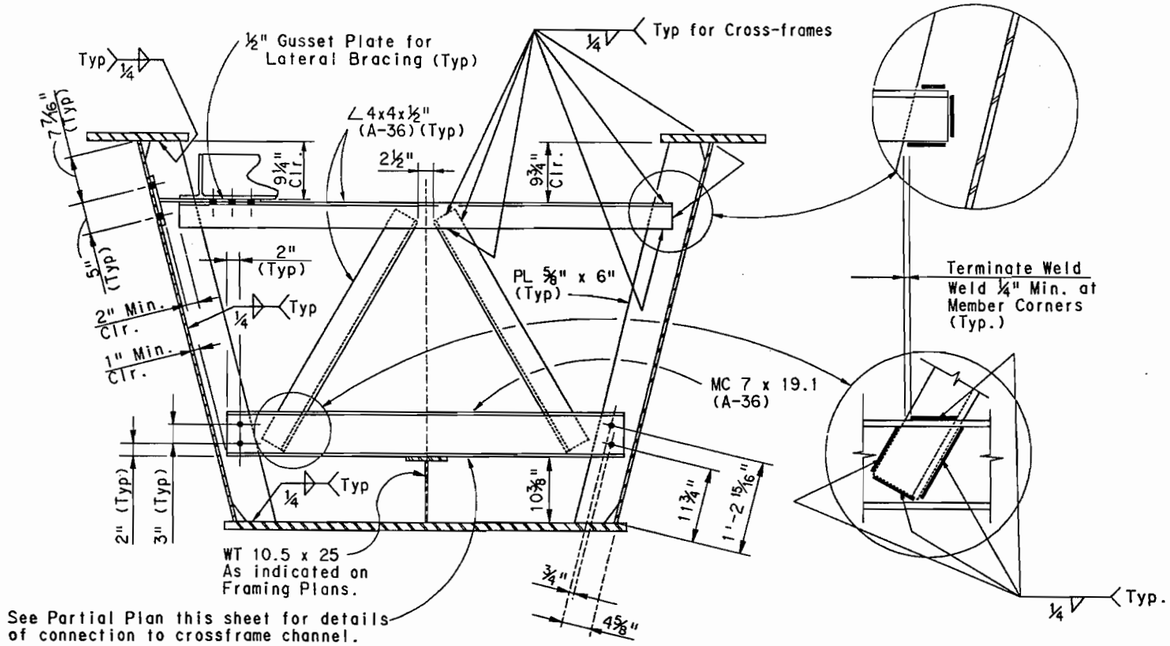

See Partial Plan this sheet for details of connection to crossframe channel.

CROSSFRAME DETAIL

Note: Terminate Welds for Stiffeners attached to Web similar to Detail shown above for Intermediate Stiffener.

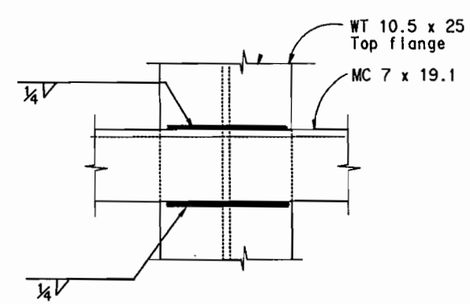

PARTIAL PLAN

WELD NOTES:

1. Terminate Weld ¼" short of Stiffener end. Do not return Weld around end of Stiffener, (Typ).
2. Weld all Bottom Flange Longitudinal Stiffeners to all Cross frame channels where stiffener is present.

INITIAL	DATE		
Designed By	AEG	1-90	Checked By	AEG	2-90
Checked By	JHP	1-90	Quantities By	JHP	2-90
Detailed By	GMC	1-90	Checked By	AEG	2-90

E-470

Engineer 470 Partnership

DIVISION OF HIGHWAYS

I-25 / 470 INTERCHANGE
RAMP E FLYOVER
INTERMEDIATE STIFFENER
AND CROSS-FRAME DETAILS

Designer A. Griffith	Structure Numbers	F - 17 - JW	
Detailer G.Christnacht			
Drawing Number B-20 of 45 Drawings			

$$$$$DGNSPEC$$$$$$$$$$$$$$$
USERNAME
$$$$$$$$$$$$$$$$$$$$$$$$$$$

CROSS-FRAME & STIFFENER DETAILS

SEDIA0313.90R

AS CONSTRUCTED			
NO REVISIONS		REVISED	VOID

FEDERAL ROAD REGION NO.	DIVISION	PROJECT NUMBER	SHEET NUMBER
VIII	COLORADO	1A06	131

REVISIONS			
A-1	4-02-90	Dimensions & Jacking pt.	AEG
	- -		
	- -		

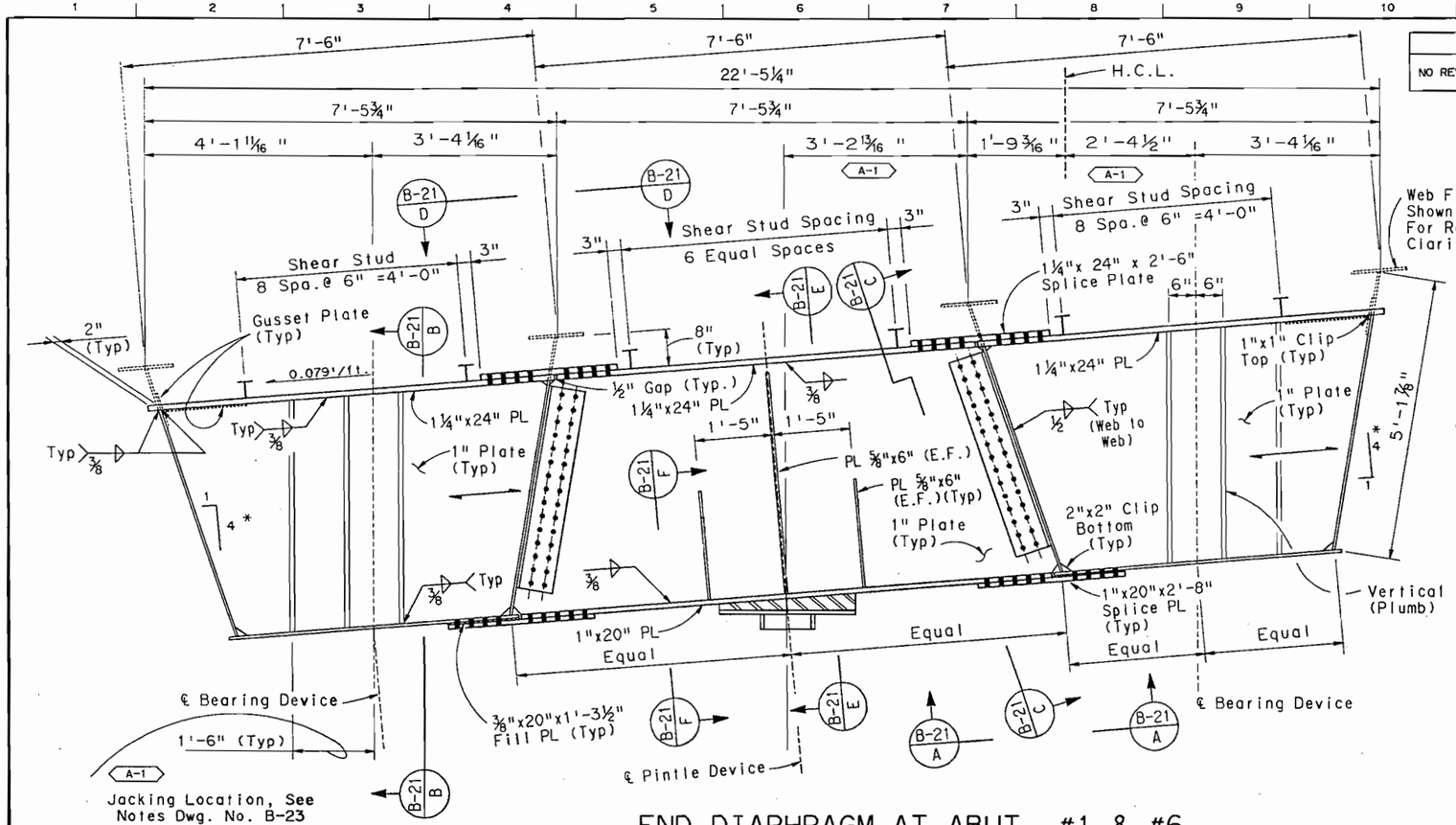

END DIAPHRAGM AT ABUT. #1 & #6

Note: Lateral Bracing Details Not Shown for Clarity, See Details Shown on Dwg. No. B-20 thru B-24.
For Additional Diaphragm Notes, See Dwg. No. B-22.
* Relative to Box Geometry

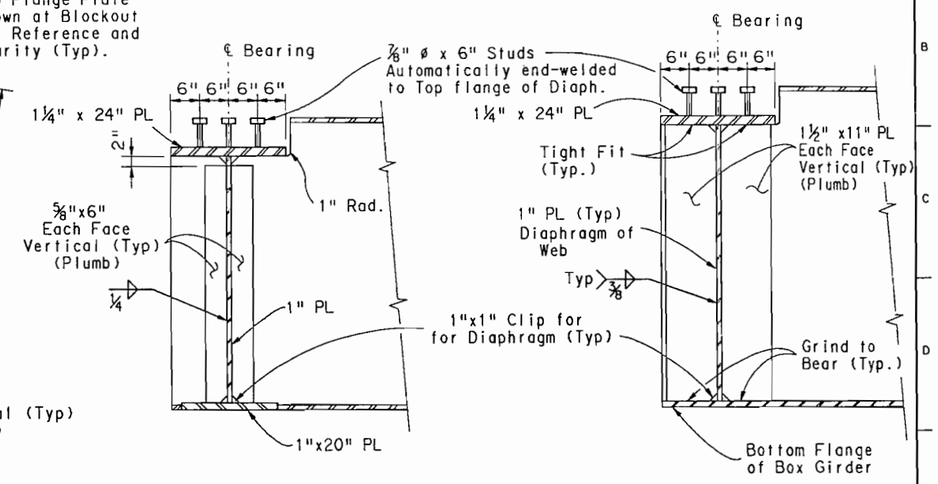

SECTION B-21 E

SECTION B-21 B

ISSUED FOR CONSTRUCTION
7-9-90

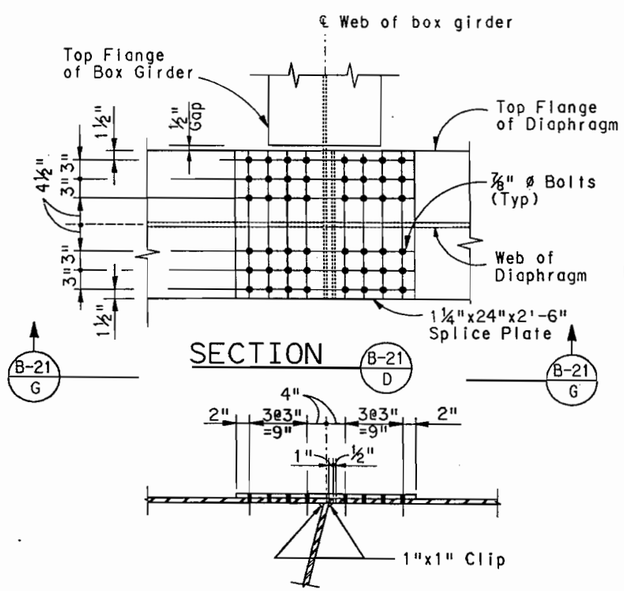

SECTION B-21 D

SECTION B-21 G

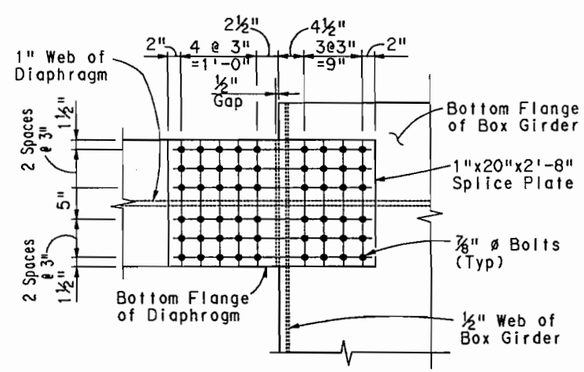

SECTION B-21 A

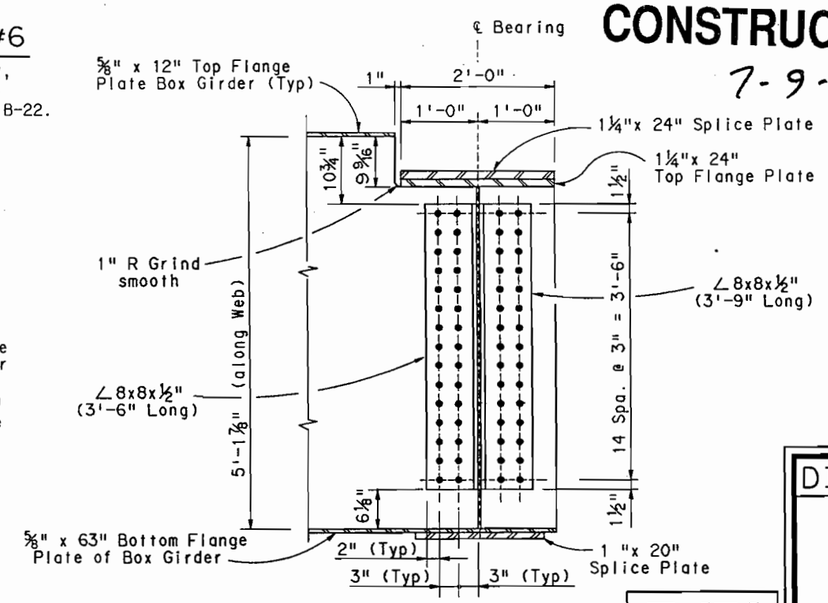

SECTION B-21 C
Dimensions along Web

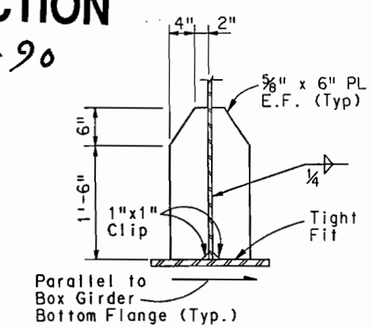

SECTION B-21 F

E-470
Engineer 470 Partnership

DIVISION OF HIGHWAYS
I-25/470 INTERCHANGE
RAMP E FLYOVER
END DIAPHRAGM DETAILS
ABUTMENTS #1 & #6

Designer A. Griffith		Structure Numbers	F - 17 - JW
Detailer G.Christnacht			
Drawing Number B-21	of		Drawings

	INITIAL	DATE
Designed By	ALG	2-90
Checked By	JHP	3-90
Detailed By	GMC	2-90
Checked By	ALG	2-90
Quantities By	JHP	3-90
Checked By	AEG	2-90

$$$$DGNSPEC$$$$$$$$$$$$$$$$
USERNAME
ST241F$SAJBE6197241961|SEDIA0213.90R

ABUTMENT DIAPHRAGM DETAILS
SEDIA0213.90R

AS CONSTRUCTED			
NO REVISIONS		REVISED	VOID

FEDERAL ROAD REGION NO.	DIVISION	PROJECT NUMBER	SHEET NUMBER
VIII	COLORADO	1A06	132

REVISIONS		
A-2 4-09-90	Weld Size, Box Web to Diaph. Web	AEG
- -		
- -		

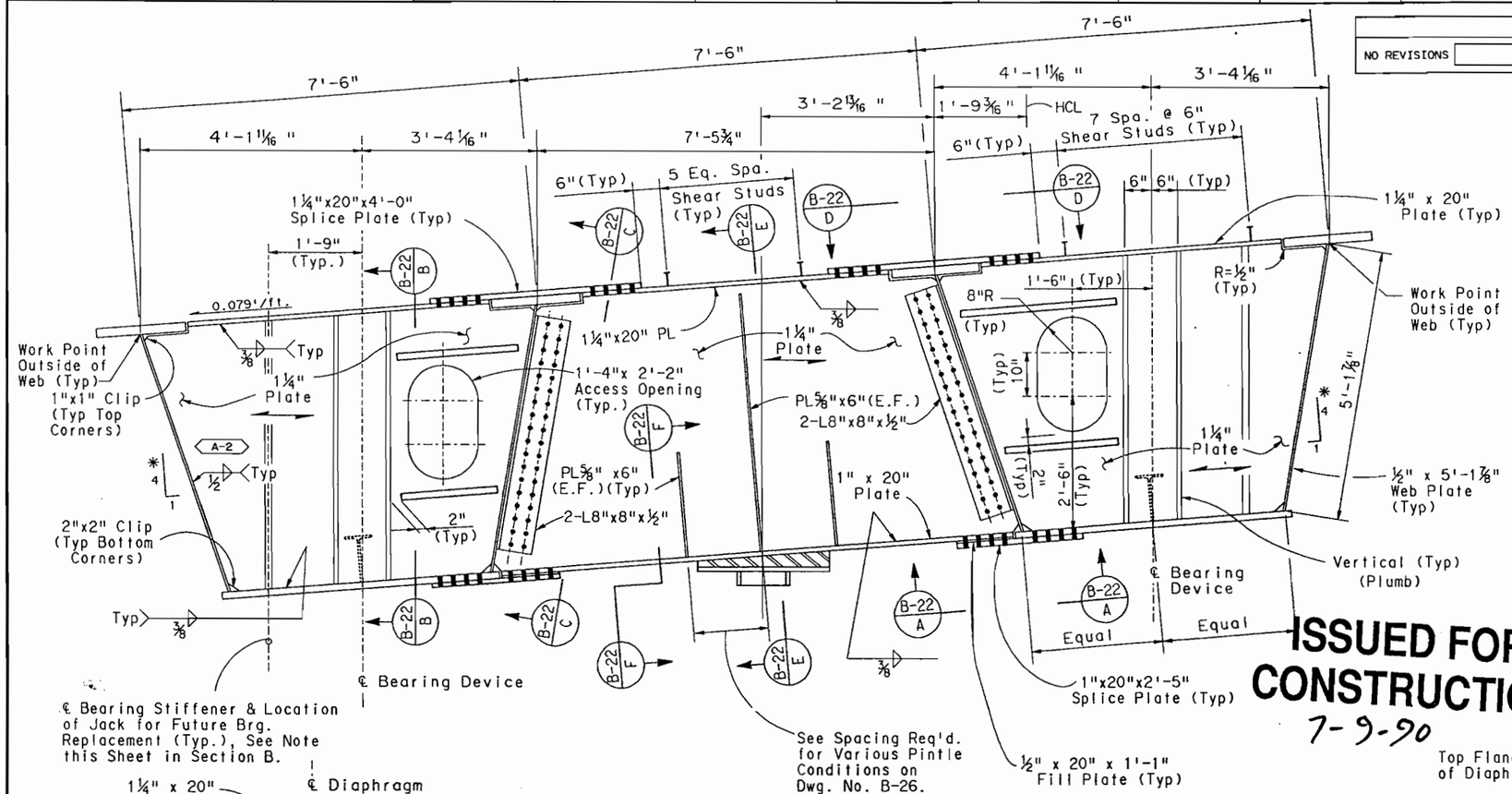

ISSUED FOR CONSTRUCTION
7-9-90

INTERIOR DIAPHRAGM AT PIERS #2, #3 & #5

* Relative to Box Geometry

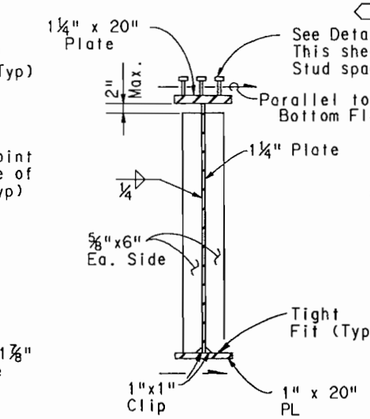

SECTION B-22 E

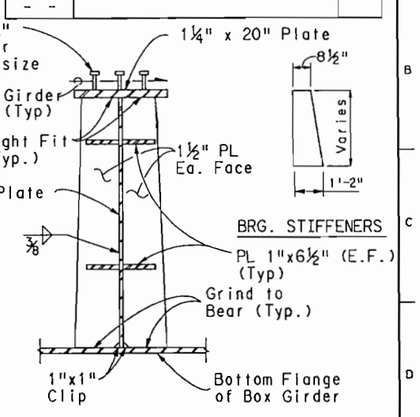

SECTION B-22 B

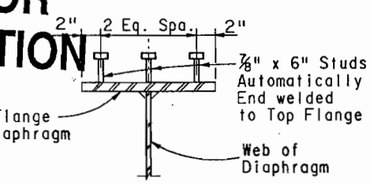

DETAIL "A"

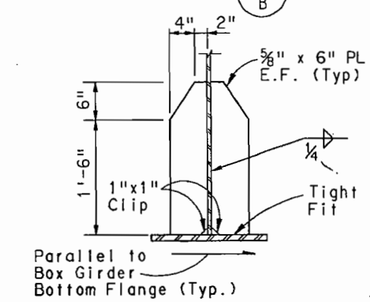

SECTION B-22 F

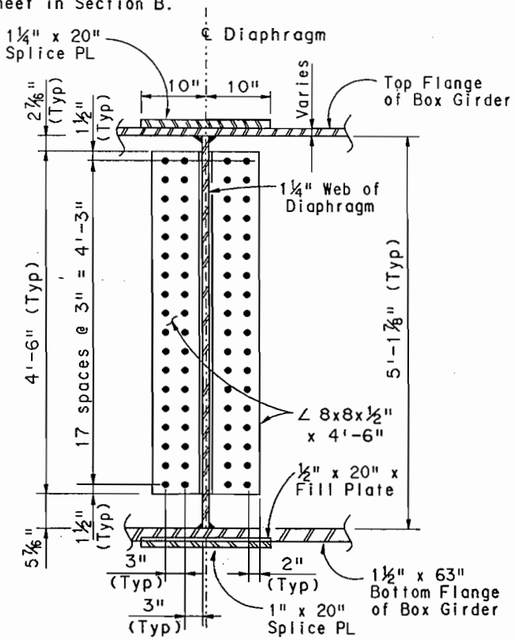

SECTION B-22 C

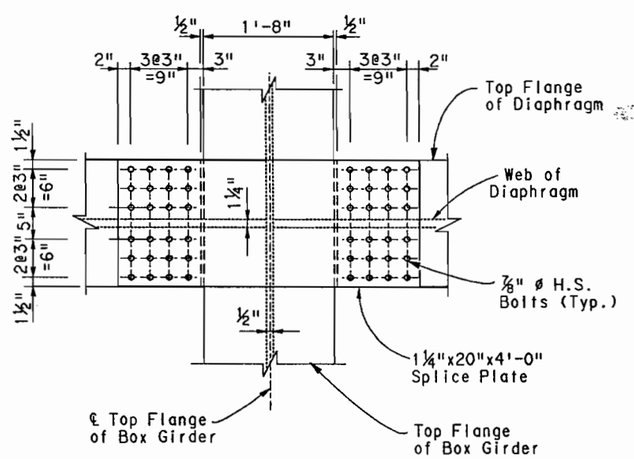

SECTION B-22 D

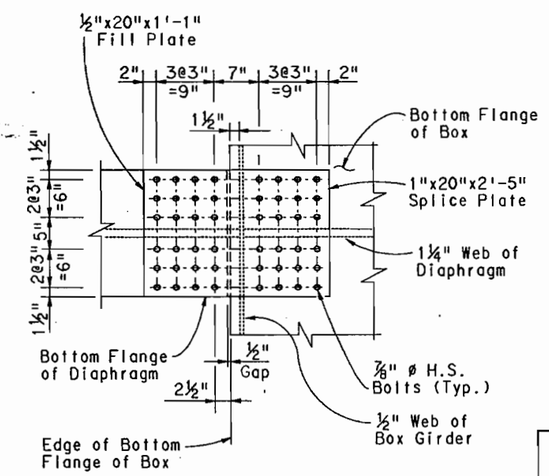

SECTION B-22 A

NOTES:

1. For Box Girder Geometry, See Dwg. No. B-15.
2. For Bearing Device Details, See Dwg. No. B-35 & B-36.
3. For Pintle Details, See Dwg. No. B-26.
4. Raising of Superstructure for Bearing Replacement to be done without Live Load on Deck. Jack only one bearing at a time.
5. ——— = Primary Direction of Rolling for Steel Plates as Fabricated in Mill.
6. Lateral bracing not shown for clarity. See Dwg. No. B-24.
7. Steel for Shear connectors shall be AASHTO M-169, (ASTM A-103).

E-470

Engineer 470 Partnership

DIVISION OF HIGHWAYS

I-25/470 INTERCHANGE
RAMP E FLYOVER
INTERIOR DIAPHRAGM DETAILS
PIERS #2,3,& #5

Designer A. Griffith		Structure Numbers	F - 17 - JW
Detailer G.Christnacht			
Drawing Number B-22	of 45	Drawings	

	INITIAL	DATE	Checked By	AEG	2-90
Designed By	AEG	1-90	JHP	3-90	
Checked By	JHP	3-90	Quantities By	JHP	2-90
Detailed By	GMC	1-90	Checked By	AEG	2-90

$$$$DGNSPEC$$$$$$$$$$$$$$$$
USERNAME
S:\241\505\BE\974\961\SEDIA0113.90R

PIER DIAPHRAGM DETAILS

SFDIA0113.90R

AS CONSTRUCTED			
NO REVISIONS		REVISED		VOID	

FEDERAL ROAD REGION NO.	DIVISION	PROJECT NUMBER	SHEET NUMBER
VIII	COLORADO	1A06/1802	133

REVISIONS		
- -		
- -		
- -		

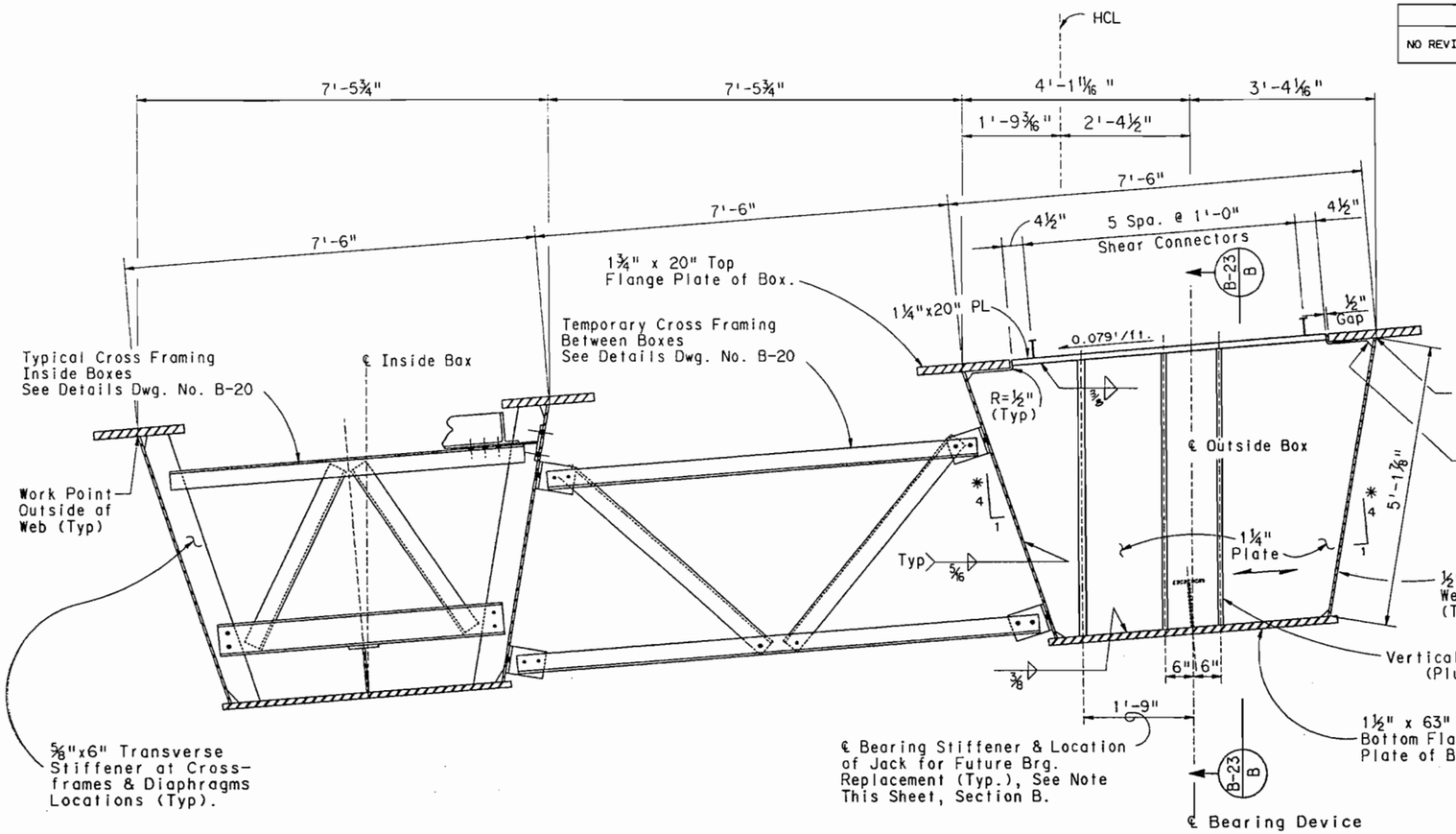

NOTES:

1. For Box Girder Geometry, See Dwg. No. B-15.
2. For Bearing Device Details, See Dwg. No. B-35 & B-36.
3. Raising of Superstructure for Bearing Replacement to be done without Live Load on Deck. Jack only one bearing at a time.
4. ——— = Primary Direction of Rolling for Steel Plates as Fabricated in Mill.
5. Steel for Shear connectors shall be AASHTO M-169, (ASTM A-103).

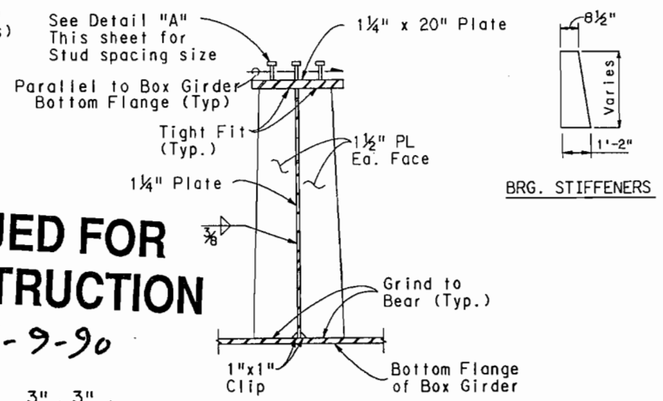

ISSUED FOR CONSTRUCTION
7-9-90

SECTION B-23 B

INTERIOR DIAPHRAGM @ PIER #4 (RADIAL)

NOTE: Bearing Diaphragm @ Pier #4 for Outside Box Shown, Looking Ahead Station.
Bearing Diaphragm @ Pier #4 for Inside Box Similiar, Opposite Hand.

✱ Relative to Box Geometry

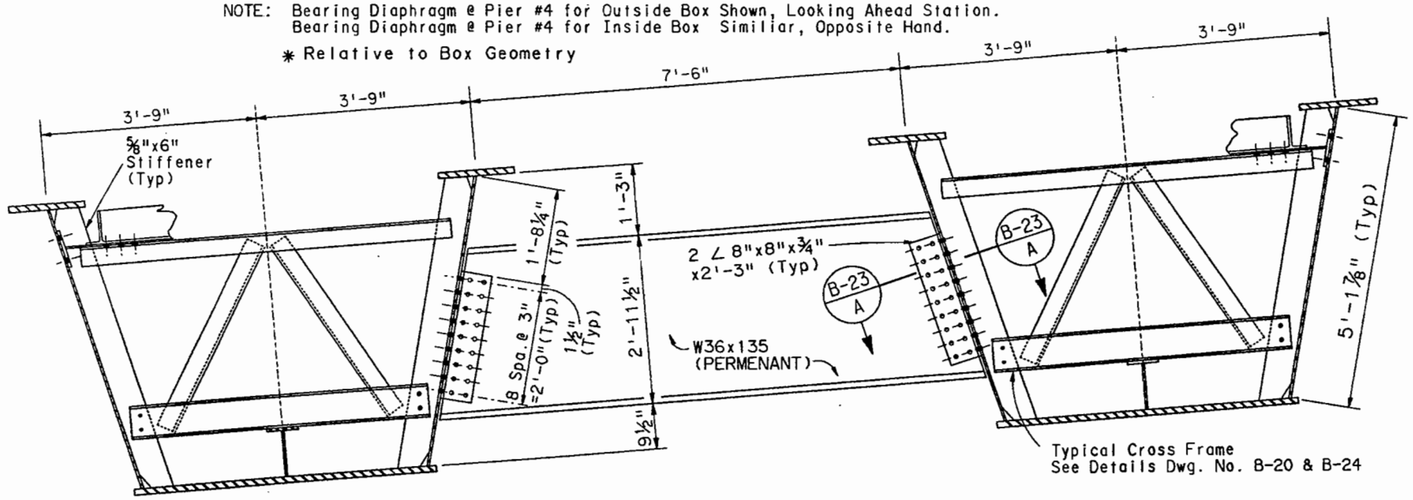

CENTER DIAPHRAGM AT STA. 987+95.20, 5.00' LEFT AT PIER #4, (RADIAL)

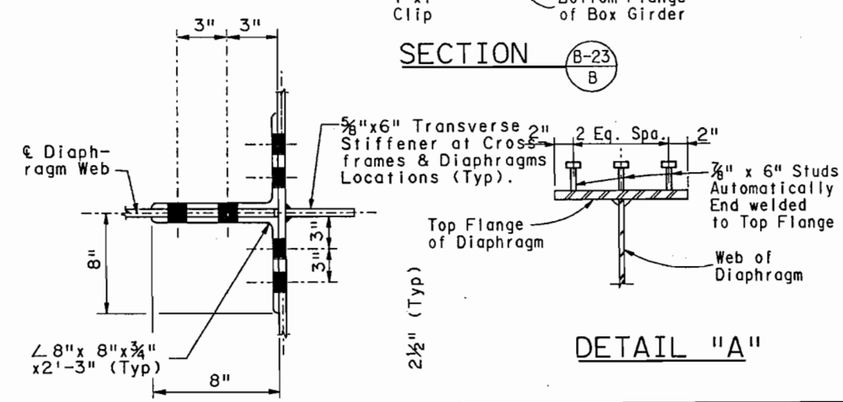

SECTION B-23 A

DETAIL "A"

INITIAL	DATE	Checked By	AEG	3-90
AEG	2-90		JHP	3-90
JHP	3-90	Quantities By	JHP	3-90
GMC	2-90	Checked By	AEG	3-90

Designed By	Checked By	Detailed By

E-470
Engineer 470 Partnership

DIVISION OF HIGHWAYS
I-25 / 470 INTERCHANGE
RAMP E FLYOVER
INTERIOR DIAPHRAGM
DETAILS PIER #4

Designer A. GRIFFITH	Structure Numbers	F - 17 - JW	
Detailer G.Christnacht			
Drawing Number B-23 of 45 Drawings			

INTERIOR DIAPHRAGMS PIER 4

SFDIA0513.90R

$$$$DGNSPEC$$$$$$$$$$$$$$$$
USERNAME
S241SGAE$$$$$$$$$$$$$$$$

AS CONSTRUCTED					
NO REVISIONS		REVISED		VOID	

FEDERAL ROAD REGION NO.	DIVISION	PROJECT NUMBER	SHEET NUMBER
VIII	COLORADO	1A06/1802	134

REVISIONS		
- -		
- -		
- -		

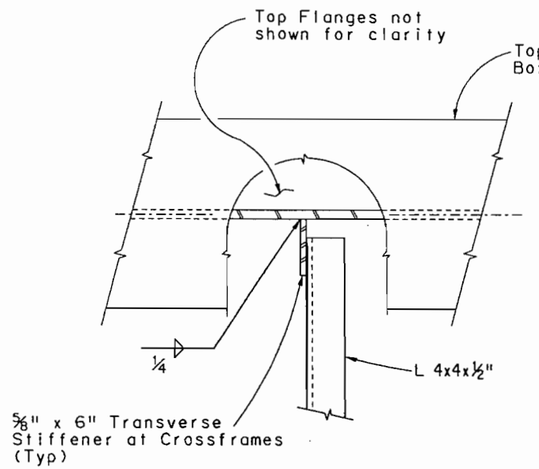

DETAIL B-15 A

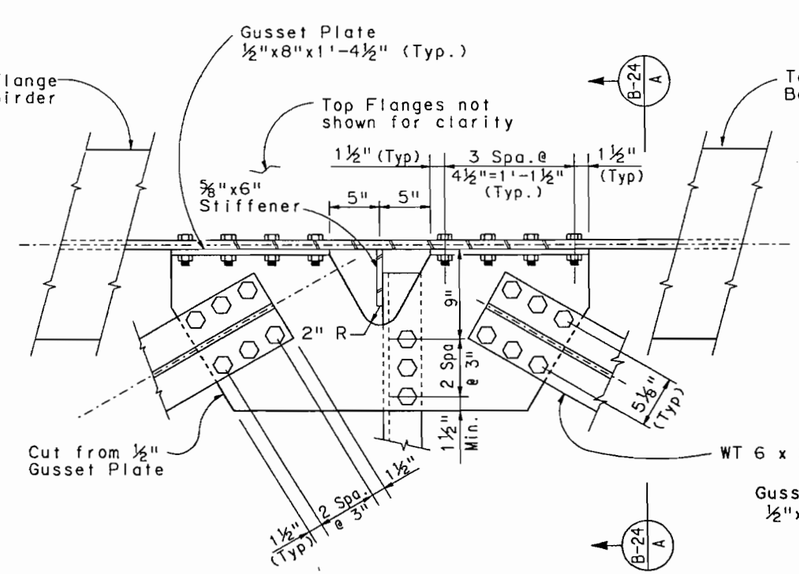

DETAIL B-15 B

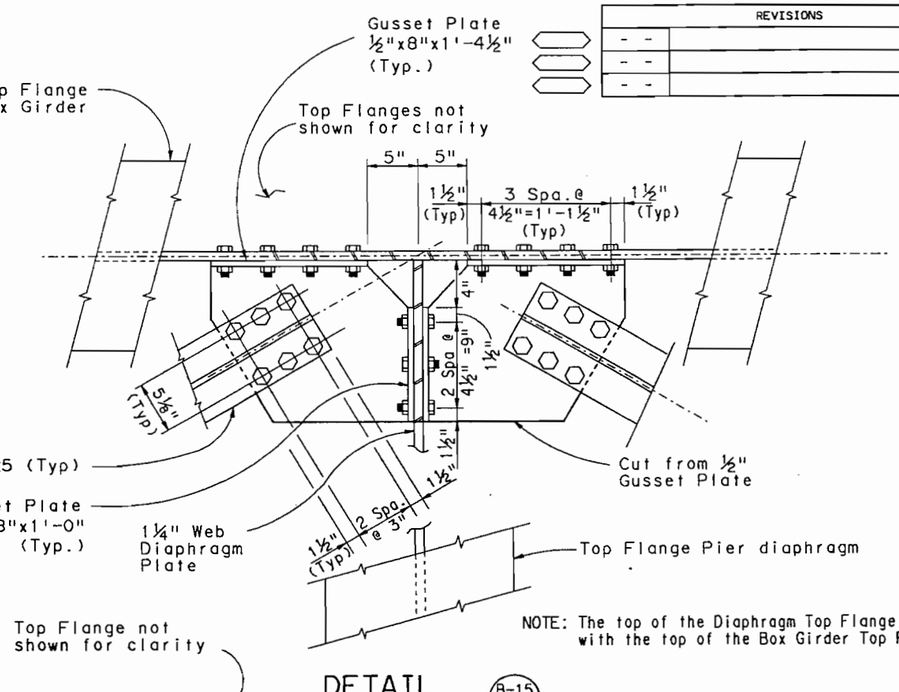

NOTE: The top of the Diaphragm Top Flange is flush with the top of the Box Girder Top Flange.

DETAIL B-15 C

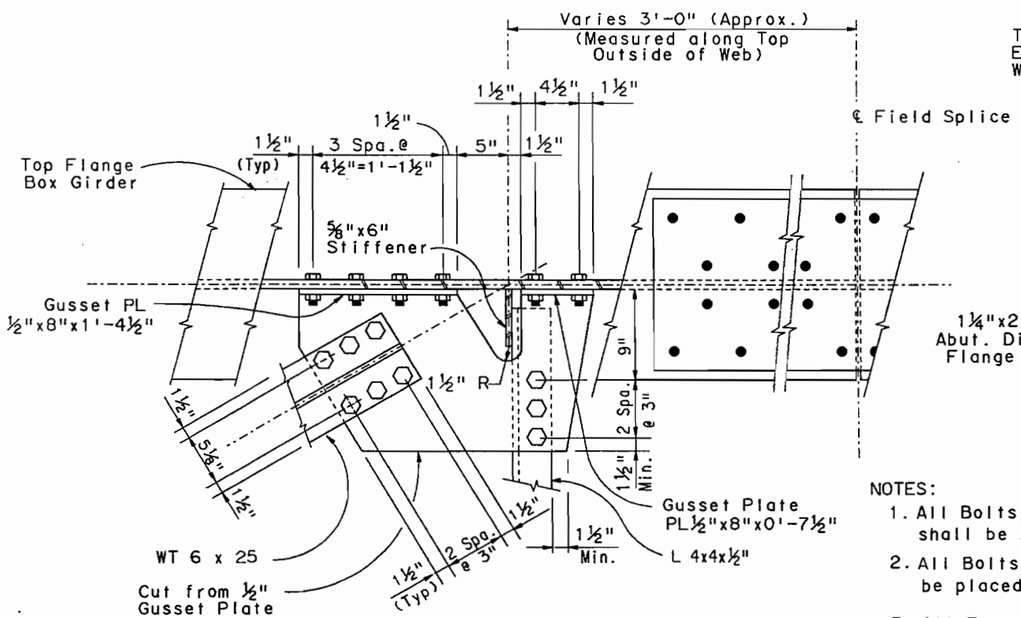

DETAIL B-15 D

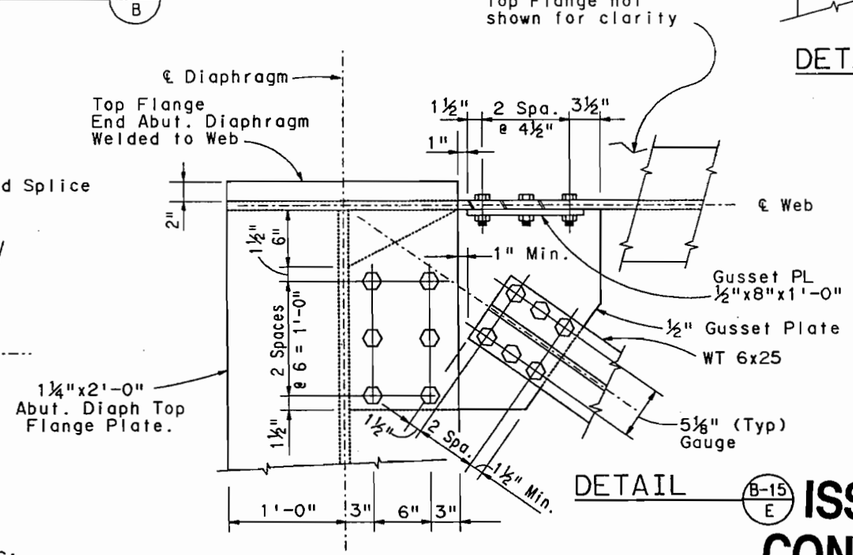

DETAIL B-15 E

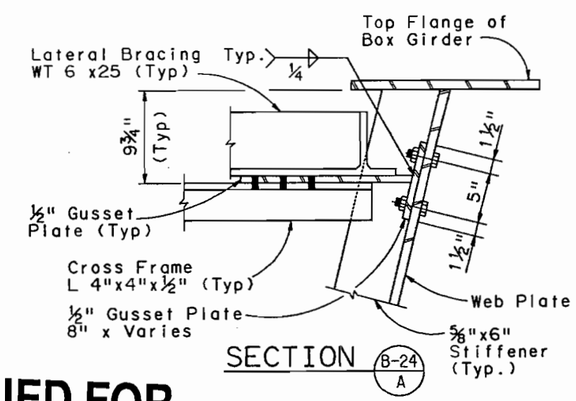

SECTION B-24 A

NOTES:

1. All Bolts for Diaphragms, Crossframes & Lateral Bracing shall be ⅞" diameter A-325 H.S. Bolts.
2. All Bolts attaching Gusset Plates to Box Girder Web shall be placed in pairs 5" apart, similiar to as shown in SECTION B-24 A
3. All Transverse Web Stiffeners at Diaphragms, Crossframes & Lateral Bracing shall be ⅝" x6". At the Abutments and Piers a solid diaphragm plate shall be used.
4. The top of All ½" Gusset Plates for Lateral Bracing and Crossframes shall be A-36 Steel and Located 9¼" below bottom of the Box Girder Top Flange .

ISSUED FOR CONSTRUCTION

7-9-90

INITIAL	DATE	Checked By	AEG	2-90
AEG	1-90	JHP	2-90	
JHP	1-90	Quantities By	JHP	2-90
GMC	1-90	Checked By	AEG	2-90
Designed By				
Checked By				
Detailed By				

$$$$$DGNSPEC$$$$$$$$$$$$$$$$
USERNAME
$$$$$SYTIME$$$$$$

E-470

Engineer 470 Partnership

DIVISION OF HIGHWAYS

I-25/470 INTERCHANGE
RAMP E FLYOVER
LATERAL BRACING DETAILS

Designer A. Griffith	Structure Numbers	F - 17 - JW	
Detailer A. Griffith			
Drawing Number B-24	of 45	Drawings	

LATERAL BRACING DETAILS

SEDIA0413.90R

AS CONSTRUCTED					
NO REVISIONS		REVISED		VOID	

FEDERAL ROAD REGION NO.	DIVISION	PROJECT NUMBER	SHEET NUMBER
VIII	COLORADO	1A06/1802	135

REVISIONS		
- -		
- -		
- -		

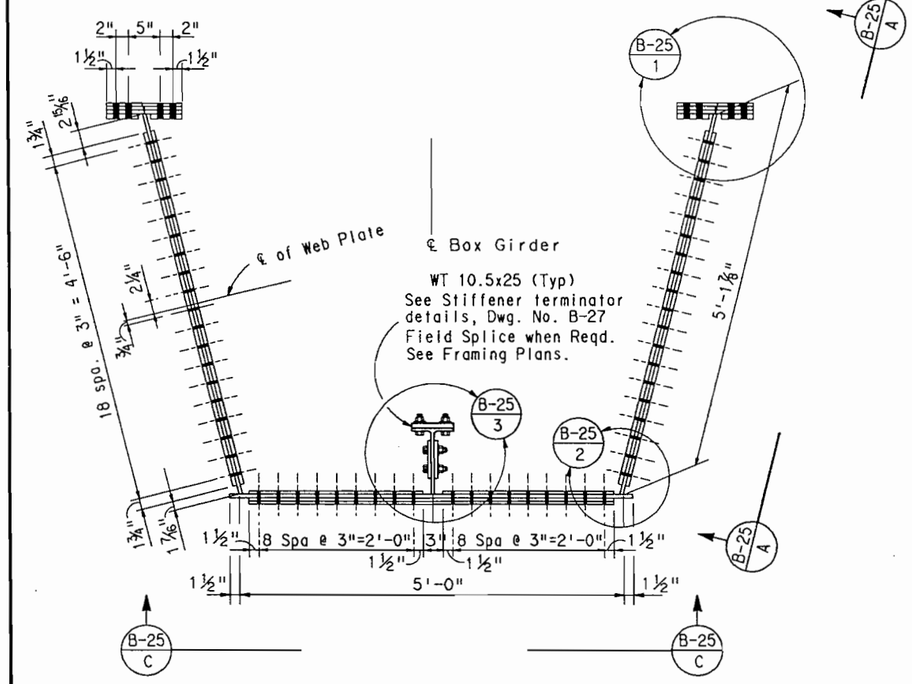

FIELD SPLICE TYPICAL SECTION

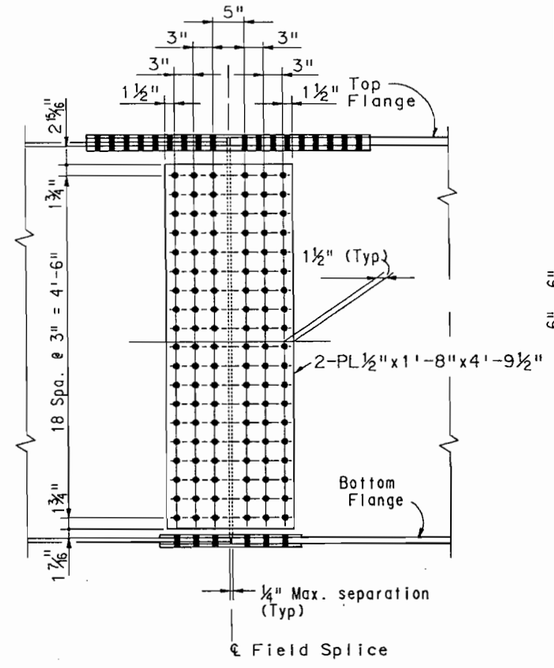

SECTION B-25 A

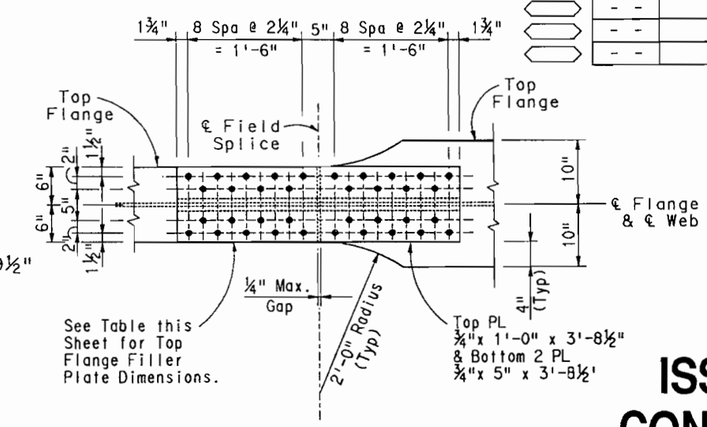

PARTIAL PLAN TOP FLANGE

ISSUED FOR CONSTRUCTION

7-9-90

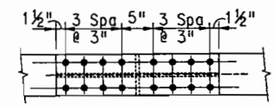

PARTIAL PLAN STIFFENER

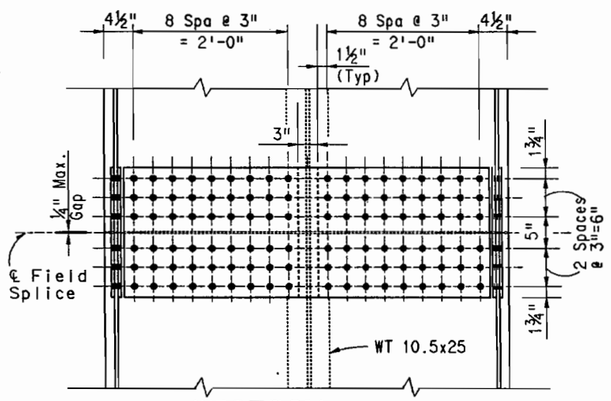

SECTION B-25 C

Looking up from outside Box Girder

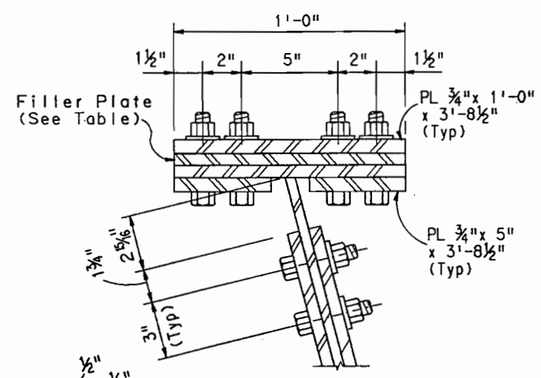

DETAIL B-25 1

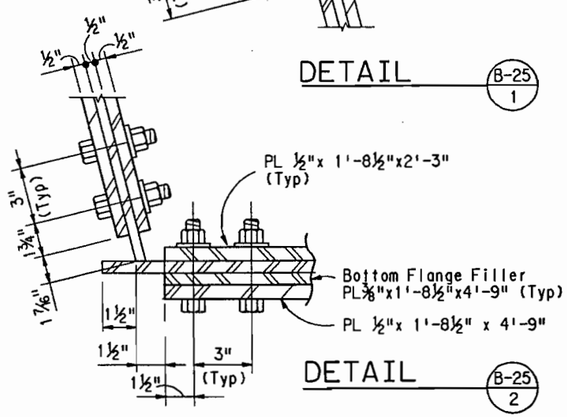

DETAIL B-25 2

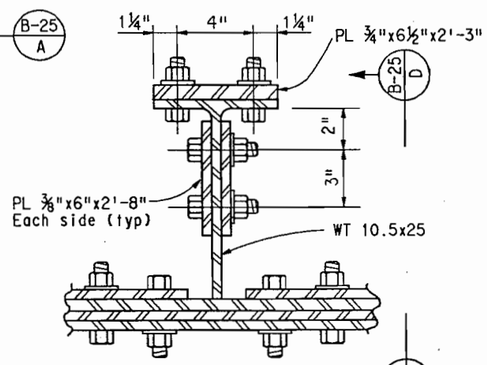

DETAIL B-25 3

Top Flange Filler Plate Table

Field Splice Number	Quantity per Location	Filler Plate Dimensions
F.S. #1	4	PL ⅝"x 1'-0" x 1'-10⅛"
F.S. #2	4	PL ⅝"x 1'-0" x 1'-10⅛"
F.S. #3	4	PL 1⅛"x 1'-0"x 1'-10⅛"
F.S. #4	4	PL 1⅛"x 1'-0"x 1'-10⅛"
F.S. #5	2	PL 1⅛"x 1'-0"x 1'-10⅛"
F.S. #6	2	PL 1⅛"x 1'-0"x 1'-10⅛"
F.S. #7	2	PL 1⅛"x 1'-0"x 1'-10⅛"
F.S. #8	2	PL 1⅛"x 1'-0"x 1'-10⅛"
F.S. #9	4	PL 1⅜"x 1'-0"x 1'-10⅛"
F.S. #10	4	PL 1⅜"x 1'-0"x 1'-10⅛"

Note:
Field Splice Number in table corresponds to "℄ F.S." shown on Framing plan Dwg. No. B-15 thru B-17. All filler plates shall be cut from single thickness as indicated in the table. Multiple layer fillers to reach required thickness shall not be permitted.

INITIAL	DATE		
AEG	1-90	AEG	2-90
DBW	1-90	JHP	2-90
AEG	1-90	JHP	2-90
		AEG	2-90

Designed By
Checked By
Detailed By
Quantities By
Checked By

E-470
Engineer 470 Partnership

DIVISION OF HIGHWAYS
I-25/470 INTERCHANGE
RAMP E FLYOVER
FIELD SPLICE DETAILS
MISCELLANEOUS STEEL DETAILS

Designer A. Griffith		Structure Numbers	F - 17 - JW
Detailer A. Griffith			
Drawing Number	B-25	of	B-45 Drawings

FIELD SPLICE DETAILS

SEFSMALT3.90B

$$$$$DGNSPEC$$$$$$$$$$$$$$$$$$
USERNAME
S:\24\FSQSA\DE\1724\1611SEFSM0113.90S

AS CONSTRUCTED					
NO REVISIONS		REVISED		VOID	

FEDERAL ROAD REGION NO.	DIVISION	PROJECT NUMBER	SHEET NUMBER
VIII	COLORADO	1A06	136

REVISIONS			
A-1	4-02-90	Dimensions & Details	AEG
	- -		
	- -		

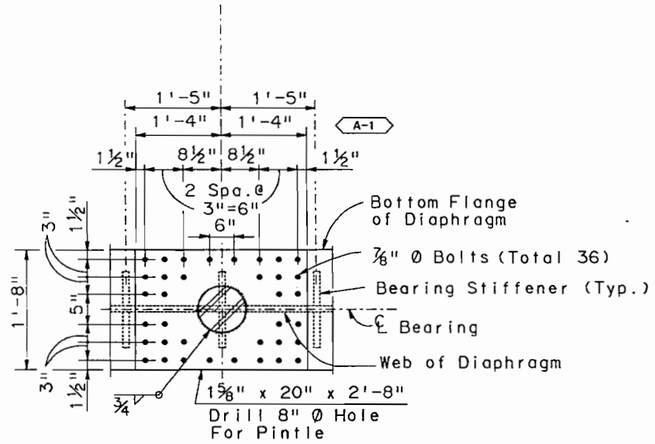

SECTION B-26 / D

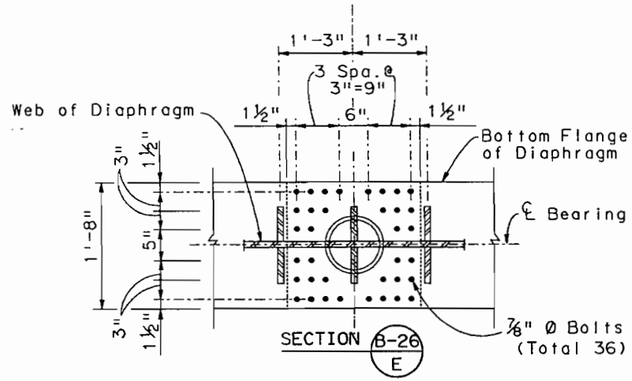

SECTION B-26 / E

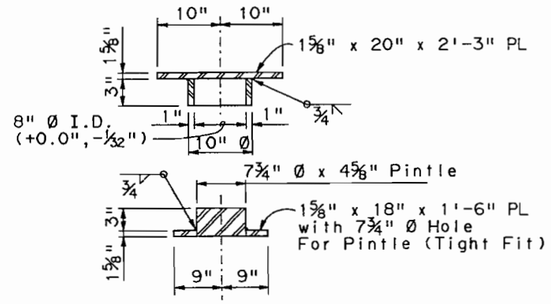

SECTION B-26 / F

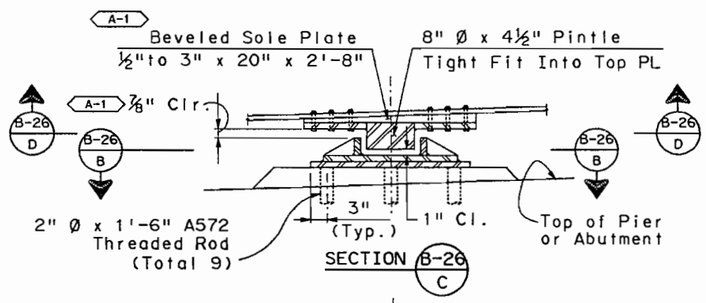

SECTION B-26 / C

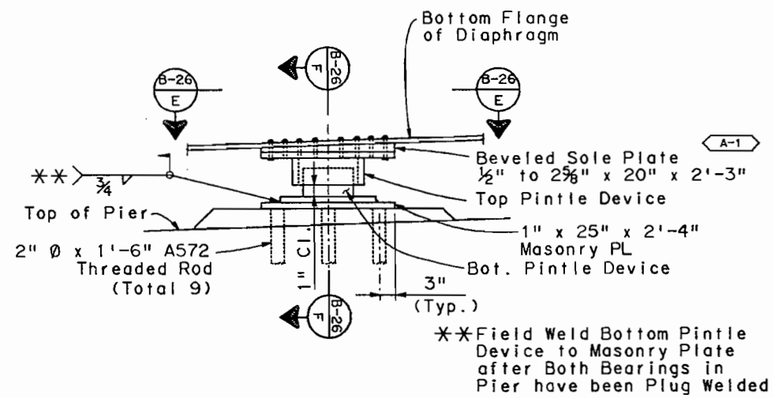

PINTLE DETAILS ℄ FIXED

(Piers #3 & #5)

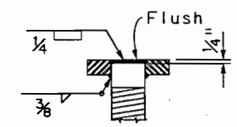

SECTION B-26 / G

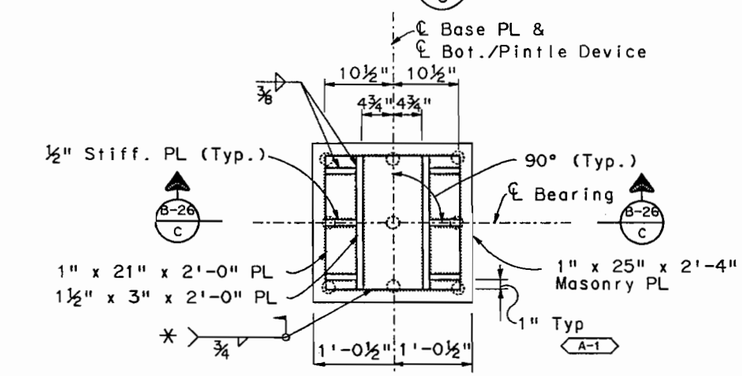

*Field Weld Bottom Pintle Device to Masonry Plate to Provide ¾" Clearance Between Pintle and Restrainer Plates.

SECTION B-26 / B

PINTLE DETAILS ℄ EXPANSION

(Abutments #1 & #6, Pier #2)

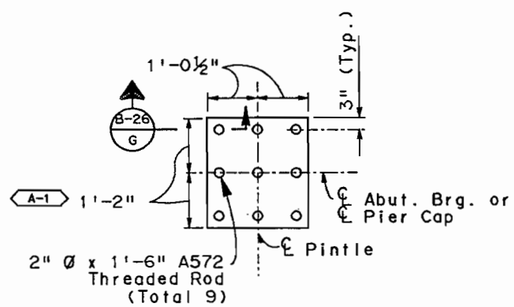

PLAN OF MASONARY PLATE

ISSUED FOR CONSTRUCTION

7-9-90

INITIAL	DATE	Checked By	AEG	2-90
AEG	1-90	Quantities By	JHP	3-90
GMC	1-90	Checked By	JHP	2-90
Designed By	Checked By	Detailed By		AEG 2-90

$$$$$DGNSPEC$$$$$$$$$$$$$$$$
USERNAME
$$$$$$STIME$$$$$$

E-470

Engineer 470 Partnership

DIVISION OF HIGHWAYS

I-25/470 INTERCHANGE
RAMP E FLYOVER
PINTLE DETAILS

Designer A. Griffith		Structure Numbers	F - 17 - JW
Detailer G.Christnacht			
Drawing Number	B-26 of 45 Drawings		

PINTLE DETAILS

SFSSM0213.90S

AS CONSTRUCTED					
NO REVISIONS		REVISED		VOID	

FEDERAL ROAD REGION NO.	DIVISION	PROJECT NUMBER	SHEET NUMBER
VIII	COLORADO	1A06/1802	137

REVISIONS		
- -		
- -		
- -		

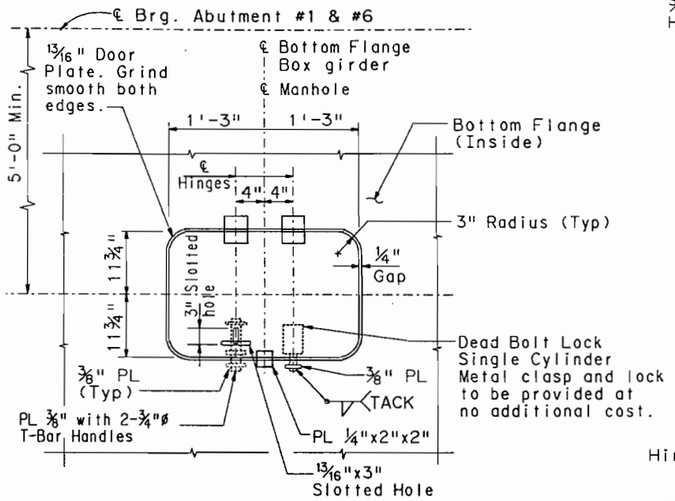

PLAN OF ACCESS MANHOLE IN BOTTOM FLANGE

Note:

1. For location of access Manholes, see framing Plans. Dwg. No. B-15 thru B-17. (4 total Required).
2. Steel for Manhole shall be ASTM A-36.

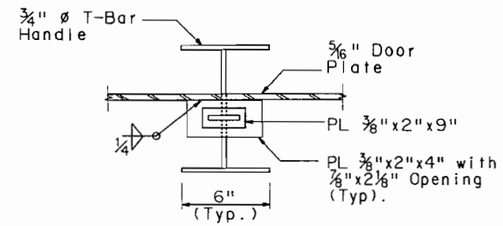

SECTION B-27 A

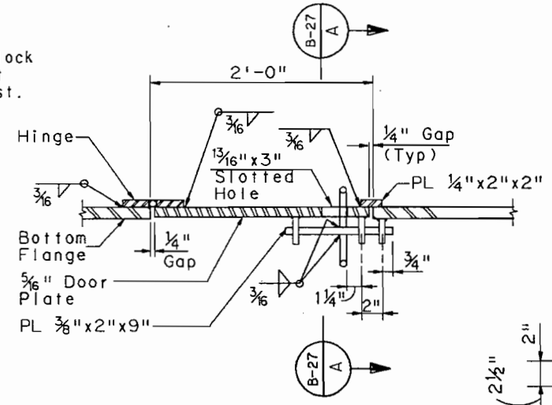

HINGE AND BOLT DETAIL

Note: To open manhole, lift up. (Hinge on inside).

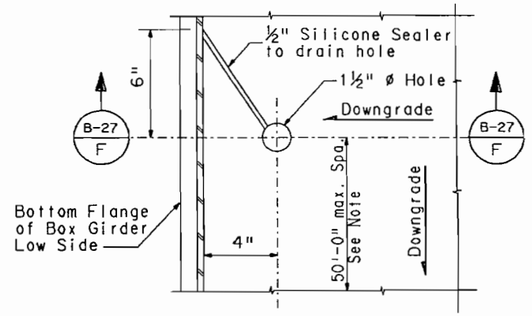

GIRDER DRAIN HOLE DETAILS

Note:

1. In Addition, provide drain holes at low points of box girder.
2. Place Silicone Sealer in field, prior to deck pour.

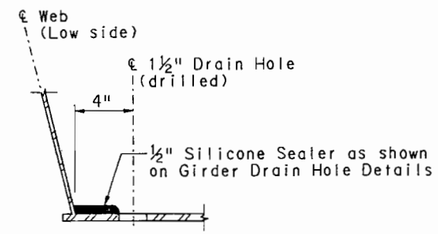

SECTION B-27 F

Note:

1. Clean steel before applying Silicone Sealer Compound. Compound subject to approval of engineer.
2. Silicone Sealer will not be paid for separately but shall be included in the cost of the work.

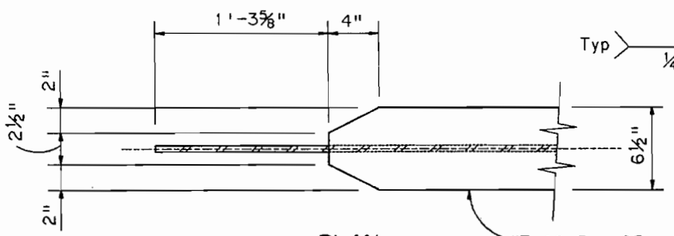

PLAN

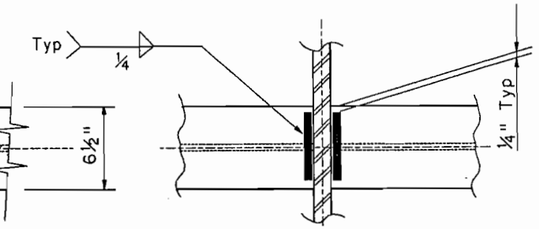

PLAN

Terminate Stiffener each side of Interior Diaphragm at Piers.

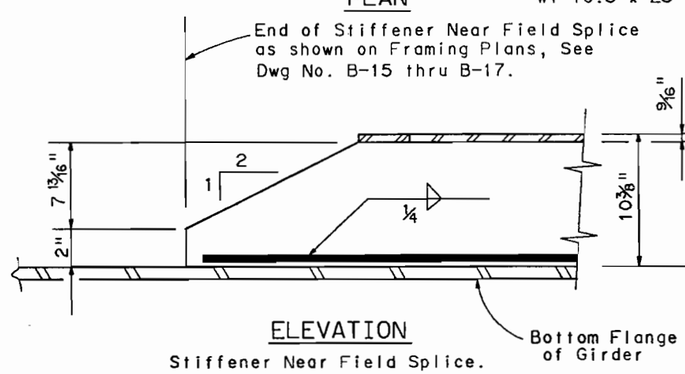

ELEVATION

Stiffener Near Field Splice.

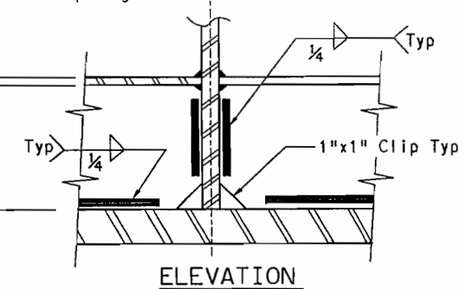

ELEVATION

Stiffener at Int. Diaphragm at Piers.

END OF BOTTOM FLANGE LONGITUDINAL STIFFENER DETAILS

Note: 1. Terminate weld ¼" from end. Do not return weld around end of stiffener.

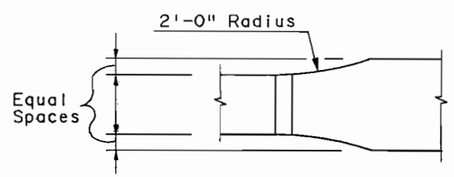

PLAN - WIDTH TRANSITION

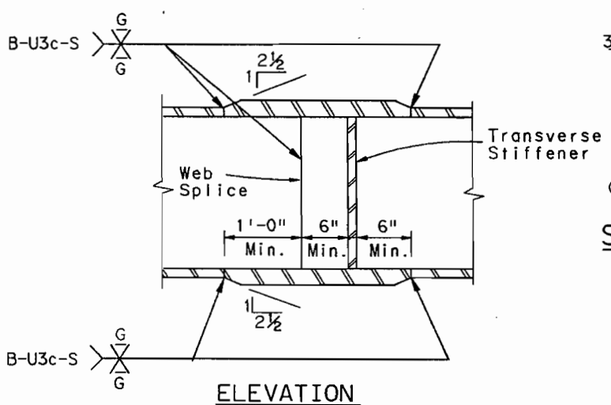

ELEVATION

SHOP SPLICE DETAIL

Note:

1. Grind flush all flange butt joints.
2. All groove welds in butt joints shall be ultrasonically tested as per Section 6.7 of ANSI/AASHTO/AWS D1.5-88.

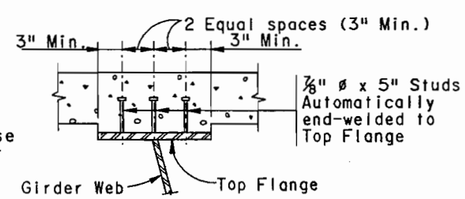

SHEAR CONNECTOR DETAILS

Note:

1. Steel for Shear connectors shall be AASHTO M-169 (ASTM A-108)
2. Each Row of Shear connectors consists of 3-⅞" ø studs each Top Flange.

ISSUED FOR CONSTRUCTION

7-9-90

	INITIAL	DATE			
Designed By	AEG	1-90	Checked By	AEG	2-90
Checked By	JHP	1-90	Quantities By	JHP	2-90
Detailed By	AEG	1-90	Checked By	AEG	2-90

$$$$DGNSPEC$$$$$$$$$$$$$$$$
USERNAME
ST241FSQSAEG$$$$/M61JSESSM0113.90S

E-470

Engineer 470 Partnership

DIVISION OF HIGHWAYS

I-25 / 470 INTERCHANGE
RAMP E FLYOVER
ACCESS MANHOLE AND
MISCELLANEOUS STEEL DETAILS

Designer A. GRIFFITH		Structure Numbers	F - 17 - JW
Detailer A. GRIFFITH			
Drawing Number	B-27	of	45 Drawings

MISCELLANEOUS DETAILS

SESSM0113.90S

AS CONSTRUCTED					
NO REVISIONS		REVISED		VOID	

FEDERAL ROAD REGION NO.	DIVISION	PROJECT NUMBER	SHEET NUMBER
VIII	COLORADO	1A06/1B02	138

REVISIONS		
- -		
- -		
- -		

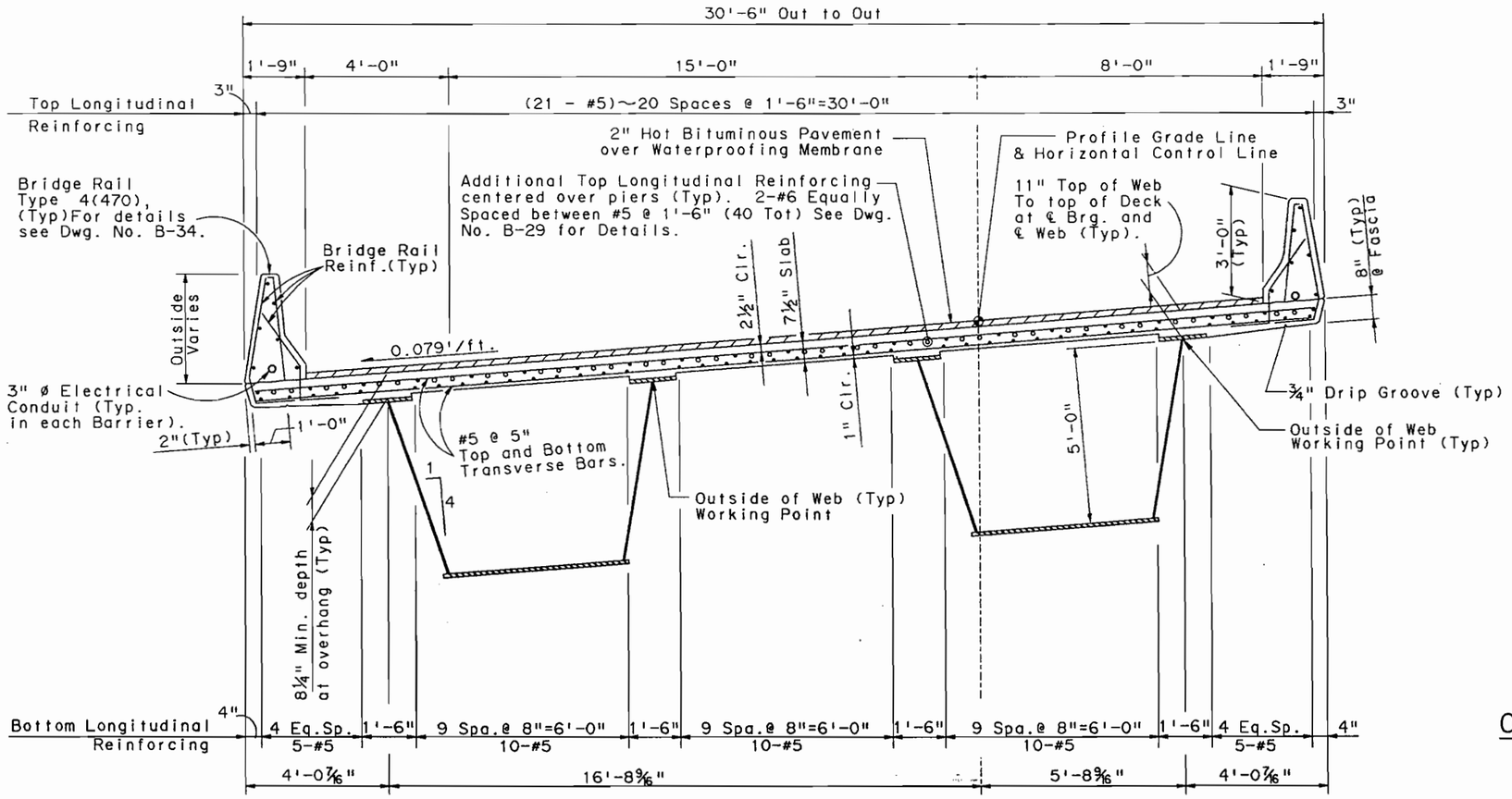

TYPICAL SECTION

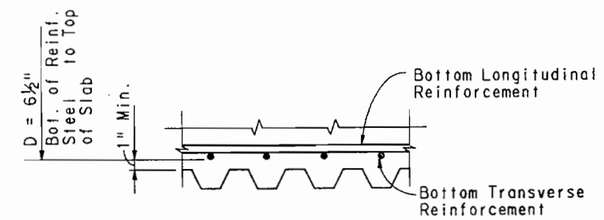

PERMANENT DECK FORM DETAIL

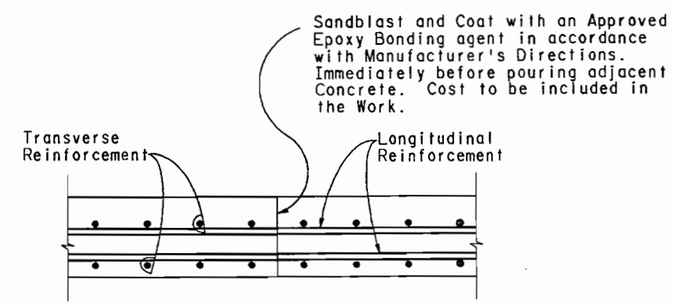

OPTIONAL CONSTRUCTION JOINT DETAIL

Notes:

1. Deck concrete shall be Concrete, Class D (Bridge).
2. Permanent Deck forms are not permitted in the cantilever portions of the Deck Slab.
3. All Cost of additional Material & Labor required to use permanent Deck Forms shall be included in the Work.
4. Section is taken along a Radial Line. Transverse Reinforcing (shown here) is spaced Radially and measured along centerline of bridge, (5.00' Lt. of H.C.L.).
5. #5 Top & Bottom Longitudinal reinforcing shall be continuous over piers; (No rebar splices permitted within 17'-6" each side of Pier centerline).
6. See Additional Reinforcing Details and Notes See Dwg. No. B-29 and B-30.
7. For Bridge Rail Reinforcing extended into deck, See Dwg No. B-34
8. For Reinforcing at Bridge Drain locations, see Details, Dwg. No. B-37 & B-38.

ISSUED FOR CONSTRUCTION

7-9-90

	INITIAL	DATE		
Designed By	AEG	1-90	Checked By	AEG 2-90
Checked By	JHP	1-90	Quantities By	JHP 2-90
Detailed By	AEG	1-90	Checked By	AEG 2-90

E-470

Engineer 470 Partnership

DIVISION OF HIGHWAYS

I-25/470 INTERCHANGE
RAMP E FLYOVER
DECK REINFORCEMENT DETAILS

Designer A. Griffith	Structure Numbers	F - 17 - JW	
Detailer A. Griffith			
Drawing Number B-28 of 45 Drawings			

DECK REINFORCEMENT DETAILS

SETYS0113.90B

$$$$DGNSPEC$$$$$$$$$$$$$$$$$$
USERNAME
S:\241\SYS\AE\97471961\SETYS0113.90B

AS CONSTRUCTED				
NO REVISIONS		REVISED		VOID

FEDERAL ROAD REGION NO.	DIVISION	PROJECT NUMBER	SHEET NUMBER
VIII	COLORADO	1A06/1802	139

REVISIONS		
- -		
- -		
- -		

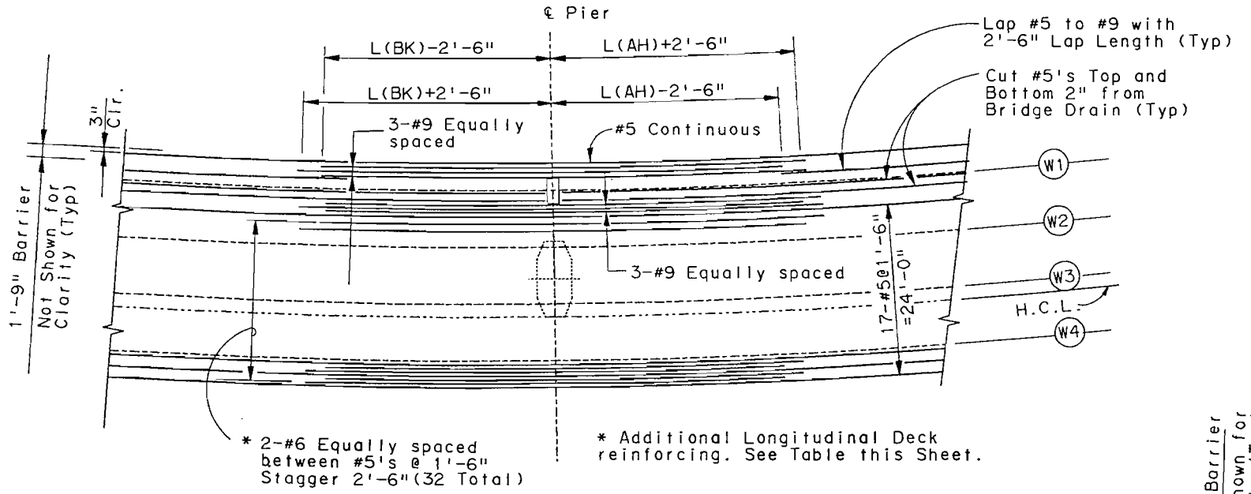

DECK PLAN PIER #3 & #5

Top Reinforcement Shown

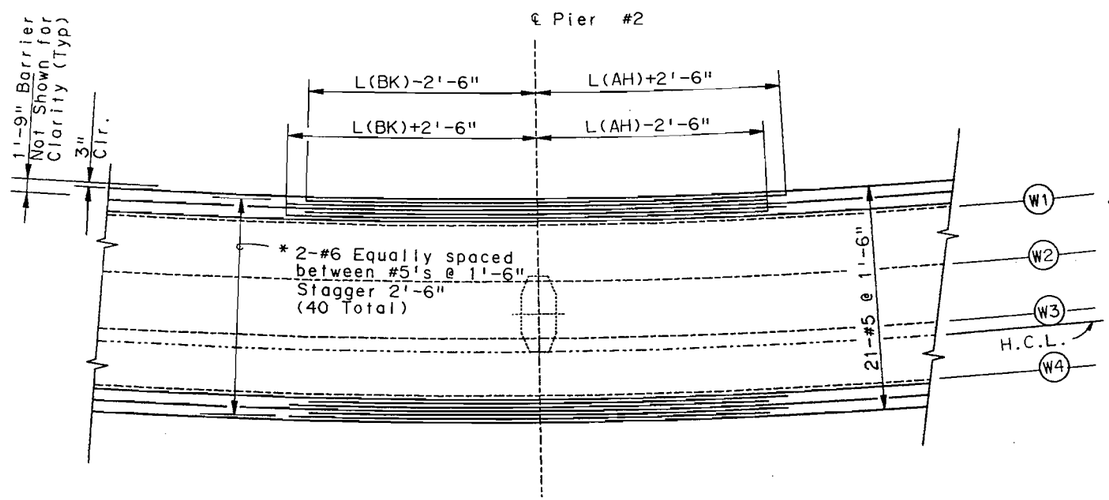

* Additional Longitudinal Deck reinforcing. See Table this Sheet.

DECK PLAN PIER #2

Top Reinforcement Shown

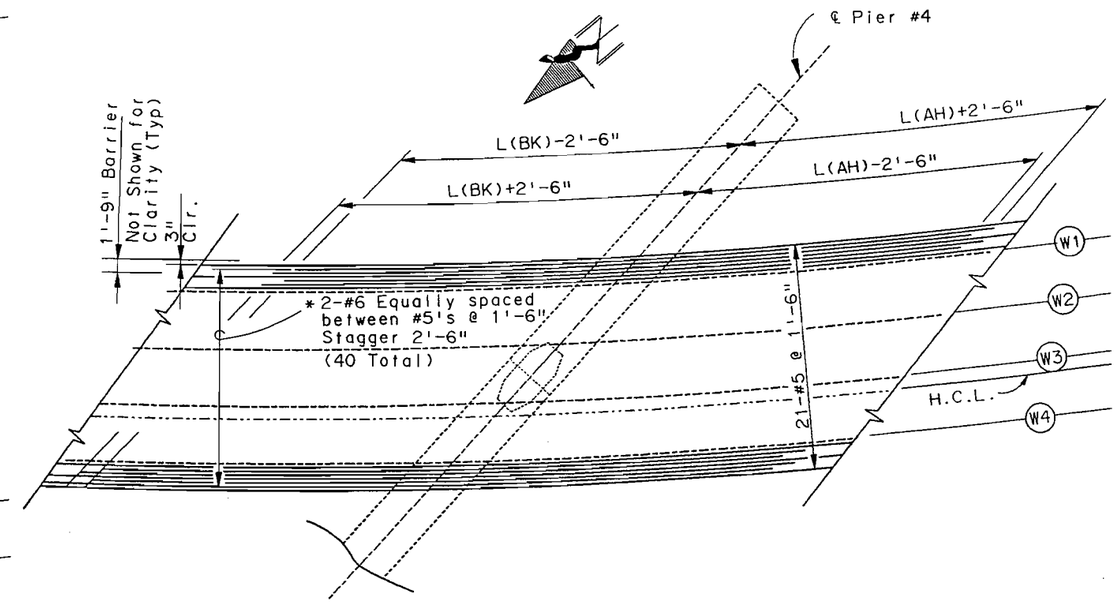

DECK PLAN PIER #4

Top Reinforcement Shown

* Additional Longitudinal Deck reinforcing. See Table this Sheet.

ISSUED FOR CONSTRUCTION

7-9-90

ADDITIONAL LONGITUDINAL DECK REINFORCEMENT AT PIERS				
PIER	NUMBER	SIZE	L(BK)	L(AH)
Pier #2	40	#6	30'-0"	30'-0"
Pier #3	32	#6	36'-0"	34'-0"
	6	#9	36'-0"	34'-0"
Pier #4	40	#6	40'-0"	40'-0"
Pier #5	32	#6	34'-0"	37'-0"
	6	#9	34'-0"	37'-0"

NOTES:

1. All Transverse Reinforcing shall be placed perpendicular (Radially) to the centerline of bridge (5'-0" left of H.C.L.).The spacing shown on Dwg. No. B-28 for the #5 @ 5" Top & Bot. are along centerline of bridge.
2. Additional reinforcing over piers (#6's and #9's top longitudinal bars) & #5 Top & Bot. longitudinal reinforcing shall be continuous over piers (No rebar splices permitted 17'-6" each side of pier centerlines). Number and location of other Splices not shown on plans, shall be approved by the Engineer.
3. Lap Splices shall be staggered 2'-6" Minimum.
4. 24 hours minimum required between concrete deck pours.
5. For Bridge rail Reinforcing extended into deck, See Dwg. No. B-34.
6. Work this drawing with Bridge Drain Reinforcing Details, See Dwg. No. B-37 and B-38.

E-470

Engineer 470 Partnership

DIVISION OF HIGHWAYS

I-25 / 470 INTERCHANGE
RAMP E FLYOVER
DECK REINFORCEMENT DETAILS

Designer A. GRIFFITH		Structure Numbers	F - 17 - JW
Detailer A. GRIFFITH			
Drawing Number B-29 of 45 Drawings			

	INITIAL	DATE	
Designed By	AEG	1-90	Checked By AEG 2-90
Checked By	DBW	1-90	Quantities By DBW 2-90
Detailed By	AEG	1-90	Checked By JHP 2-90
			DBW 2-90

$$$$$DGNSPEC$$$$$$$$$$$$$$$$$
USERNAME$$$$$$$$$$$$$$$$$
$$$$$SYTIME$$$$$$$$$$$$$$$$$

SEDKS0113.90N

AS CONSTRUCTED					
NO REVISIONS		REVISED		VOID	

FEDERAL ROAD REGION NO.	DIVISION	PROJECT NUMBER	SHEET NUMBER
VIII	COLORADO	1A06	140

A-1	4-02-90	Dimensions @ Blockout & Notes	AEG

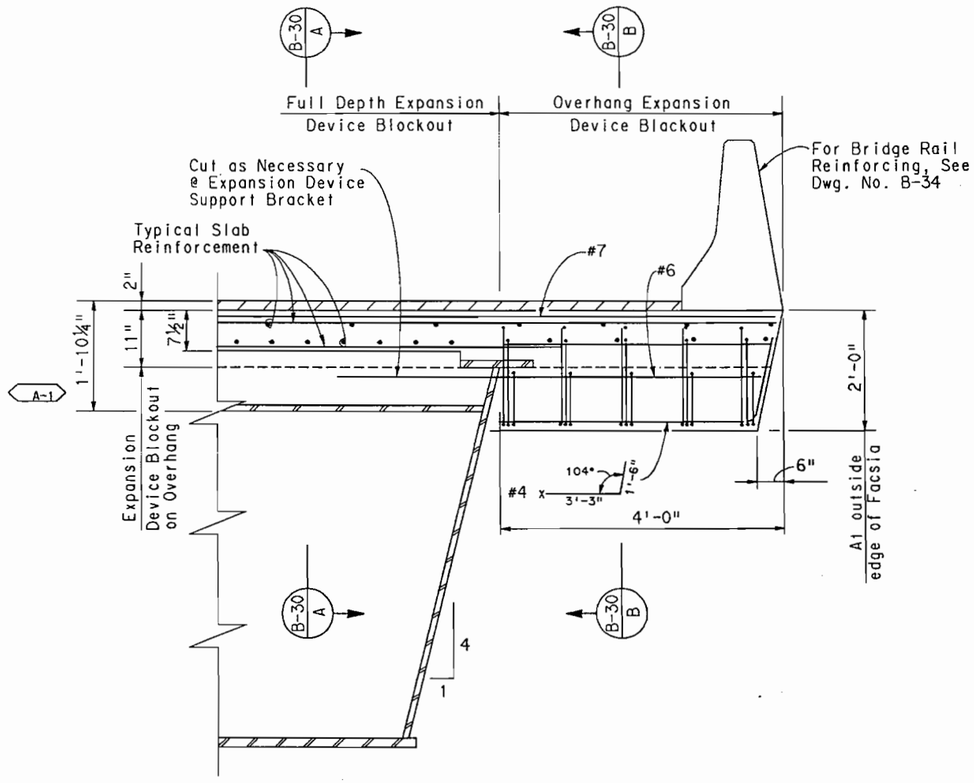

SECTION AT EXPANSION DEVICE

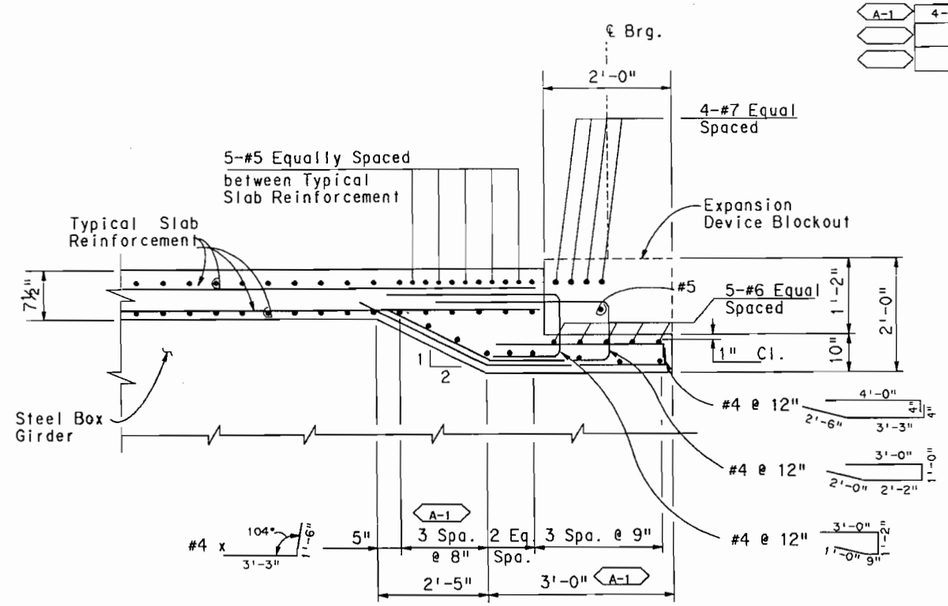

SECTION B-30 B

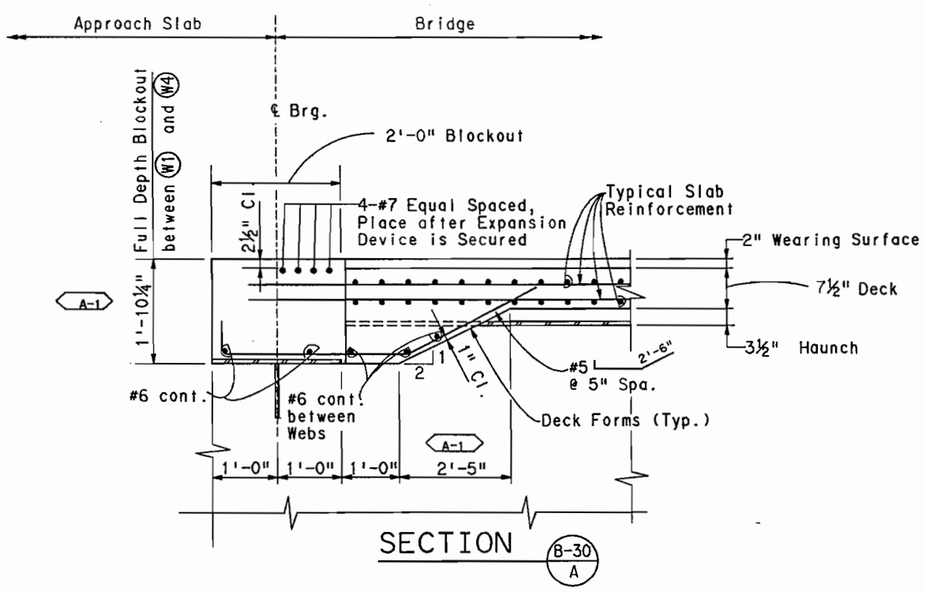

SECTION B-30 A

ISSUED FOR CONSTRUCTION

7-9-90

A-1 NOTES:

1. All dimensions transverse to bridge are measured along the cross slope of bridge.
2. Expansion Device Blockout/Closure shall be Concrete Class D (Bridge).
3. For Expansion Device Details, See Dwg. No. B-32 & B-33.

Designed By	AEG	1-90	Checked By	AEG	3-90
Checked By	DBW	1-90	Quantities By	JHP	3-90
Detailed By	AEG	1-90	Checked By	JHP	3-90

DIVISION OF HIGHWAYS

I-25 / 470 INTERCHANGE
RAMP E FLYOVER
DECK REINFORCEMENT DETAILS
AT EXPANSION DEVICE

E-470
Engineer 470 Partnership

Designer A. GRIFFITH	Structure Numbers	F - 17 - JW	
Detailer A. GRIFFITH			
Drawing Number B-30	of 45	Drawings	

DECK REINFORCEMENT AT EXP. DEVICE

SEDKS0213.90N

$$$$DGNSPEC$$$$$$$$$$$$$$$$
USERNAME
$$$$$SYTIME$$$$$$

AS CONSTRUCTED			
NO REVISIONS		REVISED	VOID

FEDERAL ROAD REGION NO.	DIVISION	PROJECT NUMBER	SHEET NUMBER
VIII	COLORADO	1A06	141

	REVISIONS		
A-1	4-02-90	Construction Sequence Note #1	AEG
	- -		
	- -		

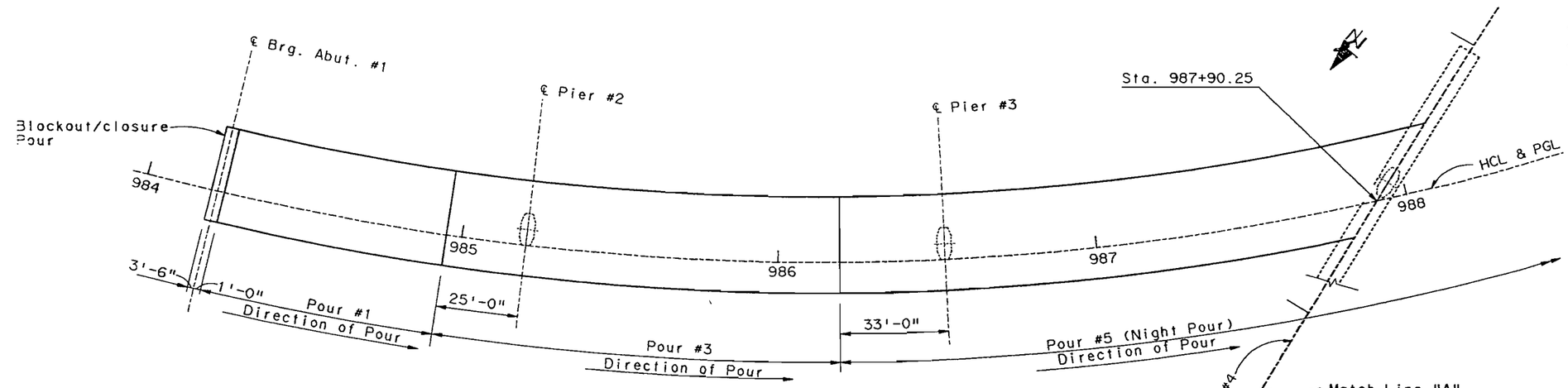

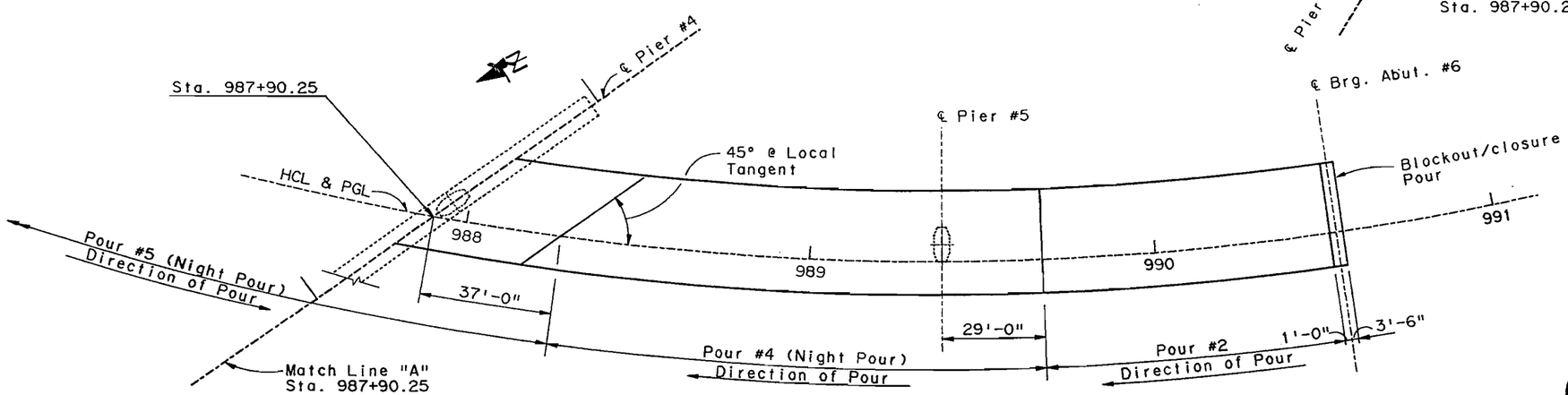

ISSUED FOR CONSTRUCTION

7-9-90

CONSTRUCTION SEQUENCE:

A-1 1. Pier #4 Column and cap shall be constructed in a manner to minimize the time required for temporary lane closures on I-25.

2. Erection of box girders and splicing of girders above I-25 and E-470 shall be limited to off-peak night hours, as per Special Provisions.

3. Deck slab to be poured according to slab pouring sequence shown in this drawing and the Special Provisions.

4. Temporary cross frames & costruction bracing shall not be removed before the entire concrete slab has obtained its 28-day strength.

5. Deck concrete shall not be placed until the entire superstructure has been erected, all field bolts torqued, and all bearing device plug welds are complete.

POURING SCHEDULE

NOTE:

Place Concrete in the Sequence Shown. Placements Over Existing Ramps and Over I-25 and E-470 Shall be at Night.

Dimensions shown are Measured along Horizontal Control Line

	INITIAL	DATE	checked By		
Designed By	AEG	1-90	Quantities By	AEG	2-90
Checked By	JHP	1-90	Checked By	JHP	2-90
Detailed By	AEG	1-90		AEG	2-90

DIVISION OF HIGHWAYS

I-25 / 470 INTERCHANGE
RAMP E FLYOVER
CONCRETE PLACEMENT SEQUENCE

E-470
Engineer 470 Partnership

Designer A. Griffith		Structure Numbers	F - 17- JW
Detailer A. Griffith			
Drawing Number	B-31	of	45 Drawings

CONCRETE PLACEMENT SEQUENCE

SECPS0113.90M

USERNAME:
SYSTIME:

AS CONSTRUCTED			
NO REVISIONS		REVISED	VOID

FEDERAL ROAD REGION NO.	DIVISION	PROJECT NUMBER	SHEET NUMBER
VIII	COLORADO	1A06/1802	142

REVISIONS		
- -		
- -		
- -		

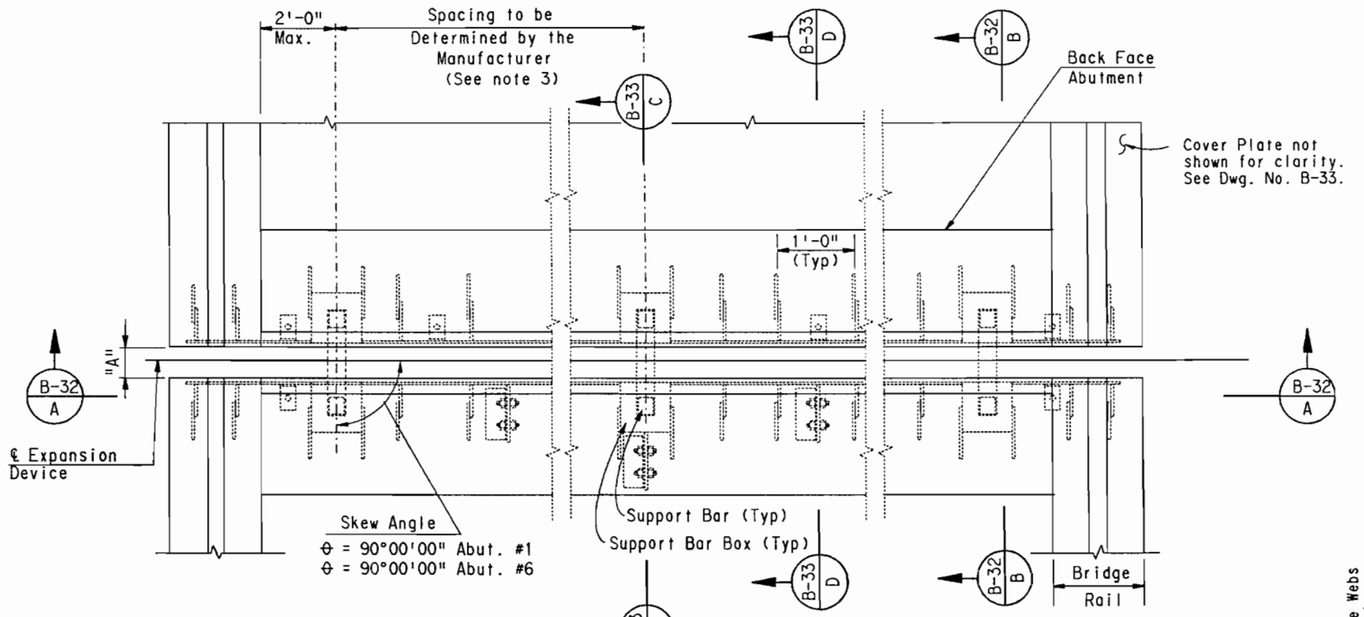

PLAN

Abutment 1 & Abutment 6

Sta. Ah. Sta. Ah.

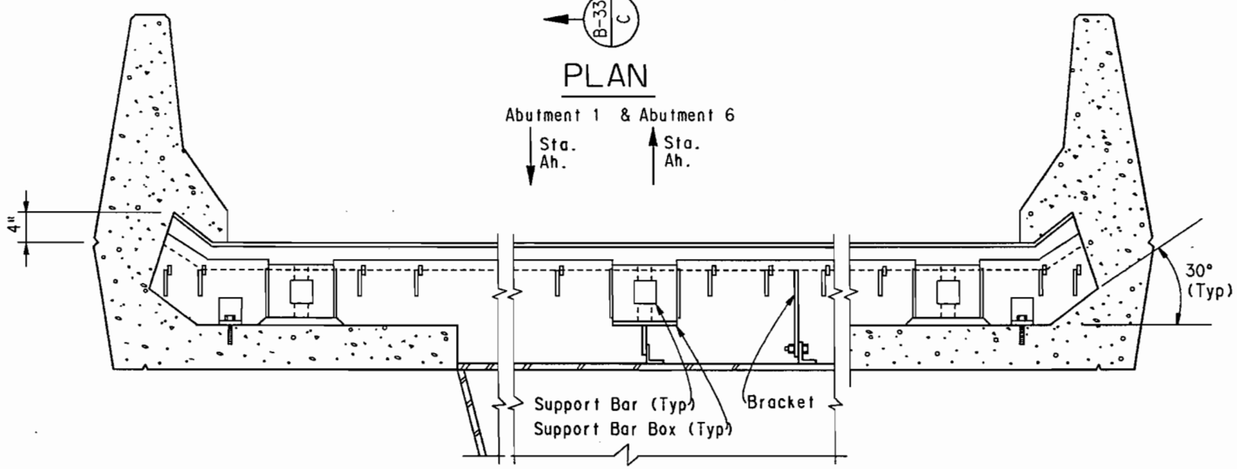

SECTION B-32 A

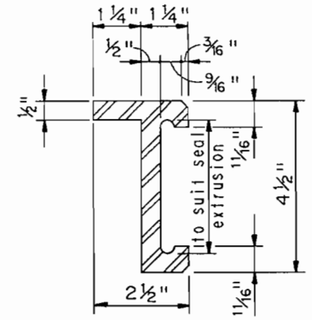

EDGE BEAM

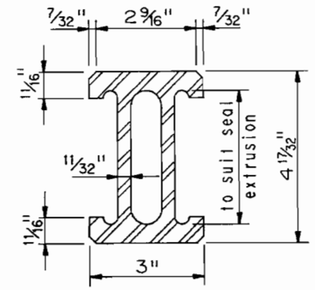

SEPARATION BEAM

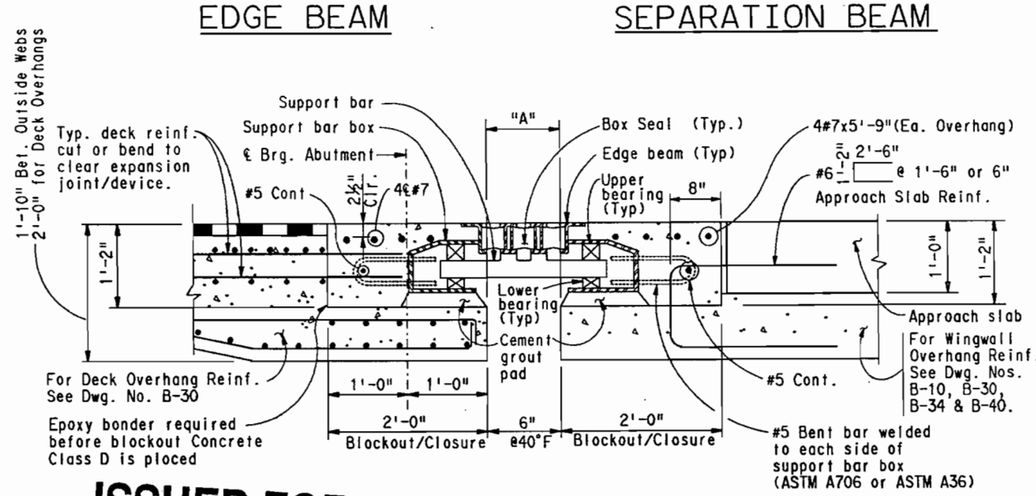

ISSUED FOR CONSTRUCTION
7-9-90

SECTION B-32 B
AT OVERHANG

NOTE:
Expansion Device (0-6 Inch) is shown.

NOTES:

1. Work this drawing with Dwg. No. B-33.
2. Acceptable expansion device alternates:
   At Abutment 1: Wabo-Maurer D-600 or Maurer D.S. Brown D-161.
   At Abutment 6: Wabo-Maurer D-600 or Maurer D.S. Brown D-161.
3. Avoid Diaphragm Top Flange Splice Plates near Web 2 and Web 3. See Dwg. No. B-21 for locations.
4. Location and size of support bars, anchor assembly, anchor angle, bracket for attachment to steel and stiffener plates shall be per manufacturer's drawings.
5. The neoprene box seals shall be supplied and installed in one continuous piece.
6. For Dimensian "A" see Dwg. No. B-33.
7. "A" dimensions are dependent upon the particular expansion device supplied and shall be shown on the shop drawings. The shop drawings shall indicate the "A" dimensions at a range of temperatures from 30°F to 100°F assuming a mid-point temperature of 40°F.
8. The expansion device shall be installed an grade, parallel to the slope and grade of the deck.
9. After the concrete has attained initial set, any temporary attachments used to hold the expansion device assembly in its proper position shall be removed.
10. Cover plates for Bridge Rail are not shown for clarity. Refer to Dwg. No. B-33.

	INITIAL	DATE	Checked By	AEG	2-90
Designed By	AEG	1-90	Quantities By	DBW	2-90
Checked By	MRM	1-90	Checked By	JHP	2-90
Detailed By	GMC	1-90		AEG	2-90

E-470
Engineer 470 Partnership

DIVISION OF HIGHWAYS
I-25 / 470 INTERCHANGE
RAMP E FLYOVER
BRIDGE EXPANSION DEVICE
(0-6 INCH)

Designer A. Griffith	Structure Numbers	F - 17 - JW	
Detailer G.Christnacht			
Drawing Number B-32	of 45	Drawings	

BRIDGE EXPANSION DEVICE (0-6 INCH)

SFEXP0213.90U

$$$$DGNSPEC$$$$$$$$$$$$$$$$$$
USERNAME
S:\E470\DESIGN\1A06\1802\SEEXP0213.90U

AS CONSTRUCTED				
NO REVISIONS		REVISED		VOID

FEDERAL ROAD REGION NO.	DIVISION	PROJECT NUMBER	SHEET NUMBER
VIII	COLORADO	1A06/1802	143

REVISIONS		

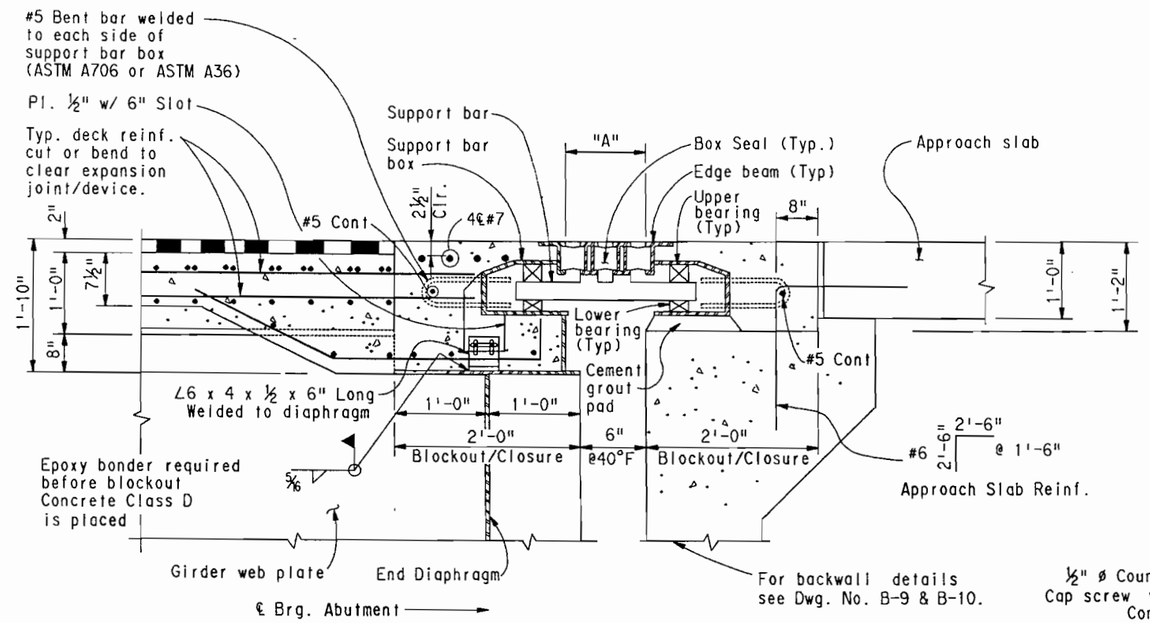

SECTION B-32 C
AT STEEL DIAPHRAGM

NOTE:
Exp. Dev. (0-6 Inch) is shown.

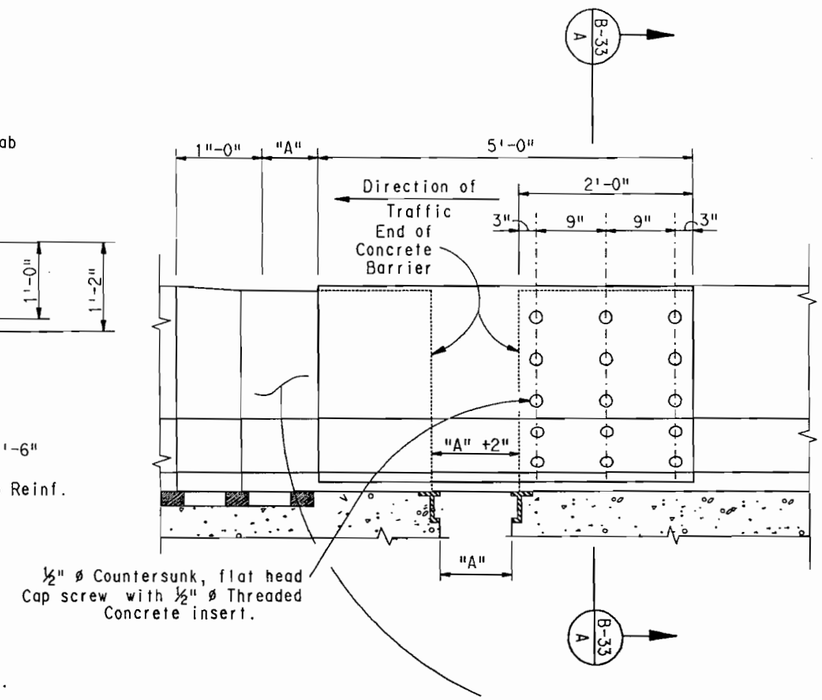

ELEVATION (RIGHT RAIL SHOWN)

Inside face of Bridge Rail Cover Plate Shown,
Outside lonngitudinal spacing similiar.
Right Rail Shown, Left Rail similiar, opposite hand.
Cover Plate at Abut.#1 Shown, Abut.#6 similiar.
Provide vent holes on top of Cover Plates.

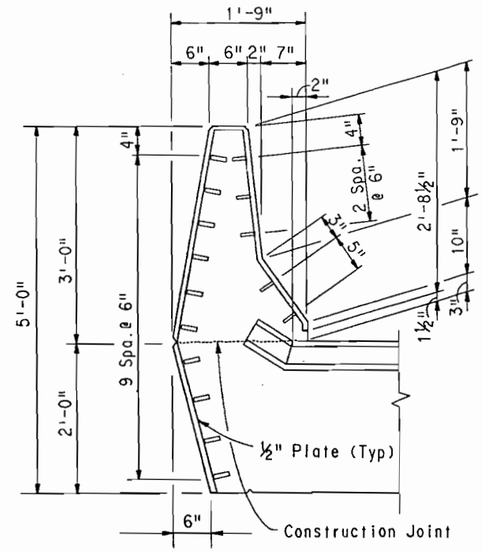

SECTION B-33 A

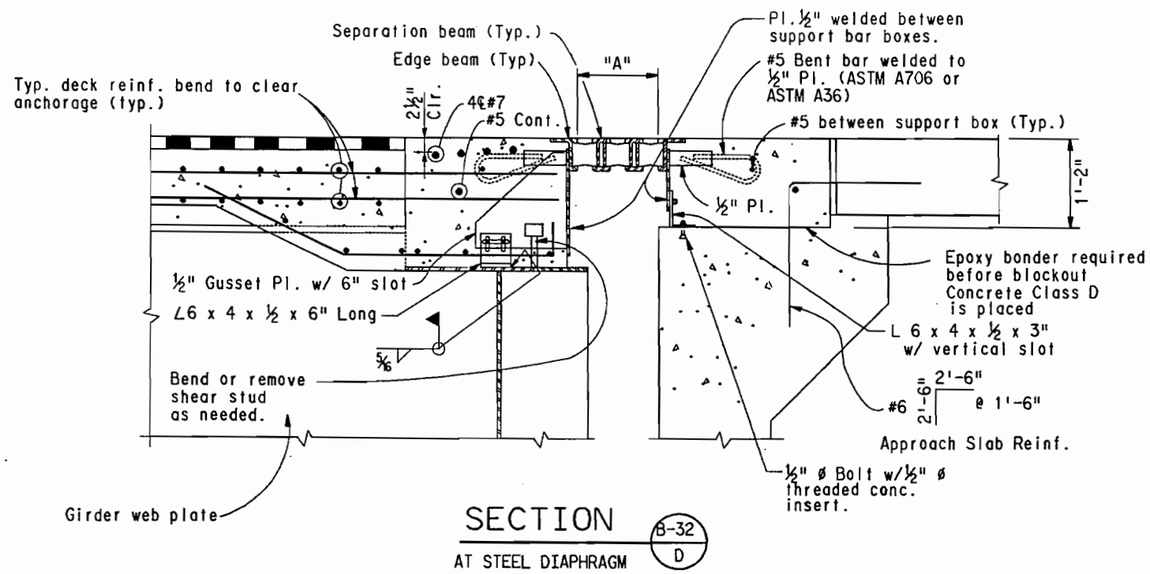

SECTION B-32 D
AT STEEL DIAPHRAGM

Dimension "A"		
STRUCTURE TEMP.	ABUTMENT 1	ABUTMENT 6
30° F.	6 5/16"	6 3/16"
40° F.	6"	6"
50° F.	5 11/16"	5 13/16"
60° F.	5 7/16"	5 5/8"
70° F.	5 1/8"	5 3/8"
80° F.	4 13/16"	5 3/16"
90° F.	4 9/16"	5"
100° F.	4 1/4"	4 13/16"

NOTES FOR COVER PLATES :
1. Cover Plates and related work shall not be paid for separately, but shall be included in payment for item 518.
2. Cover Plate assembly shall be galvinized after fabrication.
3. Cover Plates require colored coating, See specifications.

ISSUED FOR CONSTRUCTION
7-9-90

	INITIAL	DATE		
Designed By	AEG	2-90	Checked By	AEG 3-1-90
Checked By	MRM	2-90	Quantities By	DBW 3-1-90
Detailed By	AEG	2-90	Checked By	JHP 3-90
				AEG 3-90

E-470
Engineer 470 Partnership

DIVISION OF HIGHWAYS
I-25 / 470 INTERCHANGE
RAMP E FLYOVER
BRIDGE EXPANSION DEVICE
(0-6 INCH)

Designer A. Griffith		Structure Numbers	F - 17 - JW
Detailer A. Griffith			
Drawing Number	B-33 of	45	Drawings

$$$$DGNSPEC$$$$$$$$$$$$$$$$
USERNAME
S:\2445\SEPAL\61\SERAL0213.90V

AS CONSTRUCTED					
NO REVISIONS		REVISED		VOID	

FEDERAL ROAD REGION NO.	DIVISION	PROJECT NUMBER	SHEET NUMBER
VIII	COLORADO	1A06	144

REVISIONS			
A-1	4-02-90	Details, Dimen, Pay Length	AEG
	- -		
	- -		

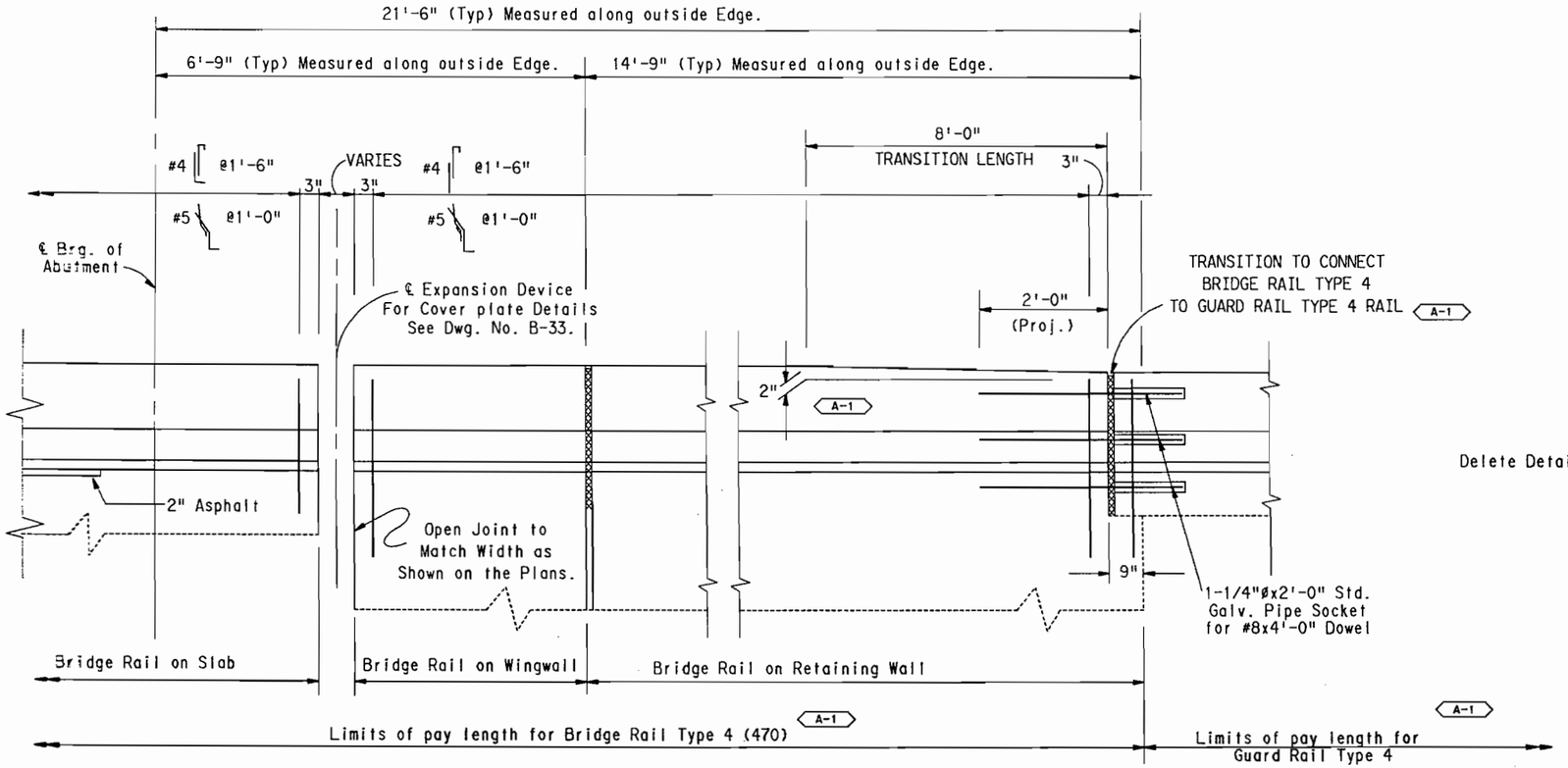

Delete Detail for Guard Rail
A-1

ELEVATION

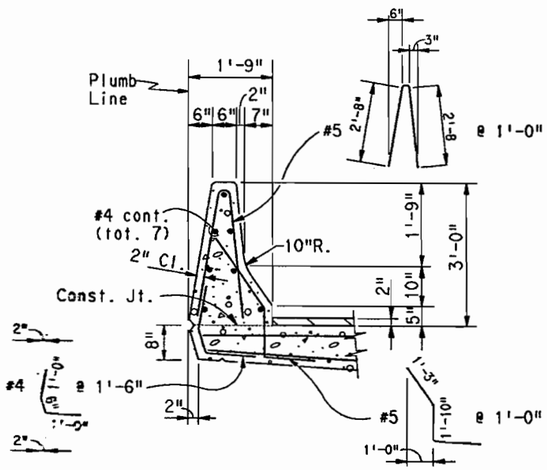

ON CONCRETE SLAB WITH ASPHALT

See Details Dwg. No. B-29 for Reinforcing @ Expansion Device.

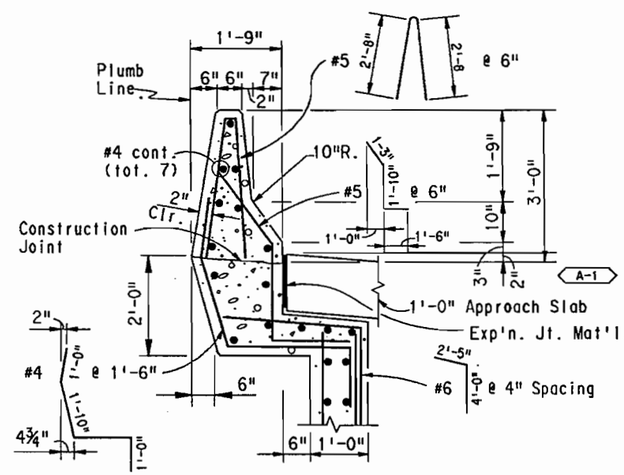

ON WINGWALL

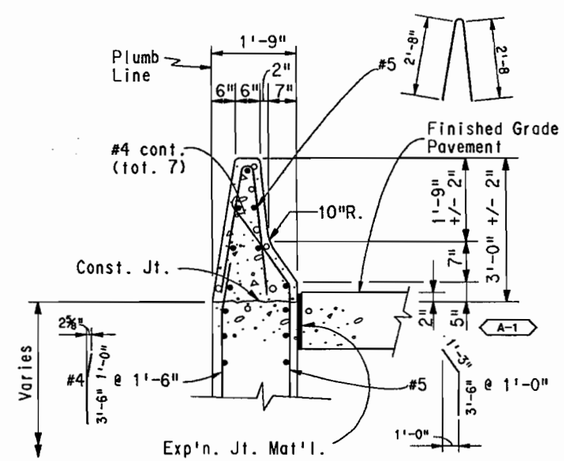

ON RETAINING WALL

NOTES:

Back fill wingwalls and retaining walls before barrier is placed.

All bridge rail concrete shall be Concrete Class D.

Longitudinal reinforcement shall stop at all expansion joints.

Bridge rail shall be constructed plumb, as shown.

Bridge rail Concrete Class D and reinforcement located entirely above the Construction Joint, shall be included in Item No. 606, Bridge Rail Type 4 (470).

For Guard Rail Type 4, see Std. M-606-12 for details.

For Guard Rail Type 3, see Std. M-606-12 for details of transition and attachment to concrete barrier. See Std. M-606-1 for details of Guard Rail.

DESIGN DATA

Concrete Class D : f'c = 4500 psi at 28 days
fc = 1800 psi, n = 8
Reinforcing Steel : fy = 60,000 psi
fs = 24,000 psi

ISSUED FOR CONSTRUCTION

7-9-90

Information Only for Bridge Rail Type 4 (470)

DESCRIPTION	UNIT	PER UNIT
Concrete	Cu.Yd.	0.11
Reinf. Steel (Epoxy)	lb.	10.5

E-470
Engineer 470 Partnership

DIVISION OF HIGHWAYS
I-25 / 470 INTERCHANGE
RAMP E FLYOVER
BRIDGE RAIL TYPE 4 (470)

Designer A. Griffith		Structure Numbers	F - 17 - JW
Detailer A. Griffith			
Drawing Number	B-34 of 45 Drawings		

Designed By AEG	INITIAL	DATE	
Checked By JHP			
Detailed By AEG			
Quantities By AEG			
Checked By JHP			

BRIDGE RAIL TYPE 4 (470)

SERAL 0113 90V

AS CONSTRUCTED		
NO REVISIONS	REVISED	VOID

FEDERAL ROAD REGION NO.	DIVISION	PROJECT NUMBER	SHEET NUMBER
VIII	COLORADO	1A06	145

REVISIONS			
A-2	4-09-90	Anchor Bolt Size & Details	AEG
	- -		
	- -		

VALUES FOR ONE BEARING DEVICE

Location	Qty.	FX GD EXP	Angle θ (Degrees)	Vertical Load (Kips) Perm. D.L.	Vertical Load (Kips) Max. Load	Horizontal Load (Kips) Longit.	Horizontal Load (Kips) Transv.	Longitudinal Movement (Inches)	Initial Longitudinal Offset (Inches)	Conc. Girder No. Studs	Steel Girder No. Plug Welds	Rotation (Radians)	X-Slope % + Looking Sta. Ah'd.	Grade % + Sta. Ah'd.	Masonry Base Plate C	Masonry Base Plate D	A-2 Anchor Bolts Size	A-2 Anchor Bolts No.	A-2 Anchor Bolts Type	Top Plate Sole Plate A	Top Plate Sole Plate B	Base Pot I.D.	Height H
Abut.1,Left	1	GD	98° 02' 05"	111	233	5.5	33.5	4.04"	See Table Dwg. No. B-36		4	0.00348	+7.900	+0.558	25"	15"	1¼"	4	A325	18.5"	20.5"	10.02"	7.625"
Abut.1,Right	1	EXP	90° 00' 00"	124	276	6.2	6.2	4.04"			4	0.00323	+7.900	+0.558	25"	15"	1¼"	4	A325	18.5"	20.5"	10.02"	7.625"
Pier 2, Left	1	GD	94° 37' 13"	454	768	22.7	130.4	2.98"			4	0.00027	+7.900	+0.558	35"	24"	1¼"	4	A325	28"	29"	16.72"	10.25"
Pier 2, Right	1	EXP	90° 00' 00"	457	785	22.8	22.8	2.98"			4	0.00039	+7.900	+0.558	35"	24"	1¼"	4	A325	28"	29"	16.97"	10.25"
Pier 3, Left	1	FX	90° 00' 00"	558	888	73.1	73.1	—			4	0.00162	+7.900	+0.558	33"	26.5"	1¼"	4	A325	26.5"	26.5"	17.98"	8.625"
Pier 3, Right	1	FX	90° 00' 00"	463	791	73.1	73.1	—			4	0.00027	+7.900	+0.558	33"	26.5"	1¼"	4	A325	26.5"	26.5"	16.97"	8.625"
Pier 4,Left	1	EXP	90° 00' 00"	513	827	25.7	25.7	0.01"			4	0.00570	+7.900	+0.558	35"	24"	1¼"	4	A325	28"	29"	17.54"	10.25"
Pier 4,Right	1	EXP	90° 00' 00"	523	846	26.2	26.2	0.01"			4	0.00575	+7.900	+0.558	35"	24"	1¼"	4	A325	28"	29"	17.54"	10.25"
Pier 5,Left	1	FX	90° 00' 00"	537	765	76.7	76.7	—			4	0.00145	+7.900	+0.558	33"	26.5"	1¼"	4	A325	26.5"	26.5"	16.72"	8.625"
Pier 5,Right	1	FX	90° 00' 00"	534	829	76.7	76.7	—			4	0.00043	+7.900	+0.558	33"	26.5"	1¼"	4	A325	26.5"	26.5"	17.54"	8.625"
Abut.6,Left	1	GD	85° 58' 30"	130	186	6.5	39.6	2.81"			4	0.00610	+7.900	+0.558	25"	15"	1¼"	4	A325	18.5"	20.5"	10.02"	7.625"
Abut.6,Right	1	EXP	90° 00' 00"	147	232	7.4	7.4	2.81"			4	0.00506	+7.900	+0.558	25"	15"	1¼"	4	A325	18.5"	20.5"	10.02"	7.625"

ISSUED FOR CONSTRUCTION

7-9-90

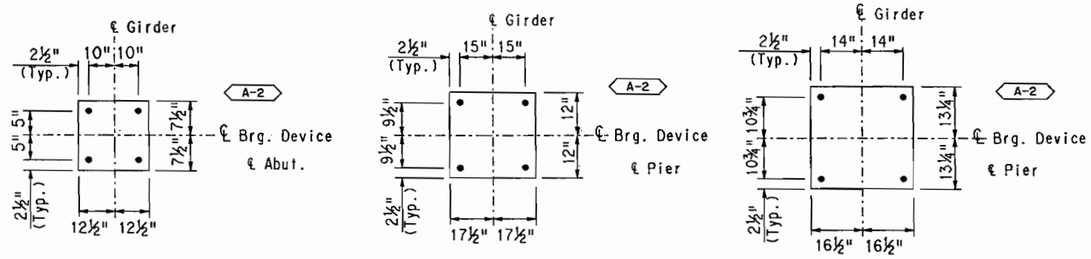

Abut. 1 & 6 ℄ Left & Right Bearing Devices

Piers 2 & 4 ℄ Left & Right Bearing Devices

Piers 3 & 5 ℄ Left & Right Bearing Devices

MASONARY PLATE & ANCHOR BOLT SPACING DETAILS

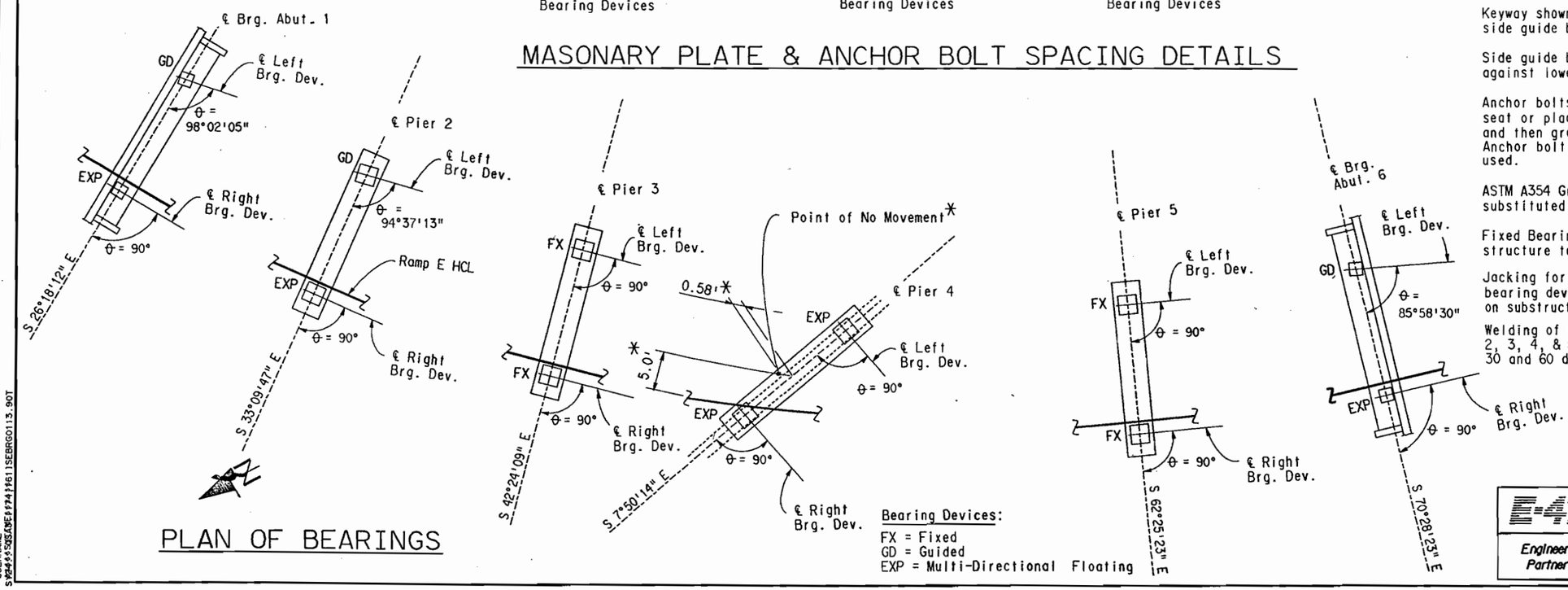

PLAN OF BEARINGS

Bearing Devices:

FX = Fixed
GD = Guided
EXP = Multi-Directional Floating

NOTES:

All structural steel for the bearing devices, including sole plates, top plates and masonry plates, shall be AASHTO M-183 (ASTM A36) unless otherwise shown.

Anchorages shall be included in bid price for Item No. 512 Bearing Device (Type III).

Bearing seat elevations at abutments and piers shall be checked and adjusted according to the final dimensions of bearing assemblies adopted.

Bearing assemblies shall be constructed so as to permit removal for repair or replacement by jacking the bridge from the seat by ¼".

Without alteration of connector sizes and locations, the contractor may propose using other similar bearings which meet the requirements on this drawing and in the special provisions, subject to the engineer's approval. "H" shall be at least 7".

The longitudinal movement tabulated is based on a total temperature change of 140°F (70°F rise and 70°F drop from a mean termperature of 40°F). The bearing device shall have a minimum of 2" additional movement capacity longitudinally each way from centerline of base pot.

All surfaces of structural steel components not connected to stainless steel, T.F.E. or elastomer shall be completely zinc metalized in accordance with AWS C.2.2. latest issue, to a minimum thickness 8 mils on exposed surfaces and 3 mils on protected surfaces.

Keyway shown in Section B is schematic. Contractor may supply side guide bars as alternate.

Side guide bars must bear only against upper elements and not against lower element (Base Pot).

Anchor bolts may be set, either in the wet concrete of bearing seat or placed within a formed cylindrical void 4" in diameter and then grouted with high strength non-shrink or epoxy grout. Anchor bolt spacings may be adjusted to suit the actual bearing used.

ASTM A354 GrBC, or A354 GrBD, or A449, or A490, or A687 may be substituted for ASTM A325 anchor bolts.

Fixed Bearing Devices shall be plug welded when the structure temperature is between 30° and 60° F.

Jacking for bearing device removal or replacement shall be one bearing device at a time. Jacking locations shall be as shown on substructure drawings. No live load is allowed during jacking.

Welding of bearing sole plate to girder bottom flange at Piers 2, 3, 4, & 5 shall be done at ambient temperatures between 30 and 60 degrees F.

INITIAL	DATE	Checked By	JHP	2-90
JHP	2-90	Quantities By	AEG	2-90
AEG	3-90	Checked By	JHP	2-90
AEG	1-90		AEG	2-90
Designed By				
Checked By				
Detailed By				

DIVISION OF HIGHWAYS

I-25/ 470 INTERCHANGE
RAMP E FLYOVER
BEARING DEVICE (TYPE III)
DETAILS

E-470
Engineer 470 Partnership

Designer J. Peck		Structure Numbers	F - 17 - JW
Detailer A.Griffith			
Drawing Number	B-35	of	45 Drawings

BEARING DEVICE (TYPE III) SHEET 1

SERBG0113.90T

AS CONSTRUCTED			
NO REVISIONS		REVISED	VOID

FEDERAL ROAD REGION NO.	DIVISION	PROJECT NUMBER	SHEET NUMBER
VIII	COLORADO	1A06	146

REVISIONS			
A-1	4-02-90	Brg. Seat & Plug Weld Details	AEG
	- -		
	- -		

INITIAL LONGITUDINAL OFFSET				
Str. Temp.	Abut. 1	Pier 2	Pier 4	Abut. 6
30° F	−5/16"	−7/32"	0"	−3/16"
40° F	0"	0"	0"	0"
50° F	5/16"	7/32"	0"	3/16"
60° F	9/16"	7/16"	0"	3/8"
70° F	7/8"	5/8"	0"	5/8"
80° F	1 5/32"	7/8"	0"	13/16"

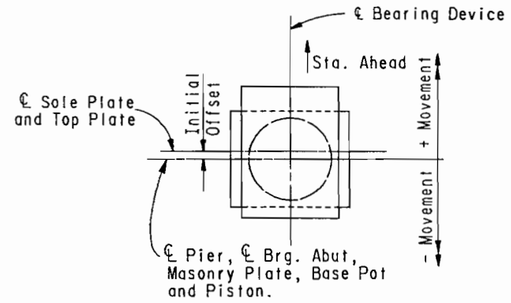

INITIAL OFFSET

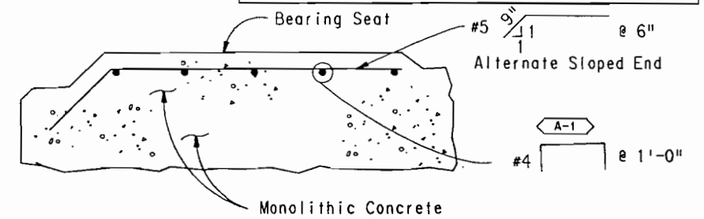

BEARING SEAT

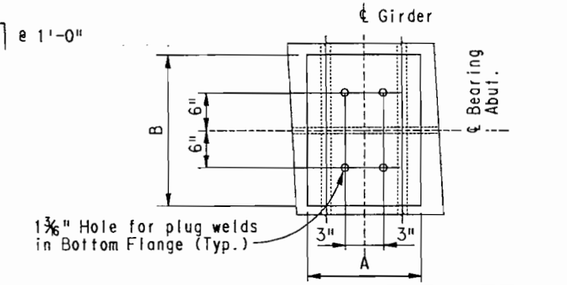

ABUTMENT SOLE PLATE

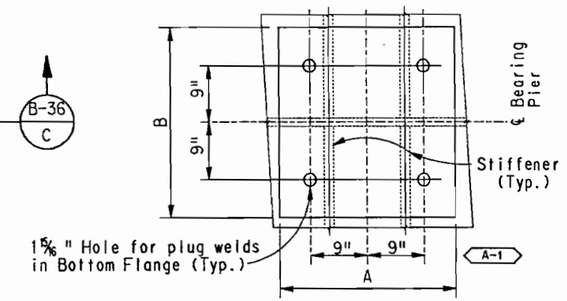

PIER SOLE PLATE

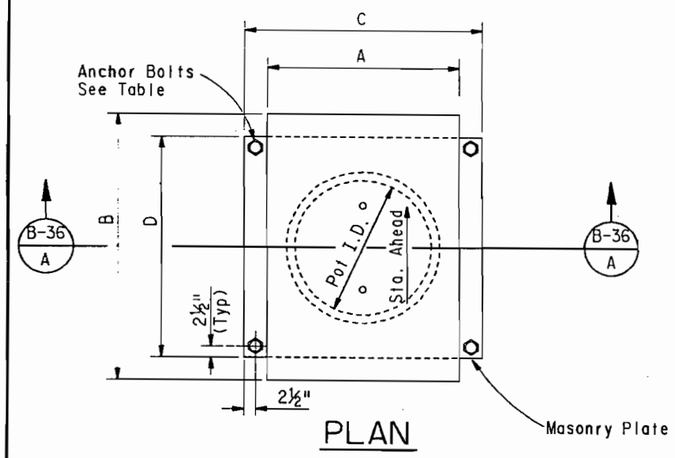

PLAN

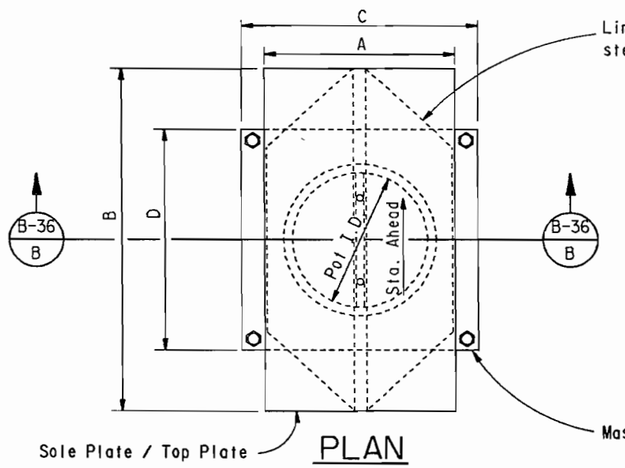

PLAN

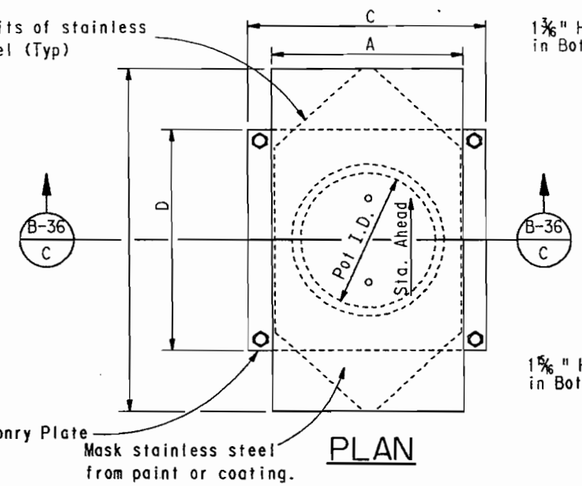

PLAN

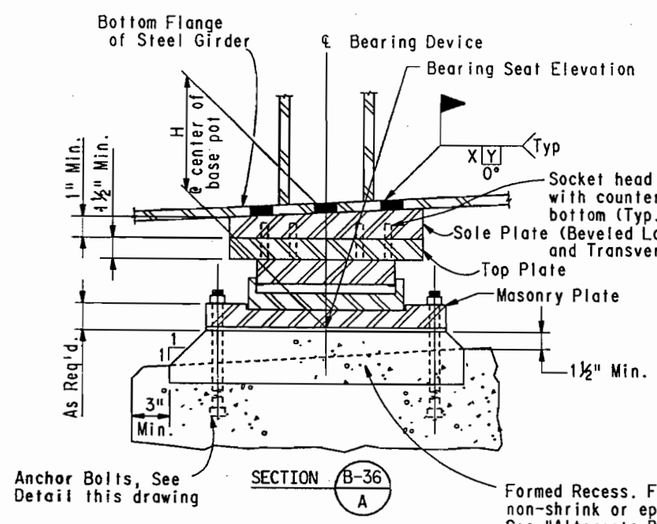

FIXED BEARING

(FX)

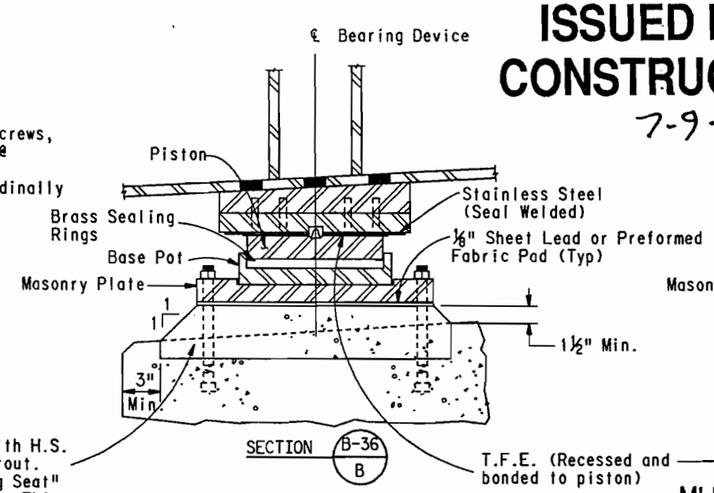

UNI-DIRECTIONAL

GUIDED EXPANSION BEARING

(GD)

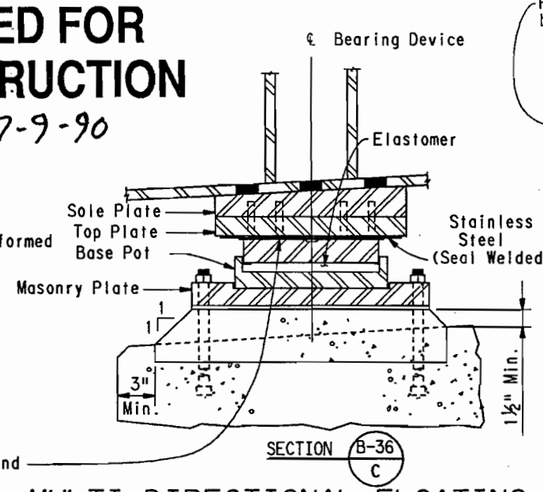

MULTI-DIRECTIONAL FLOATING

EXPANSION BEARING

(EXP)

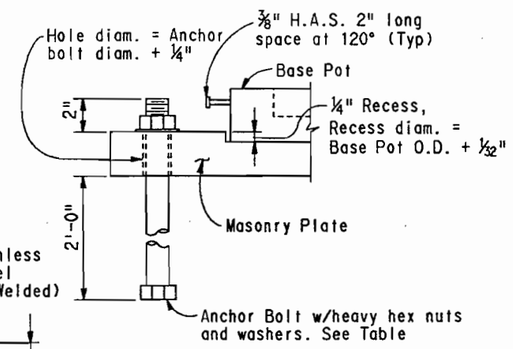

ANCHOR BOLT DETAIL

ISSUED FOR CONSTRUCTION

7-9-90

INITIAL	DATE
JHP	2-90
AEG	2-90
GMC	2-90

Designed By	JHP	3-8-90
Checked By	AEG	3-8-90
Detailed By	GMC	3-8-90
Quantities By	JHP	3-8-90
Checked By	AEG	3-8-90

DIVISION OF HIGHWAYS

I-25 / 470 INTERCHANGE

RAMP E FLYOVER

BEARING DEVICE (TYPE III)

DETAILS

E-470

Engineer 470 Partnership

Designer J. Peck		Structure Numbers	F - 17 - JW
Detailer G.Christnacht			
Drawing Number	B-36	of	45 Drawings

$$$$$DGNSPEC$$$$$$$$$$$$$$$$$$
USERNAME
S$24$$SQSAGE$$P4$$61SEBRG0213.90T

FEDERAL ROAD REGION NO.	DIVISION	PROJECT NUMBER	SHEET NUMBER
VIII	COLORADO	1A06	147

AS CONSTRUCTED		
NO REVISIONS	REVISED	VOID

REVISIONS

A-1	4-2-90	Dimension	AEG
	- -		
	- -		

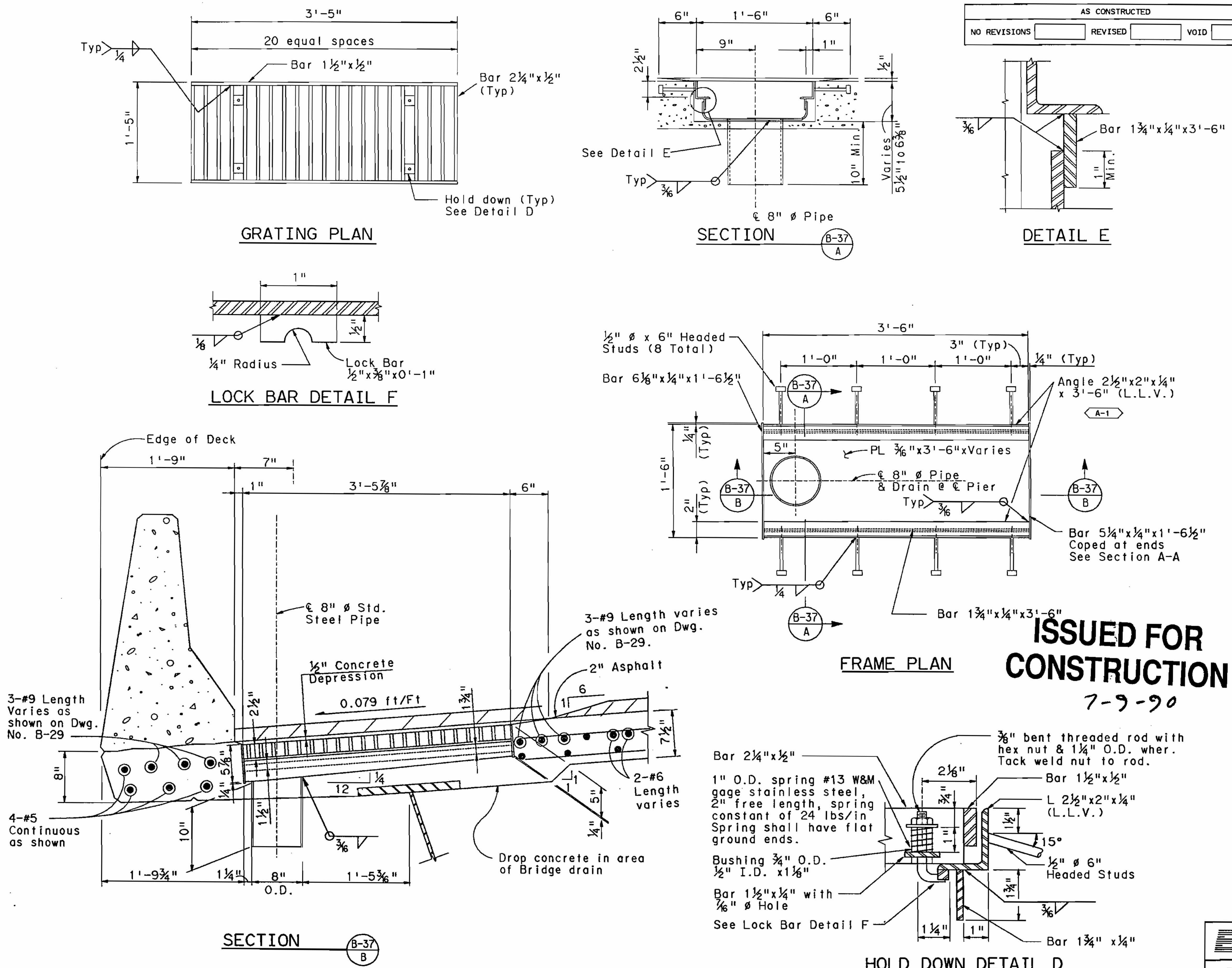

ISSUED FOR CONSTRUCTION
7-9-90

FABRICATION NOTES:

1. All pipes to be 8"x 0.322 welded steel pipe, ASTM A53 Grade B, except as noted. Fittings and bends shall have a minimum wall thickness of ¼".
2. All joints and/or connections shall be butt-welded or connected by a pipe sleeve and shall be smooth throughout inside of pipe.
3. All bends shall be on a 2'-6" minimum radius measured along centerline of pipe. All bends shall be smooth.
4. Fabricated deck drains, 8" diameter pipes, and pipe supports shall be galvanized after fabrication.
5. All steel plates, bars and shapes shall conform to ASTM A36 unless otherwise noted. All anchor bolts shall conform to ASTM A307.
6. It is estimated 135 L.F. (total) of drain pipe will be required for Piers #3 & #5. All work and materials to be paid for under Item 513, Bridge Drain (8-Inch).

INSTALLATION NOTES:

1. All pipes shall be supported at 4'-0" max. spacing as shown in Detail on Drawing No. B-38.
2. All galvanized metal surfaces to be painted shall be blast cleaned and chemically treated as indicated in the specifications.
3. All visible metal surfaces for bridge drains and 8" diameter pipes shall be painted to match existing concrete surfaces.
4. Paint shall be a two-coat urethane system, or an epoxy mastic-urethane system as indicated in the specifications.
5. Place first shear Studs 2'-3" each side of ¢ Pier #3 & #5 for Web #1.
6. Locate Pipe clamp at a maximum of 4'-0" spacing and attach to box girder, pier cap and pier column, as shown.
7. Required at the following locations: Pier #3 & Pier #5 at inside Shoulder.

	INITIAL	DATE			
Designed By	AEG	1-90	Checked By	AEG	3-90
Checked By	MRW	1-90	Quantities By	JHP	3-90
Detailed By	AEG	1-90	Checked By	JHP	3-90
			Checked By	AEG	3-90

E-470
Engineer 470 Partnership

DIVISION OF HIGHWAYS
I-25 / 470 INTERCHANGE
RAMP E FLYOVER
BRIDGE DRAIN (SPECIAL)

Designer A. Griffith	Structure Numbers	F - 17 - JW
Detailer A. Griffith		
Drawing Number B-37	of 45	Drawings

$$$$DGNSPEC$$$$$$$$$$$$$
USERNAME
SEDRN0113.90X

BRIDGE DRAIN (SPECIAL) SHEET 1
SEDRN0113.90X

AS CONSTRUCTED					
NO REVISIONS		REVISED		VOID	

FEDERAL ROAD REGION NO.	DIVISION	PROJECT NUMBER	SHEET NUMBER
VIII	COLORADO	1A06/1802	148

REVISIONS		
A-1	10-5-89	
	- -	
	- -	

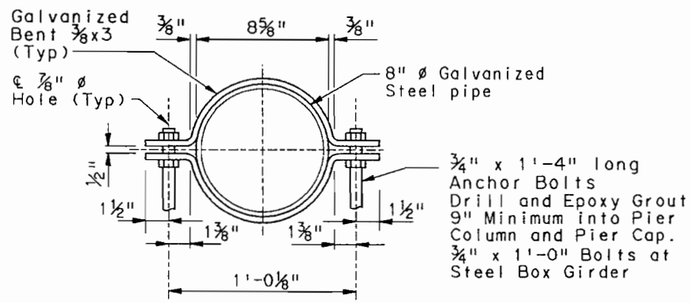

DRAIN PIPE CLAMP DETAIL

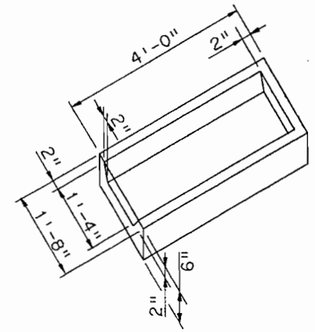

CONCRETE SPLASH BLOCK DETAIL

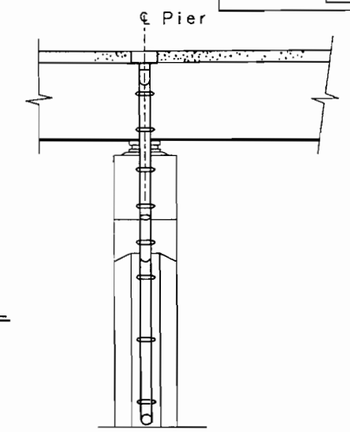

SECTION B-38 A

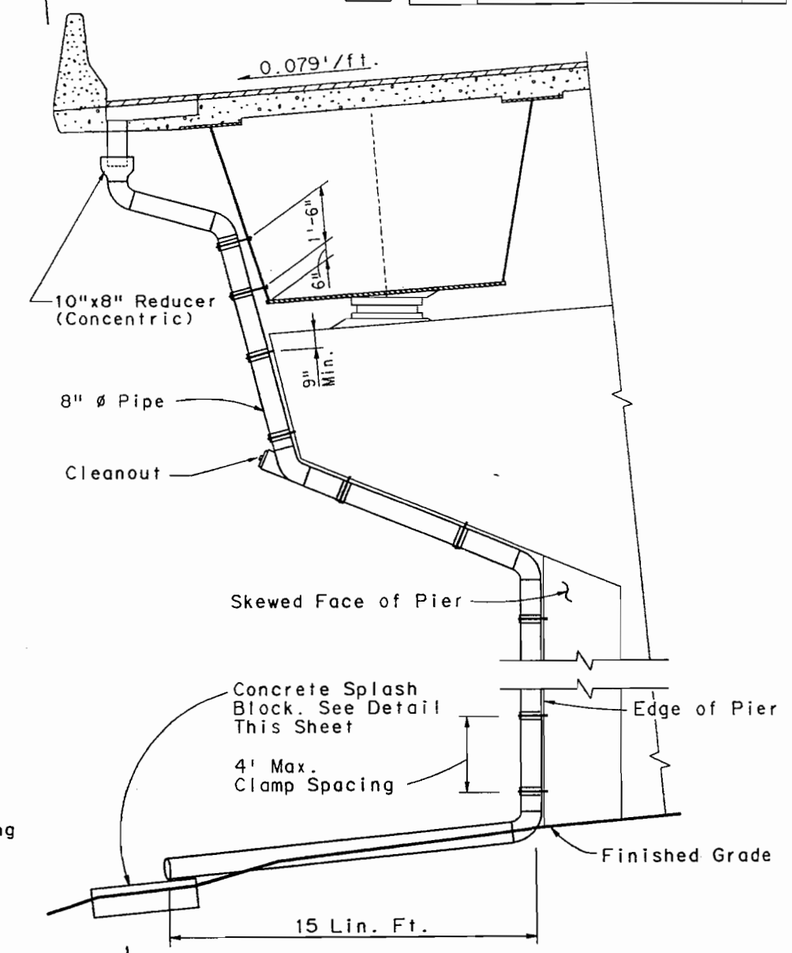

BRIDGE DRAIN DETAIL

For Pier #3 and #5

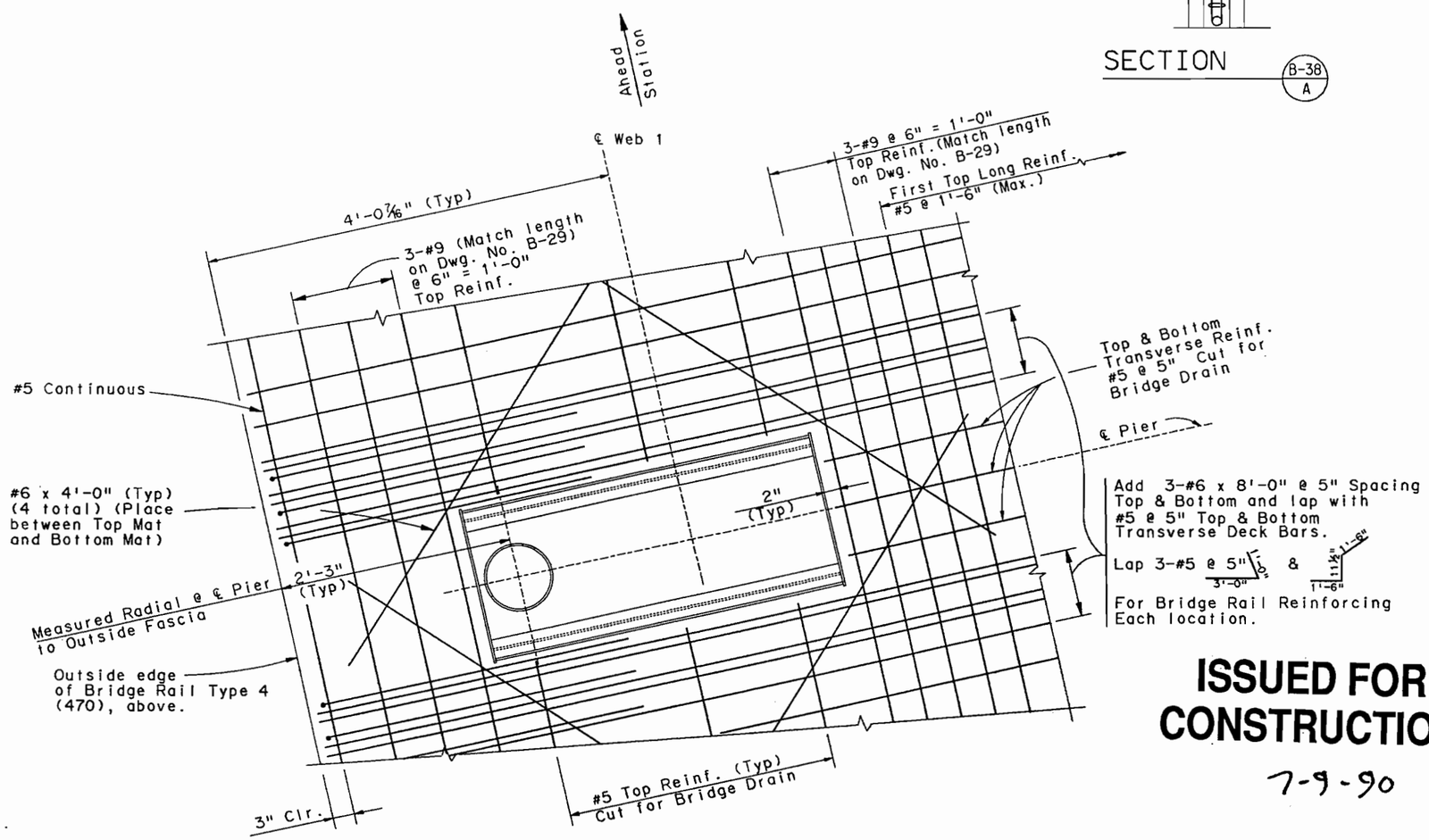

DECK REINFORCING FOR BRIDGE DRAIN

This sheet used in Conjunction with Dwg. No. B-28 & B-29.
Longitudinal Bottom Reinf. not shown for clarity.

ISSUED FOR CONSTRUCTION

7-9-90

	INITIAL	DATE			
Designed By	AEG	1-90	Checked By	AEG	3-90
Checked By	MPM	1-90	Checked By	JHP	3-90
Detailed By	AEG	1-90	Quantities By	JHP	3-90
			Checked By	AEG	3-90

E-470

Engineer 470 Partnership

DIVISION OF HIGHWAYS

I-25 / 470 INTERCHANGE
RAMP E FLYOVER
BRIDGE DRAIN (SPECIAL)

Designer A. GRIFFITH		Structure Numbers	F - 17 - JW
Detailer A. GRIFFITH			
Drawing Number	B-38	of	45 Drawings

BRIDGE DRAIN SHEET 2

SEDRN0213.90X

AS CONSTRUCTED			
NO REVISIONS		REVISED	VOID

FEDERAL ROAD REGION NO.	DIVISION	PROJECT NUMBER	SHEET NUMBER
VIII	COLORADO	1A06/1B02	149

REVISIONS		
- -		
- -		
- -		

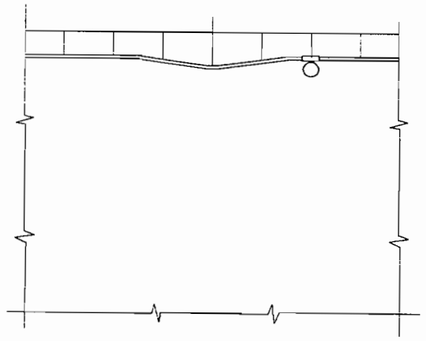

SECTION B31/A

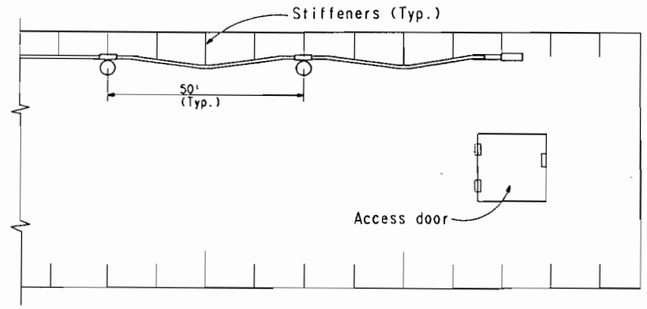

PLAN

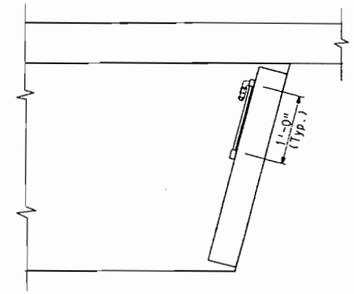

SECTION B31/B

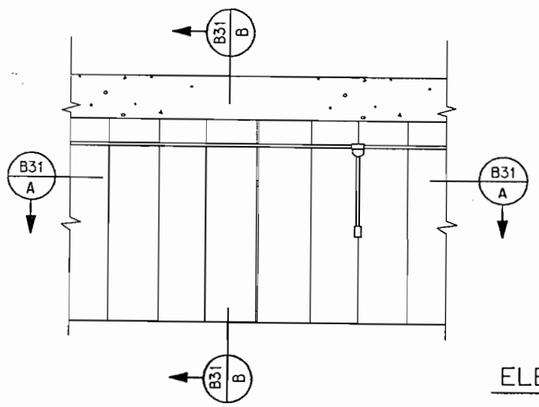

ELEVATION

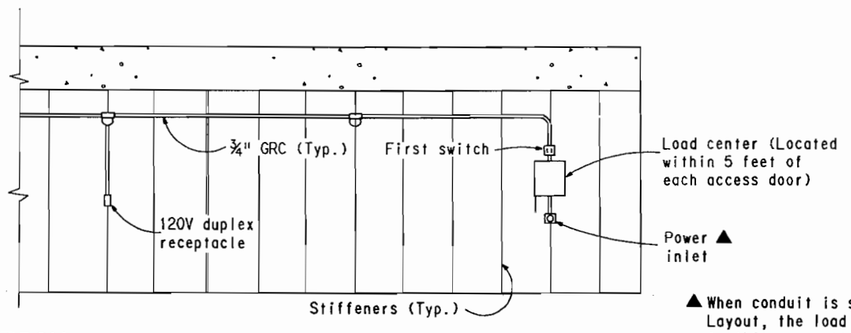

▲ When conduit is shown on the construction Layout, the load center shall be connected to this power source instead of using a separate power inlet. Use 3-#6 copper wires in conduit.

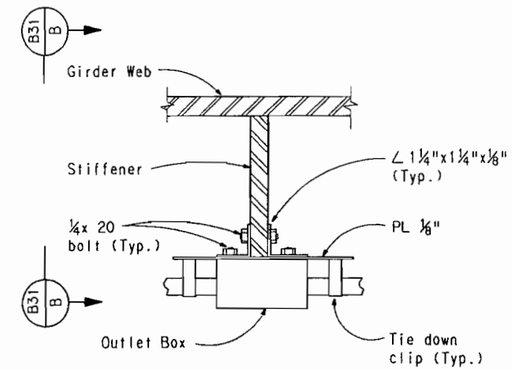

PLAN

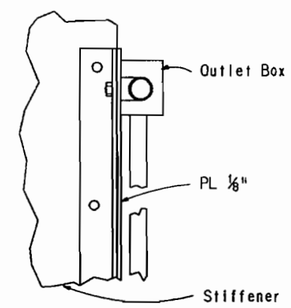

SECTION B31/C

MOUNTING DETAIL

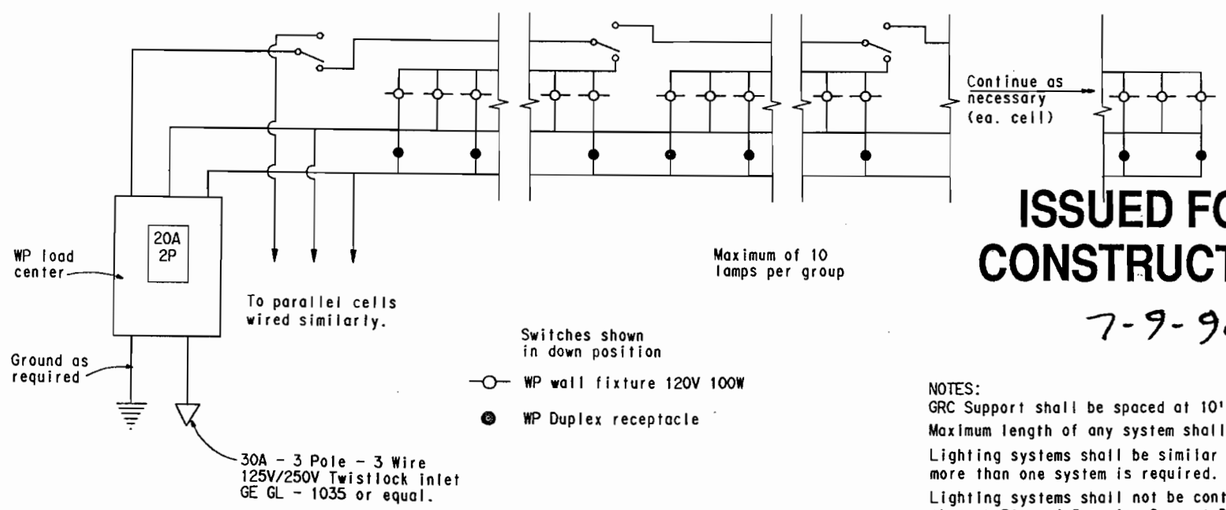

WIRING DIAGRAM

ISSUED FOR CONSTRUCTION

7-9-90

NOTES:
GRC Support shall be spaced at 10' (Max.)
Maximum length of any system shall be 1300'.
Lighting systems shall be similar length when more than one system is required.
Lighting systems shall not be continuous through Pier #4 Interior Support Diaphragm.

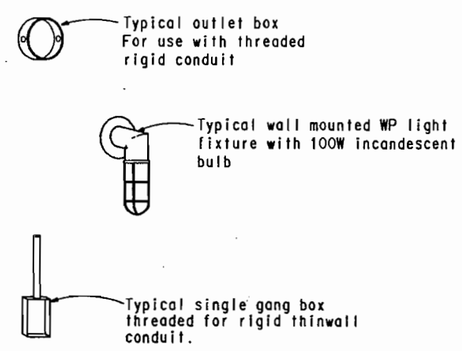

FIXTURE DETAILS

INITIAL	DATE	Checked By	AEG	2-90
AEG	1-90		JLS	2-90
JLS	1-90	Quantities By	JHP	2-90
GMC	1-90	Checked By	AEG	2-90

Designed By
Checked By
Detailed By

USERNAME:
$$$$$DGNSPEC$$$$$$$$$$$$$$$$
S:\24115\DGN\E470\24J611SELIT0113.90X

E-470
Engineer 470 Partnership

DIVISION OF HIGHWAYS
I-25/470 INTERCHANGE
RAMP E FLYOVER
INTERIOR LIGHTING
(STEEL BOX GIRDER)

Designer A. GRIFFITH		Structure Numbers	F - 17 - JW
Detailer G. Christnacht			
Drawing Number	B-39	of	45 Drawings

INTERIOR LIGHTING DETAIL
SELIT0113.90X

FEDERAL ROAD REGION NO.	DIVISION	PROJECT NUMBER	SHEET NUMBER
VIII	COLORADO	1A06/1802	150

AS CONSTRUCTED

NO REVISIONS ☐ REVISED ☐ VOID ☐

REVISIONS

- -		
- -		
- -		

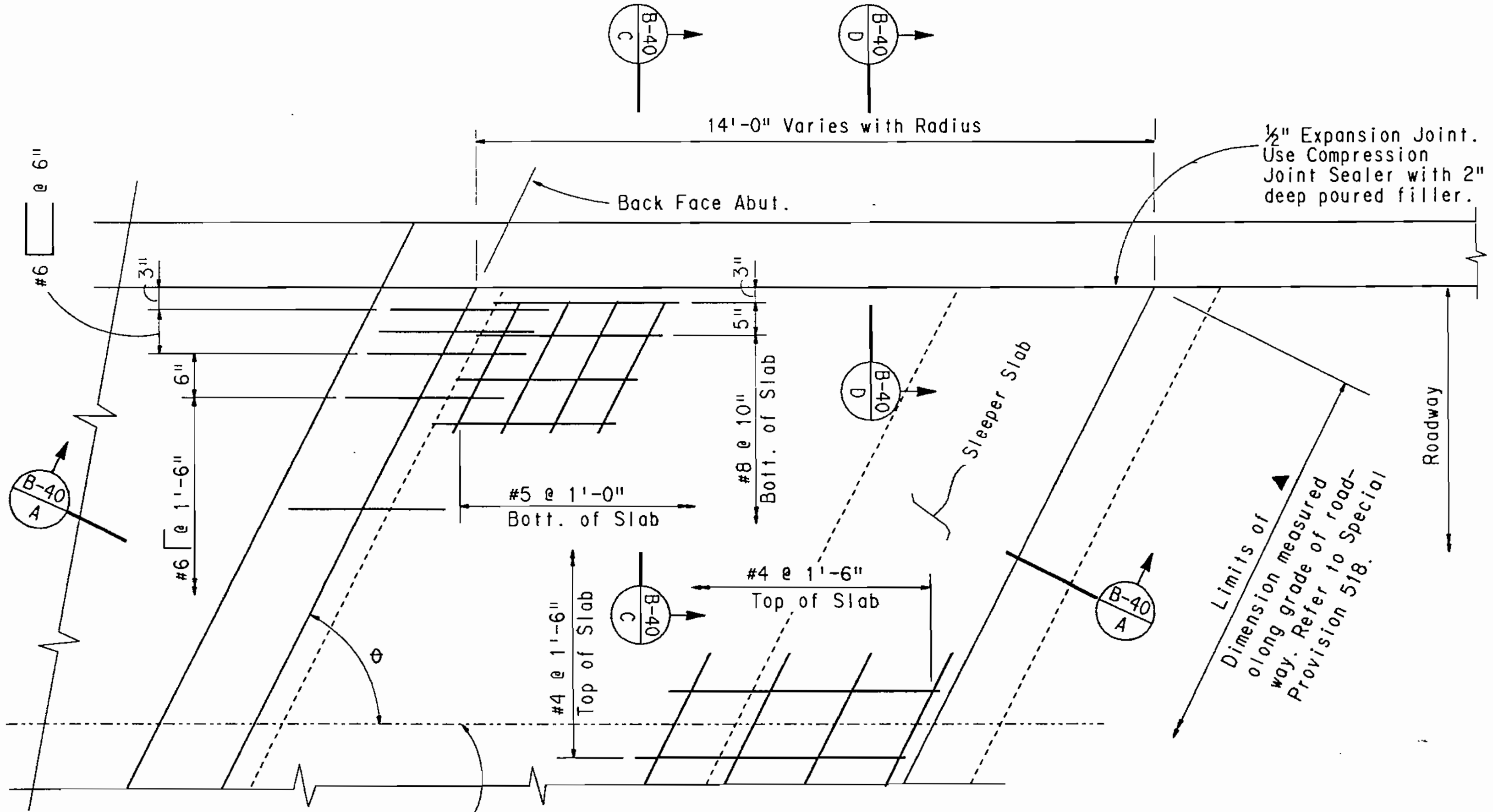

PLAN

θ = 89°59'44.37" Abut. #1
θ = 89°59'13.97" Abut. #6

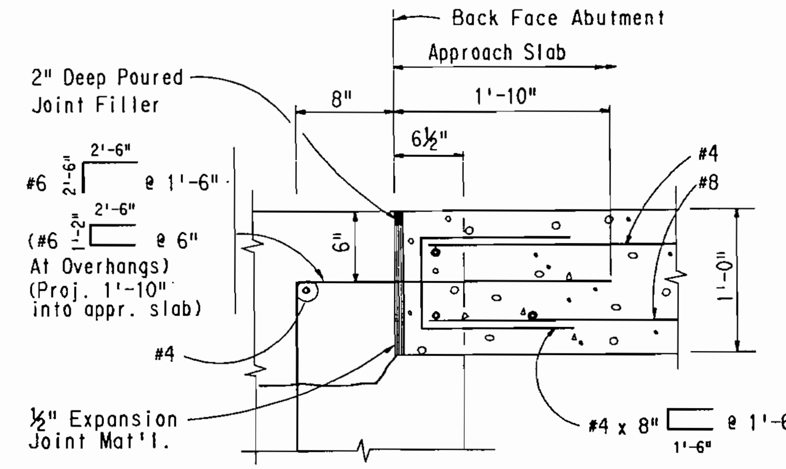

DETAIL B

GENERAL NOTES:

Concrete Class D (Bridge) shall be used for approach slabs.

The 20 Gauge Galvanized sheet metal and the 1" Styrofoam will not be measured and paid for separately, but shall be included in the work.

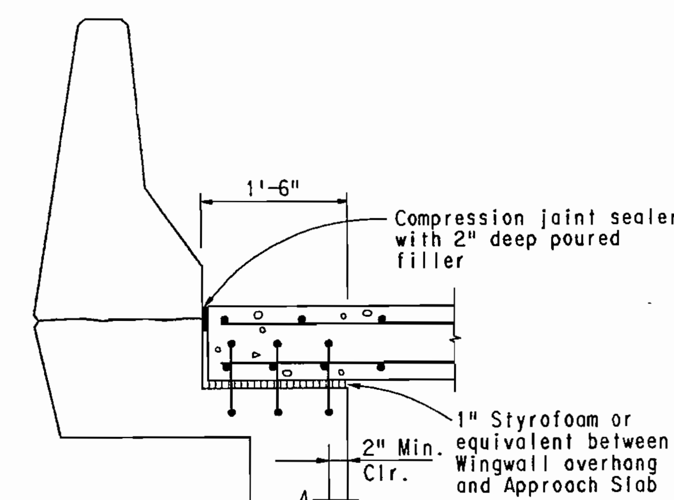

SECTION B-40 C
On Wingwall

ISSUED FOR CONSTRUCTION

7-9-90

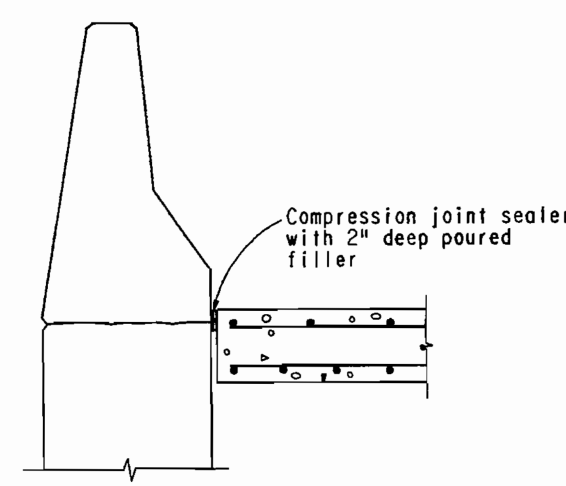

SECTION B-40 D
On Retaining Wall

▲ 4" wide x 6" Bridge Compression Joint Sealer.

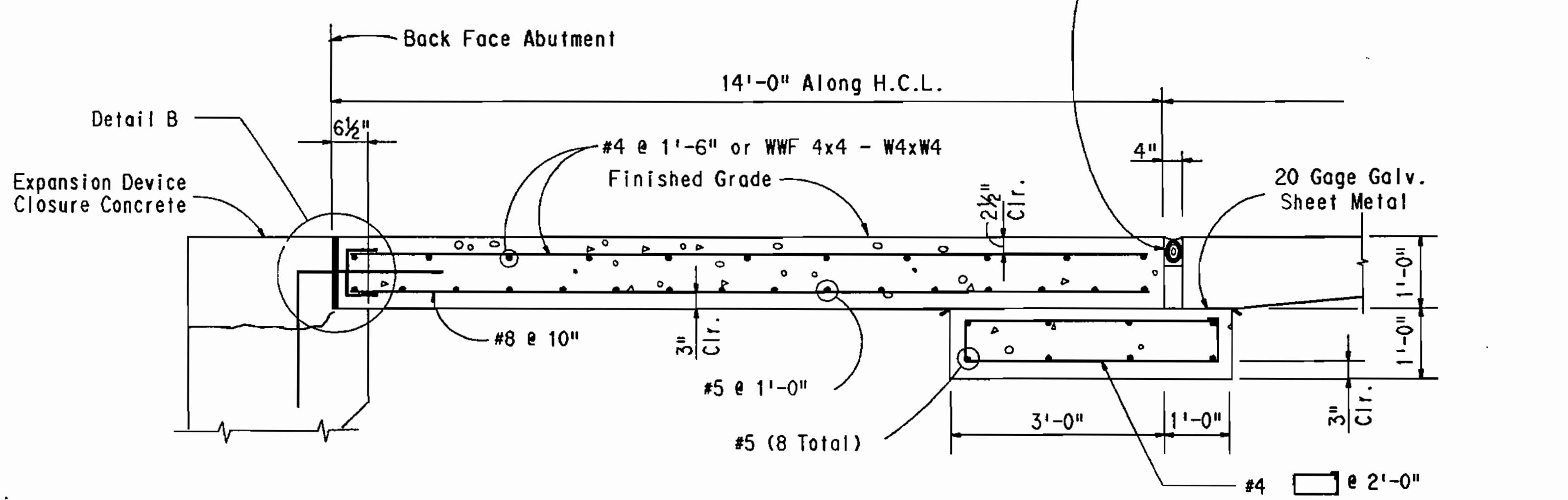

SECTION B-40 A
Taken perpendicular to ℄ Bearing

Designed By	INITIAL	DATE	Checked By
Designed By	AEG	1-90	AEG 2-90
Checked By	JHP	1-90	Quantities By JHP 2-90
Detailed By	GMC	1-90	Checked By JHP 2-90 / AEG 2-90

E-470
Engineer 470 Partnership

DIVISION OF HIGHWAYS
I-25 / 470 INTERCHANGE
RAMP E FLYOVER
APPROACH SLAB DETALIS

Designer A. Griffith	Structure Numbers	F - 17 - JW	
Detailer G.Christnacht			
Drawing Number B-40	of 45	Drawings	

$$$$DGNSPEC$$$$$$$$$$$$$$$
USERNAME
$$$$$$SQSAME$$$$$$611SEAPS0113.90W

APPROACH SLAB DETAILS - CONCRETE
SEAPS0113.90W

AS CONSTRUCTED				
NO REVISIONS		REVISED		VOID

FEDERAL ROAD REGION NO.	DIVISION	PROJECT NUMBER	SHEET NUMBER
VIII	COLORADO	1A06/1802	151

REVISIONS		
- -		
- -		
- -		

TABLE OF ESTIMATED ELEVATIONS FOR INFORMATION ONLY		
LOCATION	ELEVATION A	ELEVATION B
ABUT. #1	5892	5892
ABUT. #6	5886	5886

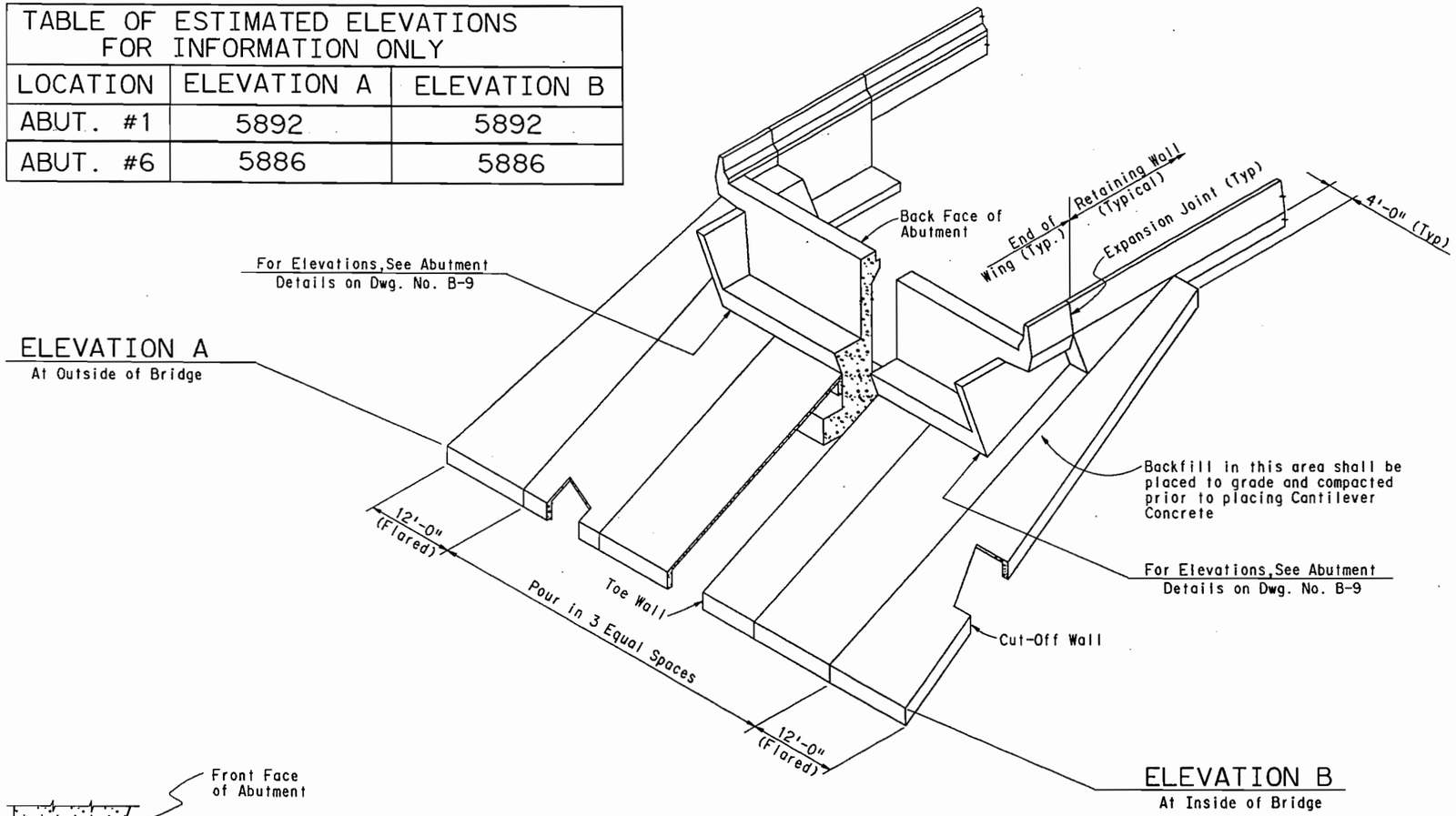

ABUTMENT #1 SHOWN LOOKING BACK STATION
ABUTMENT #6 SIMILIAR, OPPOSITE HAND.

NOTES

1. Slope paving shall be poured in 3 equal transverse section with a tooled construction joint at each section.
2. Wire fabric shall be 2" from the end of the joint and shall lap 8" at splices.
3. Where slope paving butts against structural concrete, separate with 1" expansion joint material.
4. Expansion joint material & welded wire fabric shall not be paid for separately, but shall be included in item 507 concrete slope and ditch paving (reinforced).
5. The surface of finished slope paving shall receive a float finish of uniform appearance free of float marks and smoothly troweled construction joints.
6. Structure excavation for concrete slope and ditch paving shall be limited to the actual volume occupied by the slope paving concrete.
7. All exposed concrete surfaces down to 1'-0" below finished grade shall be finished with a Class 1 finish, colored coating meeting the requirements in special provision revision of section 601.

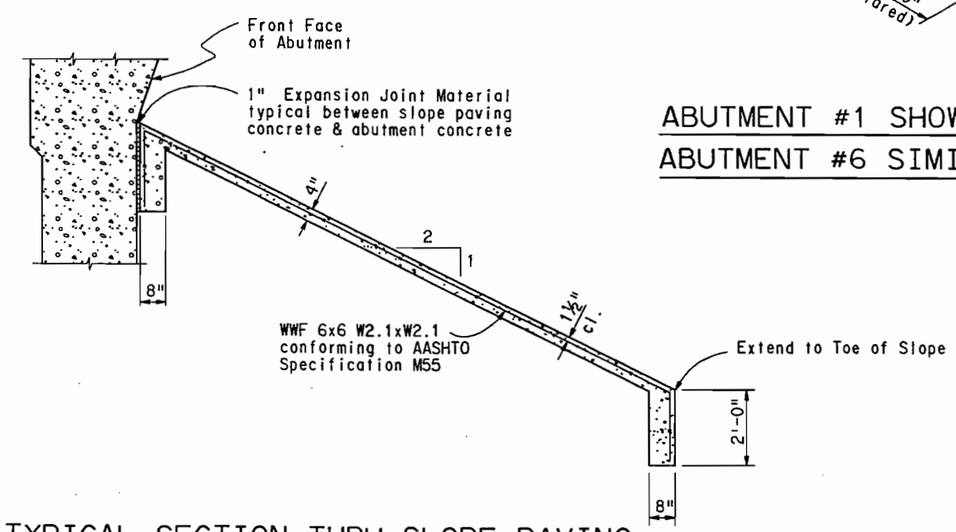

TYPICAL SECTION THRU SLOPE PAVING

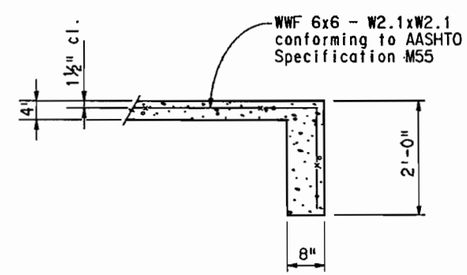

SECTION THRU CUT-OFF WALL
Toe Wall Similiar

ISSUED FOR CONSTRUCTION
7-9-90

Designed By	AEG	2-90	Checked By
Checked By	JHP	3-90	Quantities By
Detailed By	AEG	2-90	Checked By

INITIAL			
AEG	3-90	AEG	3-90
JHP	3-90	JHP	3-90
AEG	2-90	AEG	3-90

$$$$DGNSPEC$$$$$$$$$$$$$$$$
USERNAME
S:\241\SQSLAB\F74\F611SEPAV0113.90W

E-470
Engineer 470 Partnership

DIVISION OF HIGHWAYS
I-25 / 470 INTERCHANGE
RAMP E FLYOVER
SLOPE PAVING DETAILS

Designer A. GRIFFITH		Structure Numbers	F - 17 - JW
Detailer A. GRIFFITH			
Drawing Number	B-41	of	45 Drawings

SLOPE PAVING DETAILS
SFPAV0113.90W

BRIDGE DECK ELEVATIONS

REVISIONS		
A-1 4-2-90	Revised Geometry	J.L.S.

AS CONSTRUCTED — NO REVISIONS ☐ REVISED ☐ VOID ☐

FED. ROAD REGION	DIVISION	PROJ. NO.	SHEET NO.	SHEET TOTALS
VIII	COLORADO	IA06	152	

LONGITUDINAL LINE: LT. DECK EDGE

BENT LINE DESCRIPTION OR FRACTIONAL POINT DESIGNATION	STATION	OFFSET	ELEVATION	COORDINATES FROM LAYOUT LINE EAST	NORTH	BENT LINE LENGTH FROM N-GRID or OFFSET FROM EXTERIOR GIRDER	GIRDER LINE LENGTH
BF ABUT 1	984+18.5690	-20.7500	5905.8837	2178521.2723	628112.7993	177200.3758	604.3265
CL ABUT 1	984+22.1600	-20.7500	5905.9139	2178518.1313	628111.2553	177193.2874	607.8266
F-1	984+27.0600	-20.7500	5905.9540	2178513.8563	628109.1262		612.6023
F-2	984+31.9600	-20.7500	5905.9929	2178509.5942	628106.9716		617.3781
F-3	984+36.8600	-20.7500	5906.0306	2178505.3451	628104.7916		622.1539
F-4	984+41.7600	-20.7500	5906.0670	2178501.1090	628102.5861		626.9297
F-5	984+46.6600	-20.7500	5906.1022	2178496.8863	628100.3553		631.7055
F-6	984+51.5600	-20.7500	5906.1361	2178492.6770	628098.0992		636.4812
F-7	984+56.4600	-20.7500	5906.1688	2178488.4813	628095.8180		641.2570
F-8	984+61.3600	-20.7500	5906.2002	2178484.2993	628093.5118		646.0328
F-9	984+66.2600	-20.7500	5906.2304	2178480.1311	628091.1805		650.8086
F-10	984+71.1600	-20.7500	5906.2593	2178475.9771	628088.8243		655.5844
F-11	984+76.0600	-20.7500	5906.2871	2178471.8372	628086.4433		660.3601
F-12	984+80.9600	-20.7500	5906.3144	2178467.7116	628084.0376		665.1359
F-13	984+85.8600	-20.7500	5906.3418	2178463.6005	628081.6072		669.9117
F-14	984+90.7600	-20.7500	5906.3691	2178459.5040	628079.1522		674.6875
F-15	984+95.6600	-20.7500	5906.3964	2178455.4223	628076.6728		679.4633
F-16	985+00.5600	-20.7500	5906.4238	2178451.3555	628074.1689		684.2390
F-17	985+05.4600	-20.7500	5906.4511	2178447.3038	628071.6408		689.0148
F-18	985+10.3600	-20.7500	5906.4785	2178443.2672	628069.0884		693.7906
F-19	985+15.2600	-20.7500	5906.5058	2178439.2461	628066.5120		698.5664
CL PIER 2	985+20.1600	-20.7500	5906.5332	2178435.2404	628063.9115	143384.9091	703.3422
F-1	985+26.7600	-20.7500	5906.5700	2178429.8697	628060.3710		709.7748
F-2	985+33.3600	-20.7500	5906.6068	2178424.5278	628056.7872		716.2075
F-3	985+39.9600	-20.7500	5906.6437	2178419.2149	628053.1606		722.6402
F-4	985+46.5600	-20.7500	5906.6805	2178413.9315	628049.4912		729.0729
F-5	985+53.1600	-20.7500	5906.7173	2178408.6778	628045.7793		735.5056
F-6	985+59.7600	-20.7500	5906.7542	2178403.4542	628042.0252		741.9383
F-7	985+66.3600	-20.7500	5906.7910	2178398.2611	628038.2291		748.3710
F-8	985+72.9600	-20.7500	5906.8278	2178393.0987	628034.3913		754.8036
F-9	985+79.5600	-20.7500	5906.8647	2178387.9674	628030.5119		761.2363
F-10	985+86.1600	-20.7500	5906.9015	2178382.8676	628026.5913		767.6690
F-11	985+92.7600	-20.7500	5906.9383	2178377.7996	628022.6297		774.1017
F-12	985+99.3600	-20.7500	5906.9751	2178372.7637	628018.6274		780.5344
F-13	986+05.9600	-20.7500	5907.0120	2178367.7602	628014.5845		786.9671
F-14	986+12.5600	-20.7500	5907.0488	2178362.7895	628010.5015		793.3997
F-15	986+19.1600	-20.7500	5907.0856	2178357.8518	628006.3785		799.8324
F-16	986+25.7600	-20.7500	5907.1225	2178352.9476	628002.2159		806.2651
F-17	986+32.3600	-20.7500	5907.1593	2178348.0771	627998.0138		812.6978
F-18	986+38.9600	-20.7500	5907.1961	2178343.2406	627993.7726		819.1305
F-19	986+45.5600	-20.7500	5907.2330	2178338.4385	627989.4926		825.5632
CL PIER 3	986+52.1600	-20.7500	5907.2698	2178333.6711	627985.1739	116162.8250	831.9958
F-1	986+60.1140	-20.7500	5907.3142	2178327.9721	627979.9184		839.7482
F-2	986+68.0681	-20.7500	5907.3586	2178322.3244	627974.6078		847.5006
F-3	986+76.0221	-20.7500	5907.4030	2178316.7286	627969.2425		855.2530
F-4	986+83.9761	-20.7500	5907.4473	2178311.1852	627963.8231		863.0054
F-5	986+91.9302	-20.7500	5907.4917	2178305.6947	627958.3501		870.7578
F-6	986+99.8842	-20.7500	5907.5361	2178300.2577	627952.8240		878.5102
F-7	987+07.8383	-20.7500	5907.5805	2178294.8746	627947.2453		886.2626
F-8	987+15.7923	-20.7500	5907.6249	2178289.5460	627941.6146		894.0150
F-9	987+23.7463	-20.7500	5907.6693	2178284.2723	627935.9323		901.7674
F-10	987+31.7004	-20.7500	5907.7137	2178279.0542	627930.1991		909.5198
F-11	987+39.6544	-20.7500	5907.7581	2178273.8920	627924.4154		917.2722
F-12	987+47.6084	-20.7500	5907.8024	2178268.7862	627918.5819		925.0246
F-13	987+55.5625	-20.7500	5907.8468	2178263.7373	627912.6990		932.7770
F-14	987+63.5165	-20.7500	5907.8912	2178258.7459	627906.7673		940.5294
F-15	987+71.4706	-20.7500	5907.9356	2178253.8124	627900.7874		948.2818
F-16	987+79.4246	-20.7500	5907.9800	2178248.9371	627894.7599		956.0342
F-17	987+87.3786	-20.7500	5908.0244	2178244.1207	627888.6852		963.7866
F-18	987+95.3327	-20.7500	5908.0688	2178239.3636	627882.5641		971.5390
F-19	988+03.2867	-20.7500	5908.1132	2178234.6661	627876.3970		979.2914
CL PIER 4	988+11.2407	-20.7500	5908.1575	2178230.0288	627870.1845	573678.8564	987.0438
F-1	988+17.5867	-20.7500	5908.1930	2178226.3725	627865.1959		993.2288
F-2	988+23.9327	-20.7500	5908.2284	2178222.7549	627860.1791		999.4139
F-3	988+30.2786	-20.7500	5908.2638	2178219.1764	627855.1344		1005.5990
F-4	988+36.6246	-20.7500	5908.2992	2178215.6371	627850.0621		1011.7841
F-5	988+42.9706	-20.7500	5908.3346	2178212.1372	627844.9625		1017.9692
F-6	988+49.3165	-20.7500	5908.3700	2178208.6769	627839.8359		1024.1543
F-7	988+55.6625	-20.7500	5908.4054	2178205.2565	627834.6826		1030.3394
F-8	988+62.0084	-20.7500	5908.4409	2178201.8762	627829.5030		1036.5244
F-9	988+68.3544	-20.7500	5908.4763	2178198.5361	627824.2974		1042.7095
F-10	988+74.7004	-20.7500	5908.5117	2178195.2365	627819.0660		1048.8946
F-11	988+81.0463	-20.7500	5908.5471	2178191.9775	627813.8092		1055.0797
F-12	988+87.3923	-20.7500	5908.5825	2178188.7594	627808.5272		1061.2648
F-13	988+93.7383	-20.7500	5908.6179	2178185.5823	627803.2205		1067.4499
F-14	989+00.0842	-20.7500	5908.6533	2178182.4465	627797.8893		1073.6350
F-15	989+06.4302	-20.7500	5908.6887	2178179.3521	627792.5339		1079.8201
F-16	989+12.7761	-20.7500	5908.7242	2178176.2993	627787.1548		1086.0051
F-17	989+19.1221	-20.7500	5908.7596	2178173.2883	627781.7521		1092.1902
F-18	989+25.4681	-20.7500	5908.7950	2178170.3193	627776.3262		1098.3753
F-19	989+31.8140	-20.7500	5908.8304	2178167.3924	627770.8775		1104.5604
CL PIER 5	989+38.1600	-20.7500	5908.8658	2178164.5079	627765.4062	88182.8606	1110.7455
F-1	989+43.9100	-20.7500	5908.8979	2178161.9309	627760.4296		1116.3497
F-2	989+49.6600	-20.7500	5908.9300	2178159.3890	627755.4350		1121.9540
F-3	989+55.4100	-20.7500	5908.9621	2178156.8822	627750.4227		1127.5582
F-4	989+61.1600	-20.7500	5908.9942	2178154.4108	627745.3929		1133.1624
F-5	989+66.9100	-20.7500	5909.0263	2178151.9747	627740.3458		1138.7666
F-6	989+72.6600	-20.7500	5909.0583	2178149.5741	627735.2818		1144.3709
F-7	989+78.4100	-20.7500	5909.0904	2178147.2091	627730.2010		1149.9751
F-8	989+84.1600	-20.7500	5909.1225	2178144.8799	627725.1038		1155.5793
F-9	989+89.9100	-20.7500	5909.1546	2178142.5866	627719.9902		1161.1836
F-10	989+95.6600	-20.7500	5909.1867	2178140.3292	627714.8608		1166.7878
F-11	990+01.4100	-20.7500	5909.2188	2178138.1080	627709.7155		1172.3920
F-12	990+07.1600	-20.7500	5909.2509	2178135.9229	627704.5548		1177.9963
F-13	990+12.9100	-20.7500	5909.2830	2178133.7742	627699.3789		1183.6005
F-14	990+18.6600	-20.7500	5909.3150	2178131.6618	627694.1880		1189.2047
F-15	990+24.4100	-20.7500	5909.3471	2178129.5860	627688.9824		1194.8090
F-16	990+30.1600	-20.7500	5909.3792	2178127.5468	627683.7624		1200.4132
F-17	990+35.9100	-20.7500	5909.4113	2178125.5443	627678.5281		1206.0174
F-18	990+41.6600	-20.7500	5909.4434	2178123.5786	627673.2800		1211.6217
F-19	990+47.4100	-20.7500	5909.4755	2178121.6499	627668.0181		1217.2259
CL ABUT 6	990+53.1600	-20.7500	5909.5076	2178119.7581	627662.7428	82886.9787	1222.8301
BF ABUT 6	990+56.7510	-20.7500	5909.5276	2178118.5955	627659.4416	82885.7451	1226.3301

LONGITUDINAL LINE: LT. BARRIER FACE

BENT LINE DESCRIPTION OR FRACTIONAL POINT DESIGNATION	STATION	OFFSET	ELEVATION	COORDINATES FROM LAYOUT LINE EAST	NORTH	BENT LINE LENGTH FROM N-GRID or OFFSET FROM EXTERIOR GIRDER	GIRDER LINE LENGTH
BF ABUT 1	984+18.5768	-19.0000	5906.0220	2178520.4968	628114.3682	177198.6258	605.6599
CL ABUT 1	984+22.1600	-19.0000	5906.0521	2178517.3558	628112.8241	177191.5374	609.1599
F-1	984+27.0600	-19.0000	5906.0923	2178513.0715	628110.6904		613.9462
F-2	984+31.9600	-19.0000	5906.1312	2178508.8000	628108.5310		618.7324
F-3	984+36.8600	-19.0000	5906.1688	2178504.5416	628106.3462		623.5187
F-4	984+41.7600	-19.0000	5906.2053	2178500.2962	628104.1359		628.3049
F-5	984+46.6600	-19.0000	5906.2404	2178496.0642	628101.9002		633.0912
F-6	984+51.5600	-19.0000	5906.2744	2178491.8457	628099.6392		637.8774
F-7	984+56.4600	-19.0000	5906.3070	2178487.6408	628097.3530		642.6637
F-8	984+61.3600	-19.0000	5906.3385	2178483.4496	628095.0416		647.4500
F-9	984+66.2600	-19.0000	5906.3687	2178479.2723	628092.7053		652.2362
F-10	984+71.1600	-19.0000	5906.3976	2178475.1091	628090.3439		657.0225
F-11	984+76.0600	-19.0000	5906.4253	2178470.9601	628087.9577		661.8087
F-12	984+80.9600	-19.0000	5906.4527	2178466.8255	628085.5467		666.5950
F-13	984+85.8600	-19.0000	5906.4800	2178462.7054	628083.1109		671.3812
F-14	984+90.7600	-19.0000	5906.5074	2178458.5999	628080.6506		676.1675
F-15	984+95.6600	-19.0000	5906.5347	2178454.5093	628078.1657		680.9538
F-16	985+00.5600	-19.0000	5906.5620	2178450.4335	628075.6564		685.7400
F-17	985+05.4600	-19.0000	5906.5894	2178446.3729	628073.1227		690.5263
F-18	985+10.3600	-19.0000	5906.6167	2178442.3275	628070.5647		695.3125
F-19	985+15.2600	-19.0000	5906.6441	2178438.2975	628067.9826		700.0988
CL PIER 2	985+20.1600	-19.0000	5906.6714	2178434.2831	628065.3764	143383.1591	704.8850
F-1	985+26.7600	-19.0000	5906.7083	2178428.9006	628061.8281		711.3318
F-2	985+33.3600	-19.0000	5906.7451	2178423.5470	628058.2366		717.7786
F-3	985+39.9600	-19.0000	5906.7819	2178418.2225	628054.6020		724.2254
F-4	985+46.5600	-19.0000	5906.8187	2178412.9274	628050.9245		730.6722
F-5	985+53.1600	-19.0000	5906.8556	2178407.6622	628047.2045		737.1190
F-6	985+59.7600	-19.0000	5906.8924	2178402.4272	628043.4122		743.5658
F-7	985+66.3600	-19.0000	5906.9292	2178397.2226	628039.6377		750.0126
F-8	985+72.9600	-19.0000	5906.9661	2178392.0490	628035.7915		756.4594
F-9	985+79.5600	-19.0000	5907.0029	2178386.9064	628031.9036		762.9062
F-10	985+86.1600	-19.0000	5907.0397	2178381.7954	628027.9744		769.3530
F-11	985+92.7600	-19.0000	5907.0766	2178376.7163	628024.0041		775.7998
F-12	985+99.3600	-19.0000	5907.1134	2178371.6693	628019.9930		782.2466
F-13	986+05.9600	-19.0000	5907.1502	2178366.6549	628015.9413		788.6934
F-14	986+12.5600	-19.0000	5907.1871	2178361.6732	628011.8493		795.1402
F-15	986+19.1600	-19.0000	5907.2239	2178356.7248	628007.7173		801.5870
F-16	986+25.7600	-19.0000	5907.2607	2178351.8098	628003.5455		808.0338
F-17	986+32.3600	-19.0000	5907.2976	2178346.9286	627999.3342		814.4806
F-18	986+38.9600	-19.0000	5907.3344	2178342.0815	627995.0837		820.9274
F-19	986+45.5600	-19.0000	5907.3712	2178337.2689	627990.7943		827.3741
CL PIER 3	986+52.1600	-19.0000	5907.4080	2178332.4910	627986.4661	116161.0750	833.8209
F-1	986+60.0223	-19.0000	5907.4519	2178326.8450	627981.2601		841.5008
F-2	986+67.8847	-19.0000	5907.4958	2178321.2493	627976.0001		849.1806
F-3	986+75.7470	-19.0000	5907.5397	2178315.7044	627970.6866		856.8605
F-4	986+83.6094	-19.0000	5907.5835	2178310.2108	627965.3201		864.5403
F-5	986+91.4717	-19.0000	5907.6274	2178304.7690	627959.9011		872.2201
F-6	986+99.3341	-19.0000	5907.6713	2178299.3794	627954.4300		879.9000
F-7	987+07.1964	-19.0000	5907.7152	2178294.0427	627948.9074		887.5798
F-8	987+15.0587	-19.0000	5907.7591	2178288.7593	627943.3338		895.2596
F-9	987+22.9211	-19.0000	5907.8029	2178283.5297	627937.7098		902.9395
F-10	987+30.7834	-19.0000	5907.8468	2178278.3543	627932.0357		910.6193
F-11	987+38.6458	-19.0000	5907.8907	2178273.2336	627926.3122		918.2991
F-12	987+46.5081	-19.0000	5907.9346	2178268.1682	627920.5398		925.9790
F-13	987+54.3705	-19.0000	5907.9784	2178263.1585	627914.7189		933.6588
F-14	987+62.2328	-19.0000	5908.0223	2178258.2049	627908.8503		941.3386
F-15	987+70.0951	-19.0000	5908.0662	2178253.3079	627902.9343		949.0185
F-16	987+77.9575	-19.0000	5908.1101	2178248.4679	627896.9716		956.6983
F-17	987+85.8198	-19.0000	5908.1539	2178243.6855	627890.9626		964.3781
F-18	987+93.6822	-19.0000	5908.1978	2178238.9610	627884.9080		972.0580
F-19	988+01.5445	-19.0000	5908.2417	2178234.2949	627878.8082		979.7378
CL PIER 4	988+09.4069	-19.0000	5908.2856	2178229.6875	627872.6640	573676.3535	987.4177
F-1	988+15.8445	-19.0000	5908.3215	2178225.9592	627867.6003		993.7059
F-2	988+22.2822	-19.0000	5908.3574	2178222.2707	627862.5075		999.9941
F-3	988+28.7198	-19.0000	5908.3933	2178218.6225	627857.3858		1006.2823
F-4	988+35.1575	-19.0000	5908.4293	2178215.0146	627852.2356		1012.5705
F-5	988+41.5951	-19.0000	5908.4652	2178211.4473	627847.0571		1018.8588
F-6	988+48.0328	-19.0000	5908.5011	2178207.9209	627841.8508		1025.1470
F-7	988+54.4705	-19.0000	5908.5370	2178204.4356	627836.6169		1031.4352
F-8	988+60.9081	-19.0000	5908.5730	2178200.9915	627831.3557		1037.7234
F-9	988+67.3458	-19.0000	5908.6089	2178197.5889	627826.0676		1044.0116
F-10	988+73.7834	-19.0000	5908.6448	2178194.2280	627820.7530		1050.2999
F-11	988+80.2211	-19.0000	5908.6807	2178190.9090	627815.4120		1056.5881
F-12	988+86.6587	-19.0000	5908.7167	2178187.6321	627810.0451		1062.8763
F-13	988+93.0964	-19.0000	5908.7526	2178184.3975	627804.6526		1069.1645
F-14	988+99.5341	-19.0000	5908.7885	2178181.2054	627799.2349		1075.4527
F-15	989+05.9717	-19.0000	5908.8244	2178178.0561	627793.7921		1081.7410
F-16	989+12.4094	-19.0000	5908.8604	2178174.9496	627788.3248		1088.0292
F-17	989+18.8470	-19.0000	5908.8963	2178171.8863	627782.8333		1094.3174
F-18	989+25.2847	-19.0000	5908.9322	2178168.8662	627777.3178		1100.6056
F-19	989+31.7223	-19.0000	5908.9681	2178165.8896	627771.7787		1106.8938
CL PIER 5	989+38.1600	-19.0000	5909.0041	2178162.9567	627766.2164	88181.1106	1113.1821
F-1	989+43.9100	-19.0000	5909.0362	2178160.3741	627761.2288		1118.7986
F-2	989+49.6600	-19.0000	5909.0682	2178157.8266	627756.2233		1124.4151
F-3	989+55.4100	-19.0000	5909.1003	2178155.3143	627751.2000		1130.0316
F-4	989+61.1600	-19.0000	5909.1324	2178152.8374	627746.1591		1135.6482
F-5	989+66.9100	-19.0000	5909.1645	2178150.3960	627741.1010		1141.2647
F-6	989+72.6600	-19.0000	5909.1966	2178147.9901	627736.0259		1146.8812
F-7	989+78.4100	-19.0000	5909.2287	2178145.6200	627730.9339		1152.4977
F-8	989+84.1600	-19.0000	5909.2608	2178143.2857	627725.8255		1158.1143
F-9	989+89.9100	-19.0000	5909.2929	2178140.9873	627720.7008		1163.7308
F-10	989+95.6600	-19.0000	5909.3249	2178138.7250	627715.5600		1169.3473
F-11	990+01.4100	-19.0000	5909.3570	2178136.4989	627710.4035		1174.9638
F-12	990+07.1600	-19.0000	5909.3891	2178134.3090	627705.2315		1180.5804
F-13	990+12.9100	-19.0000	5909.4212	2178132.1556	627700.0442		1186.1969
F-14	990+18.6600	-19.0000	5909.4533	2178130.0386	627694.8420		1191.8134
F-15	990+24.4100	-19.0000	5909.4854	2178127.9582	627689.6249		1197.4299
F-16	990+30.1600	-19.0000	5909.5175	2178125.9145	627684.3934		1203.0465
F-17	990+35.9100	-19.0000	5909.5496	2178123.9076	627679.1477		1208.6630
F-18	990+41.6600	-19.0000	5909.5816	2178121.9377	627673.8880		1214.2795
F-19	990+47.4100	-19.0000	5909.6137	2178120.0047	627668.6146		1219.8961
CL ABUT 6	990+53.1600	-19.0000	5909.6458	2178118.1088	627663.3277	82885.2287	1225.5126
BF ABUT 6	990+56.7432	-19.0000	5909.6658	2178116.9462	627660.0265	82683.9951	1229.0126

LONGITUDINAL LINE: WEB W.P. 1

BENT LINE DESCRIPTION OR FRACTIONAL POINT DESIGNATION	STATION	OFFSET	ELEVATION	COORDINATES FROM LAYOUT LINE EAST	NORTH	BENT LINE LENGTH FROM N-GRID or OFFSET FROM EXTERIOR GIRDER	GIRDER LINE LENGTH
BF ABUT 1	984+18.5870	-16.7171	5906.2024	2178519.4852	628116.4147	177196.3429	607.3993
CL ABUT 1	984+22.1600	-16.7171	5906.2325	2178516.3442	628114.8706	177189.2545	610.8993
F-1	984+27.0600	-16.7171	5906.2726	2178512.0477	628112.7308		615.6992
F-2	984+31.9600	-16.7171	5906.3115	2178507.7640	628110.5653		620.4991
F-3	984+36.8600	-16.7171	5906.3492	2178503.4934	628108.3742		625.2991
F-4	984+41.7600	-16.7171	5906.3856	2178499.2359	628106.1576		630.0990
F-5	984+46.6600	-16.7171	5906.4208	2178494.9918	628103.9155		634.8989
F-6	984+51.5600	-16.7171	5906.4547	2178490.7612	628101.6481		639.6988
F-7	984+56.4600	-16.7171	5906.4874	2178486.5443	628099.3553		644.4987
F-8	984+61.3600	-16.7171	5906.5188	2178482.3412	628097.0374		649.2987
F-9	984+66.2600	-16.7171	5906.5490	2178478.1520	628094.6944		654.0986
F-10	984+71.1600	-16.7171	5906.5779	2178473.9769	628092.3263		658.8985
F-11	984+76.0600	-16.7171	5906.6057	2178469.8161	628089.9332		663.6984
F-12	984+80.9600	-16.7171	5906.6330	2178465.6696	628087.5153		668.4984
F-13	984+85.8600	-16.7171	5906.6604	2178461.5377	628085.0726		673.2983
F.S. 1	984+90.5558	-16.7171	5906.6866	2178457.5918	628082.7086	151932.5509	677.8982
F-14	984+90.7600	-16.7171	5906.6877	2178457.4206	628082.6052		678.0982
F-15	984+95.6600	-16.7171	5906.7150	2178453.3182	628080.1133		682.8981
F-16	985+00.5600	-16.7171	5906.7424	2178449.2309	628077.5968		687.6981
F-17	985+05.4600	-16.7171	5906.7697	2178445.1586	628075.0559		692.4980
F-18	985+10.3600	-16.7171	5906.7971	2178441.1017	628072.4906		697.2979
F-19	985+15.2600	-16.7171	5906.8244	2178437.0602	628069.9011		702.0978
CL PIER 2	985+20.1600	-16.7171	5906.8518	2178433.0343	628067.2875	143380.8762	706.8978
F-1	985+26.7600	-16.7171	5906.8886	2178427.6365	628063.7291		713.3630
F-2	985+33.3600	-16.7171	5906.9254	2178422.2675	628060.1272		719.8282
F-3	985+39.9600	-16.7171	5906.9623	2178416.9278	628056.4822		726.2934
F-4	985+46.5600	-16.7171	5906.9991	2178411.6177	628052.7943		732.7586
F.S. 2	985+49.7642	-16.7171	5907.0170	2178409.0504	628050.9885	135905.3847	735.8973
F-5	985+53.1600	-16.7171	5907.0359	2178406.3374	628049.0637		739.2238
F-6	985+59.7600	-16.7171	5907.0728	2178401.0874	628045.2306		745.6880
F-7	985+66.3600	-16.7171	5907.1096	2178395.8680	628041.4753		752.1542
F-8	985+72.9600	-16.7171	5907.1464	2178390.6796	628037.6180		758.6154
F-9	985+79.5600	-16.7171	5907.1833	2178385.5224	628033.7131		755.0846
F-10	985+86.1600	-16.7171	5907.2201	2178380.3968	628029.7786		771.5498
F-11	985+92.7600	-16.7171	5907.2569	2178375.3031	628025.7970		778.0150
F-12	985+99.3600	-16.7171	5907.2937	2178370.2417	628021.7744		784.4802
F-13	986+05.9600	-16.7171	5907.3306	2178365.2130	628017.7112		790.9454
F-14	986+12.5600	-16.7171	5907.3674	2178360.2171	628013.6075		797.4106
F.S. 3	986+16.4308	-16.7171	5907.3890	2178357.3026	628011.1821	122151.0802	801.2023
F-15	986+19.1600	-16.7171	5907.4042	2178355.2545	628009.4637		803.8758
F-16	986+25.7600	-16.7171	5907.4411	2178350.3255	628005.2800		810.3410
F-17	986+32.3600	-16.7171	5907.4779	2178345.4304	628001.0567		816.8062
F-18	986+38.9600	-16.7171	5907.5147	2178340.5694	627996.7940		823.2714
F-19	986+45.5600	-16.7171	5907.5516	2178335.7431	627992.4923		829.7366
CL PIER 3	986+52.1600	-16.7171	5907.5884	2178330.9515	627988.1519	116158.7921	836.2012
F-1	986+59.9036	-16.7171	5907.6316	2178325.3745	627983.0102		843.7873
F-2	986+67.6473	-16.7171	5907.6748	2178319.8465	627977.8161		851.3728
F-3	986+75.3909	-16.7171	5907.7180	2178314.3678	627972.5598		858.9583
F-4	986+83.1346	-16.7171	5907.7612	2178308.9389	627967.2720		866.5438
F.S. 4	986+85.9256	-16.7171	5907.7768	2178306.9945	627965.3499	111196.3170	869.2778
F-5	986+90.8782	-16.7171	5907.8045	2178303.5605	627961.9230		874.1292
F-6	986+98.6218	-16.7171	5907.8477	2178298.2329	627956.5234		881.7147
F-7	987+06.3655	-16.7171	5907.8909	2178292.9566	627951.0737		889.3002
F-8	987+14.1091	-16.7171	5907.9341	2178287.7321	627945.5742		896.8857
F-9	987+21.8528	-16.7171	5907.9773	2178282.5598	627940.0256		904.4712
F-10	987+29.5964	-16.7171	5908.0205	2178277.4403	627934.4283		912.0567
F-11	987+37.3400	-16.7171	5908.0637	2178272.3740	627928.7828		919.6422
F-12	987+45.0837	-16.7171	5908.1070	2178267.3613	627923.0897		927.2276
F-13	987+52.8273	-16.7171	5908.1502	2178262.4027	627917.3493		934.8131
F-14	987+60.5710	-16.7171	5908.1934	2178257.4986	627911.5624		942.3986
F-15	987+68.3146	-16.7171	5908.2366	2178252.6495	627905.7292		949.9841
F.S. 6	987+68.4412	-16.7171	5908.2373	2178252.5707	627905.6335	101350.2363	950.1081
F-16	987+76.0582	-16.7171	5908.2798	2178247.8558	627899.8505		957.5696
F-17	987+83.8019	-16.7171	5908.3230	2178243.1179	627893.9267		965.1551
F-18	987+91.5455	-16.7171	5908.3662	2178238.4363	627887.9583		972.7405
F-19	987+99.2892	-16.7171	5908.4094	2178233.8113	627881.9459		980.3260
CL PIER 4	988+07.0328	-16.7171	5908.4527	2178229.2435	627875.8900	573673.0971	987.9115
F-1	988+13.5892	-16.7171	5908.4892	2178225.4209	627870.7291		994.3340
F-2	988+20.1455	-16.7171	5908.5258	2178221.6398	627865.5376		1000.7564
F-3	988+26.7019	-16.7171	5908.5624	2178217.9004	627860.3161		1007.1789
F-4	988+33.2582	-16.7171	5908.5990	2178214.2029	627855.0648		1013.6013
F.S. 8	988+34.7954	-16.7171	5908.6076	2178213.3421	627853.8293	95262.8694	1015.1071
F-5	988+39.8146	-16.7171	5908.6356	2178210.5476	627849.7840		1020.0238
F-6	988+46.3710	-16.7171	5908.6722	2178206.9348	627844.4741		1026.4462
F-7	988+52.9273	-16.7171	5908.7088	2178203.3645	627839.1354		1032.8687
F-8	988+59.4837	-16.7171	5908.7454	2178199.8372	627833.7683		1039.2912
F-9	988+66.0400	-16.7171	5908.7819	2178196.3530	627828.3732		1045.7136
F-10	988+72.5964	-16.7171	5908.8185	2178192.9121	627822.9503		1052.1361
F-11	988+79.1528	-16.7171	5908.8551	2178189.5147	627817.5000		1058.5585
F-12	988+85.7091	-16.7171	5908.8917	2178186.1611	627812.0227		1064.9810
F-13	988+92.2655	-16.7171	5908.9283	2178182.8515	627806.5187		1071.4034
F-14	988+98.8218	-16.7171	5908.9649	2178179.5861	627800.9883		1077.8259
F.S. 9	989+04.4725	-16.7171	5908.9964	2178176.8074	627796.2011	90211.6983	1083.3611
F-15	989+05.3782	-16.7171	5909.0015	2178176.3650	627795.4320		1084.2483
F-16	989+11.9346	-16.7171	5909.0381	2178173.1886	627789.8500		1090.6708
F-17	989+18.4909	-16.7171	5909.0747	2178170.0570	627784.2428		1097.0932
F-18	989+25.0473	-16.7171	5909.1112	2178166.9705	627778.6107		1103.5157
F-19	989+31.6036	-16.7171	5909.1478	2178163.9291	627772.9541		1109.9382
CL PIER 5	989+38.1600	-16.7171	5909.1844	2178160.9331	627767.2732	88178.8277	1116.3606
F-1	989+43.9100	-16.7171	5909.2165	2178158.3432	627762.2714		1121.9932
F-2	989+49.6600	-16.7171	5909.2486	2178155.7884	627757.2516		1127.6257
F-3	989+55.4100	-16.7171	5909.2807	2178153.2690	627752.2139		1133.2583
F-4	989+61.1600	-16.7171	5909.3128	2178150.7850	627747.1587		1138.8909
F-5	989+66.9100	-16.7171	5909.3449	2178148.3366	627742.0861		1144.5234
F-6	989+72.6600	-16.7171	5909.3769	2178145.9239	627736.9965		1150.1560
F.S. 10	989+74.9100	-16.7171	5909.3895	2178144.9895	627735.0003	86226.4690	1152.3600
F-7	989+78.4100	-16.7171	5909.4090	2178143.5470	627731.8900		1155.7885
F-8	989+84.1600	-16.7171	5909.4411	2178141.2060	627726.7670		1161.4211
F-9	989+89.9100	-16.7171	5909.4732	2178138.9011	627721.6276		1167.0537
F-10	989+95.6600	-16.7171	5909.5053	2178136.6323	627716.4722		1172.6862
F-11	990+01.4100	-16.7171	5909.5374	2178134.3998	627711.3010		1178.3188
F-12	990+07.1600	-16.7171	5909.5695	2178132.2037	627706.1142		1183.9514
F-13	990+12.9100	-16.7171	5909.6016	2178130.0441	627700.9121		1189.5839
F-14	990+18.6600	-16.7171	5909.6336	2178127.9210	627695.6950		1195.2165
F-15	990+24.4100	-16.7171	5909.6657	2178125.8347	627690.4631		1200.8491
F-16	990+30.1600	-16.7171	5909.6978	2178123.7852	627685.2166		1206.4816
F-17	990+35.9100	-16.7171	5909.7299	2178121.7726	627679.9559		1212.1142
F-18	990+41.6600	-16.7171	5909.7620	2178119.7970	627674.6812		1217.7467
F-19	990+47.4100	-16.7171	5909.7941	2178117.8585	627669.3928		1223.3793
CL ABUT 6	990+53.1600	-16.7171	5909.8262	2178115.9572	627664.0908	82882.9458	1229.0119
BF ABUT 6	990+56.7330	-16.7171	5909.8461	2178114.7945	627660.7896	82881.7122	1232.5119

LONGITUDINAL LINE: WEB W.P. 2

BENT LINE DESCRIPTION OR FRACTIONAL POINT DESIGNATION	STATION	OFFSET	ELEVATION	COORDINATES FROM LAYOUT LINE EAST	NORTH	BENT LINE LENGTH FROM N-GRID or OFFSET FROM EXTERIOR GIRDER	GIRDER LINE LENGTH
BF ABUT 1	984+18.6200	-9.2401	5906.7934	2178516.1720	628123.1176	177188.8658	613.0961
CL ABUT 1	984+22.1600	-9.2401	5906.8232	2178513.0310	628121.5735	177181.7775	616.5961
F-1	984+27.0600	-9.2401	5906.8633	2178508.6944	628119.4137		621.4408
F-2	984+31.9600	-9.2401	5906.9022	2178504.3708	628117.2280		626.2855
F-3	984+36.8600	-9.2401	5906.9399	2178500.0603	628115.0165		631.1302
F-4	984+41.7600	-9.2401	5906.9763	2178495.7632	628112.7792		635.9749
F-5	984+46.6600	-9.2401	5907.0115	2178491.4795	628110.5162		640.8195
F-6	984+51.5600	-9.2401	5907.0454	2178487.2095	628108.2276		645.6642
F-7	984+56.4600	-9.2401	5907.0781	2178482.9532	628105.9135		650.5089

ISSUED FOR CONSTRUCTION

NOTE: ELEVATIONS ARE AT TOP OF CONCRETE DECK 0.1667 FEET BELOW FINISHED GRADE.

7-9-90

E-470
Engineer 470 Partnership

DIVISION OF HIGHWAYS

I-25/470 INTERCHANGE
RAMP E FLYOVER
BRIDGE DECK ELEVATIONS

Designer	J. Stapleton	Structure Numbers	F-17-JW
Detailer	D. Kurschinski		

Drawing Number B-42 of 45 Drawings

Revision Dates | (Preliminary Stage Only)

DESIGNED BY / CHECKED BY / DETAILED BY / QUANTITIES BY / CHECKED BY / DATE / INITIAL

ISSUED FOR CONSTRUCTION 7-9-90

BRIDGE DECK ELEVATIONS

	REVISIONS	
A-1 4-2-90	Revised Geometry	J.L.S.

AS CONSTRUCTED: NO REVISIONS ☐ REVISED ☐ VOID ☐

FED. ROAD REGION	DIVISION	PROJ. NO.	SHEET NO.	SHEET TOTALS
VIII	COLORADO	1A06	153	

40 41

BENT LINE DESCRIPTION OR FRACTIONAL POINT DESIGNATION	STATION	OFFSET	ELEVATION	COORDINATES FROM LAYOUT LINE EAST	COORDINATES FROM LAYOUT LINE NORTH	BENT LINE LENGTH FROM N-GRID or OFFSET FROM EXTERIOR GIRDER	GIRDER LINE LENGTH
F-8	984+61.3600	-9.2401	5907.1095	2178478.7109	628103.5739		655.3536
F-9	984+66.2600	-9.2401	5907.1397	2178474.4826	628101.2090		660.1983
F-10	984+71.1600	-9.2401	5907.1686	2178470.2686	628098.8189		665.0430
F-11	984+76.0600	-9.2401	5907.1964	2178466.0690	628096.4035		669.8877
F-12	984+80.9600	-9.2401	5907.2237	2178461.8838	628093.9631		674.7323
F-13	984+85.8600	-9.2401	5907.2510	2178457.7134	628091.4976		679.5770
F.S. 1	984+90.5558	-9.2401	5907.2772	2178453.7307	628089.1115	151925.0739	684.2198
F-14	984+90.7600	-9.2401	5907.2784	2178453.5578	628089.0072		684.4217
F-15	984+95.6600	-9.2401	5907.3057	2178449.4172	628086.4920		689.2664
F-16	985+00.5600	-9.2401	5907.3331	2178445.2918	628083.9520		694.1111
F-17	985+05.4600	-9.2401	5907.3604	2178441.1816	628081.3874		698.9558
F-18	985+10.3600	-9.2401	5907.3878	2178437.0868	628078.7982		703.8004
F-19	985+15.2600	-9.2401	5907.4151	2178433.0076	628076.1846		708.6451
CL PIER 2	985+20.1600	-9.2401	5907.4425	2178428.9442	628073.5466	143373.3992	713.4898
F-1	985+26.7600	-9.2401	5907.4793	2178423.4960	628069.9550		720.0153
F-2	985+33.3600	-9.2401	5907.5161	2178418.0770	628066.3196		726.5408
F-3	985+39.9600	-9.2401	5907.5529	2178412.6875	628062.6406		733.0663
F-4	985+46.5600	-9.2401	5907.5898	2178407.3278	628058.9183		739.5918
F.S. 2	985+49.7642	-9.2401	5907.6077	2178404.7367	628057.0956	135897.9077	742.7598
F-5	985+53.1600	-9.2401	5907.6266	2178401.9983	628055.1528		746.1173
F-6	985+59.7600	-9.2401	5907.6634	2178396.6994	628051.3446		752.6428
F-7	985+66.3600	-9.2401	5907.7003	2178391.4313	628047.4937		759.1683
F-8	985+72.9600	-9.2401	5907.7371	2178386.1945	628043.6005		765.6938
F-9	985+79.5600	-9.2401	5907.7739	2178380.9892	628039.6651		772.2193
F-10	985+86.1600	-9.2401	5907.8108	2178375.8158	628035.6880		778.7447
F-11	985+92.7600	-9.2401	5907.8476	2178370.6746	628031.6692		785.2702
F-12	985+99.3600	-9.2401	5907.8844	2178365.5661	628027.6091		791.7957
F-13	986+05.9600	-9.2401	5907.9213	2178360.4904	628023.5080		798.3212
F-14	986+12.5600	-9.2401	5907.9581	2178355.4480	628019.3660		804.8467
F.S. 3	986+16.4308	-9.2401	5907.9797	2178352.5062	628016.9180	122143.6032	808.6738
F-15	986+19.1600	-9.2401	5907.9949	2178350.4391	628015.1836		811.3722
F-16	986+25.7600	-9.2401	5908.0318	2178345.4641	628010.9609		817.8977
F-17	986+32.3600	-9.2401	5908.0686	2178340.5233	628006.6982		824.4232
F-18	986+38.9600	-9.2401	5908.1054	2178335.6171	628002.3958		830.9487
F-19	986+45.5600	-9.2401	5908.1422	2178330.7457	627998.0540		837.4742
CL PIER 3	986+52.1600	-9.2401	5908.1791	2178325.9094	627993.6730	116151.3151	843.9997
F-1	986+59.5219	-9.2401	5908.2202	2178320.5568	627988.7405		851.2785
F-2	986+66.8838	-9.2401	5908.2612	2178315.2487	627983.7600		858.5573
F-3	986+74.2457	-9.2401	5908.3023	2178309.9857	627978.7320		865.8361
F-4	986+81.6077	-9.2401	5908.3434	2178304.7680	627973.6569		873.1149
F.S. 4	986+85.9256	-9.2401	5908.3675	2178301.7291	627970.6584	111188.8400	877.3841
F-5	986+88.9696	-9.2401	5908.3845	2178299.5963	627968.5350		880.3937
F-6	986+96.3315	-9.2401	5908.4256	2178294.4708	627963.3669		887.6725
F-7	987+03.6934	-9.2401	5908.4667	2178289.3920	627958.1528		894.9513
F-8	987+11.0553	-9.2401	5908.5077	2178284.3603	627952.8933		902.2301
F-9	987+18.4172	-9.2401	5908.5488	2178279.3761	627947.5887		909.5089
F-10	987+25.7791	-9.2401	5908.5899	2178274.4398	627942.2395		916.7877
F-11	987+33.1411	-9.2401	5908.6310	2178269.5518	627936.8461		924.0666
F-12	987+40.5030	-9.2401	5908.6721	2178264.7126	627931.4090		931.3454
F-13	987+47.8649	-9.2401	5908.7132	2178259.9224	627925.9286		938.6242
F-14	987+55.2268	-9.2401	5908.7542	2178255.1817	627920.4053		945.9030
F-15	987+62.5887	-9.2401	5908.7953	2178250.4909	627914.8396		953.1818
F.S. 6	987+68.4412	-9.2401	5908.8280	2178246.7977	627910.3851	101342.7593	958.9682
F-16	987+69.9506	-9.2401	5908.8364	2178245.8503	627909.2320		960.4606
F-17	987+77.3126	-9.2401	5908.8775	2178241.2604	627903.5828		967.7394
F-18	987+84.6745	-9.2401	5908.9186	2178236.7215	627897.8926		975.0182
F-19	987+92.0364	-9.2401	5908.9597	2178232.2339	627892.1618		982.2970
CL PIER 4	987+99.3983	-9.2401	5909.0007	2178227.7980	627886.3908	573662.4973	989.5758
F-1	988+06.3364	-9.2401	5909.0395	2178223.6652	627880.9158		996.4356
F-2	988+13.2745	-9.2401	5909.0782	2178219.5789	627875.4059		1003.2953
F-3	988+20.2126	-9.2401	5909.1169	2178215.5395	627869.8616		1010.1551
F-4	988+27.1506	-9.2401	5909.1556	2178211.5473	627864.2833		1017.0149
F-5	988+34.0887	-9.2401	5909.1943	2178207.6024	627858.6713		1023.8746
F.S. 8	988+34.7954	-9.2401	5909.1983	2178207.2033	627858.0978	95255.3924	1024.5733
F-6	988+41.0268	-9.2401	5909.2330	2178203.7053	627853.0261		1030.7344
F-7	988+47.9649	-9.2401	5909.2718	2178199.8562	627847.3481		1037.5941
F-8	988+54.9030	-9.2401	5909.3105	2178196.0553	627841.6376		1044.4539
F-9	988+61.8411	-9.2401	5909.3492	2178192.3030	627835.8951		1051.3137
F-10	988+68.7791	-9.2401	5909.3879	2178188.5994	627830.1210		1058.1734
F-11	988+75.7172	-9.2401	5909.4266	2178184.9450	627824.3158		1065.0332
F-12	988+82.6553	-9.2401	5909.4654	2178181.3399	627818.4797		1071.8930
F-13	988+89.5934	-9.2401	5909.5041	2178177.7844	627812.6133		1078.7527
F-14	988+96.5315	-9.2401	5909.5428	2178174.2787	627806.7170		1085.6125
F-15	989+03.4696	-9.2401	5909.5815	2178170.8232	627800.7912		1092.4722
F.S. 9	989+04.4725	-9.2401	5909.5871	2178170.3278	627799.9322	90204.2213	1093.4638
F-16	989+10.4077	-9.2401	5909.6202	2178167.4180	627794.8363		1099.3320
F-17	989+17.3457	-9.2401	5909.6589	2178164.0634	627788.8528		1106.1918
F-18	989+24.2838	-9.2401	5909.6977	2178160.7596	627782.8410		1113.0515
F-19	989+31.2219	-9.2401	5909.7364	2178157.5070	627776.8015		1119.9113
CL PIER 5	989+38.1600	-9.2401	5909.7751	2178154.3056	627770.7346	88171.3507	1126.7710
F-1	989+43.9100	-9.2401	5909.8072	2178151.6915	627765.6862		1132.4561
F-2	989+49.6600	-9.2401	5909.8393	2178149.1129	627760.6195		1138.1412
F-3	989+55.4100	-9.2401	5909.8714	2178146.5700	627755.5349		1143.8263
F-4	989+61.1600	-9.2401	5909.9034	2178144.0628	627750.4325		1149.5114
F-5	989+66.9100	-9.2401	5909.9355	2178141.5916	627745.3126		1155.1965
F-6	989+72.6600	-9.2401	5909.9676	2178139.1563	627740.1755		1160.8816
F.S. 10	989+74.9100	-9.2401	5909.9802	2178138.2133	627738.1607	86218.9920	1163.1062
F-7	989+78.4100	-9.2401	5909.9997	2178136.7573	627735.0214		1166.5667
F-8	989+84.1600	-9.2401	5910.0318	2178134.3945	627729.8506		1172.2518
F-9	989+89.9100	-9.2401	5910.0639	2178132.0681	627724.6634		1177.9368
F-10	989+95.6600	-9.2401	5910.0960	2178129.7781	627719.4599		1183.6219
F-11	990+01.4100	-9.2401	5910.1281	2178127.5248	627714.2404		1189.3070
F-12	990+07.1600	-9.2401	5910.1602	2178125.3082	627709.0053		1194.9921
F-13	990+12.9100	-9.2401	5910.1922	2178123.1285	627703.7547		1200.6772
F-14	990+18.6600	-9.2401	5910.2243	2178120.9857	627698.4889		1206.3623
F-15	990+24.4100	-9.2401	5910.2564	2178118.8799	627693.2082		1212.0474
F-16	990+30.1600	-9.2401	5910.2885	2178116.8112	627687.9128		1217.7325
F-17	990+35.9100	-9.2401	5910.3206	2178114.7799	627682.6031		1223.4176
F-18	990+41.6600	-9.2401	5910.3527	2178112.7858	627677.2791		1229.1026
F-19	990+47.4100	-9.2401	5910.3848	2178110.8293	627671.9414		1234.7877
CL ABUT 6	990+53.1600	-9.2401	5910.4169	2178108.9102	627666.5900	82875.4688	1240.4728
BF ABUT 6	990+56.7000	-9.2401	5910.4366	2178107.7475	627663.2887	82874.2351	1243.9728

LONGITUDINAL LINE: WEB W.P. 3

BENT LINE DESCRIPTION OR FRACTIONAL POINT DESIGNATION	STATION	OFFSET	ELEVATION	COORDINATES FROM LAYOUT LINE EAST	COORDINATES FROM LAYOUT LINE NORTH	BENT LINE LENGTH FROM N-GRID or OFFSET FROM EXTERIOR GIRDER	GIRDER LINE LENGTH
BF ABUT 1	984+18.6524	-1.7631	5907.3843	2178512.8587	628129.8205	177181.3887	618.7930
CL ABUT 1	984+22.1600	-1.7631	5907.4138	2178509.7178	628128.2763	177174.3005	622.2930
F-1	984+27.0600	-1.7631	5907.4540	2178505.3411	628126.0966		627.1824
F-2	984+31.9600	-1.7631	5907.4929	2178500.9775	628123.8907		632.0719
F-3	984+36.8600	-1.7631	5907.5306	2178496.6272	628121.6587		636.9613
F-4	984+41.7600	-1.7631	5907.5670	2178492.2904	628119.4008		641.8507
F-5	984+46.6600	-1.7631	5907.6021	2178487.9672	628117.1169		646.7402
F-6	984+51.5600	-1.7631	5907.6361	2178483.6577	628114.8071		651.6296
F-7	984+56.4600	-1.7631	5907.6687	2178479.3621	628112.4717		656.5191
F-8	984+61.3600	-1.7631	5907.7002	2178475.0806	628110.1105		661.4085
F-9	984+66.2600	-1.7631	5907.7304	2178470.8132	628107.7237		666.2980
F-10	984+71.1600	-1.7631	5907.7593	2178466.5603	628105.3115		671.1874
F-11	984+76.0600	-1.7631	5907.7870	2178462.3218	628102.8738		676.0769
F-12	984+80.9600	-1.7631	5907.8144	2178458.0981	628100.4108		680.9663
F-13	984+85.8600	-1.7631	5907.8417	2178453.8891	628097.9226		685.8558
F.S. 1	984+90.5558	-1.7631	5907.8679	2178449.8696	628095.5144	151917.5969	690.5414
F-14	984+90.7600	-1.7631	5907.8691	2178449.6951	628095.4092		690.7452
F-15	984+95.6600	-1.7631	5907.8964	2178445.5163	628092.8707		695.6346
F-16	985+00.5600	-1.7631	5907.9238	2178441.3527	628090.3073		700.5241
F-17	985+05.4600	-1.7631	5907.9511	2178437.2045	628087.7190		705.4135
F-18	985+10.3600	-1.7631	5907.9784	2178433.0719	628085.1059		710.3030
F-19	985+15.2600	-1.7631	5908.0058	2178428.9551	628082.4681		715.1924
CL PIER 2	985+20.1600	-1.7631	5908.0331	2178424.8541	628079.8057	143365.9222	720.0819
F-1	985+26.7600	-1.7631	5908.0700	2178419.3556	628076.1809		726.6677
F-2	985+33.3600	-1.7631	5908.1068	2178413.8865	628072.5119		733.2534
F-3	985+39.9600	-1.7631	5908.1436	2178408.4472	628068.7989		739.8392
F-4	985+46.5600	-1.7631	5908.1805	2178403.0380	628065.0422		746.4250
F.S. 2	985+49.7642	-1.7631	5908.1983	2178400.4229	628063.2027	135890.4307	749.6223
F-5	985+53.1600	-1.7631	5908.2173	2178397.6593	628061.2420		753.0108
F-6	985+59.7600	-1.7631	5908.2541	2178392.3114	628057.3986		759.5966
F-7	985+66.3600	-1.7631	5908.2910	2178386.9946	628053.5121		766.1824
F-8	985+72.9600	-1.7631	5908.3278	2178381.7094	628049.5829		772.7681
F-9	985+79.5600	-1.7631	5908.3646	2178376.4560	628045.6112		779.3539
F-10	985+86.1600	-1.7631	5908.4014	2178371.2348	628041.5973		785.9397
F-11	985+92.7600	-1.7631	5908.4383	2178366.0462	628037.5414		792.5255
F-12	985+99.3600	-1.7631	5908.4751	2178360.8904	628033.4438		799.1113
F-13	986+05.9600	-1.7631	5908.5119	2178355.7678	628029.3048		805.6971
F-14	986+12.5600	-1.7631	5908.5488	2178350.6788	628025.1246		812.2828
F.S. 3	986+16.4308	-1.7631	5908.5704	2178347.7099	628022.6539	122136.1262	816.1453
F-15	986+19.1600	-1.7631	5908.5856	2178345.6236	628020.9035		818.8686
F-16	986+25.7600	-1.7631	5908.6224	2178340.6027	628016.6417		825.4544
F-17	986+32.3600	-1.7631	5908.6593	2178335.6163	628012.3397		832.0402
F-18	986+38.9600	-1.7631	5908.6961	2178330.6647	628007.9975		838.6260
F-19	986+45.5600	-1.7631	5908.7329	2178325.7483	628003.6156		845.2118
CL PIER 3	986+52.1600	-1.7631	5908.7698	2178320.8674	627999.1942	116143.8381	851.7975
F-1	986+59.1506	-1.7631	5908.8088	2178315.7367	627994.4683		858.7731
F-2	986+66.1412	-1.7631	5908.8478	2178310.6465	627989.6988		865.7486
F-3	986+73.1318	-1.7631	5908.8868	2178305.5973	627984.8860		872.7242
F-4	986+80.1224	-1.7631	5908.9258	2178300.5893	627980.0303		879.6997
F.S. 4	986+85.9256	-1.7631	5908.9582	2178296.4636	627975.9669	111181.3630	885.4904
F-5	986+87.1130	-1.7631	5908.9648	2178295.6230	627975.1320		886.6752
F-6	986+94.1036	-1.7631	5909.0038	2178290.6987	627970.1914		893.6508
F-7	987+01.0942	-1.7631	5909.0428	2178285.8168	627965.2089		900.6263
F-8	987+08.0848	-1.7631	5909.0818	2178280.9776	627960.1850		907.6018
F-9	987+15.0754	-1.7631	5909.1209	2178276.1815	627955.1199		914.5774
F-10	987+22.0660	-1.7631	5909.1599	2178271.4289	627950.0140		921.5529
F-11	987+29.0566	-1.7631	5909.1989	2178266.7200	627944.8677		928.5285
F-12	987+36.0472	-1.7631	5909.2379	2178262.0552	627939.6814		935.5040
F-13	987+43.0377	-1.7631	5909.2769	2178257.4349	627934.4554		942.4795
F-14	987+50.0283	-1.7631	5909.3159	2178252.8594	627929.1902		949.4551
F.S. 5	987+55.2590	-1.7631	5909.3451	2178249.4654	627925.2251	102721.1255	954.6745
F-15	987+57.0189	-1.7631	5909.3549	2178248.3291	627923.8861		956.4306
F-16	987+64.0095	-1.7631	5909.3939	2178243.8442	627918.5435		963.4061
F-17	987+71.0001	-1.7631	5909.4329	2178239.4051	627913.1627		970.3817
F-18	987+77.9907	-1.7631	5909.4720	2178235.0121	627907.7443		977.3572
F-19	987+84.9813	-1.7631	5909.5110	2178230.6655	627902.2885		984.3328
CL PIER 4	987+91.9719	-1.7631	5909.5500	2178226.3657	627896.7958	573651.9941	991.3083
F-1	987+99.2813	-1.7631	5909.5908	2178221.9202	627891.0136		998.6020
F-2	988+06.5907	-1.7631	5909.6316	2178217.5265	627885.1919		1005.8956
F-3	988+13.9001	-1.7631	5909.6723	2178213.1849	627879.3312		1013.1893
F-4	988+21.2095	-1.7631	5909.7131	2178208.8958	627873.4320		1020.4829
F.S. 7	988+23.6183	-1.7631	5909.7266	2178207.4940	627871.4795	96177.9045	1022.8865
F-5	988+28.5189	-1.7631	5909.7539	2178204.6596	627867.4947		1027.7766
F-6	988+35.8283	-1.7631	5909.7947	2178200.4766	627861.5198		1035.0703
F-7	988+43.1377	-1.7631	5909.8355	2178196.3471	627855.5077		1042.3639
F-8	988+50.4472	-1.7631	5909.8763	2178192.2714	627849.4591		1049.6576
F-9	988+57.7566	-1.7631	5909.9171	2178188.2500	627843.3743		1056.9512
F-10	988+65.0660	-1.7631	5909.9579	2178184.2830	627837.2538		1064.2449
F-11	988+72.3754	-1.7631	5909.9987	2178180.3708	627831.0981		1071.5386
F-12	988+79.6848	-1.7631	5910.0395	2178176.5138	627824.9078		1078.8322
F-13	988+86.9942	-1.7631	5910.0803	2178172.7122	627818.6833		1086.1259
F-14	988+94.3036	-1.7631	5910.1210	2178168.9663	627812.4250		1093.4195
F-15	989+01.6130	-1.7631	5910.1618	2178165.2765	627806.1336		1100.7132
F.S. 9	989+04.4725	-1.7631	5910.1778	2178163.8483	627803.6634	90196.7443	1103.5665
F-16	989+08.9224	-1.7631	5910.2026	2178161.6430	627799.8094		1108.0068
F-17	989+16.2318	-1.7631	5910.2434	2178158.0661	627793.4531		1115.3005
F-18	989+23.5412	-1.7631	5910.2842	2178154.5462	627787.0651		1122.5942
F-19	989+30.8506	-1.7631	5910.3250	2178151.0834	627780.6458		1129.8878
CL PIER 5	989+38.1600	-1.7631	5910.3658	2178147.6780	627774.1960	88163.8737	1137.1815
F-1	989+43.9100	-1.7631	5910.3979	2178145.0398	627769.1009		1142.9191
F-2	989+49.6600	-1.7631	5910.4300	2178142.4374	627763.9875		1148.6567
F-3	989+55.4100	-1.7631	5910.4620	2178139.8709	627758.8558		1154.3943
F-4	989+61.1600	-1.7631	5910.4941	2178137.3406	627753.7063		1160.1319
F-5	989+66.9100	-1.7631	5910.5262	2178134.8465	627748.5391		1165.8696
F-6	989+72.6600	-1.7631	5910.5583	2178132.3888	627743.3546		1171.6072
F.S. 10	989+74.9100	-1.7631	5910.5709	2178131.4370	627741.3211	86211.5150	1173.8523
F-7	989+78.4100	-1.7631	5910.5904	2178129.9676	627738.1529		1177.3448
F-8	989+84.1600	-1.7631	5910.6225	2178127.5830	627732.9343		1183.0824
F-9	989+89.9100	-1.7631	5910.6546	2178125.2351	627727.6991		1188.8200
F-10	989+95.6600	-1.7631	5910.6867	2178122.9240	627722.4475		1194.5576
F-11	990+01.4100	-1.7631	5910.7187	2178120.6498	627717.1798		1200.2952
F-12	990+07.1600	-1.7631	5910.7508	2178118.4128	627711.8963		1206.0329
F-13	990+12.9100	-1.7631	5910.7829	2178116.2129	627706.5972		1211.7705
F-14	990+18.6600	-1.7631	5910.8150	2178114.0503	627701.2828		1217.5081
F-15	990+24.4100	-1.7631	5910.8471	2178111.9250	627695.9533		1223.2457
F-16	990+30.1600	-1.7631	5910.8792	2178109.8373	627690.6090		1228.9833
F-17	990+35.9100	-1.7631	5910.9113	2178107.7871	627685.2502		1234.7209
F-18	990+41.6600	-1.7631	5910.9434	2178105.7747	627679.8771		1240.4585
F-19	990+47.4100	-1.7631	5910.9754	2178103.8000	627674.4900		1246.1962
CL ABUT 6	990+53.1600	-1.7631	5911.0075	2178101.8633	627669.0891	82867.9918	1251.9338
BF ABUT 6	990+56.6676	-1.7631	5911.0271	2178100.7005	627665.7879	82866.7581	1255.4338

LONGITUDINAL LINE: HORIZ. CONT. LINE

BENT LINE DESCRIPTION OR FRACTIONAL POINT DESIGNATION	STATION	OFFSET	ELEVATION	COORDINATES FROM LAYOUT LINE EAST	COORDINATES FROM LAYOUT LINE NORTH	BENT LINE LENGTH FROM N-GRID or OFFSET FROM EXTERIOR GIRDER	GIRDER LINE LENGTH
BF ABUT 1	984+18.6600	0.0000	5907.5237	2178512.0774	628131.4011	177179.6256	620.1363
CL ABUT 1	984+22.1600	0.0000	5907.5531	2178508.9365	628129.8569	177172.5374	623.6363
F-1	984+27.0600	0.0000	5907.5933	2178504.5504	628127.6724		628.5363
F-2	984+31.9600	0.0000	5907.6322	2178500.1774	628125.4618		633.4363
F-3	984+36.8600	0.0000	5907.6698	2178495.8177	628123.2250		638.3363
F-4	984+41.7600	0.0000	5907.7063	2178491.4715	628120.9622		643.2363
F-5	984+46.6600	0.0000	5907.7414	2178487.1389	628118.6733		648.1363
F-6	984+51.5600	0.0000	5907.7754	2178482.8202	628116.3586		653.0363
F-7	984+56.4600	0.0000	5907.8080	2178478.5153	628114.0181		657.9363
F-8	984+61.3600	0.0000	5907.8395	2178474.2245	628111.6518		662.8363
F-9	984+66.2600	0.0000	5907.8697	2178469.9480	628109.2599		667.7363
F-10	984+71.1600	0.0000	5907.8986	2178465.6858	628106.8425		672.6363
F-11	984+76.0600	0.0000	5907.9263	2178461.4383	628104.3995		677.5363
F-12	984+80.9600	0.0000	5907.9537	2178457.2054	628101.9312		682.4363
F-13	984+85.8600	0.0000	5907.9810	2178452.9873	628099.4376		687.3363
F-14	984+90.7600	0.0000	5908.0084	2178448.7843	628096.9188		692.2363
F-15	984+95.6600	0.0000	5908.0357	2178444.5964	628094.3748		697.1363
F-16	985+00.5600	0.0000	5908.0630	2178440.4239	628091.8059		702.0363
F-17	985+05.4600	0.0000	5908.0904	2178436.2667	628089.2120		706.9363
F-18	985+10.3600	0.0000	5908.1177	2178432.1252	628086.5932		711.8363
F-19	985+15.2600	0.0000	5908.1451	2178427.9995	628083.9498		716.7363
CL PIER 2	985+20.1600	0.0000	5908.1724	2178423.8896	628081.2816	143364.1591	721.6363
F-1	985+26.7600	0.0000	5908.2093	2178418.3792	628077.6490		728.2363
F-2	985+33.3600	0.0000	5908.2461	2178412.8984	628073.9721		734.8363
F-3	985+39.9600	0.0000	5908.2829	2178407.4473	628070.2511		741.4363
F-4	985+46.5600	0.0000	5908.3197	2178402.0264	628066.4863		748.0363
F-5	985+53.1600	0.0000	5908.3566	2178396.6361	628062.6779		754.6363
F-6	985+59.7600	0.0000	5908.3934	2178391.2767	628058.8261		761.2363
F-7	985+66.3600	0.0000	5908.4302	2178385.9484	628054.9313		767.8363
F-8	985+72.9600	0.0000	5908.4671	2178380.6518	628050.9936		774.4363
F-9	985+79.5600	0.0000	5908.5039	2178375.3871	628047.0133		781.0363
F-10	985+86.1600	0.0000	5908.5407	2178370.1546	628042.9907		787.6363
F-11	985+92.7600	0.0000	5908.5776	2178364.9548	628038.9261		794.2363
F-12	985+99.3600	0.0000	5908.6144	2178359.7879	628034.8196		800.8363
F-13	986+05.9600	0.0000	5908.6512	2178354.6542	628030.6717		807.4363
F-14	986+12.5600	0.0000	5908.6881	2178349.5542	628026.4825		814.0363
F-15	986+19.1600	0.0000	5908.7249	2178344.4882	628022.2522		820.6363
F-16	986+25.7600	0.0000	5908.7617	2178339.4564	628017.9813		827.2363
F-17	986+32.3600	0.0000	5908.7986	2178334.4592	628013.6699		833.8363
F-18	986+38.9600	0.0000	5908.8354	2178329.4969	628009.3184		840.4363
F-19	986+45.5600	0.0000	5908.8722	2178324.5699	628004.9270		847.0363
CL PIER 3	986+52.1600	0.0000	5908.9090	2178319.6784	628000.4961	116142.0750	853.6363
F-1	986+59.0645	0.0000	5908.9476	2178314.5997	627995.8186		860.5408
F-2	986+65.9690	0.0000	5908.9861	2178309.5607	627991.0985		867.4453
F-3	986+72.8735	0.0000	5909.0246	2178304.5616	627986.3360		874.3498
F-4	986+79.7780	0.0000	5909.0632	2178299.6029	627981.5316		881.2543
F-5	986+86.6825	0.0000	5909.1017	2178294.6848	627976.6854		888.1588
F-6	986+93.5870	0.0000	5909.1402	2178289.8079	627971.7980		895.0633
F-7	987+00.4915	0.0000	5909.1788	2178284.9723	627966.8696		901.9678
F-8	987+07.3960	0.0000	5909.2173	2178280.1785	627961.9006		908.8723
F-9	987+14.3005	0.0000	5909.2558	2178275.4268	627956.8913		915.7768
F-10	987+21.2050	0.0000	5909.2944	2178270.7174	627951.8421		922.6813
F-11	987+28.1095	0.0000	5909.3329	2178266.0509	627946.7534		929.5858
F-12	987+35.0140	0.0000	5909.3714	2178261.4274	627941.6255		936.4903
F-13	987+41.9185	0.0000	5909.4099	2178256.8474	627936.4588		943.3948
F-14	987+48.8230	0.0000	5909.4485	2178252.3111	627931.2536		950.2993
F-15	987+55.7275	0.0000	5909.4870	2178247.8189	627926.0103		957.2038
F-16	987+62.6320	0.0000	5909.5255	2178243.3710	627920.7294		964.1083
F-17	987+69.5365	0.0000	5909.5641	2178238.9679	627915.4111		971.0128
F-18	987+76.4410	0.0000	5909.6026	2178234.6098	627910.0558		977.9173
F-19	987+83.3455	0.0000	5909.6411	2178230.2970	627904.6640		984.8218
CL PIER 4	987+90.2500	0.0000	5909.6797	2178226.0299	627899.2360	573649.5309	991.7263
F-1	987+97.6455	0.0000	5909.7209	2178221.5102	627893.3823		999.1218
F-2	988+05.0410	0.0000	5909.7622	2178217.0437	627887.4880		1006.5173
F-3	988+12.4365	0.0000	5909.8035	2178212.6305	627881.5535		1013.9128
F-4	988+19.8320	0.0000	5909.8447	2178208.2712	627875.5795		1021.3083
F-5	988+27.2275	0.0000	5909.8860	2178203.9660	627869.5663		1028.7038
F-6	988+34.6230	0.0000	5909.9273	2178199.7154	627863.5144		1036.0993
F-7	988+42.0185	0.0000	5909.9685	2178195.5196	627857.4244		1043.4948
F-8	988+49.4140	0.0000	5910.0098	2178191.3789	627851.2968		1050.8903
F-9	988+56.8095	0.0000	5910.0511	2178187.2939	627845.1319		1058.2858
F-10	988+64.2050	0.0000	5910.0924	2178183.2646	627838.9304		1065.6813
F-11	988+71.6005	0.0000	5910.1336	2178179.2916	627832.6928		1073.0768
F-12	988+78.9960	0.0000	5910.1749	2178175.3751	627826.4195		1080.4723
F-13	988+86.3915	0.0000	5910.2162	2178171.5155	627820.1111		1087.8678
F-14	988+93.7870	0.0000	5910.2574	2178167.7130	627813.7681		1095.2633
F-15	989+01.1825	0.0000	5910.2987	2178163.9679	627807.3910		1102.6588
F-16	989+08.5780	0.0000	5910.3400	2178160.2807	627800.9803		1110.0543
F-17	989+15.9735	0.0000	5910.3813	2178156.6515	627794.5365		1117.4498
F-18	989+23.3690	0.0000	5910.4225	2178153.0806	627788.0602		1124.8453
F-19	989+30.7645	0.0000	5910.4638	2178149.5685	627781.5519		1132.2408
CL PIER 5	989+38.1600	0.0000	5910.5051	2178146.1152	627775.0122	88162.1106	1139.6363
F-1	989+43.9100	0.0000	5910.5372	2178143.4713	627769.9061		1145.3863
F-2	989+49.6600	0.0000	5910.5692	2178140.8633	627764.7816		1151.1363
F-3	989+55.4100	0.0000	5910.6013	2178138.2913	627759.6389		1156.8863
F-4	989+61.1600	0.0000	5910.6334	2178135.7555	627754.4783		1162.6363
F-5	989+66.9100	0.0000	5910.6655	2178133.2561	627749.3000		1168.3863
F-6	989+72.6600	0.0000	5910.6976	2178130.7930	627744.1042		1174.1363
F-7	989+78.4100	0.0000	5910.7297	2178128.3666	627738.8913		1179.8863
F-8	989+84.1600	0.0000	5910.7618	2178125.9768	627733.6614		1185.6363
F-9	989+89.9100	0.0000	5910.7939	2178123.6238	627728.4149		1191.3863
F-10	989+95.6600	0.0000	5910.8259	2178121.3077	627723.1520		1197.1363
F-11	990+01.4100	0.0000	5910.8580	2178119.0287	627717.8730		1202.8863
F-12	990+07.1600	0.0000	5910.8901	2178116.7868	627712.5780		1208.6363
F-13	990+12.9100	0.0000	5910.9222	2178114.5822	627707.2675		1214.3863
F-14	990+18.6600	0.0000	5910.9543	2178112.4149	627701.9416		1220.1363
F-15	990+24.4100	0.0000	5910.9864	2178110.2850	627696.6006		1225.8863
F-16	990+30.1600	0.0000	5911.0185	2178108.1928	627691.2448		1231.6363
F-17	990+35.9100	0.0000	5911.0506	2178106.1382	627685.8744		1237.3863
F-18	990+41.6600	0.0000	5911.0826	2178104.1214	627680.4897		1243.1363
F-19	990+47.4100	0.0000	5911.1147	2178102.1425	627675.0909		1248.8863
CL ABUT 6	990+53.1600	0.0000	5911.1468	2178100.2016	627669.6785	82866.2287	1254.6363
BF ABUT 6	990+56.6600	0.0000	5911.1664	2178099.0388	627666.3773	82864.9950	1258.1363

LONGITUDINAL LINE: WEB W.P. 4

BENT LINE DESCRIPTION OR FRACTIONAL POINT DESIGNATION	STATION	OFFSET	ELEVATION	COORDINATES FROM LAYOUT LINE EAST	COORDINATES FROM LAYOUT LINE NORTH	BENT LINE LENGTH FROM N-GRID or OFFSET FROM EXTERIOR GIRDER	GIRDER LINE LENGTH
BF ABUT 1	984+18.6843	5.7139	5907.9753	2178509.5455	628136.5234	177173.9117	624.4898
CL ABUT 1	984+22.1600	5.7139	5908.0045	2178506.4046	628134.9792	177166.8235	627.9898
F-1	984+27.0600	5.7139	5908.0447	2178501.9878	628132.7795		632.9240
F-2	984+31.9600	5.7139	5908.0836	2178497.5843	628130.5534		637.8582
F-3	984+36.8600	5.7139	5908.1212	2178493.1942	628128.3010		642.7924
F-4	984+41.7600	5.7139	5908.1577	2178488.8177	628126.0224		647.7266
F-5	984+46.6600	5.7139	5908.1928	2178484.4548	628123.7176		652.6608
F-6	984+51.5600	5.7139	5908.2267	2178480.1059	628121.3867		657.5950
F-7	984+56.4600	5.7139	5908.2594	2178475.7710	628119.0298		662.5293
F-8	984+61.3600	5.7139	5908.2909	2178471.4502	628116.6470		667.4635
F-9	984+66.2600	5.7139	5908.3211	2178467.1439	628114.2384		672.3977

NOTE: ELEVATIONS ARE AT TOP OF CONCRETE DECK 0.1667 FEET BELOW FINISHED GRADE.

E-470
Engineer 470 Partnership

DIVISION OF HIGHWAYS

I-25/470 INTERCHANGE
RAMP E FLYOVER
BRIDGE DECK ELEVATIONS

Designer	J. Stapleton	Structure Numbers	F-17-JW
Detailer	D. Kurschinski		
Drawing Number B-43 of 45 Drawings			

Revision Dates (Preliminary Stage Only)

STATE OF COLORADO
STATE DEPARTMENT OF HIGHWAYS
DIVISION OF HIGHWAYS:
C.O.H. FORM NO. 126:
REV. FEB. 1984

41

42

BRIDGE DECK ELEVATIONS

REVISIONS			
A-1	4-2-90	Revise Geometry	J.L.S.

AS CONSTRUCTED

NO REVISIONS ☐ REVISED ☐ VOID ☐

FED. ROAD REGION	DIVISION	PROJ. NO.	SHEET NO.	SHEET TOTALS
VIII	COLORADO	1A06	154	

BENT LINE DESCRIPTION OR FRACTIONAL POINT DESIGNATION	STATION	OFFSET	ELEVATION	COORDINATES FROM LAYOUT LINE: EAST	COORDINATES FROM LAYOUT LINE: NORTH	BENT LINE LENGTH FROM N-GRID or OFFSET FROM EXTERIOR GIRDER	GIRDER LINE LENGTH
F-10	984+71.1600	5.7139	5908.3500	2178462.8520	628111.8041		677.3319
F-11	984+76.0600	5.7139	5908.3777	2178458.5747	628109.3441		682.2661
F-12	984+80.9600	5.7139	5908.4051	2178454.3123	628106.8586		687.2003
F-13	984+85.8600	5.7139	5908.4324	2178450.0648	628104.3475		692.1345
F.S. 1	984+90.5558	5.7139	5908.4586	2178446.0085	628101.9173	151910.1199	696.8631
F-14	984+90.7600	5.7139	5908.4598	2178445.8324	628101.8111		697.0687
F-15	984+95.6600	5.7139	5908.4871	2178441.6153	628099.2494		702.0029
F-16	985+00.5600	5.7139	5908.5144	2178437.4136	628096.6625		706.9371
F-17	985+05.4600	5.7139	5908.5418	2178433.2275	628094.0505		711.8713
F-18	985+10.3600	5.7139	5908.5691	2178429.0571	628091.4135		716.8055
F-19	985+15.2600	5.7139	5908.5965	2178424.9025	628088.7516		721.7397
CL PIER 2	985+20.1600	5.7139	5908.6238	2178420.7639	628086.0648	143358.4452	726.6739
F-1	985+26.7600	5.7139	5908.6607	2178415.2151	628082.4069		733.3200
F-2	985+33.3600	5.7139	5908.6975	2178409.6960	628078.7043		739.9661
F-3	985+39.9600	5.7139	5908.7343	2178404.2069	628074.9573		746.6122
F-4	985+46.5600	5.7139	5908.7711	2178398.7482	628071.1662		753.2582
F.S. 2	985+49.7642	5.7139	5908.7890	2178396.1091	628069.3098	135882.9537	756.4848
F-5	985+53.1600	5.7139	5908.8080	2178393.3202	628067.3312		759.9043
F-6	985+59.7600	5.7139	5908.8448	2178387.9233	628063.4525		766.5504
F-7	985+66.3600	5.7139	5908.8816	2178382.5579	628059.5305		773.1964
F-8	985+72.9600	5.7139	5908.9185	2178377.2243	628055.5653		779.8425
F-9	985+79.5600	5.7139	5908.9553	2178371.9228	628051.5573		786.4886
F-10	985+86.1600	5.7139	5908.9921	2178366.6538	628047.5066		793.1347
F-11	985+92.7600	5.7139	5909.0290	2178361.4177	628043.4136		799.7807
F-12	985+99.3600	5.7139	5909.0658	2178356.2147	628039.2785		806.4268
F-13	986+05.9600	5.7139	5909.1026	2178351.0453	628035.1016		813.0729
F-14	986+12.5600	5.7139	5909.1395	2178345.9096	628030.8831		819.7190
F.S. 3	986+16.4308	5.7139	5909.1611	2178342.9136	628028.3898	122128.6492	823.6168
F-15	986+19.1600	5.7139	5909.1763	2178340.8082	628026.6234		826.3650
F-16	986+25.7600	5.7139	5909.2131	2178335.7413	628022.3226		833.0111
F-17	986+32.3600	5.7139	5909.2500	2178330.7092	628017.9812		839.6572
F-18	986+38.9600	5.7139	5909.2868	2178325.7123	628013.5993		846.3033
F-19	986+45.5600	5.7139	5909.3236	2178320.7509	628009.1772		852.9493
CL PIER 3	986+52.1600	5.7139	5909.3604	2178315.8253	628004.7153	116136.3611	859.5954
F-1	986+58.7892	5.7139	5909.3974	2178310.9143	628000.1938		866.2709
F-2	986+65.4184	5.7139	5909.4344	2178306.0401	627995.6327		872.9463
F-3	986+72.0476	5.7139	5909.4714	2178301.2030	627991.0323		879.6218
F-4	986+78.6768	5.7139	5909.5084	2178296.4033	627986.3929		886.2973
F-5	986+85.3060	5.7139	5909.5454	2178291.6413	627981.7147		892.9727
F.S. 4	986+85.9256	5.7139	5909.5489	2178291.1981	627981.2755	111173.8860	893.5967
F-6	986+91.9351	5.7139	5909.5824	2178286.9174	627976.9981		899.6482
F-7	986+98.5643	5.7139	5909.6194	2178282.2318	627972.2434		906.3237
F-8	987+05.1935	5.7139	5909.6564	2178277.5849	627967.4509		912.9992
F-9	987+11.8227	5.7139	5909.6934	2178272.9769	627962.6210		919.6746
F-10	987+18.4519	5.7139	5909.7304	2178268.4083	627957.7539		926.3501
F-11	987+25.0811	5.7139	5909.7674	2178263.8792	627952.8499		933.0256
F-12	987+31.7103	5.7139	5909.8044	2178259.3899	627947.9094		939.7010
F-13	987+38.3395	5.7139	5909.8414	2178254.9408	627942.9327		946.3765
F-14	987+44.9687	5.7139	5909.8784	2178250.5322	627937.9202		953.0520
F-15	987+51.5979	5.7139	5909.9154	2178246.1643	627932.8721		959.7274
F.S. 5	987+55.2590	5.7139	5909.9358	2178243.7696	627930.0691	102713.6485	963.4141
F-16	987+58.2271	5.7139	5909.9523	2178241.8375	627927.7888		966.4029
F-17	987+64.8563	5.7139	5909.9893	2178237.5519	627922.6706		973.0784
F-18	987+71.4854	5.7139	5910.0263	2178233.3080	627917.5179		979.7538
F-19	987+78.1146	5.7139	5910.0633	2178229.1059	627912.3310		986.4293
CL PIER 4	987+84.7438	5.7139	5910.1003	2178224.9460	627907.1102	573641.5825	993.1048
F-1	987+92.4146	5.7139	5910.1431	2178220.1853	627901.0273		1000.8291
F-2	988+00.0854	5.7139	5910.1859	2178215.4820	627894.9000		1008.5535
F-3	988+07.7563	5.7139	5910.2287	2178210.8362	627888.7290		1016.2779
F-4	988+15.4271	5.7139	5910.2716	2178206.2485	627882.5146		1024.0022
F-5	988+23.0979	5.7139	5910.3144	2178201.7192	627876.2576		1031.7266
F.S. 7	988+23.6183	5.7139	5910.3173	2178201.4140	627875.8315	96170.4275	1032.2506
F-6	988+30.7687	5.7139	5910.3572	2178197.2487	627869.9583		1039.4509
F-7	988+38.4395	5.7139	5910.4000	2178192.8375	627863.6175		1047.1753
F-8	988+46.1103	5.7139	5910.4428	2178188.4859	627857.2356		1054.8996
F-9	988+53.7811	5.7139	5910.4856	2178184.1943	627850.8132		1062.6240
F-10	988+61.4519	5.7139	5910.5284	2178179.9630	627844.3508		1070.3484
F-11	988+69.1227	5.7139	5910.5712	2178175.7926	627837.8491		1078.0727
F-12	988+76.7935	5.7139	5910.6140	2178171.6832	627831.3086		1085.7971
F-13	988+84.4643	5.7139	5910.6568	2178167.6353	627824.7299		1093.5214
F-14	988+92.1351	5.7139	5910.6996	2178163.6492	627818.1135		1101.2458
F-15	988+99.8060	5.7139	5910.7424	2178159.7253	627811.4600		1108.9701
F.S. 9	989+04.4725	5.7139	5910.7685	2178157.3688	627807.3945	90189.2673	1113.6693
F-16	989+07.4768	5.7139	5910.7852	2178155.8640	627804.7701		1116.6945
F-17	989+15.1476	5.7139	5910.8280	2178152.0655	627798.0443		1124.4189
F-18	989+22.8184	5.7139	5910.8708	2178148.3302	627791.2831		1132.1432
F-19	989+30.4892	5.7139	5910.9137	2178144.6584	627784.4873		1139.8676
CL PIER 5	989+38.1600	5.7139	5910.9565	2178141.0505	627777.6574	88156.3967	1147.5919
F-1	989+43.9100	5.7139	5910.9886	2178138.3881	627772.5157		1153.3821
F-2	989+49.6600	5.7139	5911.0206	2178135.7618	627767.3554		1159.1722
F-3	989+55.4100	5.7139	5911.0527	2178133.1719	627762.1768		1164.9623
F-4	989+61.1600	5.7139	5911.0848	2178130.6184	627756.9801		1170.7525
F-5	989+66.9100	5.7139	5911.1169	2178128.1015	627751.7656		1176.5426
F-6	989+72.6600	5.7139	5911.1490	2178125.6213	627746.5336		1182.3328
F.S. 10	989+74.9100	5.7139	5911.1615	2178124.6608	627744.4816	86204.0380	1184.5985
F-7	989+78.4100	5.7139	5911.1811	2178123.1779	627741.2843		1188.1229
F-8	989+84.1600	5.7139	5911.2132	2178120.7715	627736.0179		1193.9130
F-9	989+89.9100	5.7139	5911.2453	2178118.4020	627730.7348		1199.7032
F-10	989+95.6600	5.7139	5911.2773	2178116.0698	627725.4352		1205.4933
F-11	990+01.4100	5.7139	5911.3094	2178113.7749	627720.1193		1211.2835
F-12	990+07.1600	5.7139	5911.3415	2178111.5173	627714.7874		1217.0736
F-13	990+12.9100	5.7139	5911.3736	2178109.2973	627709.4397		1222.8637
F-14	990+18.6600	5.7139	5911.4057	2178107.1149	627704.0767		1228.6539
F-15	990+24.4100	5.7139	5911.4378	2178104.9702	627698.6984		1234.4440
F-16	990+30.1600	5.7139	5911.4699	2178102.8633	627693.3052		1240.2342
F-17	990+35.9100	5.7139	5911.5020	2178100.7944	627687.8973		1246.0243
F-18	990+41.6600	5.7139	5911.5340	2178098.7635	627682.4750		1251.8144
F-19	990+47.4100	5.7139	5911.5661	2178096.7708	627677.0386		1257.6046
CL ABUT 6	990+53.1600	5.7139	5911.5982	2178094.8163	627671.5883	82860.5148	1263.3947
BF ABUT 6	990+56.6357	5.7139	5911.6176	2178093.6534	627668.2871	82859.2810	1266.8947
LONGITUOINAL LINE: RT. BARRIER FACE							
BF ABUT 1	984+18.6939	8.0000	5908.1560	2178508.5324	628138.5728	177171.6255	626.2316
CL ABUT 1	984+22.1600	8.0000	5908.1851	2178505.3915	628137.0286	177164.5374	629.7316
F-1	984+27.0600	8.0000	5908.2253	2178500.9625	628134.8228		634.6795
F-2	984+31.9600	8.0000	5908.2642	2178496.5468	628132.5905		639.6274
F-3	984+36.8600	8.0000	5908.3018	2178492.1445	628130.3319		644.5753
F-4	984+41.7600	8.0000	5908.3383	2178487.7559	628128.0469		649.5232
F-5	984+46.6600	8.0000	5908.3734	2178483.3809	628125.7357		654.4711
F-6	984+51.5600	8.0000	5908.4074	2178479.0199	628123.3984		659.4190
F-7	984+56.4600	8.0000	5908.4400	2178474.6730	628121.0350		664.3669
F-8	984+61.3600	8.0000	5908.4715	2178470.3403	628118.6456		669.3148
F-9	984+66.2600	8.0000	5908.5017	2178466.0219	628116.2303		674.2627
F-10	984+71.1600	8.0000	5908.5306	2178461.7182	628113.7892		679.2105
F-11	984+76.0600	8.0000	5908.5583	2178457.4291	628111.3224		684.1584
F-12	984+80.9600	8.0000	5908.5857	2178453.1548	628108.8300		689.1063
F-13	984+85.8600	8.0000	5908.6130	2178448.8955	628106.3120		694.0542
F-14	984+90.7600	8.0000	5908.6404	2178444.6514	628103.7685		699.0021
F-15	984+95.6600	8.0000	5908.6677	2178440.4226	628101.1997		703.9500
F-16	985+00.5600	8.0000	5908.6950	2178436.2093	628098.6057		708.8979
F-17	985+05.4600	8.0000	5908.7224	2178432.0115	628095.9864		713.8458
F-18	985+10.3600	8.0000	5908.7497	2178427.8295	628093.3421		718.7937
F-19	985+15.2600	8.0000	5908.7771	2178423.6634	628090.6728		723.7416
CL PIER 2	985+20.1600	8.0000	5908.8044	2178419.5134	628087.9785	143356.1591	728.6895
F-1	985+26.7600	8.0000	5908.8413	2178413.9492	628084.3104		735.3540
F-2	985+33.3600	8.0000	5908.8781	2178408.4147	628080.5976		742.0185
F-3	985+39.9600	8.0000	5908.9149	2178402.9104	628076.8402		748.6830
F-4	985+46.5600	8.0000	5908.9517	2178397.4366	628073.0386		755.3475
F-5	985+53.1600	8.0000	5908.9886	2178391.9935	628069.1930		762.0120
F-6	985+59.7600	8.0000	5909.0254	2178386.5817	628065.3036		768.6765
F-7	985+66.3600	8.0000	5909.0622	2178381.2014	628061.3706		775.3410
F-8	985+72.9600	8.0000	5909.0991	2178375.8530	628057.3945		782.0055
F-9	985+79.5600	8.0000	5909.1359	2178370.5368	628053.3753		788.6700
F-10	985+86.1600	8.0000	5909.1727	2178365.2532	628049.3134		795.3345
F-11	985+92.7600	8.0000	5909.2096	2178360.0025	628045.2090		801.9990
F-12	985+99.3600	8.0000	5909.2464	2178354.7851	628041.0625		808.6635
F-13	986+05.9600	8.0000	5909.2832	2178349.6013	628036.8740		815.3281
F-14	986+12.5600	8.0000	5909.3201	2178344.4515	628032.6438		821.9926
F-15	986+19.1600	8.0000	5909.3569	2178339.3359	628028.3722		828.6571
F-16	986+25.7600	8.0000	5909.3937	2178334.2549	628024.0595		835.3216
F-17	986+32.3600	8.0000	5909.4306	2178329.2089	628019.7060		841.9861
F-18	986+38.9600	8.0000	5909.4674	2178324.1981	628015.3120		848.6506
F-19	986+45.5600	8.0000	5909.5042	2178319.2229	628010.8777		855.3151
CL PIER 3	986+52.1600	8.0000	5909.5410	2178314.2837	628006.4034	116134.0750	861.9796
F-1	986+58.6806	8.0000	5909.5774	2178309.4394	628001.9440		868.5639
F-2	986+65.2012	8.0000	5909.6138	2178304.6309	627997.4461		875.1483
F-3	986+71.7218	8.0000	5909.6502	2178299.8583	627992.9101		881.7326
F-4	986+78.2424	8.0000	5909.6866	2178295.1220	627988.3362		888.3169
F-5	986+84.7630	8.0000	5909.7230	2178290.4223	627983.7247		894.9013
F-6	986+91.2836	8.0000	5909.7594	2178285.7595	627979.0759		901.4856
F-7	986+97.8042	8.0000	5909.7958	2178281.1338	627974.3901		908.0699
F-8	987+04.3248	8.0000	5909.8322	2178276.5456	627969.6676		914.6543
F-9	987+10.8454	8.0000	5909.8685	2178271.9952	627964.9087		921.2386
F-10	987+17.3660	8.0000	5909.9049	2178267.4829	627960.1137		927.8229
F-11	987+23.8866	8.0000	5909.9413	2178263.0089	627955.2830		934.4072
F-12	987+30.4072	8.0000	5909.9777	2178258.5735	627950.4167		940.9916
F-13	987+36.9278	8.0000	5910.0141	2178254.1770	627945.5152		947.5759
F-14	987+43.4484	8.0000	5910.0505	2178249.8197	627940.5789		954.1602
F-15	987+49.9690	8.0000	5910.0869	2178245.5019	627935.6080		960.7446
F-16	987+56.4896	8.0000	5910.1233	2178241.2238	627930.6029		967.3289
F-17	987+63.0102	8.0000	5910.1596	2178236.9858	627925.5639		973.9132
F-18	987+69.5308	8.0000	5910.1960	2178232.7880	627920.4913		980.4976
F-19	987+76.0514	8.0000	5910.2324	2178228.6307	627915.3853		987.0819
CL PIER 4	987+82.5720	8.0000	5910.2688	2178224.5142	627910.2465	573638.4167	993.6662
F-1	987+90.3514	8.0000	5910.3122	2178219.6569	627904.0729		1001.5217
F-2	987+98.1308	8.0000	5910.3556	2178214.8584	627897.8534		1009.3771
F-3	988+05.9102	8.0000	5910.3990	2178210.1192	627891.5886		1017.2325
F-4	988+13.6896	8.0000	5910.4425	2178205.4398	627885.2790		1025.0880
F-5	988+21.4690	8.0000	5910.4859	2178200.8206	627878.9253		1032.9434
F-6	988+29.2484	8.0000	5910.5293	2178196.2620	627872.5279		1040.7988
F-7	988+37.0278	8.0000	5910.5727	2178191.7643	627866.0875		1048.6543
F-8	988+44.8072	8.0000	5910.6161	2178187.3281	627859.6047		1056.5097
F-9	988+52.5866	8.0000	5910.6595	2178182.9537	627853.0799		1064.3651
F-10	988+60.3660	8.0000	5910.7029	2178178.6415	627846.5139		1072.2206
F-11	988+68.1454	8.0000	5910.7463	2178174.3920	627839.9072		1080.0760
F-12	988+75.9248	8.0000	5910.7898	2178170.2054	627833.2604		1087.9314
F-13	988+83.7042	8.0000	5910.8332	2178166.0821	627826.5742		1095.7869
F-14	988+91.4836	8.0000	5910.8766	2178162.0226	627819.8490		1103.6423
F-15	988+99.2630	8.0000	5910.9200	2178158.0272	627813.0856		1111.4978
F-16	989+07.0424	8.0000	5910.9634	2178154.0963	627806.2844		1119.3532
F-17	989+14.8218	8.0000	5911.0068	2178150.2301	627799.4463		1127.2086
F-18	989+22.6012	8.0000	5911.0502	2178146.4292	627792.5717		1135.0641
F-19	989+30.3806	8.0000	5911.0937	2178142.6937	627785.6613		1142.9195
CL PIER 5	989+38.1600	8.0000	5911.1371	2178139.0241	627778.7157	88154.1106	1150.7749
F-1	989+43.9100	8.0000	5911.1692	2178136.3543	627773.5597		1156.5811
F-2	989+49.6600	8.0000	5911.2012	2178133.7208	627768.3851		1162.3873
F-3	989+55.4100	8.0000	5911.2333	2178131.1237	627763.1922		1168.1935
F-4	989+61.1600	8.0000	5911.2654	2178128.5631	627757.9811		1173.9997
F-5	989+66.9100	8.0000	5911.2975	2178126.0392	627752.7521		1179.8059
F-6	989+72.6600	8.0000	5911.3296	2178123.5521	627747.5056		1185.6121
F-7	989+78.4100	8.0000	5911.3617	2178121.1020	627742.2417		1191.4183
F-8	989+84.1600	8.0000	5911.3938	2178118.6888	627736.9608		1197.2245
F-9	989+89.9100	8.0000	5911.4259	2178116.3129	627731.6630		1203.0307
F-10	989+95.6600	8.0000	5911.4579	2178113.9741	627726.3486		1208.8369
F-11	990+01.4100	8.0000	5911.4900	2178111.6728	627721.0180		1214.6431
F-12	990+07.1600	8.0000	5911.5221	2178109.4090	627715.6713		1220.4493
F-13	990+12.9100	8.0000	5911.5542	2178107.1828	627710.3089		1226.2555
F-14	990+18.6600	8.0000	5911.5863	2178104.9944	627704.9309		1232.0617
F-15	990+24.4100	8.0000	5911.6184	2178102.8437	627699.5377		1237.8679
F-16	990+30.1600	8.0000	5911.6505	2178100.7310	627694.1295		1243.6741
F-17	990+35.9100	8.0000	5911.6826	2178098.6564	627688.7066		1249.4803
F-18	990+41.6600	8.0000	5911.7146	2178096.6199	627683.2693		1255.2865
F-19	990+47.4100	8.0000	5911.7467	2178094.6216	627677.8178		1261.0927
CL ABUT 6	990+53.1600	8.0000	5911.7788	2178092.6617	627672.3524	82858.2287	1266.8989
BF ABUT 6	990+56.6261	8.0000	5911.7982	2178091.4988	627669.0513	82856.9949	1270.3989
LONGITUOINAL LINE: RT. OECK EDGE							
BF ABUT 1	984+18.7012	9.7500	5908.2943	2178507.7570	628140.1417	177169.8755	627.5650
CL ABUT 1	984+22.1600	9.7500	5908.3234	2178504.6161	628138.5974	177162.7874	631.0650
F-1	984+27.0600	9.7500	5908.3635	2178500.1777	628136.3869		636.0233
F-2	984+31.9600	9.7500	5908.4024	2178495.7526	628134.1499		640.9817
F-3	984+36.8600	9.7500	5908.4401	2178491.3410	628131.8865		645.9401
F-4	984+41.7600	9.7500	5908.4765	2178486.9430	628129.5967		650.8984
F-5	984+46.6600	9.7500	5908.5117	2178482.5589	628127.2806		655.8568
F-6	984+51.5600	9.7500	5908.5456	2178478.1886	628124.9383		660.8152
F-7	984+56.4600	9.7500	5908.5783	2178473.8325	628122.5699		665.7736
F-8	984+61.3600	9.7500	5908.6097	2178469.4906	628120.1755		670.7319
F-9	984+66.2600	9.7500	5908.6399	2178465.1631	628117.7551		675.6903
F-10	984+71.1600	9.7500	5908.6688	2178460.8502	628115.3088		680.6487
F-11	984+76.0600	9.7500	5908.6966	2178456.5520	628112.8368		685.6070
F-12	984+80.9600	9.7500	5908.7239	2178452.2687	628110.3391		690.5654
F-13	984+85.8600	9.7500	5908.7513	2178448.0004	628107.8157		695.5238
F-14	984+90.7600	9.7500	5908.7786	2178443.7474	628105.2669		700.4821
F-15	984+95.6600	9.7500	5908.8059	2178439.5096	628102.6927		705.4405
F-16	985+00.5600	9.7500	5908.8333	2178435.2873	628100.0931		710.3989
F-17	985+05.4600	9.7500	5908.8606	2178431.0807	628097.4683		715.3572
F-18	985+10.3600	9.7500	5908.8880	2178426.8898	628094.8184		720.3156
F-19	985+15.2600	9.7500	5908.9153	2178422.7149	628092.1434		725.2740
CL PIER 2	985+20.1600	9.7500	5908.9427	2178418.5561	628089.4435	143354.4091	730.2323
F-1	985+26.7600	9.7500	5908.9795	2178412.9801	628085.7676		736.9110
F-2	985+33.3600	9.7500	5909.0163	2178407.4339	628082.0469		743.5896
F-3	985+39.9600	9.7500	5909.0532	2178401.9180	628078.2816		750.2682
F-4	985+46.5600	9.7500	5909.0900	2178396.4325	628074.4719		756.9468
F-5	985+53.1600	9.7500	5909.1268	2178390.9780	628070.6181		763.6254
F-6	985+59.7600	9.7500	5909.1637	2178385.5547	628066.7205		770.3040
F-7	985+66.3600	9.7500	5909.2005	2178380.1630	628062.7793		776.9827
F-8	985+72.9600	9.7500	5909.2373	2178374.8032	628058.7947		783.6613
F-9	985+79.5600	9.7500	5909.2742	2178369.4758	628054.7670		790.3399
F-10	985+86.1600	9.7500	5909.3110	2178364.1810	628050.6965		797.0185
F-11	985+92.7600	9.7500	5909.3478	2178358.9192	628046.5834		803.6971
F-12	985+99.3600	9.7500	5909.3846	2178353.6908	628042.4281		810.3758
F-13	986+05.9600	9.7500	5909.4215	2178348.4960	628038.2307		817.0544
F-14	986+12.5600	9.7500	5909.4583	2178343.3352	628033.9916		823.7330
F-15	986+19.1600	9.7500	5909.4951	2178338.2088	628029.7110		830.4116
F-16	986+25.7600	9.7500	5909.5320	2178333.1171	628025.3892		837.0902
F-17	986+32.3600	9.7500	5909.5688	2178328.0604	628021.0264		843.7689
F-18	986+38.9600	9.7500	5909.6056	2178323.0390	628016.6231		850.4475
F-19	986+45.5600	9.7500	5909.6425	2178318.0533	628012.1794		857.1261
CL PIER 3	986+52.1600	9.7500	5909.6793	2178313.1036	628007.6956	116132.3250	863.8047
F-1	986+58.5981	9.7500	5909.7152	2178308.3103	628003.2836		870.3195
F-2	986+65.0361	9.7500	5909.7512	2178303.5519	627998.8340		876.8342
F-3	986+71.4742	9.7500	5909.7871	2178298.8286	627994.3471		883.3490
F-4	986+77.9123	9.7500	5909.8230	2178294.1407	627989.8231		889.8637
F-5	986+84.3503	9.7500	5909.8589	2178289.4886	627985.2625		896.3785
F-6	986+90.7884	9.7500	5909.8949	2178284.8725	627980.6654		902.8932
F-7	986+97.2264	9.7500	5909.9308	2178280.2927	627976.0321		909.4080
F-8	987+03.6645	9.7500	5909.9667	2178275.7495	627971.3630		915.9227
F-9	987+10.1026	9.7500	5910.0026	2178271.2432	627966.6582		922.4375
F-10	987+16.5406	9.7500	5910.0386	2178266.7740	627961.9182		928.9522
F-11	987+22.9787	9.7500	5910.0745	2178262.3422	627957.1431		935.4670
F-12	987+29.4168	9.7500	5910.1104	2178257.9481	627952.3334		941.9817
F-13	987+35.8548	9.7500	5910.1464	2178253.5920	627947.4892		948.4965
F-14	987+42.2929	9.7500	5910.1823	2178249.2741	627942.6109		955.0112
F-15	987+48.7309	9.7500	5910.2182	2178244.9947	627937.6988		961.5260
F-16	987+55.1690	9.7500	5910.2541	2178240.7541	627932.7532		968.0407
F-17	987+61.6071	9.7500	5910.2901	2178236.5525	627927.7744		974.5555
F-18	987+68.0451	9.7500	5910.3260	2178232.3902	627922.7627		981.0702
F-19	987+74.4832	9.7500	5910.3619	2178228.2675	627917.7185		987.5850
CL PIER 4	987+80.9213	9.7500	5910.3978	2178224.1845	627912.6419	573635.9986	994.0997
F-1	987+88.7832	9.7500	5910.4417	2178219.2529	627906.3993		1002.0553
F-2	987+96.6451	9.7500	5910.4856	2178214.3815	627900.1096		1010.0109
F-3	988+04.5071	9.7500	5910.5295	2178209.5707	627893.7734		1017.9665
F-4	988+12.3690	9.7500	5910.5733	2178204.8210	627887.3913		1025.9221
F-5	988+20.2309	9.7500	5910.6172	2178200.1329	627880.9638		1033.8777
F-6	988+28.0929	9.7500	5910.6611	2178195.5067	627874.4917		1041.8333
F-7	988+35.9548	9.7500	5910.7050	2178190.9428	627867.9754		1049.7889
F-8	988+43.8168	9.7500	5910.7488	2178186.4418	627861.4155		1057.7444
F-9	988+51.6787	9.7500	5910.7927	2178182.0040	627854.8128		1065.7000
F-10	988+59.5406	9.7500	5910.8366	2178177.6298	627848.1677		1073.6556
F-11	988+67.4026	9.7500	5910.8805	2178173.3196	627841.4809		1081.6112
F-12	988+75.2645	9.7500	5910.9243	2178169.0738	627834.7530		1089.5668
F-13	988+83.1264	9.7500	5910.9682	2178164.8929	627827.9846		1097.5224
F-14	988+90.9884	9.7500	5911.0121	2178160.7772	627821.1764		1105.4780
F-15	988+98.8503	9.7500	5911.0559	2178156.7270	627814.3290		1113.4336
F-16	989+06.7123	9.7500	5911.0998	2178152.7429	627807.4430		1121.3892
F-17	989+14.5742	9.7500	5911.1437	2178148.8250	627800.5190		1129.3447
F-18	989+22.4361	9.7500	5911.1876	2178144.9738	627793.5577		1137.3003
F-19	989+30.2981	9.7500	5911.2314	2178141.1897	627786.5598		1145.2559
CL PIER 5	989+38.1600	9.7500	5911.2753	2178137.4729	627779.5258	88152.3606	1153.2115
F-1	989+43.9100	9.7500	5911.3074	2178134.7975	627774.3589		1159.0300
F-2	989+49.6600	9.7500	5911.3395	2178132.1584	627769.1734		1164.8485
F-3	989+55.4100	9.7500	5911.3716	2178129.5558	627763.9694		1170.6670
F-4	989+61.1600	9.7500	5911.4037	2178126.9898	627758.7473		1176.4855
F-5	989+66.9100	9.7500	5911.4358	2178124.4606	627753.5073		1182.3040
F-6	989+72.6600	9.7500	5911.4678	2178121.9682	627748.2497		1188.1225
F-7	989+78.4100	9.7500	5911.4999	2178119.5128	627742.9746		1193.9410
F-8	989+84.1600	9.7500	5911.5320	2178117.0946	627737.6825		1199.7594
F-9	989+89.9100	9.7500	5911.5641	2178114.7136	627732.3735		1205.5779
F-10	989+95.6600	9.7500	5911.5962	2178112.3699	627727.0479		1211.3964
F-11	990+01.4100	9.7500	5911.6283	2178110.0637	627721.7060		1217.2149
F-12	990+07.1600	9.7500	5911.6604	2178107.7951	627716.3480		1223.0334
F-13	990+12.9100	9.7500	5911.6925	2178105.5642	627710.9742		1228.8519
F-14	990+18.6600	9.7500	5911.7245	2178103.3711	627705.5848		1234.6704
F-15	990+24.4100	9.7500	5911.7566	2178101.2159	627700.1802		1240.4889
F-16	990+30.1600	9.7500	5911.7887	2178099.0988	627694.7606		1246.3074
F-17	990+35.9100	9.7500	5911.8208	2178097.0197	627689.3262		1252.1259
F-18	990+41.6600	9.7500	5911.8529	2178094.9789	627683.8774		1257.9444
F-19	990+47.4100	9.7500	5911.8850	2178092.9764	627678.4143		1263.7629
CL ABUT 6	990+53.1600	9.7500	5911.9171	2178091.0123	627672.9374	82856.4787	1269.5814
BF ABUT 6	990+56.6188	9.7500	5911.9364	2178089.8494	627669.6362	82855.2449	1273.0814

ISSUED FOR CONSTRUCTION

7-9-90

NOTE: ELEVATIONS ARE AT TOP OF CONCRETE DECK 0.1667 FEET BELOW FINISHED GRADE.

DIVISION OF HIGHWAYS

I-25/470 INTERCHANGE

RAMP E FLYOVER

BRIDGE DECK ELEVATIONS

E-470

Engineer 470 Partnership

Designer	J. Stapleton	Structure Numbers	F-17-JW
Detailer	D. Kurschinski		
Drawing Number	B-44 of 45 Drawings		

Revision Dates (Preliminary Stage Only)

DESIGNED BY	CHECKED BY	DETAILED BY	INITIAL	DATE	CHECKED BY	QUANTITIES BY	CHECKED BY

30-MAR-1990 18:25

DGN$SPEC••••••••••••••••••

UDA2:[200,32]SEBDE0114.90X

AS CONSTRUCTED			
NO REVISIONS		REVISED	VOID

FEDERAL ROAD REGION NO.	DIVISION	PROJECT NUMBER	SHEET NUMBER
VIII	COLORADO	1A06/1802	155

REVISIONS		
- -		
- -		
- -		

ROADWAY APPROACHES

ELEVATIONS ARE AT FINISHED GRADE

STATION	OFFSETS			
	-19.0000	-15.0000	0.0000	8.0000
990+50.0	5909.79	5910.11	5911.30	5911.93
+60.0	09.85	10.17	11.35	11.98
+70.0	09.91	10.22	11.41	12.04
+80.0	09.96	10.28	11.46	12.10
990+90.0	5910.02	5910.33	5911.52	5912.15
991+00.0	10.07	10.39	11.57	12.21
+10.0	10.13	10.45	11.63	12.26
+20.0	10.19	10.50	11.69	12.32
991+30.0	5910.24	5910.56	5911.74	5912.37
+40.0	10.30	10.61	11.80	12.43
+50.0	10.35	10.67	11.85	12.49
+60.0	10.41	10.72	11.91	12.54
991+70.0	5910.46	5910.78	5911.97	5912.60
+80.0	10.52	10.84	12.02	12.65
+90.0	10.58	10.89	12.08	12.71
992+00.0	10.63	10.95	12.13	12.76

STATION	OFFSETS			
	-19.0000	-15.0000	0.0000	8.0000
982+70.0	5904.35	5904.67	5905.85	5906.49
+80.0	04.51	04.83	06.01	06.64
+90.0	04.67	04.98	06.17	06.80
983+00.0	04.82	05.13	06.32	06.95
983+10.0	5904.96	5905.28	5906.46	5907.09
+20.0	05.10	05.41	06.60	07.23
+30.0	05.23	05.55	06.73	07.36
+40.0	05.36	05.68	06.86	07.49
983+50.0	5905.48	5905.80	5906.98	5907.62
+60.0	05.60	05.92	07.10	07.73
+70.0	05.71	06.03	07.22	07.85
+80.0	05.82	06.14	07.32	07.95
983+90.0	5905.92	5906.24	5907.43	5908.06
984+00.0	06.02	06.34	07.52	08.15
+10.0	06.11	06.43	07.61	08.25
+20.0	06.20	06.52	07.70	08.33

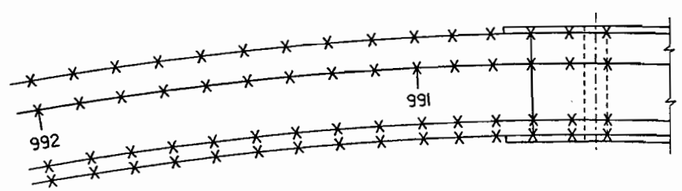

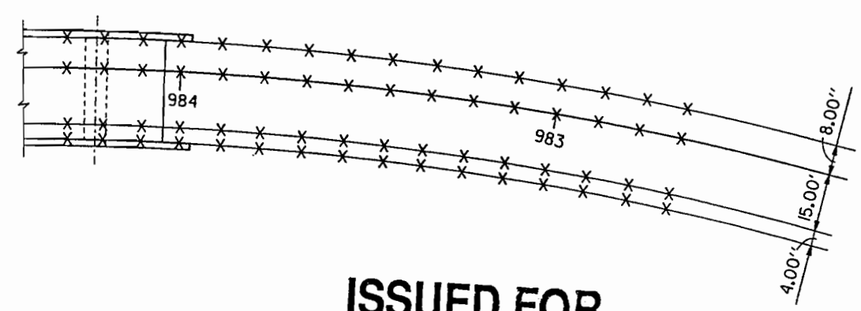

ISSUED FOR CONSTRUCTION

7-9-90

	INITIAL	
Designed By	JS	1-90
Checked By	AEG	1-90
Detailed By	AEG	1-90
Checked By		
Quantities By		
Checked By		

E-470

Engineer 470 Partnership

DIVISION OF HIGHWAYS

I-25/470 INTERCHANGE
RAMP E FLYOVER
ROADWAY APPROACHES

Designer J. STAPLETON	Structure Numbers	F - 17 - JW
Detailer A. GRIFFITH		
Drawing Number B-45 of 45 Drawings		

$$$$$DGNSPEC$$$$$$$$$$$$$$$$
USERNAME
$$$$$$SYTIME$$$$$$

ROADWAY APPROACHES

SERWX0113 90X