GENERAL NOTES

ALL EXPOSED CONCRETE SURFACES OF THE SUPERSTRUCTURE, DOWN TO 1'-0" BELOW FINISHED GRADE, SHALL BE FINISHED WITH A CLASS 1 FINISH, FOLLOWED BY AN APPLICATION OF COLORED COATING MEETING THE REQUIREMENTS IN SUBSECTION 601 CONCRETE COATING. A COLORED CONCRETE COATING FINISH WILL BE REQUIRED ON ALL DESIGNATED CONCRETE SURFACES. THE ACCENT COLOR FOR THE EXTERIOR CONCRETE GIRDERS SHALL BE STANDARD 595 B, COLOR NO 20400. THE REST OF THE BRIDGE, INCLUDING THE ABUTMENTS, PIERS, WALLS AND BARRIERS, SHALL BE LIGHT TAN, EQUIVALENT TO FEDERAL STANDARD 595 B, COLOR NO 33711. COLORS WILL BE SELECTED FROM TEST PANELS PROVIDED BY THE CONTRACTOR.

THE FOLLOWING STRUCTURAL STEEL SHALL BE AASHTO M-183 (ASTM A-36): DIAPHRAGMS, LATERAL BRACING, BEARING DEVICES AND BEARING PLATES.

THE FOLLOWING STRUCTURAL STEEL SHALL BE AASHTO M-223 GRADE 50 (ASTM A-572 GRADE 50): PILING.

ALL BOLTS SHALL BE 7/8" DIAMETER, HIGH STRENGTH, ASTM A325 UNLESS OTHERWISE NOTED.

GRADE 60 REINFORCING STEEL IS REQUIRED.

ALL REINFORCING STEEL SHALL BE BLACK REINFORCING UNLESS OTHERWISE NOTED.

(E) DENOTES EPOXY-COATED REINFORCING STEEL.

CHAMFER ALL EXPOSED EDGES OF CONCRETE 3/4" UNLESS OTHERWISE NOTED.

LEVELING PADS ARE UNLAMINATED BEARINGS . THEY SHALL BE CUT OR MOLDED FROM AASHTO ELASTOMER GRADE 3, 4 OR 5 AS DESCRIBED IN TABLES 705-1 AND 705-2 OF THE STANDARD SPECIFICATIONS WITH A DUROMETER (SHORE "A") HARDNESS OF 60.

UNLESS OTHERWISE NOTED, ALL CLEAR CONCRETE COVER OVER REINFORCING BARS SHALL BE 2 INCHES.

UNLESS OTHERWISED NOTED, ALL CONSTRUCTION JOINTS SHALL BE INTENTIONALLY ROUGHENED TO 1/4" AMPLITUDE.

THE FOLLOWING TABLE GIVES THE MINIMUM LAP SPLICE LENGTH FOR REINFORCING BARS PLACED IN ACCORDANCE WITH SUBSECTION 602.06

		BAR SIZE							
	CONCRETE	#4	#5	#6	#7	#8	#9	#10	#11
EPOXY	CLASS B	1'-7"	2'-0"	2'-7"	3'-6"	4'-7"	5'-9"	7'-3"	8'-11"
COATED	CLASS D	1'-7"	2'-0"	2'-5"	2'-10"	3'-9"	4'-8"	5'-11"	7'-4"
BLACK	CLASS B	1'-1"	1'-4"	1'-9"	2'-4"	3'-1"	3'-10"	4'-10"	6'-0"
REBAR	CLASS D	1'-1"	1'-4"	1'-7"	1'-11"	2'-6"	3'-2"	4'-0"	4'-11"

THESE SPLICES SHALL BE MODIFIED BY THE FOLLOWING FACTORS WHEN:

- REINFORCING IS SPACED BY LESS THAN 6" ON CENTER.....1.25
- TOP REINFORCEMENT - SO PLACED THAT MORE THAN 12" OF CONCRETE IS CAST BELOW THE REINFORCEMENT

  EPOXY COATED.....1.15

  BLACK BARS.....1.40

MECHANICAL COUPLERS SHALL PRODUCE 125% OF REBAR STRENGTH.

THE ABOVE SPLICE LENGTHS SHALL BE INCREASED BY 20 PERCENT FOR 3 BAR BUNDLES AND 33 PERCENT FOR 4 BAR BUNDLES.

THE CONTRACTOR SHALL BE RESPONSIBLE FOR THE STABILITY OF THE STRUCTURE DURING CONSTRUCTION.

STATIONS, ELEVATIONS, AND DIMENSIONS CONTAINED IN THESE PLANS ARE CALCULATED FROM A RECENT FIELD SURVEY. THE CONTRACTOR SHALL VERIFY ALL DEPENDENT DIMENSIONS IN THE FIELD BEFORE ORDERING OR FABRICATING ANY MATERIAL.

CONTRACTOR SHALL FOLLOW THE DIG SAFE PROGRAM ESTABLISHED FOR THIS PROJECT.

DESIGN DATA

AASHTO, SPECIFICATION 16TH EDITION WITH 1997, 1998, 1999 AND 2000 INTERIMS.

DESIGN METHOD: LOAD FACTOR DESIGN.

REINFORCED CONCRETE:
CLASS D CONCRETE: f'c = 4,500 psi (INCLUDES INTEGRAL ABUT, DIAPH & CAP)
REINFORCING STEEL: fy = 60,000 psi

CAISSON CONCRETE:
CLASS BZ CONCRETE: f'c = 4,000 OR 5,000 psi
REINFORCING STEEL: fy = 60,000 psi

STRUCTURAL STEEL: AASHTO M-183 (ASTM A-36) Fy = 36,000.
AASHTO M-223 (ASTM A-572) Fy = 50,000.

PRESTRESSED CONCRETE:
CLASS PS CONCRETE: f'c = (SEE DETAILS ON BT SHEETS)
f's = 270,000 psi (LOW RELAXATION)

TRANSITION SLAB:
CLASS D CONCRETE: f'c = 4,500 psi

LRT: DESIGN DATA

SPECIFICATIONS
THE RTD SOUTHEAST CORRIDOR DESIGN CRITERIA, SECTION 3-CIVIL AND STRUCTURAL ENGINEERING, SUPPLEMENTED BY 1996 AASHTO "STANDARD SPECIFICATIONS FOR HIGHWAY BRIDGES", SIXTEENTH EDITION W/ITERINS THRU 2000.

DEAD LOADS:
ASSUMES 600 LBS FOR TRACK RAILS, INSIDE GUARDRAILS AND FASTENERS FOR TWO TRACKS
ASSUMES 6580 LBS PER LIN. FT. FOR CURBS, CONCRETE TIES, BALLAST, DUCTBANK AND SAFETY FENCE.

LIVE LOADS:
SIEMENS-DUEWAG LIGHT RAIL VEHICLE AS SHOWN ON THIS SHEET

INDEX OF DRAWINGS

DWG NO	DESCRIPTION
S101	GENERAL NOTES
S102	GENERAL LAYOUT
S103	TYPICAL SECTION
S104	ENGINEERING GEOLOGY
S105	CONSTRUCTION LAYOUT
S106	CAISSON & PILING LAYOUT
S107	CAISSON DETAILS
S108	ABUTMENT 1 DETAILS
S109	ABUTMENT 3 DETAILS
S110	PIER 2 DETAILS
S111	BT54 GIRDER
S112	INTERMEDIATE DIAPHRAGM DETAILS (NOT USED)
S113	PIER DIAPHRAGM DETAILS
S114	OCS POLE FOUNDATION DETAILS
S115	PRECAST PANEL DECK FORM (1)
S116	PRECAST PANEL DECK FORM (2)
S117	SUPERSTRUCTURE DETAILS
S118	PROTECTIVE FENCE DETAILS
S119	TRANSITION SLAB DETAILS
S120	DRAINAGE DETAILS
S121	WATERPROOFING DETAILS
S122	BRIDGE DECK ELEVATIONS
S123	TPSS CONDUIT DETAILS

BRIDGE DESCRIPTION

2 SPAN (90'-0", 90'-0") BRIDGE,
TWO TANGENT TRACKS ON BALLAST
PRECAST PRESTRESSED CONCRETE BULB TEE GIRDER

LRT BRIDGE OVER C470.
CONSTANT WIDTH = 32'-0" SKEW ANGLE = 0°
36" BRIDGE PROTECTIVE FENCE

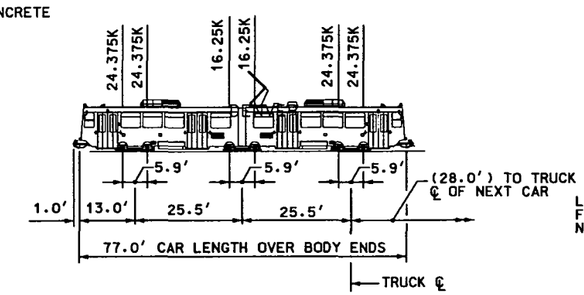

LIVE LOADING DIAGRAM

(NTS)

SIEMENS DUEWAG LIGHT RAIL VEHICLE
NOTE: A MAXIMUM OF FOUR CARS MAY BE COUPLED.

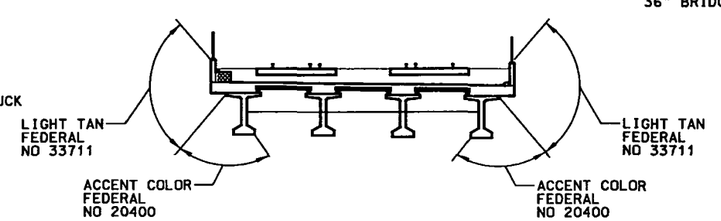

SUPERSTRUCTURE CONCRETE COATING

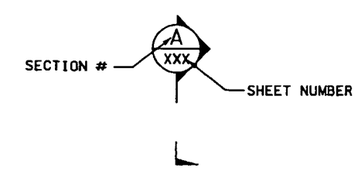

SECTION

ISSUE RECORD		
NO.	DESCRIPTION	DATE
A	IN-PROCESS DESIGN SUBMITTAL	24SEP02
B	FINAL DESIGN SUBMITTAL	30OCT02
1	APPROVED FOR CONSTRUCTION	22NOV02
AB	AS-BUILT	01FEB07

DESIGNED BY: MDV
DRAFTED BY: KJS
CHECKED BY: DDH

TREX METRO DENVER / COLORADO
Southeast Corridor Constructors, 7200 South Alton Way, Englewood, CO 80112

DMJM HARRIS, 717 17th Street, Suite 500, Denver, Colorado 80202, Phone: (303) 376-2900, Fax: (303) 376-2999

SOUTHEAST CORRIDOR MULTI-MODAL PROJECT
AREA 3.3
LRT OVER C-470
GENERAL NOTES

STRUCTURE NO F-17-OW | SECC STRUCTURE NO 65

PROJECT NO./CODE NH 0252-299 11584
FILE NAME SE3B0303
DRAWING NUMBER S101

AS-BUILT

File Name: C:\PWWORKING\DMS04496\SE3B0303.DGN
User: PAUL.NIKOLAI
Pen Table: S:\MICROSTATION\PLOTTING\PENTABLES\T-REX-GRAY.TBL
Date Plotted: 02/01/2007
Time Plotted: 07:29:46 AM

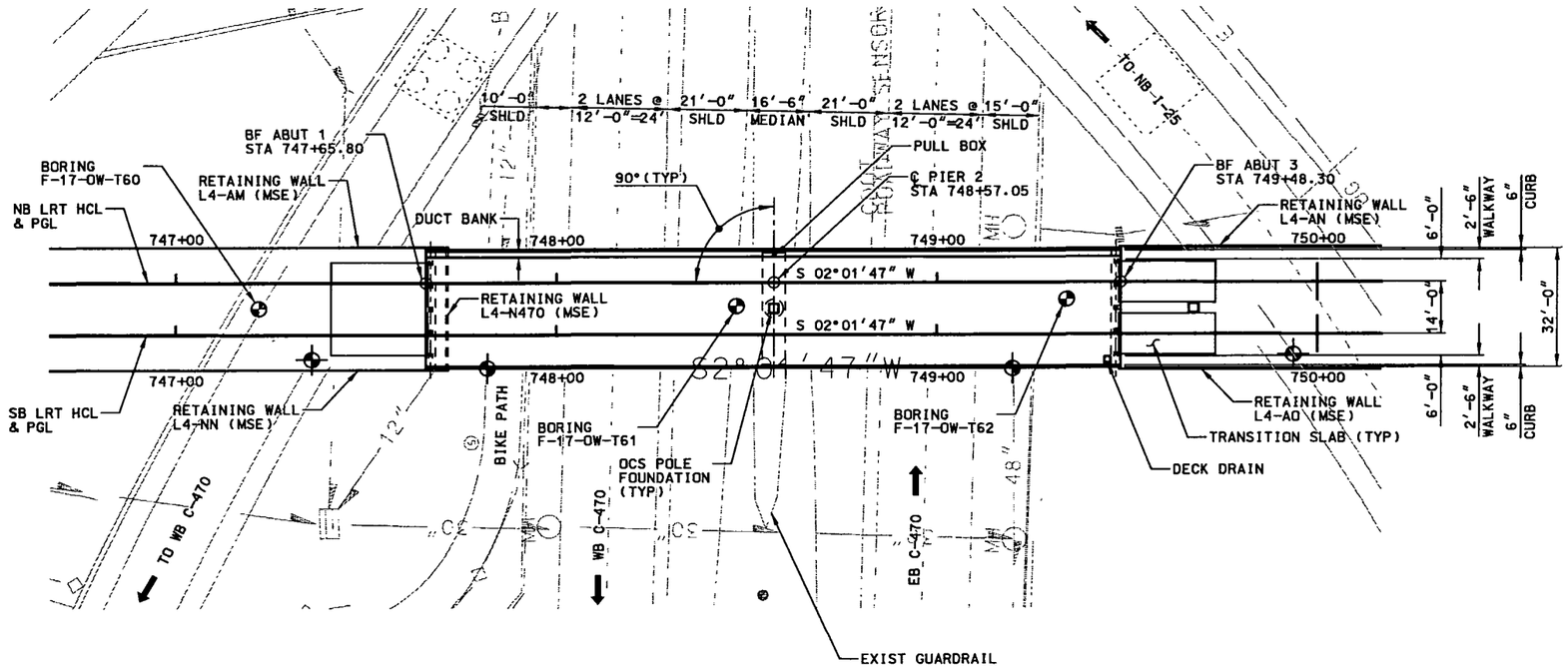

PLAN

INDICATES LOCATION OF MINIMUM CLEARANCE.

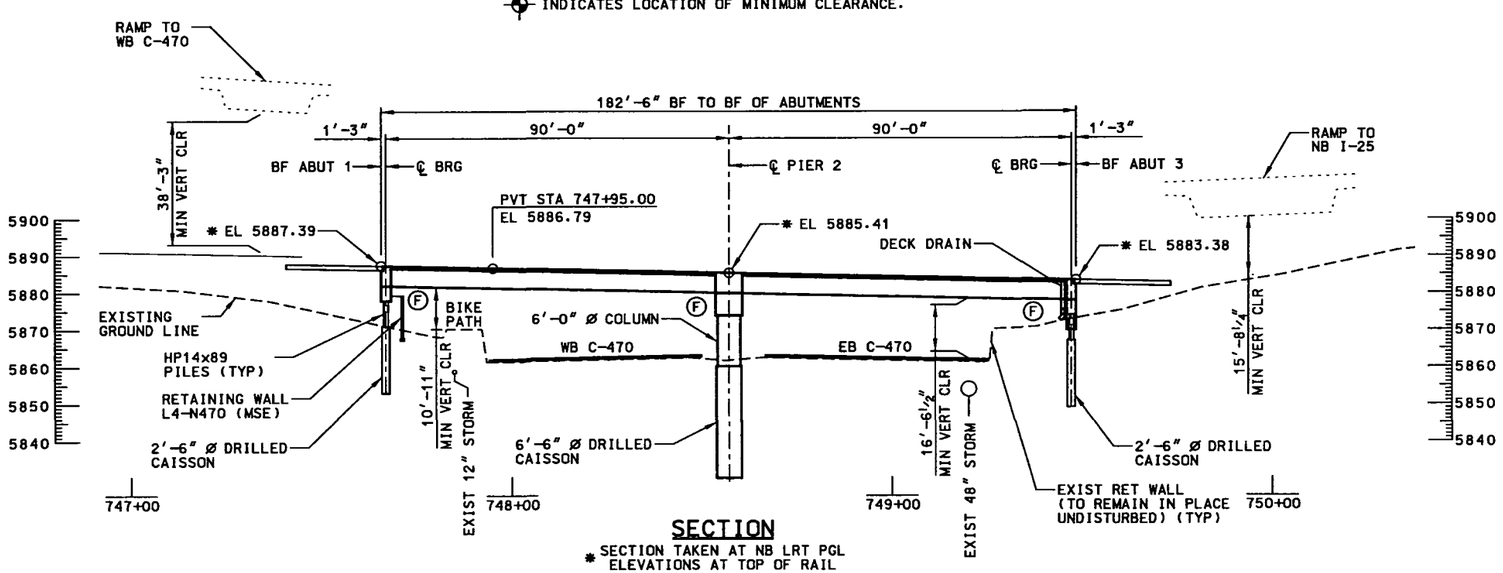

SECTION

* SECTION TAKEN AT NB LRT PGL ELEVATIONS AT TOP OF RAIL

LRT NB

POINT TYPE	STATION	NORTH (Y)	EAST (X)
ST	745+74.59	626019.42	996452.59
TS	751+39.67	625454.70	996432.57

LRT SB

POINT TYPE	STATION	NORTH (Y)	EAST (X)
ST	BK=745+67.94	626019.92	996438.60
ST	AHD=745+74.59	626019.92	996438.60
TS	751+40.30	625454.57	996418.56

DESIGNED BY: MDV
DRAFTED BY: KJS
CHECKED BY: DDH

ISSUE RECORD

NO.	DESCRIPTION	DATE
A	PRELIMINARY DESIGN SUBMITTAL	02 AUG 02
B	IN-PROCESS DESIGN SUBMITTAL	24 SEP 02
C	FINAL DESIGN SUBMITTAL	30 OCT 02
1	APPROVED FOR CONSTRUCTION	22 NOV 02
AB	AS-BUILT	01FEB07

TREX METRO DENVER / COLORADO

Southeast Corridor Constructors
7200 South Alton Way
Englewood, CO 80112

DMJM HARRIS
717 17th Street, Suite 500
Denver, Colorado 80202
Phone: (303) 376-2900
Fax: (303) 376-2999

SOUTHEAST CORRIDOR MULTI-MODAL PROJECT

AREA 3.3
LRT OVER C-470
GENERAL LAYOUT

STRUCTURE NO F-17-OW
SECC STRUCTURE NO 65

PROJECT NO./CODE NH 0252-299 11584
FILE NAME SE3B2301
DRAWING NUMBER S102

AS-BUILT

File Name: C:\PWWORKING\DMS04496\SE3B2301.DGN
User: PAUL.NIKOLAI
Time Plotted: 07:29:56 AM
Date Plotted: 02/01/2007
Pen Table: S:\MICROSTATION\PLOTTING\PENTABLES\T-REX-GRAY.TBL

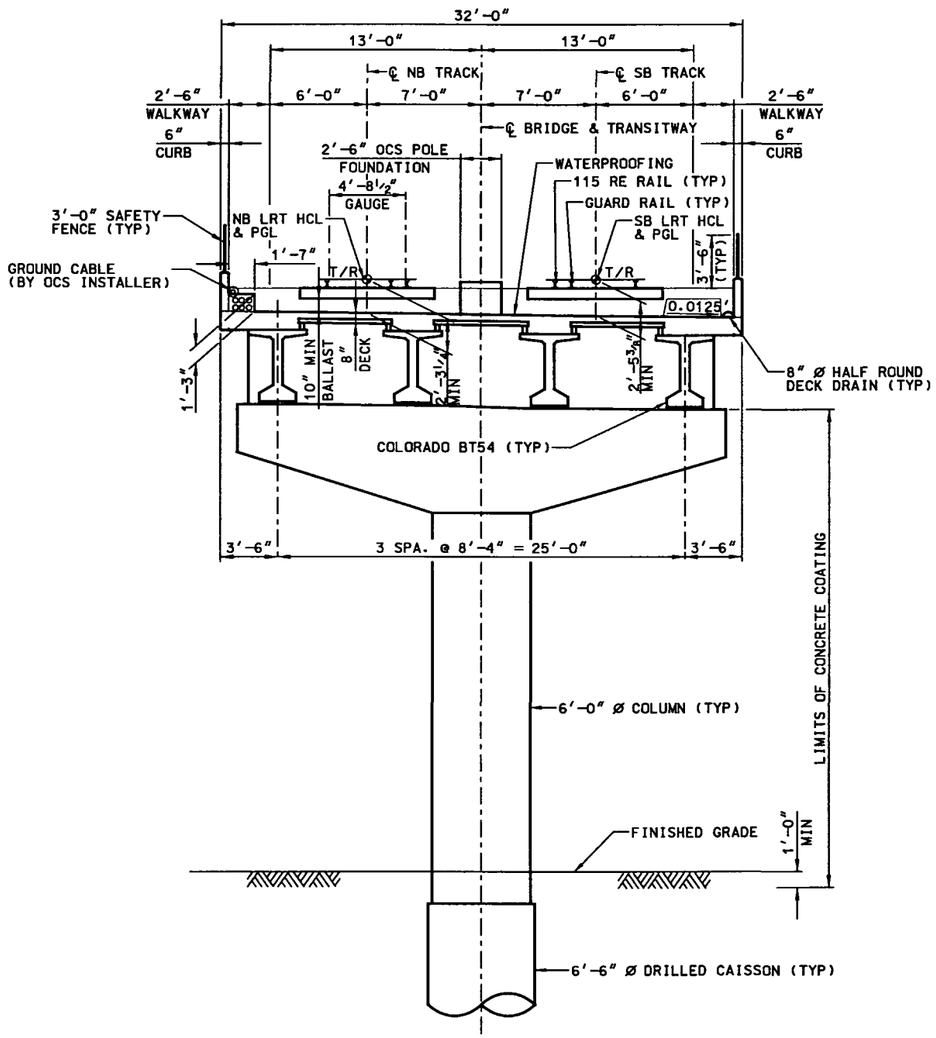

TYPICAL SECTION @ PIER

(LOOKING AHEAD STATION)

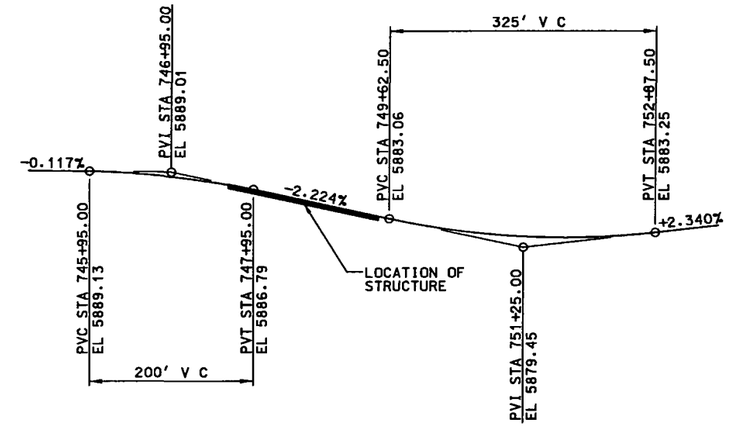

SB & NB LRT PROFILE

NOTES:

1. SEE LRT SYSTEM WIDE ELECTRICAL DRAWINGS FOR NUMBER, SIZE AND PLACEMENT OF CONDUITS IN CONCRETE DUCTBANK.
2. SEE LRT SYSTEM WIDE ELECTRICAL DRAWINGS FOR LOCATION OF DUCTBANK MANHOLES AND FOR MANHOLE DETAILS.
3. SEE LRT SYSTEM WIDE ELECTRICAL DRAWINGS FOR DUCTBANK ACCESS PANELS AND PULLBOX LOCATIONS AND DETAILS.
4. THE DIAPHRAGM BETWEEN GIRDERS AND INSIDE SURFACES OF THE GIRDERS DO NOT RECEIVE COLORED CONCRETE COATING. SEE GENERAL NOTES SHEET FOR CONCRETE COATING NOTE.
5. SEE LRT SYSTEM WIDE ELECTRICAL DRAWINGS FOR DUCT BANK EXPANSION JOINT DETAILS AND SEE PSP317 "BRIDGE DUCT BANK ABUTMENT DETAILS" FOR ROUTING TRANSITIONS AT BRIDGE ENDS.
6. SEE PSP340 "SCHEMATIC OVERVIEW FOR BRIDGE GROUNDING" FOR THE OCS AND PROTECTIVE FENCE GROUNDING DETAILS.

DESIGNED BY: MDV
DRAFTED BY: KJS
CHECKED BY: DDH

ISSUE RECORD

NO.	DESCRIPTION	DATE
B	IN-PROCESS DESIGN SUBMITTAL	24SEP02
C	FINAL DESIGN SUBMITTAL	30OCT02
1	APPROVED FOR CONSTRUCTION	22NOV02
2	APPROVED FOR CONSTRUCTION - LRT PROFILE REVISED	20DEC02
AB	AS-BUILT	01FEB07

T-REX METRO DENVER / COLORADO
Southeast Corridor Constructors 7200 South Alton Way Englewood, CO 80112
DMJM HARRIS 717 17th Street, Suite 500 Denver, Colorado 80202 Phone: (303) 376-2900 Fax: (303) 376-2999

SOUTHEAST CORRIDOR MULTI-MODAL PROJECT
AREA 3.3
LRT OVER C-470
TYPICAL SECTION

STRUCTURE NO F-17-OW | SECC STRUCTURE NO 65

PROJECT NO./CODE NH 0252-299 11584
FILE NAME SE3B8301
DRAWING NUMBER S103

AS-BUILT

File Name: C:\PWWORKING\DMS04496\SE3B8301.DGN
User: PAUL.NIKOLAI
Time Plotted: 07:31:11 AM
Date Plotted: 02/01/2007
Pen Table: S:\MICROSTATION\PLOTTING\PENTABLES\T-REX-GRAY.TBL

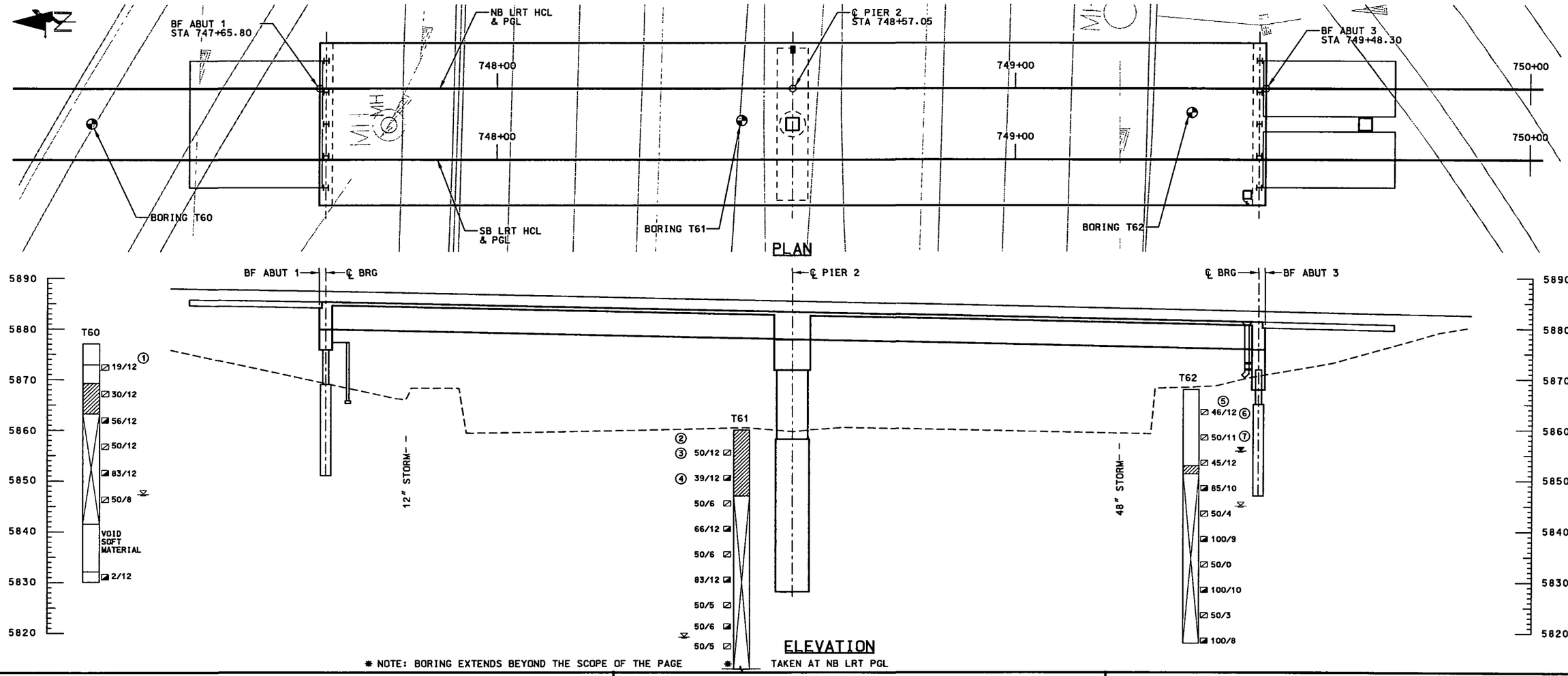

* NOTE: BORING EXTENDS BEYOND THE SCOPE OF THE PAGE

SUMMARY OF SELECTED TEST RESULTS

BORING	REF SAMPLE	ELEVATION (FT)	USCS CLASSIFICATION	GRADING ANALYSIS PERCENT GRAVEL	SAND	SILT AND CLAY	ATTERBERG LIMITS LL	PI	WATER CONT %	DRY UNIT WEIGHT PCF	UNCONFINED COMPRESSIVE STRENGTH PSF	SWELL (%)
T60	1	5877	CH		39	61	51	30				
T61	2	5856							22	102		1.8
T61	3	5851	CL			41	39	16	17			
T61	4	5846							19	100		1.5
T62	5	5868	SC	2	76	22	NP	NP				
T62	6	5864							8	105		-0.4
T62	7	5859							7	104		-0.3

TYPE OF MATERIAL

- FILL MATERIAL
- CLAY: SANDY TO VERY SANDY, LOW TO MEDIUM PLASTIC, MEDIUM STIFF, VERY MOIST, BROWN
- SAND: CLAYEY
- SAND: SILTY WITH SOME GRAVEL, FINE TO COARSE GRAINED, LOOSE TO MEDIUM DENSE, BROWN, DRY TO MOIST
- WEATHERED CLAYSTONE/SILTSTONE
- CLAYSTONE/SILTSTONE/SANDSTONE BEDROCK: MEDIUM TO HIGH PLASTIC, MEDIUM TO VERY HARD, MOIST, GRAY TO BROWN AND GRAY TO BLUE WITH SOME IRON STAINING

LEGEND

- 23/12 — DRIVE SAMPLE BLOW COUNT, INDICATES BLOWS PER FOOT (E G 23) OR BLOWS PER INCHES (E G 50/2") OF A 140-POUND HAMMER FALLING 30 INCHES
- SHELBY TUBE, 2½ INCH I D
- CORE SAMPLE
- DRIVE SAMPLE, 2-INCH I D CALIFORNIA LINER SAMPLE
- DRIVE SAMPLE, STANDARD SPLIT SPOON
- DRIVE SAMPLE, 2-1/2 INCH I D RING SAMPLE
- SW-15 — INDICATES TEST HOLE NUMBER AND APPROXIMATE LOCATION
- GROUND WATER LEVEL WHEN MEASURED

DESIGNED BY: MDV
DRAFTED BY: KJS
CHECKED BY: DDH

ISSUE RECORD

NO.	DESCRIPTION	DATE
A	IN-PROCESS DESIGN SUBMITTAL	24 SEP 02
B	FINAL DESIGN SUBMITTAL	30 OCT 02
1	APPROVED FOR CONSTRUCTION	22 NOV 02
AB	AS-BUILT	01FEB07

T-REX METRO DENVER / COLORADO

Southeast Corridor Constructors
7200 South Alton Way
Englewood, CO 80112

Terracon
Delivering Success for Clients and Employees
10625 W. Frontage Road
Suite 3
Wheat Ridge, CO 80033

SOUTHEAST CORRIDOR MULTI-MODAL PROJECT
AREA 3.3
LRT OVER C-470
ENGINEERING GEOLOGY

STRUCTURE NO F-17-OW | SECC STRUCTURE NO 65

PROJECT NO./CODE NH 0252-299 11584
FILE NAME SE3B2302
DRAWING NUMBER S104

AS-BUILT

File Name: C:\PWWORKING\DMS04496\SE3B2302.DGN
User: PAUL.NIKOLAI
Date Plotted: 02/01/2007
Time Plotted: 07:30:17 AM
Pen Table: S:\MICROSTATION\PLOTTING\PENTABLES\T-REX-GRAY.TBL

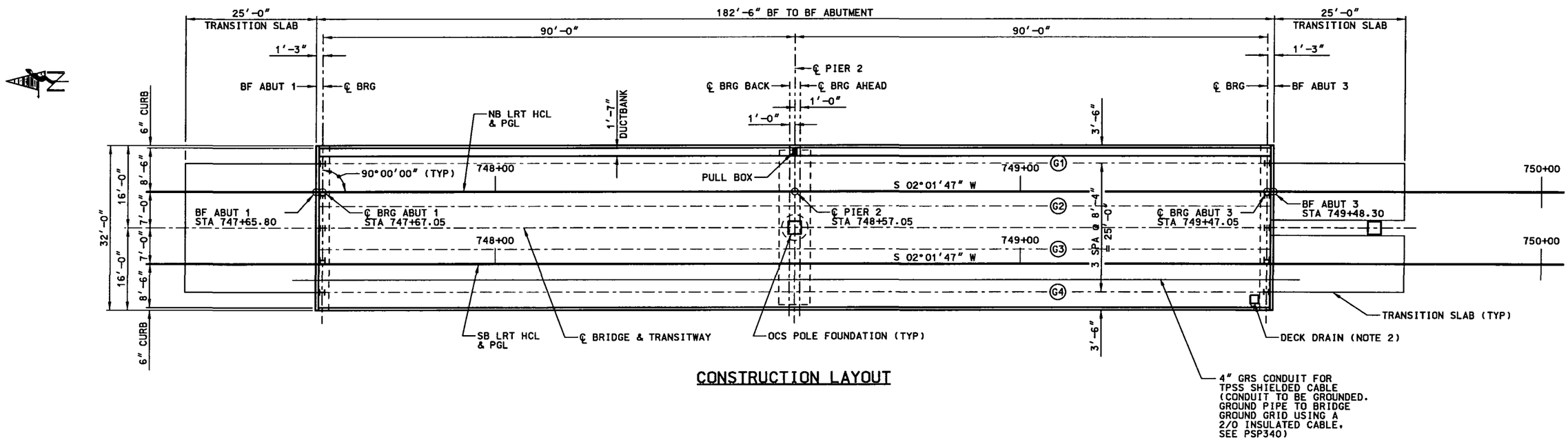

CONSTRUCTION LAYOUT

NOTES:

1. INTERMEDIATE DIAPHRAGMS MAY BE ELIMINATED IF CONTRACTOR PROVIDES ALTERNATE DESIGN FOR BRACING GIRDERS DURING CONSTRUCTION.
2. SEE DRAINAGE DETAIL SHEET FOR DRAINAGE DETAILS.
3. SEE LRT SYSTEM WIDE ELECTRICAL DRAWINGS FOR DUCTBANK ACCESS PANELS AND PULL BOX LOCATIONS AND DETAILS.
4. GROUND ROD SHALL BE INSTALLED BEFORE CONSTRUCTION OF MSE WALL.

DESIGNED BY: MDV
DRAFTED BY: KJS
CHECKED BY: DDH

ISSUE RECORD

NO.	DESCRIPTION	DATE
A	IN-PROCESS DESIGN SUBMITTAL	24SEP02
B	FINAL DESIGN SUBMITTAL	30OCT02
1	APPROVED FOR CONSTRUCTION	22NOV02
AB	AS-BUILT	01FEB07

TREX METRO DENVER / COLORADO

Southeast Corridor Constructors
7200 South Alton Way
Englewood, CO 80112

DMJM HARRIS
717 17th Street, Suite 500
Denver, Colorado 80202
Phone: (303) 376-2900
Fax: (303) 376-2999

SOUTHEAST CORRIDOR MULTI-MODAL PROJECT
AREA 3.3
LRT OVER C-470
CONSTRUCTION LAYOUT

STRUCTURE NO F-17-OW
SECC STRUCTURE NO 65

PROJECT NO./CODE
NH 0252-299
11584

FILE NAME SE3B3301

DRAWING NUMBER S105

AS-BUILT

File Name: C:\PWWORKING\DMS04496\SE3B3301.DGN
User: PAUL.NIKOLAI
Time Plotted: 07:30:26 AM
Date Plotted: 02/01/2007
Pen Table: S:\MICROSTATION\PLOTTING\PENTABLES\T-REX-GRAY.TBL

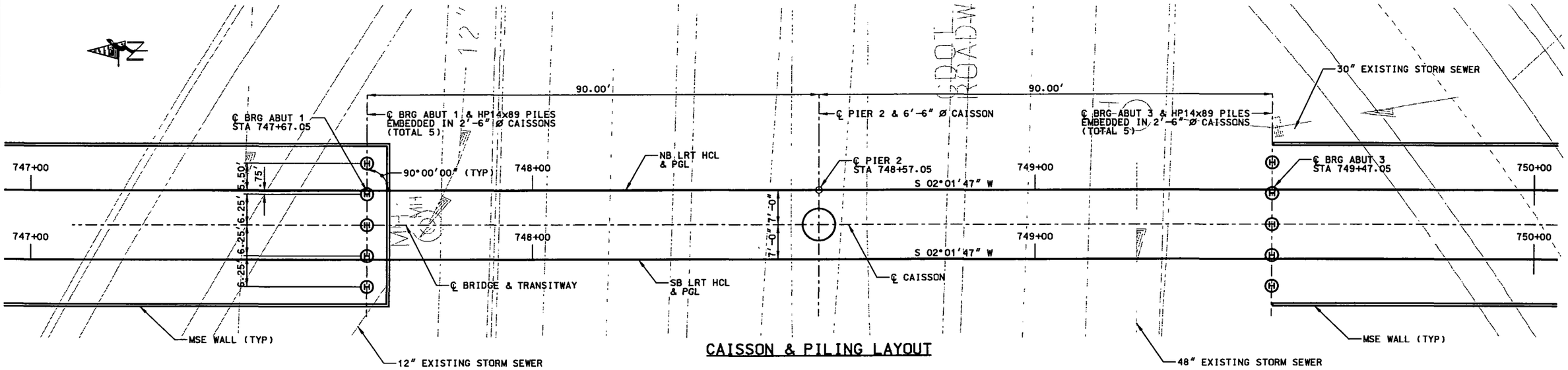

CAISSON & PILING LAYOUT

LOCATION	CAISSON DIAMETER	ESTIMATED CAISSON TIP ELEV (FT)	TOP OF PILE ELEVATION (FT)	DESIGN WORKING LOAD (TONS)	MINIMUM EMBEDMENT INTO BEDROCK (FT)	TOP OF CAISSON ELEVATION (FT)
ABUT 1	2'-6"	5851	5876.14	94	14	5869
PIER 2	6'-6"	5828	N/A	1190	31	5858
ABUT 3	2'-6"	5847	5872.18	94	16	5865

AS-BUILT ELEVATIONS (ONLY SHORTEST CAISSON SHOWN)			
LOCATION	TOP OF CAISSON ELEV	BEDROCK ELEV	TIP ELEV
PIER 1	5869.0	5869.0	5851.0
PIER 2	5858.0	5858.0	5827.5
PIER 3	5865.0	5864.0	5847.0

NOTES:

1. ABUTMENT 1 & 3 PILING SHALL BE HP14x89 ENCASED IN CAISSONS. MINIMUM ENCASED PILE LENGTH = FULL LENGTH OF CAISSON (SEE CAISSON DETAILS SHEET).
2. MINIMUM CAISSON LENGTH SHALL BE 18 FT.
3. PILES AND CAISSONS SHALL EXTEND AT LEAST TO THE ESTIMATED TIP ELEVATION. PILES AND CAISSONS SHALL BE FURTHER ADVANCED INTO BEDROCK IF NECESSARY TO OBTAIN THE SPECIFIED MINIMUM EMBEDMENT.
4. TOP OF BEDROCK ELEVATION SHALL BE VERIFIED AT TIME OF CONSTRUCTION BY THE ENGINEER.
5. THE SIDES OF THE CAISSONS IN BEDROCK SHALL BE MECHANICALLY ROUGHENED IN THE BOTTOM 8 FEET.

DESIGNED BY: MDV
DRAFTED BY: KJS
CHECKED BY: DDH

ISSUE RECORD

NO.	DESCRIPTION	DATE
A	IN-PROCESS DESIGN SUBMITTAL	24 SEP 02
B	FINAL DESIGN SUBMITTAL	30 OCT 02
1	APPROVED FOR CONSTRUCTION	22 NOV 02
AB	AS-ABUILT	~~11DEC06~~ 01FEB07

TREX METRO DENVER / COLORADO
Southeast Corridor Constructors
7200 South Alton Way
Englewood, CO 80112

DMJM HARRIS
717 17th Street, Suite 500
Denver, Colorado 80202
Phone: (303) 376-2900
Fax: (303) 376-2999

SOUTHEAST CORRIDOR MULTI-MODAL PROJECT
AREA 3.3
LRT OVER C-470
CAISSON AND PILING LAYOUT

STRUCTURE NO F-17-OW | SECC STRUCTURE NO 65

PROJECT NO./CODE NH 0252-299 11584
FILE NAME SE3B2303
DRAWING NUMBER S106

AS-BUILT

File Name: C:\PWWORKING\DMS04496\SE3B2303.DGN
User: PAUL.NIKOLAI
Time Plotted: 07:30:22 AM
Date Plotted: 02/01/2007
Pen Table: S:\MICROSTATION\PLOTTING\PENTABLES\T-REX-GRAY.TBL

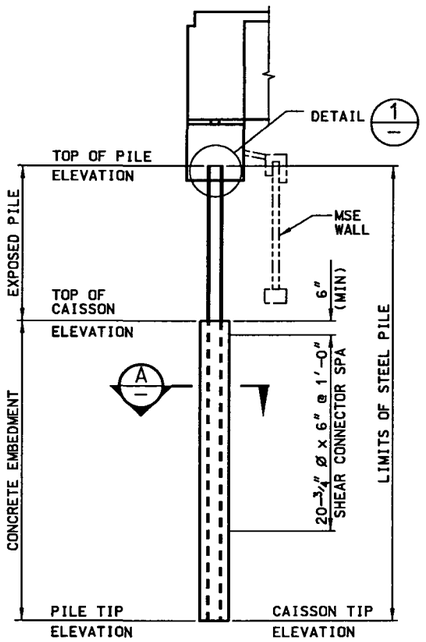

ABUTMENT 1 PILE DETAIL

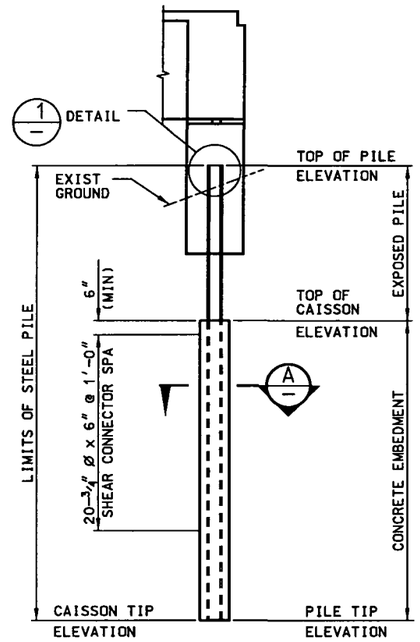

ABUTMENT 3 PILE DETAIL

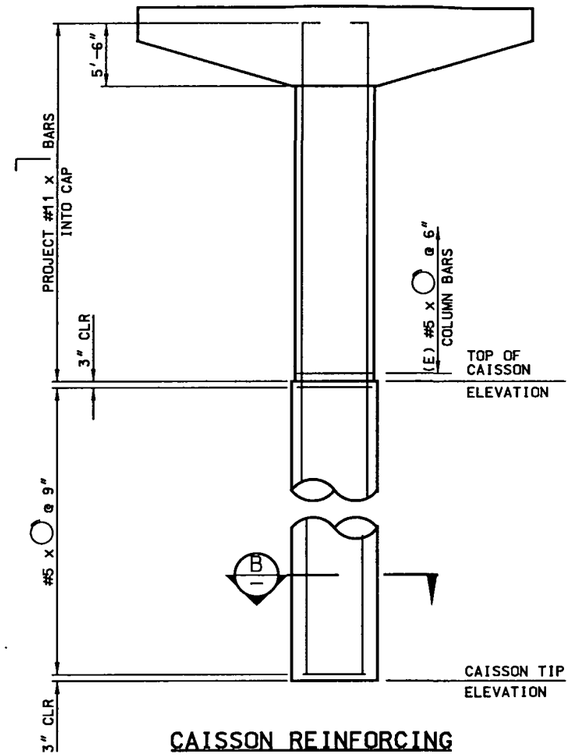

CAISSON REINFORCING @ PIER

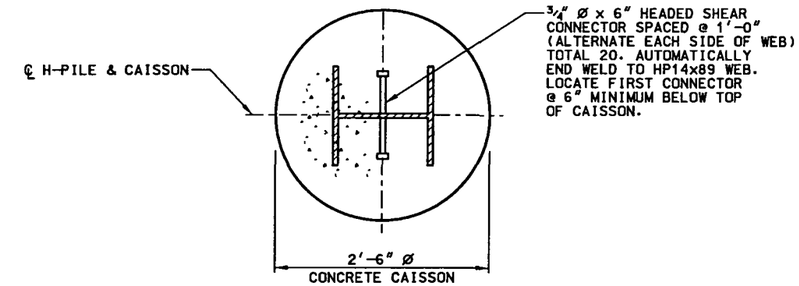

SECTION A

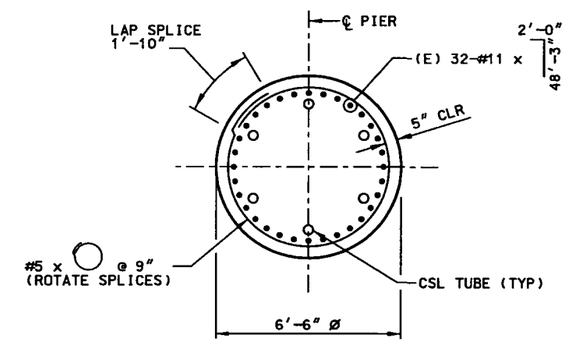

SECTION B

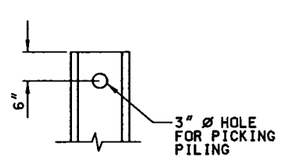

DETAIL 1

NOTES:

1. SEE CAISSSON & PILING LAYOUT SHEET FOR LOCATIONS.
2. TEMPORARY CASING AND DEWATERING MAY BE REQUIRED FOR THE CAISSONS WHERE A HIGH WATER TABLE MAY BE PRESENT AND FOR POSSIBLE CAVING CONDITIONS IN SAND AND GRAVEL.
3. CAISSON BEARING SURFACES MUST BE CLEANED PRIOR TO CONCRETE PLACEMENT.

DESIGNED BY: MDV
DRAFTED BY: KJS
CHECKED BY: DDH

ISSUE RECORD

NO.	DESCRIPTION	DATE
A	IN-PROCESS DESIGN SUBMITTAL	24 SEP 02
B	FINAL DESIGN SUBMITTAL	30 OCT 02
1	APPROVED FOR CONSTRUCTION	22 NOV 02
AB	AS-BUILT	01FEB07

T-REX METRO DENVER / COLORADO

Southeast Corridor Constructors
7200 South Alton Way
Englewood, CO 80112

DMJM HARRIS
717 17th Street, Suite 500
Denver, Colorado 80202
Phone: (303) 376-2900
Fax: (303) 376-2999

SOUTHEAST CORRIDOR MULTI-MODAL PROJECT
AREA 3.3
LRT OVER C-470
CAISSON DETAILS

STRUCTURE NO F-17-OW
SECC STRUCTURE NO 65

PROJECT NO./CODE NH 0252-299 11584
FILE NAME SE3B8302
DRAWING NUMBER S107

AS-BUILT

File Name: C:\PWWORKING\DMS04496\SE3B8302.DGN
User: PAUL.NIKOLAI
Time Plotted: 07:31:17 AM
Date Plotted: 02/01/2007
Pen Table: S:\MICROSTATION\PLOTTING\PENTABLES\T-REX-GRAY.TBL

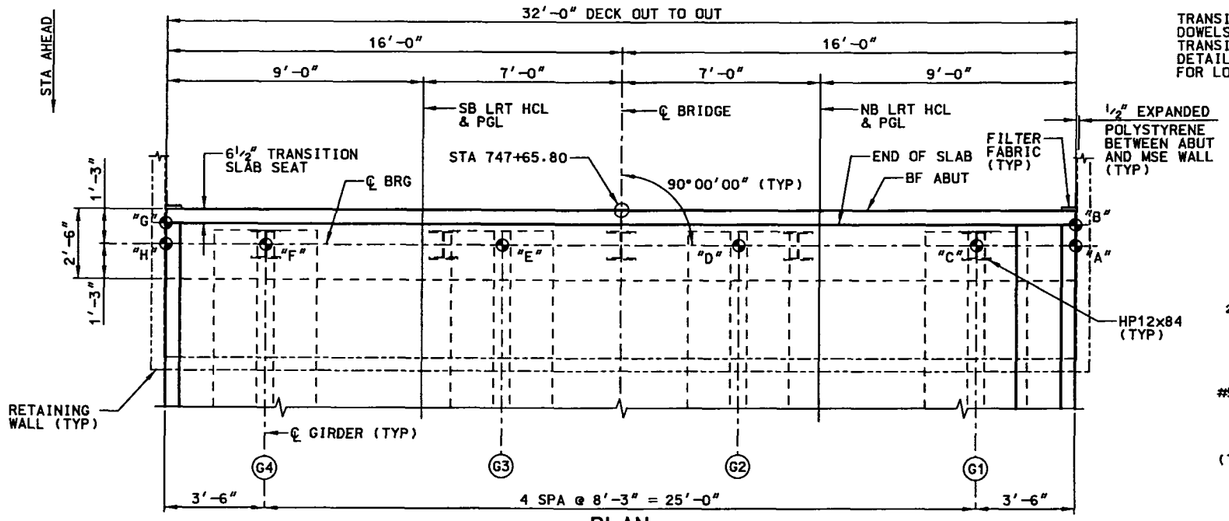

PLAN

DESIGNATES LOCATION OF ELEVATIONS.

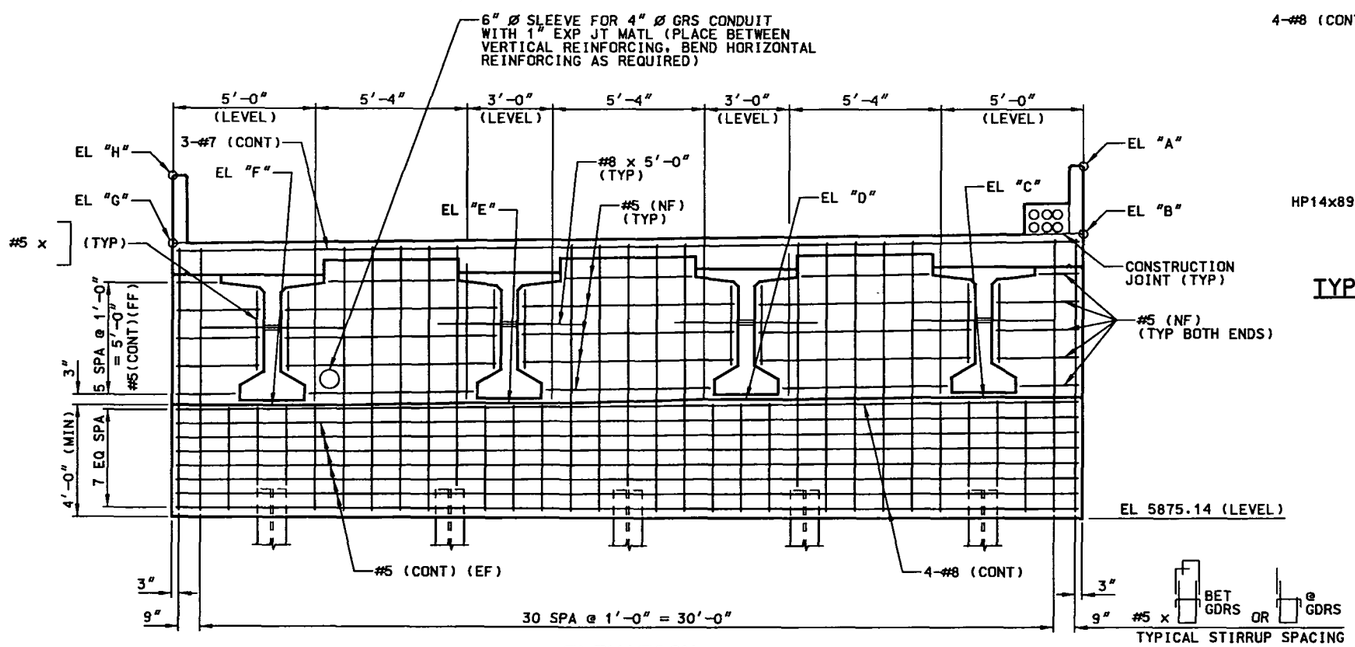

ELEVATION

LOOKING BACK STATION

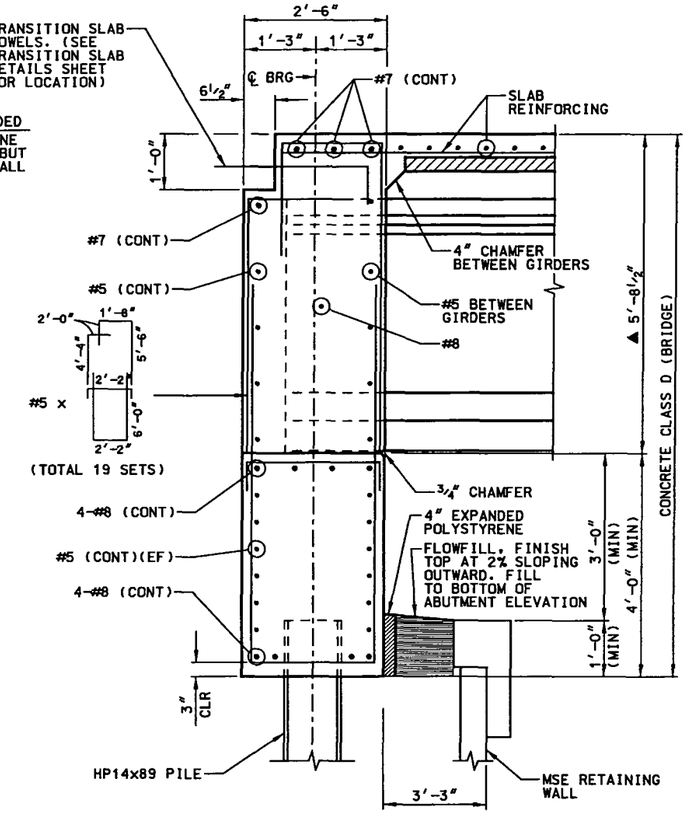

TYPICAL SECTION BETWEEN GIRDERS

▲ @ ℄ GIRDER & ℄ BEARING

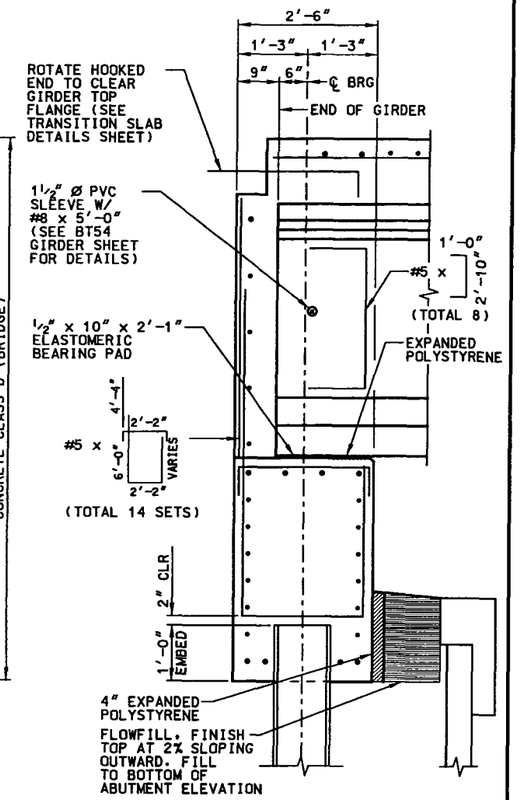

TYPICAL SECTION @ GIRDERS

SEE TYPICAL SECTION BETWEEN GIRDERS FOR ADDITIONAL DETAILS.

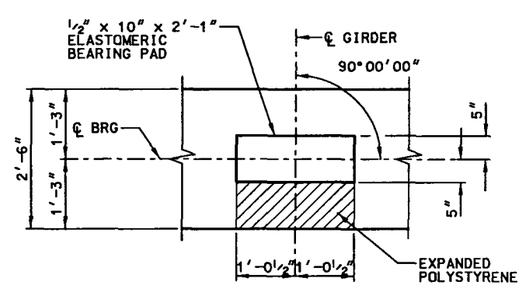

BEARING DETAIL

TABLE OF ELEVATIONS	
LOCATION	ELEVATION
EL "A"	5887.63
EL "B"	5885.22
EL "C"	5879.46
EL "D"	5879.35
EL "E"	5879.25
EL "F"	5879.14
EL "G"	5884.82
EL "H"	5887.23

DESIGNED BY: MDV
DRAFTED BY: KJS
CHECKED BY: DDH

ISSUE RECORD

NO.	DESCRIPTION	DATE
A	IN-PROCESS DESIGN SUBMITTAL	24 SEP 02
B	FINAL DESIGN SUBMITTAL	30 OCT 02
1	APPROVED FOR CONSTRUCTION	22 NOV 02
2	NOC #340 - REVISED DIMENSION	7 FEB 03
AB	AS-BUILT	01FEB07

TREX METRO DENVER / COLORADO

Southeast Corridor Constructors, 7200 South Alton Way, Englewood, CO 80112

DMJM HARRIS, 717 17th Street, Suite 500, Denver, Colorado 80202, Phone: (303) 376-2900, Fax: (303) 376-2999

SOUTHEAST CORRIDOR MULTI-MODAL PROJECT
AREA 3.3
LRT OVER C-470
ABUTMENT 1 DETAILS

STRUCTURE NO F-17-OW | SECC STRUCTURE NO 65

PROJECT NO./CODE NH 0252-299 11584
FILE NAME SE3B4301
DRAWING NUMBER S108

AS-BUILT

File Name: C:\PWWORKING\DMS0449\SE3B4301.DGN
User: PAUL.NIKOLAI
Time Plotted: 07:30:31 AM
Date Plotted: 02/01/2007
Pen Table: S:\MICROSTATION\PLOTTING\PENTABLES\T-REX-GRAY.TBL

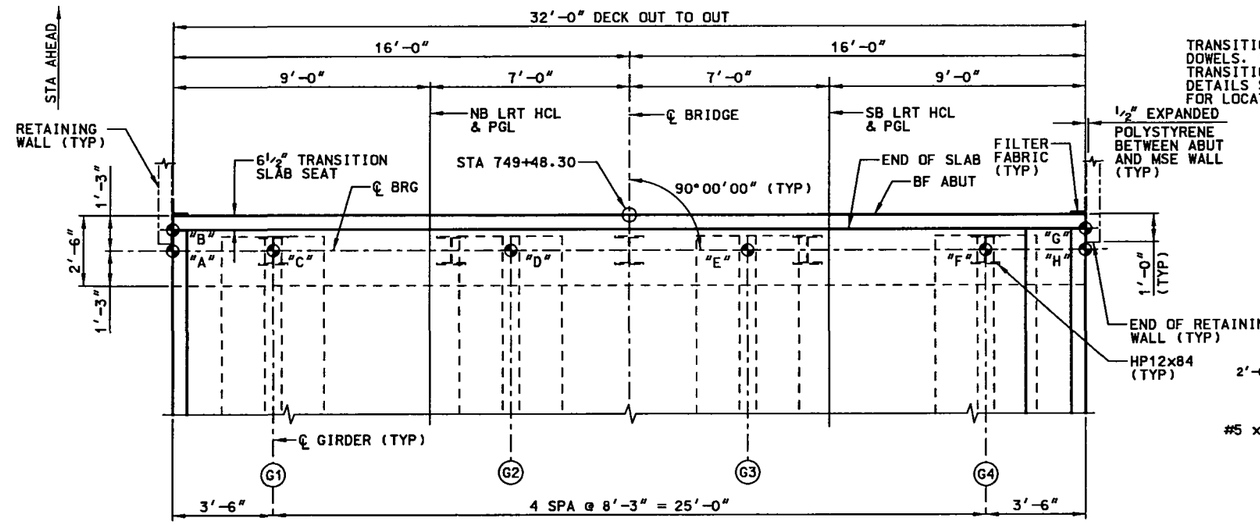

PLAN

DESIGNATES LOCATION OF ELEVATIONS.

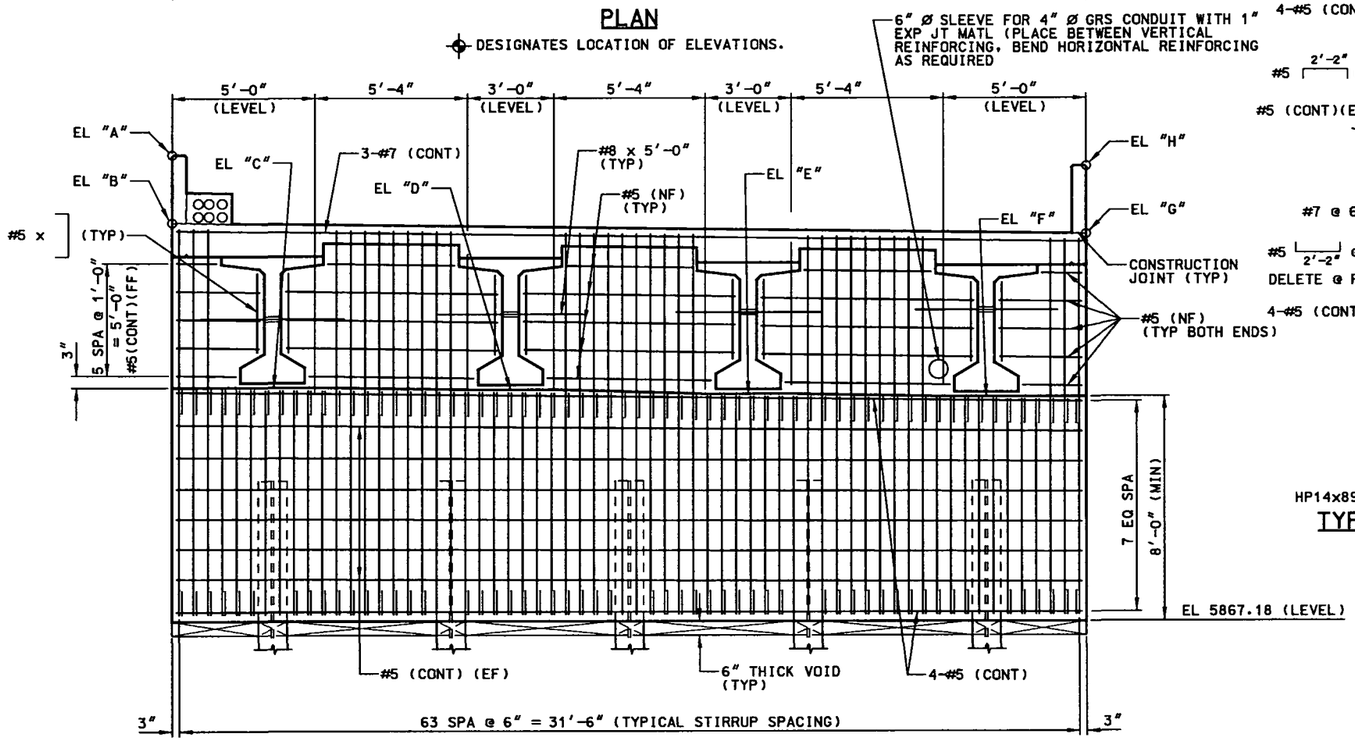

ELEVATION

LOOKING AHEAD STATION

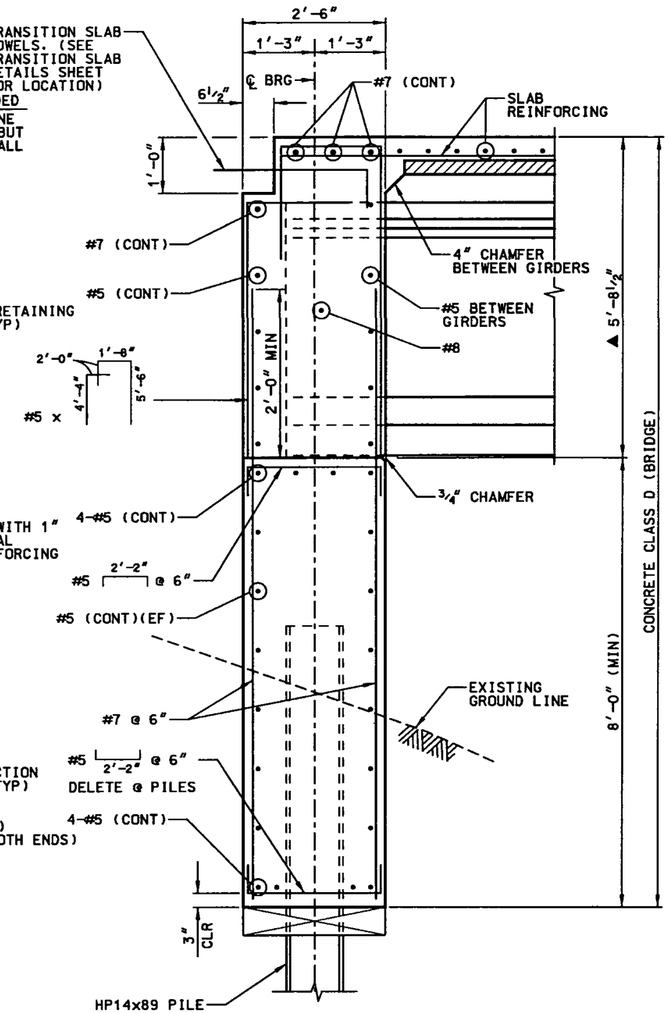

TYPICAL SECTION BETWEEN GIRDERS

▲ @ ℄ GIRDER & ℄ BEARING

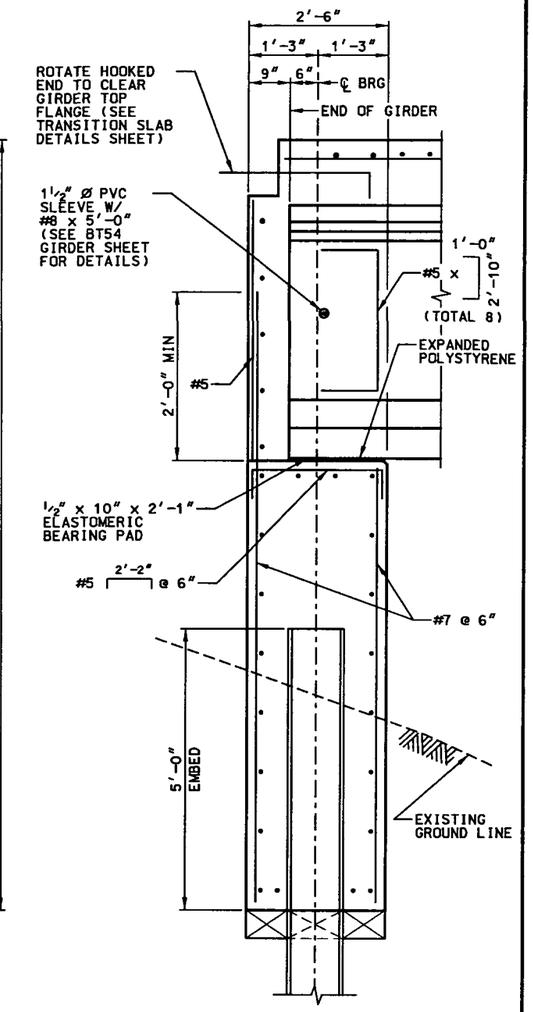

TYPICAL SECTION @ GIRDERS

SEE TYPICAL SECTION BETWEEN GIRDERS FOR ADDITIONAL DETAILS.

TABLE OF ELEVATIONS	
LOCATION	ELEVATION
EL "A"	5883.66
EL "B"	5881.23
EL "C"	5875.49
EL "D"	5875.39
EL "E"	5875.29
EL "F"	5875.18
EL "G"	5880.83
EL "H"	5883.26

File Name: C:\PWWORKING\DMS04496\SE3B4307.DGN
User: PAUL.NIKOLAI
Pen Table: S:\MICROSTATION\PLOTTING\PENTABLES\T-REX-GRAY.TBL
Date Plotted: 02/01/2007
Time Plotted: 07:30:36 AM

DESIGNED BY: MDV	ISSUE RECORD		
	NO.	DESCRIPTION	DATE
DRAFTED BY: KJS	A	IN-PROCESS DESIGN SUBMITTAL	24 SEP 02
	B	FINAL DESIGN SUBMITTAL	30 OCT 02
	1	APPROVED FOR CONSTRUCTION	22 NOV 02
CHECKED BY: DDH	AB	AS-BUILT	01FEB07

T-REX METRO DENVER / COLORADO

Southeast Corridor Constructors
7200 South Alton Way
Englewood, CO 80112

DMJM HARRIS
717 17th Street, Suite 500
Denver, Colorado 80202
Phone: (303) 376-2900
Fax: (303) 376-2999

SOUTHEAST CORRIDOR MULTI-MODAL PROJECT
AREA 3.3
LRT OVER C-470
ABUTMENT 3 DETAILS

STRUCTURE NO F-17-OW | SECC STRUCTURE NO 65

PROJECT NO./CODE NH 0252-299 11584

FILE NAME SE3B4307

DRAWING NUMBER S109

AS-BUILT

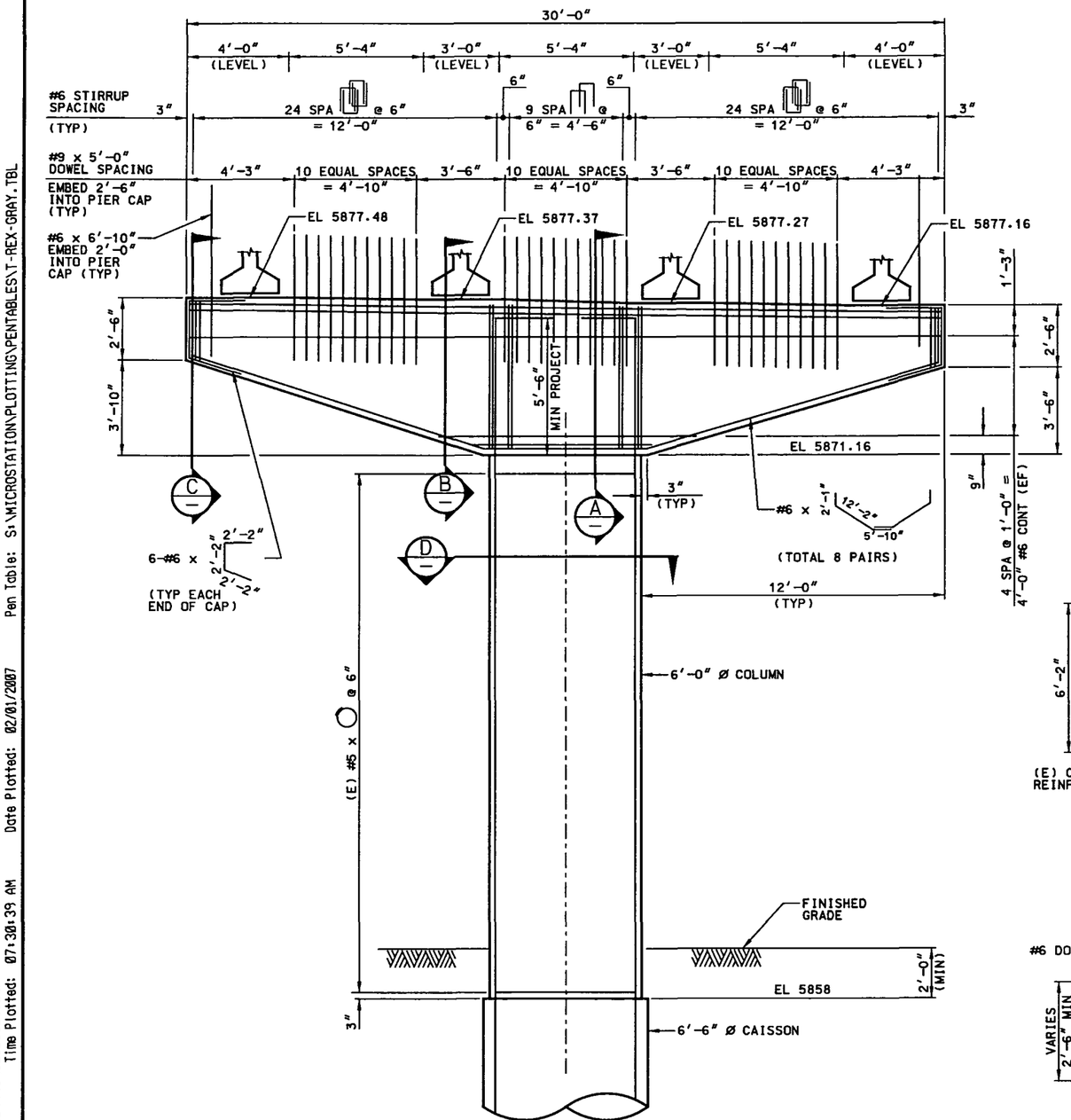

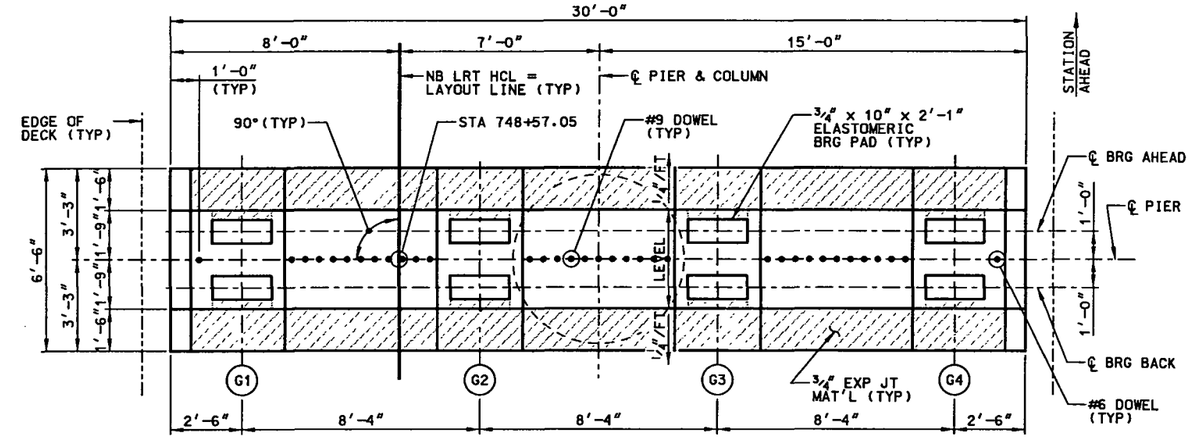

PLAN AT BEARING SEAT

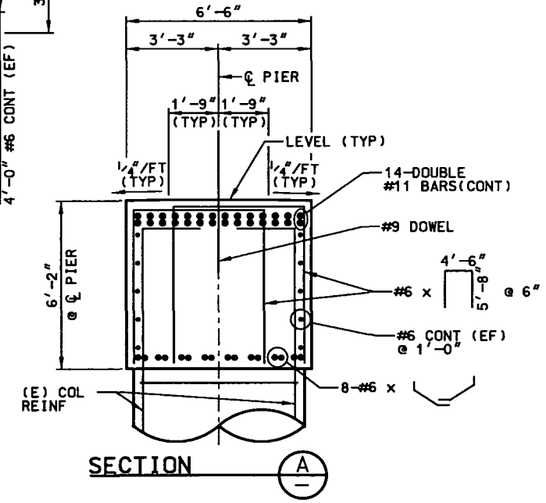

SECTION A

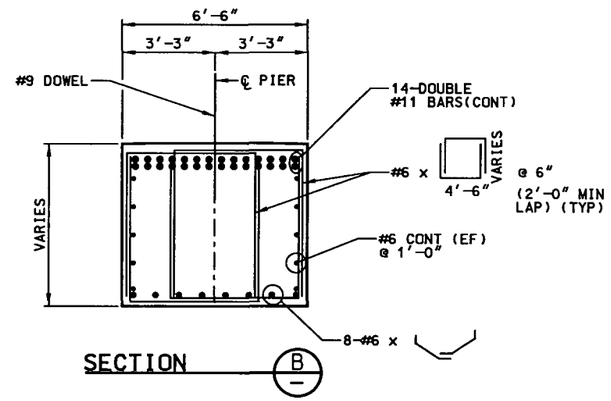

SECTION B

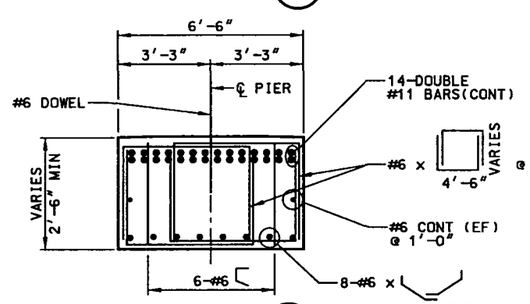

SECTION C

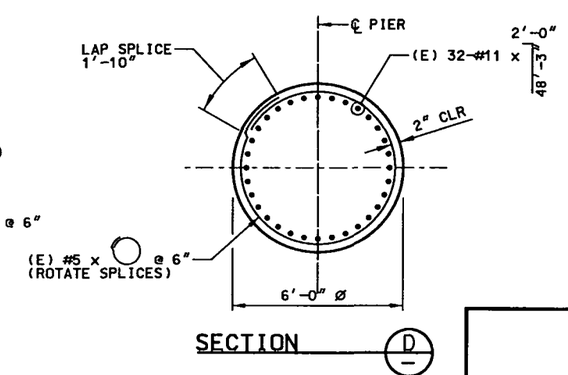

SECTION D

NOTE:

1. CONCRETE SHALL BE CLASS D WITH fc'= 4500 PSI AT 28 DAYS.

ISSUE RECORD		
NO.	DESCRIPTION	DATE
A	IN-PROCESS DESIGN SUBMITTAL	24SEP02
B	FINAL DESIGN SUBMITTAL	30OCT02
1	APPROVED FOR CONSTRUCTION	22NOV02
AB	AS-BUILT	01FEB07

DESIGNED BY: MDV
DRAFTED BY: KJS
CHECKED BY: DDH

TREX METRO DENVER / COLORADO
Southeast Corridor Constructors
7200 South Alton Way Englewood, CO 80112

DMJM HARRIS
717 17th Street, Suite 500
Denver, Colorado 80202
Phone: (303) 376-2900
Fax: (303) 376-2999

SOUTHEAST CORRIDOR MULTI-MODAL PROJECT
AREA 3.3
LRT OVER C-470
PIER 2 DETAILS

STRUCTURE NO F-17-OW
SECC STRUCTURE NO 65

PROJECT NO./CODE NH 0252-299 11584
FILE NAME SE3B5301
DRAWING NUMBER S110

AS-BUILT

File Name: C:\PWWORKING\DMS04496\SE3B5301.DGN
User: PAUL.NIKOLAI
Pen Table: S:\MICROSTATION\PLOTTING\PENTABLES\T-REX-GRAY.TBL
Date Plotted: 02/01/2007
Time Plotted: 07:30:39 AM

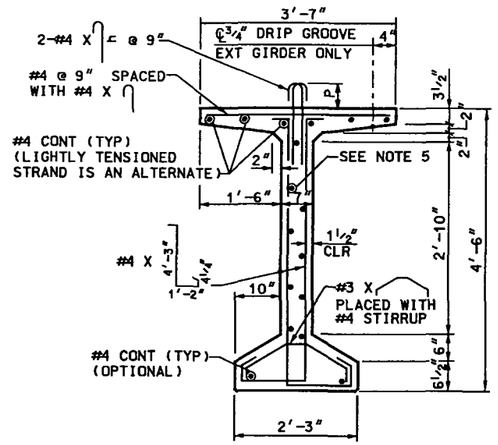

TYPICAL GIRDER SECTION A

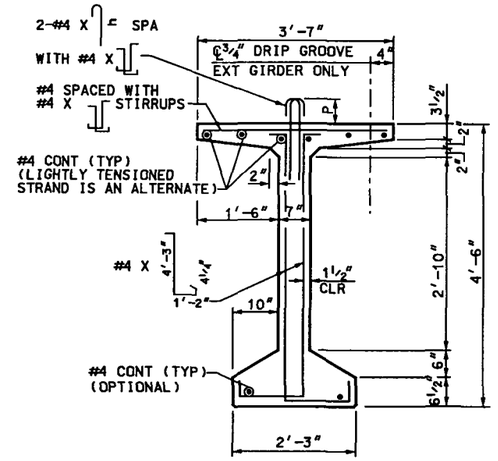

TYPICAL GIRDER SECTION B

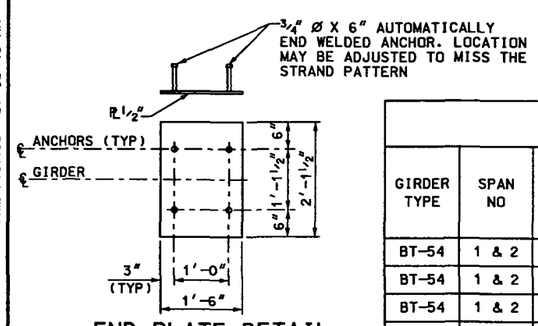

END PLATE DETAIL

GALVANIZE AFTER FABRICATION

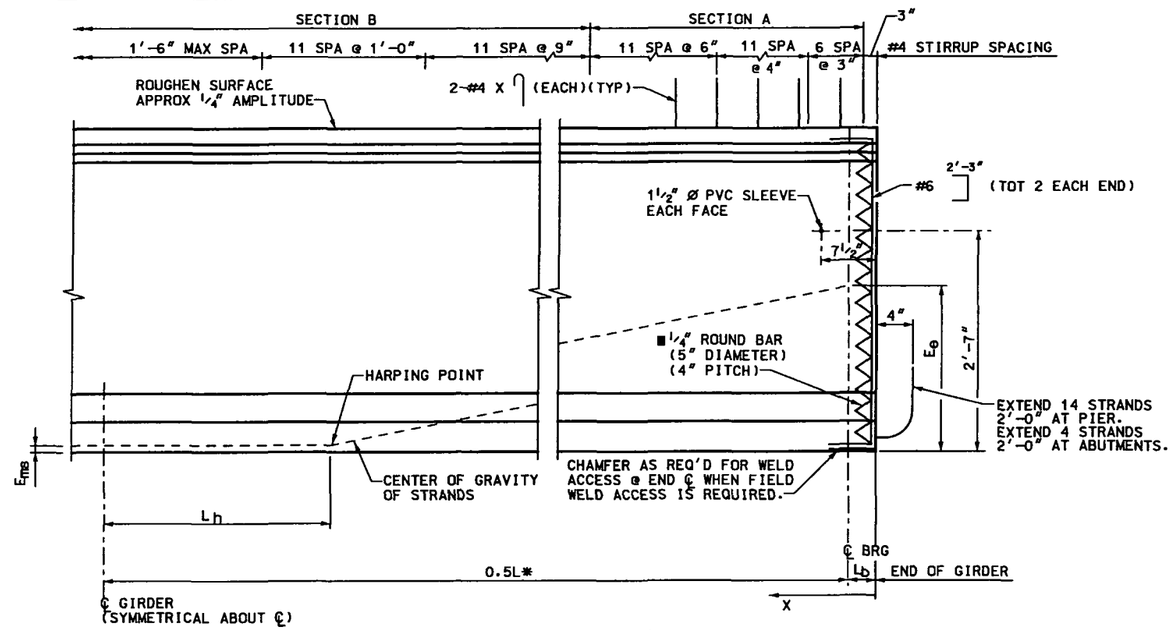

GIRDER ELEVATION

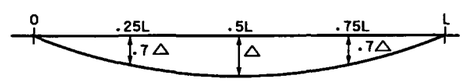

DEAD LOAD DEFLECTION DIAGRAM

GIRDER PROJECTION TABLE

X	P		h
	SPAN 1	SPAN 2	
(FT)	(IN)	(IN)	(IN)
0	10	10	22
.1L	10	10	22
.2L	8	8	22
.3L	8	8	22
.4L	8	8	22
.5L	6	6	22
.6L	8	8	22
.7L	8	8	22
.8L	8	8	22
.9L	10	10	22
1.0L	10	10	22

NOTES:

1. A MINIMUM OF TACK WELDING WILL BE PERMITTED ON ASTM A706 UNCOATED REINFORCING STEEL.
2. THE MINIMUM COVER FOR REINFORCING STEEL IS 1".
3. AT GIRDER ENDS EMBEDDED IN CONCRETE DIAPHRAGMS, CUT STRANDS FLUSH, EXCEPT AS SHOWN. DO NOT MAKE COSMETIC REPAIRS (DAMAGE LESS THAN 1 1/2" DEEP) TO THE PARTS OF THE GIRDERS EMBEDDED IN CONCRETE.
4. USE LOW RELAXATION STRANDS MEETING THE REQUIREMENTS OF 0.6" Ø ASTM A416 GRADE 270. THE MINIMUM SPACING BETWEEN STRANDS SHALL BE 2" HORIZONTAL AND 2" VERTICAL. THE MINIMUM COVER FOR PRESTRESSING STEEL IS 1 1/2".
5. A MINIMUM OF TWO HARPING POINTS SHALL BE USED PER GIRDER. HARPED STRANDS SHALL BE WELL DISTRIBUTED AT THE GIRDER ENDS, STARTING WITHIN 6" OF THE TOP OF THE GIRDER AND DISTRIBUTED SUCH THAT THERE IS NO SPACE BETWEEN STRANDS GREATER THAN 1'-0" AT THE END OF THE GIRDER. AS AN ALTERNATE, THE CONTRACTOR MAY PLACE #5 X 9'-0" (MAX) AT 1'-0" IN THE SIDES OF THE END OF THE WEB PARALLEL TO THE HARPED STRANDS SUCH THAT THERE IS NO SPACE GREATER THAN 1'-0".
6. CONCRETE SHALL BE CLASS SS.
7. ENTRAINED AIR IS NOT REQUIRED FOR GIRDER CONCRETE.
8. USE 1/2" CHAMFER ON ALL CORNERS, EXCEPT AS NOTED.
9. PREDICTED CAMBER IS THE CAMBER FOR THE GIRDER ALONE AT 30 DAYS TO 60 DAYS.THE CONTRACTOR SHALL LIMIT THE CAMBER GROWTH TO A VALUE NOT TO EXCEED THE PREDICTED CAMBER PLUS 1" PRIOR TO THE DECK POUR BY WEIGHTING, SCHEDULING FABRICATION, POST TENSIONING, OR OTHER MEANS AND MUST REPORT TO THE ENGINEER VALUES OF CAMBER WHICH EXCEED THE PREDICTED CAMBER PLUS 1". REMEDIAL MEASURES, AS APPROVED BY THE ENGINEER, SHALL BE TAKEN IF THE PREDICTED CAMBER PLUS 1" IS EXCEEDED. THE APPROVED REMEDIAL MEASURES SHALL BE FREE OF ANY ADVERSE IMPACT. THE COSTS ASSOCIATED WITH ALL REMEDIAL MEASURES SHALL BE BORNE BY THE CONTRACTOR.
10. SPECIFICATION TOLERANCES FOR THE GIRDER SHALL BE PER MNL-116, SECTION 6.4.
11. THE CONTRACTOR IS RESPONSIBLE FOR DETERMINING NECESSARY BRACING REQUIREMENTS AND FOR PROVIDING ADEQUATE BRACING FOR THE SPECIFIC WIND AND WEATHER CONDITIONS TO BE ENCOUNTERED FOR EACH SPECIFIC PROJECT.
12. USE AND INSTALLATION OF THE INTERMEDIATE DIAPHRAGMS SHALL NOT RELIEVE THE CONTRACTOR OF FULL RESPONSIBILITY TO CONSTRUCT THE WORK IN A MANNER WHICH PROVIDES ALL NECESSARY RIGIDITY, SUPPORTS ALL LOADS IMPOSED, AND PROVIDES IN THE FINISHED STRUCTURE THE LINES AND GRADES INDICATED ON THE PLANS.
13. ■ THE CONTRACTOR MAY SUBMIT AN ALTERNATE CROSS TIE ARRANGEMENT AT THE END OF THE WEB FOR APPROVAL BY THE ENGINEER.

ABBREVIATIONS:

A_s* = MINIMUM AREA OF THE PRESTRESSING STEEL
f'_s = ULTIMATE STRENGTH OF THE PRESTRESSING STEEL
F_j = JACKING FORCE PER GIRDER
F_f = FINAL FORCE PER GIRDER AFTER ALL LOSSES
f'_{ci} = REQUIRED CONCRETE STRENGTH AT RELEASE OF PRESTRESS FORCE
f'_c = REQUIRED CONCRETE STRENGTH AT 28 DAYS OF AGE
Δ = DEFLECTION @ ℄ OF SPAN DUE TO CAST-IN-PLACE SLAB DIAPHRAGMS, BALLAST, CURBS, RAILS AND WALKS.
Lb = DISTANCE FROM ℄ BRG TO END OF PRECAST SECTION.

GIRDER SCHEDULE

GIRDER TYPE	SPAN NO	GIRDER NO	L (FEET)	Lh (FEET)	BACK STATION Lb (FT)	AHEAD STATION Lb (FT)	A_s* (SQUARE INCH)	DEBOND STRANDS (PERCENT)	DEBOND LENGTH (FEET)	E_{ms} (INCH)	E_s (INCH)	F_j (KIPS)	F_f (KIPS)	CONCRETE STRENGTH f'_{ci} (PSI)	CONCRETE STRENGTH f'_c (PSI)	Δ (INCH)	PREDICTED CAMBER (INCH)
BT-54	1 & 2	G1	89.00	9.00	0.5	0.5	6.944	18.75	4.0	3.47	13.88	1406.2	1020.9	6500	7500	0.8	3.5
BT-54	1 & 2	G2	89.00	9.00	0.5	0.5	6.944	18.75	4.0	3.47	13.88	1406.2	1020.9	6500	7500	0.8	3.5
BT-54	1 & 2	G3	89.00	9.00	0.5	0.5	6.944	18.75	4.0	3.47	13.88	1406.2	1020.9	6500	7500	0.8	3.5
BT-54	1 & 2	G4	89.00	9.00	0.5	0.5	6.944	18.75	4.0	3.47	13.88	1406.2	1020.9	6500	7500	0.8	3.5

DESIGNED BY: MDV
DRAFTED BY: KJS
CHECKED BY: DDH

ISSUE RECORD

NO.	DESCRIPTION	DATE
A	IN-PROCESS DESIGN SUBMITTAL	24SEP02
B	FINAL DESIGN SUBMITTAL	30OCT02
1	APPROVED FOR CONSTRUCTION	22NOV02
AB	AS-BUILT	01FEB07

TREK METRO DENVER / COLORADO
Southeast Corridor Constructors
7200 South Alton Way
Englewood, CO 80112
DMJM HARRIS
717 17th Street, Suite 500
Denver, Colorado 80202
Phone: (303) 376-2900
Fax: (303) 376-2999

SOUTHEAST CORRIDOR MULTI-MODAL PROJECT
AREA 3.3
LRT OVER C-470
BT54 GIRDER

STRUCTURE NO F-17-OW
SECC STRUCTURE NO 65

PROJECT NO./CODE NH 0252-299 11584
FILE NAME SE3B6301
DRAWING NUMBER S111

AS-BUILT

File Name: C:\PWWORKING\DMS04496\SE3B6301.DGN
User: PAUL.NIKOLAI
Time Plotted: 07:30:46 AM
Date Plotted: 02/01/2007
Pen Table: S:\MICROSTATION\PLOTTING\PENTABLES\T-REX-GRAY.TBL

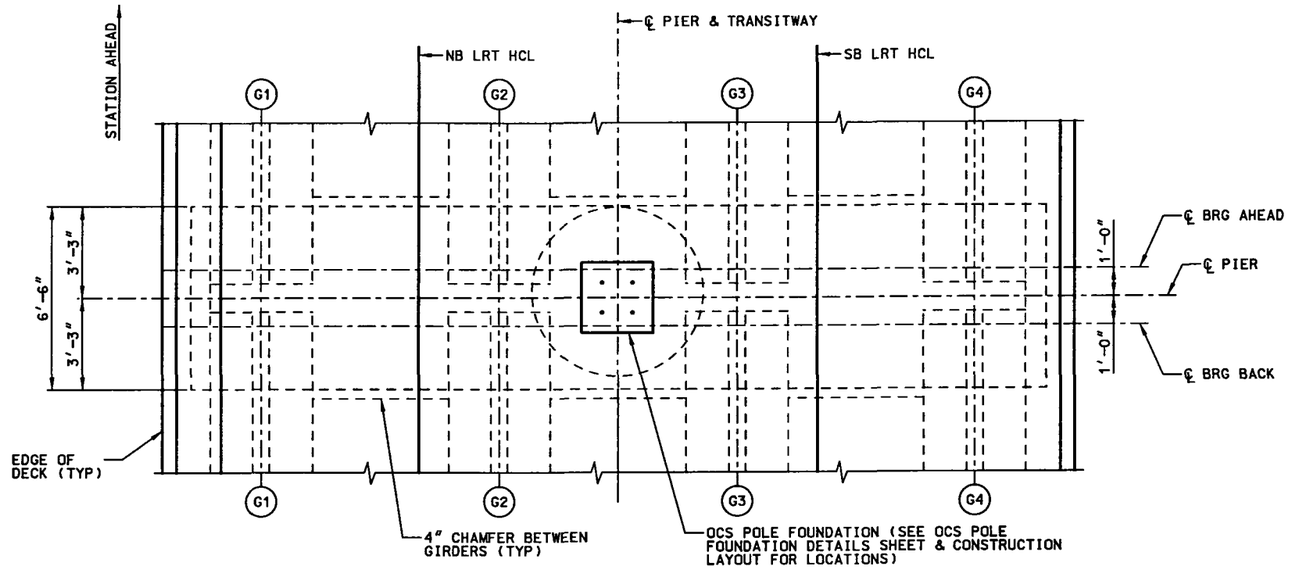

PLAN

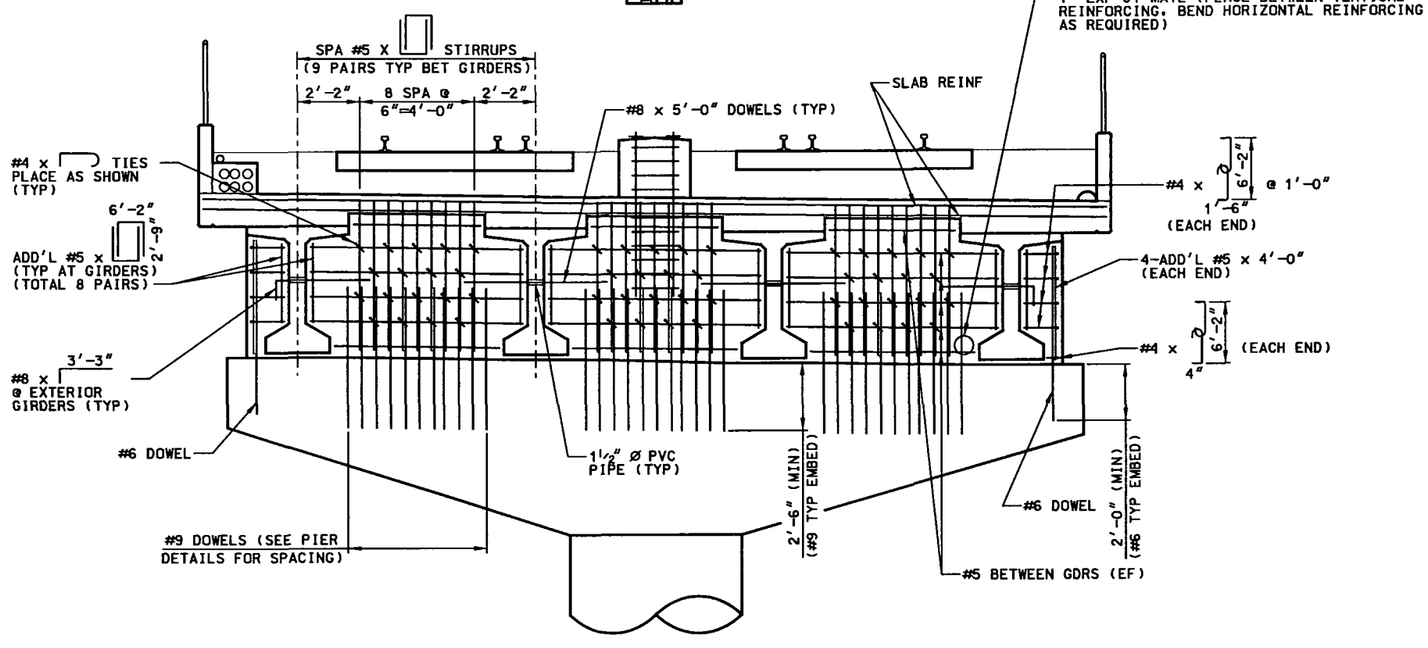

ELEVATION

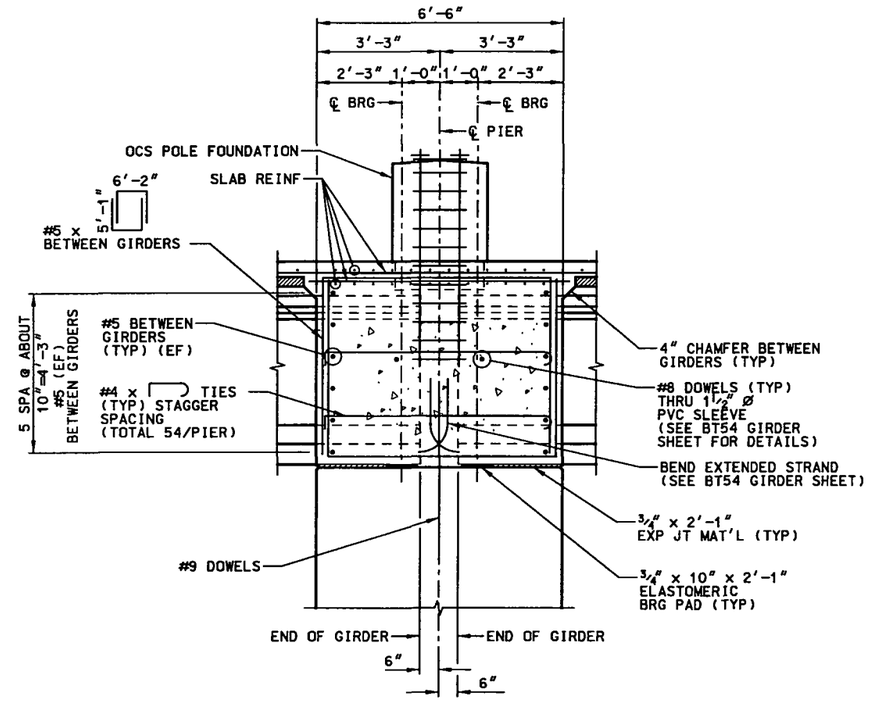

TYPICAL SECTION

DESIGNED BY: MDV	ISSUE RECORD			
	NO.	DESCRIPTION	DATE	
DRAFTED BY: KJS	A	IN-PROCESS DESIGN SUBMITTAL	24 SEP 02	
	B	FINAL DESIGN SUBMITTAL	30 OCT 02	
	1	APPROVED FOR CONSTRUCTION	22 NOV 02	
CHECKED BY: DDH	AB	AS-BUILT	01FEB07	

TREX METRO DENVER / COLORADO

Southeast Corridor Constructors, 7200 South Alton Way, Englewood, CO 80112

DMJM HARRIS, 717 17th Street, Suite 500, Denver, Colorado 80202, Phone: (303) 376-2900, Fax: (303) 376-2999

SOUTHEAST CORRIDOR MULTI-MODAL PROJECT
AREA 3.3
LRT OVER C-470
PIER DIAPHRAGM DETAILS

STRUCTURE NO F-17-OW | SECC STRUCTURE NO 65

PROJECT NO./CODE NH 0252-299 11584

FILE NAME SE3B6302

DRAWING NUMBER S113

AS-BUILT

File Name: C:\PWWORKING\DMS04496\SE3B6302.DGN
User: PAUL.NIKOLAI
Time Plotted: 07:30:56 AM
Date Plotted: 02/01/2007
Pen Table: S:\MICROSTATION\PLOTTING\PENTABLES\T-REX-GRAY.TBL

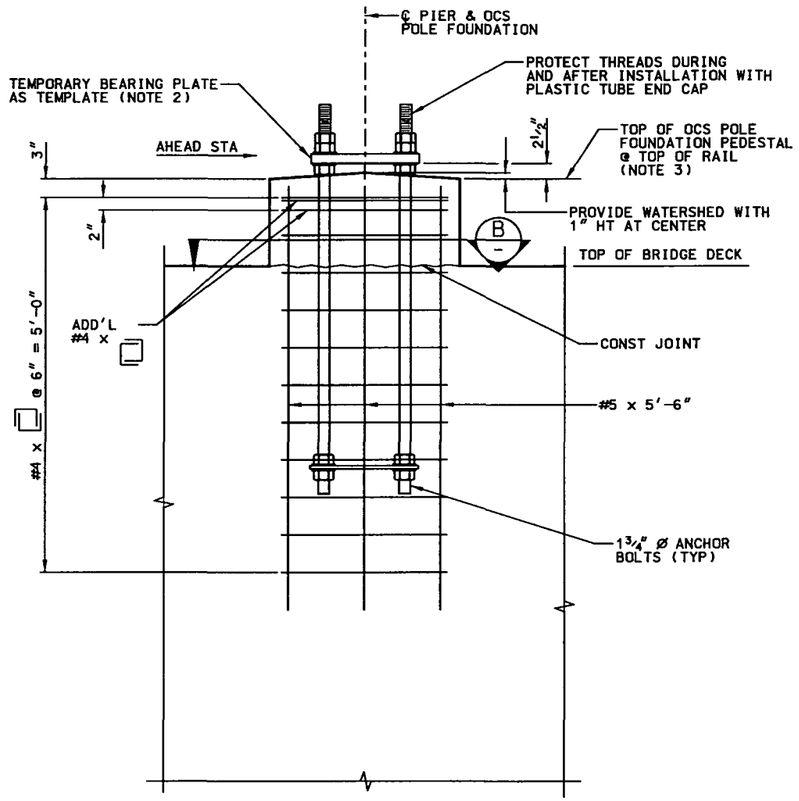

OCS POLE FOUNDATION @ PIER DIAPHRAGM

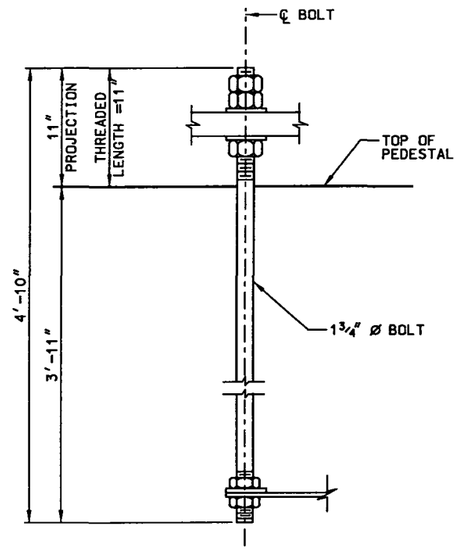

ANCHOR BOLT DETAIL
(TYPICAL)

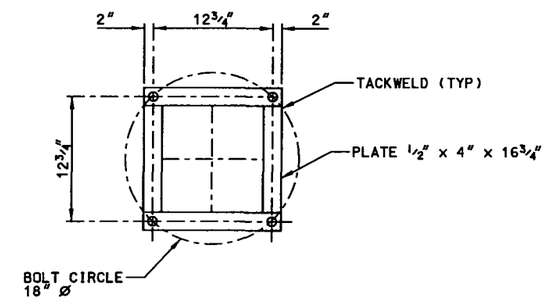

BEARING PLATE DETAIL

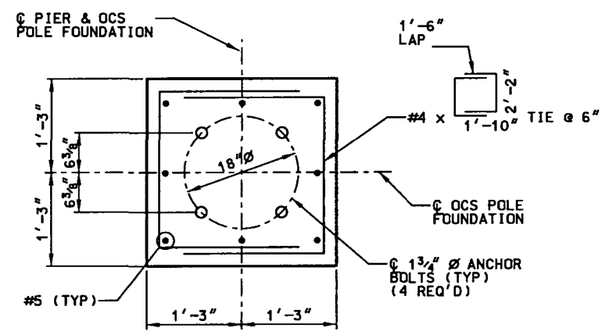

SECTION B

NOTES:

1. SEE OVERHEAD CONTACT SYSTEM POLE ASSEMBLIES DRAWINGS FOR ANCHOR BOLT ASSEMBLY.
2. PROVIDE BOLT PATTERN TEMPLATE FOR INSTALLATION OF ANCHOR BOLTS.
3. TOP OF PEDESTAL SHALL BE AT TOP OF HIGHEST ADJACENT RAIL.
4. FOR OCS POLE OFFSET FROM NB LRT HCL, SEE CONSTRUCTION LAYOUT SHEETS.
5. ANCHOR BOLTS MAY BE PLACED WITHIN A 4 INCH DIAMETER FORMED CYLINDRICAL VOID AND THEN GROUTED WITH HIGH STRENGTH EPOXY GROUT.

DESIGNED BY: MDV
DRAFTED BY: KJS
CHECKED BY: DDH

ISSUE RECORD

NO.	DESCRIPTION	DATE
A	IN-PROCESS DESIGN SUBMITTAL	24 SEP 02
B	FINAL DESIGN SUBMITTAL	30 OCT 02
1	APPROVED FOR CONSTRUCTION	22 NOV 02
2	APPROVED FOR CONSTRUCTION - NUT ADDED TO ANCHOR BOLT	20 DEC 02
AB	AS-BUILT	01FEB07

T-REX METRO DENVER / COLORADO
Southeast Corridor Constructors
7200 South Alton Way Englewood, CO 80112

DMJM HARRIS
717 17th Street, Suite 500
Denver, Colorado 80202
Phone: (303) 376-2900
Fax: (303) 376-2999

SOUTHEAST CORRIDOR MULTI-MODAL PROJECT
AREA 3.3
LRT OVER C-470
OCS POLE FOUNDATION DETAILS

STRUCTURE NO F-17-OW
SECC STRUCTURE NO 65

PROJECT NO./CODE NH 0252-299 11584
FILE NAME SE3B8304
DRAWING NUMBER S114

AS-BUILT

File Name: C:\PWWORKING\DMS04496\SE3B8304.DGN
User: PAUL.NIKOLAI
Time Plotted: 07:31:23 AM
Date Plotted: 02/01/2007
Pen Table: S:\MICROSTATION\PLOTTING\PENTABLES\T-REX-GRAY.TBL

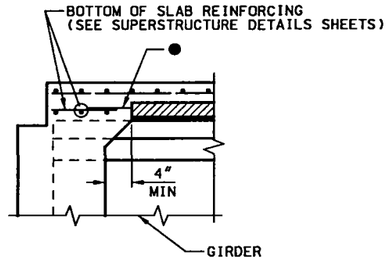

SECTION AT ABUTMENT

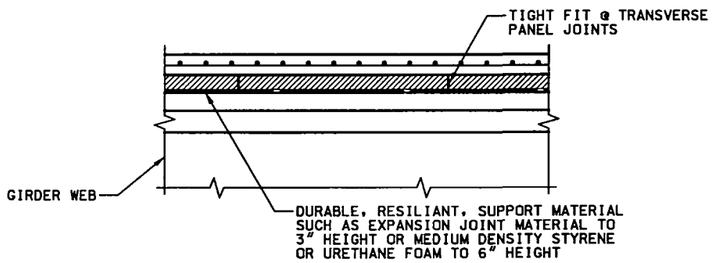

SECTION THRU TRANSVERSE PANEL JOINTS

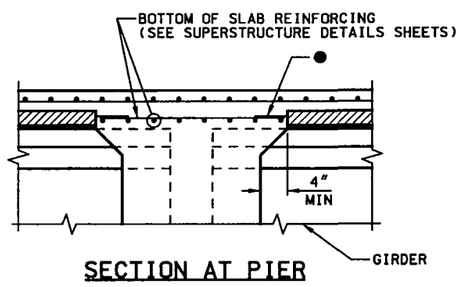

SECTION AT PIER

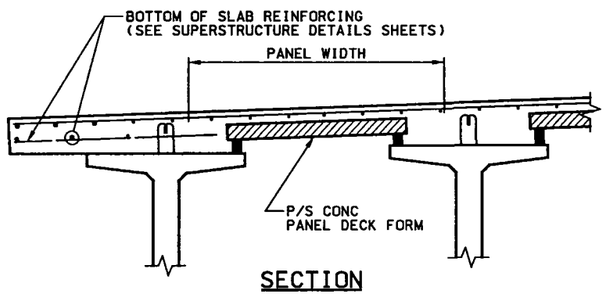

SECTION

NOTES:

1. SAWING OF PANELS IS ACCEPTABLE IN AREAS WHERE PROJECTING REINFORCEMENT IS NOT REQUIRED. IT IS DESIRABLE TO HAVE THE PRESTRESSING STRANDS PROJECT FROM THE PANELS AS LONG AS THE PROJECTING STRANDS DO NOT INTERFERE WITH OTHER BRIDGE COMPONENTS.
2. ● REINFORCING PERPENDICULAR TO STRANDS MAY BE DEFORMED REINF BARS, WELDED WIRE FABRIC, OR WELDED DEFORMED BAR MATS, AND SHALL BE PLACED DIRECTLY ABOVE THE STRANDS. MINIMUM AREA OF REINFORCING PERPENDICULAR TO STRANDS SHALL BE 0.22 SQ IN PER FT. TENSIONED OR UNTENSIONED STRANDS MAY ALSO BE USED. THESE INDIVIDUAL BARS OR WIRES SHALL BE NO LARGER THAN 0.375" DIAMETER. FOR LOCATION OF LONGITUDINAL BAR EXTENSIONS, SEE PRECAST PANEL DECK FORM (2) SHEET.
3. THE LONGITUDINAL REINFORCING STEEL IN THE CAST-IN-PLACE PORTION OF THE DECK MAY REST DIRECTLY ON THE PANELS AS NECESSARY TO OBTAIN CLEARANCES AT THE TOP OF DECK, UNLESS OTHERWISE NOTED.
4. THE TOLERANCE ON STRAND PLACEMENT SHALL NOT EXCEED 1/4". THE TOLERANCE ON PANEL THICKNESS SHALL NOT EXCEED 1/4".
5. CONCENTRATED CONSTRUCTION LOADS SHALL NOT EXCEED 500 LB UNLESS THE LOAD IS DISTRIBUTED TO LESS THAN 117 PSF. TOTAL LOADS APPLIED TO ANY PANEL DURING CONSTRUCTION SHALL NOT EXCEED 117 PSF.
6. BOTTOM FLEXURAL CRACKS GREATER THAN 0.010", OR CAMBERS & SAGS GREATER THAN 0.5" WILL BE CONSIDERED EVIDENCE OF MISHANDLING, OVERLOADING, OR EXCEEDING ALLOWABLE TOLERANCES, AND MAY BE CAUSE FOR REJECTING PANELS AT THE ENGINEER'S DISCRETION.

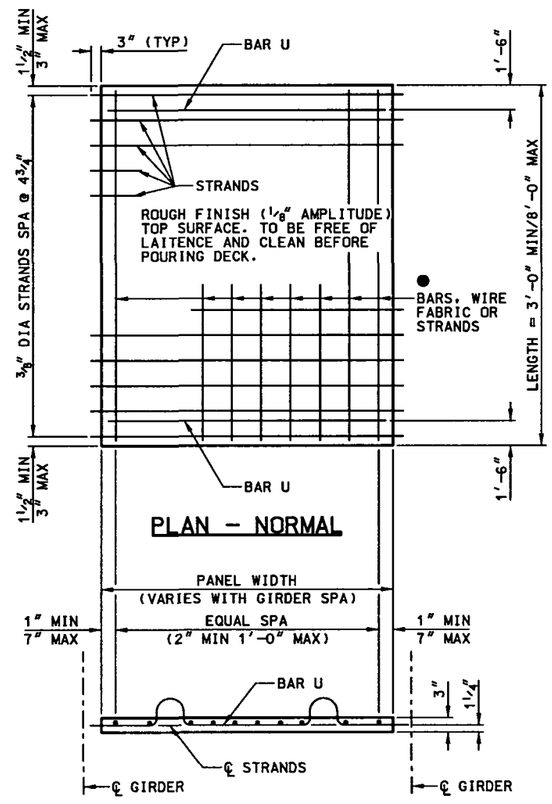

PRESTRESSED PANEL DETAILS

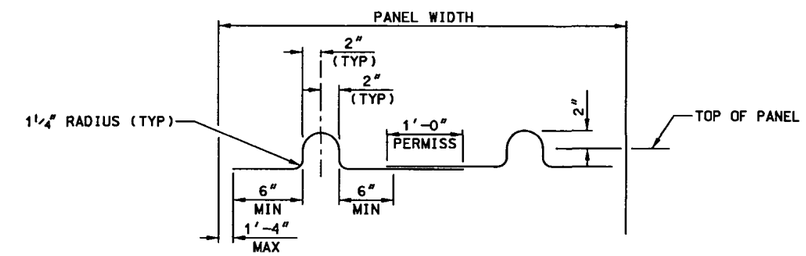

BAR U (#3)
PRESTRESSED PANEL DETAILS

DESIGNED BY: MDV	ISSUE RECORD		
	NO.	DESCRIPTION	DATE
DRAFTED BY: KJS	A	IN-PROCESS DESIGN SUBMITTAL	24 SEP 02
	B	FINAL DESIGN SUBMITTAL	30 SEP 02
	1	APPROVED FOR CONSTRUCTION	22 NOV 02
CHECKED BY: DDH	AB	AS-BUILT	01FEB07

TREX METRO DENVER / COLORADO

Southeast Corridor Constructors
7200 South Alton Way
Englewood, CO 80112

DMJM HARRIS
717 17th Street, Suite 500
Denver, Colorado 80202
Phone: (303) 376-2900
Fax: (303) 376-2999

SOUTHEAST CORRIDOR MULTI-MODAL PROJECT
AREA 3.3
LRT OVER C-470
PRECAST PANEL DECK FORM (1)

STRUCTURE NO F-17-OW | SECC STRUCTURE NO 65

PROJECT NO./CODE NH 0252-299 11584
FILE NAME SE3B8305
DRAWING NUMBER S115

AS-BUILT

File Name: C:\PWWORKING\DMS04496\SE3B8305.DGN
User: PAUL.NIKOLAI
Time Plotted: 07:31:28 AM
Date Plotted: 02/01/2007
Pen Table: S:\MICROSTATION\PLOTTING\PENTABLES\T-REX-GRAY.TBL

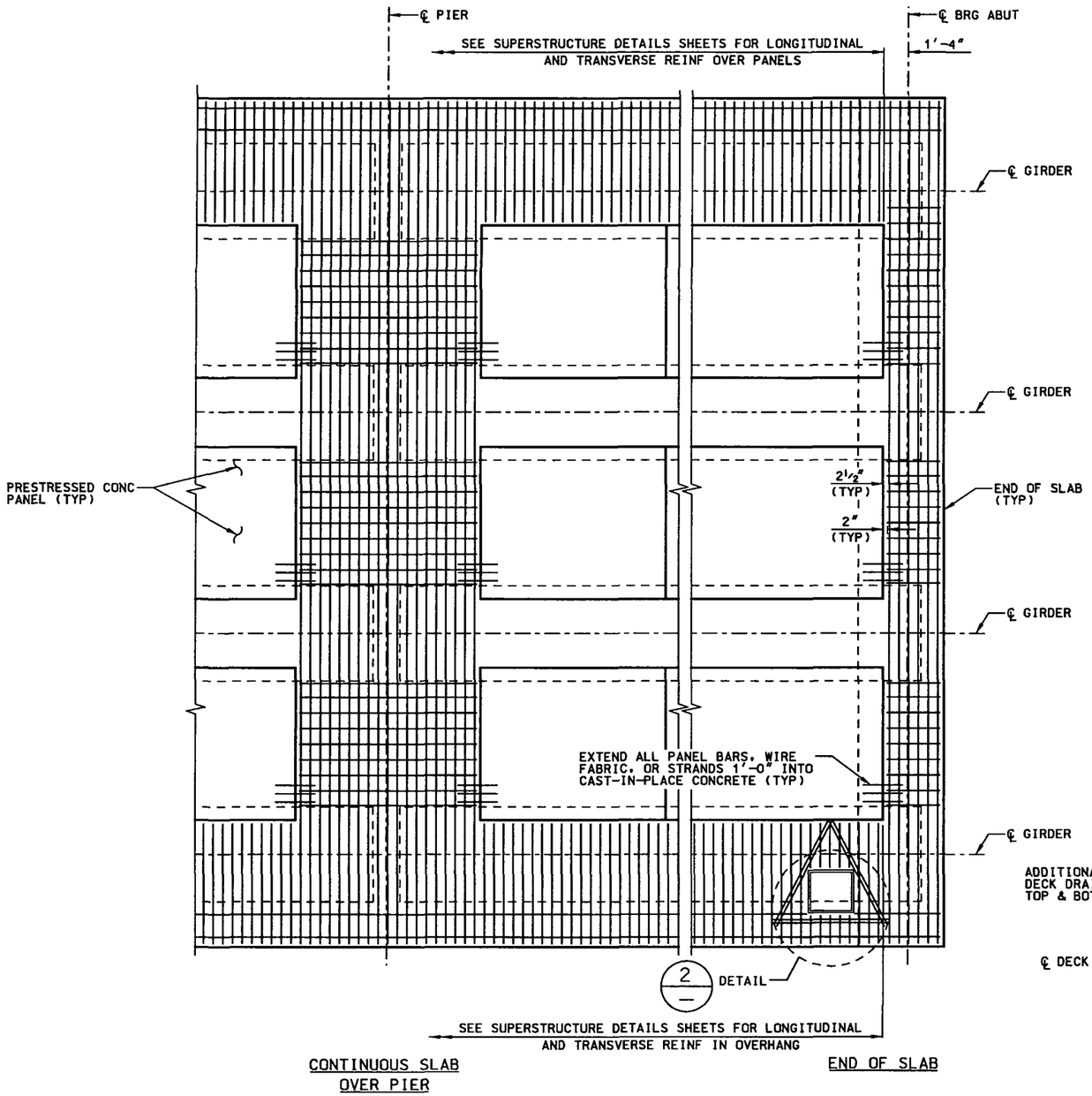

PART PLAN

NOTES:

1. COMPOSITE TOTAL SLAB DESIGNED FOR RTD LIGHT RAIL TRAIN LOADING.
2. ALL CONCRETE SHALL BE CLASS S WITH RELEASE STRENGTH f'ci = 4500 PSI AND MINIMUM 28 DAY STRENGTH f'c = 6000 PSI. THE STRENGTH SHALL BE AT LEAST 5000 PSI AT THE TIME OF THE DECK POUR.
3. USE 3/8" Ø LOW RELAXATION STRANDS MEETING THE REQUIREMENTS OF ASTM A-416 GRADE 270. JACKING FORCE PER STRAND (FJ) SHALL BE AT LEAST 17.2 KIPS. FINAL FORCE PER STRAND (Ff) IS ESTIMATED TO BE 14.2 KIPS.
4. INSTALLATION OF BAR U (#3) IS MANDATORY. ALL FOUR BAR U (#3) LOOPS SHALL BE USED SIMULTANEOUSLY FOR LIFTING THE PANELS. ALTERNATE METHODS MAY BE USED, FOR LIFTING, PROVIDED THEY ARE SHOWN ON THE SHOP PLANS AND APPROVED BY THE ENGINEER.
5. CARE MUST BE TAKEN TO ENSURE PROPER CLEANING OF CONSTRUCTION DEBRIS AND CONSOLIDATION OF CONCRETE MORTAR UNDER THE EDGES OF THE PANELS. IT IS ALSO IMPORTANT THAT ADEQUATE SPACE (▲ MIN 1" X 2") IS PROVIDED FOR THE CONCRETE TO FILL THE SPACE UNDER THE PANEL AS THE SLAB CONCRETE IS PLACED. PANEL LENGTHS AND WIDTH SHALL BE DETERMINED BY THE CONTRACTOR AND SHOWN ON THE SHOP PLANS.
6. THE CONTRACTOR IS RESPONSIBLE FOR THE STABILITY OF THE PANELS ON THE GIRDERS. ERECTED PANELS SHALL BE UNIFORMLY SUPPORTED ALONG THE LENGTH OF THE PANEL. THE CONTRACTOR IS RESPONSIBLE FOR MEETING THE TOTAL SLAB THICKNESS SHOWN ON THE SUPERSTRUCTURE DETAILS.
7. ALL PLANES OF REINFORCING STEEL SHOWN IN THE SUPERSTRUCTURE DETAILS ARE REQUIRED FOR AREAS NOT FORMED WITH PRECAST PANELS.
8. SEE DRAINAGE DETAILS SHEET FOR DECK DRAIN DETAILS.
9. CUT BOTTOM LAYER OF REINFORCING AT PANEL, IF NECESSARY.

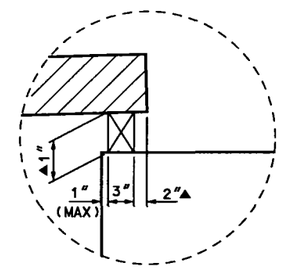

DETAIL 1

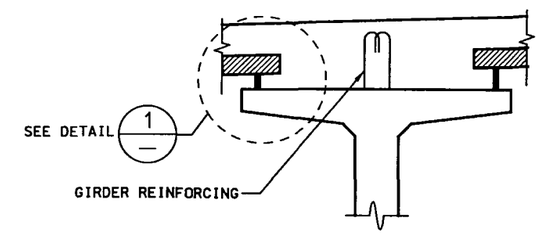

SUPPORT DETAIL

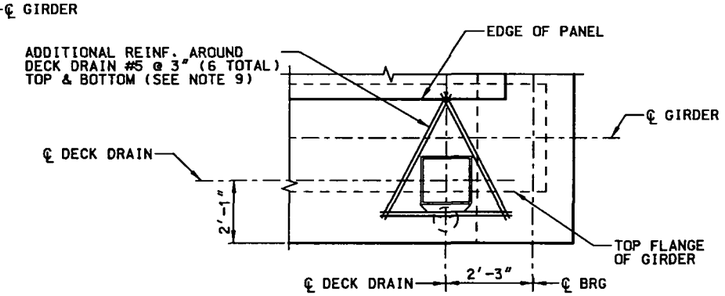

DETAIL 2

DESIGNED BY: MDV	ISSUE RECORD		
	NO.	DESCRIPTION	DATE
DRAFTED BY: KJS	A	IN-PROCESS DESIGN SUBMITTAL	24 SEP 02
	B	FINAL DESIGN SUBMITTAL	30 OCT 02
	1	APPROVED FOR CONSTRUCTION	22 NOV 02
CHECKED BY: DDH	AB	AS-BUILT	01FEB07

TREX METRO DENVER / COLORADO

Southeast Corridor Constructors, 7200 South Alton Way, Englewood, CO 80112

DMJM HARRIS, 717 17th Street, Suite 500, Denver, Colorado 80202, Phone: (303) 376-2900, Fax: (303) 376-2999

SOUTHEAST CORRIDOR MULTI-MODAL PROJECT
AREA 3.3
LRT OVER C-470
PRECAST PANEL DECK FORM (2)

STRUCTURE NO F-17-OW | SECC STRUCTURE NO 65

PROJECT NO./CODE NH 0252-299 11584

FILE NAME SE3B8306

DRAWING NUMBER S116

AS-BUILT

File Name: C:\PWWORKING\DMS04496\SE3B8306.DGN Pen Table: S:\MICROSTATION\PLOTTING\PENTABLES\T-REX-GRAY.TBL
User: PAUL.NIKOLAI Time Plotted: 07:31:34 AM Date Plotted: 02/01/2007

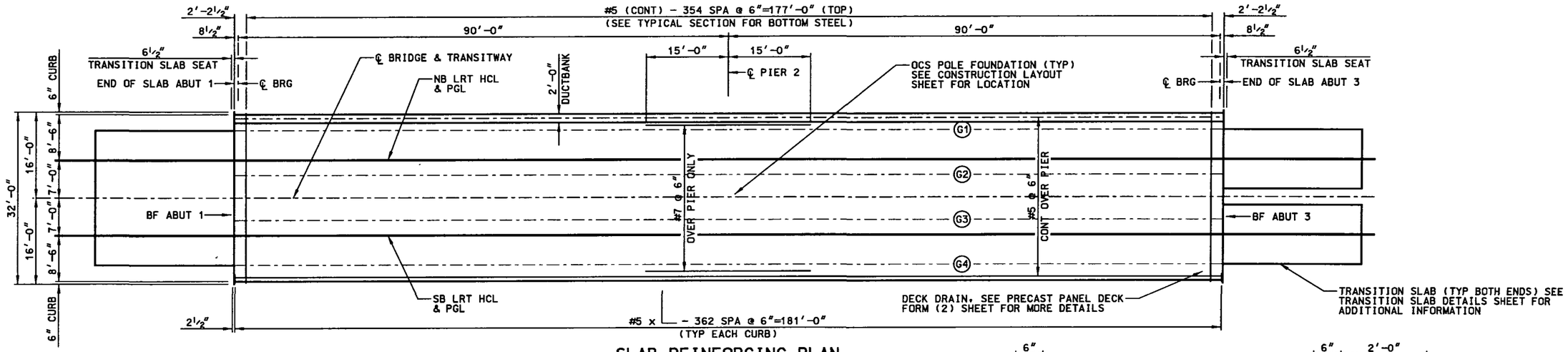

SLAB REINFORCING PLAN

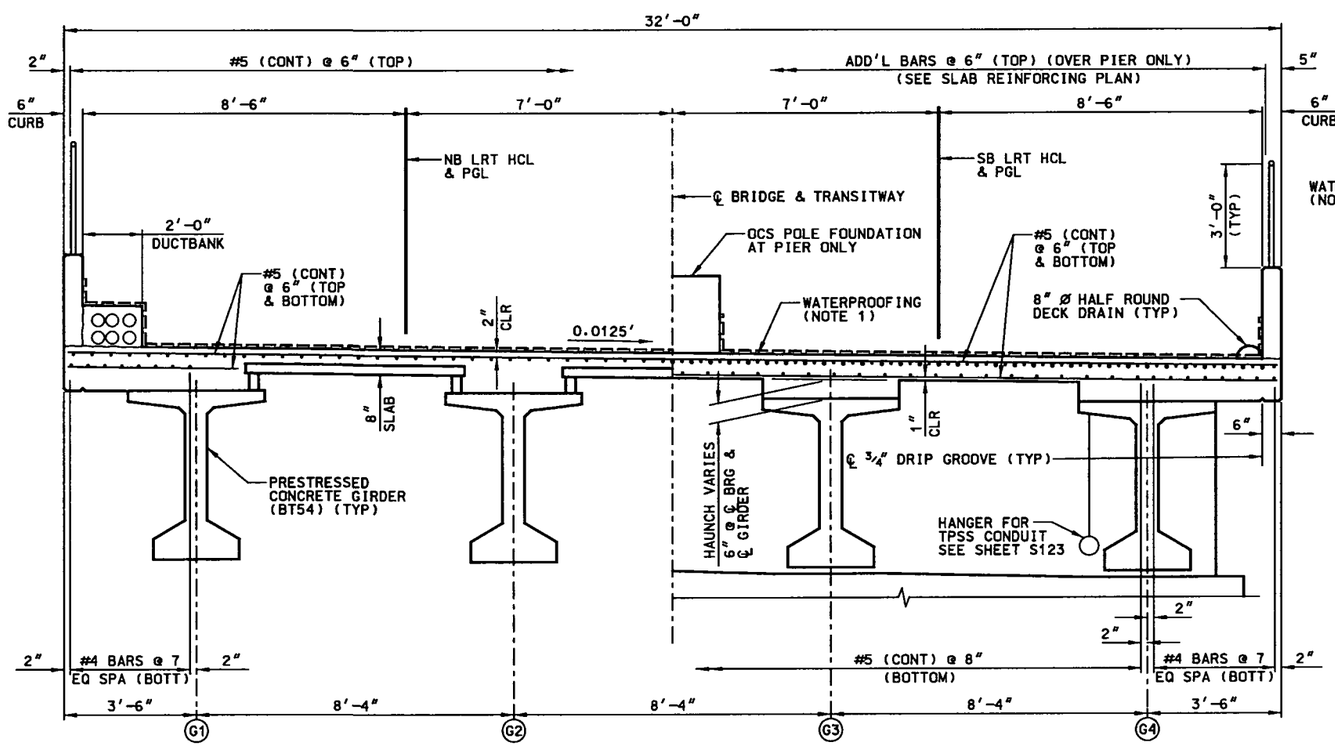

HALF SECTION @ MIDSPAN

HALF SECTION @ PIER

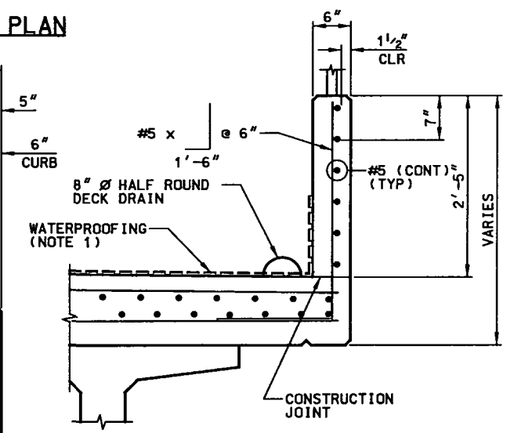

CURB REINFORCING DETAIL

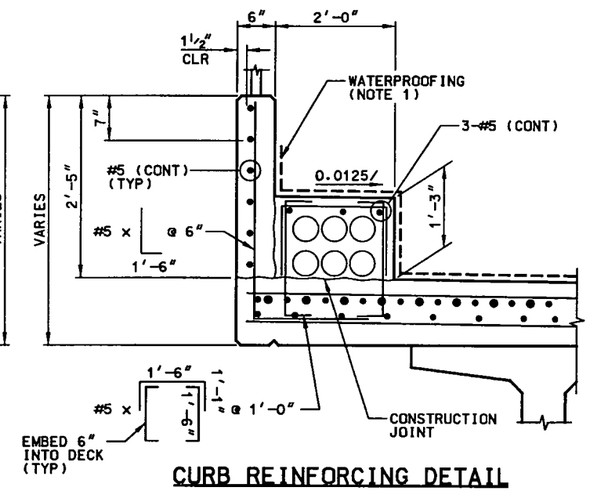

CURB REINFORCING DETAIL AT DUCTBANK

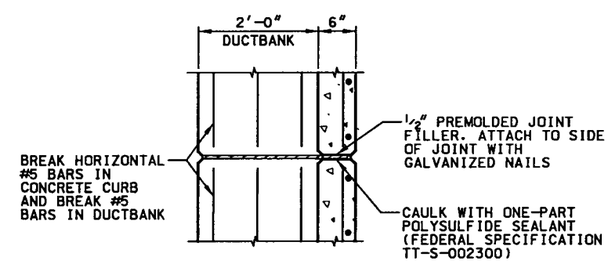

CURB & DUCT BANK JOINT DETAIL PLAN

NOTES:

1. SEE WATERPROOFING DETAILS SHEET.
2. JOINTS SHALL BE AT CENTERLINE PIER AND 16'-0" FROM CENTERLINE UPSTATION AND DOWNSTATION.

DESIGNED BY: MDV	ISSUE RECORD		
	NO.	DESCRIPTION	DATE
DRAFTED BY: KJS	A	IN-PROCESS DESIGN SUBMITTAL	24 SEP 02
	B	FINAL DESIGN SUBMITTAL	30 OCT 02
	1	APPROVED FOR CONSTRUCTION	22 NOV 02
CHECKED BY: DDH	AB	AS-BUILT	01FEB07

TREX METRO DENVER / COLORADO

Southeast Corridor Constructors
7200 South Alton Way
Englewood, CO 80112

DMJM HARRIS
717 17th Street, Suite 500
Denver, Colorado 80202
Phone: (303) 376-2900
Fax: (303) 376-2999

SOUTHEAST CORRIDOR MULTI-MODAL PROJECT
AREA 3.3
LRT OVER C-470
SUPERSTRUCTURE DETAILS

STRUCTURE NO F-17-OW | SECC STRUCTURE NO 65

PROJECT NO./CODE NH 0252-299 11584

FILE NAME SE3B6303

DRAWING NUMBER S117

AS-BUILT

File Name: C:\PWWORKING\DMS04496\SE3B6303.DGN Date Plotted: 02/01/2007
User: PAUL.NIKOLAI Time Plotted: 07:30:59 AM Pen Table: S:\MICROSTATION\PLOTTING\PENTABLES\T-REX-GRAY.TBL

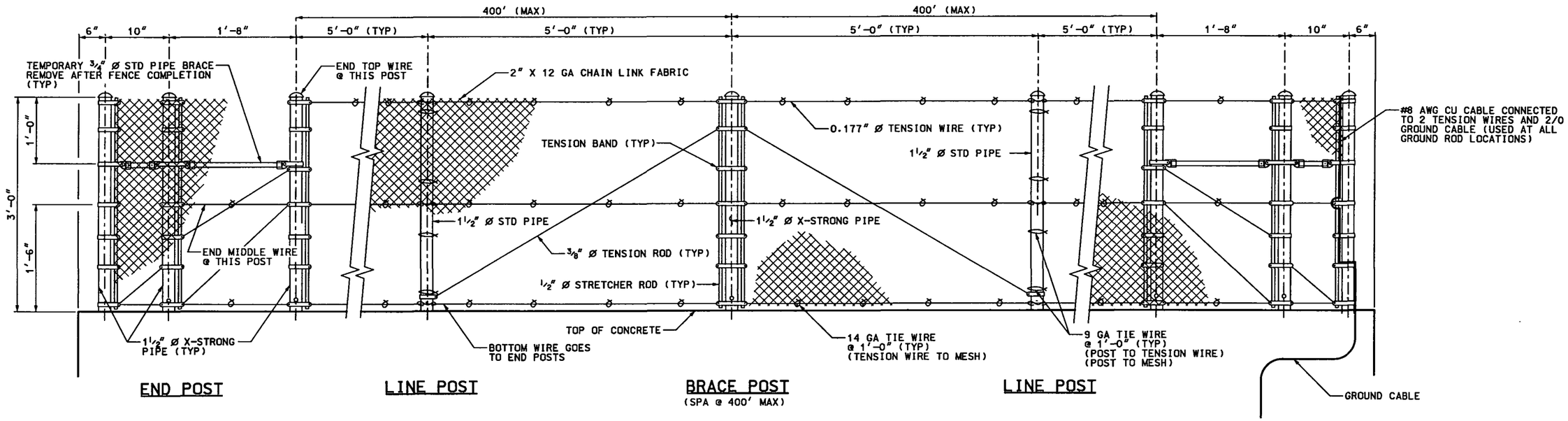

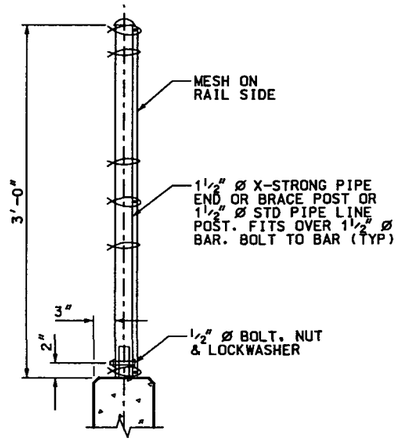

TYPICAL SECTION

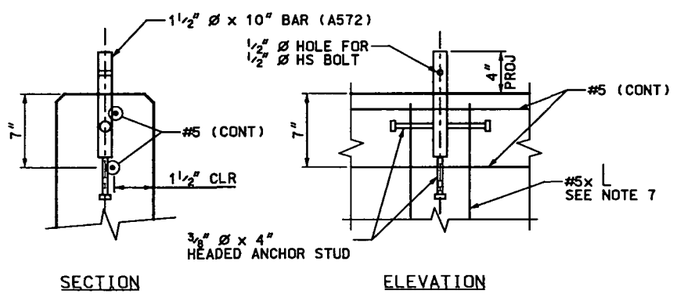

ANCHORAGE DETAIL

DESIGN DATA

TOTAL TENSION = 5400 LBS

TEST WITH: MAX MIDBAY DEFLECTION = 1 1/4" FOR LATERAL LOADS OF 160 LBS. ON 1 FT 1'-6" UP AT CENTER OF BAY

LIVE LOAD: WIND LOAD = 32 psf OR SNOW IMPACT LOAD = 96 plf @ 1'-6" UP

STRUCTURAL STEEL: PIPE Fy = 35,000 psi
ASTM A572 (GR 50) Fy = 50,000 psi

NOTES:

1. THE FENCE ASSEMBLY SHALL BE GALVANIZED AFTER FABRICATION. ANCHORAGES SHALL ONLY BE GALVANIZED AFTER FABICATION.
2. TENSION RODS AND WIRES SHALL HAVE TURNBUCKLES.
3. POST SHALL BE VERTICAL.
4. PIPE SHALL CONFORM TO ASTM A53 TYPE E OR S, GRADE B. (GALV)
5. SEE PSP340 "SCHEMATIC OVERVIEW FOR BRIDGE GROUNDING".
6. FENCE GROUND ROD INTERVAL SHALL NOT EXCEED 500 FEET.
7. SEE SUPERSTRUCTURE DETAILS SHEET FOR CURB REINFORCEMENT.
8. FENCE SHALL BE VINYL COATED STANDARD COLOR BLACK, MUNSELL COLOR SYSTEM NO. 1.8PB 1.26/0.5.

DESIGNED BY: MDV
DRAFTED BY: KJS
CHECKED BY: DDH

ISSUE RECORD

NO.	DESCRIPTION	DATE
A	IN-PROCESS DESIGN SUBMITTAL	24 SEP 02
B	FINAL DESIGN SUBMITTAL	30 OCT 02
1	APPROVED FOR CONSTRUCION	22 NOV 02
2	FDC S1100 - VINYL COATING FENCES, C.O. 105	23 FEB 04
AB	AS-BUILT	01FEB07

TREX METRO DENVER / COLORADO

Southeast Corridor Constructors
7200 South Alton Way
Englewood, CO 80112

DMJM HARRIS
717 17th Street, Suite 500
Denver, Colorado 80202
Phone: (303) 376-2900
Fax: (303) 376-2999

SOUTHEAST CORRIDOR MULTI-MODAL PROJECT
AREA 3.3
LRT OVER C-470
PROTECTIVE FENCE DETAILS

STRUCTURE NO F-17-OW
SECC STRUCTURE NO 65

PROJECT NO./CODE NH 0252-299 11584
FILE NAME SE3B8307
DRAWING NUMBER S118

AS-BUILT

File Name: C:\PWWORKING\DMS04496\SE3B8307.DGN
User: PAUL.NIKOLAI
Time Plotted: 07:31:38 AM
Date Plotted: 02/01/2007
Pen Table: S:\MICROSTATION\PLOTTING\PENTABLES\T-REX-GRAY.TBL

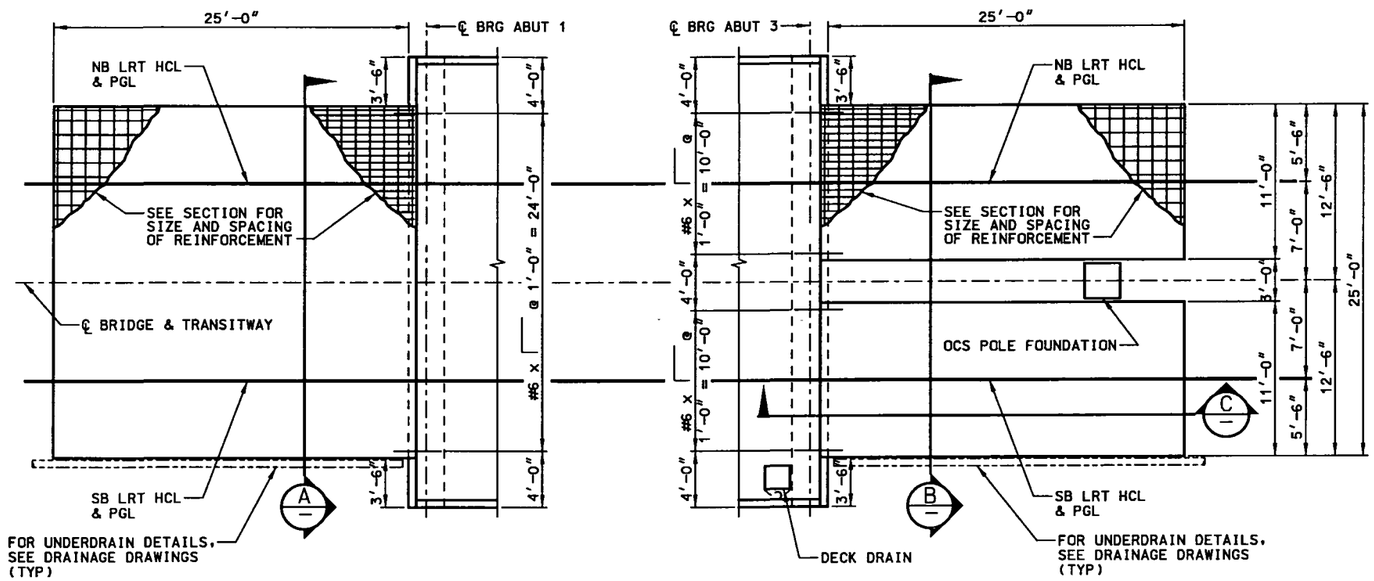

PLAN

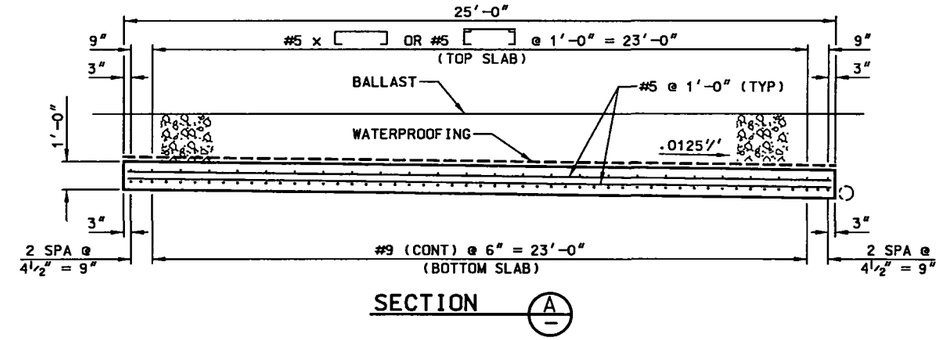

SECTION A

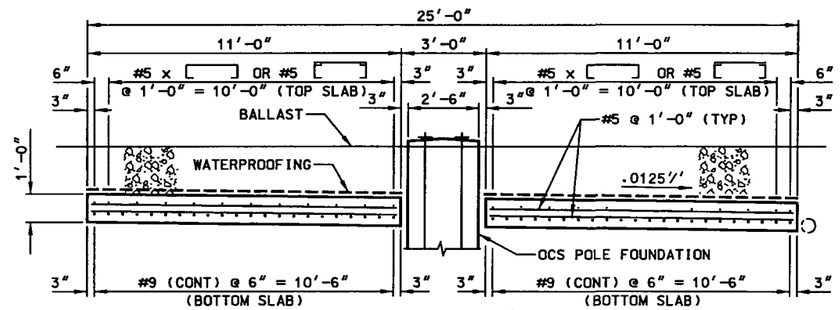

SECTION B

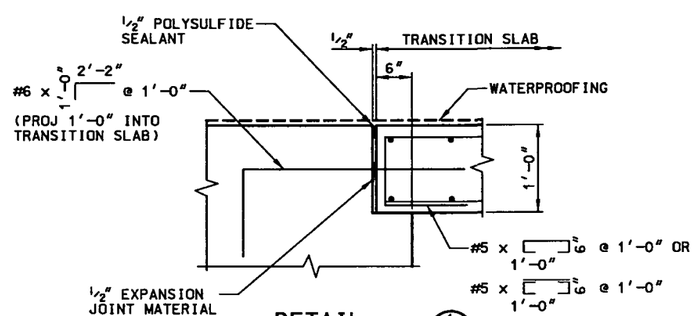

DETAIL 1

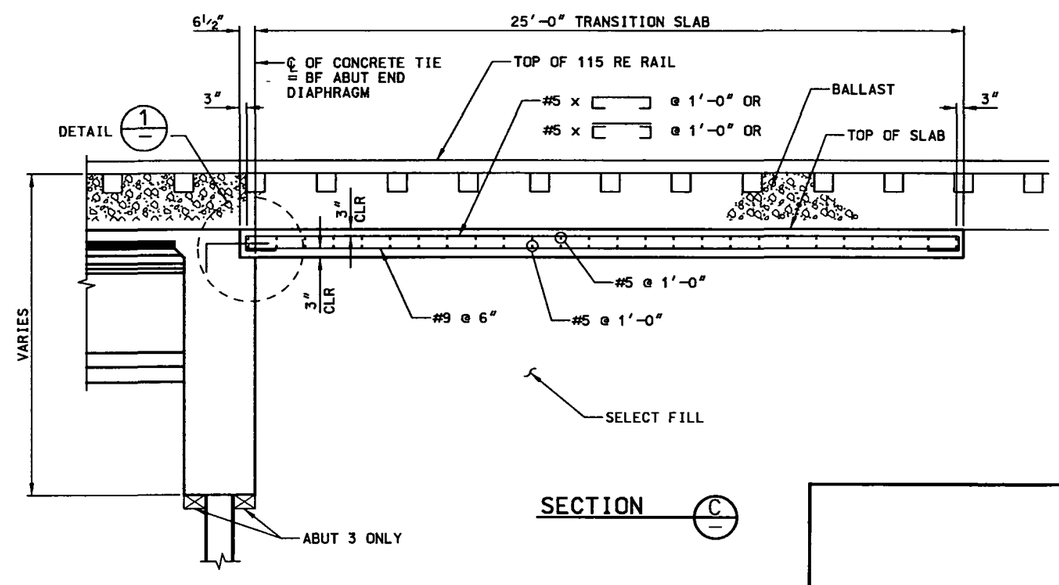

SECTION C

NOTES:

1. CONCRETE CLASS D (BRIDGE) SHALL BE USED FOR TRANSITION SLABS.
2. FOR DECK DRAIN SEE DRAINAGE DETAIL SHEET.

DESIGNED BY: MDV	ISSUE RECORD		
	NO.	DESCRIPTION	DATE
DRAFTED BY: KJS	A	IN-PROCESS DESIGN SUBMITTAL	24 SEP 02
	B	FINAL DESIGN SUBMITTAL	30 OCT 02
	1	APPROVED FOR CONSTRUCTION	22 NOV 02
CHECKED BY: DDH	AB	AS-BUILT	01FEB07

T-REX METRO DENVER / COLORADO

Southeast Corridor Constructors, 7200 South Alton Way, Englewood, CO 80112

DMJM HARRIS, 717 17th Street, Suite 500, Denver, Colorado 80202, Phone: (303) 376-2900, Fax: (303) 376-2999

SOUTHEAST CORRIDOR MULTI-MODAL PROJECT
AREA 3.3
LRT OVER C-470
TRANSITION SLAB DETAILS

STRUCTURE NO F-17-OW | SECC STRUCTURE NO 65

PROJECT NO./CODE NH 0252-299 11584

FILE NAME SE3B7301

DRAWING NUMBER S119

AS-BUILT

File Name: C:\PWWORKING\DMS04496\SE3B7301.DGN
User: PAUL.NIKOLAI
Time Plotted: 07:31:03 AM
Date Plotted: 02/01/2007
Pen Table: S:\MICROSTATION\PLOTTING\PENTABLES\T-REX-GRAY.TBL

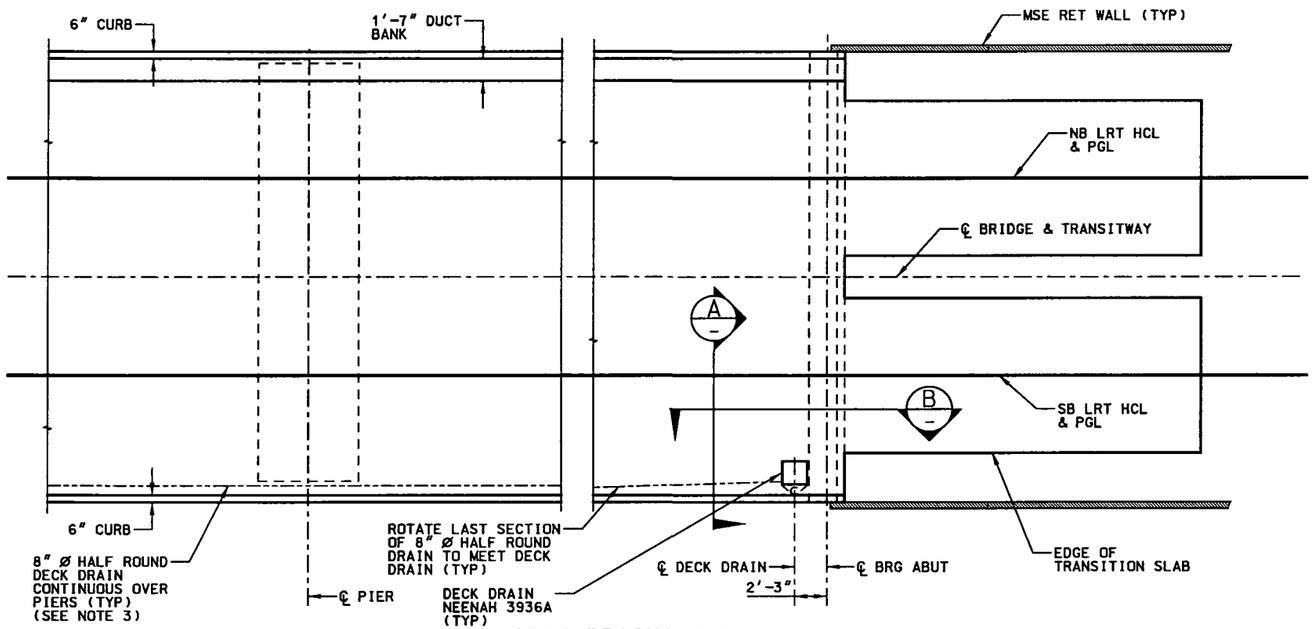

DECK DRAINAGE PLAN

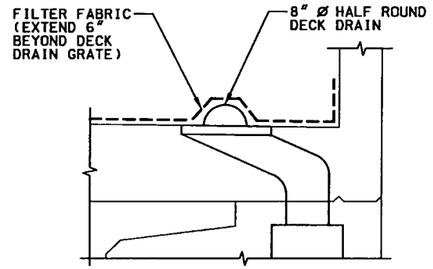

DETAIL 1

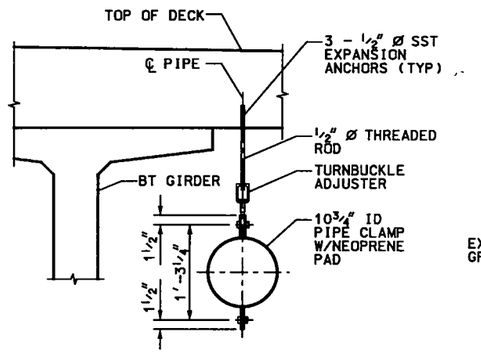

PIPE HANGER DETAIL

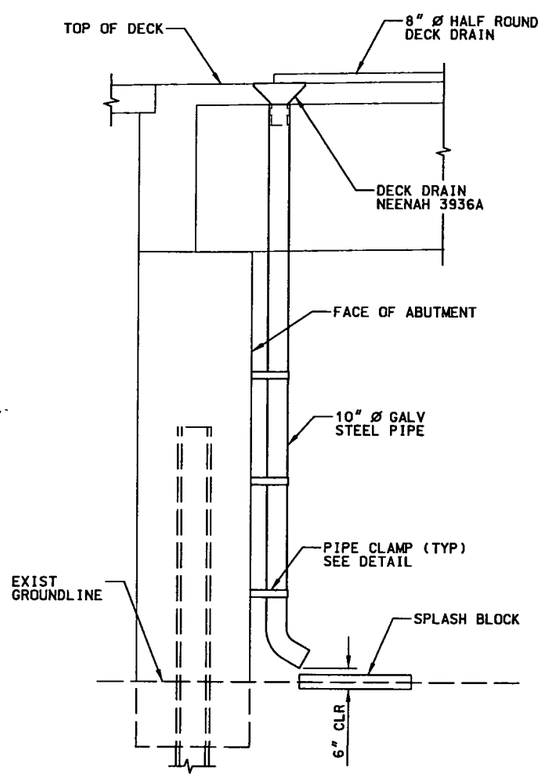

SECTION B

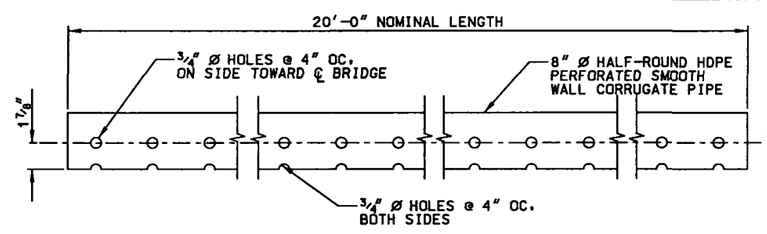

COVER

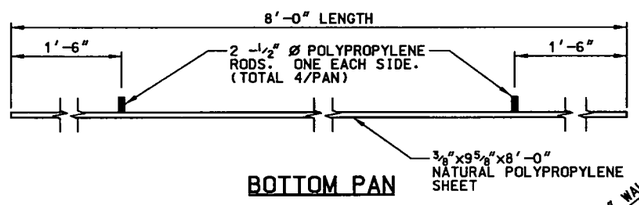

BOTTOM PAN

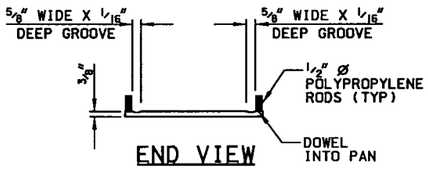

END VIEW

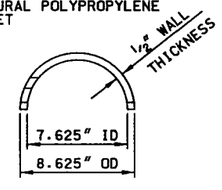

END VIEW

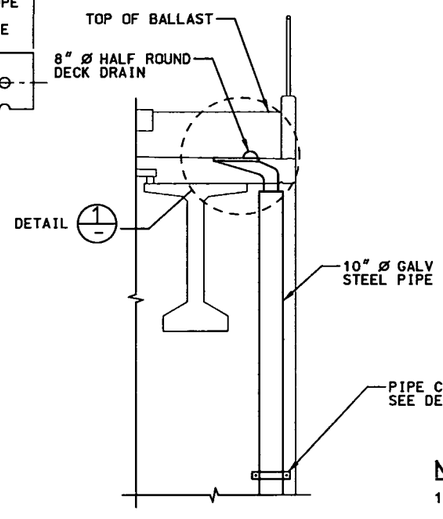

SECTION A

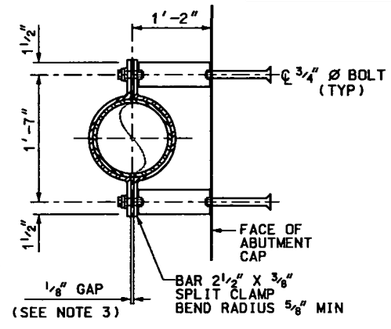

SECTION C

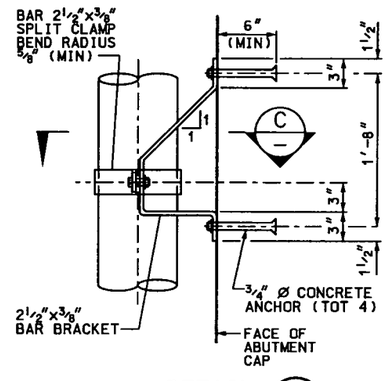

DETAIL 2

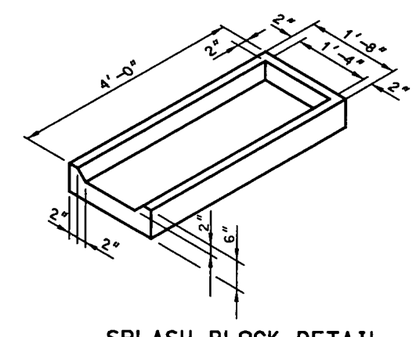

SPLASH BLOCK DETAIL

NOTES:

1. PLACE BOTTOM PANS END TO END AND TAPE (3/4" TEFLON) COVER SECTIONS TOGETHER.
2. ALL DIMENSIONS ARE TO BE TAKEN ALONG ℄ PIPE OR PAN.
3. SEE PRECAST PANEL DECK FORM (2) SHEET FOR ADD'L REINF.

DESIGNED BY: MDV	ISSUE RECORD		
	NO.	DESCRIPTION	DATE
DRAFTED BY: KJS	A	IN-PROCESS DESIGN SUBMITTAL	24 SEP 02
	B	FINAL DESIGN SUBMITTAL	30 OCT 02
	1	APPROVED FOR CONSTRUCTION	22 NOV 02
CHECKED BY: DDH	AB	AS-BUILT	01FEB07

TREX METRO DENVER / COLORADO

Southeast Corridor Constructors
7200 South Alton Way
Englewood, CO 80112

DMJM HARRIS
717 17th Street, Suite 500
Denver, Colorado 80202
Phone: (303) 376-2900
Fax: (303) 376-2999

SOUTHEAST CORRIDOR MULTI-MODAL PROJECT
AREA 3.3
LRT OVER C-470
DRAINAGE DETAILS

STRUCTURE NO F-17-OW | SECC STRUCTURE NO 65

PROJECT NO./CODE NH 0252-299 11584
FILE NAME SE3B8308
DRAWING NUMBER S120

AS-BUILT

File Name: C:\PWWORKING\DMS04496\SE3B8308.DGN
User: PAUL.NIKOLAI
Time Plotted: 07:31:42 AM
Date Plotted: 02/01/2007
Pen Table: S:\MICROSTATION\PLOTTING\PENTABLES\T-REX-GRAY.TBL

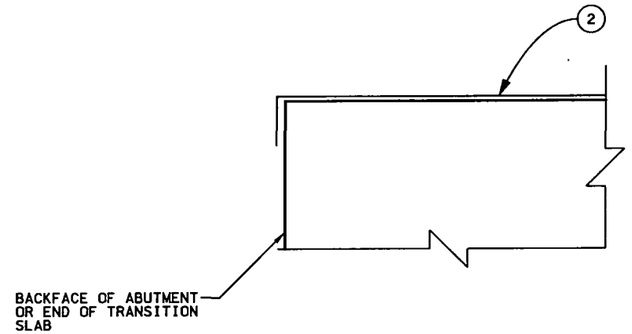

AT ABUTMENT W/O EXPANSION JOINT
OR END OF TRANSITION SLAB

LEGEND

1
2 RUBBERIZED ASPHALT AND PLASTIC FILM MEMBRANE WATERPROOFING
3
4

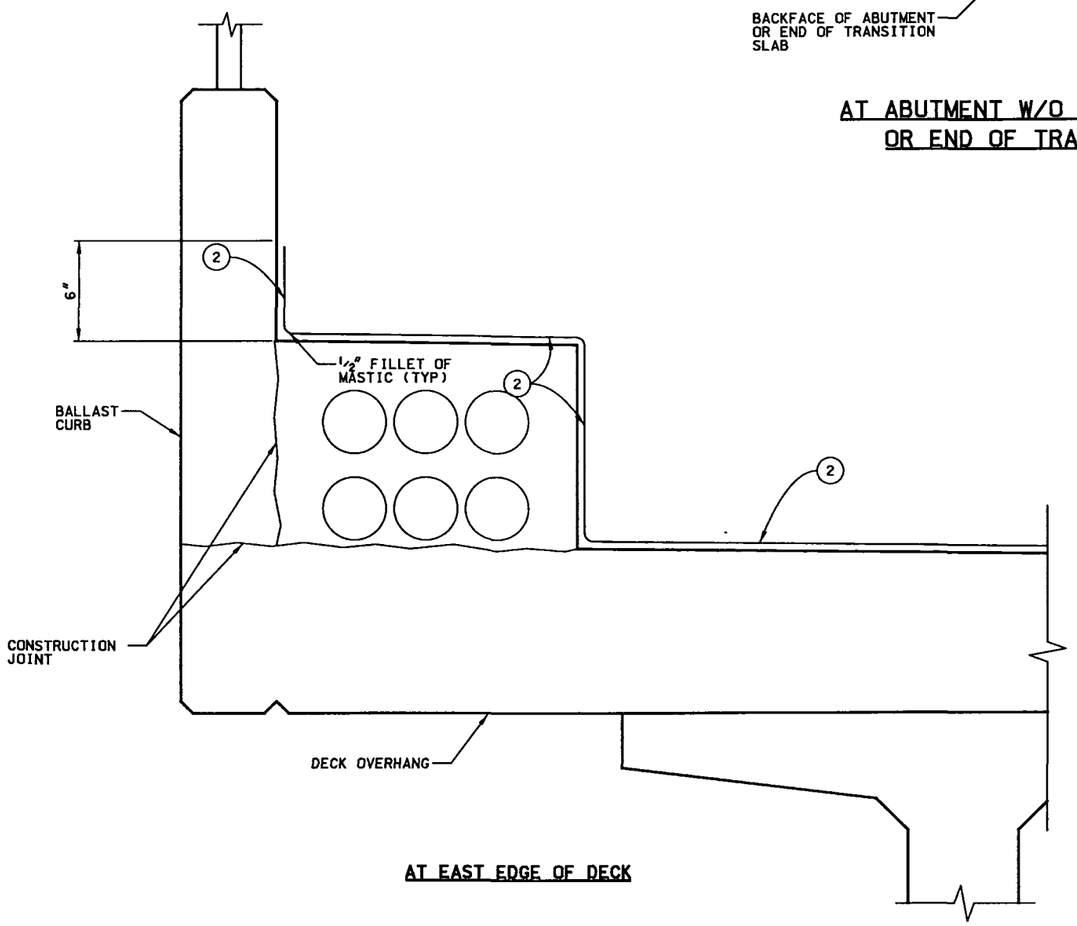

AT EAST EDGE OF DECK

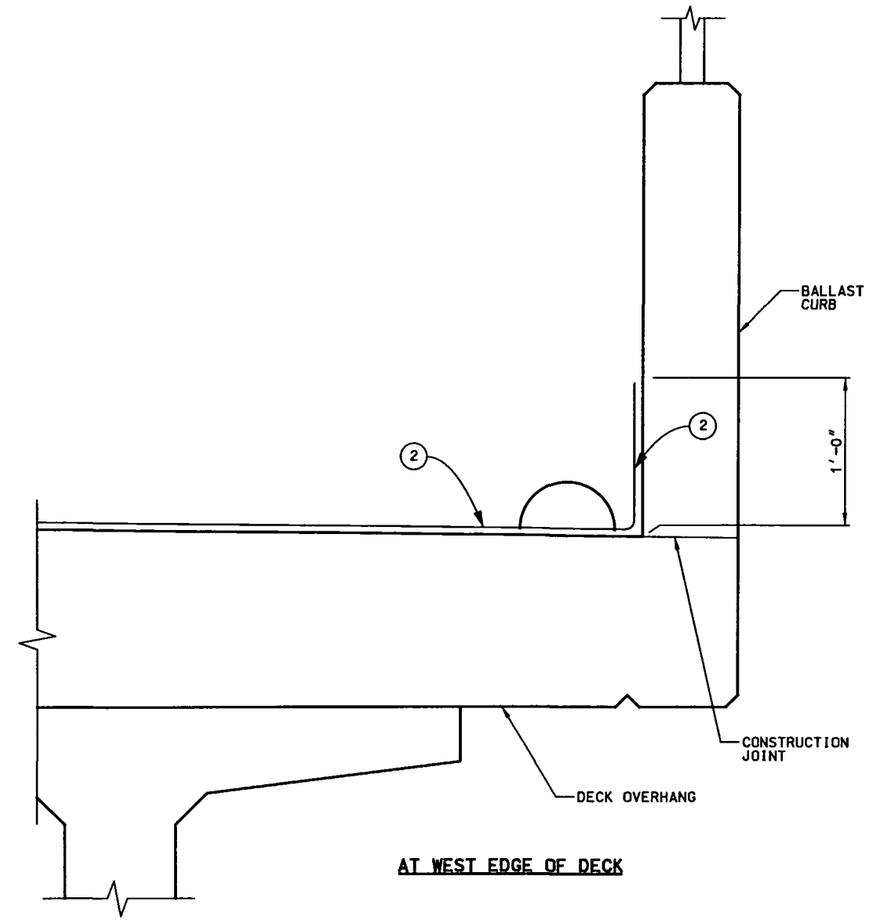

AT WEST EDGE OF DECK

WATERPROOFING DETAILS

DESIGNED BY: MDV	ISSUE RECORD		
	NO.	DESCRIPTION	DATE
DRAFTED BY: KJS	A	IN-PROCESS DESIGN SUBMITTAL	24SEP02
	B	FINAL DESIGN SUBMITTAL	30OCT02
CHECKED BY: DDH	1	APPROVED FOR CONSTRUCTION	22NOV02
	AB	AS-BUILT	01FEB07

TREX METRO DENVER / COLORADO
Southeast Corridor Constructors
7200 South Alton Way
Englewood, CO 80112

DMJM HARRIS
717 17th Street, Suite 500
Denver, Colorado 80202
Phone: (303) 376-2900
Fax: (303) 376-2999

SOUTHEAST CORRIDOR MULTI-MODAL PROJECT
AREA 3.3
LRT OVER C-470
WATERPROOFING DETAILS

STRUCTURE NO F-17-OW | SECC STRUCTURE NO 65

PROJECT NO./CODE NH 0252-299 11584
FILE NAME SE3B8309
DRAWING NUMBER S121

AS-BUILT

File Name: C:\PWWORKING\DMS04496\SE3B8309.DGN
User: PAUL.NIKOLAI
Time Plotted: 07:31:45 AM
Date Plotted: 02/01/2007
Pen Table: S:\MICROSTATION\PLOTTING\PENTABLES\T-REX-GRAY.TBL

BENT LINE DESCRIPTION OR FRACTIONAL POINT DESIGNATION	STATION	OFFSET	ELEVATION
LONGITUDINAL LINE - TOP OF EAST CURB			
BF ABUT 1	747+65.8000	-9.00	5887.65
CL ABUT 1	747+67.0500	-9.00	5887.63
F-1	747+76.0500	-9.00	5887.45
F-2	747+85.0500	-9.00	5887.26
F-3	747+94.0500	-9.00	5887.07
F-4	748+03.0500	-9.00	5886.87
F-5	748+12.0500	-9.00	5886.67
F-6	748+21.0500	-9.00	5886.47
F-7	748+30.0500	-9.00	5886.27
F-8	748+39.0500	-9.00	5886.07
F-9	748+48.0500	-9.00	5885.87
CL PIER 2	748+57.0500	-9.00	5885.67
F-1	748+66.0500	-9.00	5885.47
F-2	748+75.0500	-9.00	5885.27
F-3	748+84.0500	-9.00	5885.07
F-4	748+93.0500	-9.00	5884.87
F-5	749+02.0500	-9.00	5884.67
F-6	749+11.0500	-9.00	5884.47
F-7	749+20.0500	-9.00	5884.26
F-8	749+29.0500	-9.00	5884.06
F-9	749+38.0500	-9.00	5883.86
CL ABUT 3	749+47.0500	-9.00	5883.66
BF ABUT 3	749+48.3000	-9.00	5883.64
LONGITUDINAL LINE - EAST EDGE OF DECK			
BF ABUT 1	747+65.8000	-9.00	5885.23
CL ABUT 1	747+67.0500	-9.00	5885.21
F-1	747+76.0500	-9.00	5885.03
F-2	747+85.0500	-9.00	5884.84
F-3	747+94.0500	-9.00	5884.65
F-4	748+03.0500	-9.00	5884.45
F-5	748+12.0500	-9.00	5884.25
F-6	748+21.0500	-9.00	5884.05
F-7	748+30.0500	-9.00	5883.85
F-8	748+39.0500	-9.00	5883.65
F-9	748+48.0500	-9.00	5883.45
CL PIER 2	748+57.0500	-9.00	5883.25
F-1	748+66.0500	-9.00	5883.05
F-2	748+75.0500	-9.00	5882.85
F-3	748+84.0500	-9.00	5882.65
F-4	748+93.0500	-9.00	5882.45
F-5	749+02.0500	-9.00	5882.25
F-6	749+11.0500	-9.00	5882.05
F-7	749+20.0500	-9.00	5881.85
F-8	749+29.0500	-9.00	5881.65
F-9	749+38.0500	-9.00	5881.45
CL ABUT 3	749+47.0500	-9.00	5881.25
BF ABUT 3	749+48.3000	-9.00	5881.22
LONGITUDINAL LINE - GIRDER 1			
BF ABUT 1	747+65.8000	-5.50	5885.19
CL ABUT 1	747+67.0500	-5.50	5885.17
F-1	747+76.0500	-5.50	5884.99
F-2	747+85.0500	-5.50	5884.80
F-3	747+94.0500	-5.50	5884.61
F-4	748+03.0500	-5.50	5884.41
F-5	748+12.0500	-5.50	5884.21
F-6	748+21.0500	-5.50	5884.01

BENT LINE DESCRIPTION OR FRACTIONAL POINT DESIGNATION	STATION	OFFSET	ELEVATION
LONGITUDINAL LINE - GIRDER 1			
F-7	748+30.0500	-5.50	5883.81
F-8	748+39.0500	-5.50	5883.61
F-9	748+48.0500	-5.50	5883.41
CL PIER 2	748+57.0500	-5.50	5883.21
F-1	748+66.0500	-5.50	5883.01
F-2	748+75.0500	-5.50	5882.81
F-3	748+84.0500	-5.50	5882.60
F-4	748+93.0500	-5.50	5882.40
F-5	749+02.0500	-5.50	5882.20
F-6	749+11.0500	-5.50	5882.00
F-7	749+20.0500	-5.50	5881.80
F-8	749+29.0500	-5.50	5881.60
F-9	749+38.0500	-5.50	5881.40
CL ABUT 3	749+47.0500	-5.50	5881.20
BF ABUT 3	749+48.3000	-5.50	5881.18
LONGITUDINAL LINE - NB LRT HCL			
BF ABUT 1	747+65.8000	0.00	5885.12
CL ABUT 1	747+67.0500	0.00	5885.10
F-1	747+76.0500	0.00	5884.92
F-2	747+85.0500	0.00	5884.73
F-3	747+94.0500	0.00	5884.54
F-4	748+03.0500	0.00	5884.34
F-5	748+12.0500	0.00	5884.14
F-6	748+21.0500	0.00	5883.94
F-7	748+30.0500	0.00	5883.74
F-8	748+39.0500	0.00	5883.54
F-9	748+48.0500	0.00	5883.34
CL PIER 2	748+57.0500	0.00	5883.14
F-1	748+66.0500	0.00	5882.94
F-2	748+75.0500	0.00	5882.74
F-3	748+84.0500	0.00	5882.54
F-4	748+93.0500	0.00	5882.34
F-5	749+02.0500	0.00	5882.14
F-6	749+11.0500	0.00	5881.94
F-7	749+20.0500	0.00	5881.74
F-8	749+29.0500	0.00	5881.54
F-9	749+38.0500	0.00	5881.34
CL ABUT 3	749+47.0500	0.00	5881.14
BF ABUT 3	749+48.3000	0.00	5881.11
LONGITUDINAL LINE - GIRDER 2			
BF ABUT 1	747+65.8000	2.83	5885.08
CL ABUT 1	747+67.0500	2.83	5885.06
F-1	747+76.0500	2.83	5884.88
F-2	747+85.0500	2.83	5884.70
F-3	747+94.0500	2.83	5884.50
F-4	748+03.0500	2.83	5884.30
F-5	748+12.0500	2.83	5884.10
F-6	748+21.0500	2.83	5883.90
F-7	748+30.0500	2.83	5883.70
F-8	748+39.0500	2.83	5883.50
F-9	748+48.0500	2.83	5883.30
CL PIER 2	748+57.0500	2.83	5883.10
F-1	748+66.0500	2.83	5882.90
F-2	748+75.0500	2.83	5882.70
F-3	748+84.0500	2.83	5882.50
F-4	748+93.0500	2.83	5882.30
F-5	749+02.0500	2.83	5882.10

BENT LINE DESCRIPTION OR FRACTIONAL POINT DESIGNATION	STATION	OFFSET	ELEVATION
LONGITUDINAL LINE - GIRDER 2			
F-6	749+11.0500	2.83	5881.90
F-7	749+20.0500	2.83	5881.70
F-8	749+29.0500	2.83	5881.50
F-9	749+38.0500	2.83	5881.30
CL ABUT 3	749+47.0500	2.83	5881.10
BF ABUT 3	749+48.3000	2.83	5881.07
LONGITUDINAL LINE - GIRDER 3			
BF ABUT 1	747+65.8000	11.17	5884.98
CL ABUT 1	747+67.0500	11.17	5884.96
F-1	747+76.0500	11.17	5884.78
F-2	747+85.0500	11.17	5884.59
F-3	747+94.0500	11.17	5884.40
F-4	748+03.0500	11.17	5884.20
F-5	748+12.0500	11.17	5884.00
F-6	748+21.0500	11.17	5883.80
F-7	748+30.0500	11.17	5883.60
F-8	748+39.0500	11.17	5883.40
F-9	748+48.0500	11.17	5883.20
CL PIER 2	748+57.0500	11.17	5883.00
F-1	748+66.0500	11.17	5882.80
F-2	748+75.0500	11.17	5882.60
F-3	748+84.0500	11.17	5882.40
F-4	748+93.0500	11.17	5882.20
F-5	749+02.0500	11.17	5882.00
F-6	749+11.0500	11.17	5881.80
F-7	749+20.0500	11.17	5881.60
F-8	749+29.0500	11.17	5881.40
F-9	749+38.0500	11.17	5881.20
CL ABUT 3	749+47.0500	11.17	5881.00
BF ABUT 3	749+48.3000	11.17	5880.97
LONGITUDINAL LINE - SB LRT HCL			
BF ABUT 1	747+65.8000	14.00	5884.95
CL ABUT 1	747+67.0500	14.00	5884.92
F-1	747+76.0500	14.00	5884.74
F-2	747+85.0500	14.00	5884.56
F-3	747+94.0500	14.00	5884.36
F-4	748+03.0500	14.00	5884.16
F-5	748+12.0500	14.00	5883.96
F-6	748+21.0500	14.00	5883.76
F-7	748+30.0500	14.00	5883.56
F-8	748+39.0500	14.00	5883.36
F-9	748+48.0500	14.00	5883.16
CL PIER 2	748+57.0500	14.00	5882.96
F-1	748+66.0500	14.00	5882.76
F-2	748+75.0500	14.00	5882.56
F-3	748+84.0500	14.00	5882.36
F-4	748+93.0500	14.00	5882.16
F-5	749+02.0500	14.00	5881.96
F-6	749+11.0500	14.00	5881.76
F-7	749+20.0500	14.00	5881.56
F-8	749+29.0500	14.00	5881.36
F-9	749+38.0500	14.00	5881.16
CL ABUT 3	749+47.0500	14.00	5880.96
BF ABUT 3	749+48.3000	14.00	5880.93

BENT LINE DESCRIPTION OR FRACTIONAL POINT DESIGNATION	STATION	OFFSET	ELEVATION
LONGITUDINAL LINE - GIRDER 4			
BF ABUT 1	747+65.8000	19.50	5884.88
CL ABUT 1	747+67.0500	19.50	5884.85
F-1	747+76.0500	19.50	5884.67
F-2	747+85.0500	19.50	5884.49
F-3	747+94.0500	19.50	5884.29
F-4	748+03.0500	19.50	5884.09
F-5	748+12.0500	19.50	5883.89
F-6	748+21.0500	19.50	5883.69
F-7	748+30.0500	19.50	5883.49
F-8	748+39.0500	19.50	5883.29
F-9	748+48.0500	19.50	5883.09
CL PIER 2	748+57.0500	19.50	5882.89
F-1	748+66.0500	19.50	5882.69
F-2	748+75.0500	19.50	5882.49
F-3	748+84.0500	19.50	5882.29
F-4	748+93.0500	19.50	5882.09
F-5	749+02.0500	19.50	5881.89
F-6	749+11.0500	19.50	5881.69
F-7	749+20.0500	19.50	5881.49
F-8	749+29.0500	19.50	5881.29
F-9	749+38.0500	19.50	5881.09
CL ABUT 3	749+47.0500	19.50	5880.89
BF ABUT 3	749+48.3000	19.50	5880.86
LONGITUDINAL LINE - WEST EDGE OF DECK			
BF ABUT 1	747+65.8000	23.00	5884.83
CL ABUT 1	747+67.0500	23.00	5884.81
F-1	747+76.0500	23.00	5884.63
F-2	747+85.0500	23.00	5884.44
F-3	747+94.0500	23.00	5884.25
F-4	748+03.0500	23.00	5884.05
F-5	748+12.0500	23.00	5883.85
F-6	748+21.0500	23.00	5883.65
F-7	748+30.0500	23.00	5883.45
F-8	748+39.0500	23.00	5883.25
F-9	748+48.0500	23.00	5883.05
CL PIER 2	748+57.0500	23.00	5882.85
F-1	748+66.0500	23.00	5882.65
F-2	748+75.0500	23.00	5882.45
F-3	748+84.0500	23.00	5882.25
F-4	748+93.0500	23.00	5882.05
F-5	749+02.0500	23.00	5881.85
F-6	749+11.0500	23.00	5881.65
F-7	749+20.0500	23.00	5881.45
F-8	749+29.0500	23.00	5881.25
F-9	749+38.0500	23.00	5881.05
CL ABUT 3	749+47.0500	23.00	5880.85
BF ABUT 3	749+48.3000	23.00	5880.82
LONGITUDINAL LINE - TOP OF WEST CURB			
BF ABUT 1	747+65.8000	23.00	5887.25
CL ABUT 1	747+67.0500	23.00	5887.23
F-1	747+76.0500	23.00	5887.05
F-2	747+85.0500	23.00	5886.86
F-3	747+94.0500	23.00	5886.67
F-4	748+03.0500	23.00	5886.47
F-5	748+12.0500	23.00	5886.27
F-6	748+21.0500	23.00	5886.07

BENT LINE DESCRIPTION OR FRACTIONAL POINT DESIGNATION	STATION	OFFSET	ELEVATION
LONGITUDINAL LINE - TOP OF WEST CURB			
F-7	748+30.0500	23.00	5885.87
F-8	748+39.0500	23.00	5885.67
F-9	748+48.0500	23.00	5885.47
CL PIER 2	748+57.0500	23.00	5885.27
F-1	748+66.0500	23.00	5885.07
F-2	748+75.0500	23.00	5884.87
F-3	748+84.0500	23.00	5884.67
F-4	748+93.0500	23.00	5884.47
F-5	749+02.0500	23.00	5884.27
F-6	749+11.0500	23.00	5884.07
F-7	749+20.0500	23.00	5883.86
F-8	749+29.0500	23.00	5883.66
F-9	749+38.0500	23.00	5883.46
CL ABUT 3	749+47.0500	23.00	5883.26
BF ABUT 3	749+48.3000	23.00	5883.24

NOTES:

1. LOOKING UPSTATION, OFFSET IS NEGATIVE TO THE LEFT OF HCL, AND POSITIVE TO THE RIGHT OF HCL.
2. ELEVATIONS ARE AT THE TOP OF CONCRETE DECK, 2'-3¼" BELOW (NB) PGL EXCEPT FOR TOP OF CURB. (SEE TYPICAL SECTION SHEET)

Pen Table: S:\MICROSTATION\PLOTTING\PENTABLES\T-REX-GRAY.TBL
Date Plotted: 02/01/2007
Time Plotted: 07:32:06 AM
File Name: C:\PWWORKING\DMS04496\SE3B8310.DGN
User: PAUL.NIKOLAI

DESIGNED BY: MDV
DRAFTED BY: KJS
CHECKED BY: DDH

ISSUE RECORD

NO.	DESCRIPTION	DATE
A	IN-PROCESS DESIGN SUBMITTAL	24 SEP 02
B	FINAL DESIGN SUBMITTAL	30 OCT 02
1	APPROVED FOR CONSTRUCTION	22 NOV 02
AB	AS-BUILT	01FEB07

TREX METRO DENVER / COLORADO

Southeast Corridor Constructors
7200 South Alton Way
Englewood, CO 80112

DMJM HARRIS
717 17th Street, Suite 500
Denver, Colorado 80202
Phone: (303) 376-2900
Fax: (303) 376-2999

SOUTHEAST CORRIDOR MULTI-MODAL PROJECT
AREA 3.3
LRT OVER C-470
BRIDGE DECK ELEVATIONS

STRUCTURE NO F-17-OW
SECC STRUCTURE NO 65

PROJECT NO./CODE
NH 0252-299
11584

FILE NAME SE3B8310

DRAWING NUMBER S122

AS-BUILT

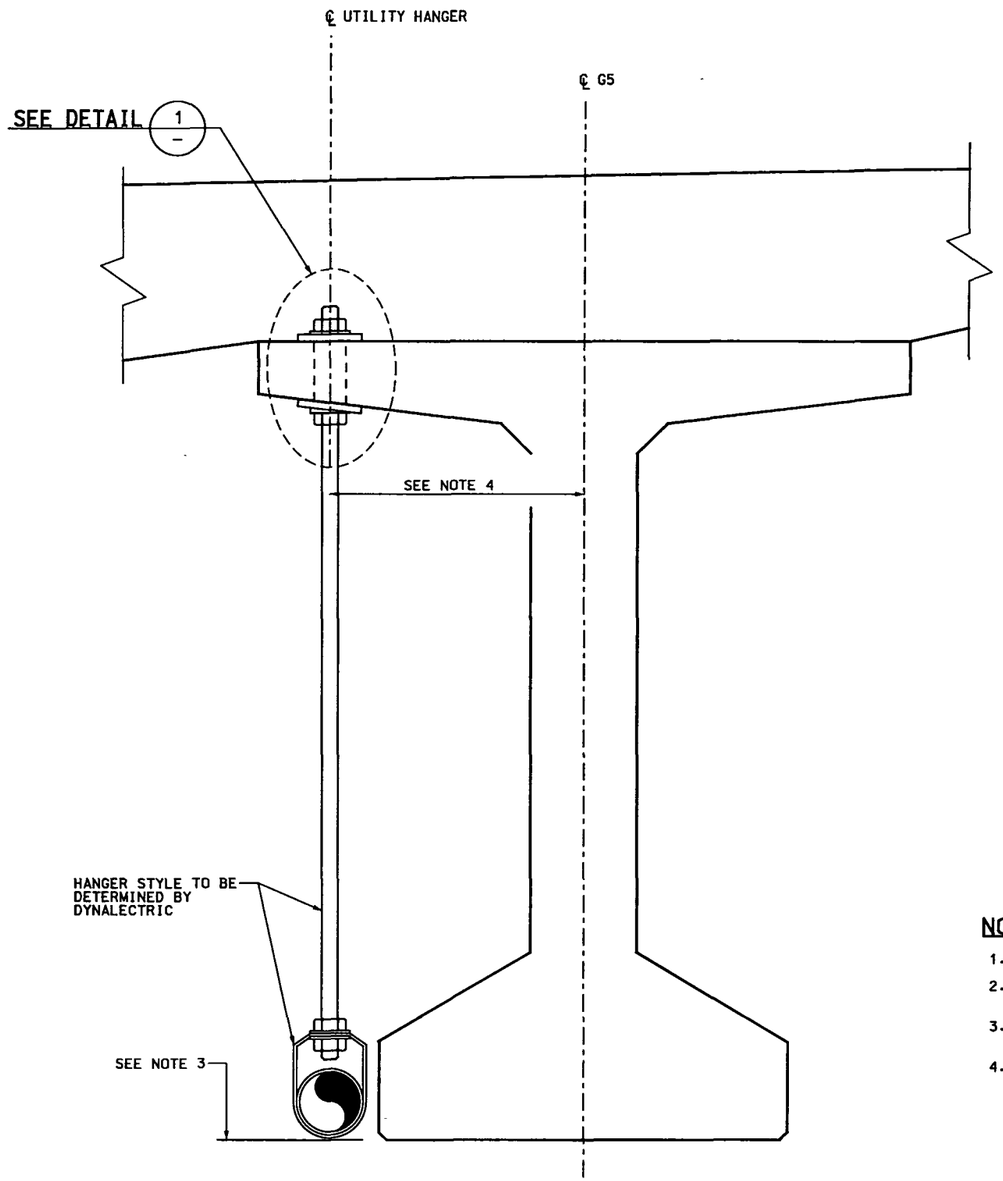

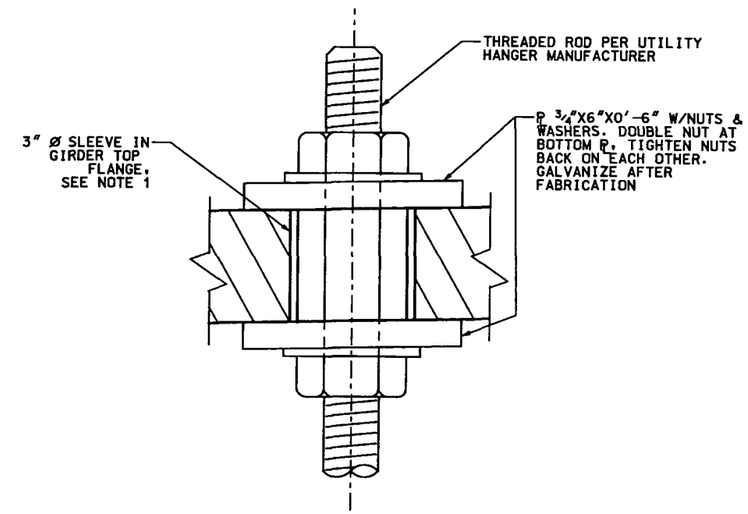

DETAIL 1

NOTES:

1. EDGE OF SLEEVE TO EDGE OF FLANGE = 3" MIN
2. ELECTRICAL LINE WEIGHT = 10.75 LBS/LF. HANGER SPACING = 18'-0" MAX.
3. DISTANCE BETWEEN BOTTOM OF HANGER AND BOTTOM OF GIRDER MAY VARY 0" TO 2"
4. THE HANGER SHALL BE PLACED AS TO HAVE 1/2" CLEAR FROM THE BOTTOM FLANGE OF THE GIRDER TO THE HANGER

DESIGNED BY:	ALC
DRAFTED BY:	ALC
CHECKED BY:	ALC

ISSUE RECORD

NO.	DESCRIPTION	DATE
AB	AS-BUILT	01FEB07

TREX METRO DENVER / COLORADO

Southeast Corridor Constructors
7200 South Alton Way
Englewood, CO 80112

SOUTHEAST CORRIDOR CONSTRUCTORS

SOUTHEAST CORRIDOR MULTI-MODAL PROJECT
AREA 3.3
LRT OVER C-470
TPSS CONDUIT DETAILS

STRUCTURE NO F-17-OW | SECC STRUCTURE NO 65

PROJECT NO./CODE NH 0252-299 11584
FILE NAME SE3B8325
DRAWING NUMBER S123

AS-BUILT

File Name: C:\PWWORKING\DMS04496\SE3B8325.DGN
User: PAUL.NIKOLAI
Time Plotted: 07:32:26 AM
Date Plotted: 02/01/2007
Pen Table: S:\MICROSTATION\PLOTTING\PENTABLES\T-REX-GRAY.TBL