GENERAL NOTES

EXCEPT AS SHOWN ON THE PLANS, STRUCTURE EXCAVATION AND BACKFILL SHALL BE IN ACCORDANCE WITH M-206-1.

EXPANSION JOINT MATERIAL SHALL MEET AASHTO SPECIFICATION M213.

GRADE 60 REINFORCING STEEL IS REQUIRED.

ALL REINFORCING STEEL SHALL BE NON COATED UNLESS OTHERWISE NOTED.

Ⓔ DENOTES COATED REINFORCING STEEL.

THE FOLLOWING TABLE GIVES THE MINIMUM LAP SPLICE LENGTH FOR EPOXY COATED REINFORCING BARS PLACED IN ACCORDANCE WITH SUBSECTION 602.06. THESE SPLICE LENGTHS SHALL BE INCREASED BY 25% FOR BARS SPACED AT LESS THAN 6" ON CENTER.

BAR SIZE	#4	#5	#6	#7	#8	#9	#10	#11
SPLICE LENGTH FOR CLASS D CONCRETE	1'-3"	1'-7"	2'-5"	2'-10"	3'-8"	4'-8"	5'-11"	7'-3"

WHEN THE CONTRACTOR ELECTS TO SUBSTITUTE EPOXY COATED REINFORCEMENT FOR BLACK REINFORCING BARS, THE MINIMUM LAP SPLICE SHALL BE AS DESCRIBED ABOVE.

THE FOLLOWING TABLE GIVES THE MINIMUM LAP SPLICE LENGTH FOR BLACK REINFORCING BARS PLACED IN ACCORDANCE WITH SUBSECTION 602.06. THESE SPLICE LENGTHS SHALL BE INCREASED BY 25% FOR BARS SPACED AT LESS THAN 6" ON CENTER.

BAR SIZE	#4	#5	#6	#7	#8	#9	#10	#11
SPLICE LENGTH FOR CLASS D CONCRETE	1'-1"	1'-4"	1'-7"	1'-11"	2'-6"	3'-1"	3'-11"	4'-10"

THE ABOVE SPLICE LENGTHS MAY BE REDUCED BY 20% WHEN 3" OF CLEAR COVER EXISTS AND BAR SPACING IS 6" OR GREATER ON CENTER.

THE CONTRACTOR SHALL BE RESPONSIBLE FOR THE STABILITY OF THE STRUCTURE DURING CONSTRUCTION.

E.F. = EACH FACE
F.F. = FAR FACE
N.F. = NEAR FACE
B.F. = BACK FACE
M.S.E = MECHANICALLY STABILIZED EARTH
D.H. = DESIGN HEIGHT OF WALL

DESIGN HEIGHT OF WALL IS NOT THE ACTUAL HEIGHT OF WALL.

STATIONS, ELEVATIONS, AND DIMENSIONS CONTAINED IN THESE PLANS ARE CALCULATED FROM THE "AS CONSTRUCTED PLANS" AND A RECENT FIELD SURVEY. THESE STATIONS, ELEVATIONS, AND DIMENSIONS MAY BE ADJUSTED TO MEET THE EXISTING STRUCTURE. THE CONTRACTOR SHALL VERIFY ALL DEPENDENT DIMENSIONS IN THE FIELD BEFORE ORDERING OR FABRICATING ANY MATERIAL.

THE INFORMATION SHOWN ON THESE PLANS CONCERNING THE TYPE AND LOCATION OF UNDERGROUND UTILITIES IS NOT GUARANTEED TO BE ACCURATE OR ALL INCLUSIVE. THE CONTRACTOR IS RESPONSIBLE FOR MAKING THEIR OWN DETERMINATION AS TO THE TYPE AND LOCATION OF UNDERGROUND UTILITIES AS MAY BE NECESSARY TO AVOID DAMAGE THERETO. THE CONTRACTOR SHALL CONTACT THE UTILITY NOTIFICATION CENTER OF COLORADO AT 1-800-922-1987 AT LEAST 2 DAYS (NOT INCLUDING THE DAY OF NOTIFICATION) PRIOR TO ANY EXCAVATION OR OTHER EARTHWORK.

REINFORCING STEEL WORKING DRAWINGS SHALL SHOW ALL FOOTING AND STEP GEOMETRICS. ORIENTATIONS OF STEPS AT WALL POINTS OF INFLECTION SHALL BE INCLUDED.

DESIGN DATA

DESIGN METHOD: LOAD AND RESISTANCE FACTOR DESIGN
AASHTO LRFD BRIDGE DESIGN SPECIFICATIONS, 4TH ED. 2007 W/2008 & 2009 INTERIMS.
AASHTO, 16TH EDITION WITHOUT INTERIMS FOR INTERNAL DESIGN OF M.S.E. WALLS AND PIPE RAILING.

REINFORCED CONCRETE:

CLASS B CONCRETE (WALL): f'c = 3,000 psi
CLASS D CONCRETE (WALL): f'c = 4,500 psi
REINFORCING STEEL: fy = 60,000 psi

SEISMIC DESIGN CRITERIA:

SEISMIC ZONE 1 A = 0.025g

LIVE LOADS:

TRAIL = 85 psf
ROADWAY = 2 ft SURCHARGE

GEOTECHNICAL DATA PROVIDED BY OTHERS

RESISTANCE FACTOR FOR BEARING (CIP WALLS): 0.55
RESISTANCE FACTOR FOR BEARING (MSE WALLS): 0.65
RESISTANCE FACTOR FOR SLIDING: 1.0

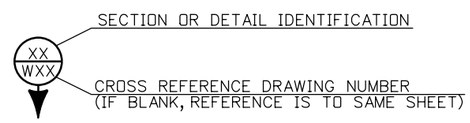

FOR BURIED UTILITY INFORMATION
THREE (3) BUSINESS DAYS BEFORE YOU DIG
CALL 811
(or 1-800-922-1987)
UTILITY NOTIFICATION CENTER OF COLORADO (UNCC)
www.uncc.org

GEOTECHNICAL DATA PROVIDED BY OTHERS

MAJOR STRUCTURE	TYPE	LENGTH	ULTIMATE BEARING CAPACITY psf	ULTIMATE COEFFICIENT OF FRICTION	COHESION psf	SOIL WEIGHT pcf	PASSIVE EARTH PRESSURE pcf	ACTIVE EARTH PRESSURE pcf
WALL-F-16-EI	Cast-In-Place Wall	358'-0"	4000	0.35	300	120	-	75
WALL-F-16-EJ	Cast-In-Place Wall	275'-0"	12000	0.35	300	120	-	60
WALL-F-16-EK	Cast-In-Place Wall	320'-0"	5000	0.35	-	120-125	350	45-60
WALL-F-16-EP	Precast Panel Face M.S.E. Wall	180'-0"	5000	0.35	-	-	-	-
WALL-F-16-EO	Cast-In-Place Wall	116'-4"	6000	0.35	-	125	350	35-50
WALL-F-16-EL	Precast Panel Face M.S.E. Wall	120'-0"	12000	0.35	-	-	-	-
WALL-F-16-EQ	Cast-In-Place Wall	124'-0"	6000	0.35	-	125	350	35-50
WALL-F-16-EH	Precast Panel Face M.S.E. Wall	1754'-4¼"	6000	0.35	-	-	-	-
WALL-F-16-EN	Precast Panel Face M.S.E. Wall	514'-4¼"	12000	0.35	-	-	-	-
WALL-F-16-EM	Precast Panel Face M.S.E. Wall	760'-0"	5000	0.35	-	-	-	-

INDEX OF DRAWINGS

W1 GENERAL NOTES
W2 SUMMARY OF QUANTITIES
W3 RETAINING WALL KEY MAP
W4 ENGINEERING GEOLOGY (1 OF 2)
W5 ENGINEERING GEOLOGY (2 OF 2)

CAST-IN-PLACE WALLS
W6 WALL-F-16-EI PLAN AND ELEVATION (1 OF 2)
W7 WALL-F-16-EI PLAN AND ELEVATION (2 OF 2)
W8 WALL-F-16-EI SECTIONS
W9 WALL-F-16-EJ PLAN AND ELEVATION (1 OF 2)
W10 WALL-F-16-EJ PLAN AND ELEVATION (2 OF 2)
W11 WALL-F-16-EJ SECTIONS
W12 WALL-F-16-EK PLAN AND ELEVATION (1 OF 2)
W13 WALL-F-16-EK PLAN AND ELEVATION (2 OF 2)
W14 WALL-F-16-EK SECTIONS
W15 WALL-F-16-EO PLAN AND ELEVATION
W16 WALL-F-16-EQ PLAN AND ELEVATION
W17 WALL-F-16-EO & WALL-F-16-EQ SECTIONS (1 OF 2)
W18 WALL-F-16-EO & WALL-F-16-EQ SECTIONS (2 OF 2)

TRAIL - MSE PANEL WALLS
W19 WALL-F-16-EL PLAN AND ELEVATION
W20 WALL-F-16-EP PLAN AND ELEVATION
W21 TRAIL - MSE WALL TYPICAL SECTION
W22 TRAIL - MSE WALL REINFORCEMENT

ROADWAY - MSE PANEL WALLS
W23 WALL-F-16-EH PLAN AND ELEVATION (1 OF 8)
W24 WALL-F-16-EH PLAN AND ELEVATION (2 OF 8)
W25 WALL-F-16-EH PLAN AND ELEVATION (3 OF 8)
W26 WALL-F-16-EH PLAN AND ELEVATION (4 OF 8)
W27 WALL-F-16-EH PLAN AND ELEVATION (5 OF 8)
W28 WALL-F-16-EH PLAN AND ELEVATION (6 OF 8)
W29 WALL-F-16-EH PLAN AND ELEVATION (7 OF 8)
W30 WALL-F-16-EH PLAN AND ELEVATION (8 OF 8)
W31 WALL-F-16-EM PLAN AND ELEVATION (1 OF 4)
W32 WALL-F-16-EM PLAN AND ELEVATION (2 OF 4)
W33 WALL-F-16-EM PLAN AND ELEVATION (3 OF 4)
W34 WALL-F-16-EM PLAN AND ELEVATION (4 OF 4)
W35 WALL-F-16-EN PLAN AND ELEVATION (1 OF 3)
W36 WALL-F-16-EN PLAN AND ELEVATION (2 OF 3)
W37 WALL-F-16-EN PLAN AND ELEVATION (3 OF 3)
W38 ROADWAY - MSE WALL SECTION DETAILS (1 OF 3)
W39 ROADWAY - MSE WALL SECTION DETAILS (2 OF 3)
W40 ROADWAY - MSE WALL SECTION DETAILS (3 OF 3)
W41 ROADWAY - MSE WALL REINFORCEMENT
W42 ROADWAY - MSE WALL TYPE 1 INLET DETAILS
W43 ROADWAY - MSE WALL TYPE 2 INLET DETAILS
W44 ROADWAY - MSE WALL TYPE 3 INLET DETAILS

COMMON DETAILS
W45 CIP WALL DETAILS
W46 CIP ARCHITECTURE DETAILS
W47 CIP WALL MECHANICALLY STABALIZED BACKFILL
W48 MSE WALL DETAILS
W49 MSE WALL PANEL DETAILS
W50 MSE WALL ARCHITECTURE
PRECAST CONC. PANELS DETAILS (1 OF 2)
W51 MSE WALL ARCHITECTURE
PRECAST CONC. PANELS DETAILS (2 OF 2)
W52 PIPE RAILING DETAILS (1 OF 2)
W53 PIPE RAILING DETAILS (2 OF 2)
W54 BRIDGE RAIL TYPE 7 (SPECIAL) (1 OF 3)
W55 BRIDGE RAIL TYPE 7 (SPECIAL) (2 OF 3)
W56 BRIDGE RAIL TYPE 7 (SPECIAL) (3 OF 3)
W57 MSE WALL TOP OF WALL ELEVATIONS (1 OF 3)
W58 MSE WALL TOP OF WALL ELEVATIONS (2 OF 3)
W59 MSE WALL TOP OF WALL ELEVATIONS (3 OF 3)

Quantities	INITIAL	DATE
Quantities By	AML	01/10
Checked By	TWM	01/10

Detail	INITIAL	DATE
Detailed By	DRA	01/10
Checked By	DSO	01/10

Design	INITIAL	DATE
Designed By	JAR	01/10
Checked By	DSO	01/10

Print Date: 1/19/2010
File Name: 14679_Wall_General_Notes_01.dgn
Horiz. Scale: 1:1 Vert. Scale: As Noted
Unit Information 0224 Unit Leader Initials MH

WILSON & COMPANY Engineers & Architects
999 18TH STREET, SUITE 2600
DENVER, CO 80202
PHONE: 303-297-2976
FAX: 303-297-2693

Sheet Revisions

Date:	Comments	Init.

Colorado Department of Transportation
8833 South Wadsworth Court
Littleton, CO 80128
Phone: 303-972-9112 FAX: 303-972-9114
Region 6 RLB

As Constructed
No Revisions:
Revised:
Void:

GENERAL NOTES

Designer: J. Roberts
Detailer: D. Anderson
Sheet Subset: WALL
Structure Numbers
Subset Sheets: W1 of W59

Project No./Code
ES6 0852-103
17679
Sheet Number 131

SUMMARY OF QUANTITIES

ITEM NO.	DESCRIPTION	UNITS	WALL F-16-EI	WALL F-16-EJ	WALL F-16-EK	WALL F-16-EP	WALL F-16-EO	WALL F-16-EL	WALL F-16-EQ	WALL F-16-EH	WALL F-16-EN	WALL F-16-EM	TOTAL
202-00026	REMOVAL OF SLOPE AND DITCH PAVING	SY	157	-	-	-	-	-	-	-	-	-	157
202-00155	REMOVAL OF WALL	LF	-	-	-	-	66	-	75	-	-	-	141
206-00000	STRUCTURE EXCAVATION	CY	513	274	1351	184	324	-	404	743	476	2000	6269
206-00100	STRUCTURE BACKFILL (CLASS 1)	CY	229	82	1048	973	497	637	660	19309	2919	10133	36487
206-00360	MECHANICAL REINFORCEMENT OF SOIL	CY	-	-	-	526	212	344	279	16107	1695	5964	25127
206-01781	SHORING (AREA 1)	LS	1	-	-	-	-	-	-	-	-	-	1
206-01782	SHORING (AREA 2)	LS	-	-	1	-	-	-	-	-	-	-	1
504-04420	PRECAST PANEL FACING	SF	-	-	-	1446	-	933	-	28495	4847	10710	46431
507-00100	CONCRETE SLOPE AND DITCH PAVING (REINFORCED)	CY	7	-	-	-	-	-	-	-	-	-	7
514-00000	PIPE RAILING	LF	362	-	-	200	-	140	-	-	-	-	702
601-01050	CONCRETE CLASS B (WALL)	CY	-	-	-	14	-	7	-	103	31	46	201
601-03050	CONCRETE CLASS D (WALL)	CY	251	145	303	65	118	44	145	573	151	222	2017
601-40400	STRUCTURAL CONCRETE STAIN	SY	358	186	467	164	205	110	243	5434	1164	2061	10392
602-00000	REINFORCING STEEL	LB	44086	18750	45826	4607	27342	3161	36787	852	975	2158	184544
602-00020	REINFORCING STEEL (EPOXY COATED)	LB	-	-	-	-	-	-	-	86228	22246	30973	139447
606-10705	BRIDGE RAIL TYPE 7 (SPECIAL)	LF	-	-	-	-	-	-	-	1694	431	599	2724
609-20010	CURB TYPE 2 (SECTION B)	LF	352	-	-	-	-	-	-	-	-	-	352
613-00150	1-1/2 INCH ELECTRICAL CONDUIT	LF	-	-	-	-	-	-	-	3388	862	1198	5448

Design			Detail			Quantities		
	INITIAL	DATE		INITIAL	DATE		INITIAL	DATE
Designed By	JAR	01/10	Detailed By	DRA	01/10	Quantities By	AML	01/10
Checked By	DSO	01/10	Checked By	DSO	01/10	Checked By	TWM	01/10

Print Date: 1/19/2010
File Name: 14679_Wall_General_Notes_02.dgn
Horiz. Scale: 1:1 Vert. Scale: As Noted
Unit Information 0224 Unit Leader Initials MH

WILSON & COMPANY Engineers & Architects
999 18TH STREET, SUITE 2600
DENVER, CO 80202
PHONE: 303-297-2976
FAX: 303-297-2693

Sheet Revisions

Date:	Comments	Init.

Colorado Department of Transportation
DOT DEPARTMENT OF TRANSPORTATION
8833 South Wadsworth Court
Littleton, CO 80128
Phone: 303-972-9112 FAX: 303-972-9114
Region 6 RLB

As Constructed
No Revisions:
Revised:
Void:

SUMMARY OF QUANTITIES

Designer: J. Roberts
Detailer: D. Anderson
Sheet Subset: WALL
Structure Numbers
Subset Sheets: W2 of W59

Project No./Code
ES6 0852-103
17679
Sheet Number 132

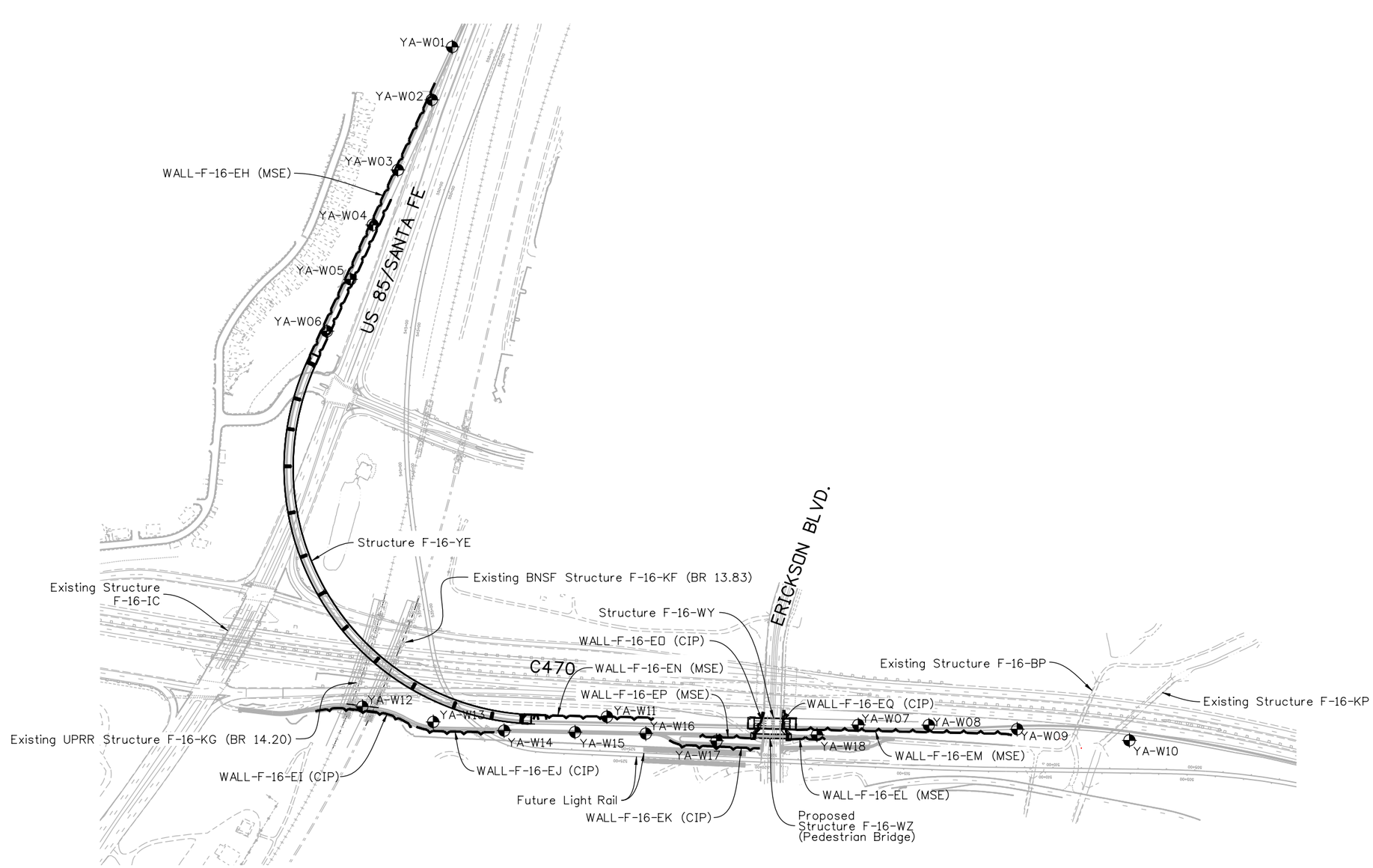

RETAINING WALL KEY PLAN

Design	INITIAL	DATE	Detail	INITIAL	DATE	Quantities	INITIAL	DATE
Designed By	JAR	01/10	Detailed By	DRA	01/10	Quantities By	AML	01/10
Checked By	DSO	01/10	Checked By	DSO	01/10	Checked By	TWM	01/10

Print Date: 1/19/2010
File Name: 14679_KeySheet_02.dgn
Horiz. Scale: N/A Vert. Scale: N/A
Unit Information 0224 Unit Leader Initials MH

WILSON & COMPANY Engineers & Architects
999 18TH STREET, SUITE 2600
DENVER, CO 80202
PHONE: 303-297-2976
FAX: 303-297-2693

R-X

Sheet Revisions		
Date:	Comments	Init.

Colorado Department of Transportation
DOT DEPARTMENT OF TRANSPORTATION
8833 South Wadsworth Court
Littleton, CO 80128
Phone: 303-972-9112 FAX: 303-972-9114
Region 6 RLB

As Constructed
No Revisions:
Revised:
Void:

RETAINING WALL KEY PLAN

Designer: J. Roberts
Detailer: R. Artman
Sheet Subset: WALL
Structure Numbers
Subset Sheets: W3 of W59

Project No./Code
ES6 0852-103
17679
Sheet Number 133

14679_KeySheet_02.dgn 1/19/2010 11:31:04 AM

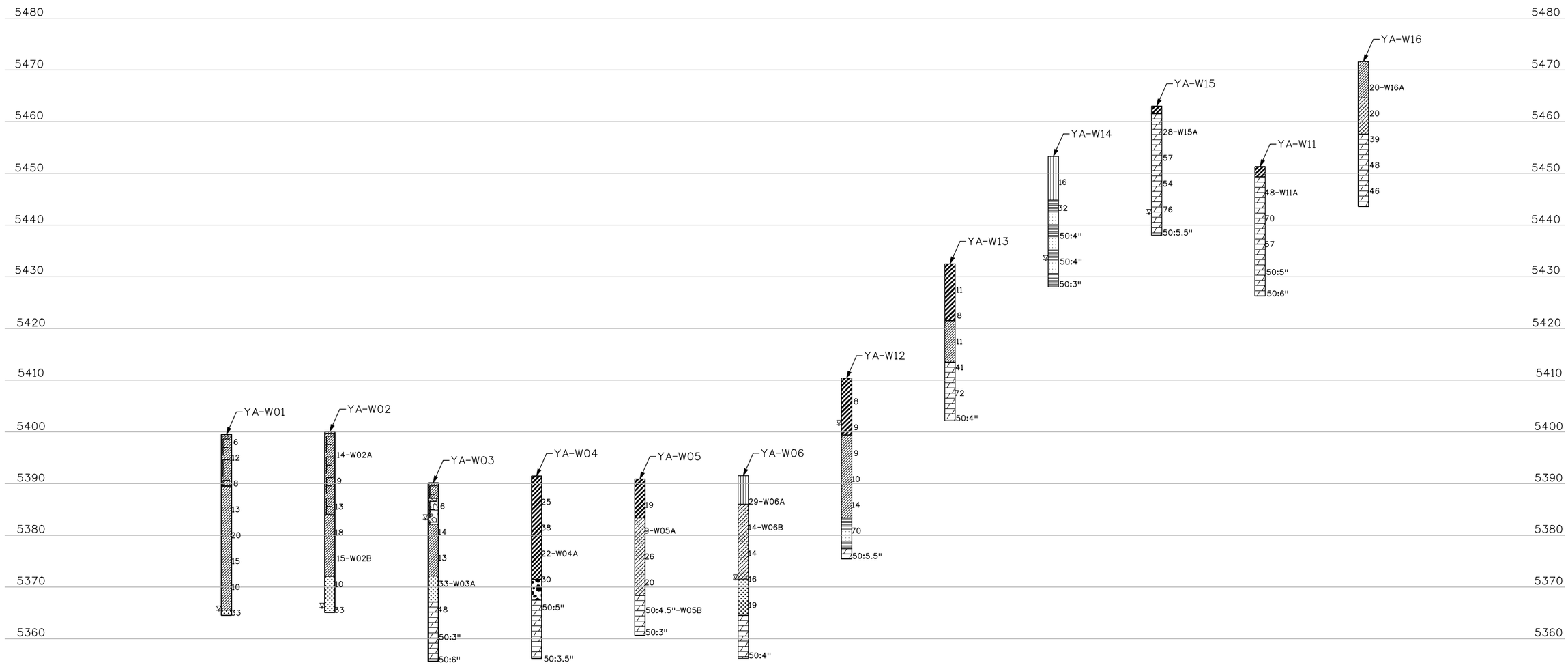

SUMMARY OF TEST RESULTS

Sample No.	Depth	Classification: Corps of Engrs. or Visual	Classification: AASHTO	Grading Analysis (AASHTO) Percent: Gravel	Coarse Sand	Fine Sand	Silt and Clay	Atterberg Limits: Liquid Limit W	Plastic Limit Wp	Plastic Limit Ww	Water Content %	Dry Unit Weight γ P.C.F.
REFER TO GEOTECH REPORT												

TYPE OF MATERIAL

- Topsoil
- Low Plasticity Clay
- Fill with Gravel as major soil
- Well-graded Gravel
- Fill with Clay as major soil
- Well-graded Sand
- High Plasticity Clay
- Clayey Sand
- Silt
- Claystone
- Alternating layers of sandstone and claystone

Note: Boulders may be encountered at any depth

LEGEND

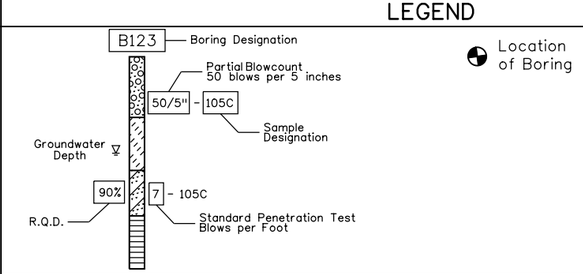

Print Date: 1/19/2010
File Name: 29-023 Eng Geo01.dgn
Horiz. Scale: 1:1 Vert. Scale: As Noted

Yeh and Associates, Inc.
Consulting Engineers & Scientists

Sheet Revisions		
Date:	Comments	Init.

Colorado Department of Transportation
DOT DEPARTMENT OF TRANSPORTATION
8833 South Wadsworth Court
Littleton, CO 80128
Phone: 303-972-9112 FAX: 303-972-9114
Region 6 RLB

As Constructed
No Revisions:
Revised:
Void:

ENGINEERING GEOLOGY
Designer: T. Schlittenhart
Detailer: M. Walz
Sheet Subset: WALL
Structure Numbers
Subset Sheets: W4 of W59

Project No./Code
ES6 0852-103
17679
Sheet Number 134

Quantities	INITIAL	DATE
Quantities By		
Checked By		

Detail	INITIAL	DATE
Detailed By	MJW	12/09
Checked By	TWS	12/09

Design	INITIAL	DATE
Designed By	TWS	12/09
Checked By	TWS	12/09

DAnderson 2:42:13 PM M:\TRN\07-100-311-112\14679\Bridge\Drawings\Walls\29-023 Eng Geo01.dgn

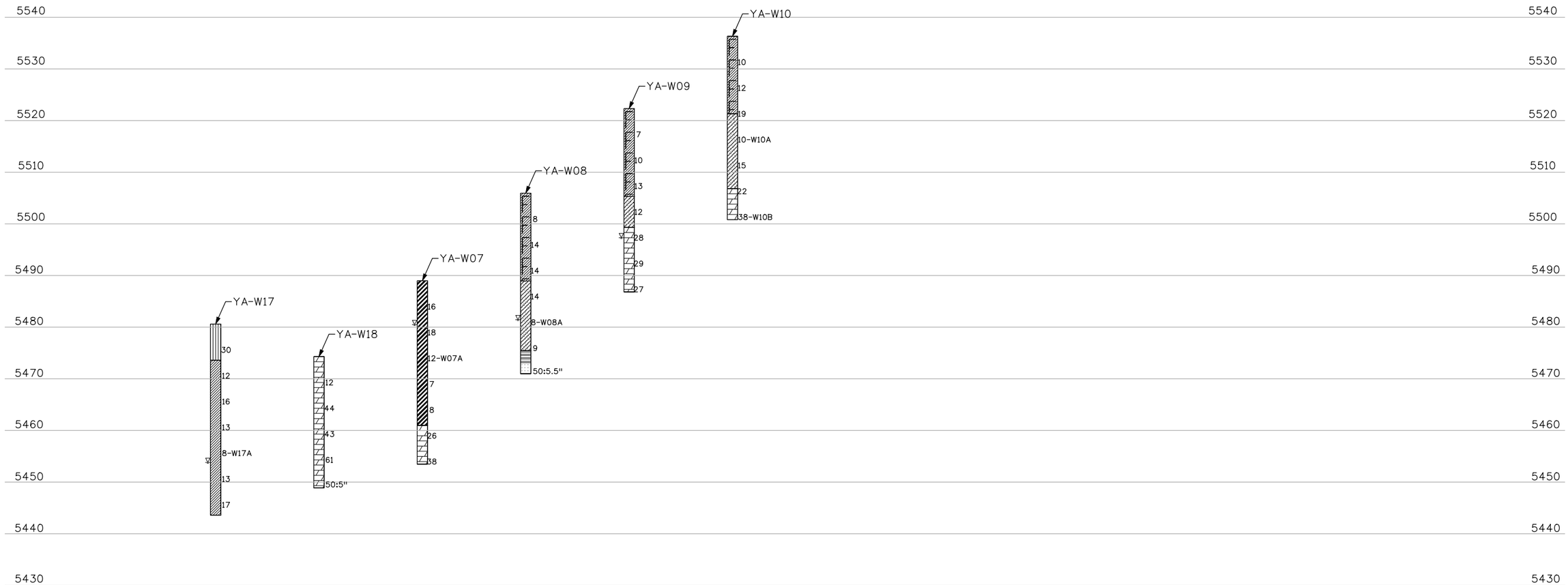

SUMMARY OF TEST RESULTS

Sample No.	Depth	Classification: Corps of Engrs. or Visual	Classification: AASHTO	Grading Analysis (AASHTO) Percent: Gravel	Coarse Sand	Fine Sand	Silt and Clay	Atterberg Limits: Liquid Limit LL	Plastic Limit PL	Plastic Limit PI	Water Content W %	Dry Unit Weight γd P.C.F.
REFER TO GEOTECH REPORT												

TYPE OF MATERIAL

- Topsoil
- Low Plasticity Clay
- Fill with Gravel as major soil
- Well-graded Gravel
- Fill with Clay as major soil
- Well-graded Sand
- High Plasticity Clay
- Clayey Sand
- Silt
- Claystone
- Alternating layers of sandstone and claystone

Note: Boulders may be encountered at any depth

LEGEND

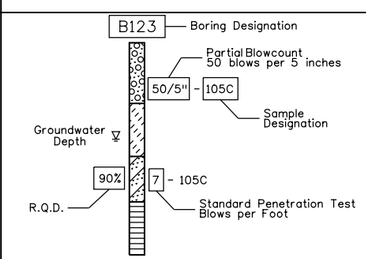

Location of Boring

Print Date: 1/19/2010
File Name: 29-023 Eng Geo02.dgn
Horiz. Scale: 1:1 Vert. Scale: As Noted

Yeh and Associates, Inc.
Consulting Engineers & Scientists

Sheet Revisions		
Date:	Comments	Init.

Colorado Department of Transportation
8833 South Wadsworth Court
Littleton, CO 80128
Phone: 303-972-9112 FAX: 303-972-9114
Region 6 RLB

As Constructed
No Revisions:
Revised:
Void:

ENGINEERING GEOLOGY
Designer: T. Schlittenhart
Detailer: M. Walz
Sheet Subset: WALL
Structure Numbers
Subset Sheets: W5 of W59

Project No./Code
ES6 0852-103
17679
Sheet Number 135

Design	INITIAL	DATE	Detail	INITIAL	DATE	Quantities	INITIAL	DATE
Designed By	TMS	12/09	Detailed By	MJW	12/09	Quantities By		
Checked By	TMS	12/09	Checked By	TMS	12/09	Checked By		

DAnderson 2:43:10 PM M:\TRN\07-100-311-12\14679\Bridge\Drawings\Walls\29-023 Eng Geo02.dgn

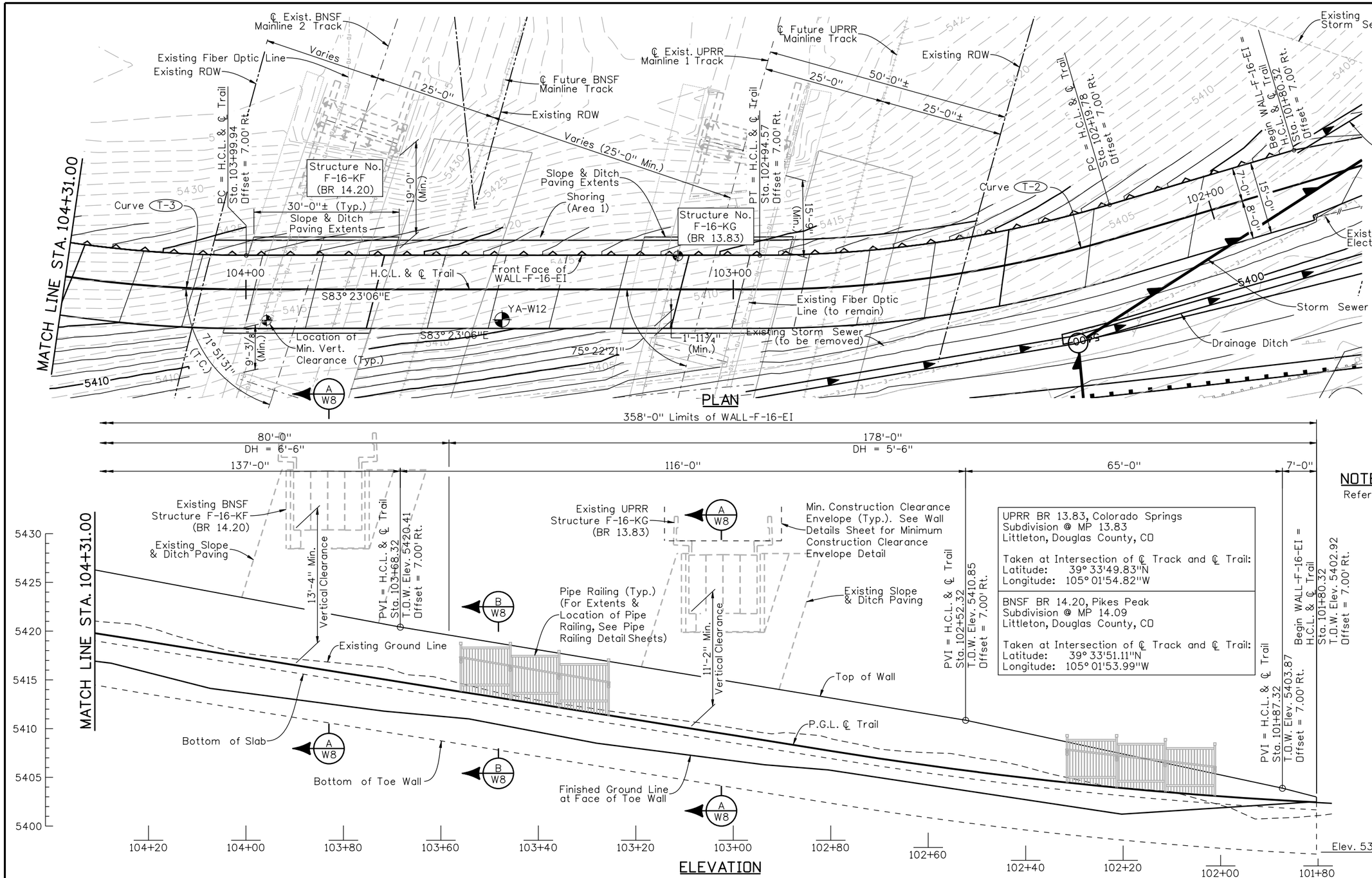

UPRR BR 13.83, Colorado Springs
Subdivision @ MP 13.83
Littleton, Douglas County, CO

Taken at Intersection of ℄ Track and ℄ Trail:
Latitude: 39° 33'49.83"N
Longitude: 105° 01'54.82"W

BNSF BR 14.20, Pikes Peak
Subdivision @ MP 14.09
Littleton, Douglas County, CO

Taken at Intersection of ℄ Track and ℄ Trail:
Latitude: 39° 33'51.11"N
Longitude: 105° 01'53.99"W

℄ TRAIL CURVE DATA

Curve T-2
Δ = 16° 28'50" Rt.
D = 22° 02'13"
T = 37.65'
L = 74.79'
R = 260.00'

Curve T-3
Δ = 23° 22'09" Rt.
D = 22° 02'13"
T = 53.77'
L = 106.05'
R = 260.00'

NOTE:

Refer to sheet W7 for notes.

Design			Detail			Quantities		
	INITIAL	DATE		INITIAL	DATE		INITIAL	DATE
Designed By	JAR	01/10	Detailed By	RGA	01/10	Quantities By	MJN	01/10
Checked By	TWM	01/10	Checked By	TWM	01/10	Checked By	TWM	01/10

D Anderson 11:35:28 AM M:\TRN\07-100-311-12\14679\Bridge\Drawings\Walls\Wall F-16-EI\14679EI_CIPWallLay_01.dgn

Print Date: 1/19/2010
File Name: 14679EI_CIPWallLay_01.dgn
Horiz. Scale: 20 Vert. Scale: 10
Unit Information 0224 Unit Leader Initials MH

WILSON & COMPANY Engineers & Architects
999 18TH STREET, SUITE 2600
DENVER, CO 80202
PHONE: 303-297-2976
FAX: 303-297-2693

Sheet Revisions		
Date:	Comments	Init.

Colorado Department of Transportation
DOT DEPARTMENT OF TRANSPORTATION
8833 South Wadsworth Court
Littleton, CO 80128
Phone: 303-972-9112 FAX: 303-972-9114
Region 6 RLB

As Constructed
No Revisions:
Revised:
Void:

WALL-F-16-EI
PLAN AND ELEVATION (1 OF 2)

Designer:	J. Roberts	Structure Numbers	WALL-F-16-EI
Detailer:	R. Artman		
Sheet Subset:	WALL	Subset Sheets:	W6 of W59

Project No./Code
ES6 0852-103
17679
Sheet Number 136

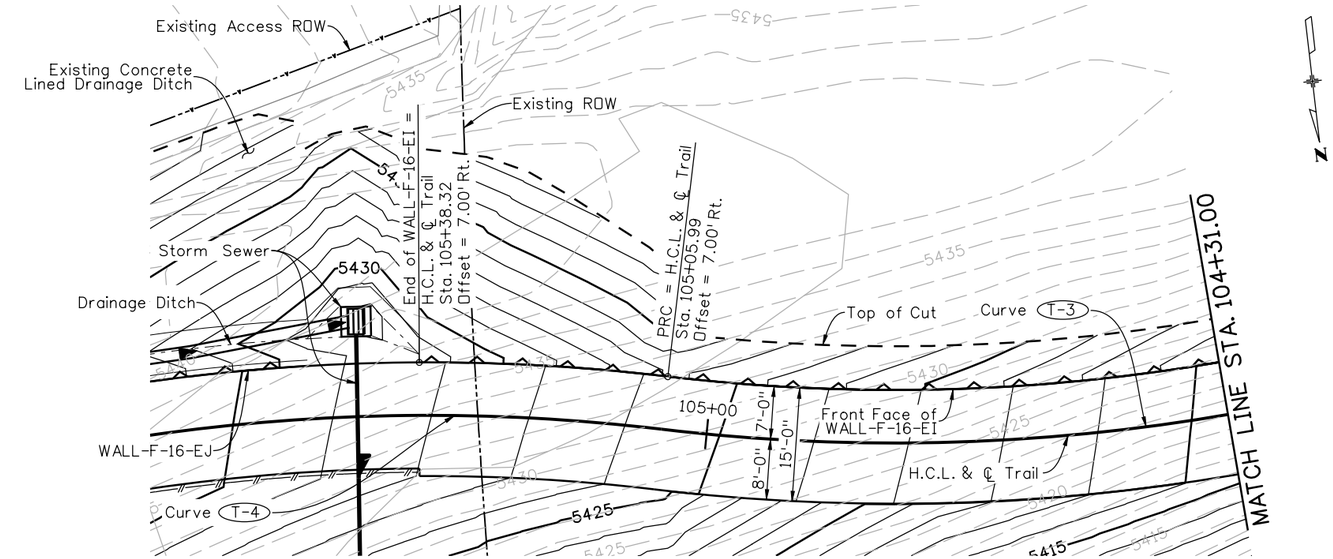

PLAN

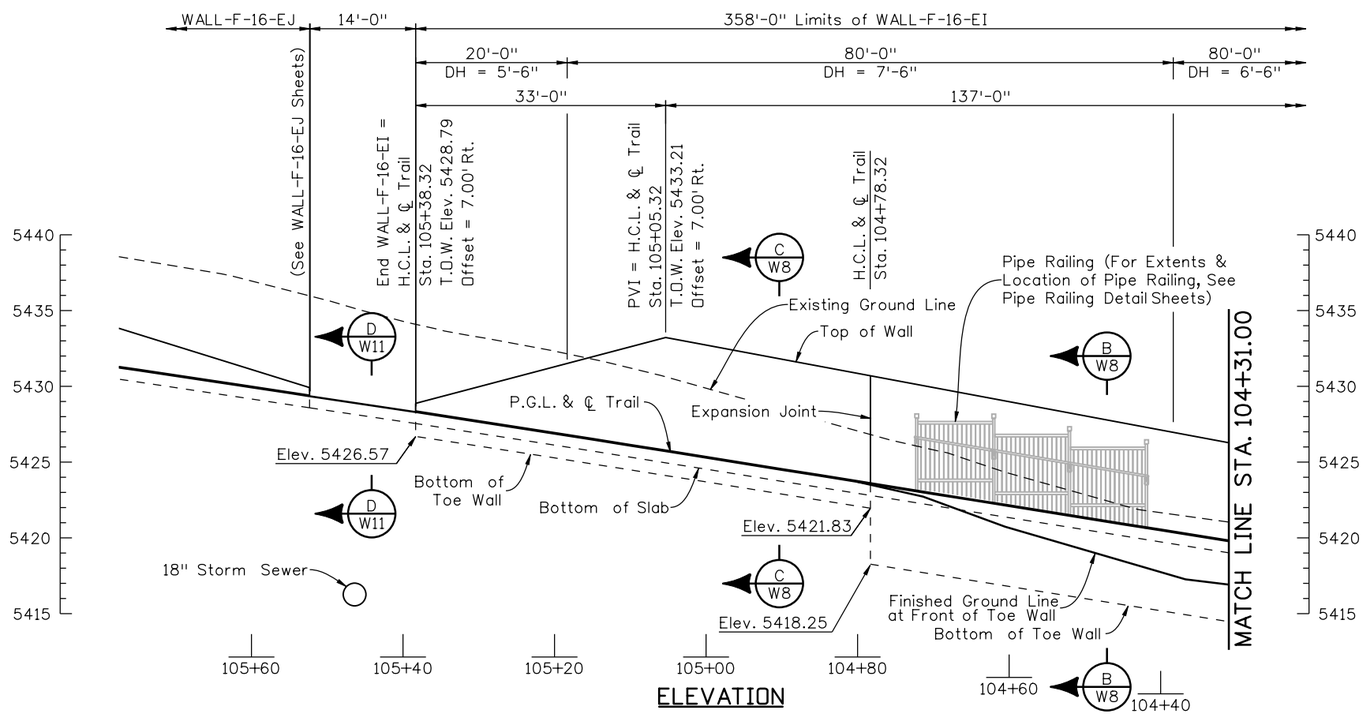

ELEVATION

℄ TRAIL CURVE DATA

Curve T-3
Δ = 23° 22'09" Rt.
D = 22° 02'13"
T = 53.77'
L = 106.05'
R = 260.00'

Curve T-4
Δ = 28° 46'37" Lt.
D = 22° 02'13"
T = 66.70'
L = 130.59'
R = 260.00'

NOTES:

1. All horizontal dimensions are measured along H.C.L. & ℄ Trail.
2. See Roadway Plans for location of combination wire fence.
3. For removal of existing slope and ditch paving, see WALL-F-16-EI Sections sheet.
4. For expansion joint and weakened plane details, see CIP Wall Details sheet.
5. For architectural details, see Wall Architecture Details sheet.
6. For trail slab elevations, see Trail Typical Sections and Profile sheets.
7. For concrete lined ditch details, see Drainage Plans.

Design			Detail			Quantities		
	INITIAL	DATE		INITIAL	DATE		INITIAL	DATE
Designed By	JAR	01/10	Detailed By	RGA	01/10	Quantities By	MJN	01/10
Checked By	TWM	01/10	Checked By	TWM	01/10	Checked By	TWM	01/10

D:Anderson 11:36:19 AM M:\TRN\07-100-311-12\14679\Bridge\Drawings\Walls\Wall F-16-EI\14679EI_CIPWallLay_02.dgn

Print Date: 1/19/2010
File Name: 14679EI_CIPWallLay_02.dgn
Horiz. Scale: 20 Vert. Scale: 10
Unit Information 0224 Unit Leader Initials MH

WILSON & COMPANY Engineers & Architects
999 18TH STREET, SUITE 2600
DENVER, CO 80202
PHONE: 303-297-2976
FAX: 303-297-2693

Sheet Revisions		
Date:	Comments	Init.

Colorado Department of Transportation
DOT DEPARTMENT OF TRANSPORTATION
8833 South Wadsworth Court
Littleton, CO 80128
Phone: 303-972-9112 FAX: 303-972-9114
Region 6 RLB

As Constructed
No Revisions:
Revised:
Void:

WALL-F-16-EI
PLAN AND ELEVATION (2 OF 2)

Designer: J. Roberts
Detailer: R. Artman
Sheet Subset: WALL
Structure Numbers: WALL-F-16-EI
Subset Sheets: W7 of W59

Project No./Code
ES6 0852-103
17679
Sheet Number 137

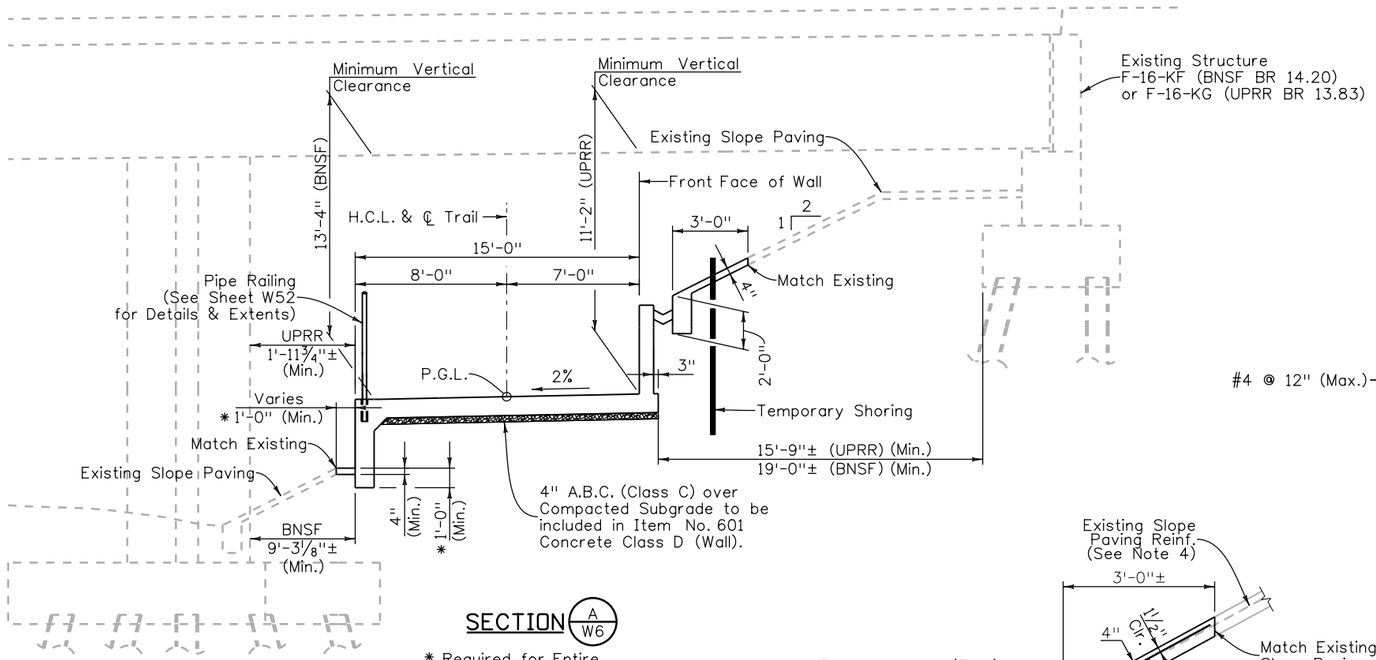

SECTION A W6

* Required for Entire Length of WALL-F-16-EI

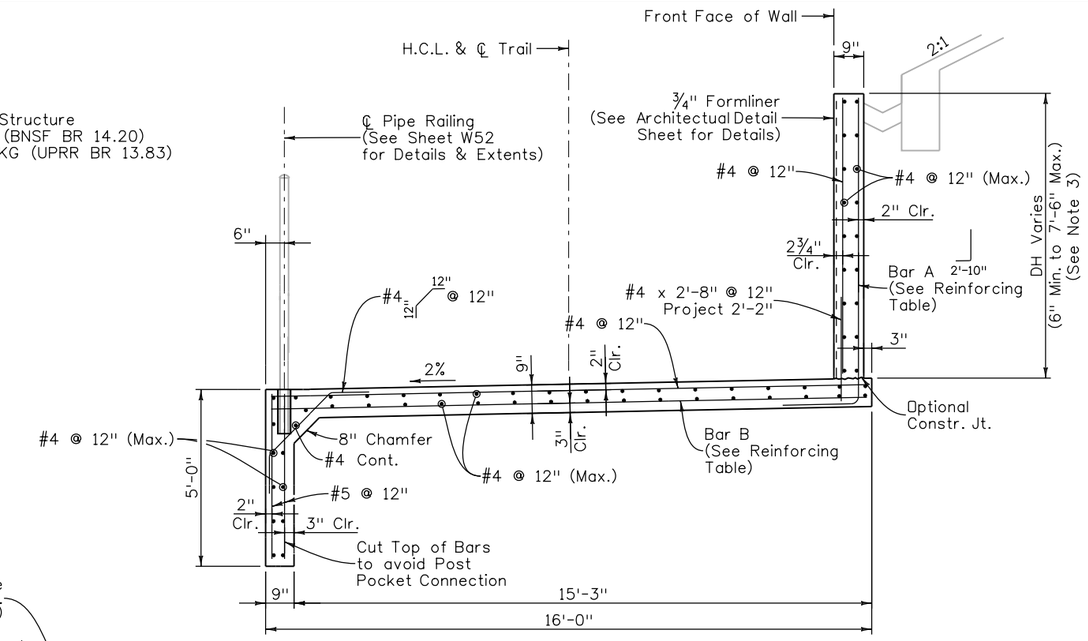

SECTION B W7

(See Section A for Dim. not Shown)

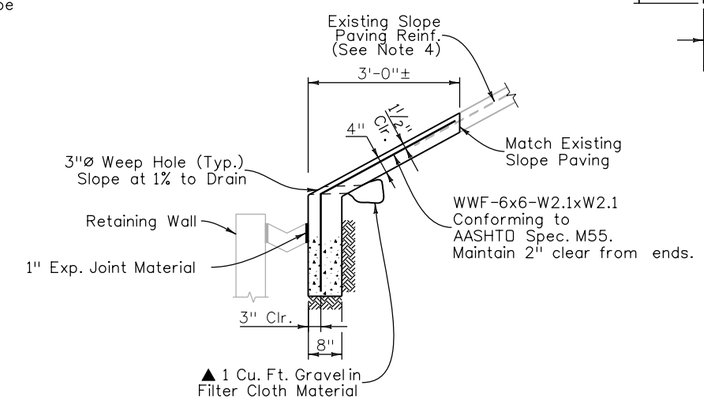

TYPICAL SECTION THRU SLOPE PAVING

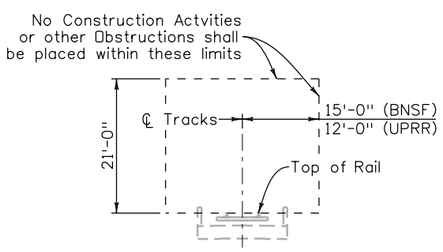

MINIMUM CONSTRUCTION CLEARANCE ENVELOPE DETAIL

REINFORCING TABLE		
DH	Bar A	Bar B
7'-6"	#6 @ 5"	#6 @ 5"
6'-6"	#6 @ 6"	#6 @ 6"
5'-6"	#6 @ 10"	#6 @ 10"

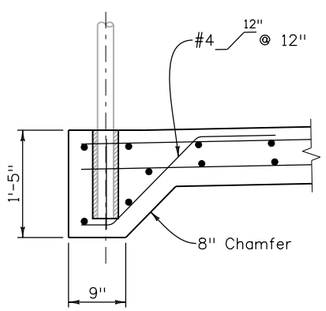

PARTIAL SECTION C W7

Toewall from Sta. 104+78.32 to Sta. 105+38.32

NOTES:

1. See Profile Sheets for slab elevations.
2. See sheet W45 for wall offset, weakened plane, expansion joint, contraction joint, and drainage details.
3. For DH less than 1'-0", bar A is not required. Use #4@12" centered in wall. Embed 6".
4. Lap existing slope paving reinforcing a minimum of 8".
5. Concrete shall be Concrete Class D (Wall).

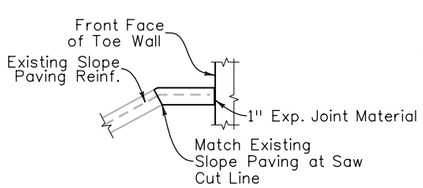

TYPICAL SECTION THRU SLOPE PAVING

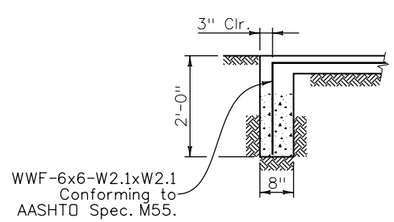

TYPICAL SECTION THRU CUT-OFF WALL

(Normal to Slope, Ea. Side)

Design				Detail				Quantities		
	INITIAL	DATE		INITIAL	DATE			INITIAL	DATE
Designed By	JAR	01/10	Detailed By	DRA	01/10	Quantities By		MJN	01/10
Checked By	DSO	01/10	Checked By	DSO	01/10	Checked By		TWM	01/10

DAnderson 11:36:54 AM M:\TRN\07-100-311-12\14679\Bridge\Drawings\Walls\Wall F-16-EI\14679EI_Details_01.dgn

Print Date: 1/19/2010	Sheet Revisions		
File Name: 14679EI_Details_01.dgn	Date:	Comments	Init.
Horiz. Scale: 1:1 Vert. Scale: As Noted			
Unit Information 0224 Unit Leader Initials MH			

WILSON & COMPANY Engineers & Architects 999 18TH STREET, SUITE 2600 DENVER, CO 80202 PHONE: 303-297-2976 FAX: 303-297-2993

Colorado Department of Transportation
8833 South Wadsworth Court
Littleton, CO 80128
Phone: 303-972-9112 FAX: 303-972-9114
Region 6 RLB

As Constructed			
No Revisions:	WALL-F-16-EI SECTIONS		
Revised:	Designer: J. Roberts	Structure Numbers	WALL-F-16-EI
Void:	Detailer: D. Anderson		
	Sheet Subset: WALL	Subset Sheets: W8 of W59	

Project No./Code
ES6 0852-103
17679
Sheet Number 138

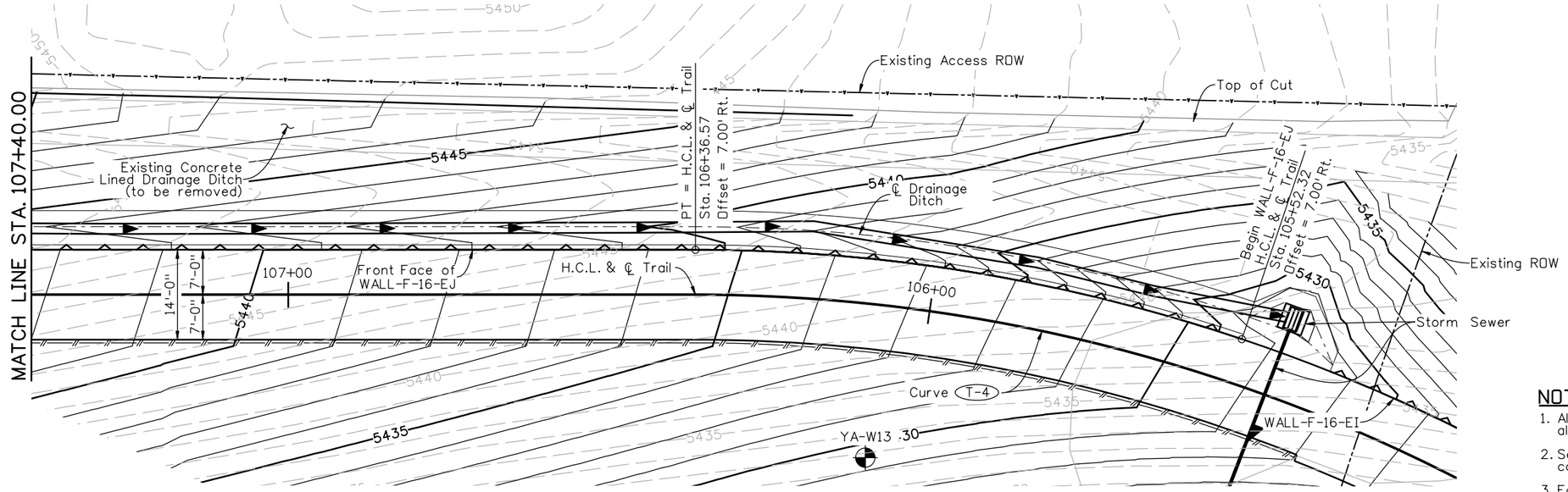

PLAN

℄ TRAIL CURVE DATA

Curve T-4
Δ = 28° 46'37" Lt.
D = 22° 02'13"
T = 66.70'
L = 130.59'
R = 260.00'

NOTES:

1. All horizontal dimensions are measured along H.C.L. & ℄ Trail.
2. See Roadway Plans for location of combination wire fence.
3. For expansion joint and weakened plane details, see CIP Wall Details sheet.
4. For architectural details, see CIP Architecture Details sheet.
5. For ℄ Trail slab elevations, see Typical Sections and Profile sheets of Trail.
6. See Roadway Plans for location of combination wire fence.
7. For concrete lined ditch details, see Drainage Plans.

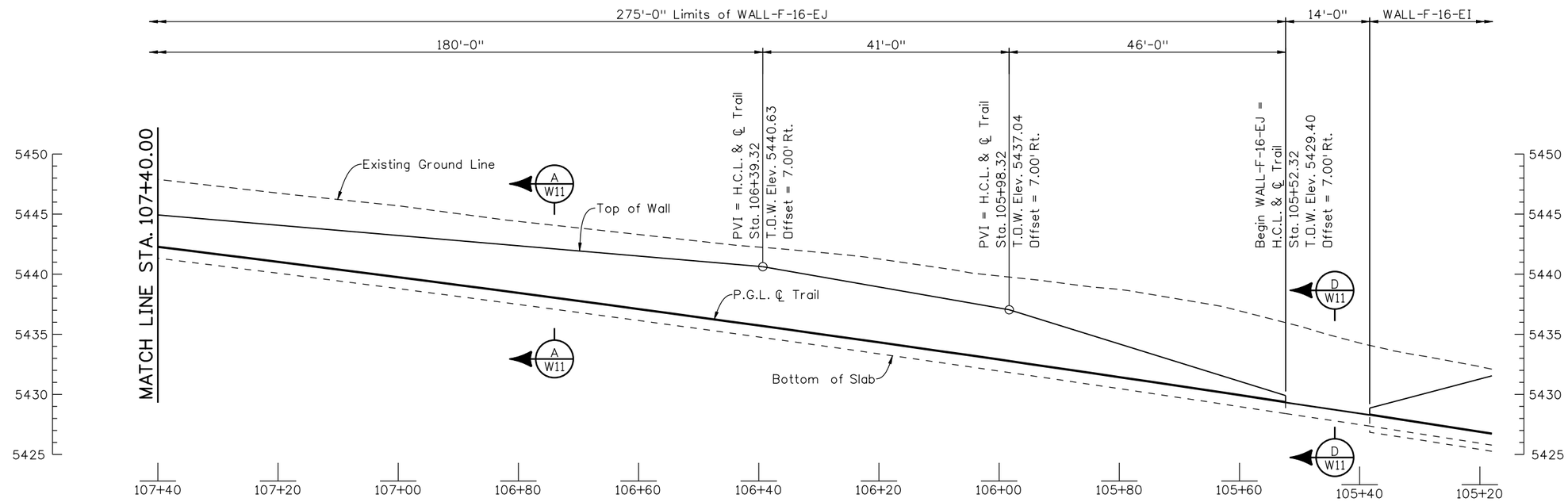

ELEVATION

Design			Detail			Quantities		
	INITIAL	DATE		INITIAL	DATE		INITIAL	DATE
Designed By	JAR	01/10	Detailed By	RGA	01/10	Quantities By	MJN	01/10
Checked By	TWM	01/10	Checked By	TWM	01/10	Checked By	TWM	01/10

Print Date: 1/19/2010
File Name: 14679EJ_CIPWallLay_01.dgn
Horiz. Scale: 20 Vert. Scale: 10
Unit Information 0224 Unit Leader Initials MH

WILSON & COMPANY Engineers & Architects
999 18TH STREET, SUITE 2600
DENVER, CO 80202
PHONE: 303-297-2976
FAX: 303-297-2693

Sheet Revisions		
Date:	Comments	Init.

Colorado Department of Transportation
DOT DEPARTMENT OF TRANSPORTATION
8833 South Wadsworth Court
Littleton, CO 80128
Phone: 303-972-9112 FAX: 303-972-9114
Region 6 RLB

As Constructed
No Revisions:
Revised:
Void:

WALL-F-16-EJ
PLAN AND ELEVATION (1 OF 2)

Designer: J. Roberts
Detailer: R. Artman
Sheet Subset: WALL
Structure Numbers: WALL-F-16-EJ
Subset Sheets: W9 of W59

Project No./Code
ES6 0852-103
17679
Sheet Number 139

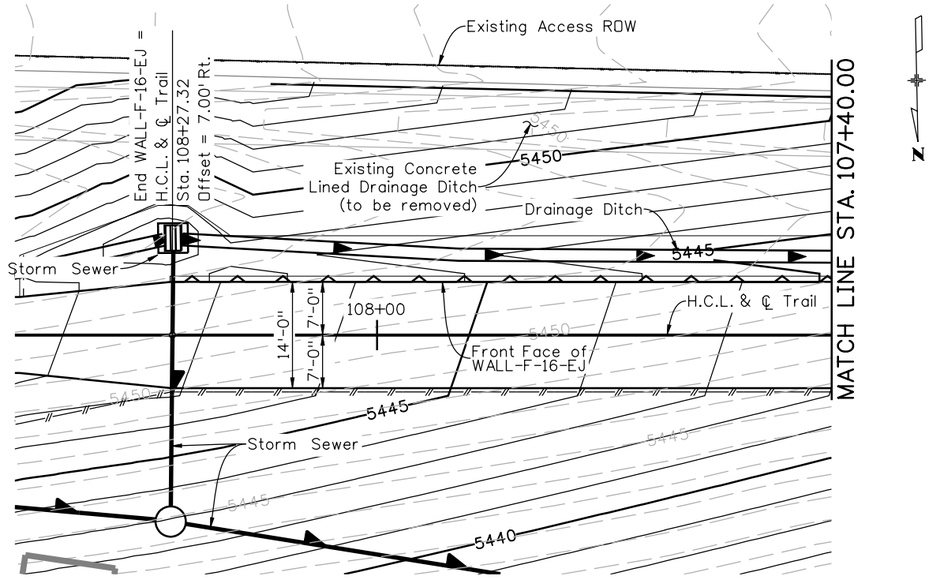

PLAN

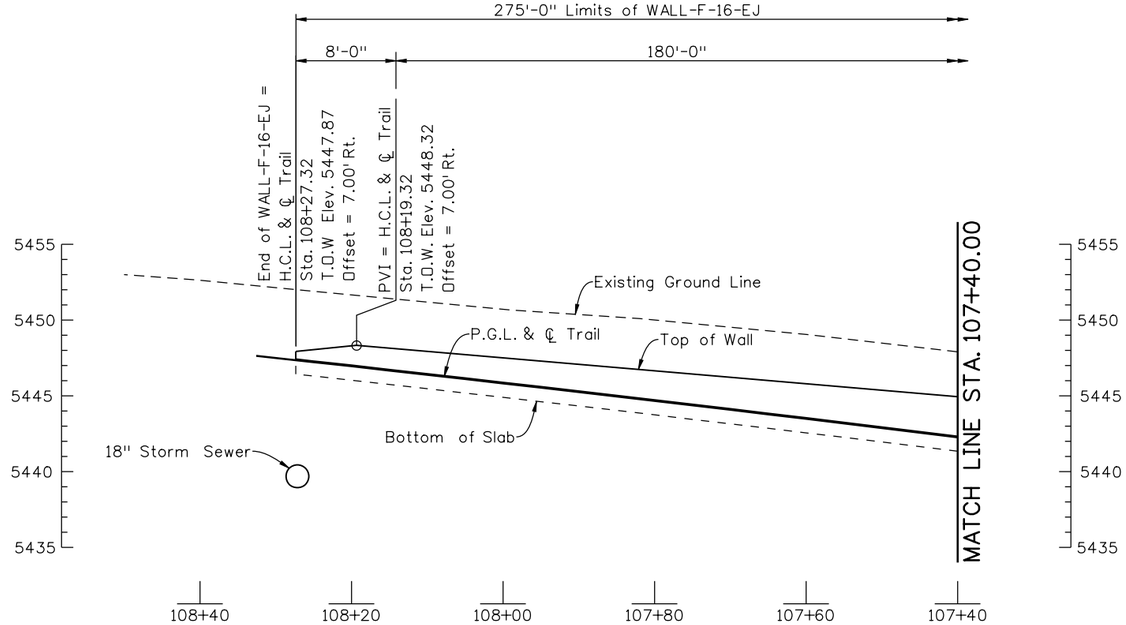

ELEVATION

NOTE:

1. Refer to Sheet W9 for notes.

Design			Detail			Quantities		
	INITIAL	DATE		INITIAL	DATE		INITIAL	DATE
Designed By	JAR	01/10	Detailed By	RGA	01/10	Quantities By	MJN	01/10
Checked By	TWM	01/10	Checked By	TWM	01/10	Checked By	TWM	01/10

D:Anderson 11:38:41 AM M:\TRN\07-100-311-12\14679\Bridge\Drawings\Walls\WallF-16-EJ\14679EJ_CIPWallLay_02.dgn

Print Date: 1/19/2010
File Name: 14679EJ_CIPWallLay_02.dgn
Horiz. Scale: 20 Vert. Scale: 10
Unit Information 0224 Unit Leader Initials MH

WILSON & COMPANY Engineers & Architects
999 18TH STREET, SUITE 2600
DENVER, CO 80202
PHONE: 303-297-2976
FAX: 303-297-2693

Sheet Revisions		
Date:	Comments	Init.

Colorado Department of Transportation
DOT DEPARTMENT OF TRANSPORTATION
8833 South Wadsworth Court
Littleton, CO 80128
Phone: 303-972-9112 FAX: 303-972-9114
Region 6 RLB

As Constructed
No Revisions:
Revised:
Void:

WALL-F-16-EJ
PLAN AND ELEVATION (2 OF 2)

Designer:	J. Roberts	Structure Numbers	WALL-F-16-EJ
Detailer:	R. Artman		
Sheet Subset:	WALL	Subset Sheets: W10 of W59	

Project No./Code
ES6 0852-103
17679
Sheet Number 140

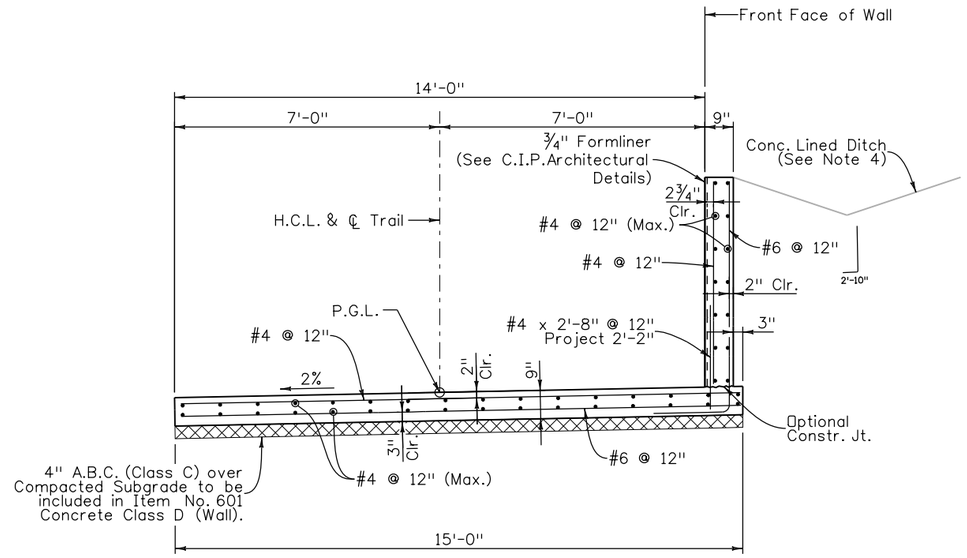

SECTION A/W9

NOTES:

1. See Profile Sheets for slab elevations.
2. See sheet W45 for wall offset, weakened plane, expansion joint, contraction joint, and drainage details.
3. Concrete shall be Concrete Class D (Wall).
4. For concrete lined ditch, see Drainage Plans.

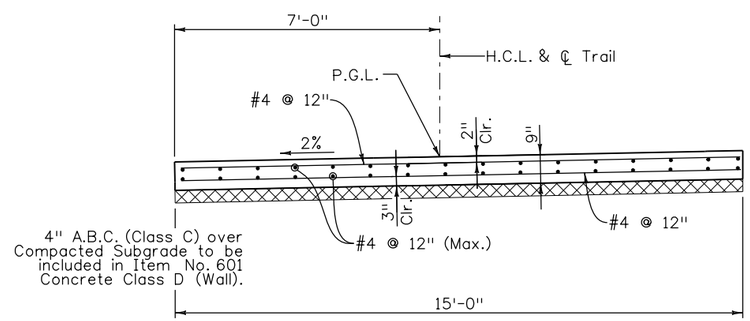

SECTION D/W9

Design			Detail			Quantities		
	INITIAL	DATE		INITIAL	DATE		INITIAL	DATE
Designed By	JAR	01/10	Detailed By	DRA	01/10	Quantities By	MJN	01/10
Checked By	DSO	01/10	Checked By	DSO	01/10	Checked By	TWM	01/10

DAnderson 11:39:19 AM M:\TRN\07-100-311-12\14679\Bridge\Drawings\Walls\Wall F-16-EJ\14679EJ_Details_01.dgn

Print Date: 1/19/2010
File Name: 14679EJ_Details_01.dgn
Horiz. Scale: 1:1 Vert. Scale: As Noted
Unit Information 0224 Unit Leader Initials MH

WILSON & COMPANY Engineers & Architects
999 18TH STREET, SUITE 2600
DENVER, CO 80202
PHONE: 303-297-2976
FAX: 303-297-2693

Sheet Revisions		
Date:	Comments	Init.

Colorado Department of Transportation
DOT DEPARTMENT OF TRANSPORTATION
8833 South Wadsworth Court
Littleton, CO 80128
Phone: 303-972-9112 FAX: 303-972-9114
Region 6 RLB

As Constructed
No Revisions:
Revised:
Void:

WALL-F-16-EJ
SECTIONS

Designer: J. Roberts
Detailer: D. Anderson
Sheet Subset: WALL
Structure Numbers: WALL-F-16-EJ
Subset Sheets: W11 of W59

Project No./Code
ES6 0852-103
17679
Sheet Number 141

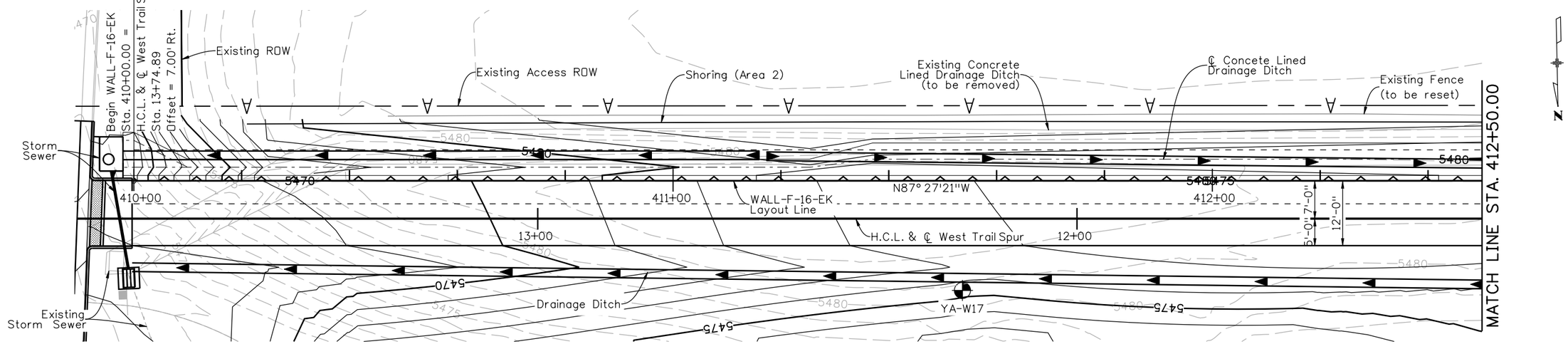

PLAN

NOTE:

1. Refer to Sheet W13 for notes.

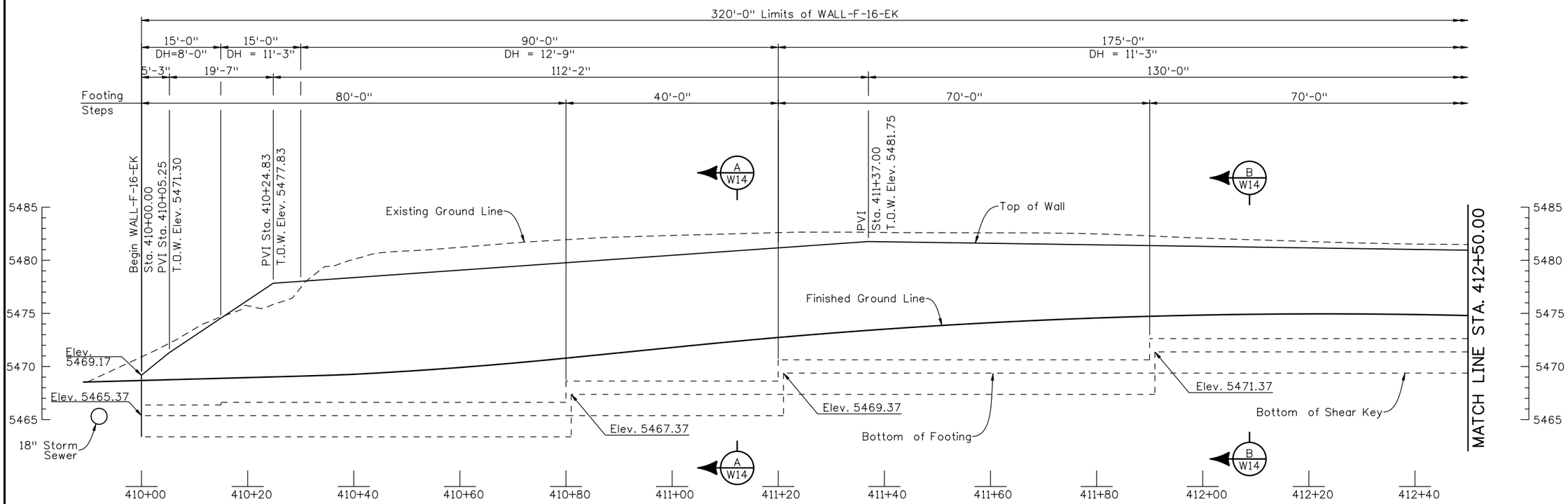

ELEVATION

Quantities			
Quantities By	DSD	INITIAL	DATE
Checked By	TWM	TWM	01/10

Detail			
Detailed By	RGA	INITIAL	DATE
Checked By	TWM	TWM	01/10

Design			
Designed By	JAR	INITIAL	DATE
Checked By	TWM	TWM	01/10

DAnderson 2:47:43 PM M:\TRN\07-100-311-12\14679\Bridge\Drawings\Walls\WallF-16-EK\14679EK_CIPWallLay_01.dgn

Print Date: 1/19/2010
File Name: 14679EK_CIPWallLay_01.dgn
Horiz. Scale: 20 Vert. Scale: 10
Unit Information 0224 Unit Leader Initials MH

WILSON & COMPANY Engineers & Architects
999 18TH STREET, SUITE 2600
DENVER, CO 80202
PHONE: 303-297-2976
FAX: 303-297-2693

Sheet Revisions		
Date:	Comments	Init.

Colorado Department of Transportation
DOT DEPARTMENT OF TRANSPORTATION
8833 South Wadsworth Court
Littleton, CO 80128
Phone: 303-972-9112 FAX: 303-972-9114
Region 6 RLB

As Constructed
No Revisions:
Revised:
Void:

WALL-F-16-EK
PLAN AND ELEVATION (1 OF 2)

Designer:	J. Roberts	Structure Numbers	WALL-F-16-EK
Detailer:	R. Artman		
Sheet Subset:	WALL	Subset Sheets: W12 of W59	

Project No./Code
ES6 0852-103
17679
Sheet Number 142

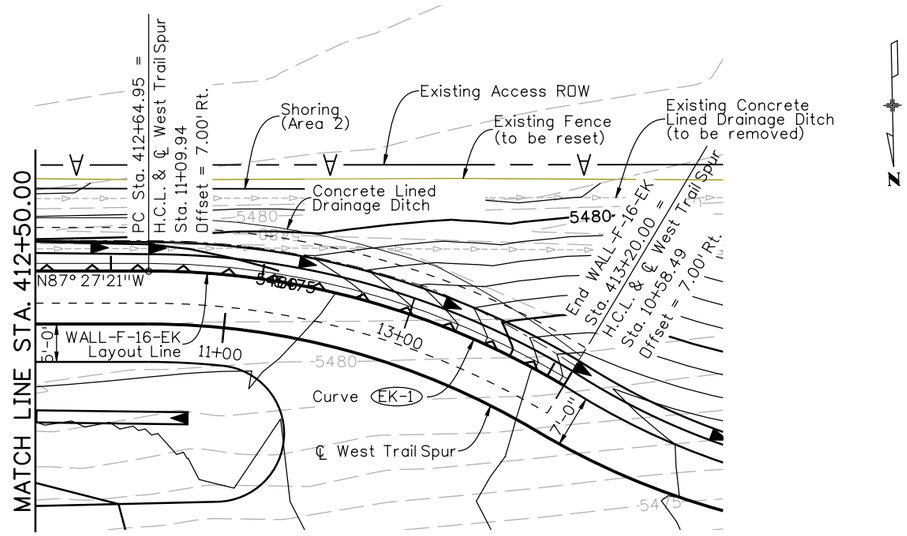

PLAN

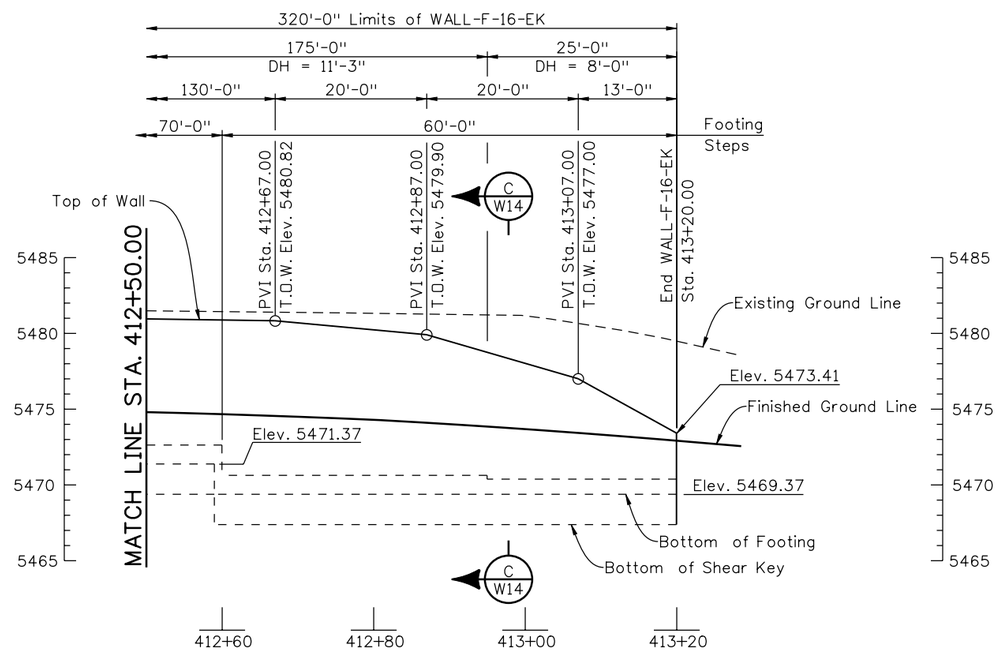

ELEVATION

WALL-F-16-EK LAYOUT LINE CURVE DATA

Curve EK-1
Δ = 29° 28'40" Rt.
D = 53° 32'51"
T = 28.15'
L = 55.05'
R = 107.00'

NOTES:

1. All horizontal dimensions are measured along H.C.L. & ℄ Trail.
2. See Roadway Plans for location of combination wire fence.
3. For expansion joint and weakened plane details, see CIP Wall Details sheet.
4. For architectural details, see CIP Architecture Details sheet.
5. For ℄ Trail slab elevations, see Typical Sections and Profile sheets of Trail.
6. See Roadway Plans for location of combination wire fence.
7. For concrete lined ditch details and extents, see Drainage Plans.

Design			Detail			Quantities		
	INITIAL	DATE		INITIAL	DATE		INITIAL	DATE
Designed By	JAR	01/10	Detailed By	RGA	01/10	Quantities By	DSO	01/10
Checked By	TWM	01/10	Checked By	TWM	01/10	Checked By	TWM	01/10

DAnderson 2:44:46 PM M:\TRN\07-100-311-12\14679\Bridge\Drawings\Walls\Wall F-16-EK\14679EK_CIPWallLay_02.dgn

Print Date: 1/19/2010
File Name: 14679EK_CIPWallLay_02.dgn
Horiz. Scale: 20 Vert. Scale: 10
Unit Information 0224 Unit Leader Initials MH

WILSON & COMPANY Engineers & Architects
999 18TH STREET, SUITE 2600
DENVER, CO 80202
PHONE: 303-297-2976
FAX: 303-297-2693

Sheet Revisions		
Date:	Comments	Init.

Colorado Department of Transportation
DOT
DEPARTMENT OF TRANSPORTATION
8833 South Wadsworth Court
Littleton, CO 80128
Phone: 303-972-9112 FAX: 303-972-9114
Region 6 RLB

As Constructed
No Revisions:
Revised:
Void:

WALL-F-16-EK
PLAN AND ELEVATION (2 OF 2)

Designer:	J. Roberts	Structure Numbers	WALL-F-16-EK
Detailer:	R. Artman		
Sheet Subset:	WALL	Subset Sheets:	W13 of W59

Project No./Code
ES6 0852-103
17679
Sheet Number 143

14679EK_CIPWallLay_02.dgn 1/19/2010 2:44:47 PM

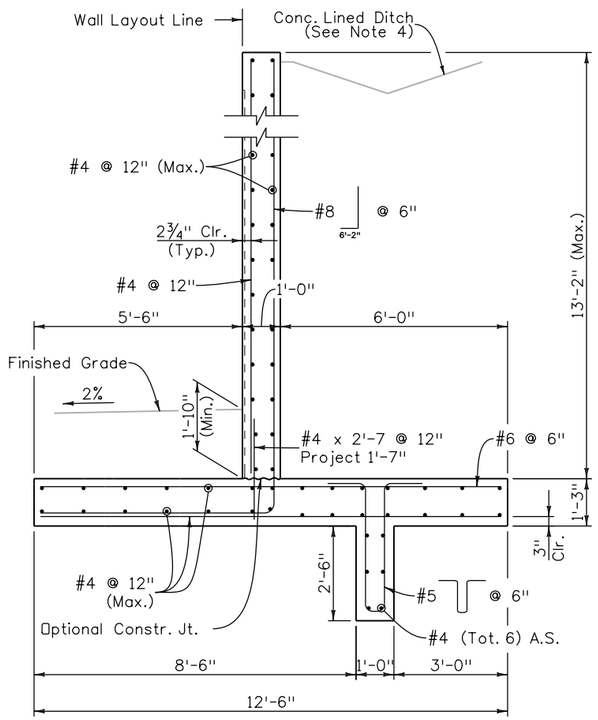

SECTION A W12

(DH = 12'-9")

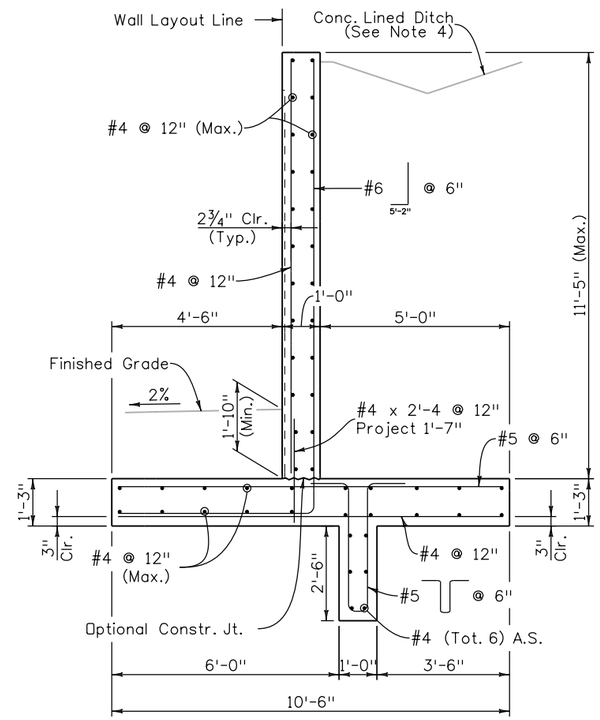

SECTION B W12

(DH = 11'-3")

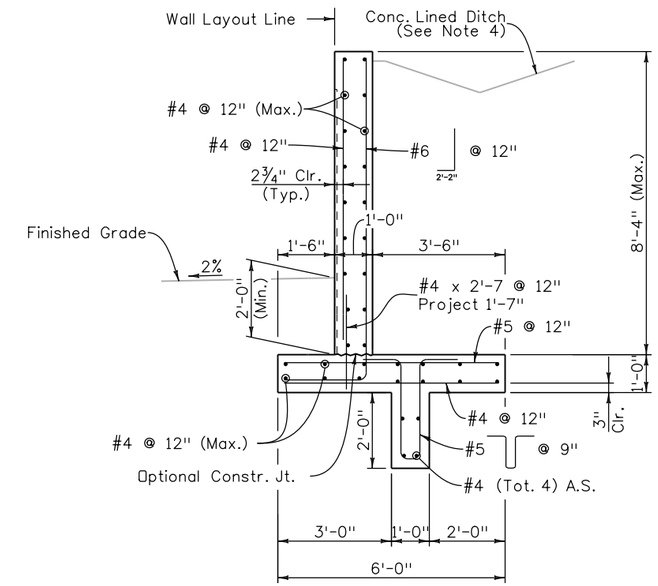

SECTION C W13

(DH = 8'-0")

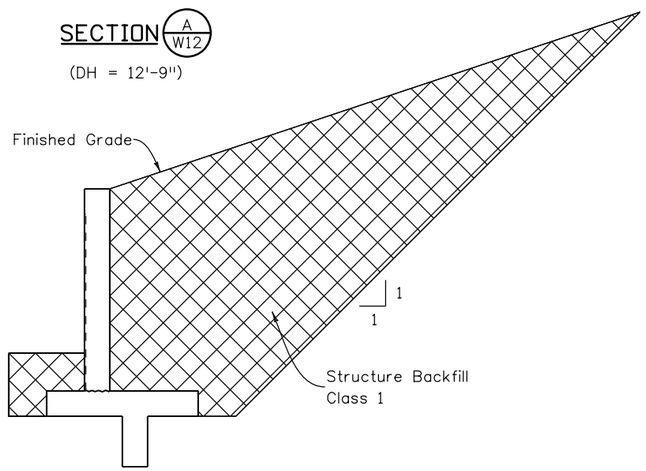

STRUCTURE BACKFILL
WITHOUT TEMPORARY SHORING

(DH = 8'-0")

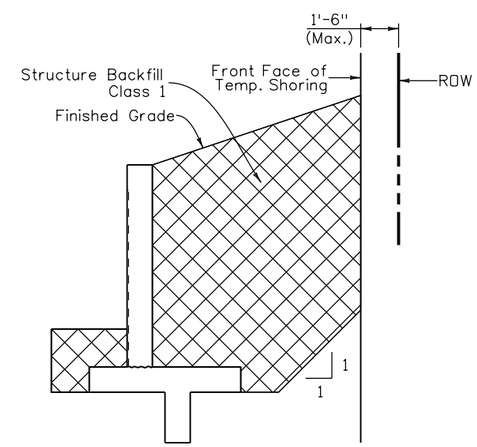

STRUCTURE BACKFILL
WITH TEMPORARY SHORING

(DH ≥ 11'-3")

NOTES:

1. Concrete shall be Concrete Class D (Wall).
2. All reinforcing is 2" clear unless noted otherwise.
3. Finish grade shall be a minimum of 3'-0" above bottom of footing elevations.
4. For concrete lined ditch details, see Drainage Plans.
5. For architectural details, see CIP Architucture Details sheet.
6. Pay limits for Structure Backfill (Class 1) shall be in accordance with M-206-1.

Quantities			
		INITIAL	DATE
Quantities By	DSO	01/10	
Checked By	TWM	01/10	

Detail			
		INITIAL	DATE
Detailed By	DRA	01/10	
Checked By	DSO	01/10	

Design			
		INITIAL	DATE
Designed By	JAR	01/10	
Checked By	DSO	01/10	

DAnderson 11:44:38 AM M:\TRN\07-100-311-12\14679\Bridge\Drawings\Walls\WallF-16-EK\14679EK_Details_01.dgn

Print Date: 1/19/2010
File Name: 14679EK_Details_01.dgn
Horiz. Scale: 1:1 Vert. Scale: As Noted
Unit Information 0224 Unit Leader Initials MH

WILSON & COMPANY Engineers & Architects
999 18TH STREET, SUITE 2600
DENVER, CO 80202
PHONE: 303-297-2976
FAX: 303-297-2693

Sheet Revisions		
Date:	Comments	Init.

Colorado Department of Transportation
8833 South Wadsworth Court
Littleton, CO 80128
Phone: 303-972-9112 FAX: 303-972-9114
Region 6 RLB

As Constructed
No Revisions:
Revised:
Void:

WALL-F-16-EK SECTIONS

Designer: J. Roberts
Detailer: R. Artman
Sheet Subset: WALL
Structure Numbers: WALL-F-16-EK
Subset Sheets: W14 of W59

Project No./Code
ES6 0852-103
17679
Sheet Number 144

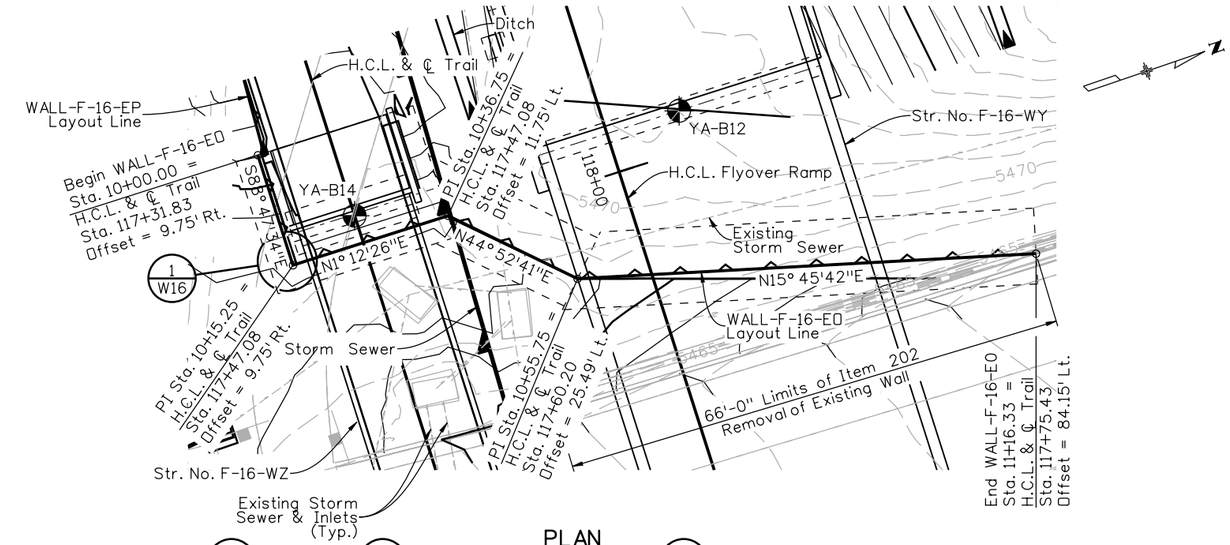

PLAN

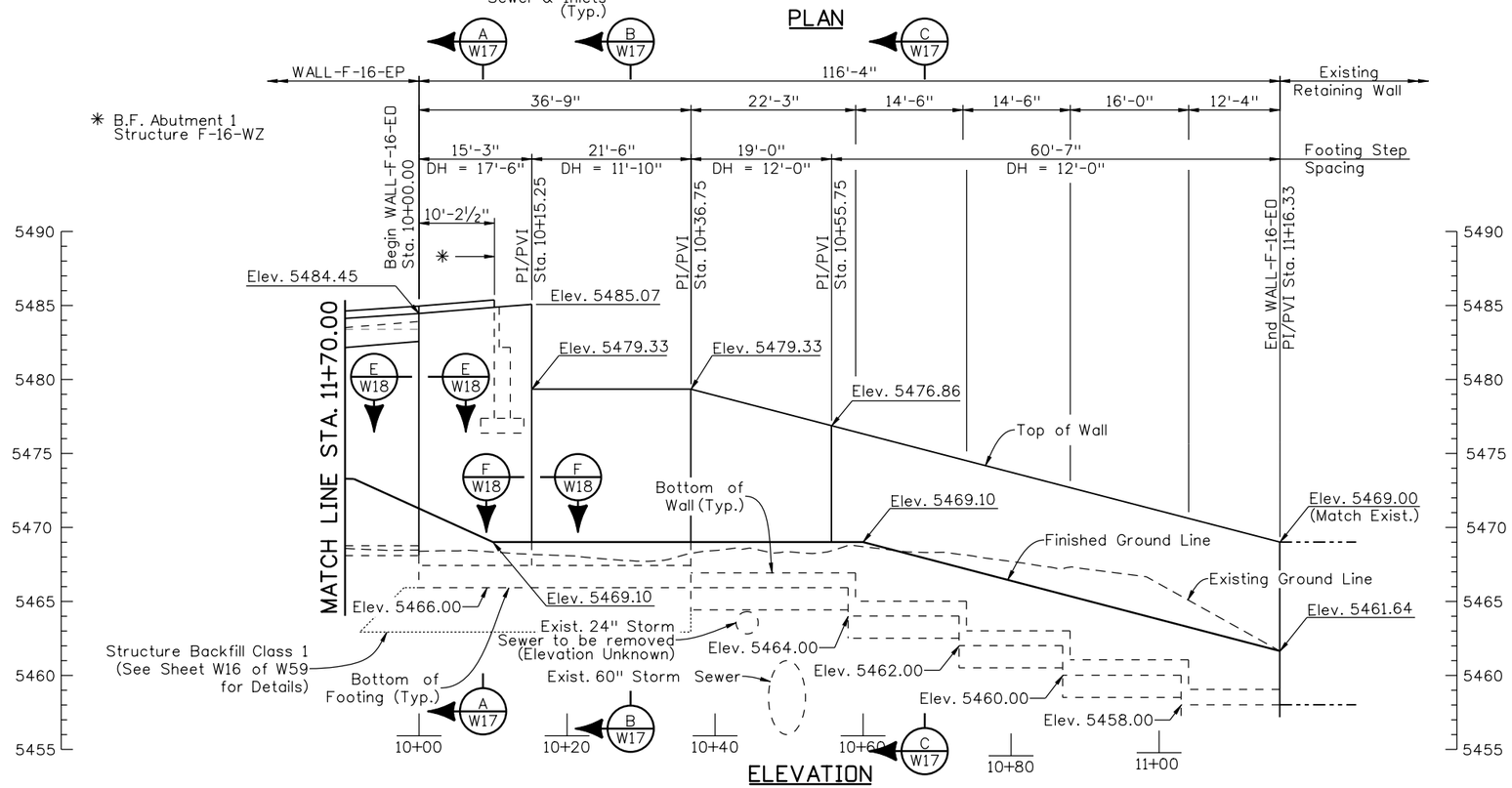

ELEVATION

NOTES:

1. All horizontal dimensions are measured along H.C.L. & ℄ Trail.
2. See Roadway Plans for location of combination wire fence.
3. For expansion joint and weakened plane details, see CIP Wall Details sheet.
4. For architectural details, see CIP Architecture Details sheet.
5. For ℄ Trail slab elevations, see Typical Sections and Profile sheets of Trail.
6. See Roadway Plans for location of combination wire fence.
7. For concrete lined ditch details, see Drainage Plans.
8. For relocation or removal of utilities and storm sewer, see Roadway Plans and Drainage Plans.

Design			Detail			Quantities		
	INITIAL	DATE		INITIAL	DATE		INITIAL	DATE
Designed By	JAR	10/09	Detailed By	RGA	01/10	Quantities By	AML	01/10
Checked By	TWM	01/10	Checked By	TWM	01/10	Checked By	TWM	01/10

DAnderson 11:45:46 AM M:\TRN\07-100-311-12\14679\Bridge\Drawings\Walls\Walls F-16-EP and F-16-EO\14679EP-EO_WallLay_02.dgn

Print Date: 1/19/2010	Sheet Revisions	Colorado Department of Transportation	As Constructed
File Name: 14679EP-EO_WallLay_02.dgn	Date: / Comments / Init.	8833 South Wadsworth Court Littleton, CO 80128 Phone: 303-972-9112 FAX: 303-972-9114	No Revisions:
Horiz. Scale: 20 Vert. Scale: 10		Region 6 RLB	Revised:
Unit Information 0224 Unit Leader Initials MH			Void:
WILSON & COMPANY Engineers & Architects 999 18TH STREET, SUITE 2600 DENVER, CO 80202 PHONE: 303-297-2976 FAX: 303-297-2993			

WALL-F-16-EO PLAN AND ELEVATION			Project No./Code
Designer: J. Roberts	Structure Numbers	WALL-F-16-EO	ES6 0852-103
Detailer: R. Artman			17679
Sheet Subset: WALL	Subset Sheets: W15 of W59		Sheet Number 145

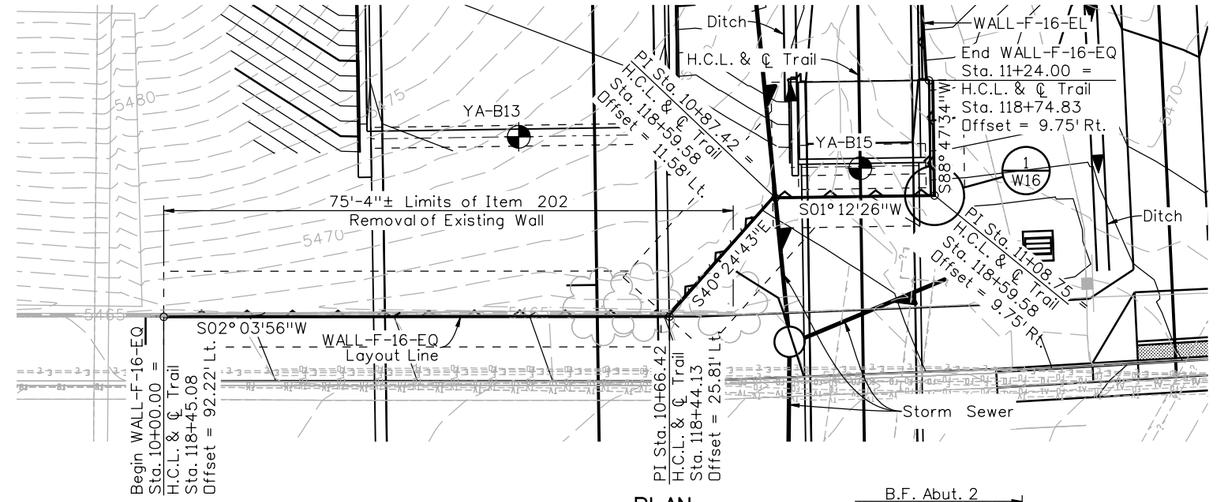

PLAN

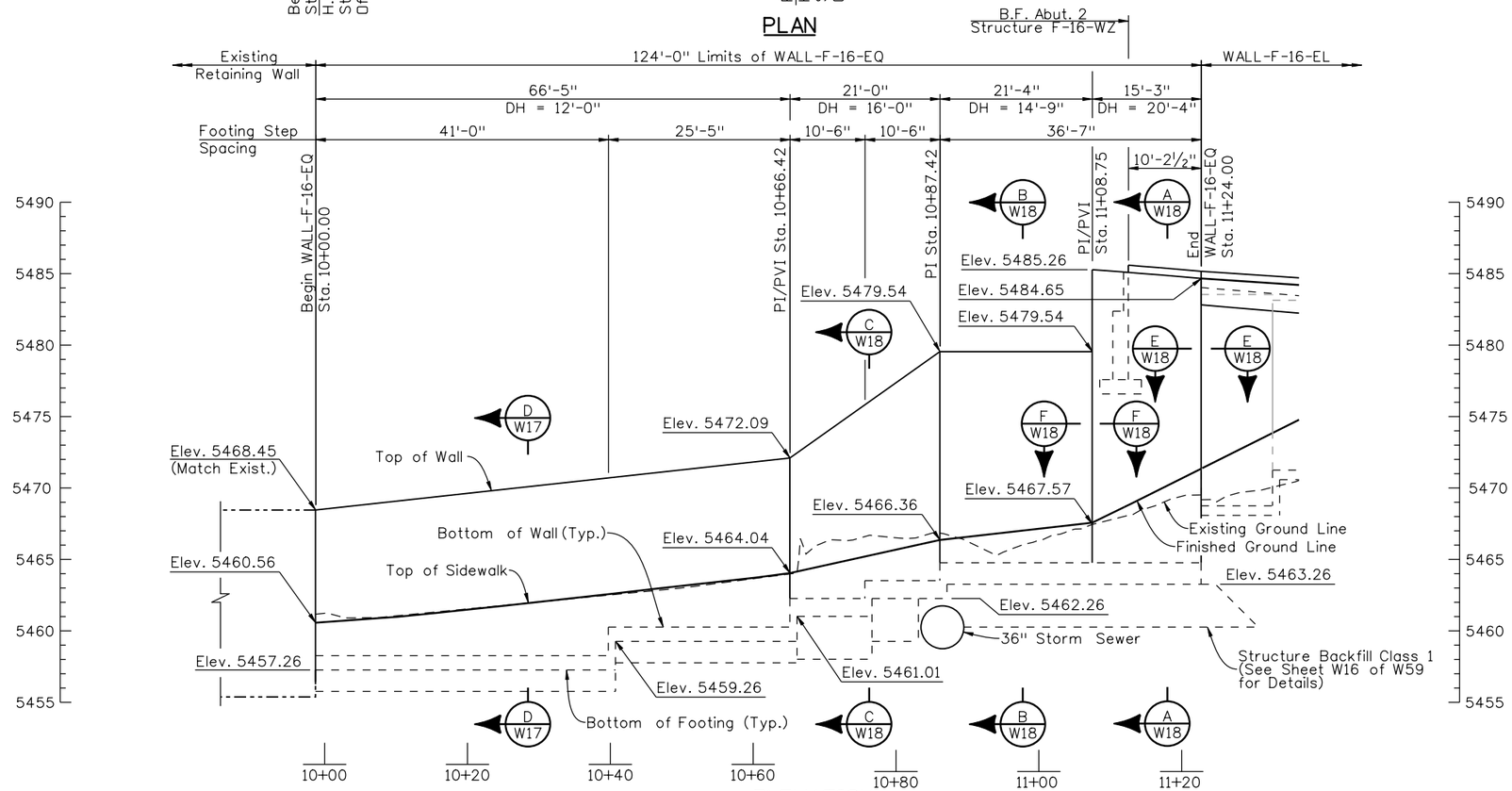

ELEVATION

NOTES:

1. All horizontal dimensions are measured along H.C.L. & ℄ Trail.
2. See Roadway Plans for location of combination wire fence.
3. For expansion joint and weakened plane details, see CIP Wall Details sheet.
4. For architectural details, see CIP Architecture Details sheet.
5. For ℄ Trail slab elevations, see Typical Sections and Profile sheets of Trail.
6. See Roadway Plans for location of combination wire fence.
7. For concrete lined ditch details, see Drainage Plans.
8. For relocation or removal of utilities and storm sewer, see Roadway Plans and Drainage Plans.

Design	INITIAL	DATE	Detail	INITIAL	DATE	Quantities	INITIAL	DATE
Designed By	JAR	01/10	Detailed By	RGA	10/09	Quantities By	AML	01/10
Checked By	TWM	01/10	Checked By	TWM	01/10	Checked By	TWM	01/10

D:Anderson 11:53:40 AM M:\TRN\07-100-311-12\14679\Bridge\Drawings\Walls\Walls F-16-EL and F-16-EQ\14679EL-EQ_WallLay_01.dgn

Print Date: 1/19/2010
File Name: 14679EL-EQ_WallLay_01.dgn
Horiz. Scale: 20 Vert. Scale: 10
Unit Information 0224 Unit Leader Initials MH

WILSON & COMPANY Engineers & Architects
999 18TH STREET, SUITE 2600
DENVER, CO 80202
PHONE: 303-297-2976
FAX: 303-297-2693

Sheet Revisions		
Date:	Comments	Init.

Colorado Department of Transportation
DOT
8833 South Wadsworth Court
Littleton, CO 80128
Phone: 303-972-9112 FAX: 303-972-9114
Region 6 RLB

As Constructed
No Revisions:
Revised:
Void:

WALL-F-16-EQ
PLAN AND ELEVATION

Designer: J. Roberts
Detailer: R. Artman
Sheet Subset: WALL
Structure Numbers: WALL-F-16-EQ
Subset Sheets: W16 of W59

Project No./Code
ES6 0852-103
17679
Sheet Number 146

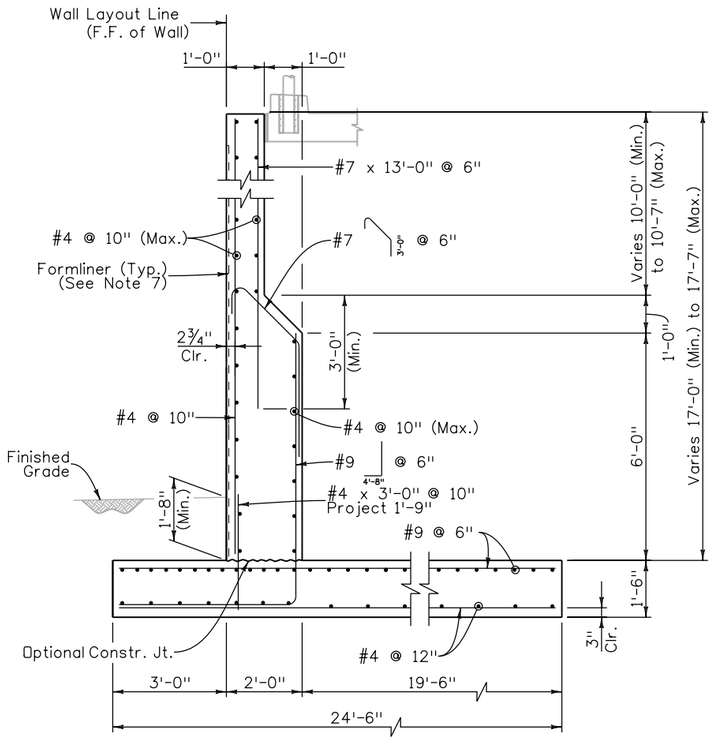

SECTION A W15

(WALL-F-16-EO)
(DH = 17'-6")

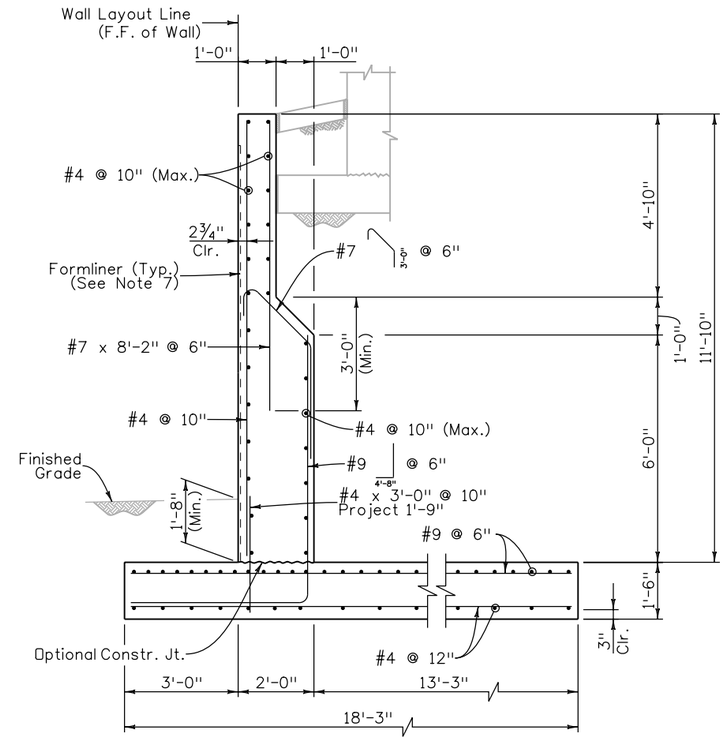

SECTION B W15

(WALL-F-16-EO)
(DH = 11'-10")

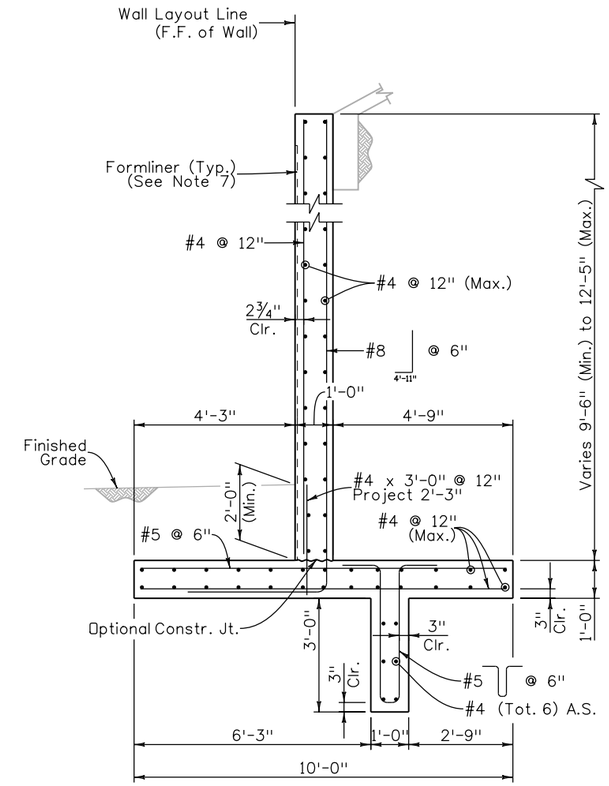

SECTION C W15 D W16

(WALL-F-16-EO & WALL-F-16-EQ)
(DH = 12'-0")

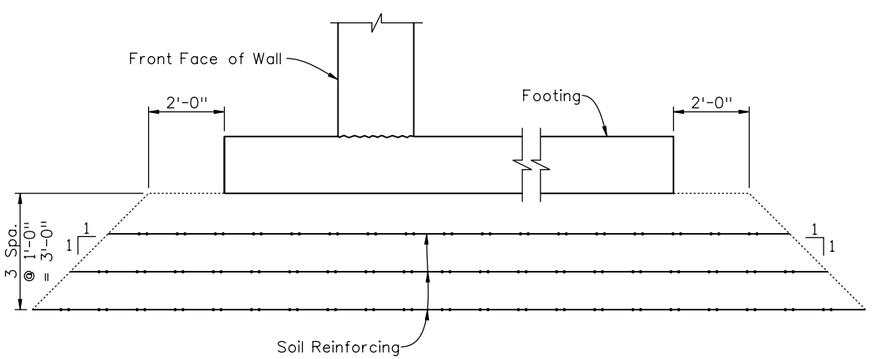

CIP WALL - SOIL REINFORCING DETAIL

(WALL-F-16-EO & WALL-F-16-EQ)

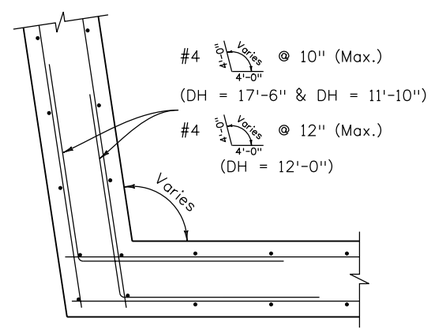

CORNER DETAIL 1 W15 1 W16

(WALL-F-16-EO & WALL-F-16-EQ)

NOTES:

1. Concrete shall be Concrete Class D (Wall).
2. Geotextile reinforcement shall be woven fabric with a Minimum Average Roll Value of 4800 lb/ft for installations with a gap and 2400 lb/ft for installations without a gap based on ASTM D4595.
3. Geotextile Reinforcement shall be placed by alternating Machine Direction (MD) with Cross Machine Direction (XD) from layer to layer.
4. Minimum splice of all Geofabric shall consist of 6" of overlap.
5. Payment will be made under item 206 Mechanical Reinforcement of Soil (cu.yd.) and Item 206 Structure Backfill (Class 1) (cu.yd.) and Shall include the cost for 6 inch Perforated Pipe underdrain and Subsurface Drain Outlet (6"Ø Non-Perforated Pipe).
6. Finish grade shall be a minimum of 3'-0" above bottom of footing elevations.
7. For architectural details, see CIP Architecture Details sheet.
8. For approach slab, abutment and slope paving details, see Bridge Plans.

Quantities			
Quantities By	INITIAL	DATE
AML	01/10
TWM	01/10

Detail			
Detailed By	INITIAL	DATE
DRA	01/10
DSO	01/10

Design			
Designed By	INITIAL	DATE
JAR	01/10
DSO	01/10

Quantities Checked By: TWM 01/10
Detail Checked By: DSO 01/10
Design Checked By: DSO 01/10

DAnderson 2:49:30 PM M:\TRN\07-100-311-12\14679\Bridge\Drawings\Walls\Walls F-16-EP and F-16-EO\14679EO_WallTyp_Sections.dgn

Print Date: 1/19/2010
File Name: 14679EO_WallTyp_Sections.dgn
Horiz. Scale: 1:1 Vert. Scale: As Noted
Unit Information 0224 Unit Leader Initials MH

WILSON & COMPANY Engineers & Architects
999 18TH STREET, SUITE 2600
DENVER, CO 80202
PHONE: 303-297-2976
FAX: 303-297-2693

Sheet Revisions		
Date:	Comments	Init.

Colorado Department of Transportation
DOT DEPARTMENT OF TRANSPORTATION
8833 South Wadsworth Court
Littleton, CO 80128
Phone: 303-972-9112 FAX: 303-972-9114
Region 6 RLB

As Constructed
No Revisions:
Revised:
Void:

WALL-F-16-EO & WALL-F-16-EQ
SECTIONS (1 OF 2)

Designer: J. Roberts
Detailer: D. Anderson
Sheet Subset: WALL
Structure Numbers: WALL-F-16-EO, WALL-F-16-EQ
Subset Sheets: W17 of W59

Project No./Code
ES6 0852-103
17679
Sheet Number 147

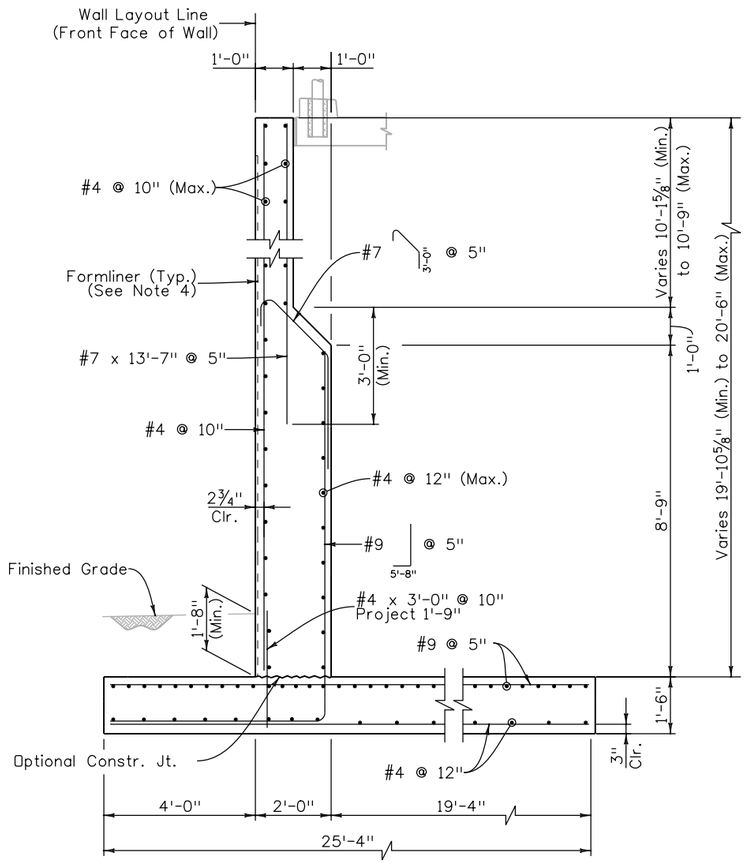

SECTION A W16
(WALL-F-16-EQ)
(DH = 20'-4")

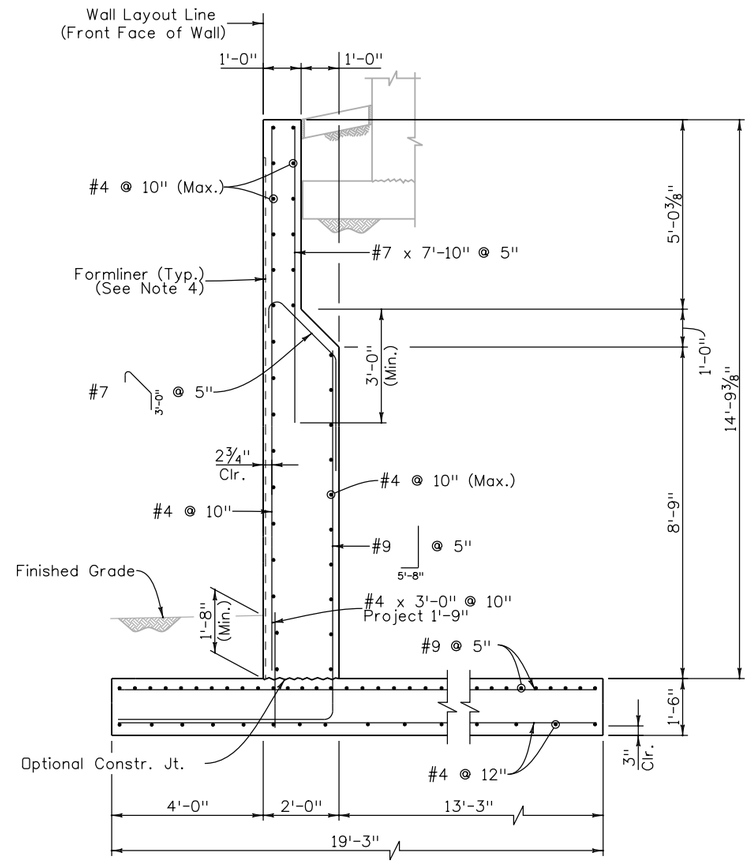

SECTION B W16
(WALL-F-16-EQ)
(DH = 14'-9")

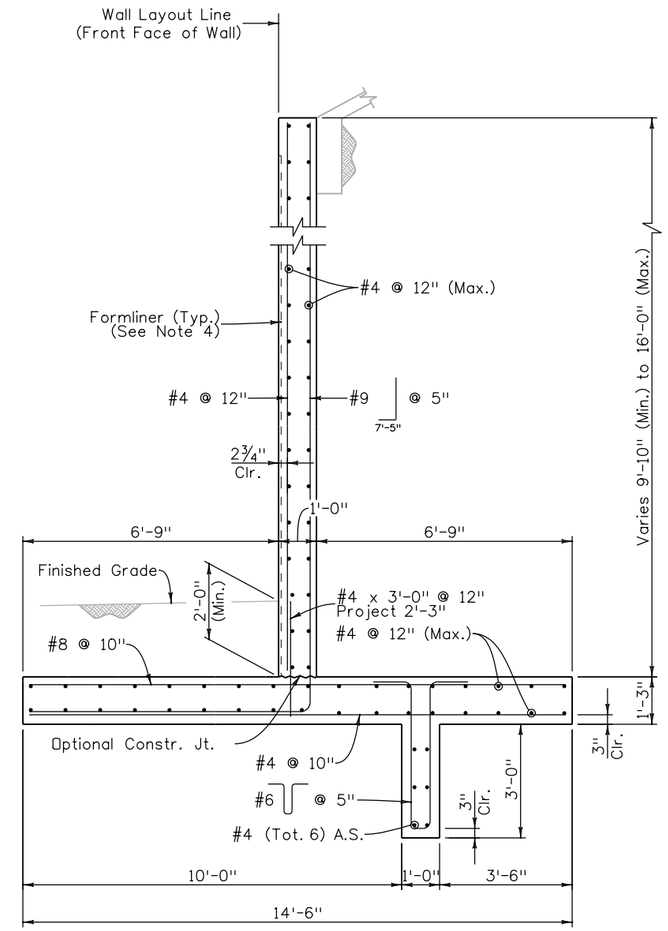

SECTION D W16
(WALL-F-16-EQ)
(DH = 16'-0")

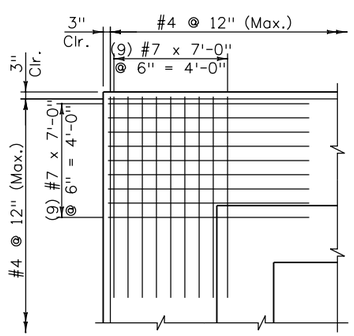

SECTION F W16
(WALL-F-16-EQ)

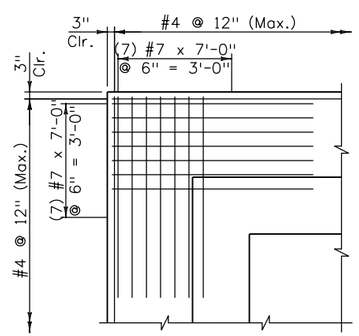

SECTION F W15
(WALL-F-16-EQ)

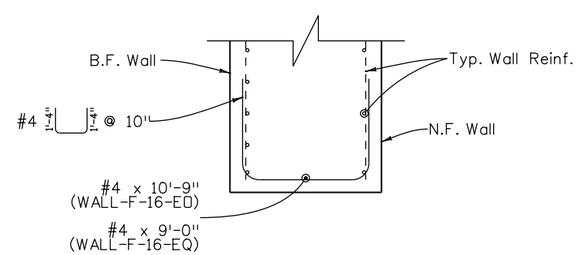

PARTIAL SECTION E W15 E W16

NOTES:

1. Concrete shall be Concrete Class D (Wall).
2. All reinforcing is 2" clear unless noted otherwise.
3. Finish grade shall be a minimum of 3'-0" above bottom of footing elevations.
4. For architectural details, see CIP Architecture Details sheet.
5. For approach slab, abutment and slope paving details, see Bridge Plans.

Quantities			
Quantities By	INITIAL	DATE	
Checked By	TWM	01/10	

Detail			
Detailed By	DRA	01/10	
Checked By	DSO	01/10	

Design			
Designed By	JAR	01/10	
Checked By	DSO	01/10	

Print Date: 1/19/2010
File Name: 14679EQ_WallTyp_Sections.dgn
Horiz. Scale: 1:1 Vert. Scale: As Noted
Unit Information 0224 Unit Leader Initials MH

WILSON & COMPANY Engineers & Architects
999 18TH STREET, SUITE 2600
DENVER, CO 80202
PHONE: 303-297-2976
FAX: 303-297-2693

Sheet Revisions

Date:	Comments	Init.

Colorado Department of Transportation
8833 South Wadsworth Court
Littleton, CO 80128
Phone: 303-972-9112 FAX: 303-972-9114
Region 6 RLB

As Constructed
No Revisions:
Revised:
Void:

WALL-F-16-EO & WALL-F-16-EQ
SECTIONS (2 OF 2)

Designer: J. Roberts
Detailer: D. Anderson
Sheet Subset: WALL
Structure Numbers: WALL-F-16-EO, WALL-F-16-EQ
Subset Sheets: W18 of W59

Project No./Code
ES6 0852-103
17679
Sheet Number 148

DAnderson 11:49:20 AM M:\TRN\07-100-311-12\14679\Bridge\Drawings\Walls\Walls F-16-EL and F-16-EQ\14679EQ_WallTyp_Sections.dgn

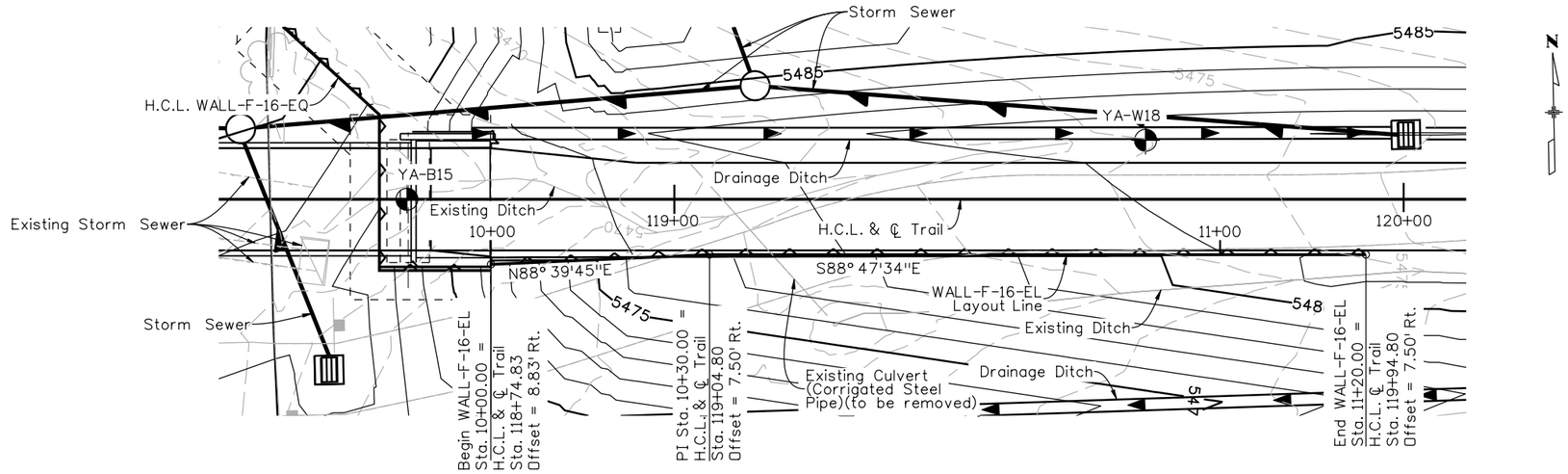

PLAN

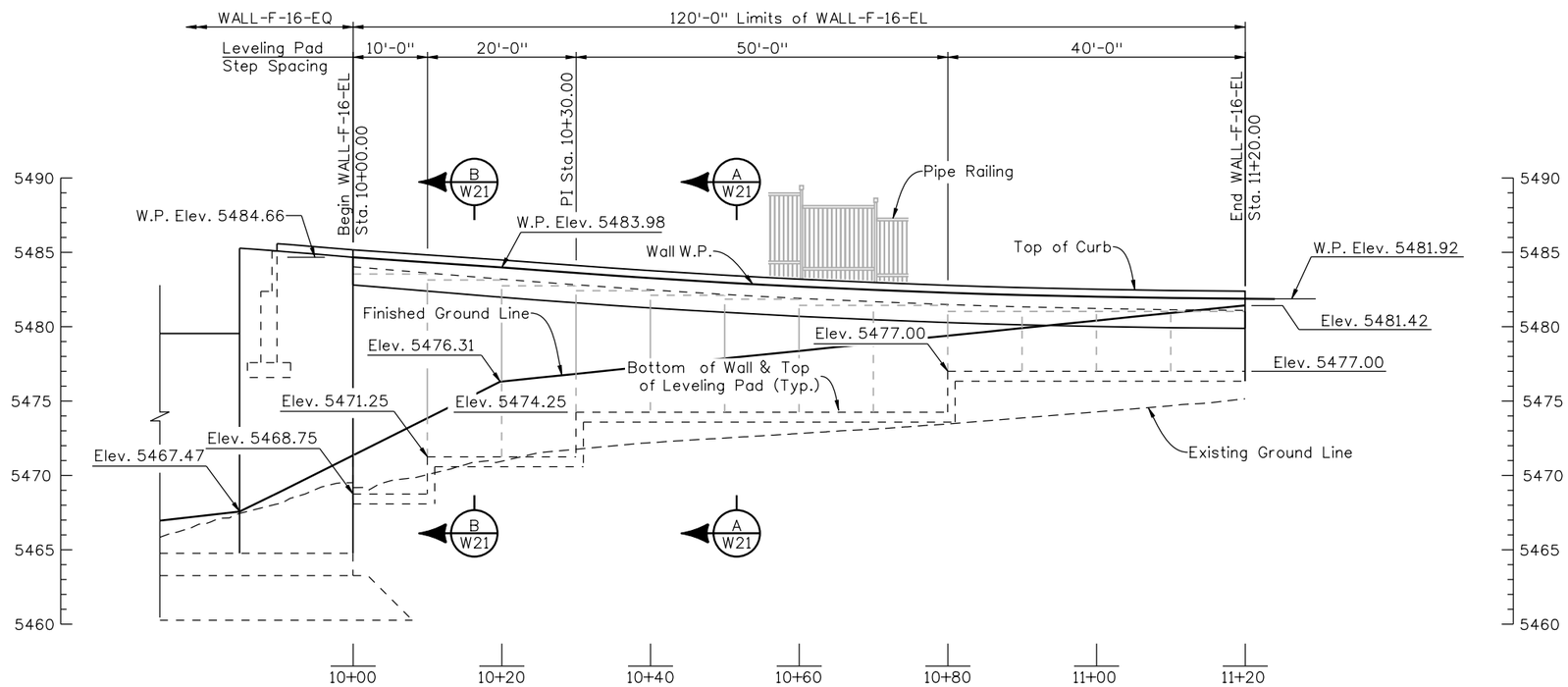

ELEVATION

NOTES:

1. W.P. is to follow P.G.L. of Trail. For P.G.L. elevations, see Profile sheets.
2. For MSE wall details, see MSE Wall Details sheets.
3. For architectural details, see MSE Wall Architecture Details sheets.
4. For pipe railing details, see Pipe Railing Details sheets.

Quantities			
		INITIAL	DATE
Quantities By		AML	01/10
Checked By		MJN	01/10

Detail			
		INITIAL	DATE
Detailed By		RGA	01/10
Checked By		TWM	01/10

Design			
		INITIAL	DATE
Designed By		JAR	01/10
Checked By		TWM	01/10

DAnderson 11:52:50 AM M:\TRN\07-100-311-12\14679\Bridge\Drawings\Walls\Walls F-16-EL and F-16-EQ\14679EL-EQ_WallLay_02.dgn

Print Date: 1/19/2010
File Name: 14679EL-EQ_WallLay_02.dgn
Horiz. Scale: 20 Vert. Scale: 10
Unit Information 0224 Unit Leader Initials MH

WILSON & COMPANY Engineers & Architects
999 18TH STREET, SUITE 2600
DENVER, CO 80202
PHONE: 303-297-2976
FAX: 303-297-2993

Sheet Revisions		
Date:	Comments	Init.

Colorado Department of Transportation
DOT DEPARTMENT OF TRANSPORTATION
8833 South Wadsworth Court
Littleton, CO 80128
Phone: 303-972-9112 FAX: 303-972-9114
Region 6 RLB

As Constructed
No Revisions:
Revised:
Void:

WALL-F-16-EL
PLAN AND ELEVATION

Designer: J. Roberts
Detailer: R. Artman
Sheet Subset: WALL
Structure Numbers: WALL-F-16-EL
Subset Sheets: W19 of W59

Project No./Code
ES6 0852-103
17679
Sheet Number 149

14679EL-EQ_WallLay_02.dgn 1/19/2010 11:52:50 AM

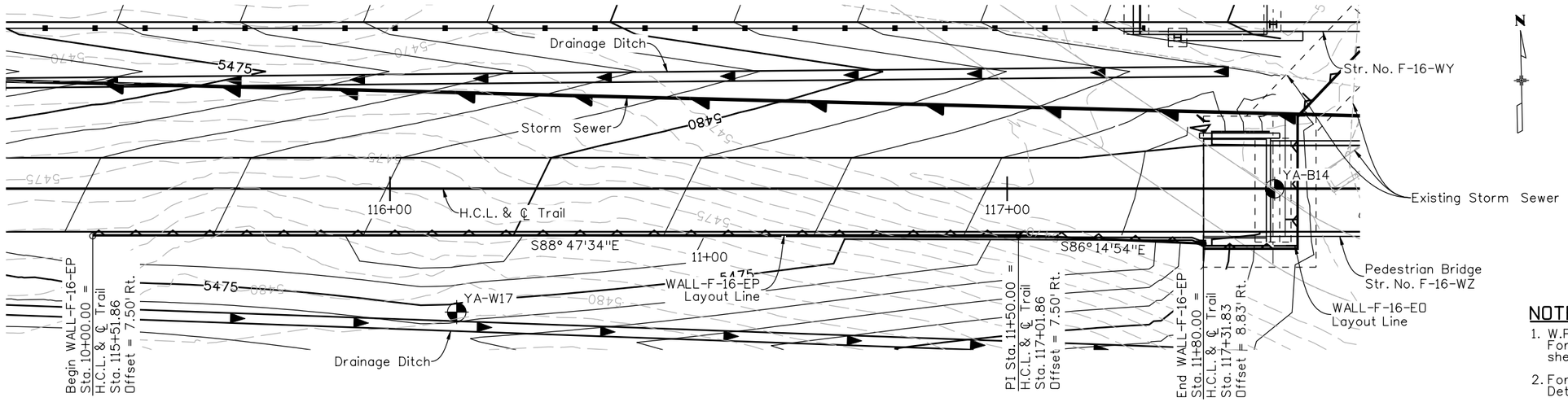

PLAN

NOTES:

1. W.P. is to follow P.G.L. of Trail. For P.G.L. elevations, see Profile sheets.
2. For MSE wall details, see MSE Wall Details sheets.
3. For architecture details, see MSE Wall Architecture Details sheets.
4. For pipe railing details, see Pipe Railing Details sheets.

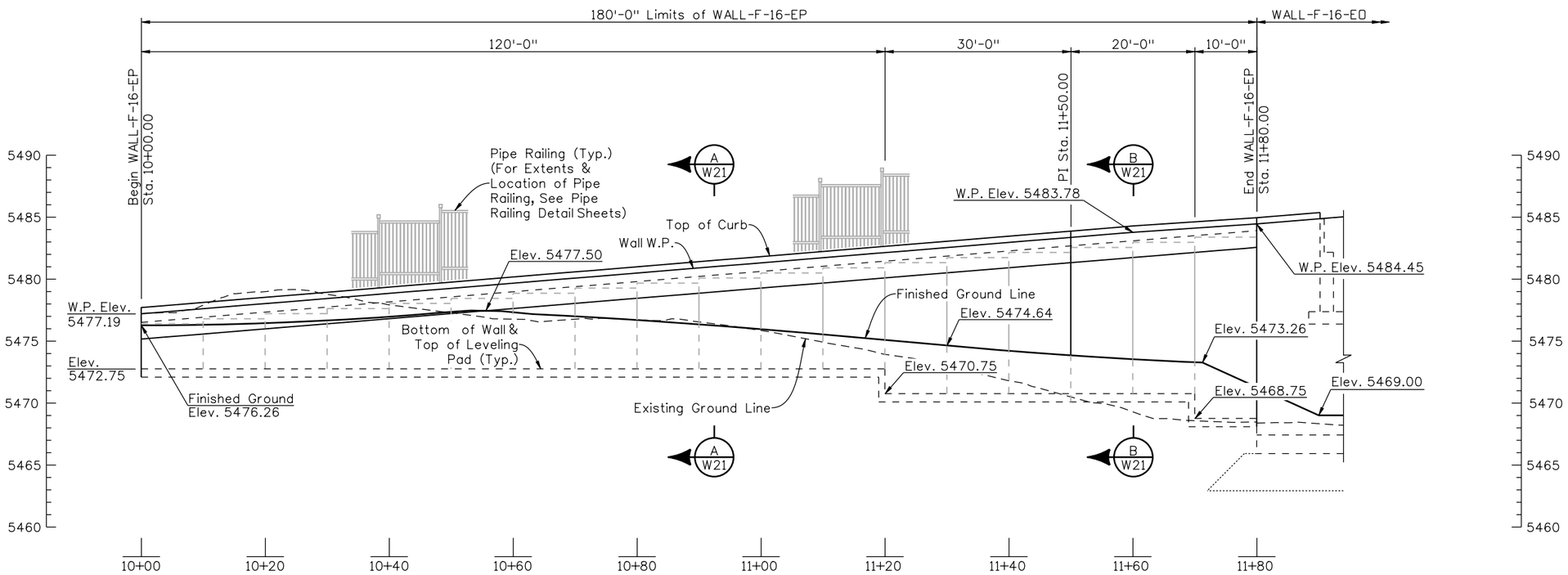

ELEVATION

Design				Detail				Quantities			
	INITIAL	DATE		INITIAL	DATE		INITIAL	DATE		INITIAL	DATE
Designed By	JAR	01/10	Detailed By	RGA	01/10	Quantities By	AML	01/10			
Checked By	TWM	01/10	Checked By	TWM	01/10	Checked By	MJN	01/10			

DAnderson 11:46:39 AM M:\TRN\07-100-311-12\14679\Bridge\Drawings\Walls\Walls F-16-EP and F-16-EO\14679EP-EO_WallLay_01.dgn

Print Date: 1/19/2010		Sheet Revisions			
File Name: 14679EP-EO_WallLay_01.dgn		Date:	Comments	Init.	
Horiz. Scale: 20	Vert. Scale: 10				
Unit Information 0224	Unit Leader Initials MH				

WILSON & COMPANY Engineers & Architects — 999 18TH STREET, SUITE 2600, DENVER, CO 80202, PHONE: 303-297-2976, FAX: 303-297-2693

Colorado Department of Transportation
8833 South Wadsworth Court
Littleton, CO 80128
Phone: 303-972-9112 FAX: 303-972-9114
Region 6 RLB

As Constructed				
No Revisions:	WALL-F-16-EP PLAN AND ELEVATION			Project No./Code
Revised:	Designer: J. Roberts	Structure Numbers	WALL-F-16-EP	ES6 0852-103
	Detailer: R. Artman			17679
Void:	Sheet Subset: WALL	Subset Sheets: W20 of W59		Sheet Number 150

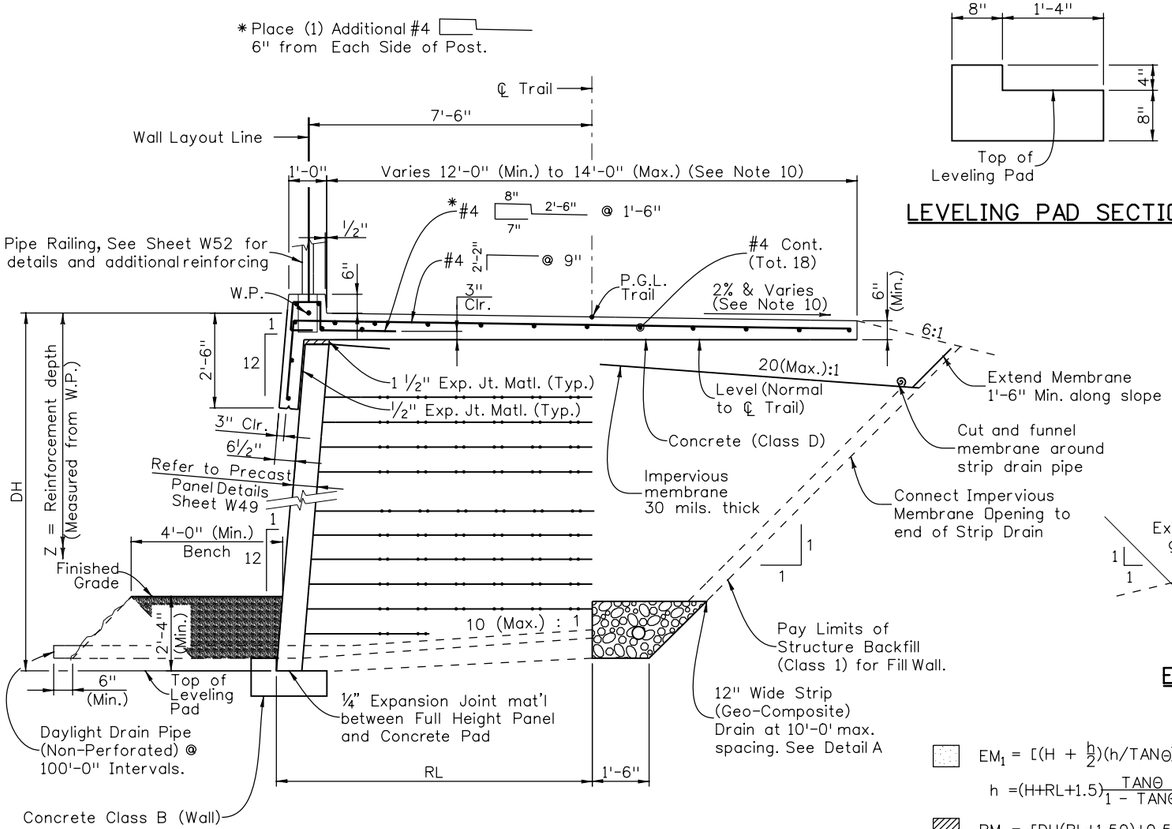

A W20 A W19 TYPICAL SECTION
Looking Back Station

LEVELING PAD SECTION

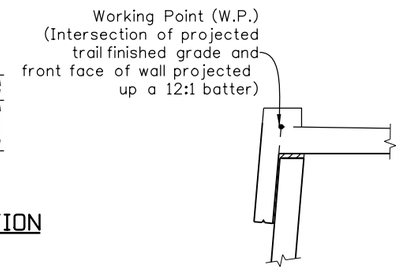

WORKING POINT DETAIL

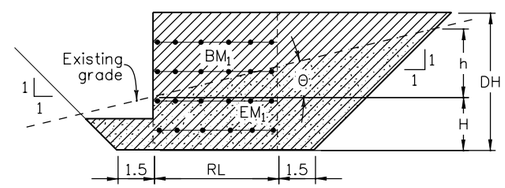

EARTHWORK QUANTITIES

$EM_1 = [(H + \frac{h}{2})(h/TAN\Theta)+0.75H+ \frac{(H - 1.5\ TAN\Theta)(0.5H + 0.75)}{1 - TAN\Theta} -0.5(H+h)^2]/27$

$h = (H+RL+1.5)\frac{TAN\Theta}{1 - TAN\Theta}$

$BM_1 = [DH(RL+1.50)+0.5(DH)^2+1.5(1.50)^2]/27$

Θ = Average angle of existing ground line

$MRS = (DH)(RL)/27$

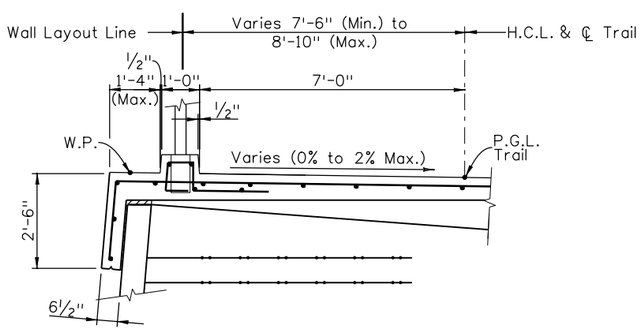

B W20 B W19 TYPICAL SECTION
Looking Back Station

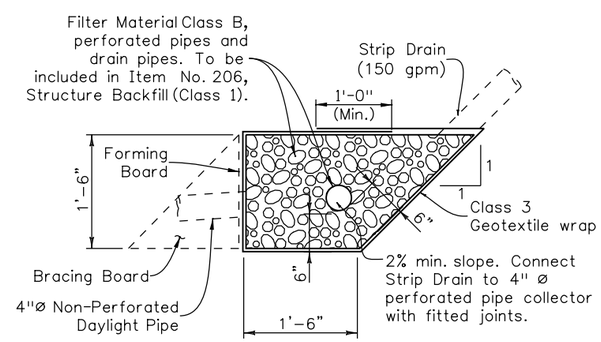

DETAIL A

NOTES

1. 2'-4" (min.) Structure Backfill (Class 2) is required for erosion control and to conceal and protect a stepped leveling pad. The cost for this material shall be included in the cost for Structure Backfill (Class 1).
2. Soil Reinforcement may be cut to accommodate pipe installation. The cut shall be made in a direction parallel to the pipe centerline, as seen in a plan view.
3. The membrane shall be installed with a constant slope from the facing block all way to the back in conjunction with the geo-composite down drains at and along the temporary cut slope. The geo-composite drains that connect to the water collector system shall be minimum 12" in width with 10' maximum spacing.
4. All Pipes and Connectors shall be schedule 40 H.D.P.E.
5. Wall connection plate and necessary attachment shall not be paid for separately but shall be included in Item 504 Precast Panel Facing.
6. One side temporary forming board is required to build Detail A. The filter material shall be wrapped with erosion control Class 3 Geotextiles.
7. W.P. is to follow P.G.L. For P.G.L. elevations refer to profile sheets.
8. Refer to Trail/Roadway plans for Trail width and superelevation.
9. Adjust curb reinforcing to avoid pipe railing pocket connection blockouts.

ABBREVIATIONS USED

BM_1 = Quantities of Structure Backfill (Class 1) without Shoring (c.y./ft.)
BM_2 = Quantities of Structure Backfill (Class 1) with Shoring (c.y./ft.)
BP = Maximum Required Allowable Bearing Pressure (ksf)
DH = Design Height (or, Avg. ht. for qty. calculations) (ft.)
EM_1 = Quantity of Structure Excavation without Shoring (c.y./ft.)
EM_2 = Quantity of Structure Excavation with Shoring (c.y./ft)
H = Depth of Excavation at Wall Layout Line (ft.)
LTDS = Required Long Term Design Strength (lb./in.)
MARV = Minimum Average roll Value (lb./in.)
MRS = Quantity of Mechanical Reinforcement for prescribed soil zone (c.y./ft.)
RL = Reinforcement Length (ft.)
S = Tributary reinforcement spacing (ft.)
Total = Sum of required LTDS for all layers (lb/in)

DESIGN DATA

AASHTO, 16th Edition without interims for internal design only
Unit weight of conc = 150 pcf
Unit weight of soil = 125 pcf is assumed.

Internal friction angle of soil for Structure Backfill (Class 1) is assumed to be ø = 34°. Ka = 0.2827, K_0 = 0.4408
Coefficient of resistance to direct sliding = 0.9 (Geogrid)
= 0.6 (Geotextile)
See Project Special Provisions for the relationship between LTDS and MARV of Geosynthetic Soil Reinforcement.

Quantities			
	INITIAL	DATE	
Quantities By	AML	01/10	
Checked By	MJN	01/10	

Detail			
	INITIAL	DATE	
Detailed By	DRA	01/10	
Checked By	DSO	01/10	

Design			
	INITIAL	DATE	
Designed By	JAR	01/10	
Checked By	DSO	01/10	

Print Date: 1/19/2010
File Name: 14679_Trail_WallTyp_Sections.dgn
Horiz. Scale: 1:1 Vert. Scale: As Noted
Unit Information 0224 Unit Leader Initials MH

WILSON & COMPANY Engineers & Architects
999 18TH STREET, SUITE 2800
DENVER, CO 80202
PHONE: 303-297-2976
FAX: 303-297-2693

Sheet Revisions

Date:	Comments	Init.

Colorado Department of Transportation
DOT DEPARTMENT OF TRANSPORTATION
8833 South Wadsworth Court
Littleton, CO 80128
Phone: 303-972-9112 FAX: 303-972-9114
Region 6 RLB

As Constructed
No Revisions:
Revised:
Void:

TRAIL - MSE WALL
TYPICAL SECTION

Designer: J. Roberts
Detailer: D. Anderson
Sheet Subset: WALL
Structure Numbers: WALL-F-16-EL, WALL-F-16-EP
Subset Sheets: W21 of W59

Project No./Code
ES6 0852-103
17679
Sheet Number 151

GENERAL NOTES

The required LTDS for different reinforcement layer depths is determined
With the following equations, using the values as depicted in the Loading Diagram.

$\sigma_V = (Z + 2)\cdot\gamma_{soil}$

$LTDS \geq (K)\cdot(\sigma_V)\cdot(S)/12$ + Rail Impact
Where K = Ka for Geosynthetic reinforcement.

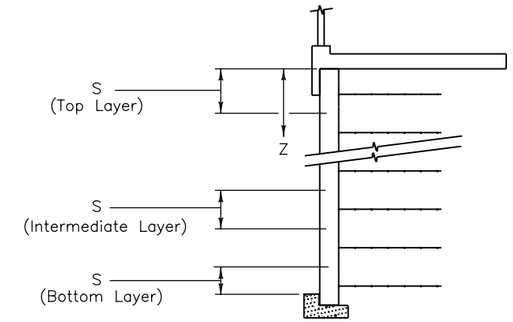

REINFORCEMENT PATTERN

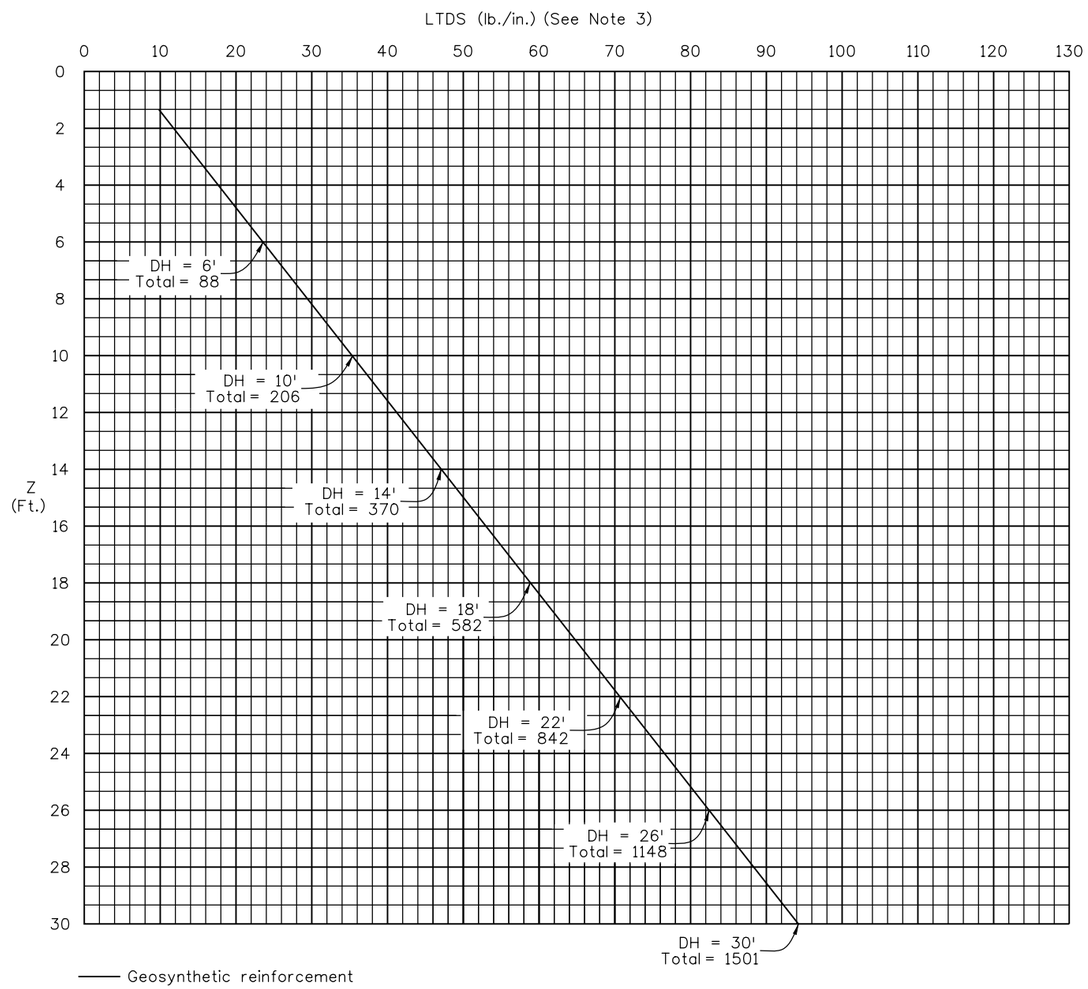

TABLE

Design parameters for wall heights from 3.00' to 18.00'

DH (ft)	RL** (ft)	BP (ksf)
3.0	6.00	0.86
4.0	6.00	1.20
5.0	6.00	1.39
6.0	6.00	1.56
7.0	7.00	1.68
8.0	8.00	1.79
9.0	8.00	1.91
10.0	8.00	2.03
11.0	8.00	2.17
12.0	8.40	2.29
13.0	9.10	2.43
14.0	9.80	2.57
15.0	10.50	2.71
16.0	11.20	2.84
17.0	11.90	2.99
18.0	12.60	3.12

** See Project Special Provisions for minimum RL requirements.

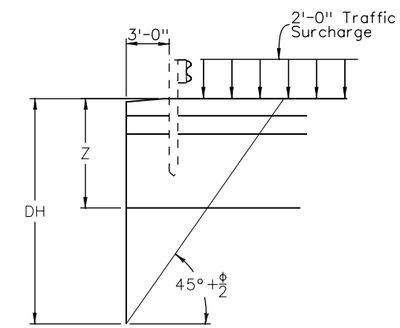

LOADING DIAGRAM
(Used in Analysis)

NOTES

1. See Project Special Provisions for minimum reinforcement lengths.
2. Spacing S in the vertical distance from the center of reinforced fill layers.
3. Graph values must be multiplied by S in feet to obtain the required LTDS per inch of wall.
4. For the installation of an impervious membrane, the reinforcement shall be started 2.67 ft. from the top of wall where the wall is stepped or when the wall height is greater than 10'-0".
5. See sheet W49 for wall panel details.

Quantities			
Quantities By	AML	INITIAL	DATE
Checked By	JAR		01/10

Detail			
Detailed By	DRA	INITIAL	DATE
Checked By	DSO		01/10

Design			
Designed By	JAR	INITIAL	DATE
Checked By	DSO		01/10

Print Date: 1/19/2010
File Name: 14679_Trail_MSE_Wall_Reinf.dgn
Horiz. Scale: 1:1 Vert. Scale: As Noted
Unit Information 0224 Unit Leader Initials MH

WILSON & COMPANY Engineers & Architects
999 18TH STREET, SUITE 2600
DENVER, CO 80202
PHONE: 303-297-2976
FAX: 303-297-2693

Sheet Revisions		
Date:	Comments	Init.

Colorado Department of Transportation
DOT DEPARTMENT OF TRANSPORTATION
8833 South Wadsworth Court
Littleton, CO 80128
Phone: 303-972-9112 FAX: 303-972-9114
Region 6 RLB

As Constructed
No Revisions:
Revised:
Void:

TRAIL - MSE WALL REINFORCEMENT

Designer:	J. Roberts	Structure Numbers	WALL-F-16-EL
Detailer:	D. Anderson		WALL-F-16-EP
Sheet Subset:	WALL	Subset Sheets: W22 of W59	

Project No./Code
ES6 0852-103
17679
Sheet Number 152

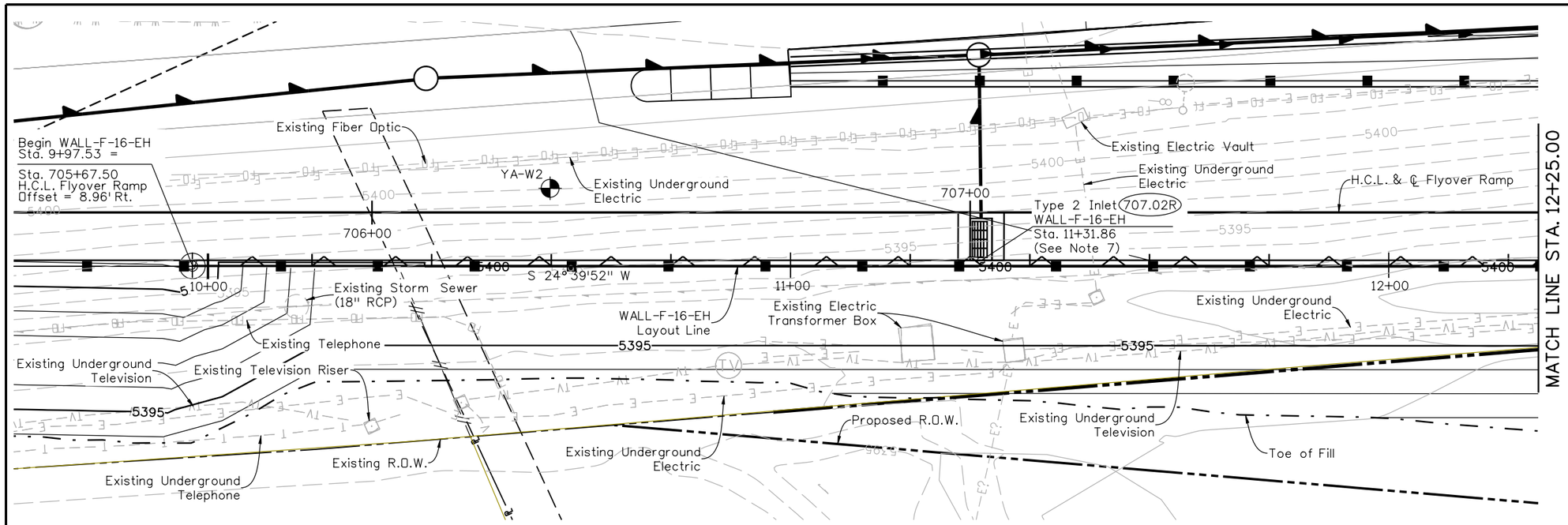

PLAN

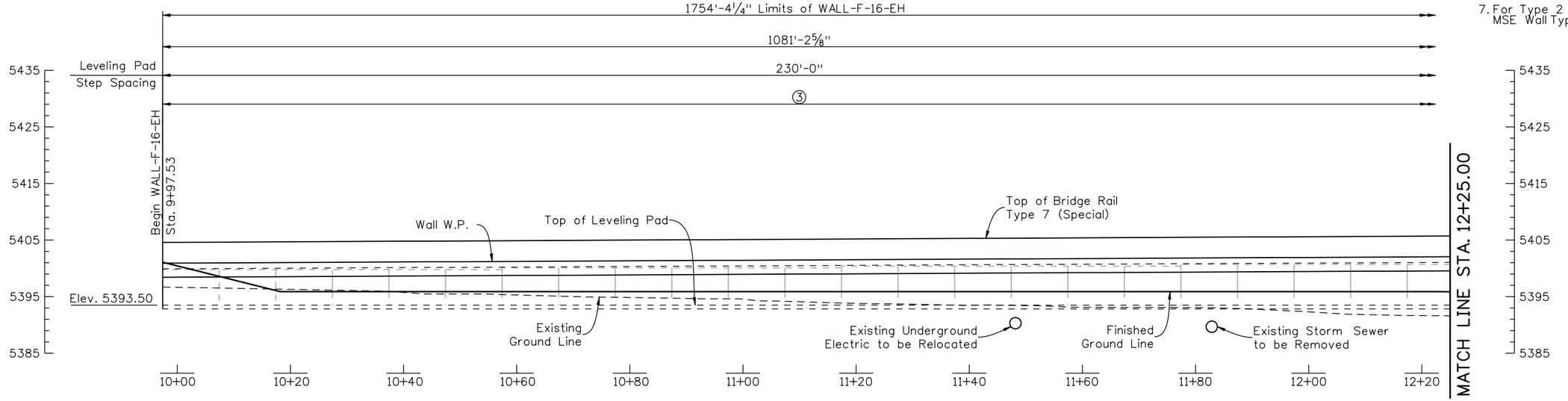

ELEVATION

NOTES:

1. W.P. is to follow P.G.L. of Flyover. Ramp Profile sheet for determining top of wall elevations.
2. For MSE wall details, see MSE Wall Details sheets.
3. For architectural details, see MSE Wall Architecture Details sheets.
4. For bridge rail details, see Bridge Rail Type 7 (Special) details sheets.
5. Leveling pads are level between steps.
6. For relocation or removal of utilities and storm sewer, see Roadway Plans and Drainage Plans.
7. For Type 2 Inlet details, see Roadway-MSE Wall Type 2 Inlet Details sheet.

Design	INITIAL	DATE	Detail	INITIAL	DATE	Quantities	INITIAL	DATE
Designed By	JAR	1C/09	Detailed By	DRA	1C/09	Quantities By	JAR	1C/09
Checked By	DSU	1C/09	Checked By	TWP	11/09	Checked By	DSU	1C/09

DAnderson 11:56:30 AM M:\TRN\07-100-311-12\14679\Bridge\Drawings\Walls\WallF16-EH\14679EH_MSEWallLay_01.dgn

Print Date: 1/19/2010			
File Name: 14679EH_MSEWallLay_01.dgn			
Horiz. Scale: 20	Vert. Scale: 10		
Unit Information 0224	Unit Leader Initials MH		

WILSON & COMPANY Engineers & Architects
999 18TH STREET, SUITE 2800
DENVER, CO 80202
PHONE: 303-297-2976
FAX: 303-297-2983

Sheet Revisions		
Date:	Comments	Init.

Colorado Department of Transportation
DOT DEPARTMENT OF TRANSPORTATION
8833 South Wadsworth Court
Littleton, CO 80128
Phone: 303-972-9112 FAX: 303-972-9114
Region 6 RLB

As Constructed
No Revisions:
Revised:
Void:

WALL-F-16-EH
PLAN AND ELEVATION (1 OF 8)

Designer:	J. Roberts	Structure Numbers	WALL-F-16-EH
Detailer:	D. Anderson		
Sheet Subset:	WALL	Subset Sheets: W23 of W59	

Project No./Code
ES6 0852-103
17679
Sheet Number 153

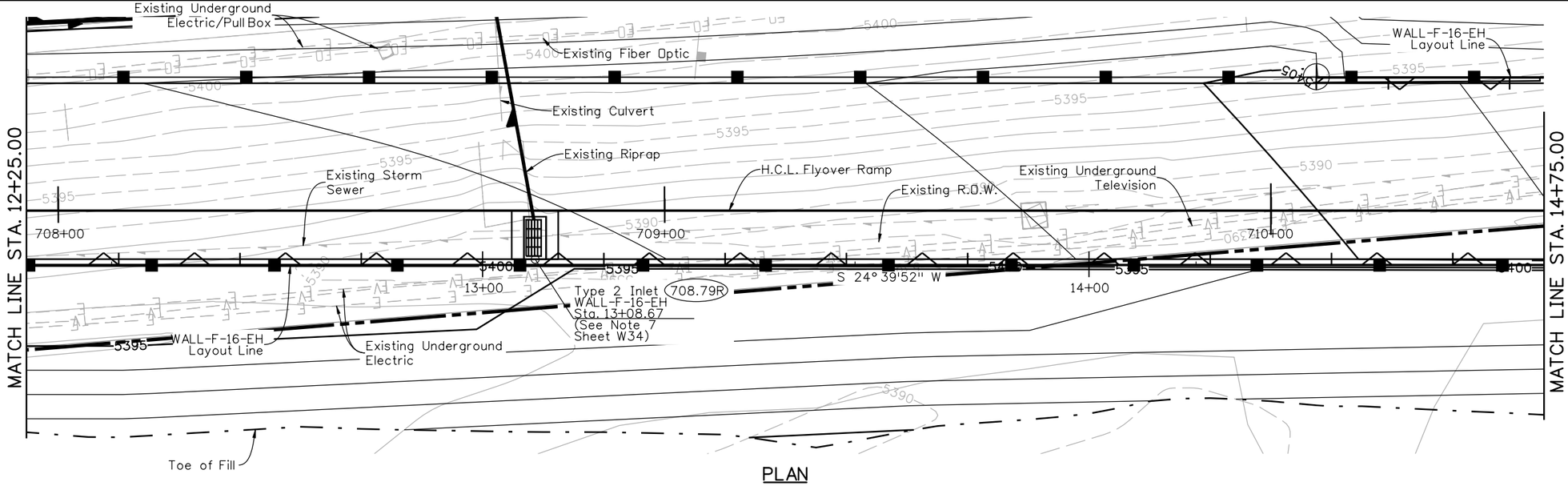

PLAN

NOTES:

1. For architectural details, see MSE Wall Architecture Details sheets.
2. For notes, refer to Wall WALL-F-16-EH Plan and Elevation (1 of 8) Sheet.

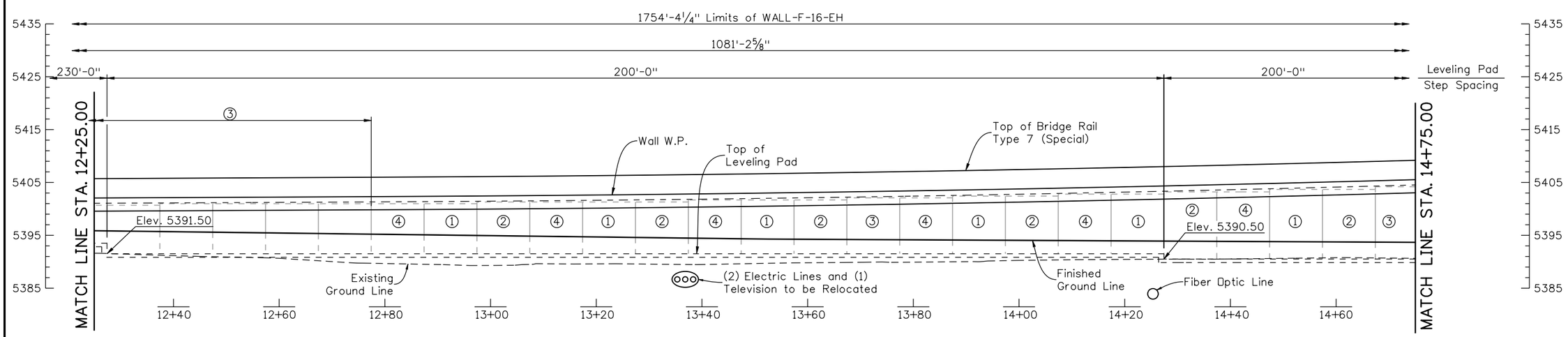

ELEVATION

Design			Detail			Quantities		
	INITIAL	DATE		INITIAL	DATE		INITIAL	DATE
Designed By	JAR	01/10	Detailed By	RGA	01/10	Quantities By	AML	01/10
Checked By	TWM	01/10	Checked By	TWM	01/10	Checked By	JAR	01/10

DAnderson 12:10:24 PM M:\TRN\07-100-311-12\14679\Bridge\Drawings\Walls\WallF16-EH\14679EH_MSEWallLay_02.dgn

Print Date: 1/19/2010			
File Name: 14679EH_MSEWallLay_02.dgn			
Horiz. Scale: 20	Vert. Scale: 10		
Unit Information 0224	Unit Leader Initials MH		

WILSON & COMPANY Engineers & Architects
999 18TH STREET, SUITE 2600
DENVER, CO 80202
PHONE: 303-297-2976
FAX: 303-297-2693

Sheet Revisions

Date:	Comments	Init.

Colorado Department of Transportation
DOT DEPARTMENT OF TRANSPORTATION
8833 South Wadsworth Court
Littleton, CO 80128
Phone: 303-972-9112 FAX: 303-972-9114
Region 6 RLB

As Constructed
No Revisions:
Revised:
Void:

WALL-F-16-EH
PLAN AND ELEVATION (2 OF 8)

Designer:	J. Roberts	Structure Numbers	WALL-F-16-EH
Detailer:	R. Artman		
Sheet Subset:	WALL	Subset Sheets: W24 of W59	

Project No./Code
ES6 0852-103
17679
Sheet Number 154

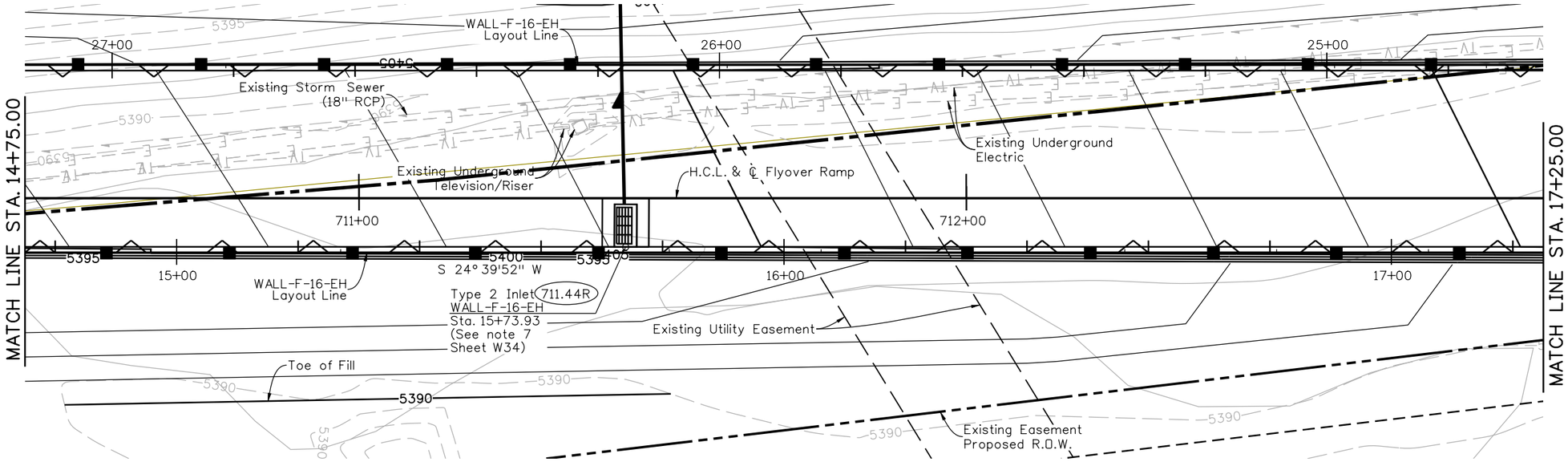

PLAN

NOTES:

1. For architectural details, see MSE Wall Architecture Details sheets.
2. For notes, refer to Wall WALL-F-16-EH Plan and Elevation (1 of 8) Sheet.

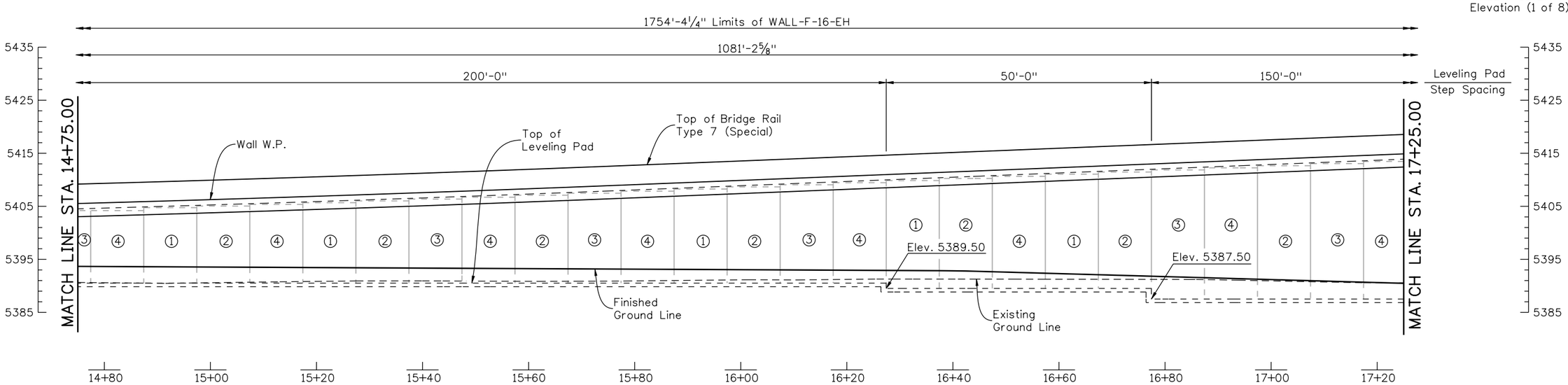

ELEVATION

Quantities		
	INITIAL	DATE
Quantities By	AML	01/10
Checked By	JAR	01/10

Detail		
	INITIAL	DATE
Detailed By	RGA	01/10
Checked By	TWM	01/10

Design		
	INITIAL	DATE
Designed By	JAR	01/10
Checked By	TWM	01/10

DAnderson 12:11:05 PM M:\TRN\07-100-311-12\14679\Bridge\Drawings\Walls\WallF16-EH\14679EH_MSEWallLay_03.dgn

Print Date: 1/19/2010
File Name: 14679EH_MSEWallLay_03.dgn
Horiz. Scale: 20 Vert. Scale: 10
Unit Information 0224 Unit Leader Initials MH

WILSON & COMPANY Engineers & Architects
999 18TH STREET, SUITE 2600
DENVER, CO 80202
PHONE: 303-297-2976
FAX: 303-297-2693

Sheet Revisions		
Date:	Comments	Init.

Colorado Department of Transportation
DOT
DEPARTMENT OF TRANSPORTATION
8833 South Wadsworth Court
Littleton, CO 80128
Phone: 303-972-9112 FAX: 303-972-9114
Region 6 RLB

As Constructed
No Revisions:
Revised:
Void:

WALL-F-16-EH
PLAN AND ELEVATION (3 OF 8)

Designer:	J. Roberts	Structure Numbers	WALL-F-16-EH
Detailer:	R. Artman		
Sheet Subset:	WALL	Subset Sheets: W25 of W59	

Project No./Code
ES6 0852-103
17679
Sheet Number 155

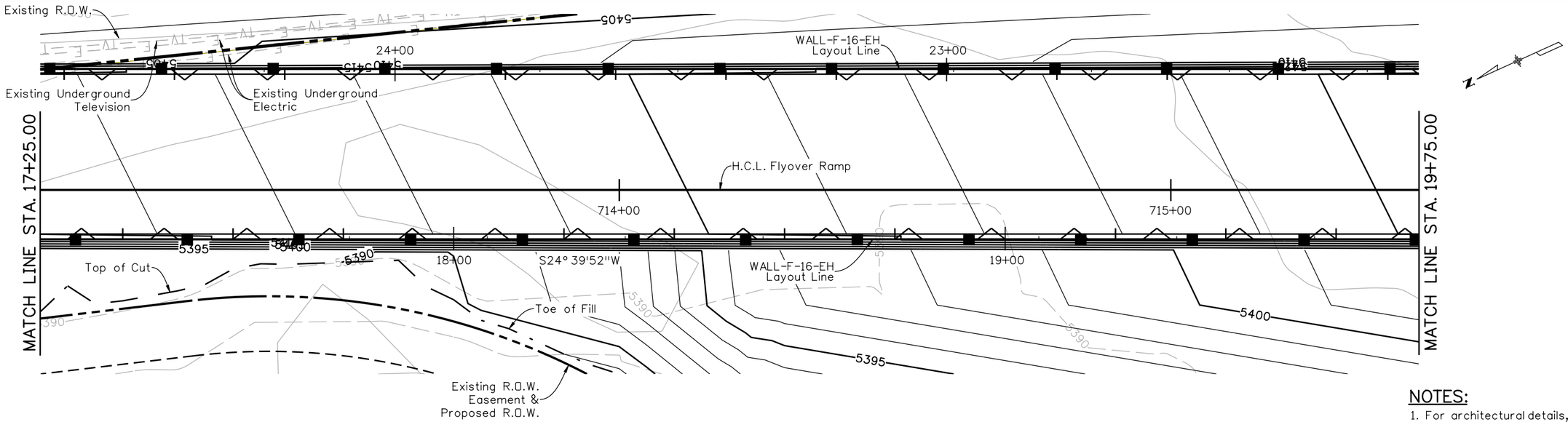

PLAN

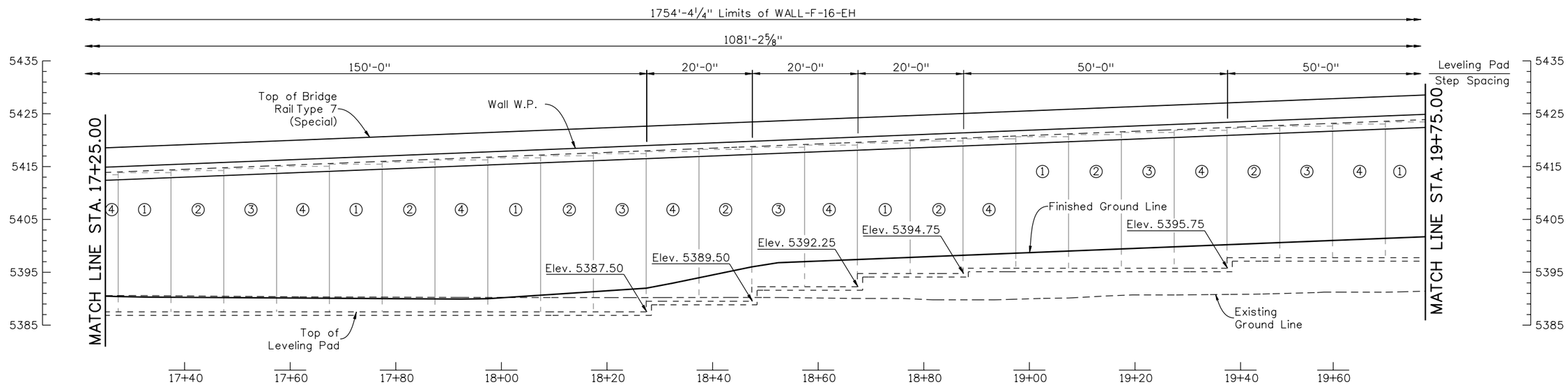

ELEVATION

NOTES:

1. For architectural details, see MSE Wall Architecture Details sheets.
2. For notes, refer to Wall WALL-F-16-EH Plan and Elevation (1 of 8) Sheet.

Quantities			
	INITIAL	DATE	
Quantities By	AML	01/10	
Checked By	JAR	01/10	

Detail			
	INITIAL	DATE	
Detailed By	RGA	01/10	
Checked By	TWM	01/10	

Design			
	INITIAL	DATE	
Designed By	JAR	01/10	
Checked By	TWM	01/10	

DAnderson 12:11:37 PM M:\TRN\07-100-311-12\14679\Bridge\Drawings\Walls\WallF16-EH\14679EH_MSEWallLay_04.dgn

Print Date: 1/19/2010
File Name: 14679EH_MSEWallLay_04.dgn
Horiz. Scale: 20 Vert. Scale: 10
Unit Information 0224 Unit Leader Initials MH

WILSON & COMPANY Engineers & Architects
999 18TH STREET, SUITE 2600
DENVER, CO 80202
PHONE: 303-297-2976
FAX: 303-297-2693

Sheet Revisions		
Date:	Comments	Init.

Colorado Department of Transportation
DOT DEPARTMENT OF TRANSPORTATION
8833 South Wadsworth Court
Littleton, CO 80128
Phone: 303-972-9112 FAX: 303-972-9114
Region 6 RLB

As Constructed
No Revisions:
Revised:
Void:

WALL-F-16-EH
PLAN AND ELEVATION (4 OF 8)

Designer:	J. Roberts	Structure Numbers	WALL-F-16-EH
Detailer:	R. Artman		
Sheet Subset:	WALL	Subset Sheets: W26 of W59	

Project No./Code
ES6 0852-103
17679
Sheet Number 156

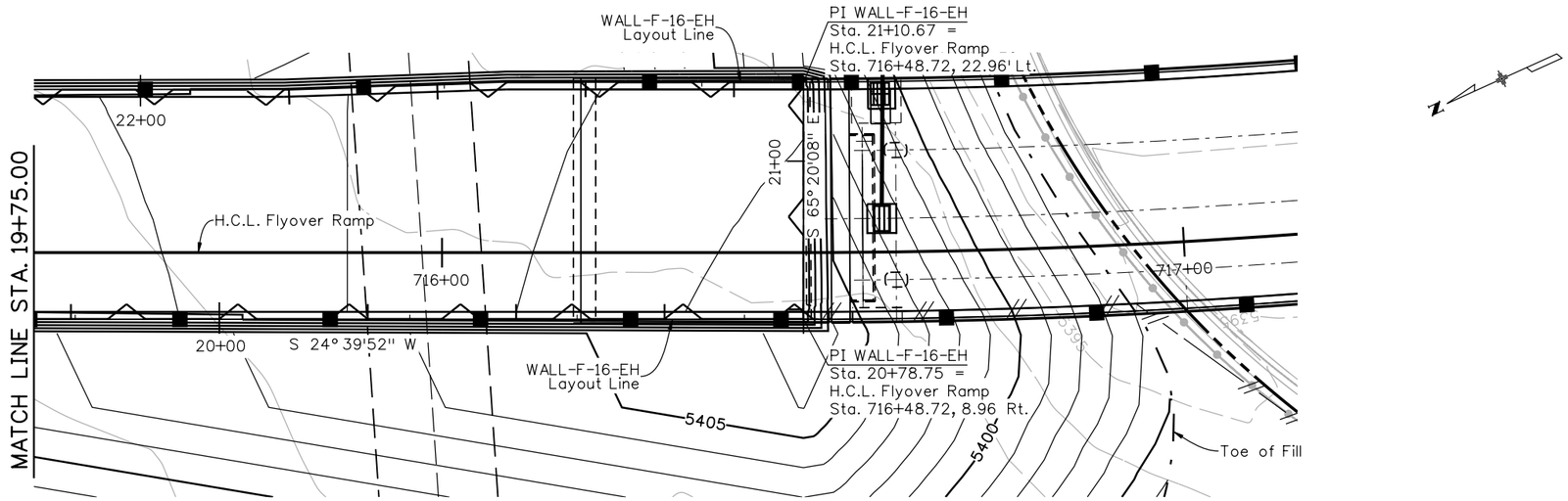

PLAN

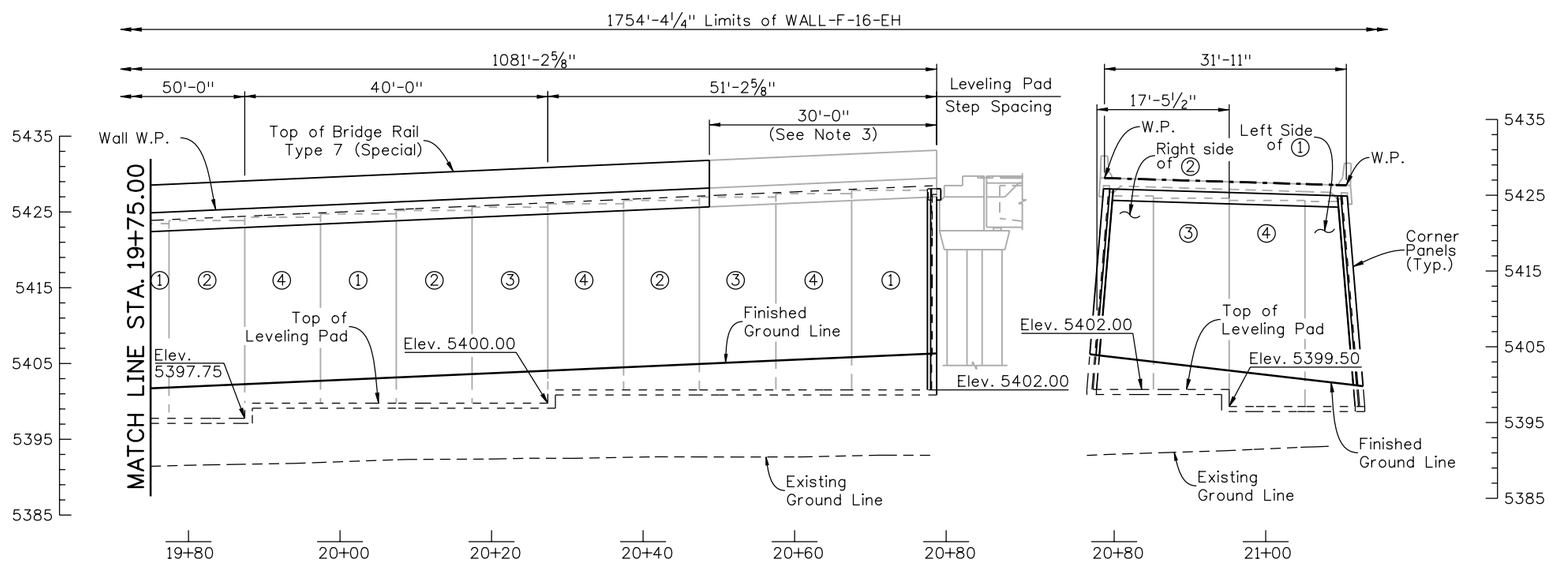

ELEVATION

NOTES:

1. For architectural details, see MSE Wall Architecture Details sheets.
2. For notes, refer to Wall WALL-F-16-EH Plan and Elevation (1 of 8) Sheet.
3. Refer to Structure F-16-YE plans for Approach Slab and Bridge Rail Type 7 (Special) details.

Quantities			
Quantities By	AML	INITIAL	01/10
Checked By	JAR	DATE	01/10

Detail			
Detailed By	RGA	INITIAL	01/10
Checked By	TWM	DATE	01/10

Design			
Designed By	JAR	INITIAL	01/10
Checked By	TWM	DATE	01/10

DAnderson 12:12:54 PM M:\TRN\07-100-311-12\14679\Bridge\Drawings\Walls\WallF16-EH\14679EH_MSEWallLay_05.dgn

Print Date: 1/19/2010
File Name: 14679EH_MSEWallLay_05.dgn
Horiz. Scale: 20 Vert. Scale: 10
Unit Information 0224 Unit Leader Initials MH

WILSON & COMPANY Engineers & Architects
999 18TH STREET, SUITE 2600
DENVER, CO 80202
PHONE: 303-297-2976
FAX: 303-297-2693

Sheet Revisions		
Date:	Comments	Init.

Colorado Department of Transportation
DOT DEPARTMENT OF TRANSPORTATION
8833 South Wadsworth Court
Littleton, CO 80128
Phone: 303-972-9112 FAX: 303-972-9114
Region 6 RLB

As Constructed
No Revisions:
Revised:
Void:

WALL-F-16-EH
PLAN AND ELEVATION (5 OF 8)

Designer:	J. Roberts	Structure Numbers	WALL-F-16-EH
Detailer:	R. Artman		
Sheet Subset:	WALL	Subset Sheets: W27 of W59	

Project No./Code
ES6 0852-103
17679
Sheet Number 157

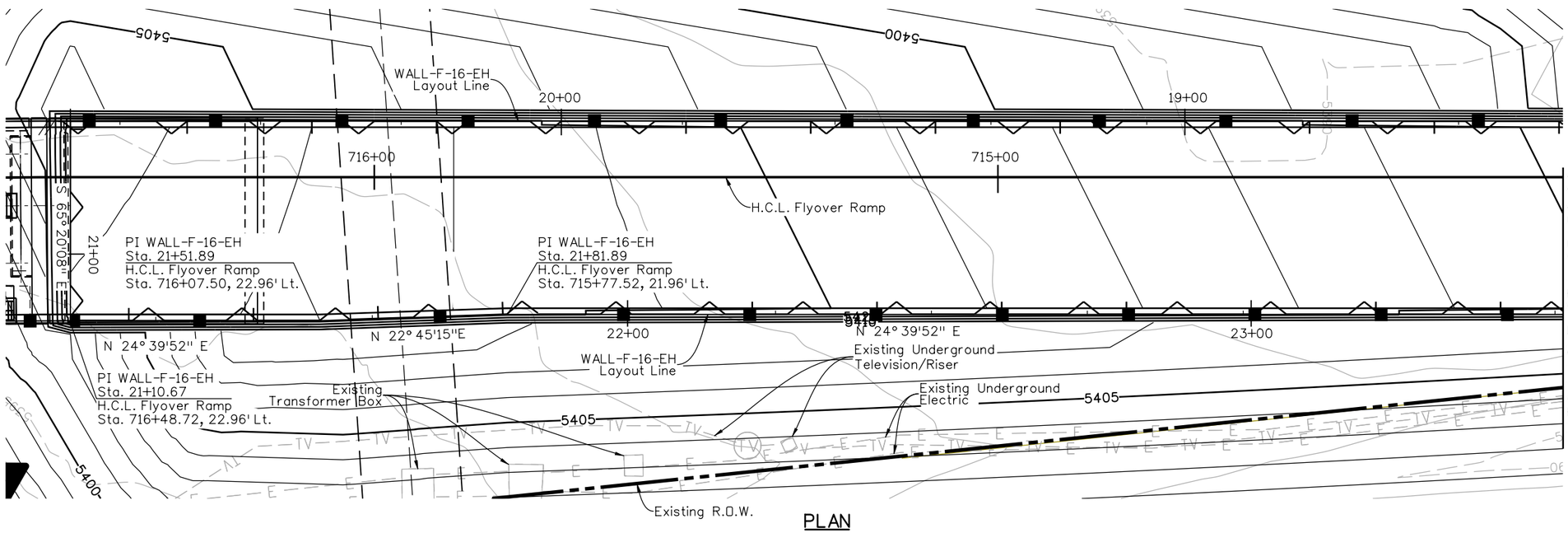

PLAN

NOTES:

1. For architectural details, see MSE Wall Architecture Details sheets.
2. For notes, refer to Wall WALL-F-16-EH Plan and Elevation (1 of 8) Sheet.
3. Refer to Structure F-16-YE plans for Approach Slab and Bridge Rail Type 7 (Special) details.

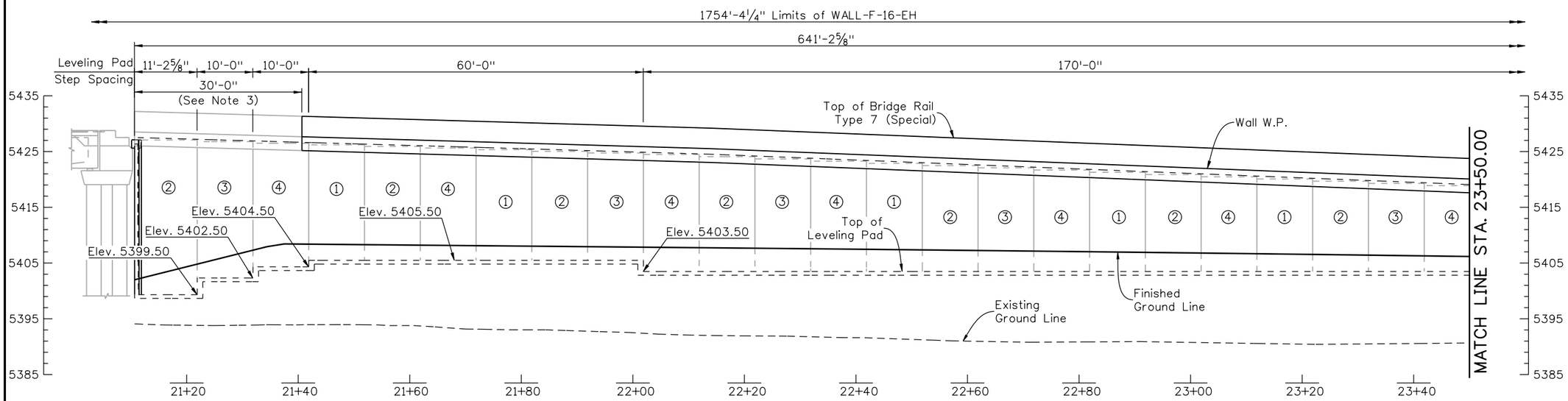

ELEVATION

Quantities	INITIAL	DATE
Quantities By	AML	01/10
Checked By	JAR	01/10

Detail	INITIAL	DATE
Detailed By	RGA	01/10
Checked By	TWM	01/10

Design	INITIAL	DATE
Designed By	JAR	01/10
Checked By	TWM	01/10

DAnderson 12:13:59 PM M:\TRN\07-100-311-12\14679\Bridge\Drawings\Walls\WallF16-EH\14679EH_MSEWallLay_06.dgn

Print Date: 1/19/2010
File Name: 14679EH_MSEWallLay_06.dgn
Horiz. Scale: 20 Vert. Scale: 10
Unit Information 0224 Unit Leader Initials MH

WILSON & COMPANY Engineers & Architects
999 18TH STREET, SUITE 2600
DENVER, CO 80202
PHONE: 303-297-2976
FAX: 303-297-2693

Sheet Revisions		
Date:	Comments	Init.

Colorado Department of Transportation
DOT DEPARTMENT OF TRANSPORTATION
8833 South Wadsworth Court
Littleton, CO 80128
Phone: 303-972-9112 FAX: 303-972-9114
Region 6 RLB

As Constructed
No Revisions:
Revised:
Void:

WALL-F-16-EH
PLAN AND ELEVATION (6 OF 8)

Designer:	J. Roberts	Structure Numbers	WALL-F-16-EH
Detailer:	R. Artman		
Sheet Subset:	WALL	Subset Sheets: W28 of W59	

Project No./Code
ES6 0852-103
17679
Sheet Number 158

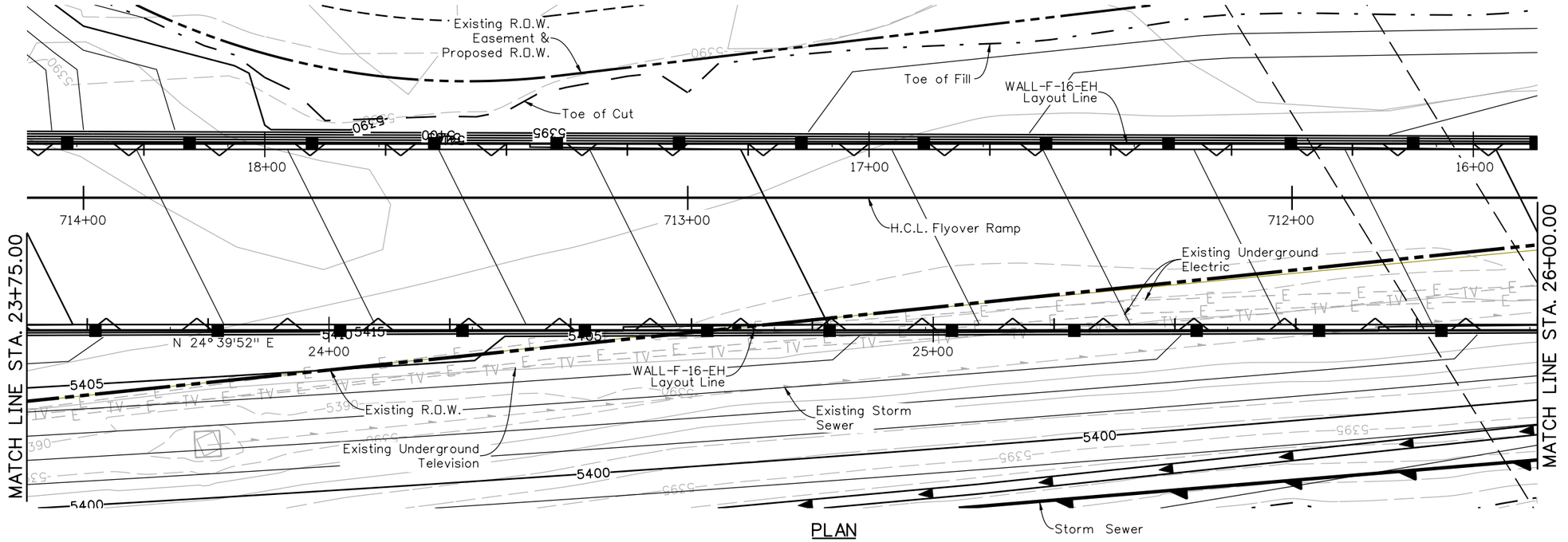

PLAN

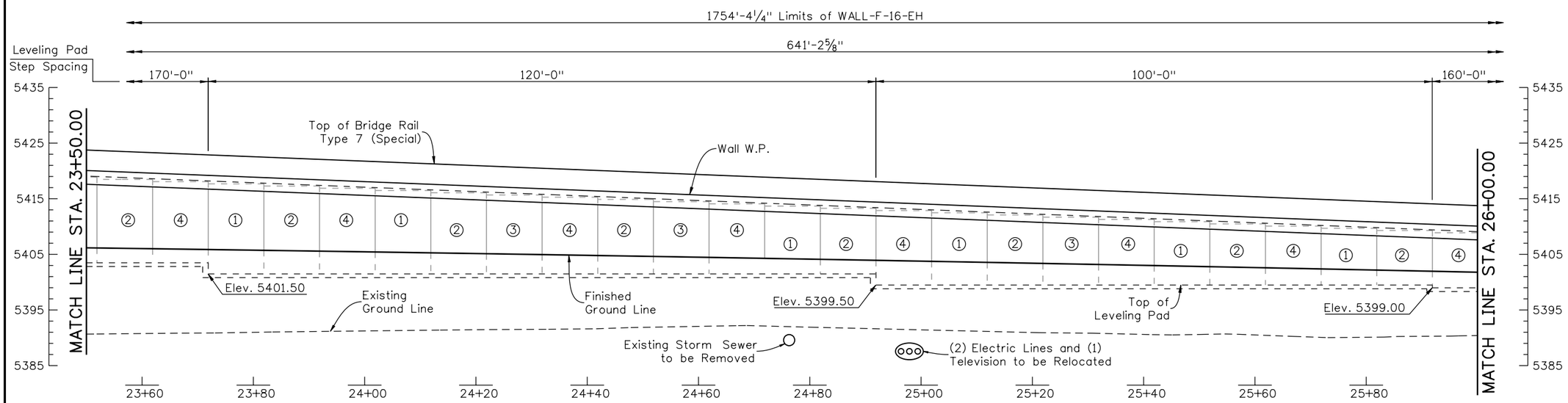

ELEVATION

NOTES:

1. For architectural details, see MSE Wall Architecture Details sheets.
2. For notes, refer to Wall WALL-F-16-EH Plan and Elevation (1 of 8) Sheet.

Design			Detail			Quantities		
	INITIAL	DATE		INITIAL	DATE		INITIAL	DATE
Designed By	JAR	01/10	Detailed By	RGA	01/10	Quantities By	AML	01/10
Checked By	TWM	01/10	Checked By	TWM	01/10	Checked By	JAR	01/10

Print Date: 1/19/2010
File Name: 14679EH_MSEWallLay_07.dgn
Horiz. Scale: 20 Vert. Scale: 10
Unit Information 0224 Unit Leader Initials MH

WILSON & COMPANY Engineers & Architects
999 18TH STREET, SUITE 2600
DENVER, CO 80202
PHONE: 303-297-2976
FAX: 303-297-2693

Sheet Revisions		
Date:	Comments	Init.

Colorado Department of Transportation
DOT
DEPARTMENT OF TRANSPORTATION
8833 South Wadsworth Court
Littleton, CO 80128
Phone: 303-972-9112 FAX: 303-972-9114
Region 6 RLB

As Constructed
No Revisions:
Revised:
Void:

WALL-F-16-EH
PLAN AND ELEVATION (7 OF 8)

Designer:	J. Roberts	Structure Numbers	WALL-F-16-EH
Detailer:	R. Artman		
Sheet Subset:	WALL	Subset Sheets: W29 of W59	

Project No./Code
ES6 0852-103
17679
Sheet Number 159

D:Anderson 12:14:38 PM M:\TRN\07-100-311-12\14679\Bridge\Drawings\Walls\WallF16-EH\14679EH_MSEWallLay_07.dgn

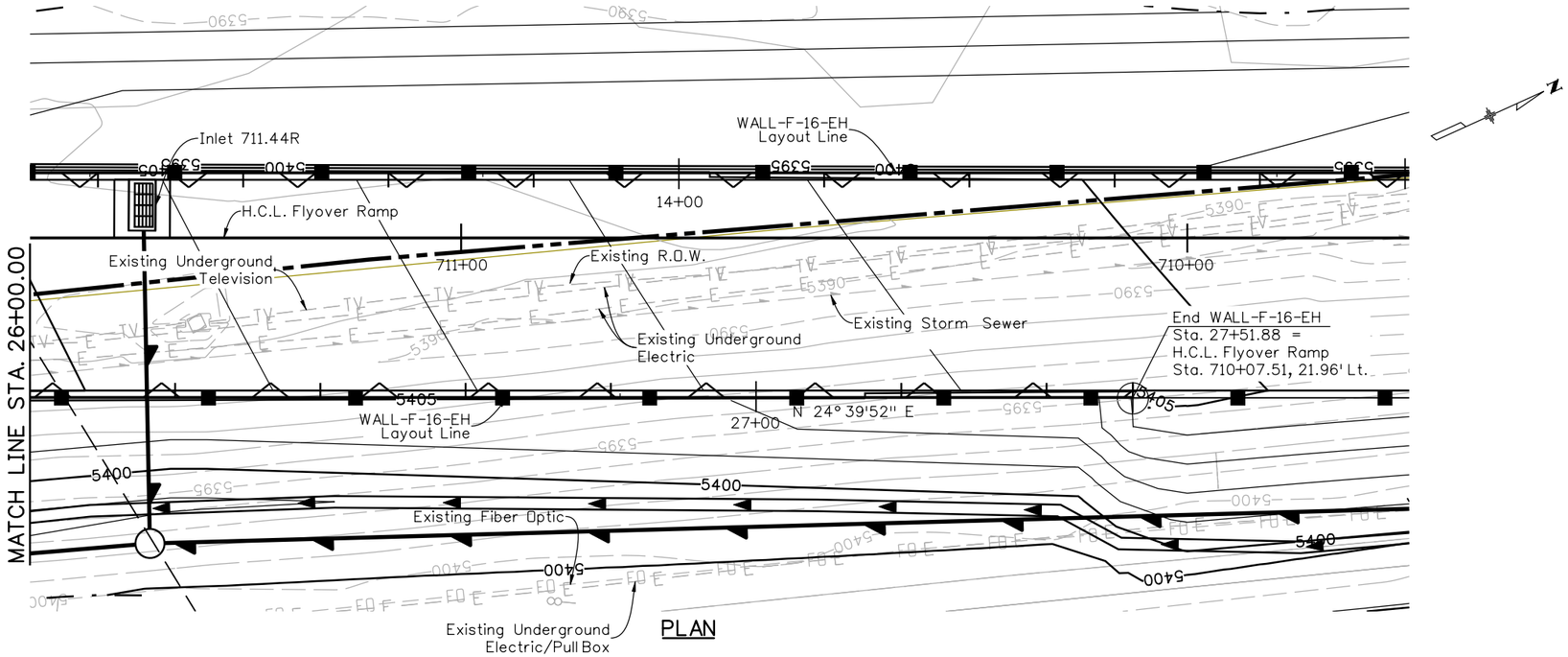

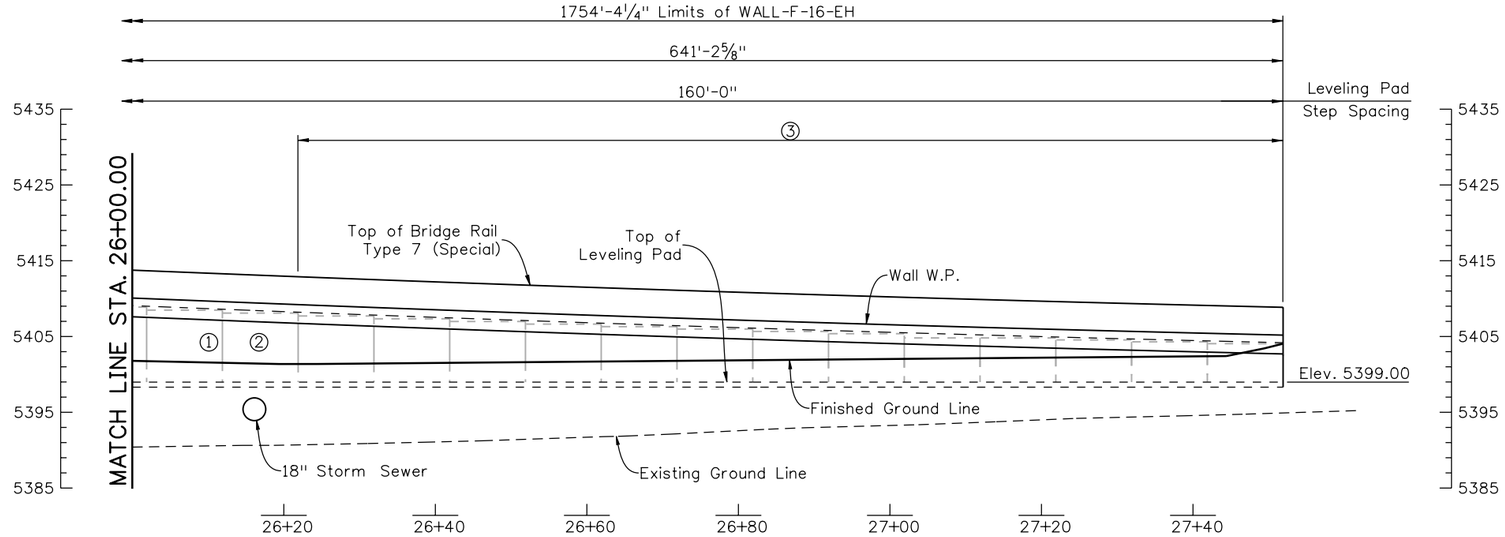

ELEVATION

NOTES:

1. For architectural details, see MSE Wall Architecture Details sheets.
2. For notes, refer to WALL-F-16-EH Plan and Elevation (1 of 8) Sheet.

Design			Detail			Quantities		
	INITIAL	DATE		INITIAL	DATE		INITIAL	DATE
Designed By	JAR	01/10	Detailed By	RGA	01/10	Quantities By	AML	01/10
Checked By	TWM	01/10	Checked By	TWM	01/10	Checked By	JAR	01/10

DAnderson 12:19:09 PM M:\TRN\07-100-311-12\14679\Bridge\Drawings\Walls\Wall F16-EH\14679EH_MSEWallLay_08.dgn

Print Date: 1/19/2010	Sheet Revisions	Colorado Department of Transportation	As Constructed
File Name: 14679EH_MSEWallLay_08.dgn	Date: / Comments / Init.	8833 South Wadsworth Court Littleton, CO 80128 Phone: 303-972-9112 FAX: 303-972-9114	No Revisions:
Horiz. Scale: 20 Vert. Scale: 10		Region 6 RLB	Revised:
Unit Information 0224 Unit Leader Initials MH			Void:
WILSON & COMPANY Engineers & Architects 999 18TH STREET, SUITE 2600 DENVER, CO 80202 PHONE: 303-297-2976 FAX: 303-297-2693			

WALL-F-16-EH PLAN AND ELEVATION (8 OF 8)				Project No./Code
Designer:	J. Roberts	Structure Numbers	WALL-F-16-EH	ES6 0852-103
Detailer:	R. Artman			17679
Sheet Subset:	WALL	Subset Sheets: W30 of W59		Sheet Number 160

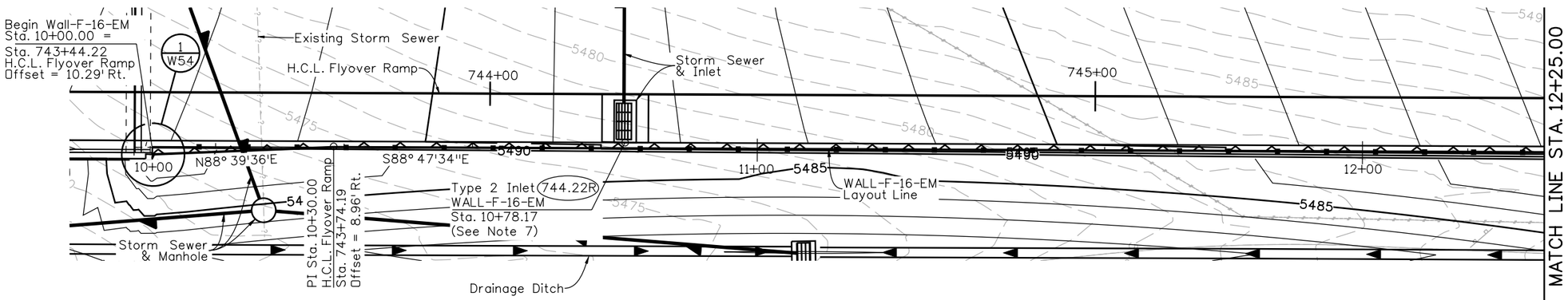

PLAN

N

NOTES:

1. W.P. is to follow P.G.L. of Flyover. Ramp Profile sheet for determining top of wall elevations.
2. For MSE wall details, see MSE Wall Details sheets.
3. For architectural details, see MSE Wall Architecture Details sheets.
4. For bridge rail details, see Bridge Rail Type 7 (Special) details sheets.
5. Leveling pads are level between steps.
6. For relocation or removal of utilities and storm sewer, see Roadway Plans and Drainage Plans.
7. For Type 2 Inlet details, see Roadway-MSE Wall Type 2 Inlet Details sheet.

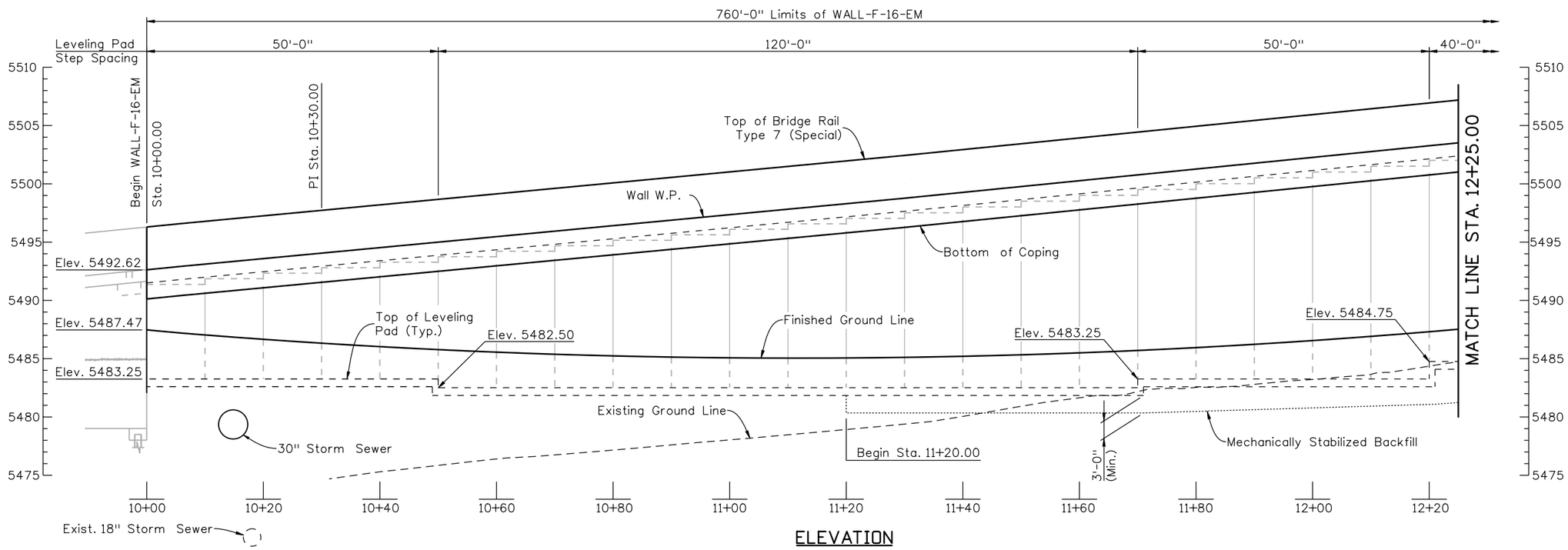

ELEVATION

Design			Detail			Quantities		
	INITIAL	DATE		INITIAL	DATE		INITIAL	DATE
Designed By	JAR	01/10	Detailed By	RGA	01/10	Quantities By	DSD	01/10
Checked By	TWM	01/10	Checked By	TWM	01/10	Checked By	AML	01/10

DAnderson 12:19:41 PM M:\TRN\07-100-311-12\14679\Bridge\Drawings\Walls\Wall F-16-EM\14679EM_MSEWallLay_01.dgn

Print Date: 1/19/2010
File Name: 14679EM_MSEWallLay_01.dgn
Horiz. Scale: 20 Vert. Scale: 10
Unit Information 0224 Unit Leader Initials MH

WILSON & COMPANY Engineers & Architects
999 18TH STREET, SUITE 2600
DENVER, CO 80202
PHONE: 303-297-2976
FAX: 303-297-2693

Sheet Revisions		
Date:	Comments	Init.

Colorado Department of Transportation
DOT DEPARTMENT OF TRANSPORTATION
8833 South Wadsworth Court
Littleton, CO 80128
Phone: 303-972-9112 FAX: 303-972-9114
Region 6 RLB

As Constructed
No Revisions:
Revised:
Void:

WALL-F-16-EM
PLAN AND ELEVATION (1 OF 4)

Designer:	J. Roberts	Structure Numbers	WALL-F-16-EM
Detailer:	R. Artman		
Sheet Subset:	WALL	Subset Sheets:	W31 of W59

Project No./Code
ES6 0852-103
17679
Sheet Number 161

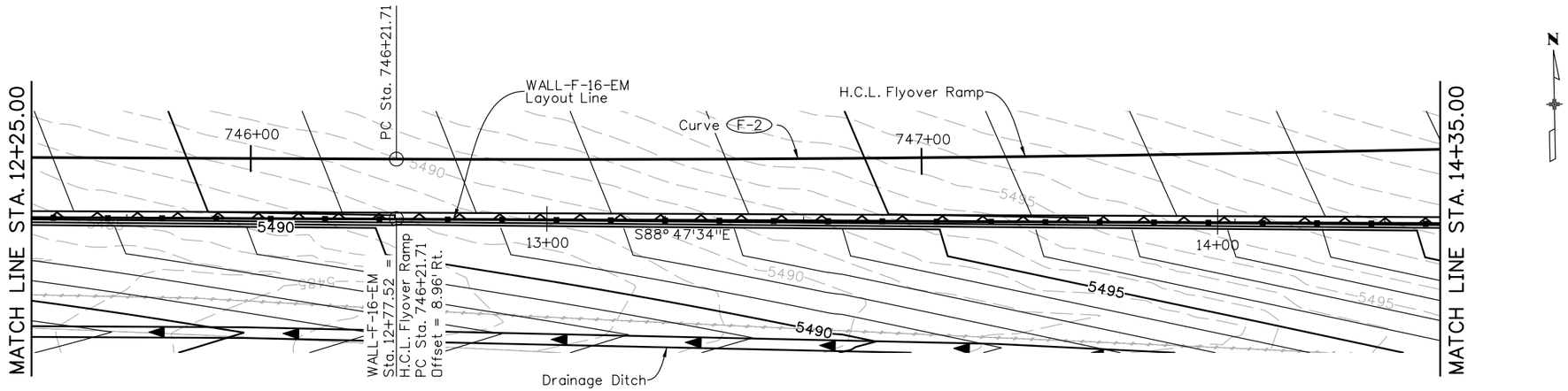

PLAN

FLYOVER RAMP CURVE DATA

Curve F-2
Δ = 03° 15'42" Lt.
D = 01° 00'19"
T = 162.29'
L = 324.48'
R = 5700.00'

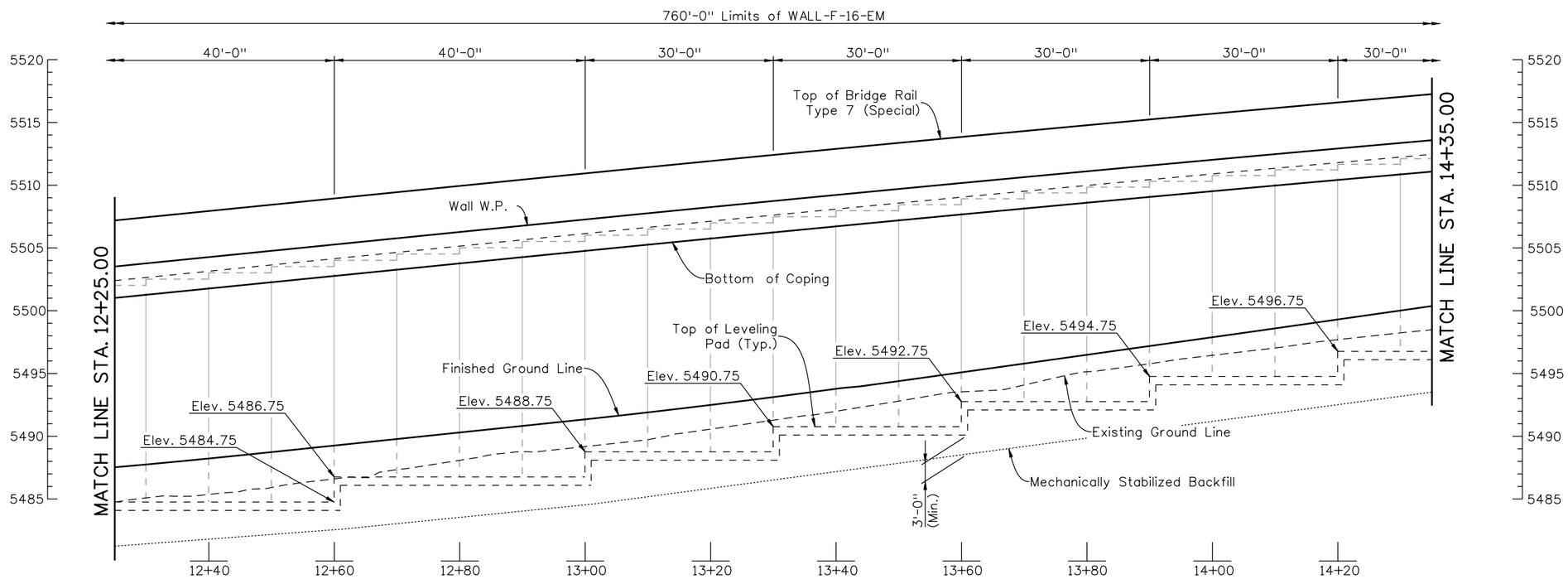

ELEVATION

NOTE:

For notes, see WALL-F-16-EM Plan and Elevation (1 of 4) sheet.

Design			Detail			Quantities		
	INITIAL	DATE		INITIAL	DATE		INITIAL	DATE
Designed By	JAR	01/10	Detailed By	DRA	01/10	Quantities By	DSD	01/10
Checked By	TWM	01/10	Checked By	TWM	01/10	Checked By	AML	01/10

DAnderson 12:20:08 PM M:\TRN\07-100-311-12\14679\Bridge\Drawings\Walls\WallF-16-EM\14679EM_MSEWallLay_02.dgn

Print Date: 1/19/2010	
File Name: 14679EM_MSEWallLay_02.dgn	
Horiz. Scale: 20	Vert. Scale: 10
Unit Information 0224	Unit Leader Initials MH

WILSON & COMPANY Engineers & Architects
999 18TH STREET, SUITE 2600
DENVER, CO 80202
PHONE: 303-297-2976
FAX: 303-297-2693

Sheet Revisions

Date:	Comments	Init.

Colorado Department of Transportation
DOT DEPARTMENT OF TRANSPORTATION
8833 South Wadsworth Court
Littleton, CO 80128
Phone: 303-972-9112 FAX: 303-972-9114
Region 6 RLB

As Constructed
No Revisions:
Revised:
Void:

WALL-F-16-EM
PLAN AND ELEVATION (2 OF 4)

Designer:	J. Roberts	Structure Numbers	WALL-F-16-EM
Detailer:	R. Artman		
Sheet Subset:	WALL	Subset Sheets: W32 of W59	

Project No./Code
ES6 0852-103
17679
Sheet Number 162

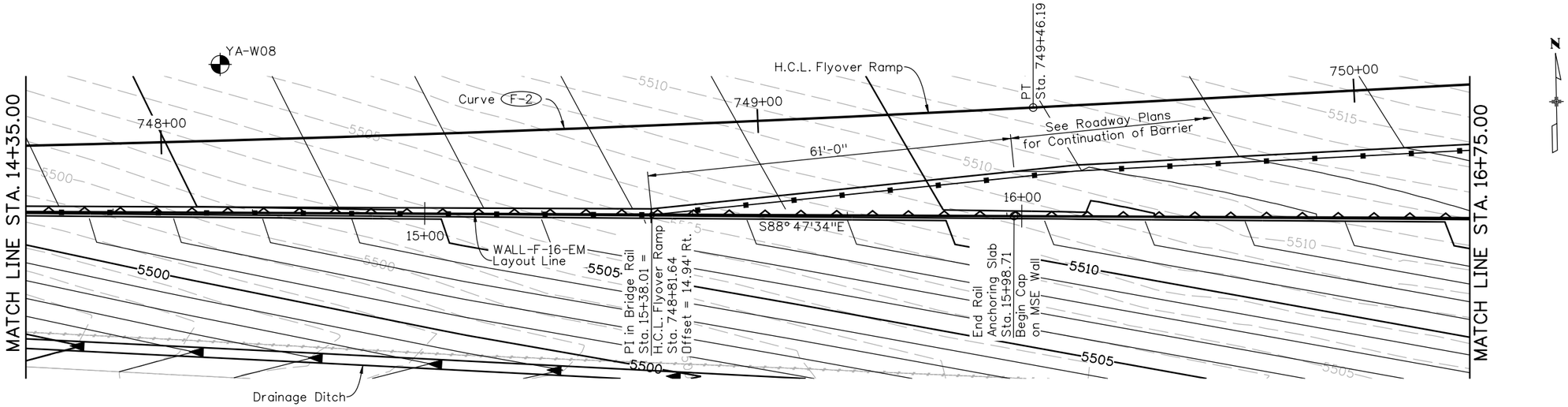

PLAN

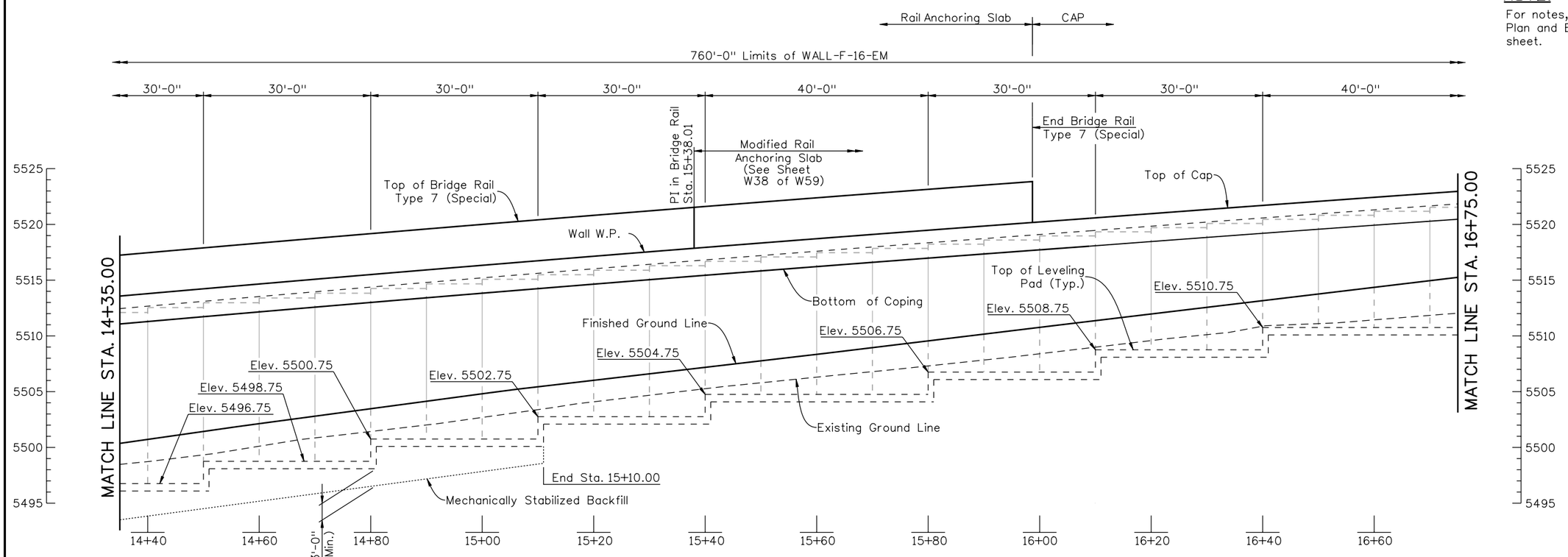

ELEVATION

NOTE:

For notes, see WALL-F-16-EM Plan and Elevation (1 of 4) sheet.

Design			Detail			Quantities		
	INITIAL	DATE		INITIAL	DATE		INITIAL	DATE
Designed By	JAR	01/10	Detailed By	DRA	01/10	Quantities By	DSO	01/10
Checked By	TWM	01/10	Checked By	TWM	01/10	Checked By	AML	01/10

DAnderson 12:21:48 PM M:\TRN\07-100-311-12\14679\Bridge\Drawings\Walls\WallF-16-EM\14679EM_MSEWallLay_03.dgn

Print Date: 1/19/2010	
File Name: 14679EM_MSEWallLay_03.dgn	
Horiz. Scale: 20	Vert. Scale: 10
Unit Information 0224	Unit Leader Initials MH

WILSON & COMPANY Engineers & Architects
999 18TH STREET, SUITE 2600
DENVER, CO 80202
PHONE: 303-297-2976
FAX: 303-297-2693

Sheet Revisions		
Date:	Comments	Init.

Colorado Department of Transportation
8833 South Wadsworth Court
Littleton, CO 80128
Phone: 303-972-9112 FAX: 303-972-9114
Region 6 RLB

As Constructed
No Revisions:
Revised:
Void:

WALL-F-16-EM
PLAN AND ELEVATION (3 OF 4)

Designer:	J. Roberts	Structure Numbers	WALL-F-16-EM
Detailer:	R. Artman		
Sheet Subset:	WALL	Subset Sheets: W33 of W59	

Project No./Code
ES6 0852-103
17679
Sheet Number 163

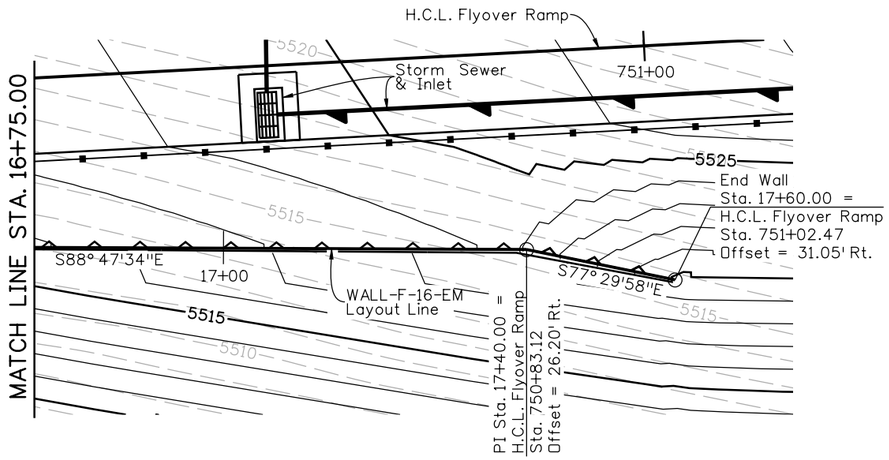

PLAN

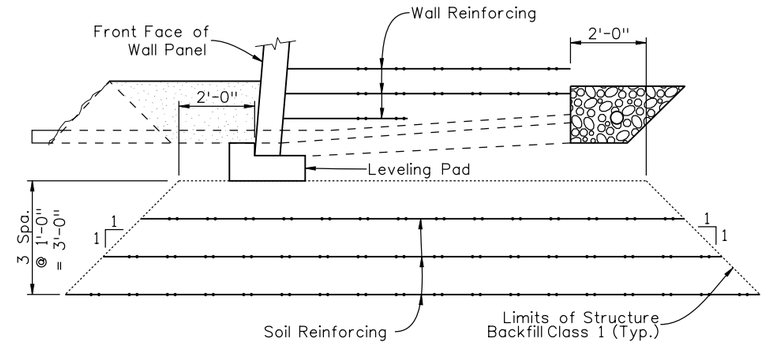

SOIL REINFORCING DETAIL

(Wall Sta. 11+20.00 to 15+10.00)

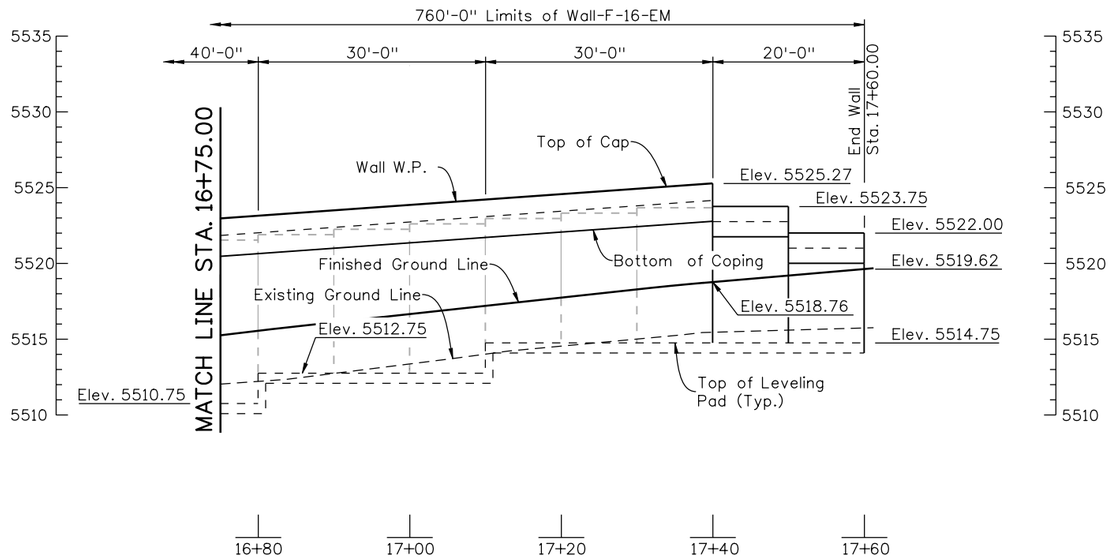

ELEVATION

NOTES:

1. For additional notes, see WALL-F-16-EM Plan and Elevation (1 of 4) sheet.
2. Geotextile reinforcement shall be woven fabric with a Minimum Average Roll Value of 4800 lb/ft for installations with a gap and 2400 lb/ft for installations without a gap based on ASTM D4595.
3. Geotextile Reinforcement shall be placed by alternating Machine Direction (MD) with Cross Machine Direction (XD) from layer to layer.
4. Minimum splice of all Geofabric shall consist of 6" of overlap.
5. Payment will be made under item 206 Mechanical Reinforcement of Soil (cu.yd.) and item 206 Structure Backfill (Class 1) (cu.yd.) and Shall include the cost for 6 inch Perforated Pipe underdrain and Subsurface Drain Outlet (6"Ø Non-Perforated Pipe).

Design			Detail			Quantities		
	INITIAL	DATE		INITIAL	DATE		INITIAL	DATE
Designed By	JAR	01/10	Detailed By	DRA	01/10	Quantities By	DSD	01/10
Checked By	TWM	01/10	Checked By	TWM	01/10	Checked By	AML	01/10

DAnderson 12:22:12 PM M:\TRN\07-100-311-12\14679\Bridge\Drawings\Walls\WallF-16-EM\14679EM_MSEWallLay_04.dgn

Print Date: 1/19/2010
File Name: 14679EM_MSEWallLay_04.dgn
Horiz. Scale: 20 Vert. Scale: 10
Unit Information 0224 Unit Leader Initials MH

WILSON & COMPANY Engineers & Architects
999 18TH STREET, SUITE 2600
DENVER, CO 80202
PHONE: 303-297-2976
FAX: 303-297-2693

Sheet Revisions		
Date:	Comments	Init.

Colorado Department of Transportation
DOT DEPARTMENT OF TRANSPORTATION
8833 South Wadsworth Court
Littleton, CO 80128
Phone: 303-972-9112 FAX: 303-972-9114
Region 6 RLB

As Constructed
No Revisions:
Revised:
Void:

WALL-F-16-EM
PLAN AND ELEVATION (4 OF 4)

Designer:	J. Roberts	Structure Numbers	WALL-F-16-EM
Detailer:	R. Artman		
Sheet Subset:	WALL	Subset Sheets: W34 of W59	

Project No./Code
ES6 0852-103
17679
Sheet Number 164

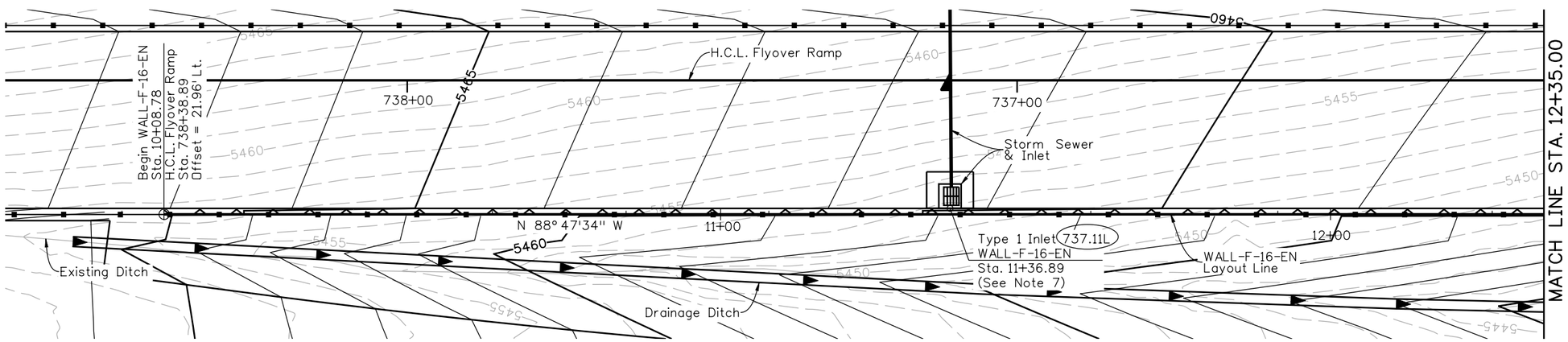

PLAN

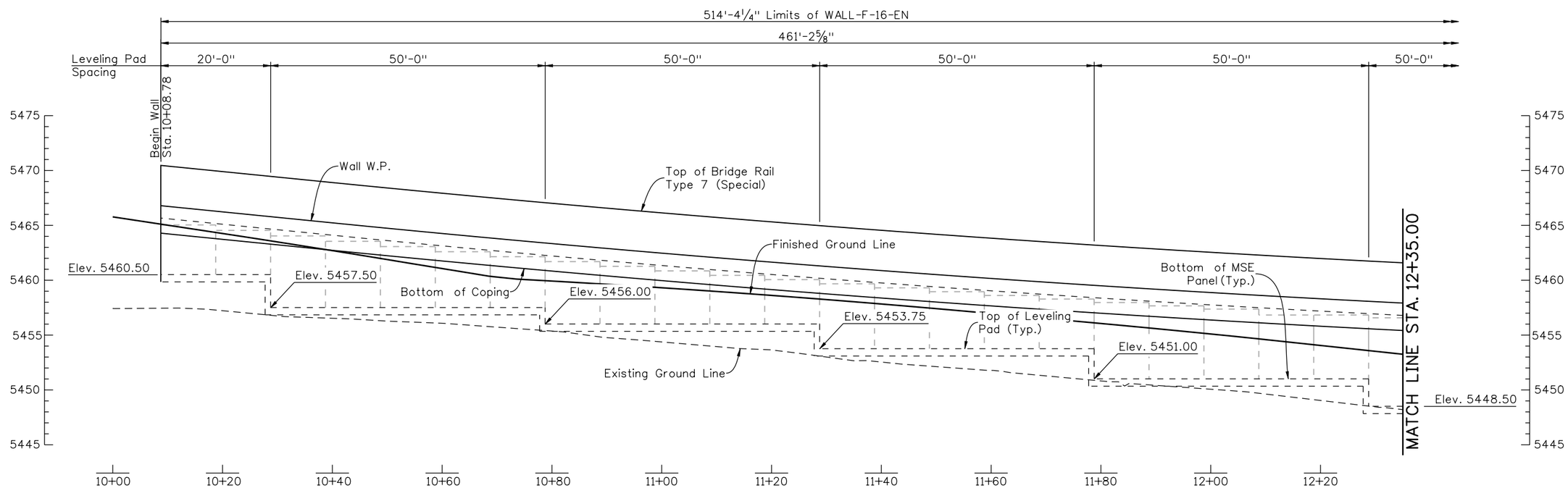

ELEVATION

NOTES:

1. W.P. is to follow P.G.L. of Flyover. Ramp Profile sheet for determining top of wall elevations.
2. For MSE wall details, see MSE Wall Details sheets.
3. For architectural details, see MSE Wall Architecture Details sheets.
4. For bridge rail details, see Bridge Rail Type 7 (Special) details sheets.
5. Leveling pads are level between steps.
6. For relocation or removal of utilities and storm sewer, see Roadway Plans and Drainage Plans.
7. For Type 1 Inlet details, see Roadway-MSE Wall Type 1 Inlet Details sheet.
8. For Type 3 Inlet details, see Roadway-MSE Wall Type 3 Inlet Details sheet.
9. Refer to Structure F-16-YE Plans for Approach Slab and Bridge Rail Type 7 (Special) details.

Design			Detail			Quantities		
	INITIAL	DATE		INITIAL	DATE		INITIAL	DATE
Designed By	JAR	01/10	Detailed By	RGA	01/10	Quantities By	AML	01/10
Checked By	TWM	01/10	Checked By	TWM	01/10	Checked By	JAR	01/10

DAnderson 12:23:48 PM M:\TRN\07-100-311-12\14679\Bridge\Drawings\Walls\Wall F-16-EN\14679EN_MSEWallLay_01.dgn

Print Date: 1/19/2010
File Name: 14679EN_MSEWallLay_01.dgn
Horiz. Scale: 20 Vert. Scale: 10
Unit Information 0224 Unit Leader Initials MH

WILSON & COMPANY Engineers & Architects
999 18TH STREET, SUITE 2600
DENVER, CO 80202
PHONE: 303-297-2976
FAX: 303-297-2693

Sheet Revisions		
Date:	Comments	Init.

Colorado Department of Transportation
DOT DEPARTMENT OF TRANSPORTATION
8833 South Wadsworth Court
Littleton, CO 80128
Phone: 303-972-9112 FAX: 303-972-9114
Region 6 RLB

As Constructed
No Revisions:
Revised:
Void:

WALL-F-16-EN
PLAN AND ELEVATION (1 OF 3)

Designer: J. Roberts
Detailer: R. Artman
Sheet Subset: WALL
Structure Numbers: WALL-F-16-EN
Subset Sheets: W35 of W59

Project No./Code
ES6 0852-103
17679
Sheet Number 165

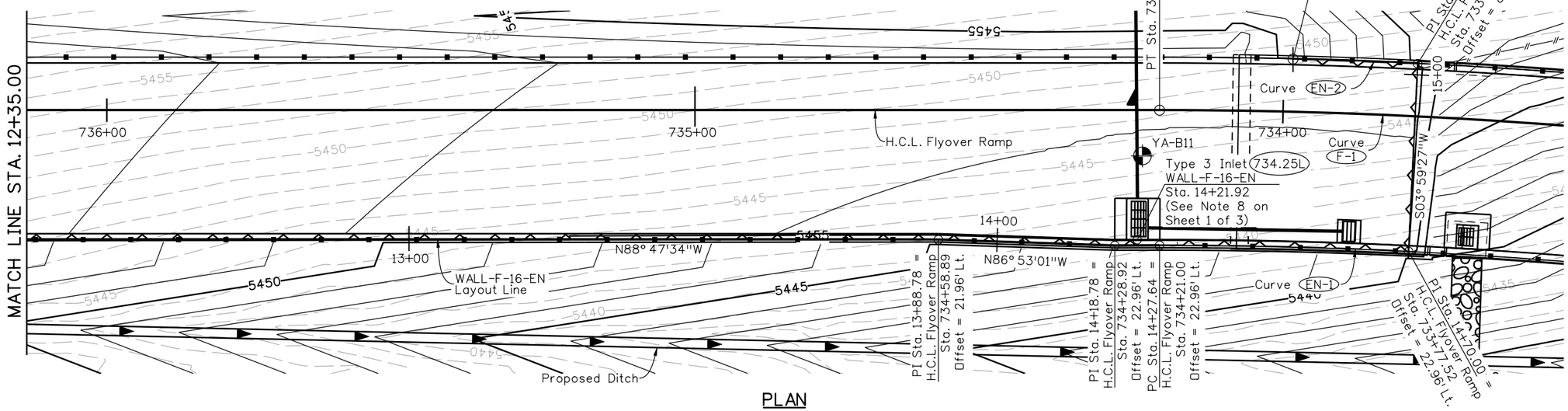

PLAN

FLYOVER RAMP CURVE DATA

Curve F-1
Δ = 113° 27'26" Lt.
D = 01° 00'19"
T = 8686.87'
L = 324.48'
R = 5700.00'

WALL-F-16-EN CURVE DATA

Curve EN-1
Δ = 00° 26'13" Rt.
D = 01° 00'33"
T = 21.65'
L = 42.30'
R = 5677.04'

Curve EN-2
Δ = 00° 12'47" Lt.
D = 01° 00'13"
T = 10.61'
L = 21.22'
R = 5708.96'

NOTE:

For notes, see WALL-F-16-EN Plan and Elevation (1 of 3) sheet.

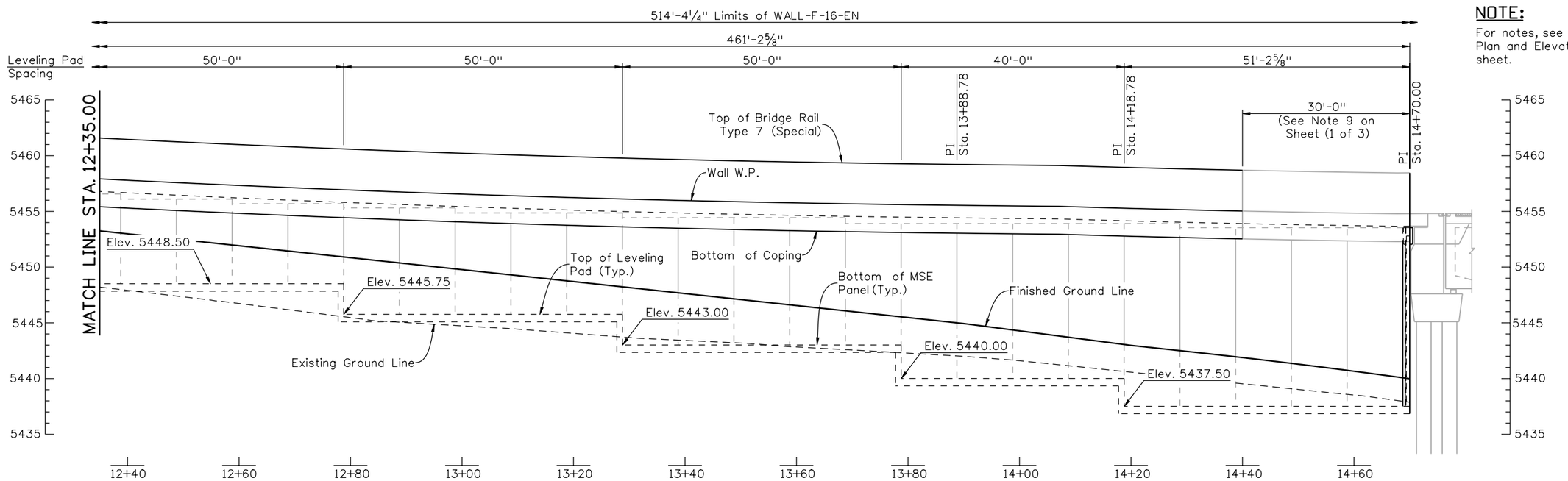

ELEVATION

Design	INITIAL	DATE
Designed By	JAR	01/10
Checked By	TWM	01/10

Detail	INITIAL	DATE
Detailed By	RGA	01/10
Checked By	TWM	01/10

Quantities	INITIAL	DATE
Quantities By	AML	01/10
Checked By	JAR	01/10

D:Anderson 3:58:51 PM M:\TRN\07-100-311-12\14679\Bridge\Drawings\Walls\WallF-16-EN\14679EN_MSEWallLay_02.dgn

Print Date: 1/19/2010
File Name: 14679EN_MSEWallLay_02.dgn
Horiz. Scale: 20 Vert. Scale: 10
Unit Information 0224 Unit Leader Initials MH

WILSON & COMPANY Engineers & Architects
999 18TH STREET, SUITE 2600
DENVER, CO 80202
PHONE: 303-297-2976
FAX: 303-297-2693

Sheet Revisions

Date:	Comments	Init.

Colorado Department of Transportation
DOT DEPARTMENT OF TRANSPORTATION
8833 South Wadsworth Court
Littleton, CO 80128
Phone: 303-972-9112 FAX: 303-972-9114
Region 6 RLB

As Constructed
No Revisions:
Revised:
Void:

WALL-F-16-EN
PLAN AND ELEVATION (2 OF 3)

Designer: J. Roberts
Detailer: R. Artman
Sheet Subset: WALL
Structure Numbers: WALL-F-16-EN
Subset Sheets: W36 of W59

Project No./Code
ES6 0852-103
17679
Sheet Number 166

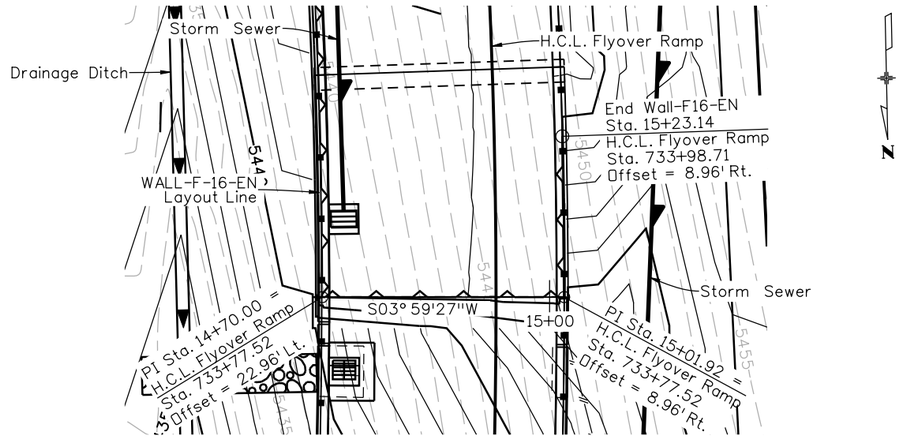

PLAN

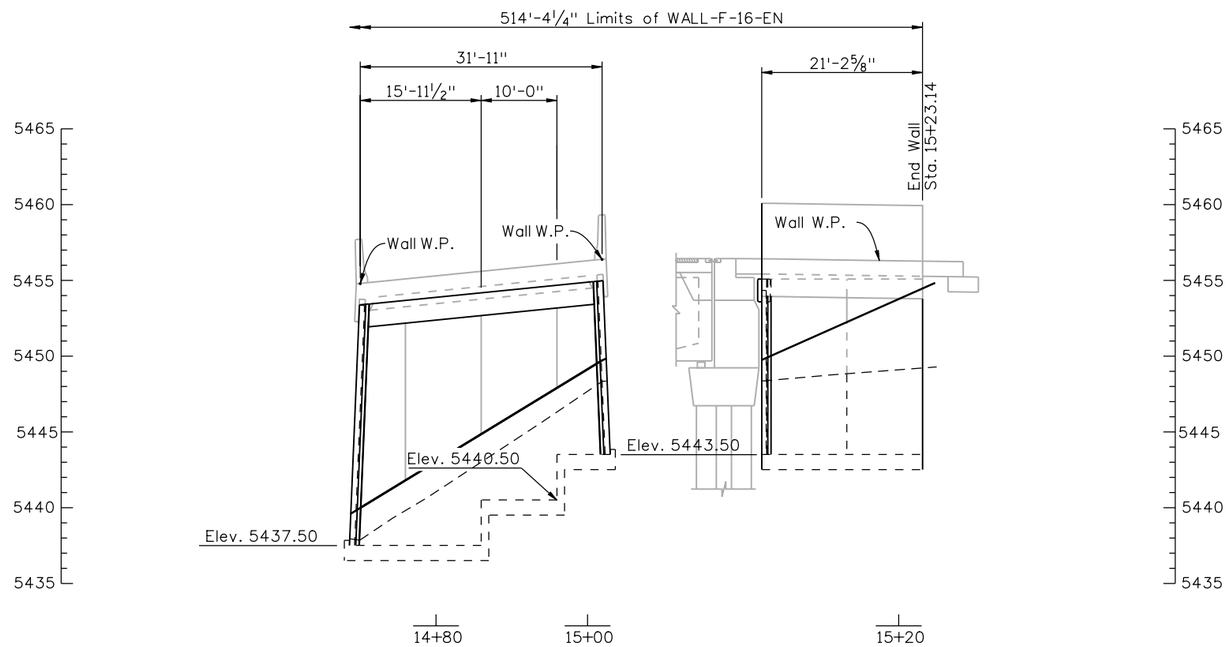

ELEVATION

NOTE:

For notes, see WALL-F-16-EN Plan and Elevation (1 of 3) sheet.

Design			Detail			Quantities		
	INITIAL	DATE		INITIAL	DATE		INITIAL	DATE
Designed By	JAR	01/10	Detailed By	RGA	01/10	Quantities By	AML	01/10
Checked By	TWM	01/10	Checked By	TWM	01/10	Checked By	JAR	01/10

D:Anderson 12:26:28 PM M:\TRN\07-100-311-12\14679\Bridge\Drawings\Walls\Wall F-16-EN\14679EN_MSEWallLay_03.dgn

Print Date: 1/19/2010
File Name: 14679EN_MSEWallLay_03.dgn
Horiz. Scale: 20 Vert. Scale: 10
Unit Information 0224 Unit Leader Initials MH

WILSON & COMPANY Engineers & Architects
999 18TH STREET, SUITE 2600
DENVER, CO 80202
PHONE: 303-297-2976
FAX: 303-297-2693

Sheet Revisions		
Date:	Comments	Init.

Colorado Department of Transportation
DOT DEPARTMENT OF TRANSPORTATION
8833 South Wadsworth Court
Littleton, CO 80128
Phone: 303-972-9112 FAX: 303-972-9114
Region 6 RLB

As Constructed
No Revisions:
Revised:
Void:

WALL-F-16-EN
PLAN AND ELEVATION (3 OF 3)

Designer: J. Roberts
Detailer: R. Artman
Sheet Subset: WALL
Structure Numbers: WALL-F-16-EN
Subset Sheets: W37 of W59

Project No./Code
ES6 0852-103
17679
Sheet Number 167

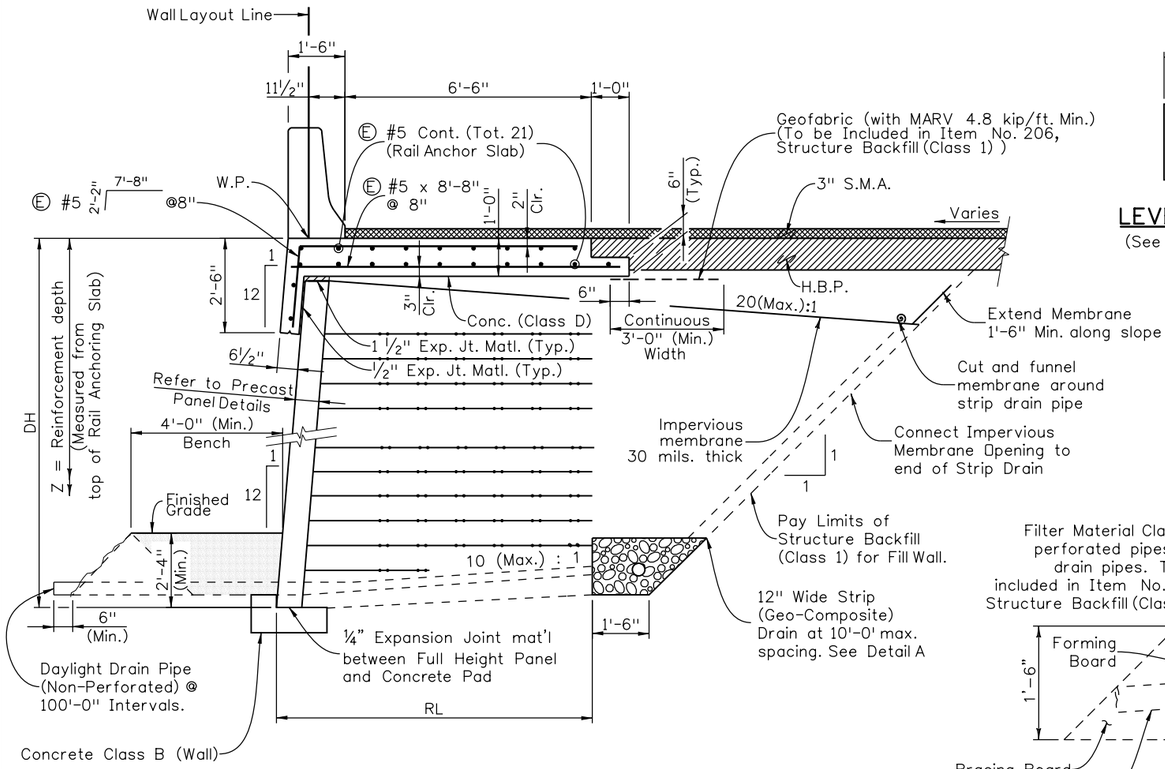

TYPICAL SECTION

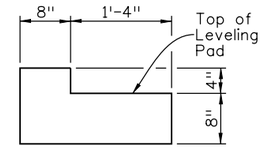

LEVELING PAD SECTION

(See Sheet W48 for Step Detail)

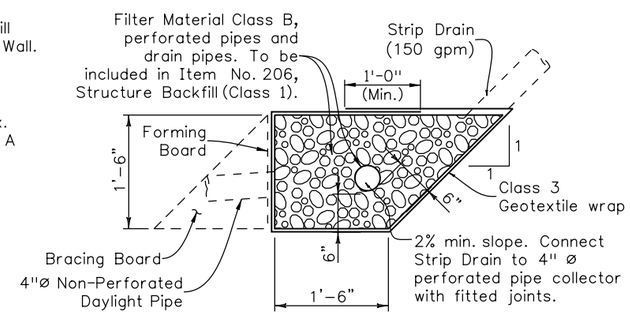

DETAIL A

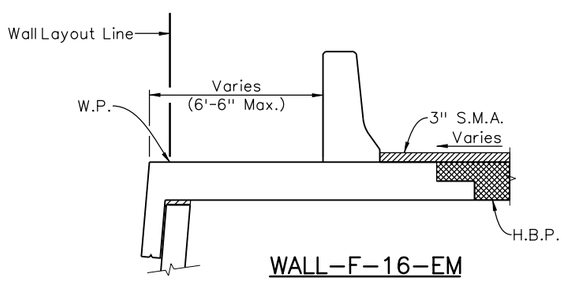

WALL-F-16-EM
MODIFIED RAIL ANCHORING SLAB

(Looking Back Station)

Notes:

1. Begin varying dimension at Sta. 15+38.01 until maximum 6'-6" is reached at Sta. 15+98.71.
2. When maximum is reached transition to Type 7 (CA Special) Bridge Rail.

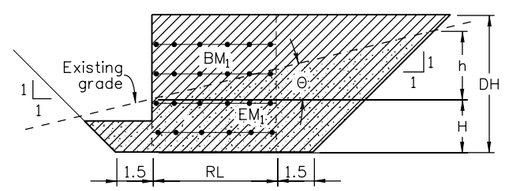

EARTHWORK QUANTITIES

$EM_1 = [(H + \frac{h}{2})(h/TAN\Theta)+0.75H+ \frac{(H - 1.5\ TAN\Theta)(0.5H + 0.75)}{1 - TAN\Theta} -0.5(H+h)^2]/27$

$h = (H+RL+1.5)\frac{TAN\Theta}{1 - TAN\Theta}$

$BM_1 = [DH(RL+1.50)+0.5(DH)^2+1.5(1.50)^2]/27$

Θ = Average angle of existing ground line

$MRS = (DH)(RL)/27$

NOTES:

1. 2'-4" (min.) Structure Backfill (Class 2) is required for erosion control and to conceal and protect a stepped leveling pad. The cost for this material shall be included in the cost for Structure Backfill (Class 1).
2. Soil Reinforcement may be cut to accommodate pipe installation. The cut shall be made in a direction parallel to the pipe centerline, as seen in a plan view.
3. The membrane shall be installed with a constant slope from the facing block all the way to the back in conjunction with the geo-composite down drains at and along the temporary cut slope. The geo-composite drains that connect to the water collector system shall be minimum 12" in width with 10' maximum spacing.
4. All Pipes and Connectors shall be schedule 40 H.D.P.E.
5. Wall connection plate and necessary attachment shall not be paid for separately but shall be included in Item 504 Precast Panel Facing.
6. One side temporary forming board is required to build Detail A. The filter material shall be wrapped with erosion control Class 3 Geotextiles.
7. Working Point (W.P.) is 3" below Profile Grade. Front face of wall is located by projecting 12:1 batter from W.P. For P.G.L. elevations refer to profile sheets.
8. Panels may be stepped at top and bottom of panel. Step at top shall be a minimum 1'-0" above bottom of coping and shall not project into moment slab.
9. See Sheet W41 for Reinforcing Details and Sheet W49 for Panel Details.

ABBREVIATIONS USED

BM_1 = Quantities of Structure Backfill (Class 1) without Shoring (c.y./ft.)
BM_2 = Quantities of Structure Backfill (Class 1) with Shoring (c.y./ft.)
BP = Maximum Required Allowable Bearing Pressure (ksf)
DH = Design Height (or, Avg. ht. for qty. calculations) (ft.)
EM_1 = Quantity of Structure Excavation without Shoring (c.y./ft.)
EM_2 = Quantity of Structure Excavation with Shoring (c.y./ft)
H = Depth of Excavation at Wall Layout Line (ft.)
LTDS = Required Long Term Design Strength (lb./in.)
MARV = Minimum Average roll Value (lb./in.)
MRS = Quantity of Mechanical Reinforcement for prescribed soil zone (c.y./ft.)
RL = Reinforcement Length (ft.)
S = Tributary reinforcement spacing (ft.)
Total = Sum of required LTDS for all layers (lb/in)

DESIGN DATA

AASHTO, 16th Edition without interims for internal design only
Unit weight of concrete = 150 pcf
Unit weight of soil = 125 pcf is assumed.

Internal friction angle of soil for Structure Backfill (Class 1) is assumed to be $\varnothing = 34°$. $K_a = 0.2827$, $K_0 = 0.4408$
Coefficient of resistance to direct sliding = 0.9 (Geogrid)
= 0.6 (Geotextile)

See Project Special Provisions for the relationship between LTDS and MARV of Geosynthetic Soil Reinforcement.

Design				Detail				Quantities		
	INITIAL	DATE		INITIAL	DATE		INITIAL	DATE
Designed By	JAR	01/10	Detailed By	DRA	01/10	Quantities By	AML	01/10
Checked By	DSO	01/10	Checked By	DSO	01/10	Checked By	JAR	01/10

Print Date: 1/19/2010
File Name: 14679_Rdwy_MSE_Wall_Sections_01.dgn
Horiz. Scale: 1:1 Vert. Scale: As Noted
Unit Information 0224 Unit Leader Initials MH

WILSON & COMPANY Engineers & Architects
999 18TH STREET, SUITE 2800
DENVER, CO 80202
PHONE: 303-297-2976
FAX: 303-297-2693

Sheet Revisions		
Date:	Comments	Init.

Colorado Department of Transportation
DOT DEPARTMENT OF TRANSPORTATION
8833 South Wadsworth Court
Littleton, CO 80128
Phone: 303-972-9112 FAX: 303-972-9114
Region 6 RLB

As Constructed
No Revisions:
Revised:
Void:

ROADWAY - MSE WALL
SECTION DETAILS (1 OF 3)

Designer: J. Roberts
Detailer: D. Anderson
Sheet Subset: WALL
Structure Numbers
Subset Sheets: W38 of W59

Project No./Code
ES6 0852-103
17679
Sheet Number 168

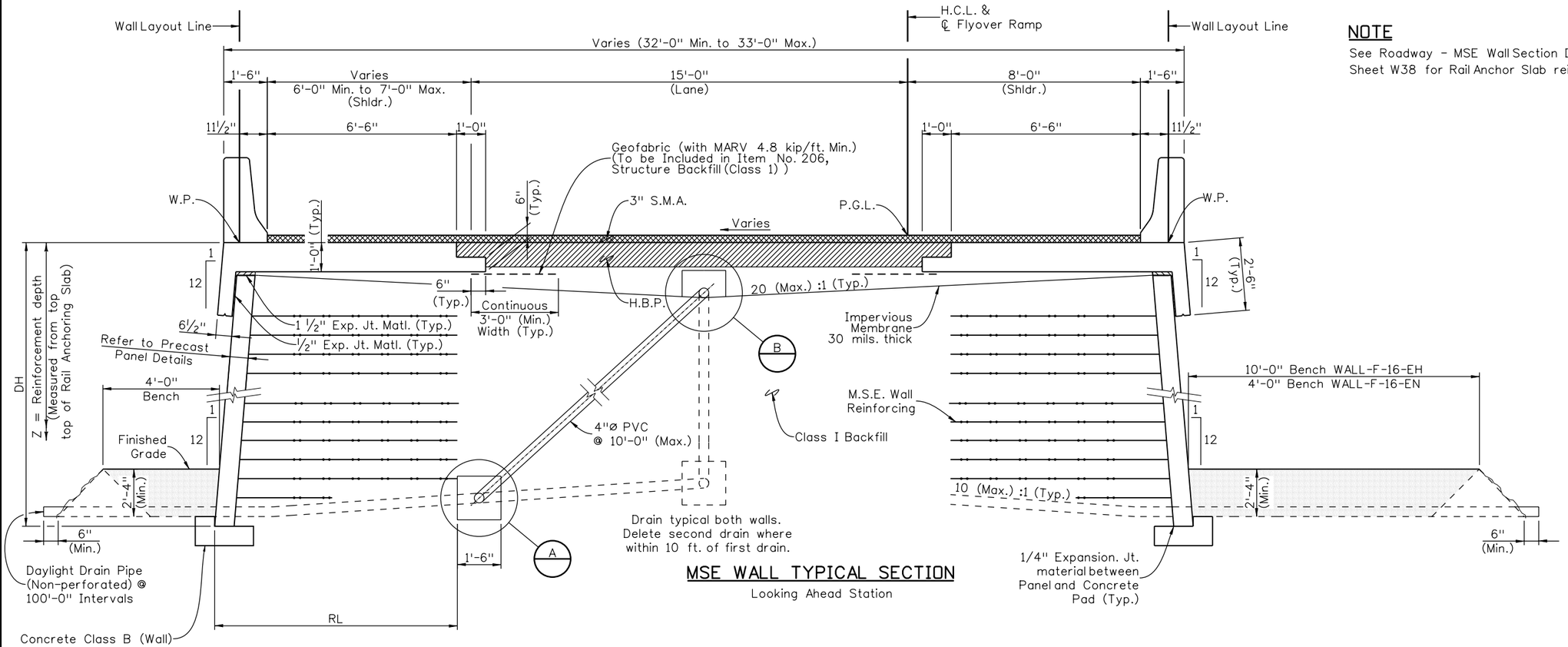

MSE WALL TYPICAL SECTION

Looking Ahead Station

NOTE

See Roadway - MSE Wall Section Details (1 of 3)
Sheet W38 for Rail Anchor Slab reinforcement details.

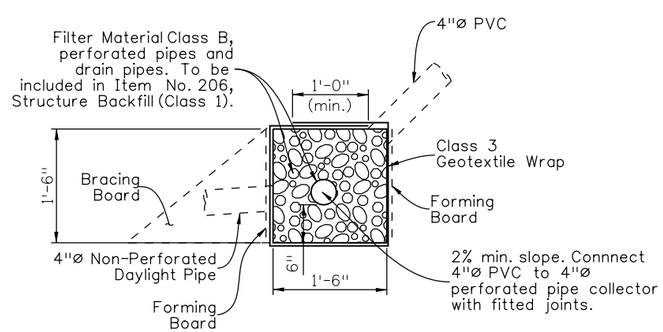

DETAIL A

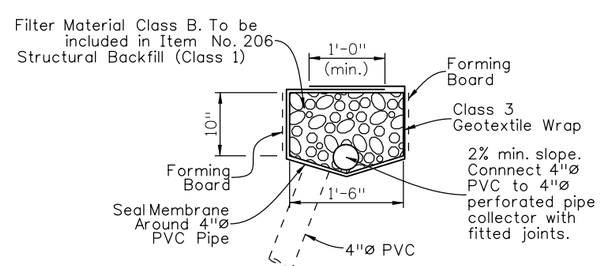

DETAIL B

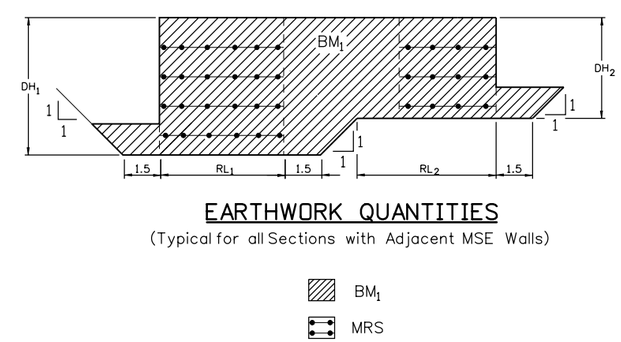

EARTHWORK QUANTITIES

(Typical for all Sections with Adjacent MSE Walls)

Quantities		
	INITIAL	DATE
Quantities By	AML	01/10
Checked By	JAR	01/10

Detail		
	INITIAL	DATE
Detailed By	RGA	01/10
Checked By	DSO	01/10

Design		
	INITIAL	DATE
Designed By	JAR	01/10
Checked By	DSO	01/10

Print Date: 1/19/2010
File Name: 14679_Rdwy_MSE_Wall_Sections_02.dgn
Horiz. Scale: 1:1 Vert. Scale: As Noted
Unit Information 0224 Unit Leader Initials MH

WILSON & COMPANY Engineers & Architects
999 18TH STREET, SUITE 2600
DENVER, CO 80202
PHONE: 303-297-2976
FAX: 303-297-2693

Sheet Revisions		
Date:	Comments	Init.

Colorado Department of Transportation
CDOT DEPARTMENT OF TRANSPORTATION
8833 South Wadsworth Court
Littleton, CO 80128
Phone: 303-972-9112 FAX: 303-972-9114
Region 6 RLB

As Constructed
No Revisions:
Revised:
Void:

ROADWAY - MSE WALL
SECTION DETAILS (2 OF 3)

Designer: J. Roberts
Detailer: R. Artman
Structure Numbers
Sheet Subset: WALL
Subset Sheets: W39 of W59

Project No./Code
ES6 0852-103
17679
Sheet Number 169

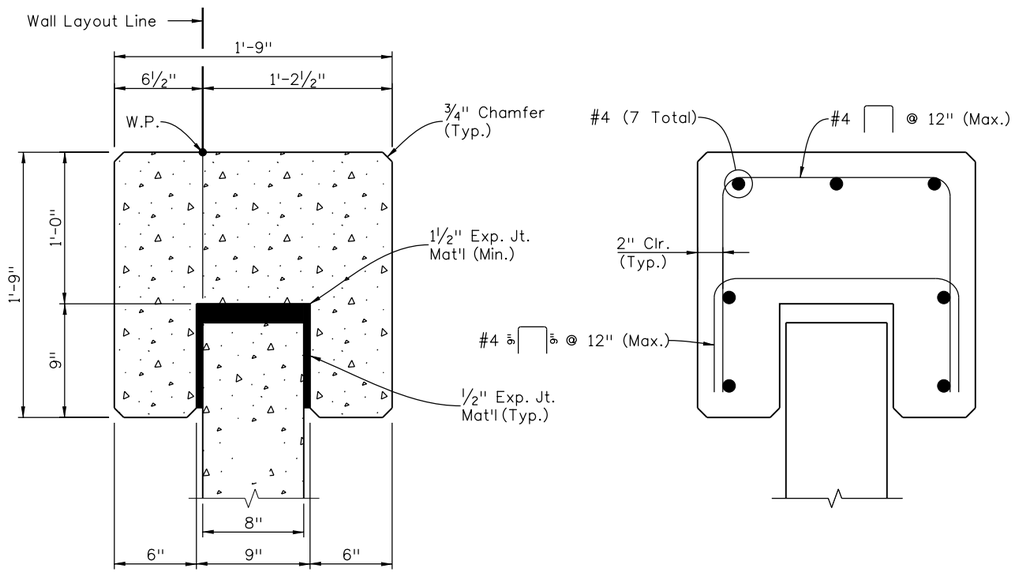

WALL CAP SECTION

(WALL-F-16-EH & WALL-F-16-EN)

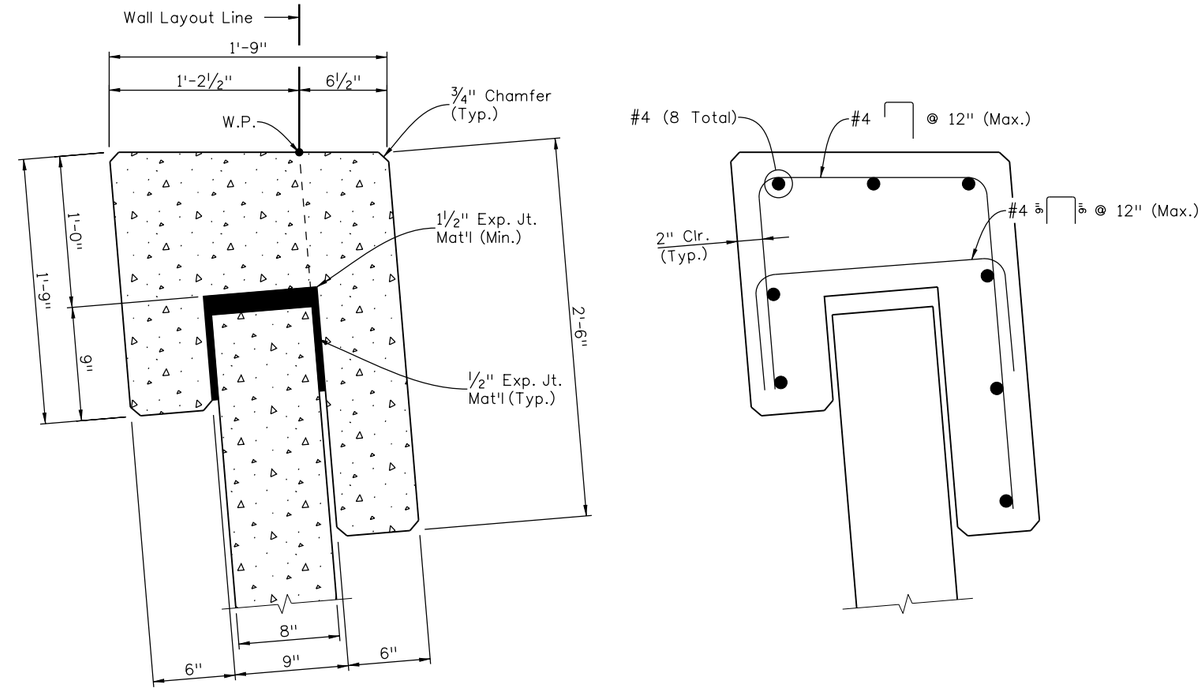

WALL CAP SECTION

(WALL-F-16-EM)

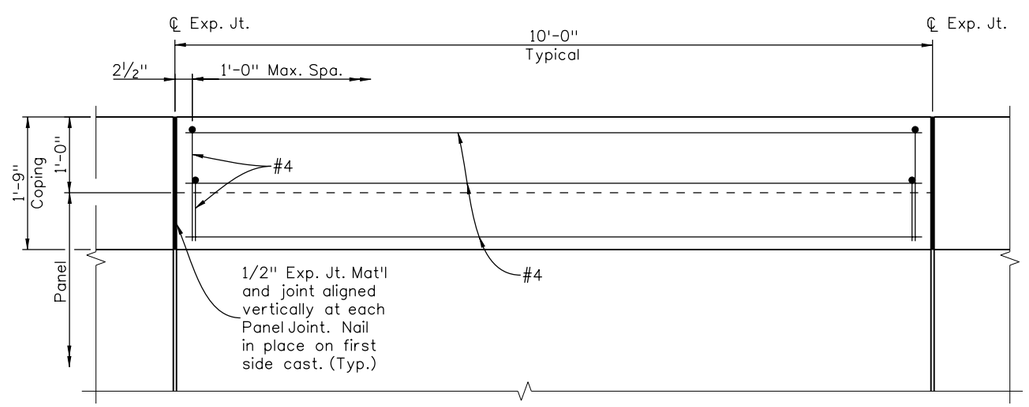

WALL CAP ELEVATION

Design	INITIAL	DATE
Designed By	JAR	01/10
Checked By	DSO	01/10

Detail	INITIAL	DATE
Detailed By	RGA	01/10
Checked By	DSO	01/10

Quantities	INITIAL	DATE
Quantities By	AML	01/10
Checked By	JAR	01/10

Print Date: 1/19/2010
File Name: 14679_Rdwy_MSE_Wall_Sections_03.dgn
Horiz. Scale: 1:1 Vert. Scale: As Noted
Unit Information 0224 Unit Leader Initials MH

WILSON & COMPANY Engineers & Architects
999 18TH STREET, SUITE 2600
DENVER, CO 80202
PHONE: 303-297-2976
FAX: 303-297-2693

Sheet Revisions		
Date:	Comments	Init.

Colorado Department of Transportation
8833 South Wadsworth Court
Littleton, CO 80128
Phone: 303-972-9112 FAX: 303-972-9114
Region 6 RLB

As Constructed
No Revisions:
Revised:
Void:

ROADWAY - MSE WALL SECTION DETAILS (3 OF 3)

Designer: J. Roberts
Detailer: R. Artman
Sheet Subset: WALL
Structure Numbers
Subset Sheets: W40 of W59

Project No./Code
ES6 0852-103
17679
Sheet Number 170

GENERAL NOTES

The required LTDS for different reinforcement layer depth (Z) is determined with the following equations, using the values as depicted in the loading diagram.

$\sigma_V = (Z - 1.0)\,\gamma_{soil} + 1.0\,(\gamma_{cons}) + 36 \text{ psf} + 2.0\,(\gamma_{soil})$

$LTDS \geq (K \cdot \sigma_V + \text{Rail Impact})S/12$
Where K = Ka for Geosynthetic reinforcement or

$\text{Rail Impact} = [1 - (Z - 1)/14.1083] \cdot 202.57$
Where $1.0 \leq Z \leq 14.1083$

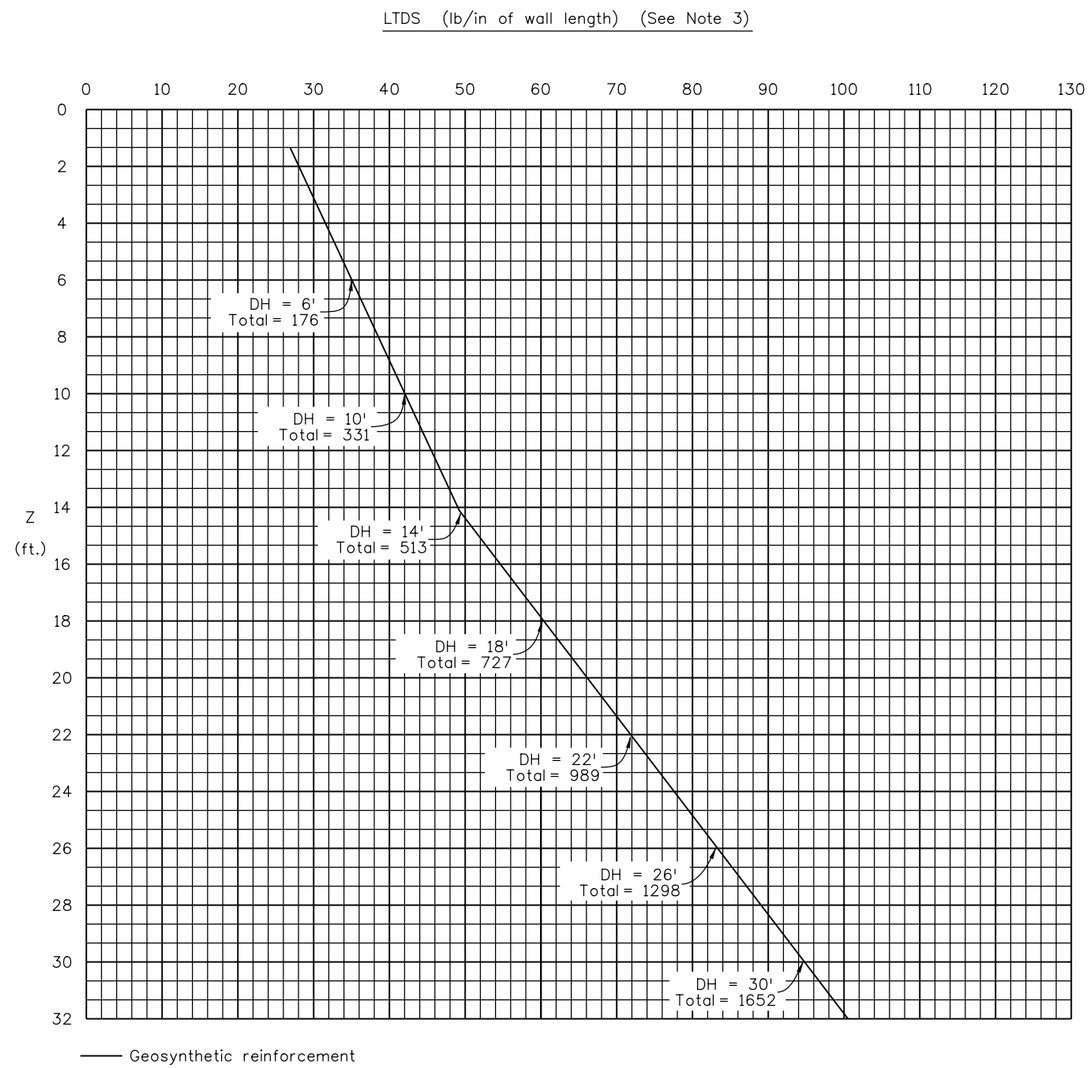

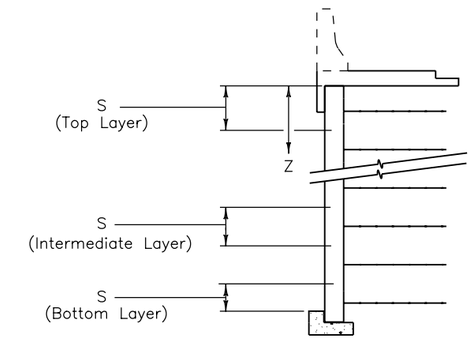

REINFORCEMENT PATTERN

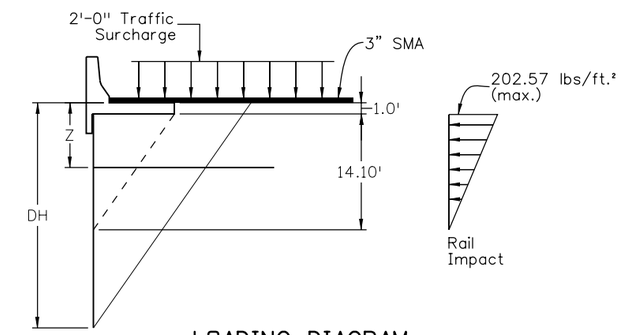

LOADING DIAGRAM

TABLE

Design parameters for wall heights from 3.00' to 32.00'

DH (ft)	RL ** (ft)	BP (ksf)
3.0	6.00	0.90
4.0	6.00	1.22
5.0	6.00	1.56
6.0	6.00	1.88
7.0	7.00	2.17
8.0	8.00	2.42
9.0	8.00	2.54
10.0	8.00	2.56
11.0	8.00	2.66
12.0	8.40	2.76
13.0	9.10	2.87
14.0	9.80	2.98
15.0	10.50	3.09
16.0	11.20	3.21
17.0	11.90	3.33
18.0	12.60	3.46
19.0	13.30	3.58
20.0	14.00	3.71
21.0	14.70	3.84
22.0	15.40	3.97
23.0	16.10	4.11
24.0	16.80	4.24
25.0	17.50	4.37
26.0	18.20	4.51
27.0	18.90	4.65
28.0	19.60	4.78
29.0	20.30	4.92
30.0	21.00	5.05
31.0	21.70	5.19
32.0	22.40	5.33

** See Project Special Provisions for minimum RL requirements.

NOTES

1. See Project Special Provisions for minimum reinforcement lengths.
2. Spacing S in the vertical distance from the center of reinforced fill layers.
3. Graph values must be multiplied by S in feet to obtain the required LTDS per inch of wall.
4. For the installation of an impervious membrane, the reinforcement shall be started 2.67 ft. from the top of wall where the wall is stepped or when the wall height is greater than 10'-0".
5. See sheet W49 for wall panel details.

Design	INITIAL	DATE	Detail	INITIAL	DATE	Quantities	INITIAL	DATE
Designed By	JAR	01/10	Detailed By	RGA	01/10	Quantities By	AML	01/10
Checked By	DSO	01/10	Checked By	DSO	01/10	Checked By	JAR	01/10

Print Date: 1/19/2010
File Name: 14679_Rdwy_MSE_Wall_Reinf.dgn
Horiz. Scale: 1:1 Vert. Scale: As Noted
Unit Information 0224 Unit Leader Initials MH

WILSON & COMPANY Engineers & Architects
999 18TH STREET, SUITE 2600
DENVER, CO 80202
PHONE: 303-297-2976
FAX: 303-297-2693

Sheet Revisions

Date:	Comments	Init.

Colorado Department of Transportation
DOT DEPARTMENT OF TRANSPORTATION
8833 South Wadsworth Court
Littleton, CO 80128
Phone: 303-972-9112 FAX: 303-972-9114
Region 6 RLB

As Constructed
No Revisions:
Revised:
Void:

ROADWAY - MSE WALL REINFORCEMENT
Designer: J. Roberts
Detailer: R. Artman
Sheet Subset: WALL
Structure Numbers
Subset Sheets: W41 of W59

Project No./Code
ES6 0852-103
17679
Sheet Number 171

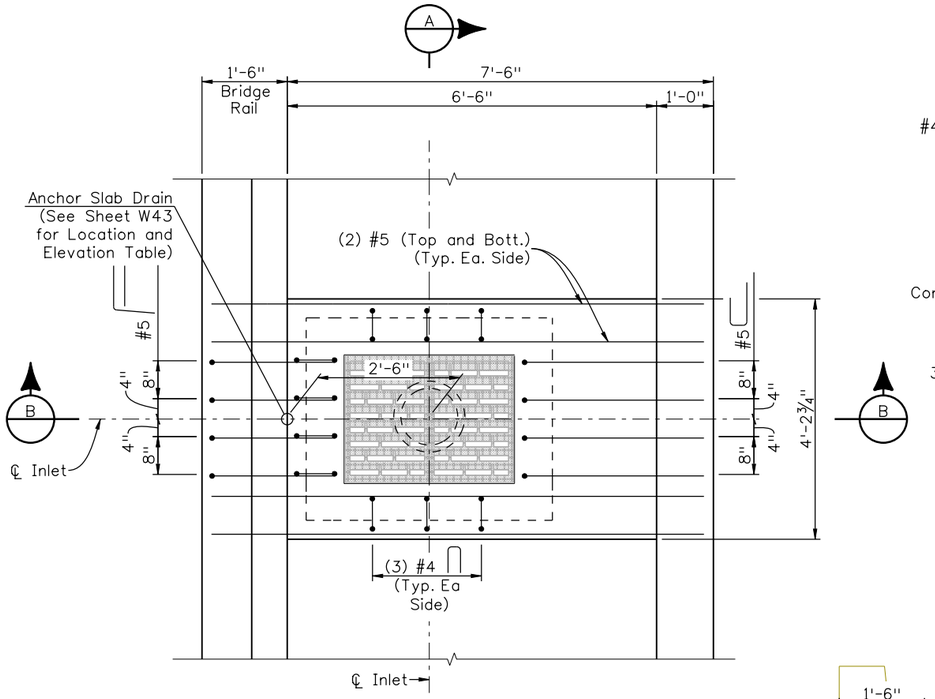

PLAN AT ANCHOR SLAB DRAIN

(Typ. Anchor Slab Reinf. not shown for clarity)

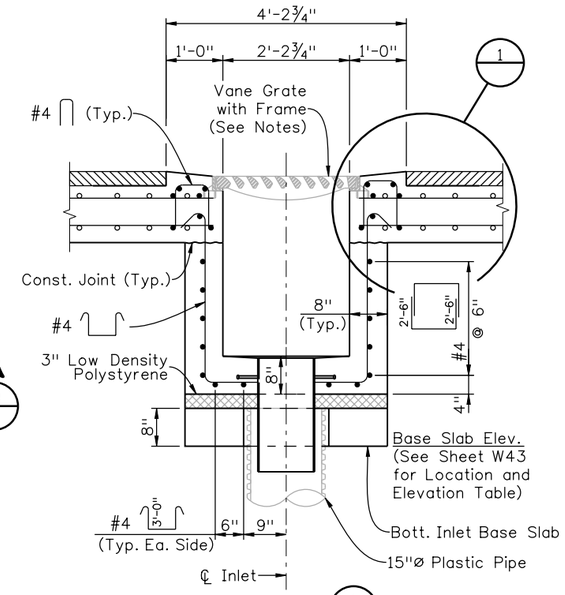

SECTION A

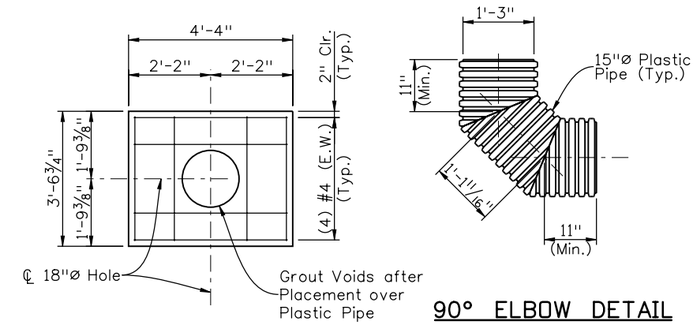

INLET BASE SLAB DETAIL

90° ELBOW DETAIL

NOTES:

1. Cutting of anchor slab reinforcement will not be allowed.
2. Grate to be installed during construction of inlet with the vane grate bolted in place to the frame. The cost of the grate, grate frame, expanded polystyrene, plastic pipe, elbows, steel pipe, galvanizing, and other miscellaneous items required to construct inlet shall be included in the cost of the work. Concrete (Class D), reinforcement, and anchors will not be measured but will be paid for under Item No. 604-25000, Vane Grate Inlet (Special).
3. Plastic pipe shall conform to the requirements of AASHTO M294, Type S. Plastic pipe shall be joined by watertight couplings as recommended by the Pipe Supplier or as approved. All joints shall be mechanically restrained to prevent separation.
4. Inlet Box and Base Slab may be cast-in-place or pre-cast.
5. See Standard Plan No. M-604-25 for additional details.
6. See Roadway - MSE Wall Plan and Elevations for Stations, Offsets and Elevations.

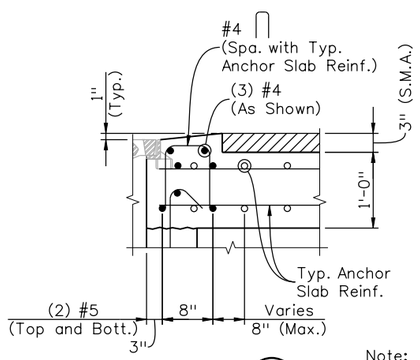

DETAIL 1

Note:
Adjust Reinf. to avoid Grate Frame as necessary. Bundle #5 bars with Typ. Anchor Slab Reinf. if necessary

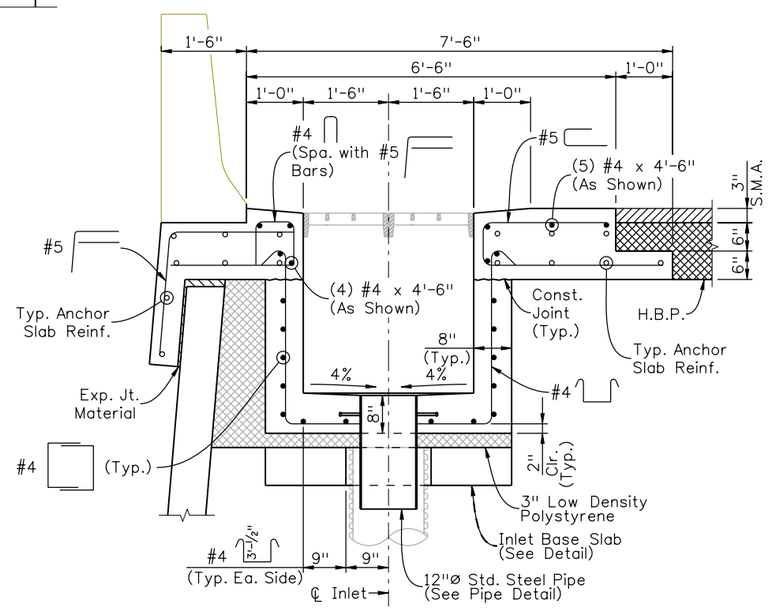

SECTION B

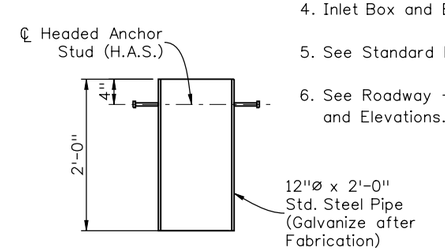

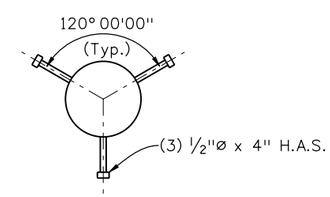

PIPE DETAIL

Design			Detail			Quantities		
	INITIAL	DATE		INITIAL	DATE		INITIAL	DATE
Designed By	TRJ	10/09	Detailed By	RGA	10/09	Quantities By	TRJ	10/09
Checked By	MJN	10/09	Checked By	MJN	10/09	Checked By	MJN	10/09

DAnderson 12:32:25 PM M:\TRN\07-100-311-12\14679\Bridge\Drawings\Walls\14679_InletDet_01.dgn

Print Date: 1/19/2010	Sheet Revisions	Colorado Department of Transportation	As Constructed
File Name: 14679_InletDet_01.dgn	Date: / Comments / Init.	8833 South Wadsworth Court, Littleton, CO 80128, Phone: 303-972-9112 FAX: 303-972-9114	No Revisions:
Horiz. Scale: 1:1 Vert. Scale: As Noted		Region 6 RLB	Revised:
Unit Information 0224 Unit Leader MH			Void:

WILSON & COMPANY Engineers & Architects, 999 18TH STREET, SUITE 2800, DENVER, CO 80202, PHONE: 303-297-2976, FAX: 303-297-3853

ROADWAY - MSE WALL
TYPE 1 INLET DETAILS

Designer: T. Johnson
Detailer: R. Artman
Sheet Subset: WALL
Structure Numbers
Subset Sheets: W42 of W59

Project No./Code: ES6 0852-103
17679
Sheet Number 172

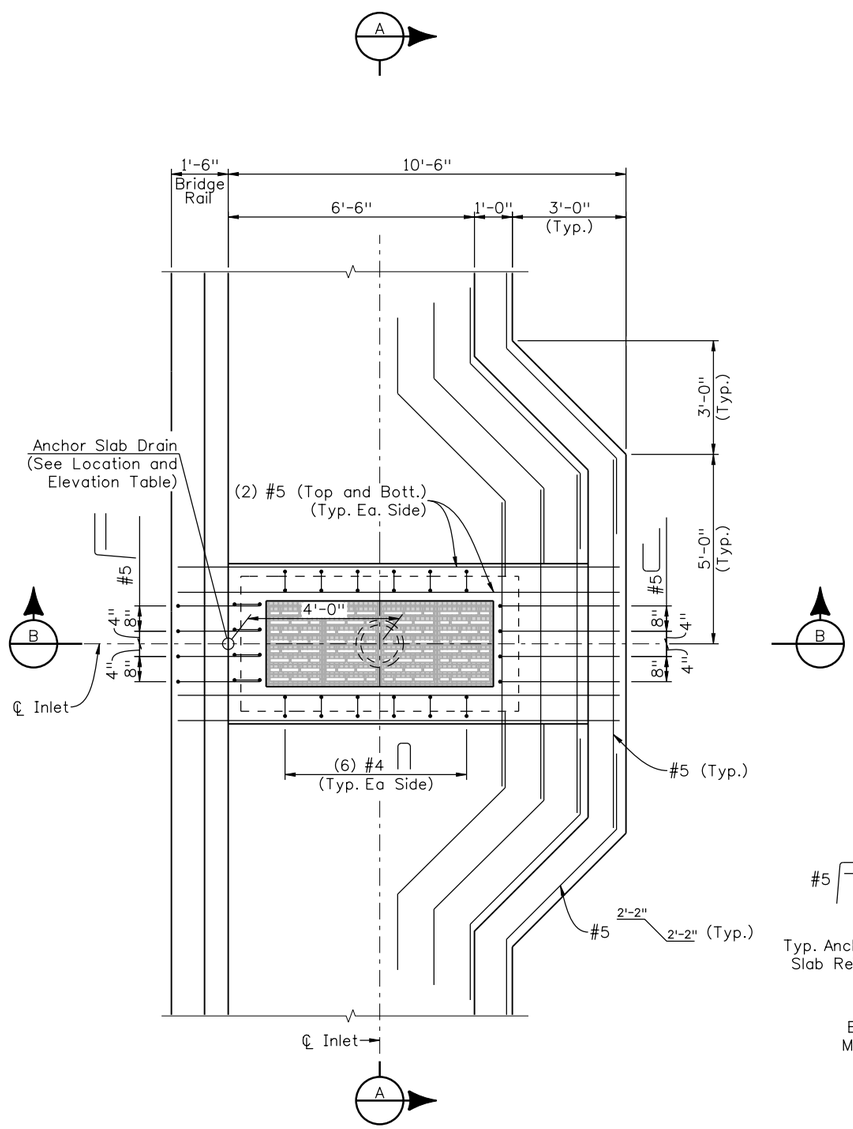

PLAN AT ANCHOR SLAB DRAIN
(Typ. Anchor Slab Reinf. not shown for clarity)

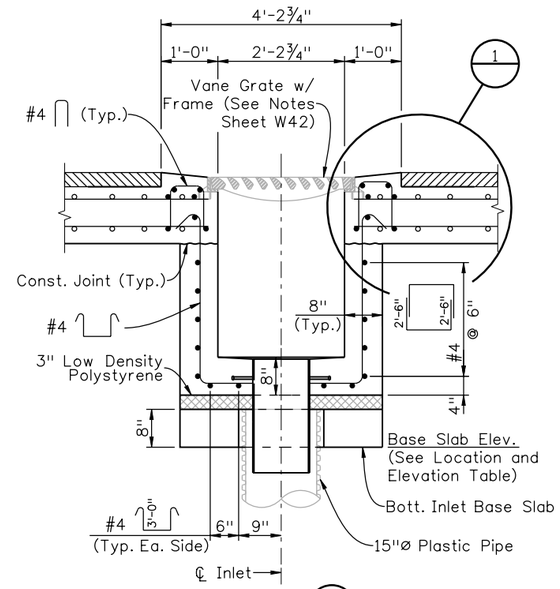

SECTION A

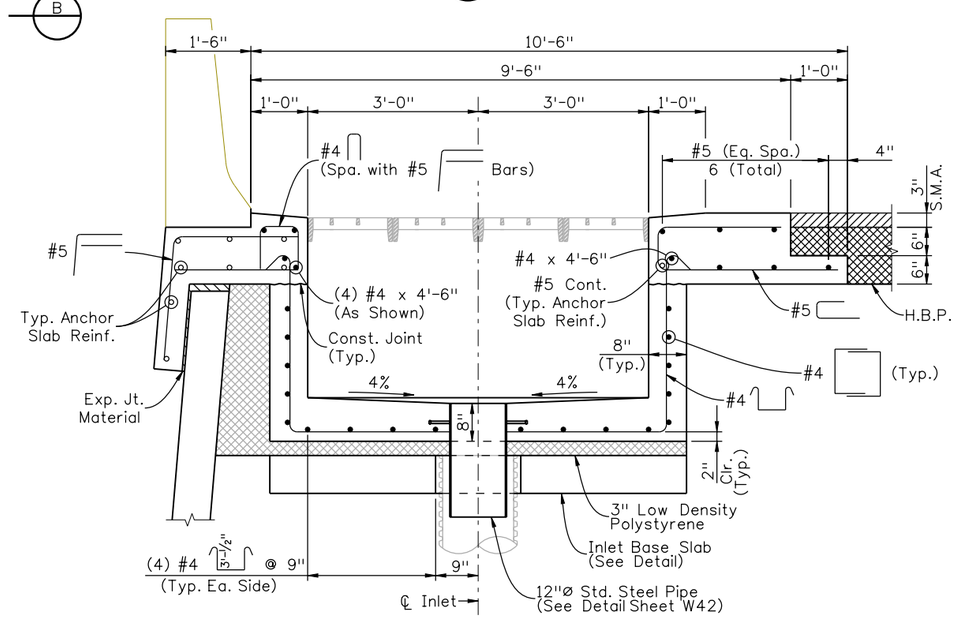

SECTION B

INLET LOCATIONS AND ELEVATIONS TABLE						
Inlet	Wall	Wall Section	Flyover Station	Offset from Flyover H.C.L.	Inlet Type	Base Slab Elevation
707.02R	F-16-EH	11+31.86	707+01.83	8.00 Rt.	Type 2	5396.97
708.79R	F-16-EH	13+08.67	708+78.64	8.00 Rt.	Type 2	5397.90
711.44R	F-16-EH	15+73.93	711+43.90	8.00 Rt.	Type 2	5404.19
744.22R	F-16-EM	10+78.17	744+22.13	8.00 Rt.	Type 2	5491.62
737.11L	F-16-EN	11+37.87	737+10.78	21.00 Lt.	Type 1	5456.29
734.25L	F-16-EN	14+23.94	734+25.78	22.00 Lt.	Type 3	5450.61

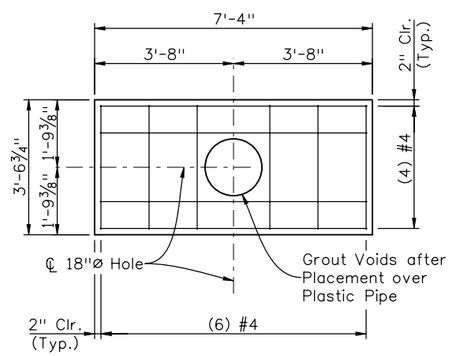

INLET BASE SLAB DETAIL

Design				Detail				Quantities			
	INITIAL	DATE			INITIAL	DATE			INITIAL	DATE
Designed By	TRJ	10/09	Detailed By	RGA	10/09	Quantities By	TRJ	10/09
Checked By	MJN	10/09	Checked By	MJN	10/09	Checked By	MJN	10/09

DAnderson 12:33:15 PM M:\TRN\07-100-311-12\14679\Bridge\Drawings\Walls\14679_InletDet_02.dgn

Print Date: 1/19/2010	Sheet Revisions	Colorado Department of Transportation	As Constructed
File Name: 14679_InletDet_02.dgn	Date: / Comments / Init.	8833 South Wadsworth Court Littleton, CO 80128 Phone: 303-972-9112 FAX: 303-972-9114	No Revisions:
Horiz. Scale: 1:1 Vert. Scale: As Noted		Region 6 RLB	Revised:
Unit Information 0224 Unit Leader MH			Void:

WILSON & COMPANY Engineers & Architects — 999 18TH STREET, SUITE 2800, DENVER, CO 80202, PHONE: 303-297-2976, FAX: 303-297-2983

ROADWAY - MSE WALL
TYPE 2 INLET DETAILS

Designer:	T. Johnson	Structure Numbers	
Detailer:	R. Artman		
Sheet Subset:	WALL	Subset Sheets: W43 of W59	

Project No./Code: ES6 0852-103
17679
Sheet Number 173

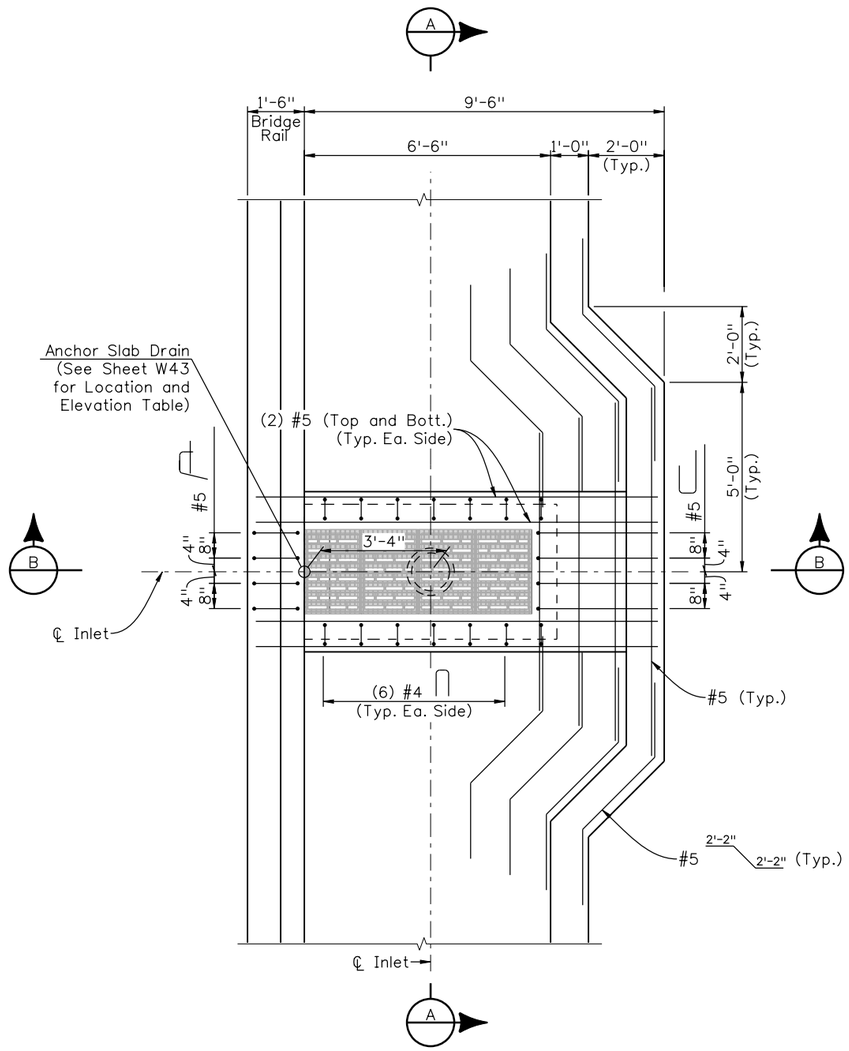

PLAN AT ANCHOR SLAB DRAIN
(Typ. Anchor Slab Reinf. not shown for clarity)

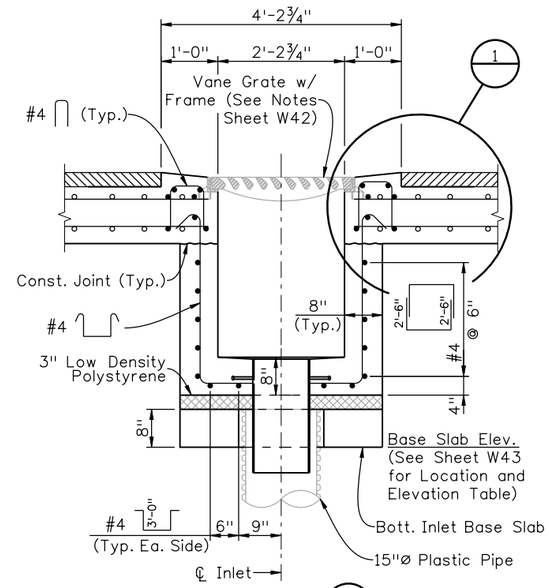

SECTION A

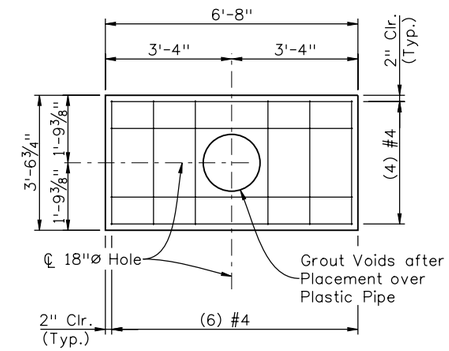

INLET BASE SLAB DETAIL

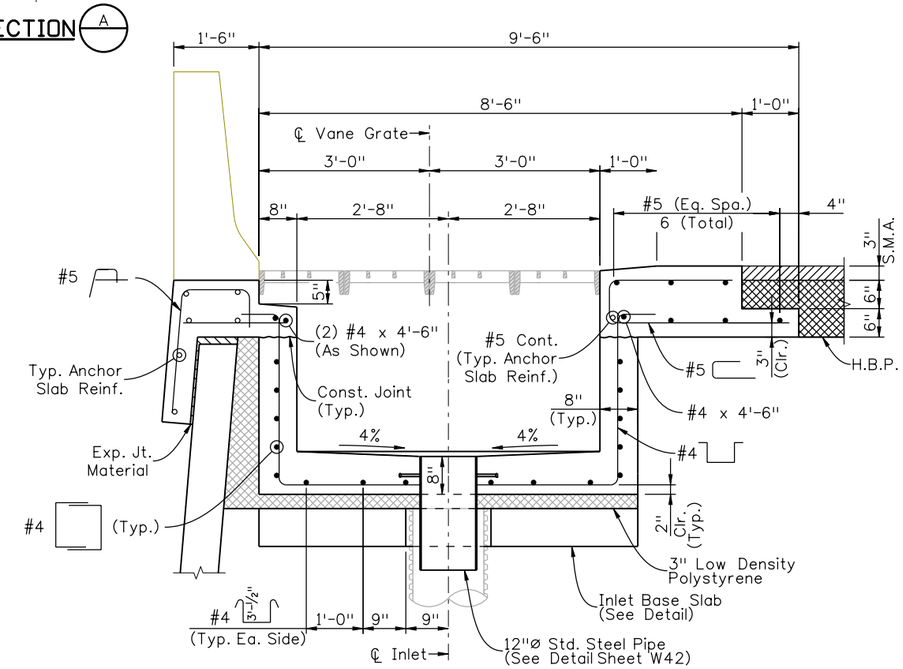

SECTION B

Quantities		
Quantities By	INITIAL	DATE
TRJ	TRJ	10/09
Checked By	MJN	10/09

Detail		
Detailed By	INITIAL	DATE
RGA	RGA	10/09
Checked By	MJN	10/09

Design		
Designed By	INITIAL	DATE
TRJ	TRJ	10/09
Checked By	MJN	10/09

D Anderson 12:36:58 PM M:\TRN\07-100-311-12\14679\Bridge\Drawings\Walls\14679_InletDet_03.dgn

Print Date: 1/19/2010
File Name: 14679_InletDet_03.dgn
Horiz. Scale: 1:1 Vert. Scale: As Noted
Unit Information 0224 Unit Leader MH

WILSON & COMPANY Engineers & Architects
999 18TH STREET, SUITE 2600
DENVER, CO 80202
PHONE: 303-297-2976
FAX: 303-297-2893

Sheet Revisions		
Date:	Comments	Init.

Colorado Department of Transportation
DOT DEPARTMENT OF TRANSPORTATION
8833 South Wadsworth Court
Littleton, CO 80128
Phone: 303-972-9112 FAX: 303-972-9114
Region 6 RLB

As Constructed
No Revisions:
Revised:
Void:

ROADWAY - MSE WALL
TYPE 3 INLET DETAILS

Designer: T. Johnson
Detailer: R. Artman
Sheet Subset: WALL
Structure Numbers
Subset Sheets: W44 of W59

Project No./Code
ES6 0852-103
17679
Sheet Number 174

14679_InletDet_03.dgn 1/19/2010 12:36:58 PM

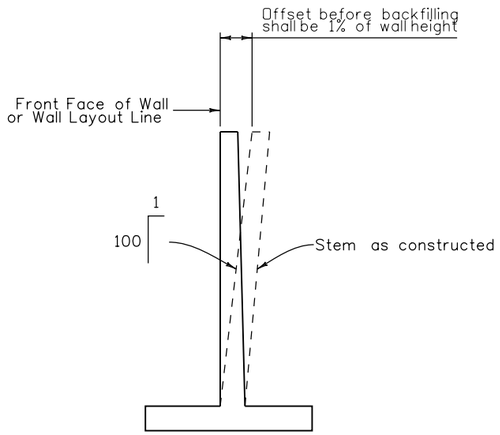

WALL OFFSETS

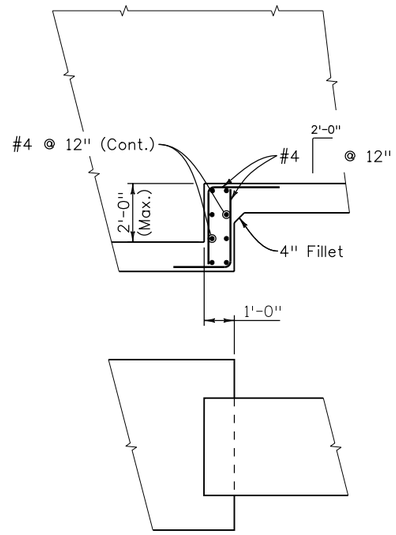

FOOTING STEP

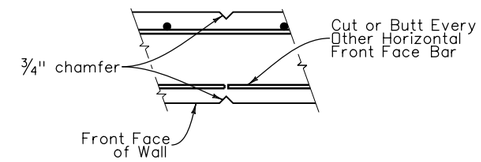

WEAKENED PLANE DETAIL

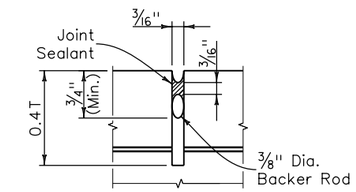

SLAB CONTRACTION JOINT DETAIL

(For WALL-F-16-EI and WALL-F-16-EJ)

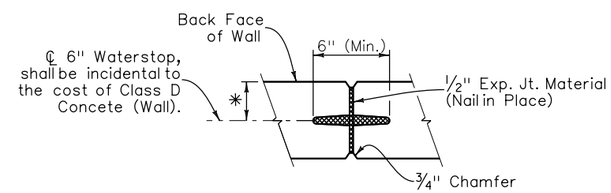

EXPANSION JOINT DETAIL

* 4 1/2" for WALL-F-16-EI and WALL-F-16-EJ
6" for WALL-F-16-EK, WALL-F-16-EO and WALL-F-16-EQ

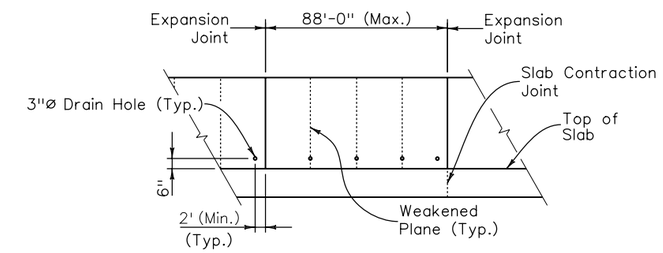

WALL AND TRAIL SLAB EXPANSION JOINTS AND WEAKENED PLANES

(For WALL-F-16-EI and WALL-F-16-EJ)

(3"Ø Drains to be Placed at Each Weakened Plane and Minimum 2'-0" Away From Expansion Joints)

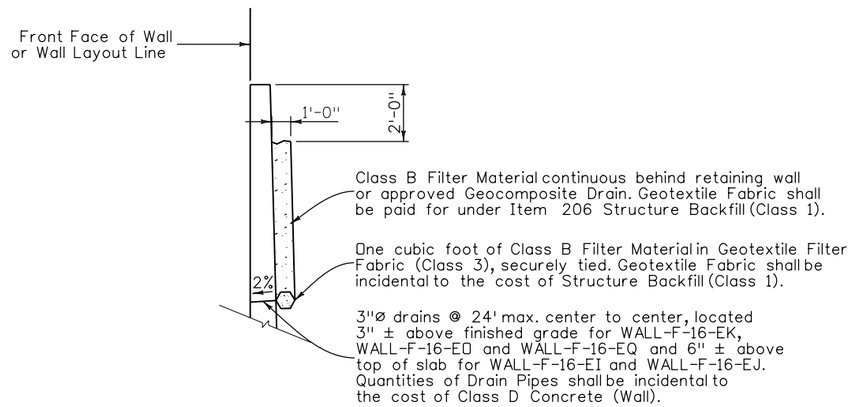

DRAINAGE

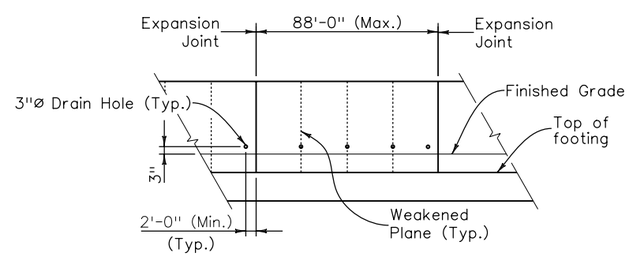

WALL EXPANSION JOINTS AND WEAKENED PLANES

(Do Not Extend Joints Through Footing)

(For WALL-F-16-EK, WALL-F-16-EO and WALL-F-16-EQ)

(3"Ø Drains to be Placed at Each Weakened Plane and Minimum 2'-0" Away From Expansion Joints)

Design			Detail			Quantities		
	INITIAL	DATE		INITIAL	DATE		INITIAL	DATE
Designed By	JAR	01/10	Detailed By	DRA	01/10	Quantities By	AML	01/10
Checked By	DSO	01/10	Checked By	DSO	01/10	Checked By	TWM	01/10

D:Anderson 12:37:27 PM M:\TRN\07-100-311-12\14679\Bridge\Drawings\Walls\14679_CIP_Wall_Details.dgn

Print Date: 1/19/2010
File Name: 14679_CIP_Wall_Details.dgn
Horiz. Scale: 1:1 Vert. Scale: As Noted
Unit Information 0224 Unit Leader Initials MH

WILSON & COMPANY Engineers & Architects
999 18TH STREET, SUITE 2800
DENVER, CO 80202
PHONE: 303-297-2976
FAX: 303-297-2693

Sheet Revisions		
Date:	Comments	Init.

Colorado Department of Transportation
DOT
DEPARTMENT OF TRANSPORTATION
8833 South Wadsworth Court
Littleton, CO 80128
Phone: 303-972-9112 FAX: 303-972-9114
Region 6 RLB

As Constructed
No Revisions:
Revised:
Void:

CIP WALL DETAILS

Designer: J. Roberts
Detailer: D. Anderson
Sheet Subset: WALL
Structure Numbers
Subset Sheets: W45 of W59

Project No./Code
ES6 0852-103
17679
Sheet Number 175

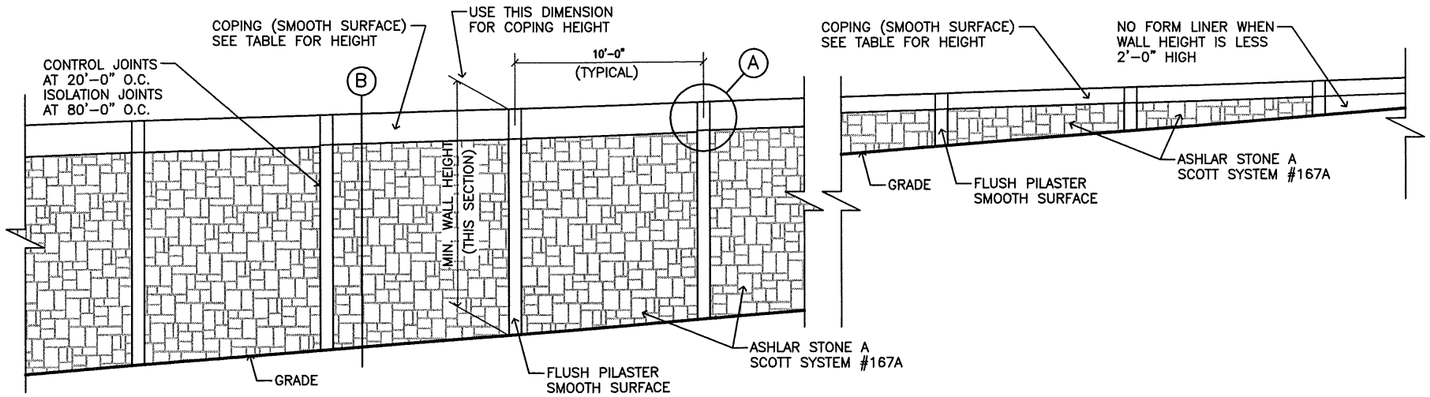

CAST-IN-PLACE RETAINING WALL ELEVATIONS

1/8" = 1'-0"

GENERAL NOTES:

1. ALL FORM LINER FOR THE CAST-IN-PLACE WALLS ARE BY SCOTT SYSTEMS INC. DENVER, COLORADO OR APPROVED EQUAL.

2. ALL EXPOSED SURFACES OF THE CAST-IN-PLACE WALLS (INCLUDING 1'-0" BELOW GRADE) ARE TO RECEIVE STRUCTURAL CONCRETE STAIN..

3. STRUCTURAL CONCRETE STAIN COLOR SHALL MATCH C-470 (LIGHTER COLOR) OR AS DIRECTED BY THE PROJECT ENGINEER.

4. SEE STRUCTURAL DRAWINGS FOR ADDITION INFORMATION.

COPING HEIGHT

MINIMUM WALL HEIGHT BETWEEN VERTICAL FLUSH PILASTERS, EACH PANEL	COPING HEIGHT
0" TO 4'-0"	10"
4'-1" TO 5'-0"	11"
5'-1" TO 6'-0"	1'-0"
6'-1" TO 7'-0"	1'-1"
7'-1" TO 8'-0"	1'-2"
8'-1" TO 9'-0"	1'-3"
9'-1" TO 10'-0"	1'-4"
10'-1" TO 11'-0"	1'-5"
11'-1" TO 12'-0"	1'-6"
12'-1" TO 13'-0"	1'-7"
13'-1" TO 14'-0"	1'-8"
14'-1" TO 15'-0"	1'-9"
15'-1" TO 16'-0"	1'-10"
16'-1" TO 17'-0"	1'-11"
17'-1" AND UP	2'-0"

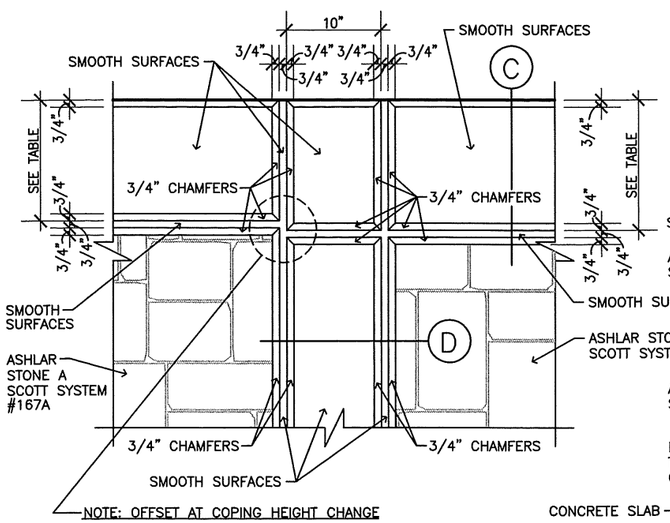

A COPING ELEVATION

3/4" = 1'-0"

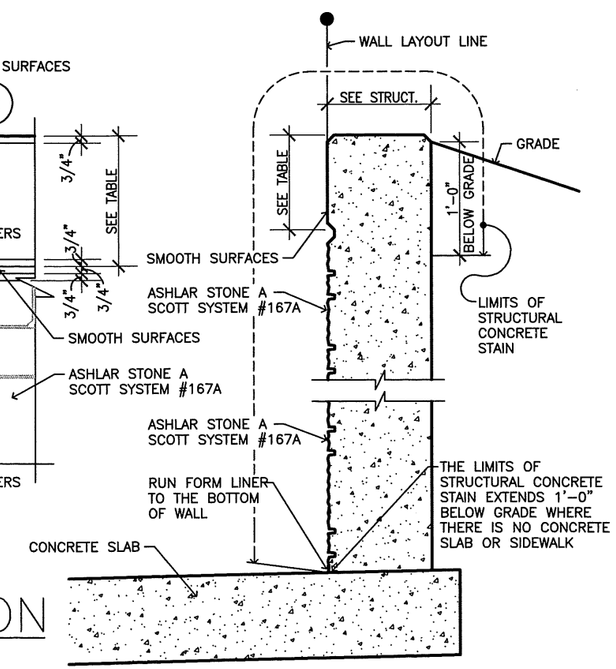

B WALL SECTION

3/4" = 1'-0"

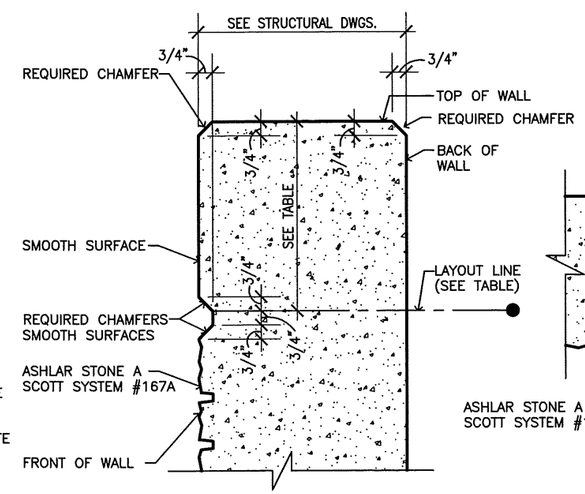

C COPING DETAIL

1 1/2" = 1'-0"

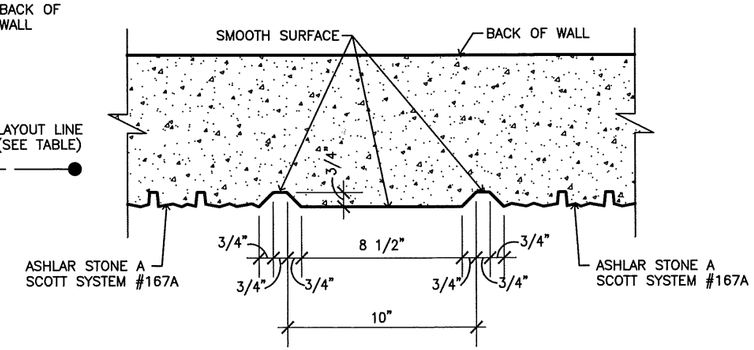

D FLUSH PILASTER DETAIL

1 1/2" = 1'-0"

Design	INITIAL	DATE
Designed By	TJR	12/09
Checked By	TJR	12/09

Detail	INITIAL	DATE
Detailed By	XXX	MM/YY
Checked By	XXX	MM/YY

Quantities	INITIAL	DATE
Quantities By	XXX	MM/YY
Checked By	XXX	MM/YY

Print Date: 1-19-10
File Name: .
Horiz. Scale: AS NOTED Vert. Scale: N/A
Unit Information Unit Leader Initials

WILSON & COMPANY Engineers & Architects
999 18TH STREET, SUITE 2600
DENVER, CO 80202
PHONE: 303-297-2976
FAX: 303-297-2693

R-X

Sheet Revisions		
Date:	Comments	Init.

Colorado Department of Transportation
DOT
DEPARTMENT OF TRANSPORTATION
8833 South Wadsworth Court
Littleton, CO 80128
Phone: 303-972-9112 FAX: 303-972-9114
Region 6 RLB

As Constructed
No Revisions:
Revised:
Void:

CIP ARCHITECTURE DETAILS

Designer:	TJR	Structure Numbers	
Detailer:	TJR		
Sheet Subset:	WALL	Subset Sheets: W46 of W59	

Project No./Code
ES6 0852-103
17679
Sheet Number 176

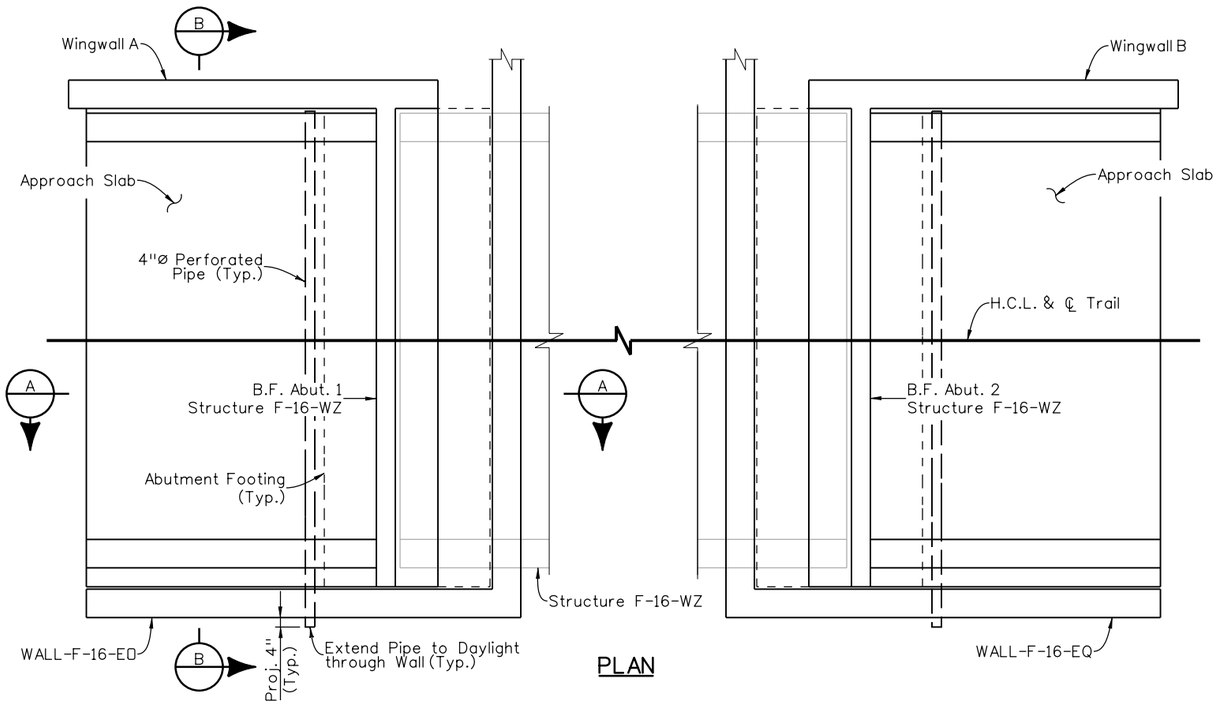

PLAN

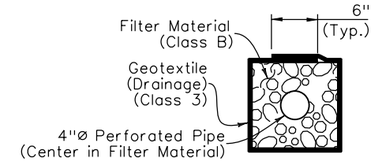

4 INCH PERFORATED PIPE UNDERDRAIN

4 Inch Perforated Pipe Underdrain includes all Filter Material (Class B) and Geotextile (Drainage) (Class A) surrounding the filter Material (Class B).

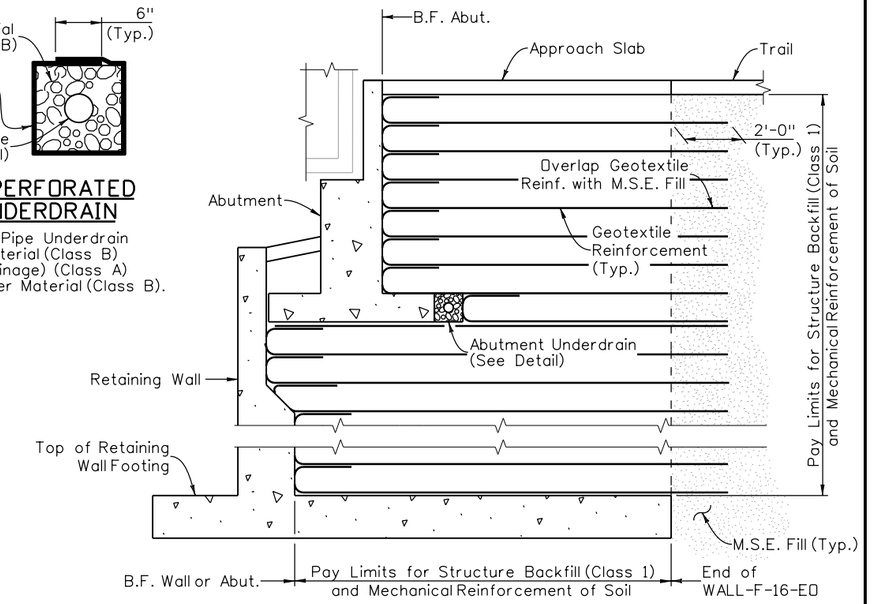

SECTION A

(WALL-F-16-EQ Similar)

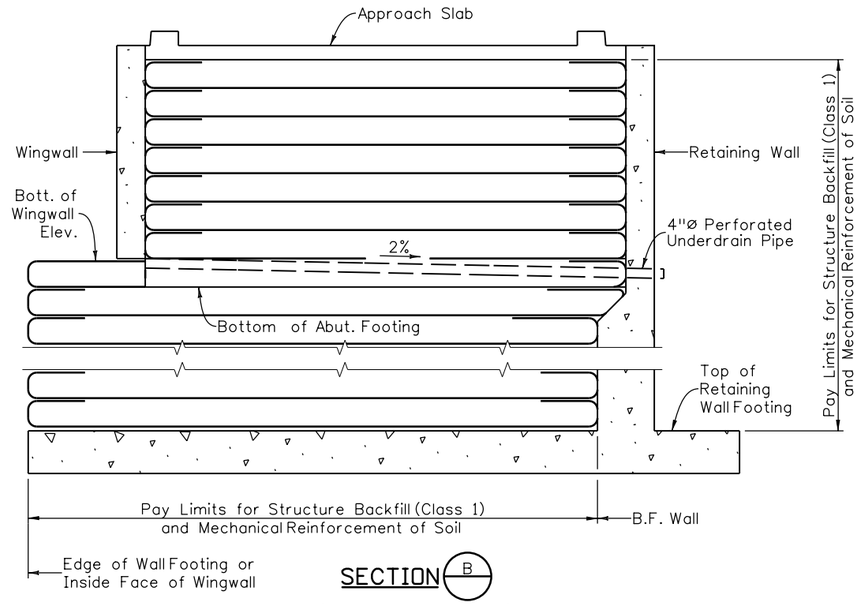

SECTION B

(WALL-F-16-EQ Similar)

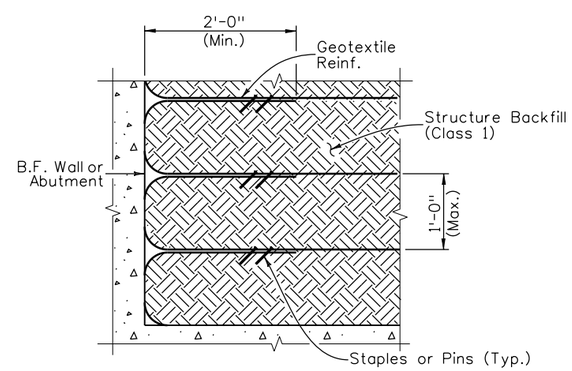

WRAP DETAIL

NOTES:

1. See Bridge Plans for abutment details.
2. Omit standard wall drains through Mechanically Stabalized Backfill.
3. At daylight location, adjust 4" diameter pipe to clear wall reinforcing as required.
4. Geotextile reinforcement shall be woven fabric with a Minimum Average Roll Value of 2400 lb/ft for installations without a gap based on ASTM D4595.
5. Geotextile Reinforcement shall be placed by alternating Machine Direction (MD) with Cross Machine Direction (XD) from layer to layer.
6. The Geotextile Reinforcement wrap at Back Face of Wall or Abutment shall be pulled back slack free with its end anchored to soil underneath with staples or pins.
7. Minimum splice of all Geofabric shall consist of 6" of overlap.
8. Payment will be made under item 206 Mechanical Reinforcement of Soil (cu.yd.) and item 206 Structure Backfill (Class 1) (cu.yd.) and shall include the cost for 4 inch Perforated Pipe Underdrain.

Design			Detail			Quantities		
	INITIAL	DATE		INITIAL	DATE		INITIAL	DATE
Designed By	BJA	12/09	Detailed By	RGA	12/09	Quantities By	TWM	12/09
Checked By	TRJ	12/09	Checked By	BJA	12/09	Checked By	JAR	12/09

DAnderson 12:38:06 PM M:\TRN\07-100-311-12\14679\Bridge\Drawings\Walls\14679_MSB_01.dgn

Print Date: 1/19/2010
File Name: 14679_MSB_01.dgn
Horiz. Scale: 1:1 Vert. Scale: As Noted
Unit Information 0224 Unit Leader MH

WILSON & COMPANY Engineers & Architects
999 18TH STREET, SUITE 2600
DENVER, CO 80202
PHONE: 303-297-2976
FAX: 303-297-2693

Sheet Revisions		
Date:	Comments	Init.

Colorado Department of Transportation
DOT DEPARTMENT OF TRANSPORTATION
8833 South Wadsworth Court
Littleton, CO 80128
Phone: 303-972-9112 FAX: 303-972-9114
Region 6 RLB

As Constructed
No Revisions:
Revised:
Void:

CIP WALL MECHANICALLY STABALIZED BACKFILL

Designer:	B. Allen	Structure Numbers	WALL-F-16-EQ
Detailer:	R. Artman		WALL-F-16-EQ
Sheet Subset:	WALL	Subset Sheets: W47 of W59	

Project No./Code
ES6 0852-103
17679
Sheet Number 177

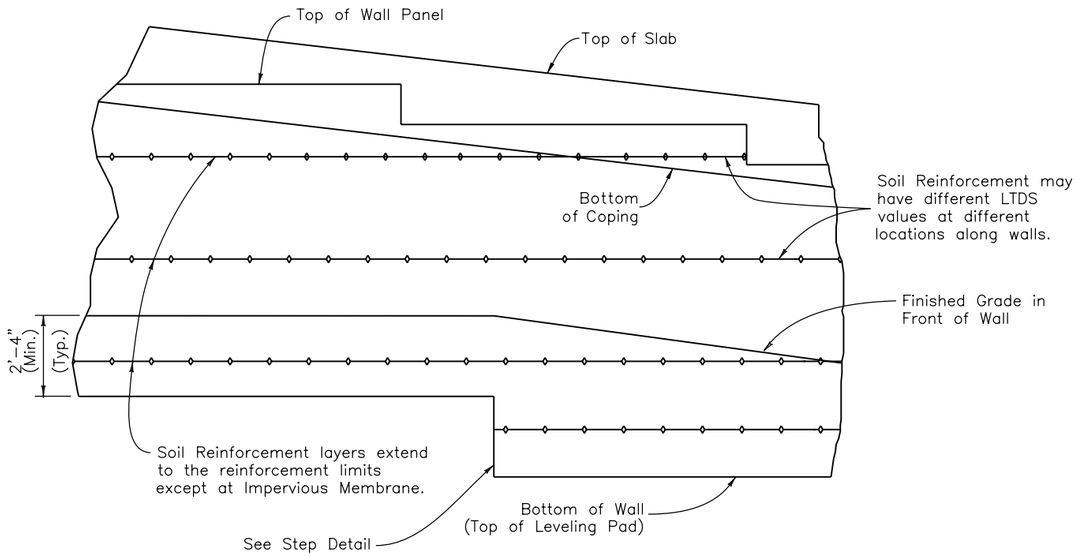

TYPICAL ELEVATION (WALL)

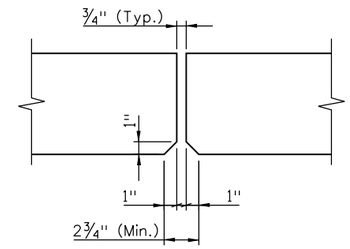

WALL PANEL JOINT DETAIL

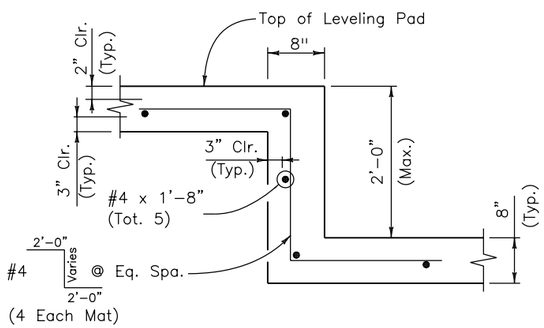

2' STEP DETAIL

(For H ≤ 2'-0")

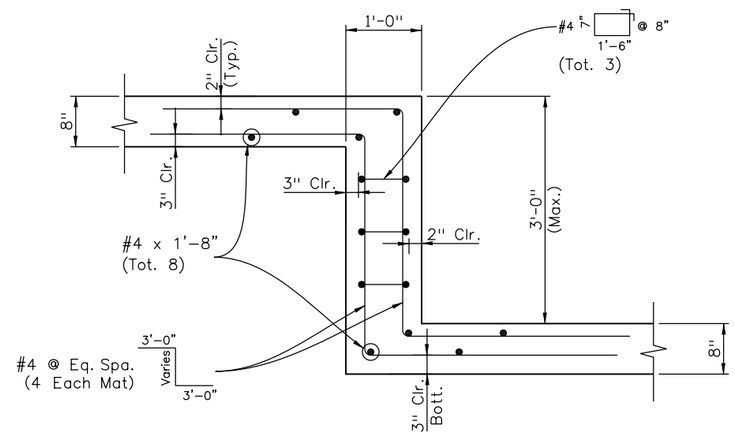

3' STEP DETAIL

(For 2'-0" < H ≤ 3'-0")

Design				Detail				Quantities			
	INITIAL	DATE		INITIAL	DATE		INITIAL	DATE		INITIAL	DATE
Designed By	JAR	01/10	Detailed By	DRA	01/10	Quantities By	AML	01/10			
Checked By	DSO	01/10	Checked By	DSO	01/10	Checked By	JAR	01/10			

Print Date: 1/19/2010
File Name: 14679_MSE_Wall_Details.dgn
Horiz. Scale: 1:1 Vert. Scale: As Noted
Unit Information 0224 Unit Leader Initials MH

WILSON & COMPANY Engineers & Architects
999 18TH STREET, SUITE 2600
DENVER, CO 80202
PHONE: 303-297-2976
FAX: 303-297-2693

Sheet Revisions		
Date:	Comments	Init.

Colorado Department of Transportation
DOT DEPARTMENT OF TRANSPORTATION
8833 South Wadsworth Court
Littleton, CO 80128
Phone: 303-972-9112 FAX: 303-972-9114
Region 6 RLB

As Constructed
No Revisions:
Revised:
Void:

MSE WALL DETAILS

Designer: J. Roberts
Detailer: D. Anderson
Sheet Subset: WALL
Structure Numbers
Subset Sheets: W48 of W59

Project No./Code
ES6 0852-103
17679
Sheet Number 178

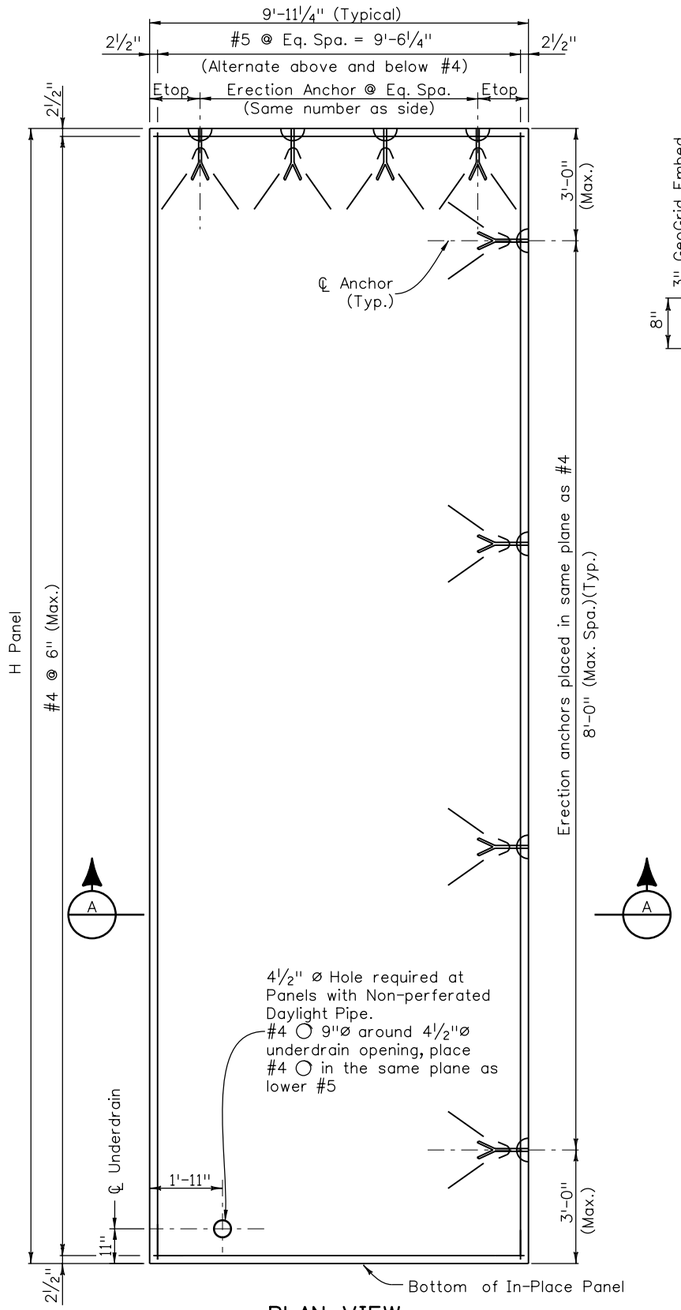

PLAN VIEW

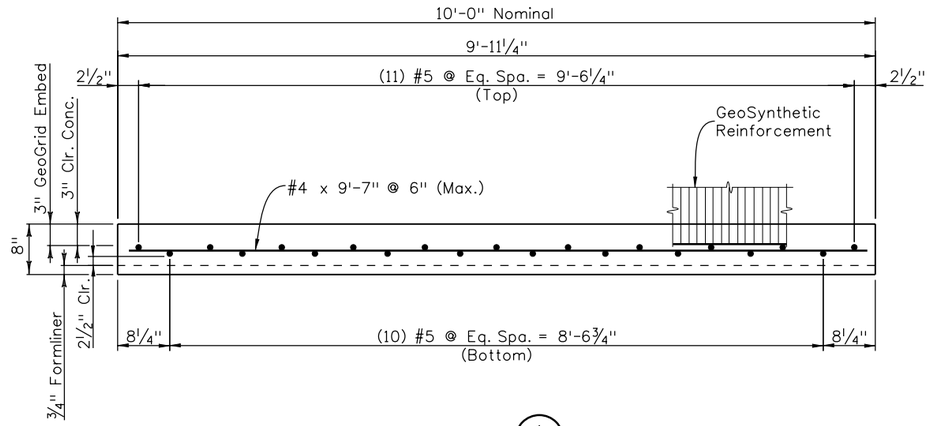

SECTION A

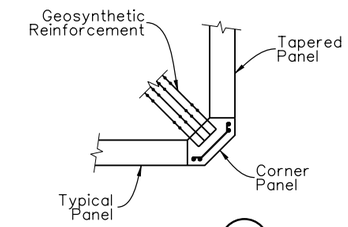

SECTION B

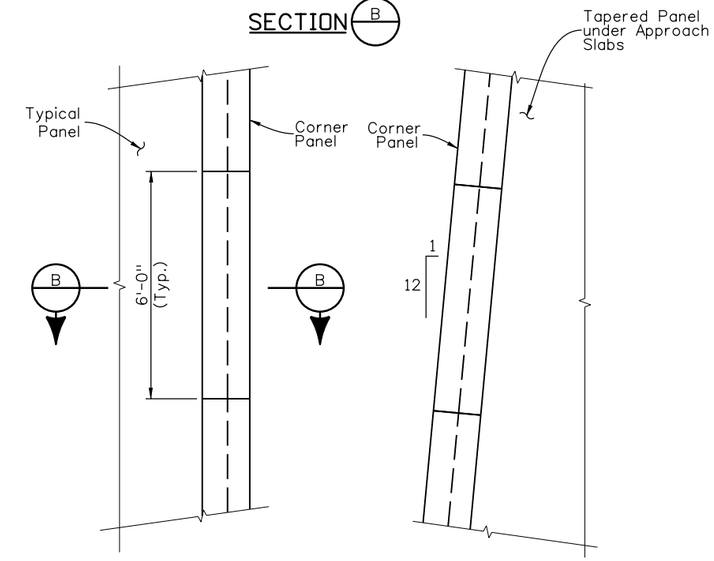

ELEVATION
(Parallel to ℄ Flyover)

ELEVATION
(Normal to ℄ Flyover)

CORNER PANEL DETAILS
For Walls E-16-EH and E-16-EN

NOTES

1. Concrete Class D f'c = 4,500 psi, f'ci = 2,500 psi.
2. All precast panel reinforcing steel shall be non-epoxy coated.
3. Panel design valid to maximum H panel = 30'-0".
4. GeoSynthetic reinforcement tabs per MSE internal design.
5. Dayton Superior/Richmond Fleet Lift P-32 Ton erection anchors or approved equal.
6. Spacing of horizontal #4 bars may be increased from 6" to 9" if Panel Casting Bed is tilted to a minimum of 60° for panel removal.
7. Panel design valid for all MSE Walls: WALL-F-16-EH, WALL-F-16-EL, WALL-F-16-EM, WALL-F-16-EN, and WALL-F-16-EP.
8. Panels behind Pier 1 and Pier 13 and under approach slab of Structure F-16-YE (Flyover Bridge) are vertical. All other panels are battered at 12 vertical to 1 horizontal. Panels under approach slab require a taper along side adjacent to corner panels.
9. Bevel and taper vertical edge of panels as required to provide an acceptable gap between panels at horizontal breaks in alignment.
10. MSE Wall Panel reinforcement steel is to be included in Item No. 504 Precast Panel

ERECTION ANCHORS			
Panel Height	Side of Panel (Number) Size	Top of Panel (Number) Size	Etop
H ≤ 14'	(2) 4 Ton	(2) 4 Ton	2'-0"
14' < H ≤ 30'	(4) 4 Ton	(4) 4 Ton	1'-4"

Quantities			
	INITIAL	DATE	
Quantities By	AML	01/10	
Checked By	JAR	01/10	

Detail			
	INITIAL	DATE	
Detailed By	DRA	01/10	
Checked By	DSO	01/10	

Design			
	INITIAL	DATE	
Designed By	JAR	01/10	
Checked By	DSO	01/10	

Print Date: 1/19/2010
File Name: 14679_MSE_Wall_Panel_Details.dgn
Horiz. Scale: 1:1 Vert. Scale: As Noted
Unit Information 0224 Unit Leader Initials MH

WILSON & COMPANY Engineers & Architects
999 18TH STREET, SUITE 2600
DENVER, CO 80202
PHONE: 303-297-2976
FAX: 303-297-2993

Sheet Revisions		
Date:	Comments	Init.

Colorado Department of Transportation
8833 South Wadsworth Court
Littleton, CO 80128
Phone: 303-972-9112 FAX: 303-972-9114
Region 6 RLB

As Constructed
No Revisions:
Revised:
Void:

MSE WALL PANEL DETAILS
Designer: J. Roberts
Detailer: D. Anderson
Sheet Subset: WALL
Structure Numbers
Subset Sheets: W49 of W59

Project No./Code
ES6 0852-103
17679
Sheet Number 179

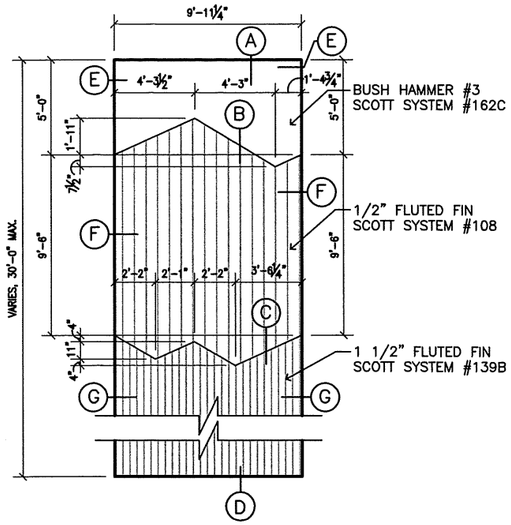

PANEL 1

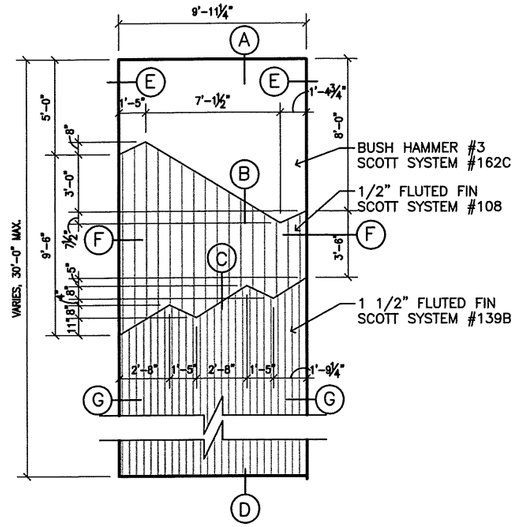

PANEL 2

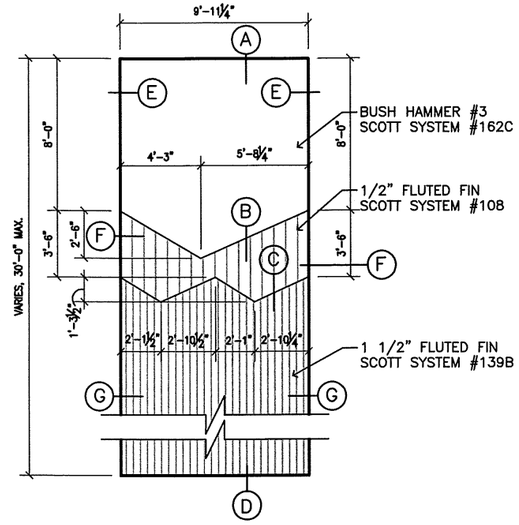

PANEL 3

GENERAL NOTES:

1. ALL FORM LINER FOR THIS PRECAST ARE BY SCOTT SYSTEMS INC. DENVER COLORADO OR APPROVED EQUAL.
2. SEE SHEET W51 FOR ALL PRECAST CONCRETE DETAILS
3. ALL EXPOSED SURFACES (WHEN INSTALLED) OF THE PRECAST PANELS ARE TO RECEIVE STRUCTURAL CONCRETE STAIN..
4. STRUCTURAL CONCRETE STAIN COLOR SHALL MATCH C-470 (LIGHTER COLOR) OR AS DIRECTED BY THE PROJECT ENGINEER.
5. SEE STRUCTURAL DRAWINGS FOR ADDITION INFORMATION.
6. ADJUST THE HEIGHT OF THE PANELS BY ADJUSTING THE LOCATION OF THE BOTTOM FORM. DO NOT CHANGE THE POSITION OF THE TOP FORM.
7. PANELS 1, 2, 3, & 4 SHALL BE USED FOR WALL F-16-EH. PANEL 5 SHALL BE USED FOR ALL OTHER MSE WALLS.

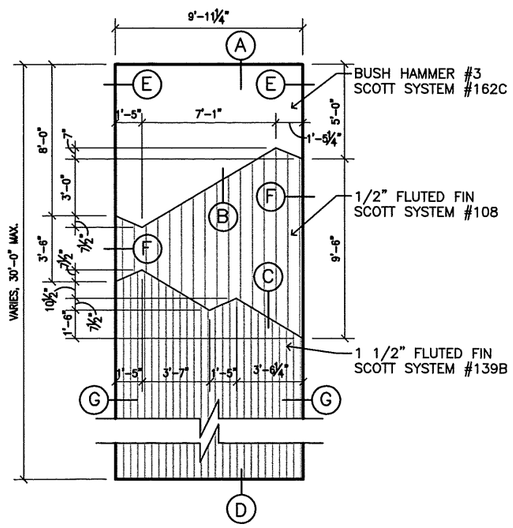

PANEL 4

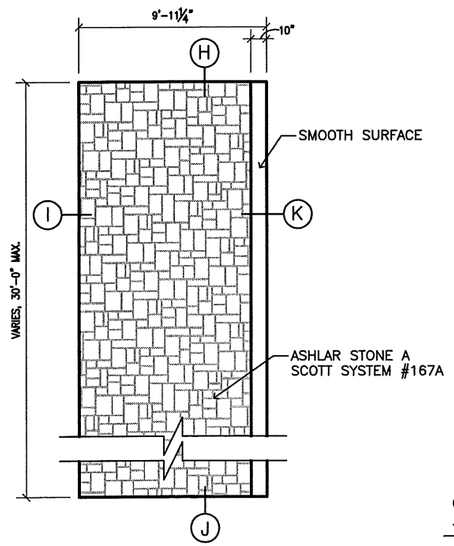

PANEL 5

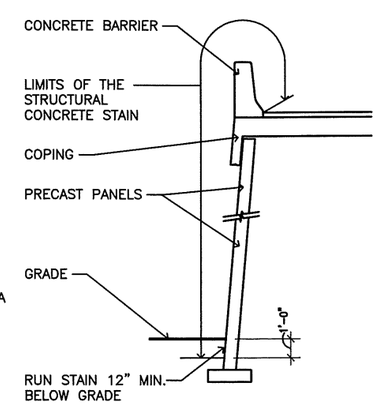

STRUCTURAL CONC. STAIN

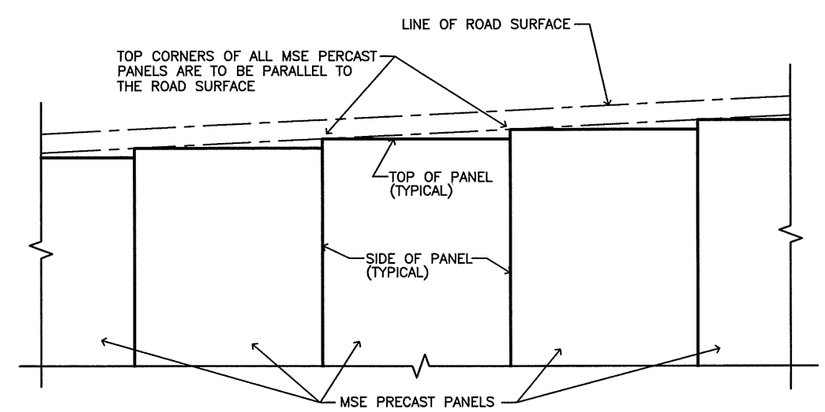

NOTE: THE TOP OF ALL MSE PANELS ARE TO HAVE A UNIFORM STEP AT EACH PANEL JOINT (PARALLEL TO THE ROAD SURFACE)

TYPICAL PANEL LAYOUT

Design			Detail			Quantities		
	INITIAL	DATE		INITIAL	DATE		INITIAL	DATE
Designed By	TJR	12/09	Detailed By	XXX	MM/YY	Quantities By	XXX	MM/YY
Checked By	TJR	12/09	Checked By	XXX	MM/YY	Checked By	XXX	MM/YY

Print Date: 1-19-10
File Name: .
Horiz. Scale: 1/8" = 1'-0" Vert. Scale: N/A
Unit Information Unit Leader Initials

WILSON & COMPANY Engineers & Architects
999 18TH STREET, SUITE 2600
DENVER, CO 80202
PHONE: 303-297-2976
FAX: 303-297-2693

R-X

Sheet Revisions		
Date:	Comments	Init.

Colorado Department of Transportation
DOT DEPARTMENT OF TRANSPORTATION
8833 South Wadsworth Court
Littleton, CO 80128
Phone: 303-972-9112 FAX: 303-972-9114
Region 6 RLB

As Constructed
No Revisions:
Revised:
Void:

MSE WALL ARCHITECTURE
PRECAST CONC. PANELS
DETAILS (1 OF 2)

Designer:	TJR	Structure Numbers	
Detailer:	TJR		
Sheet Subset:	WALL	Subset Sheets:	W50 of W59

Project No./Code
ES6 0852-103
17679
Sheet Number 180

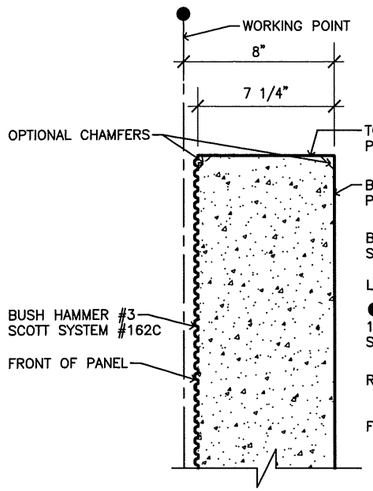

DETAIL A

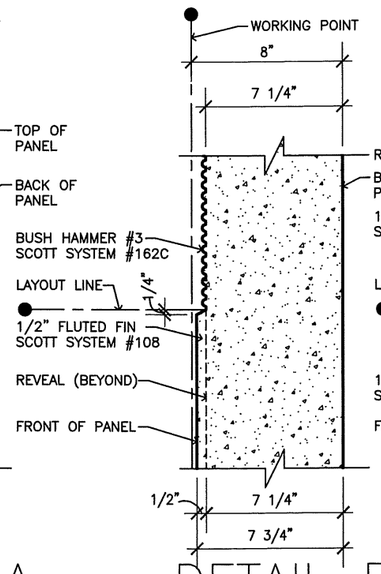

DETAIL B

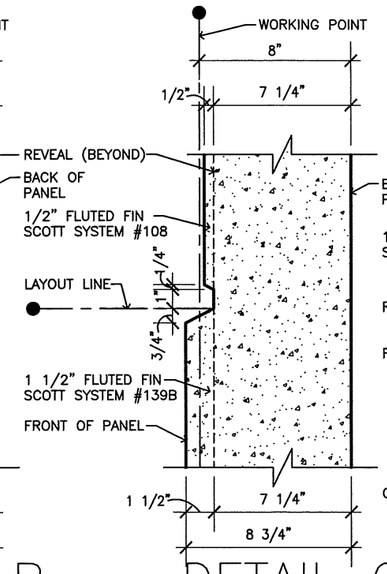

DETAIL C

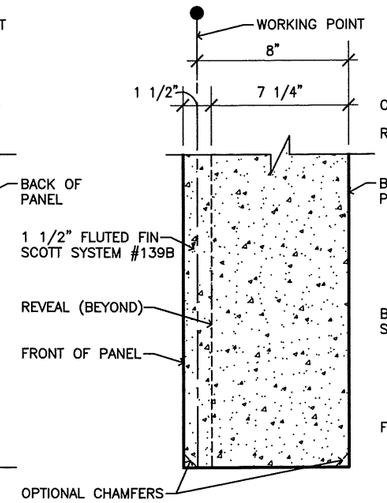

DETAIL D

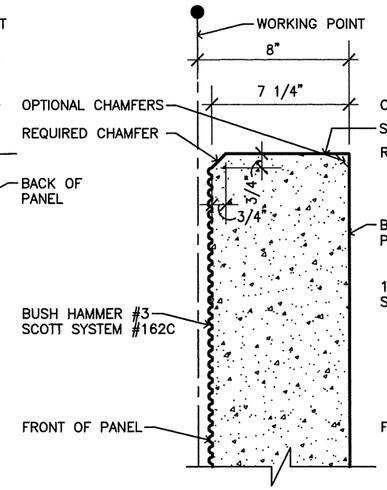

DETAIL E

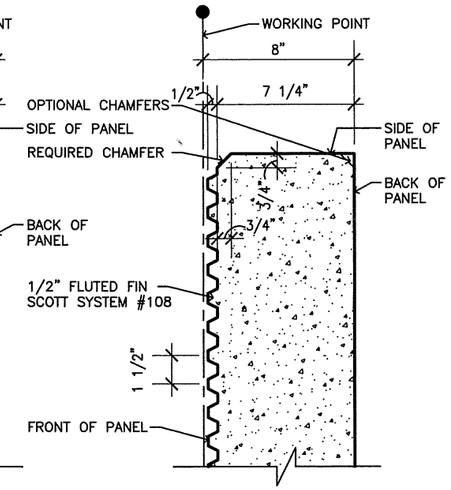

DETAIL F

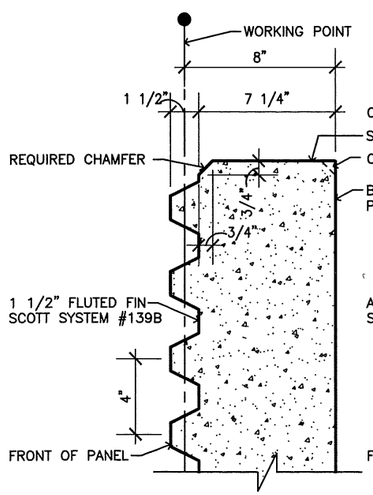

DETAIL G

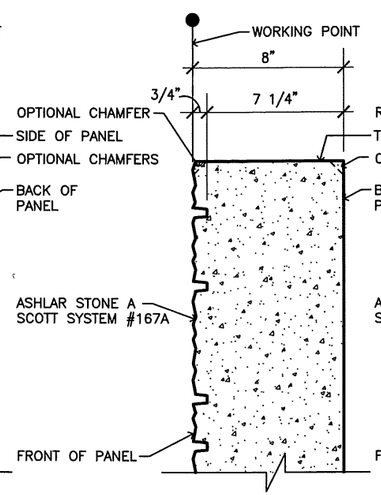

DETAIL H

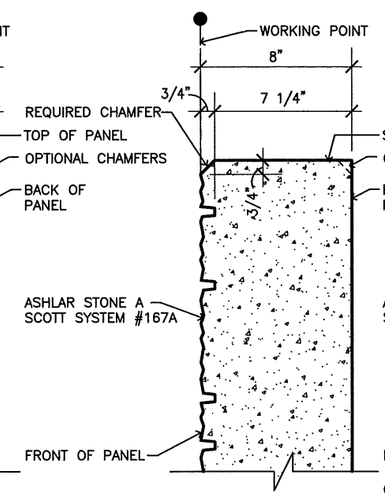

DETAIL I

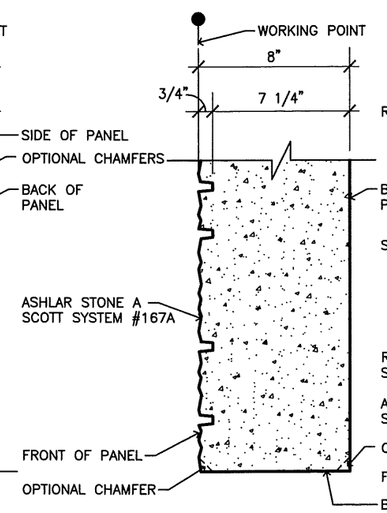

DETAIL J

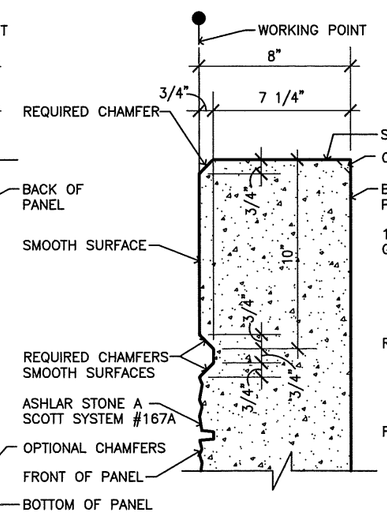

DETAIL K

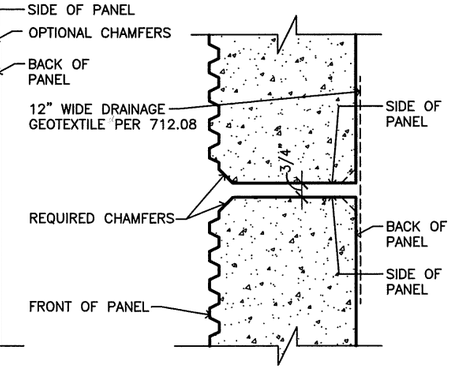

TYPICAL JOINT

Design			Detail			Quantities		
	INITIAL	DATE		INITIAL	DATE		INITIAL	DATE
Designed By	TJR	12/09	Detailed By	XXX	MM/YY	Quantities By	XXX	MM/YY
Checked By	TJR	12/09	Checked By	XXX	MM/YY	Checked By	XXX	MM/YY

Print Date: 1-19-10
File Name: .
Horiz. Scale: 1 1/2' = 1'-0" Vert. Scale: N/A
Unit Information Unit Leader Initials

WILSON & COMPANY Engineers & Architects
999 18TH STREET, SUITE 2600
DENVER, CO 80202
PHONE: 303-297-2976
FAX: 303-297-2693

R-X

Sheet Revisions		
Date:	Comments	Init.

Colorado Department of Transportation
DOT
DEPARTMENT OF TRANSPORTATION
8833 South Wadsworth Court
Littleton, CO 80128
Phone: 303-972-9112 FAX: 303-972-9114
Region 6 RLB

As Constructed
No Revisions:
Revised:
Void:

MSE WALL ARCHITECTURE
PRECAST CONC. DETAILS
DETAILS (2 OF 2)

Designer: TJR
Detailer: TJR
Structure Numbers
Sheet Subset: WALL
Subset Sheets: W51 of W59

Project No./Code
ES6 0852-103
17679
Sheet Number 181

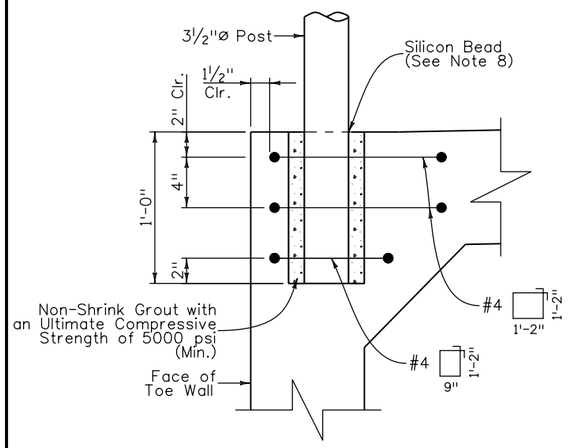

ELEVATION
(without curb)

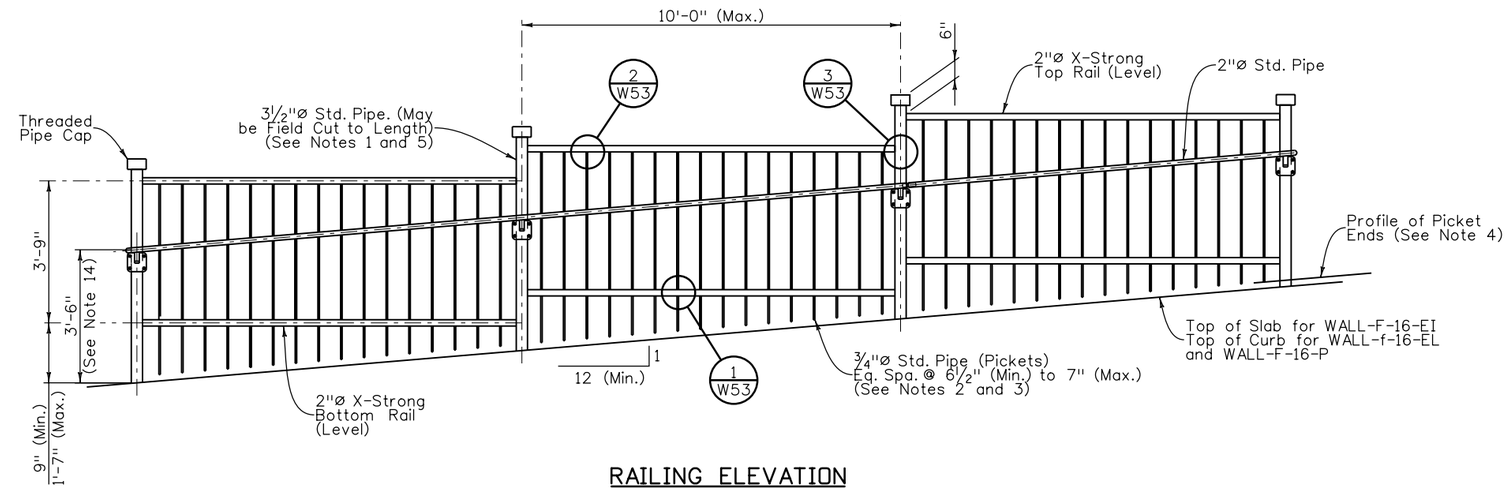

RAILING ELEVATION

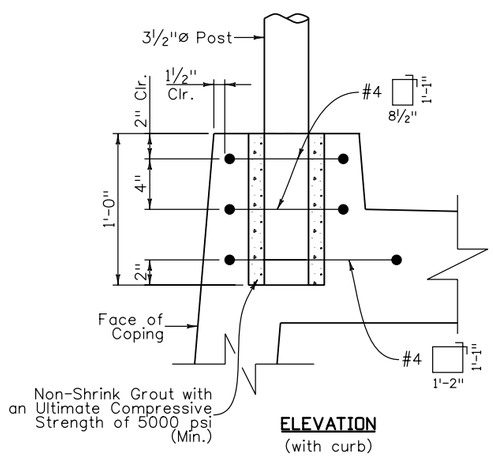

ELEVATION
(with curb)

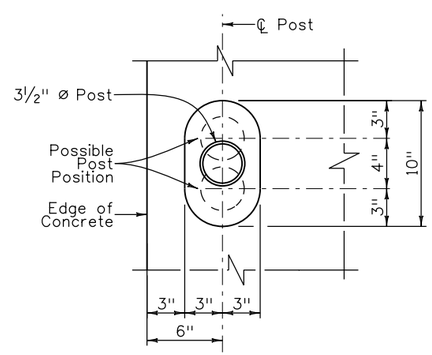

PLAN

POCKET CONNECTION
(Trail slab bars not shown for clarity)

NOTES:

1. All railing panels shall be shop fabricated.
2. Pickets may be field cut to length as approved by the Engineer.
3. Seal picket ends with threaded pipe caps when not installed next to a curb. Field cut ends, without pipe caps, shall be ground smooth to preclude personal injury to the general public.
4. Profile of picket ends shall be parallel to finished grade and shall extent 3" (min.) below ℄ bottom rail. The profile shall also be 2" (min.) to 6" (max.) above the concrete surface.
5. All pipe shall meet the requirements in ASTM A53 for Grade B steel and all plates and bars shall meet the requirements in AASHTO M270 for Grade 36 steel.
6. Concrete (Class D) shall be used to support rail posts.
7. Posts shall be installed in a properly reinforced slab.
8. Place silicon bead around pipe at the pipe-concrete interface.
9. Holes in rails, for pickets, and holes in posts, for pins, shall be drilled.
10. Railing components shall be galvanized in accordance with ASTM A123.
11. Railing will be paid for, by the linear foot, as Item 514 Pipe Railing.
12. Railing accommodates pedestrians and bicycles in accordance with the 16th edition of the AASHTO Standard Specifications For Highway Bridges.
13. Pipe Railing Extents:
    WALL-F-16-EI
    Begin ℄ Trail Sta. 101+80.32, Offset = 7.50' Lt.
    End ℄ Trail Sta. 105+38.32, Offset = 7.50' Lt.
    WALL-F-16-EL
    Begin ℄ Trail Sta. 118+74.83, Offset = 7.50' Rt.
    End ℄ Trail Sta. 119+94.80, Offset = 7.50' Rt.
    WALL-F-16-EP
    Begin ℄ Trail Sta. 115+51.86, Offset = 7.50' Rt.
    End ℄ Trail Sta. 117+31.83, Offset = 7.50' Rt.
14. Height of rub rail is measured from top of slab for WALL-F-16-EI and from top of trail for WALL-F-16-EL and WALL-F-16-EP.

Design			Detail			Quantities		
	INITIAL	DATE		INITIAL	DATE		INITIAL	DATE
Designed By	JAR	01/10	Detailed By	DRA	01/10	Quantities By	AML	01/10
Checked By	DSO	01/10	Checked By	DSO	01/10	Checked By	JAR	01/10

DAnderson 12:40:22 PM M:\TRN\07-100-311-12\14679\Bridge\Drawings\Walls\14679_PipeRailing_Details_01.dgn

Print Date: 1/19/2010
File Name: 14679_PipeRailing_Details_01.dgn
Horiz. Scale: 1:1 Vert. Scale: As Noted
Unit Information 0224 Unit Leader Initials MH

WILSON & COMPANY Engineers & Architects
999 18TH STREET, SUITE 2600
DENVER, CO 80202
PHONE: 303-297-2976
FAX: 303-297-2693

Sheet Revisions		
Date:	Comments	Init.

Colorado Department of Transportation
DOT DEPARTMENT OF TRANSPORTATION
8833 South Wadsworth Court
Littleton, CO 80128
Phone: 303-972-9112 FAX: 303-972-9114
Region 6 RLB

As Constructed
No Revisions:
Revised:
Void:

PIPE RAILING DETAILS (1 OF 2)

Designer: J. Roberts
Detailer: D. Anderson
Sheet Subset: WALL
Structure Numbers
Subset Sheets: W52 of W59

Project No./Code
ES6 0852-103
17679
Sheet Number 182

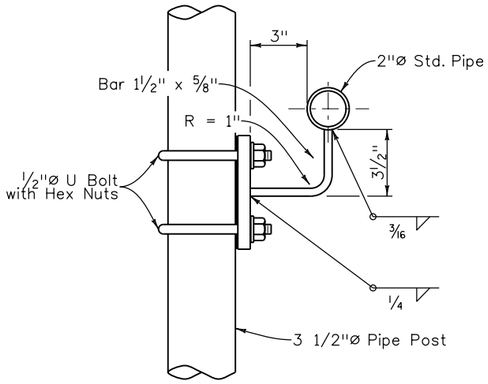

PARTIAL SECTION

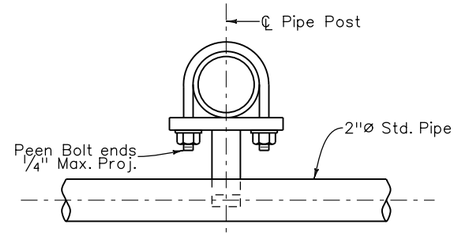

PARTIAL PLAN

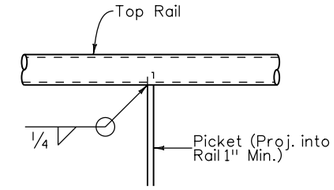

DETAIL 2/W52

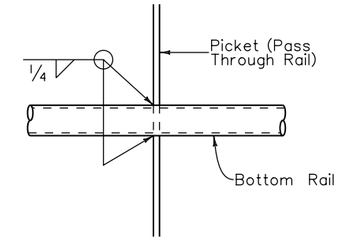

DETAIL 1/W52

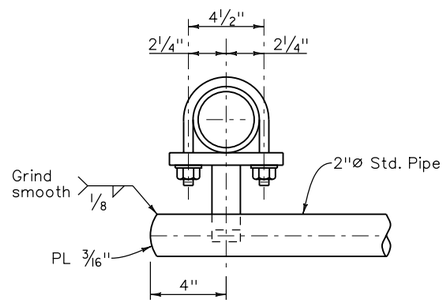

END OF RAIL PLAN

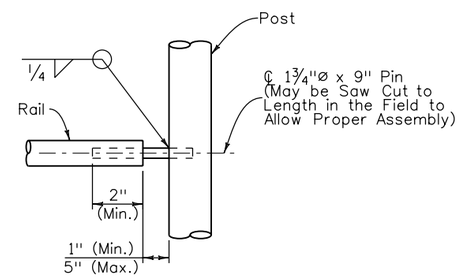

DETAIL 3/W52

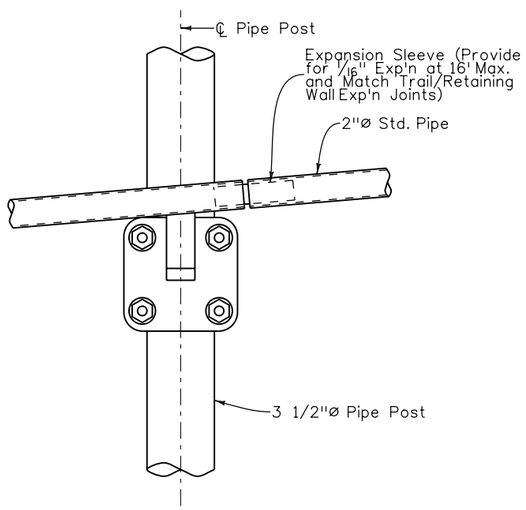

EXPANSION SLEEVE DETAIL

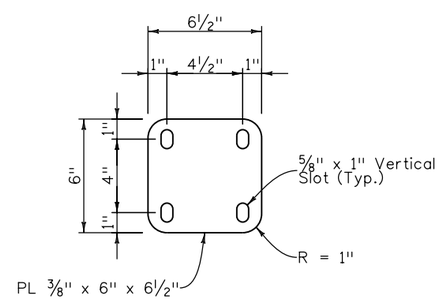

CONNECTION PLATE DETAIL

Quantities			
	INITIAL	DATE	
Quantities By	AML	01/10	
Checked By	JAR	01/10	

Detail			
	INITIAL	DATE	
Detailed By	DRA	01/10	
Checked By	DSO	01/10	

Design			
	INITIAL	DATE	
Designed By	JAR	01/10	
Checked By	DSO	01/10	

DAnderson 12:40:54 PM M:\TRN\07-100-311-12\14679\Bridge\Drawings\Walls\14679_PipeRailing_Details_02.dgn

Print Date: 1/19/2010
File Name: 14679_PipeRailing_Details_02.dgn
Horiz. Scale: 1:1 Vert. Scale: As Noted
Unit Information 0224 Unit Leader Initials MH

WILSON & COMPANY Engineers & Architects
999 18TH STREET, SUITE 2800
DENVER, CO 80202
PHONE: 303-297-2976
FAX: 303-297-2893

Sheet Revisions

Date:	Comments	Init.

Colorado Department of Transportation
DOT DEPARTMENT OF TRANSPORTATION
8833 South Wadsworth Court
Littleton, CO 80128
Phone: 303-972-9112 FAX: 303-972-9114
Region 6 RLB

As Constructed
No Revisions:
Revised:
Void:

PIPE RAILING DETAILS (2 OF 2)

Designer: J. Roberts
Detailer: D. Anderson
Sheet Subset: WALL
Structure Numbers
Subset Sheets: W53 of W59

Project No./Code
ES6 0852-103
17679
Sheet Number 183

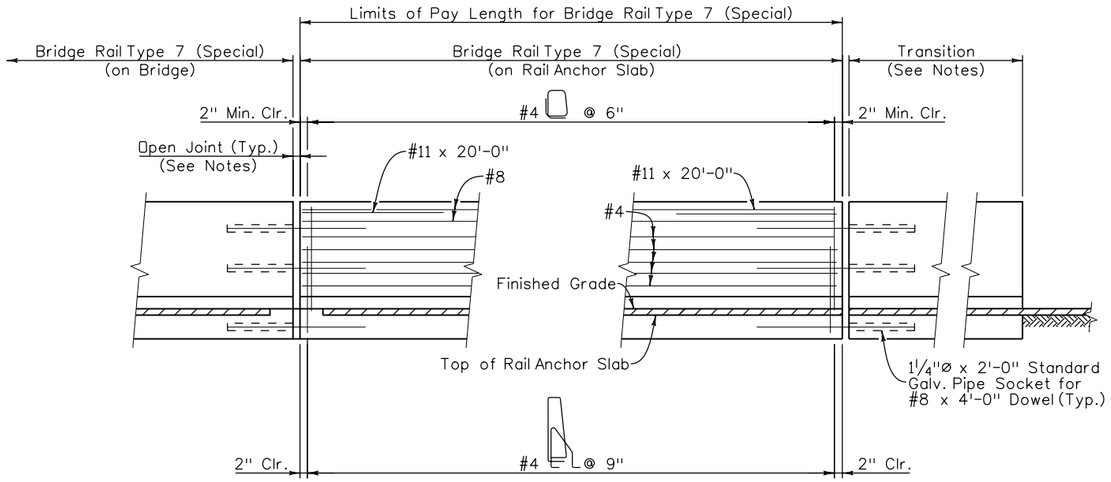

ELEVATION

TRANSITION TO CONNECT
BRIDGE RAIL TYPE 7 (SPECIAL)
TO GUARD RAIL

NOTES:

1. All bridge rail concrete shall be Class D (Bridge), f'c = 4,500 psi.
2. Longitudinal reinforcement shall stop at all expansion joints.
3. Bridge rail shall be constructed plumb.
4. Concrete and reinforcing steel shall conform to the requirements of Sections 601 and 602 of the Standard Specifications. Payment will be made under Item 606, Bridge Rail Type 7 (Special).
5. The surface of the rail shall be tested with a 10 foot straight edge laid along the surface in the longitudinal direction. Deviation of the concrete surface from the straight edge shall be less than ¼" plus allowance for roadway horizontal and vertical curvature, if any.
6. Provide open joint in Bridge Rail to match location and width of any joint in the supporting slab. See Slab Joint Details for treatment of any Expansion Devices or joint sealants at the Bridge Rail.
7. See Roadway Plans for transition to Guardrail Style CA (Special).
8. See Lignting Plans for conduit locations and quantities.
9. In-barrier LED lights shall be located a minimum of 20'-0" from the edge of a drain, the end of rail, or an open joint.
10. #8 bars shall be mechanically spliced to maintain clearances. Mechanical splices shall be included in the work.
11. #11 x 21'-0" are required at the end of rail and adjacent to any open joint.
12. Rotate hooks and field bend bars to maintain clearances.

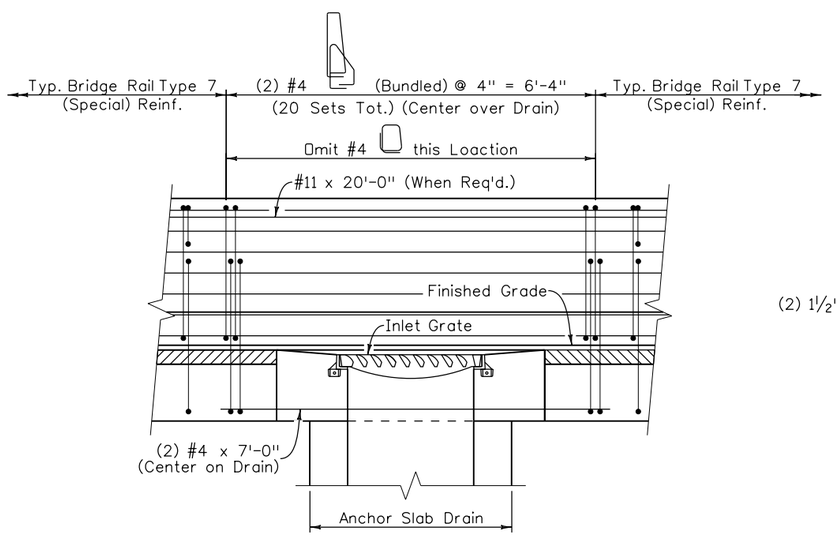

TYPICAL ELEVATION
AT ANCHOR SLAB DRAIN

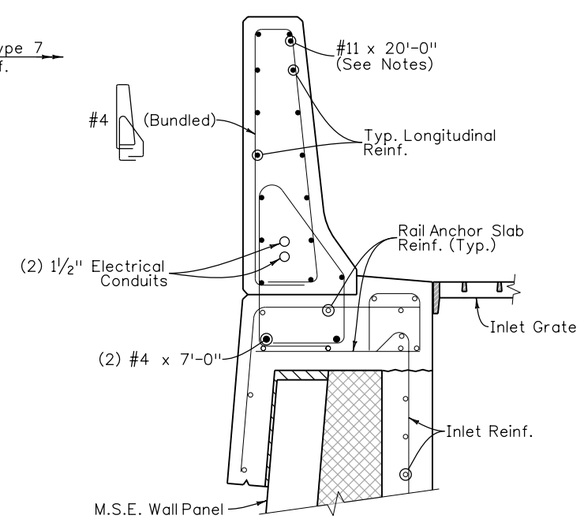

TYPICAL SECTION
AT ANCHOR SLAB DRAIN

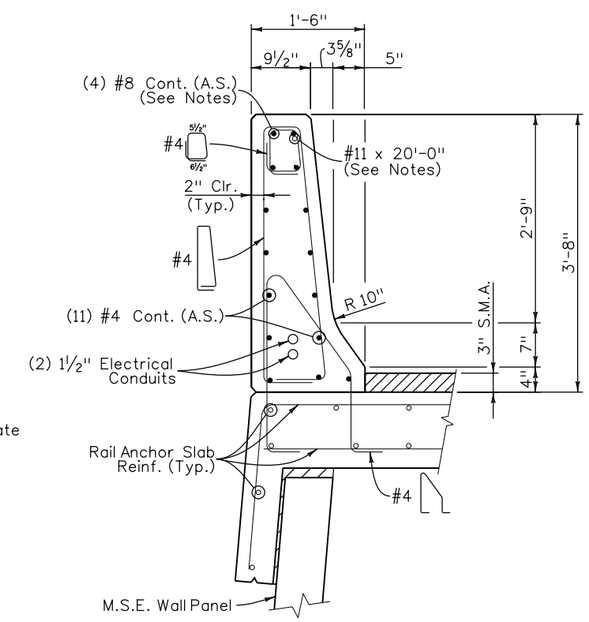

TYPICAL SECTION

Design			Detail			Quantities		
	INITIAL	DATE		INITIAL	DATE		INITIAL	DATE
Designed By	MMM	10/09	Detailed By	RGA	10/09	Quantities By	TRJ	10/09
Checked By	AML	10/09	Checked By	AML	10/09	Checked By	JSM	10/09

DAnderson 12:41:32 PM M:\TRN\07-100-311-12\14679\Bridge\Drawings\Walls\14679_BridgeRailType7(Special)_01.dgn

Print Date: 1/19/2010
File Name: 14679_BridgeRailType7(Special)_01.dgn
Horiz. Scale: 1:1 Vert. Scale: As Noted
Unit Information 0224 Unit Leader MH

WILSON & COMPANY Engineers & Architects
999 18TH STREET, SUITE 2600
DENVER, CO 80202
PHONE: 303-297-2976
FAX: 303-297-2693

Sheet Revisions		
Date:	Comments	Init.

Colorado Department of Transportation
DOT DEPARTMENT OF TRANSPORTATION
8833 South Wadsworth Court
Littleton, CO 80128
Phone: 303-972-9112 FAX: 303-972-9114
Region 6 RLB

As Constructed
No Revisions:
Revised:
Void:

BRIDGE RAIL TYPE 7 (SPECIAL)
(1 OF 3)

Designer: M. McMullen
Detailer: A. Leifheit
Sheet Subset: WALL
Structure Numbers
Subset Sheets: W54 of W59

Project No./Code
ES6 0852-103
17679
Sheet Number 184

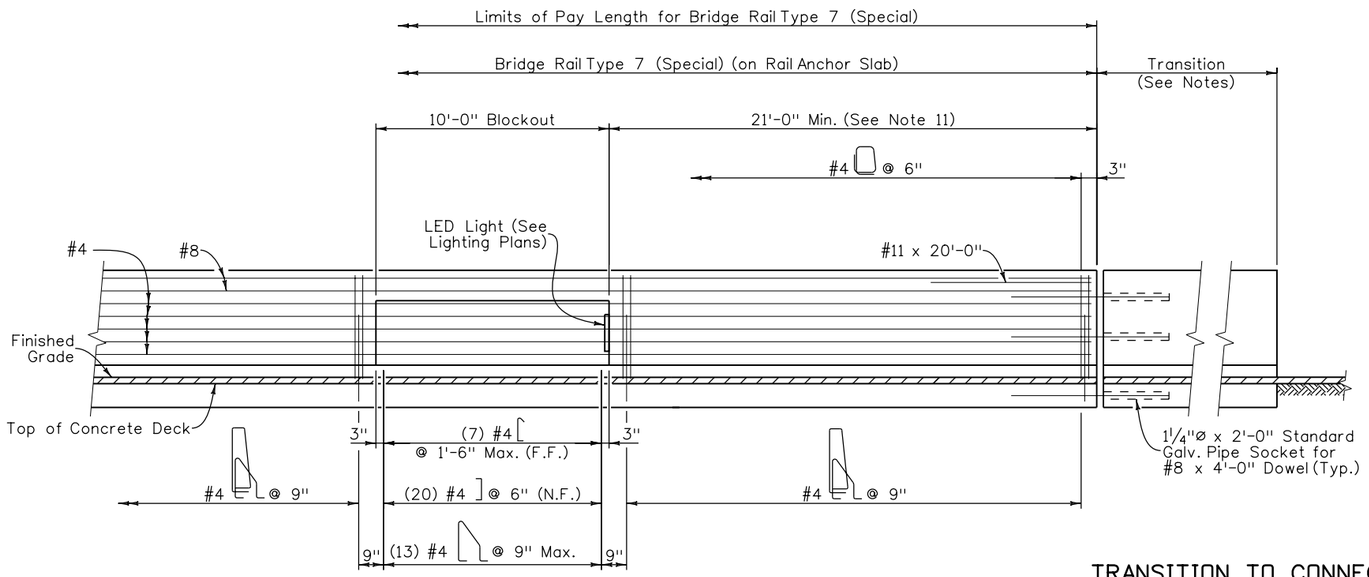

ELEVATION

(Showing Barrier Mounted LED Luminaire)

TRANSITION TO CONNECT BRIDGE RAIL TYPE 7 (Special) TO GUARD RAIL

NOTES:

1. All bridge rail concrete shall be Class D (Bridge), f'c = 4,500 psi.
2. Longitudinal reinforcement shall stop at all expansion joints.
3. Bridge rail shall be constructed plumb.
4. Concrete and reinforcing steel shall conform to the requirements of Sections 601 and 602 of the Standard Specifications. Payment will be made under Item 606, Bridge Rail Type 7 (Special).
5. The surface of the rail shall be tested with a 10 foot straight edge laid along the surface in the longitudinal direction. Deviation of the concrete surface from the straight edge shall be less than ¼" plus allowance for roadway horizontal and vertical curvature, if any.
6. Provide open joint in Bridge Rail to match location and width of any joint in the supporting slab. See Slab Joint Details for treatment of any Expansion Devices or joint sealants at the Bridge Rail.
7. See Roadway Plans for transition to Guardrail Style CA (Special).
8. See Lignting Plans for conduit locations and quantities.
9. In-barrier LED lights shall be located a minimum of 20'-0" from the edge of a drain, the end of rail, or an open joint.
10. #8 bars shall be mechanically spliced to maintain clearances. Mechanical splices shall be included in the work.
11. #11 x 20'-0" are required at the end of rail and adjacent to any open joint.
12. Rotate hooks and field bend bars to maintain clearances.

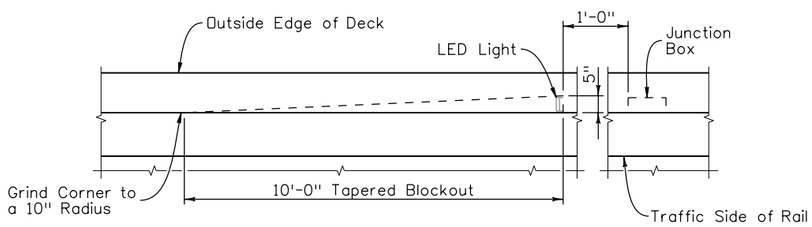

PLAN

(At LED Blockout)

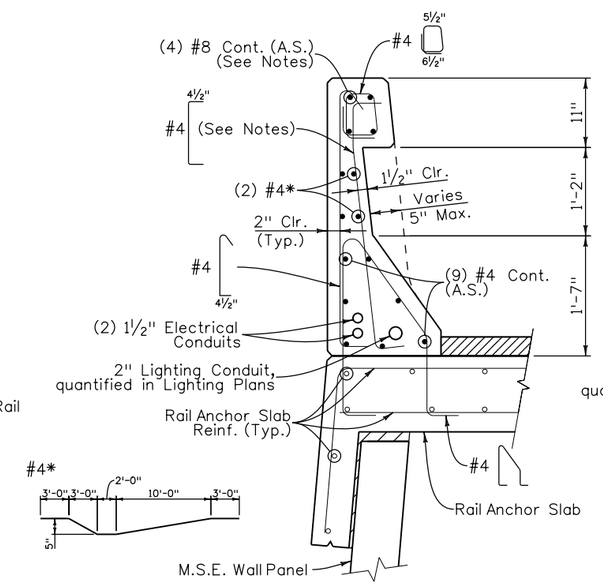

TYPICAL SECTION

(Rail at Blockout and Taper)

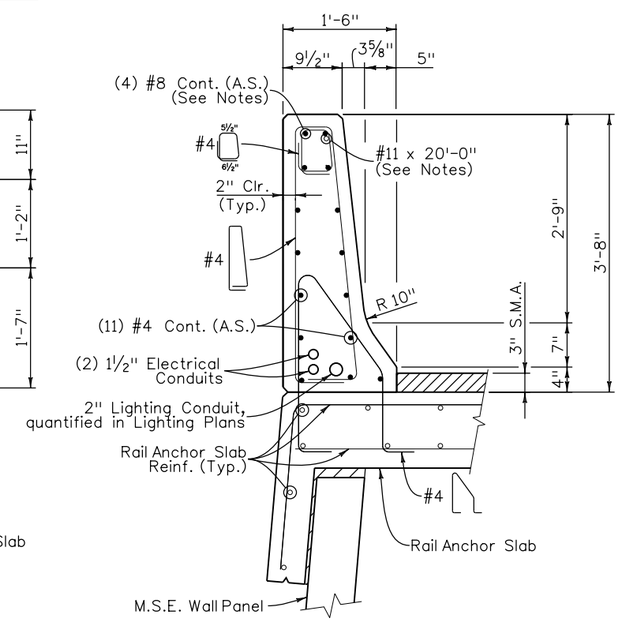

TYPICAL SECTION

Design				Detail				Quantities			
	INITIAL	DATE		INITIAL	DATE		INITIAL	DATE		INITIAL	DATE
Designed By	MMM	10/09	Detailed By	RGA	10/09	Quantities By	TRJ	10/09			
Checked By	AML	10/09	Checked By	AML	10/09	Checked By	JSM	10/09			

DAnderson 12:41:52 PM M:\TRN\07-100-311-12\14679\Bridge\Drawings\Walls\14679_BridgeRailType7(Special)_02.dgn

Print Date: 1/19/2010	Sheet Revisions			As Constructed	BRIDGE RAIL TYPE 7 (SPECIAL) (2 OF 3)
File Name: 14679_BridgeRailType7(Special)_02.dgn	Date:	Comments	Init.	No Revisions:	Designer: M. McMullen
Horiz. Scale: 1:1 Vert. Scale: As Noted				Revised:	Detailer: A. Leifheit
Unit Information 0224 Unit Leader MH				Void:	Sheet Subset: WALL
WILSON & COMPANY Engineers & Architects 999 18TH STREET, SUITE 2600 DENVER, CO 80202 PHONE: 303-297-2976 FAX: 303-297-2693					Structure Numbers / Subset Sheets: W55 of W59

Colorado Department of Transportation
8833 South Wadsworth Court
Littleton, CO 80128
Phone: 303-972-9112 FAX: 303-972-9114
Region 6 RLB

Project No./Code: ES6 0852-103
17679
Sheet Number 185

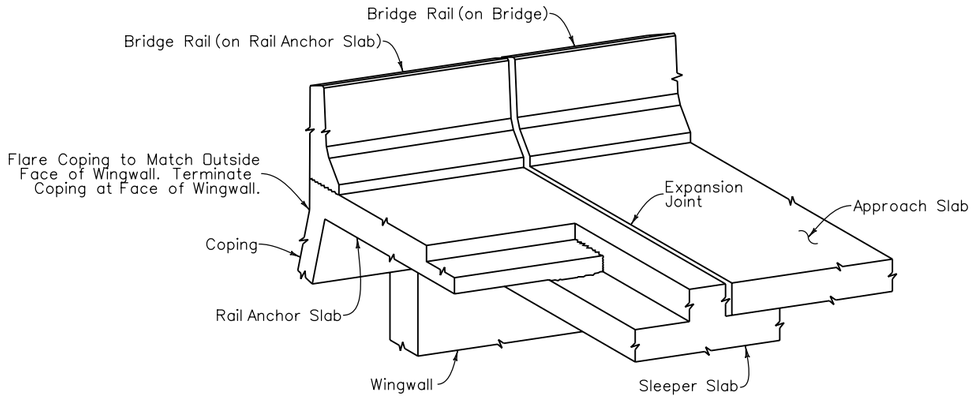

ISOMETRIC VIEW

(WALL-F-16-EM to Structure F-16-WY)

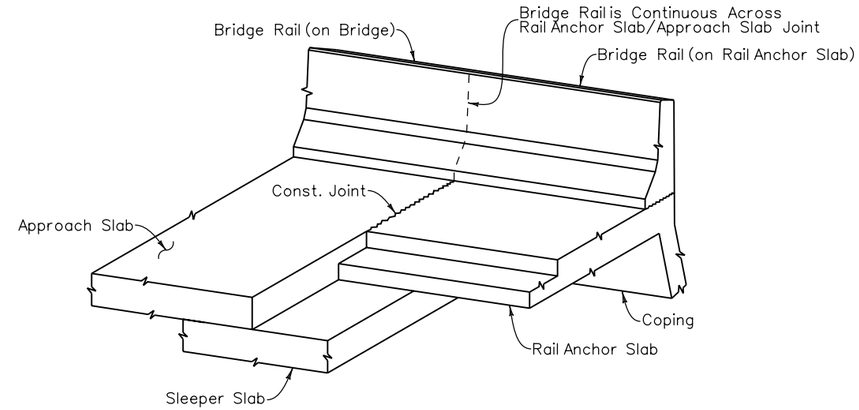

ISOMETRIC VIEW

(WALL-F-16-EH and WALL-F-16-EN to Structure F-16-YE)

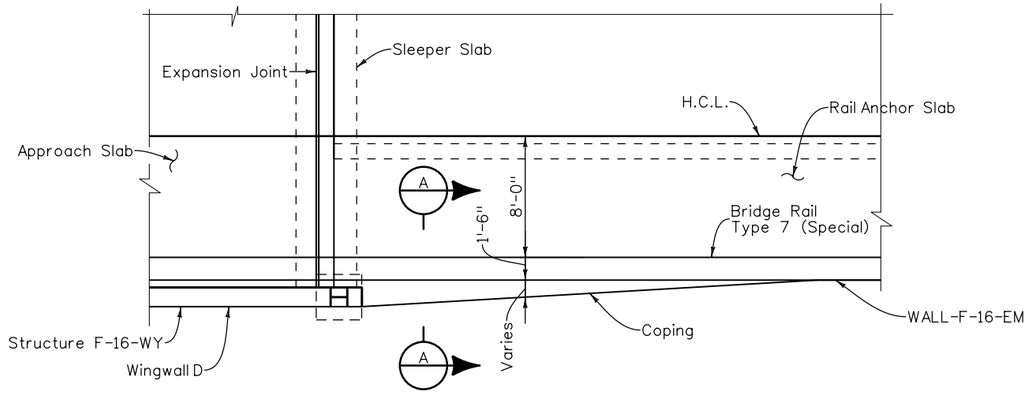

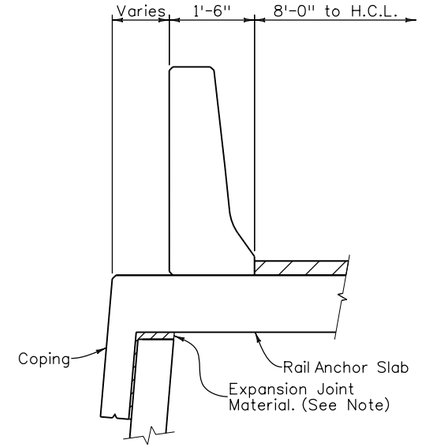

SECTION A

NOTE:

Provide ½" expansion joint material between coping and face of wingwall.

Design				Detail				Quantities		
	INITIAL	DATE		INITIAL	DATE		INITIAL	DATE
Designed By	AML	10/09	Detailed By	RGA	10/09	Quantities By	TRJ	10/09
Checked By	AML	10/09	Checked By	AML	10/09	Checked By	JSM	10/09

DAnderson 12:42:13 PM M:\TRN\07-100-311-12\14679\Bridge\Drawings\Walls\14679_BridgeRailType7(Special)_03.dgn

Print Date: 1/19/2010	Sheet Revisions	Colorado Department of Transportation	As Constructed
File Name: 14679_BridgeRailType7(Special)_03.dgn	Date: / Comments / Init.	8833 South Wadsworth Court Littleton, CO 80128 Phone: 303-972-9112 FAX: 303-972-9114	No Revisions:
Horiz. Scale: 1:1 Vert. Scale: As Noted		Region 6 RLB	Revised:
Unit Information 0224 Unit Leader MH			Void:
WILSON & COMPANY Engineers & Architects — 999 18TH STREET, SUITE 2600 DENVER, CO 80202 PHONE: 303-297-2976 FAX: 303-297-2693			

BRIDGE RAIL TYPE 7 (SPECIAL) (3 OF 3)			Project No./Code
Designer: A. Leifheit	Structure Numbers		ES6 0852-103
Detailer: A. Leifheit			17679
Sheet Subset: WALL	Subset Sheets: W56 of W59		Sheet Number 186

WALL-F-16-EH

WALL	HCL FLYOVER RAMP					Comment
Layout Line Stationing	HCL Stationing	HCL Elevation	HCL Offset to Wall WP (ft.)	Cross-Slope	WP Elev. (HCL - 3")	
9+97.53	705+67.50	5401.35	8.96 Rt	-0.02	5400.92	Begin Wall
10+17.53	705+87.50	5401.45	8.96 Rt	-0.02	5401.02	
10+37.53	706+07.50	5401.55	8.96 Rt	-0.02	5401.12	
10+57.53	706+27.50	5401.65	8.96 Rt	-0.02	5401.22	
10+77.53	706+47.50	5401.75	8.96 Rt	-0.02	5401.32	
10+97.53	706+67.50	5401.85	8.96 Rt	-0.02	5401.42	
11+17.53	706+87.50	5401.95	8.96 Rt	-0.02	5401.52	
11+37.53	707+07.50	5402.05	8.96 Rt	-0.02	5401.62	
11+57.53	707+27.50	5402.15	8.96 Rt	-0.02	5401.72	
11+77.53	707+47.50	5402.25	8.96 Rt	-0.02	5401.82	
11+97.53	707+67.50	5402.35	8.96 Rt	-0.02	5401.92	
12+17.53	707+87.50	5402.45	8.96 Rt	-0.02	5402.02	
12+37.53	708+07.50	5402.55	8.96 Rt	-0.02	5402.12	
12+57.53	708+27.50	5402.65	8.96 Rt	-0.02	5402.22	
12+77.53	708+47.50	5402.75	8.96 Rt	-0.02	5402.32	
12+97.53	708+67.50	5402.87	8.96 Rt	-0.02	5402.44	
13+17.53	708+87.50	5403.03	8.96 Rt	-0.02	5402.60	
13+37.53	709+07.50	5403.24	8.96 Rt	-0.02	5402.81	
13+57.53	709+27.50	5403.50	8.96 Rt	-0.02	5403.07	
13+77.53	709+47.50	5403.80	8.96 Rt	-0.02	5403.37	
13+97.53	709+67.50	5404.15	8.96 Rt	-0.02	5403.72	
14+17.53	709+87.50	5404.55	8.96 Rt	-0.02	5404.12	
14+37.53	710+07.50	5404.99	8.96 Rt	-0.02	5404.57	
14+57.53	710+27.50	5405.49	8.96 Rt	-0.02	5405.06	
14+77.53	710+47.50	5406.02	8.96 Rt	-0.02	5405.59	
14+97.53	710+67.50	5406.61	8.96 Rt	-0.02	5406.18	
15+17.53	710+87.50	5407.24	8.96 Rt	-0.02	5406.81	
15+37.53	711+07.50	5407.92	8.96 Rt	-0.02	5407.49	
15+57.53	711+27.50	5408.64	8.96 Rt	-0.02	5408.21	
15+77.53	711+47.50	5409.41	8.96 Rt	-0.02	5408.98	
15+97.53	711+67.50	5410.21	8.96 Rt	-0.02	5409.78	
16+17.53	711+87.50	5411.01	8.96 Rt	-0.02	5410.58	
16+37.53	712+07.50	5411.81	8.96 Rt	-0.02	5411.38	
16+57.53	712+27.50	5412.61	8.96 Rt	-0.02	5412.18	
16+77.53	712+47.50	5413.41	8.96 Rt	-0.02	5412.98	
16+97.53	712+67.50	5414.21	8.96 Rt	-0.02	5413.78	
17+17.53	712+87.50	5415.01	8.96 Rt	-0.02	5414.58	
17+37.53	713+07.50	5415.81	8.96 Rt	-0.02	5415.38	
17+57.53	713+27.50	5416.61	8.96 Rt	-0.02	5416.18	
17+77.53	713+47.50	5417.41	8.96 Rt	-0.02	5416.98	
17+97.53	713+67.50	5418.21	8.96 Rt	-0.02	5417.78	
18+17.53	713+87.50	5419.01	8.96 Rt	-0.02	5418.58	
18+37.53	714+07.50	5419.81	8.96 Rt	-0.02	5419.38	
18+57.53	714+27.50	5420.61	8.96 Rt	-0.02	5420.18	
18+77.53	714+47.50	5421.41	8.96 Rt	-0.02	5420.98	
18+97.53	714+67.50	5422.21	8.96 Rt	-0.02	5421.78	
19+17.53	714+87.50	5423.01	8.96 Rt	-0.02	5422.58	
19+37.53	715+07.50	5423.81	8.96 Rt	-0.02	5423.38	
19+57.53	715+27.50	5424.61	8.96 Rt	-0.020	5424.18	
19+77.53	715+47.50	5425.41	8.96 Rt	-0.019	5424.99	
19+97.53	715+67.50	5426.21	8.96 Rt	-0.009	5425.88	
20+17.53	715+87.50	5427.01	8.96 Rt	0.000	5426.76	
20+37.53	716+07.50	5427.81	8.96 Rt	0.010	5427.65	

WALL-F-16-EH

WALL	HCL FLYOVER RAMP					Comment
Layout Line Stationing	HCL Stationing	HCL Elevation	HCL Offset to Wall WP (ft.)	Cross-Slope	WP Elev. (HCL - 3")	
20+57.53	716+27.50	5428.61	8.96 Rt	0.020	5428.54	Approach Slab and Coping
						See Flyover Bridge Plans
20+77.53	716+47.50	5429.41	8.96 Rt	0.029	5429.42	Approach Slab and Coping
						See Flyover Bridge Plans
20+78.75	716+48.72	5429.46	8.96 Rt	0.030	5429.48	PI - Abutment Corner
						See Flyover Bridge Plans
20+87.71	716+48.72	5429.46	0.00	0.000	5429.21	Under Approach Slab
						See Flyover Bridge Plans
21+10.67	716+48.72	5429.46	22.96 Lt	-0.030	5428.52	PI - Abutment Corner
						See Flyover Bridge Plans
21+11.88	716+47.50	5429.41	22.96 Lt	-0.029	5428.48	Approach Slab and Coping
						See Flyover Bridge Plans
21+31.88	716+27.50	5428.61	22.96 Lt	-0.020	5427.91	Approach Slab and Coping
						See Flyover Bridge Plans
21+51.88	716+07.50	5427.81	22.96 Lt	-0.010	5427.33	PI - Shoulder transition
21+81.88	715+77.52	5426.61	22.96 Lt	0.005	5426.47	PI - Shoulder transition
22+01.88	715+57.52	5425.81	22.96 Lt	0.014	5425.89	
22+21.88	715+37.52	5425.01	22.96 Lt	0.02	5425.22	
22+41.88	715+17.52	5424.21	22.96 Lt	0.02	5424.42	
22+61.88	714+97.52	5423.41	22.96 Lt	0.02	5423.62	
22+81.88	714+77.52	5422.61	22.96 Lt	0.02	5422.82	
23+01.88	714+57.52	5421.81	22.96 Lt	0.02	5422.02	
23+21.88	714+37.52	5421.01	22.96 Lt	0.02	5421.22	
23+41.88	714+17.52	5420.21	22.96 Lt	0.02	5420.42	
23+61.88	713+97.52	5419.41	22.96 Lt	0.02	5419.62	
23+81.88	713+77.52	5418.61	22.96 Lt	0.02	5418.82	
24+01.88	713+57.52	5417.81	22.96 Lt	0.02	5418.02	
24+21.88	713+37.52	5417.01	22.96 Lt	0.02	5417.22	
24+41.88	713+17.52	5416.21	22.96 Lt	0.02	5416.42	
24+61.88	712+97.52	5415.41	22.96 Lt	0.02	5415.62	
24+81.88	712+77.52	5414.61	22.96 Lt	0.02	5414.82	
25+01.88	712+57.52	5413.81	22.96 Lt	0.02	5414.02	
25+21.88	712+37.52	5413.01	22.96 Lt	0.02	5413.22	
25+41.88	712+17.52	5412.21	22.96 Lt	0.02	5412.42	
25+61.88	711+97.52	5411.41	22.96 Lt	0.02	5411.62	
25+81.88	711+77.52	5410.61	22.96 Lt	0.02	5410.82	
26+01.88	711+57.52	5409.81	22.96 Lt	0.02	5410.02	
26+21.88	711+37.52	5409.02	22.96 Lt	0.02	5409.23	
26+41.88	711+17.52	5408.27	22.96 Lt	0.02	5408.48	
26+61.88	710+97.52	5407.57	22.96 Lt	0.02	5407.78	
26+81.88	710+77.52	5406.92	22.96 Lt	0.02	5407.13	
27+01.88	710+57.52	5406.31	22.96 Lt	0.02	5406.52	
27+21.88	710+37.52	5405.75	22.96 Lt	0.02	5405.96	
27+41.88	710+17.52	5405.23	22.96 Lt	0.02	5405.44	
27+51.88	710+07.52	5404.99	22.96 Lt	0.02	5405.20	End Wall

Design			Detail			Quantities		
	INITIAL	DATE		INITIAL	DATE		INITIAL	DATE
Designed By	TWM	01/10	Detailed By	DRA	01/10	Quantities By	TWM	01/10
Checked By	JAR	01/10	Checked By	JBK	01/10	Checked By	JAR	01/10

Print Date: 1/19/2010
File Name: 14679_MSE_TopWall_Elev_01.dgn
Horiz. Scale: 1:1 Vert. Scale: As Noted
Unit Information 0224 Unit Leader Initials MH

WILSON & COMPANY Engineers & Architects
999 18TH STREET, SUITE 2800
DENVER, CO 80202
PHONE: 303-297-2976
FAX: 303-297-2693

Sheet Revisions		
Date:	Comments	Init.

Colorado Department of Transportation
8833 South Wadsworth Court
Littleton, CO 80128
Phone: 303-972-9112 FAX: 303-972-9114
Region 6 RLB

As Constructed
No Revisions:
Revised:
Void:

MSE WALL TOP OF WALL ELEVATIONS (1 OF 3)

Designer: J. Roberts
Detailer: R. Artman
Sheet Subset: WALL
Structure Numbers
Subset Sheets: W57 of W59

Project No./Code
ES6 0852-103
17679
Sheet Number 187

WALL-F-16-EM

WALL	HCL FLYOVER RAMP					Comment
Layout Line Stationing	HCL Stationing	HCL Elevation	HCL Offset to Wall WP (ft.)	Cross-Slope	WP Elev. (HCL - 3")	
10+00.00	743+44.22	5492.69	10.29 Rt	0.020	5492.65	Begin Wall
10+30.00	743+74.19	5494.19	8.96 Rt	0.012	5494.05	PI Layout Line
10+50.00	743+94.19	5495.19	8.96 Rt	0.006	5494.99	
10+70.00	744+14.19	5496.19	8.96 Rt	-0.001	5495.93	
10+90.00	744+34.19	5497.19	8.96 Rt	-0.007	5496.88	
11+10.00	744+54.19	5498.19	8.96 Rt	-0.014	5497.82	
11+30.00	744+74.19	5499.19	8.96 Rt	-0.020	5498.76	
11+50.00	744+94.19	5500.19	8.96 Rt	-0.020	5499.76	
11+70.00	745+14.19	5501.19	8.96 Rt	-0.020	5500.76	
11+90.00	745+34.19	5502.19	8.96 Rt	-0.020	5501.76	
12+10.00	745+54.19	5503.19	8.96 Rt	-0.020	5502.76	
12+30.00	745+74.19	5504.19	8.96 Rt	-0.020	5503.76	
12+50.00	745+94.19	5505.19	8.96 Rt	-0.020	5504.76	
12+70.00	746+14.19	5506.19	8.96 Rt	-0.020	5505.76	
12+77.52	746+21.71	5506.57	8.96 Rt	-0.020	5506.14	PC - HCL Flyover Ramp
12+90.00	746+34.17	5507.19	8.97 Rt	-0.020	5506.76	
13+10.00	746+54.14	5508.18	9.05 Rt	-0.020	5507.75	
13+30.00	746+74.11	5509.16	9.20 Rt	-0.020	5508.73	
13+50.00	746+94.07	5510.13	9.42 Rt	-0.020	5509.69	
13+70.00	747+14.04	5511.07	9.71 Rt	-0.020	5510.63	
13+90.00	747+34.00	5512.01	10.07 Rt	-0.020	5511.55	
14+10.00	747+53.96	5512.92	10.50 Rt	-0.020	5512.46	
14+30.00	747+73.91	5513.82	10.99 Rt	-0.020	5513.35	
14+50.00	747+93.87	5514.71	11.56 Rt	-0.020	5514.22	
14+70.00	748+13.82	5515.57	12.20 Rt	-0.020	5515.08	
14+90.00	748+33.76	5516.43	12.91 Rt	-0.020	5515.92	
15+10.00	748+53.70	5517.26	13.69 Rt	-0.020	5516.74	
15+30.00	748+73.63	5518.08	14.54 Rt	-0.020	5517.54	
15+50.00	748+93.56	5518.89	15.46 Rt	-0.020	5518.33	
15+70.00	749+13.48	5519.68	16.45 Rt	-0.020	5519.10	
15+90.00	749+33.39	5520.45	17.50 Rt	-0.020	5519.85	
16+02.86	749+46.19	5520.94	18.22 Rt	-0.020	5520.32	PT - HCL Flyover Ramp
16+10.00	749+53.31	5521.21	18.63 Rt	-0.020	5520.58	
16+30.00	749+73.28	5521.95	19.77 Rt	-0.020	5521.31	
16+50.00	749+93.25	5522.68	20.90 Rt	-0.020	5522.01	
16+70.00	750+13.22	5523.39	22.04 Rt	-0.020	5522.70	
16+90.00	750+33.18	5524.09	23.18 Rt	-0.020	5523.37	
17+10.00	750+53.15	5524.77	24.32 Rt	-0.020	5524.03	
17+30.00	750+73.12	5525.45	25.45 Rt	-0.020	5524.69	
17+40.00	750+83.10	5525.79	26.02 Rt	-0.020	5525.02	PI - Layout Line
17+50.00						See Plan and Elevation
17+60.00						End Wall
						See Plan and Elevation

WALL-F-16-EN

WALL	HCL FLYOVER RAMP					Comment
Layout Line Stationing	HCL Stationing	HCL Elevation	HCL Offset to Wall WP (ft.)	Cross-Slope	WP Elev. (HCL - 3")	
10+08.78	738+39.86	5467.47	21.96 Lt	-0.020	5466.78	Begin Wall
10+28.78	738+19.86	5466.47	21.96 Lt	-0.020	5465.78	
10+48.78	737+99.86	5465.47	21.96 Lt	-0.020	5464.78	
10+68.78	737+79.86	5464.52	21.96 Lt	-0.020	5463.83	
10+88.78	737+59.86	5463.62	21.96 Lt	-0.020	5462.93	
11+08.78	737+39.86	5462.77	21.96 Lt	-0.020	5462.08	
11+28.78	737+19.86	5461.98	21.96 Lt	-0.020	5461.29	
11+48.78	736+99.86	5461.23	21.96 Lt	-0.020	5460.54	
11+68.78	736+79.86	5460.53	21.96 Lt	-0.020	5459.85	
11+88.78	736+59.86	5459.89	21.96 Lt	-0.020	5459.20	
12+08.78	736+39.86	5459.29	21.96 Lt	-0.020	5458.61	
12+28.78	736+19.86	5458.75	21.96 Lt	-0.020	5458.06	
12+48.78	735+99.86	5458.26	21.96 Lt	-0.020	5457.57	
12+68.78	735+79.86	5457.81	21.96 Lt	-0.020	5457.13	
12+88.78	735+59.86	5457.42	21.96 Lt	-0.020	5456.73	
13+08.78	735+39.86	5457.08	21.96 Lt	-0.020	5456.39	
13+28.78	735+19.86	5456.79	21.96 Lt	-0.020	5456.10	
13+48.78	734+99.86	5456.55	21.96 Lt	-0.020	5455.86	
13+68.78	734+79.86	5456.36	21.96 Lt	-0.020	5455.67	
13+88.78	734+59.86	5456.22	21.96 Lt	-0.020	5455.53	PI - Shoulder transition
14+18.78	734+29.86	5456.11	22.96 Lt	-0.026	5455.27	PI - Shoulder transition
14+27.64	734+21.00	5456.10	22.96 Lt	-0.030	5455.16	PC - HCL Flyover Ramp
						and Layout Line
14+38.78	734+09.56	5456.10	22.96 Lt	-0.036	5455.03	
14+58.78	733+89.04	5456.14	22.96 Lt	-0.046	5454.84	Approach Slab and Coping
						See Flyover Bridge Plans
14+68.78	733+78.77	5456.18	22.96 Lt	-0.050	5454.78	Approach Slab and Coping
						See Flyover Bridge Plans
14+70.00	733+77.52	5456.18	22.96 Lt	-0.050	5454.78	PI - Abutment Corner
						See Flyover Bridge Plans
14+92.96	733+77.52	5456.18	0.00	0.000	5455.93	Under Approach Slab
						See Flyover Bridge Plans
15+01.92	733+77.52	5456.18	8.96 Rt	0.050	5456.38	PI - Abutment Corner
						See Flyover Bridge Plans
15+03.14	733+78.73	5456.18	8.96 Rt	0.050	5456.38	Approach Slab and Coping
						See Flyover Bridge Plans
15+23.14	733+98.53	5456.11	8.96 Rt	0.041	5456.23	End Wall
						Approach Slab and Coping
						See Flyover Bridge Plans

Design			Detail			Quantities		
	INITIAL	DATE		INITIAL	DATE		INITIAL	DATE
Designed By	TWM	01/10	Detailed By	RGA	01/10	Quantities By	TWM	01/10
Checked By	JAR	01/10	Checked By	JBK	01/10	Checked By	JAR	01/10

Print Date: 1/19/2010
File Name: 14679_MSE_TopWall_Elev_02.dgn
Horiz. Scale: 1:1 Vert. Scale: As Noted
Unit Information 0224 Unit Leader Initials MH

WILSON & COMPANY Engineers & Architects
999 18TH STREET, SUITE 2900
DENVER, CO 80202
PHONE: 303-297-2976
FAX: 303-297-2693

Sheet Revisions		
Date:	Comments	Init.

Colorado Department of Transportation
DOT DEPARTMENT OF TRANSPORTATION
8833 South Wadsworth Court
Littleton, CO 80128
Phone: 303-972-9112 FAX: 303-972-9114
Region 6 RLB

As Constructed
No Revisions:
Revised:
Void:

MSE WALL TOP OF WALL ELEVATIONS (2 OF 3)

Designer: J. Roberts
Detailer: R. Artman
Structure Numbers
Sheet Subset: WALL
Subset Sheets: W58 of W59

Project No./Code
ES6 0852-103
17679
Sheet Number 188

WALL-F-16-EP

WALL	HCL TRAIL					Comment
Layout Line Stationing	HCL Stationing	HCL Elevation	HCL Offset to Wall WP (ft.)	Cross-Slope	WP Elev.	
10+00.00	115+51.86	5477.04	7.50 Rt	0.020	5477.19	Begin Wall
10+20.00	115+71.86	5477.86	7.50 Rt	0.020	5478.01	
10+40.00	115+91.86	5478.69	7.50 Rt	0.020	5478.84	
10+60.00	116+11.86	5479.51	7.50 Rt	0.020	5479.66	
10+80.00	116+31.86	5480.33	7.50 Rt	0.020	5480.48	
11+00.00	116+51.86	5481.15	7.50 Rt	0.020	5481.30	
11+20.00	116+71.86	5481.97	7.50 Rt	0.020	5482.12	
11+40.00	116+91.86	5482.80	7.50 Rt	0.020	5482.95	
11+50.00	117+01.86	5483.21	7.50 Rt	0.020	5483.36	PI - Layout Line
11+80.00	117+31.83	5484.44	8.83 Rt	0.000	5484.44	End Wall

WALL-F-16-EL

WALL	HCL TRAIL					Comment
Layout Line Stationing	HCL Stationing	HCL Elevation	HCL Offset to Wall WP (ft.)	Cross-Slope	WP Elev.	
10+00.00	118+74.83	5484.66	8.83 Rt	0.000	5484.66	Begin Wall
10+30.00	119+04.80	5483.46	7.50 Rt	0.020	5483.61	PI - Layout Line
10+50.00	119+24.80	5482.81	7.50 Rt	0.020	5482.96	
10+70.00	119+44.80	5482.32	7.50 Rt	0.020	5482.47	
10+90.00	119+64.80	5481.97	7.50 Rt	0.020	5482.12	
11+10.00	119+84.80	5481.78	7.50 Rt	0.020	5481.93	
11+20.00	119+94.80	5481.74	7.50 Rt	0.020	5481.89	End Wall

Design			Detail			Quantities		
	INITIAL	DATE		INITIAL	DATE		INITIAL	DATE
Designed By	TWM	01/10	Detailed By	RGA	01/10	Quantities By	TWM	01/10
Checked By	JAR	01/10	Checked By	JBK	01/10	Checked By	JAR	01/10

Print Date: 1/19/2010
File Name: 14679_MSE_TopWall_Elev_03.dgn
Horiz. Scale: 1:1 Vert. Scale: As Noted
Unit Information 0224 Unit Leader Initials MH

WILSON & COMPANY Engineers & Architects
999 18TH STREET, SUITE 2600
DENVER, CO 80202
PHONE: 303-297-2976
FAX: 303-297-2693

Sheet Revisions		
Date:	Comments	Init.

Colorado Department of Transportation
DOT DEPARTMENT OF TRANSPORTATION
8833 South Wadsworth Court
Littleton, CO 80128
Phone: 303-972-9112 FAX: 303-972-9114
Region 6 RLB

As Constructed
No Revisions:
Revised:
Void:

MSE WALL TOP OF WALL ELEVATIONS (3 OF 3)

Designer: J. Roberts
Detailer: R. Artman
Sheet Subset: WALL
Structure Numbers
Subset Sheets: W59 of W59

Project No./Code
ES6 0852-103
17679
Sheet Number 189