GENERAL NOTES:

The contractor is hereby referred to section 105.08 of the standard specifications regarding coordination and precedence of the contract documents.

Sulfate exposure for this site is class 2. Refer to standard special provisions 601 & 701 structural concrete for mix requirements.

A class 2 suface finish will be required on exposed concrete surfaces, except the sides and bottom of the trapezoidal box girders which shall conform to standard specification 618.14. Structural concrete stain will be required on all exposed concrete surfaces. Colors shall be flesh and median brown, equivalent to federal standard 595b color nos. 31667 and 30219 respectively, and are to be selected from test panels provided by the contractor. Color placement shall be as shown in the plans. Refer to project special provision 601 & 708 structural concrete stain.

All plan dimensions are true horizontal. The contractor and/or fabricator is responsible for incorporating camber, grade, cross-slope, and other effects that may impact the final dimensions and/or detailing.

One feasible erection scheme is shown in the plans, including any considerations and assumptions made during design. The erection scheme shown does not supplant, nor imply any supplantation of, the contractor's responsibility for the fabrication, erection, or construction of any part of the bridge.

Chorded girders will not be permitted.

An allowable variation in the deck overhangs of ±3½" is permitted, such that girders cast to a radius of 950' are acceptable. Any modifications to plan elements or pay items as a result of this variation are the responsibility of the Contractor.

The precast girder fabricator is responsible for considering and mitigating any issues that could affect the as-cast girder geometry, including pouring sequence, thermal gradient/heat of hydration, rate of cure, etc.

Contractor is responsible for any necessary consequential plan changes caused by dimensional variations in fabricated items from plan dimensions (e.g. bearing seat elevation changes to accommodate thicker Type I bearings).

The Contractor's Engineer is responsible for complete analysis of all temporary support conditions and lifting operations that may have an effect on the stresses in the girders. The Contractor's Erection Plan shall fully document all temporary support locations and lifting locations at each progressive stage of girder fabrication

Per section 108.03 of the standard specifications, the following schedule constraints shall be incorporated into the contractor's CPM schedule:

- Precast concrete U girders shall have attained an age of at least 120 days before erection.
- Deck pour, including continuity diaphragms, shall not occur sooner than 90 days after completion of girder post-tensioning.
- Expansion joint devices shall not be installed until deck concrete has aged a minimum of 90 days.

Stay-in-place metal deck forms may be used to form the lid of the U girders. They shall not be used elsewhere.

Precast panel deck forms shall not be used to form the lid of the U girders. They may be used between the girders.

Full-depth overhang falsework brackets are required for the forming of the deck overhangs to prevent transverse loading of the U girder webs. Falsework is not allowed on railroad r.o.w. unless approved in advance by railroad.

Ⓝ denotes non-epoxy coated reinforcing steel.

All reinforcing steel shall be supported by steel chairs or precast mortar blocks (dobies). Plastic chairs shall not be used.

High performance reinforcing steel, to be used in expansion pier caps, shall consist of either z-bar, solid stainless steel bar, stainless steel-clad black bars, or mmfx-2 bars. Any of these types are acceptable, but only one type shall be used on the project. Refer to project special provision 602 and 709 high-performance reinforcing steel.

Splice lengths for High-performance reinforcing steel shall be equivalent to splice lengths for epoxy coated reinforcing

Monostrand post-tensioning is permitted for this project. Refer to project special provision 618 and 714 monostrand post-tensioning.

Project special provision 509 and 618 Curved Girder Erection applies to the flyover structure.

Unless noted otherwise, existing surfaces at construction joints shall be roughened to a minimum ¼" amplitude.

Duct area shall be 2.5 times the required area of prestressing.

The Contractor is responsible for assessing and providing any measures necessary to mitigate potential concrete cracking associated with massive elements (e.g. columns and pier caps)

For structure number installation, see standard S-614-12.

Stations, elevations, and dimensions contained in these plans are calculated from a recent field survey. The contractor shall verify all dependent dimensions in the field before ordering or fabricating any material.

The information shown on these plans concerning the type and location of underground utilities and appurtenances is not guaranteed to be accurate or all inclusive. The contractor is responsible for making his own determination as to the type and location of underground utilities and appurtenances as may be necessary to avoid damage thereto. The contractor shall contact the utility notification center of Colorado at 1-800-922-1987 at least 2 days (not including the day of notification) prior to any excavation or other earthwork.

Ah = Ahead	Dwg. = Drawing	HCL = Horizontal Control Line	Reinf. = Reinforcing
Abut. = Abutment	E.F. = Each Face	Jt. = Joint	Shld. = Shoulder
B.F. = Back Face	Elev. = Elevation	LOL = Layout Line	Spa. = Spaced
Bk. = Back	Embed. = Embedment	Max. = Maximum	Sta. = Station
Bot. = Bottom	Esq. = Equal	Min. = Minimum	Std. = Standard
Brg. = Bearing	Expo. = Expansion	No. = Number	Str. = Structure
C.I.P. = Cast-in-place	R.F.D. = Front Face	Nom. = Nominal	Symm. = Symmetrical
Clr. = Clear	Gal. = Galvanized	O.C. = On Center	Tot. = Total
Const. = Construction	U.S. = High Strength	PGL. = Profile Grade Line	Typ. = Typical
Cont. = Continuous	HAS = Headed Anchor Stud	Proj. = Projection	WP = Working point

CONTRACTOR DRAWING SUBMITTALS:

In accordance with standard specification 105.02(b), the following supplemental drawing submittals are required for the construction of this structure at a minimum:

SECTION	DESCRIPTION	TYPE
509	STRUCTURAL STEEL (GALVANIZED)	SHOP DRAWINGS
518	EXPANSION DEVICES (0 TO 4")	WORKING DRAWINGS
601	FALSEWORK (DECK OVERHANGS)	WORKING DRAWINGS
601	PIER CAPS AND COLUMNS	WORKING DRAWINGS
601	PERMANENT STEEL BRIDGE DECK FORMS	WORKING DRAWINGS
601 & 618	PRECAST PANEL DECK FORMS	WORKING DRAWINGS
602	REINFORCING STEEL	WORKING DRAWINGS
606	BRIDGE RAILING	WORKING DRAWINGS
618	PRECAST CONCRETE U GIRDERS (CURVED WITH TOP SLAB)	SHOP DRAWINGS
618	PRESTRESSING STEEL (INCLUDING GROUTING CONTROL PLAN)	SHOP DRAWINGS

All supplemental drawing submittals shall be fully incorporated into the contractor's schedule. Each submittal shall be shown in the contractor's cpm schedule as described in 108.03(c). Refer to 105.02(c) for duration of shop drawing reviews by engineer. Contractor shall submit working drawings to the engineer twenty (20) days before the start of work.

BRIDGE DESCRIPTION

12-span curved flyover bridge (133'-6", 110'-0", 132'-0", 165'-0", 160'-0", 147'-8", 147'-8", 160'-0", 160'-0", 160'-0", 138'-0", 105'-0"), precast prestressed concrete U girders made continuous for live load;
Southbound south Santa Fe Blvd. To eastbound C470 ramp
Over south Santa Fe Blvd., C470, and UPRR and BNSF railroads,
Roadway curb to curb 30'-0", 90° 00'00" skew, type 7 (Special) bridge rail.

INDEX OF SHEETS

SHT. NO.	TITLE
B1	GENERAL NOTES & INDEX OF SHEETS
B2	KEY PLAN
B3	SUMMARY OF QUANTITIES
B4	DESIGN CRITERIA
B5	GENERAL LAYOUT (1 OF 4)
B6	GENERAL LAYOUT (2 OF 4)
B7	GENERAL LAYOUT (3 OF 4)
B8	GENERAL LAYOUT (4 OF 4)
B9	BRIDGE TYPICAL SECTION
B10	ENGINEERING GEOLOGY (1 OF 4)
B11	ENGINEERING GEOLOGY (2 OF 4)
B12	ENGINEERING GEOLOGY (3 OF 4)
B13	ENGINEERING GEOLOGY (4 OF 4)
B14	CONSTRUCTION LAYOUT (1 OF 8)
B15	CONSTRUCTION LAYOUT (2 OF 8)
B16	CONSTRUCTION LAYOUT (3 OF 8)
B17	CONSTRUCTION LAYOUT (4 OF 8)
B18	CONSTRUCTION LAYOUT (5 OF 8)
B19	CONSTRUCTION LAYOUT (6 OF 8)
B20	CONSTRUCTION LAYOUT (7 OF 8)
B21	CONSTRUCTION LAYOUT (8 OF 8)
B22	FOUNDATION LAYOUT & CAISSON DETAILS
B23	PIER COLUMNS
B24	END PIER CAP POST-TENSIONING AND DIMENSIONS
B25	END PIER CAP REINFORCING DETAILS
B26	EXPANSION PIER CAP POST-TENSIONING AND DIMENSIONS
B27	EXPANSION PIER CAP REINFORCING DETAILS
B28	INTERIOR PIER CAP POST-TENSIONING AND DIMENSIONS
B29	INTERIOR PIER CAP REINFORCING DETAILS
B30	PIER CAP MISCELLANEOUS DETAILS
B31	PRECAST TUB GIRDER DETAILS
B32	GIRDER END DIAPHRAGM (1 OF 2)
B33	GIRDER END DIAPHRAGM (2 OF 2)
B34	GIRDER SPLICE SCHEMATIC (1 OF 2)
B35	GIRDER SPLICE SCHEMATIC (2 OF 2)
B36	GIRDER INTERMEDIATE DIAPHRAGMS
B37	ACCESS DOOR DETAILS
B38	TORSIONAL ERECTION BRACE DETAILS
B39	PIER DIAPHRAGM (1 OF 3)
B40	PIER DIAPHRAGM (2 OF 3)
B41	PIER DIAPHRAGM (3 OF 3)
B42	ERECTION SCHEMATIC & NOTES (1 OF 2)
B43	ERECTION SCHEMATIC & NOTES (2 OF 2)
B44	TYPICAL DECK REINFORCING
B45	DECK REINFORCING PLAN
B46	OPTIONAL PRECAST PANEL DECK FORM (1 OF 2)
B47	OPTIONAL PRECAST PANEL DECK FORM (2 OF 2)
B48	APPROACH SLAB DETAILS
B49	BEARING DETAILS
B50	EXPANSION JOINT DETAILS (1 OF 2)
B51	EXPANSION JOINT DETAILS (2 OF 2)
B52	BRIDGE RAIL TYPE 7 (SPECIAL) (1 OF 2)
B53	BRIDGE RAIL TYPE 7 (SPECIAL) (2 OF 2)
B54	FENCE CHAIN LINK (SPECIAL) (36 INCH SPLASH GUARD)
B55	FENCE CHAIN LINK (SPECIAL) (78 INCH)
B56	UNDERDECK LUMINAIRES
B57	DECK DRAIN DETAILS (1 OF 3)
B58	DECK DRAIN DETAILS (2 OF 3)
B59	DECK DRAIN DETAILS (3 OF 3)
B60 TO B72	BRIDGE DECK ELEVATIONS (1 OF 13) BRIDGE DECK ELEVATIONS (13 OF 13)

XX / BXX — Section or detail identification; Cross reference drawing number (if blank, reference is to same sheet)

Revision Dates	MM/YY
(Preliminary Stage Only)	

Design	INITIAL	DATE	Detail	INITIAL	DATE	Quantities	INITIAL	DATE
Designed By	KCS	08/09	Detailed By	ERS	08/09	Quantities By		
Checked By			Checked By	KCS	11/09	Checked By		

18026 4:41:06 PM S:\Tranpro\100002375\14679\Consultants\Bridge\Drawings\14679_pBD-N701.dgn

Print Date: 1/7/2010
File Name: 14679_pBD-N701.dgn
Horiz. Scale: 1:1 Vert. Scale: As Noted
Staff Bridge Branch - Unit 0224 Unit Leader: MH

PBSJ 4601 DTC Boulevard Suite 700 Denver, CO 80237

Sheet Revisions		
Date:	Comments	Init.

Colorado Department of Transportation
8833 South Wadsworth Court
Littleton, CO 80128
Phone: 303-972-9112 FAX: 303-972-9114
Region 6 RLB

As Constructed
No Revisions:
Revised:
Void:

SB SANTA FE TO EB C470 RAMP
GENERAL NOTES &
INDEX OF SHEETS

Designer: K. Saindon
Detailer: E. Schawo
Structure Numbers: F-16-YE
Sheet Subset: Bridge
Subset Sheets: B1 of 72

Project No./Code
ES6 0852-103
17679
Sheet Number 190

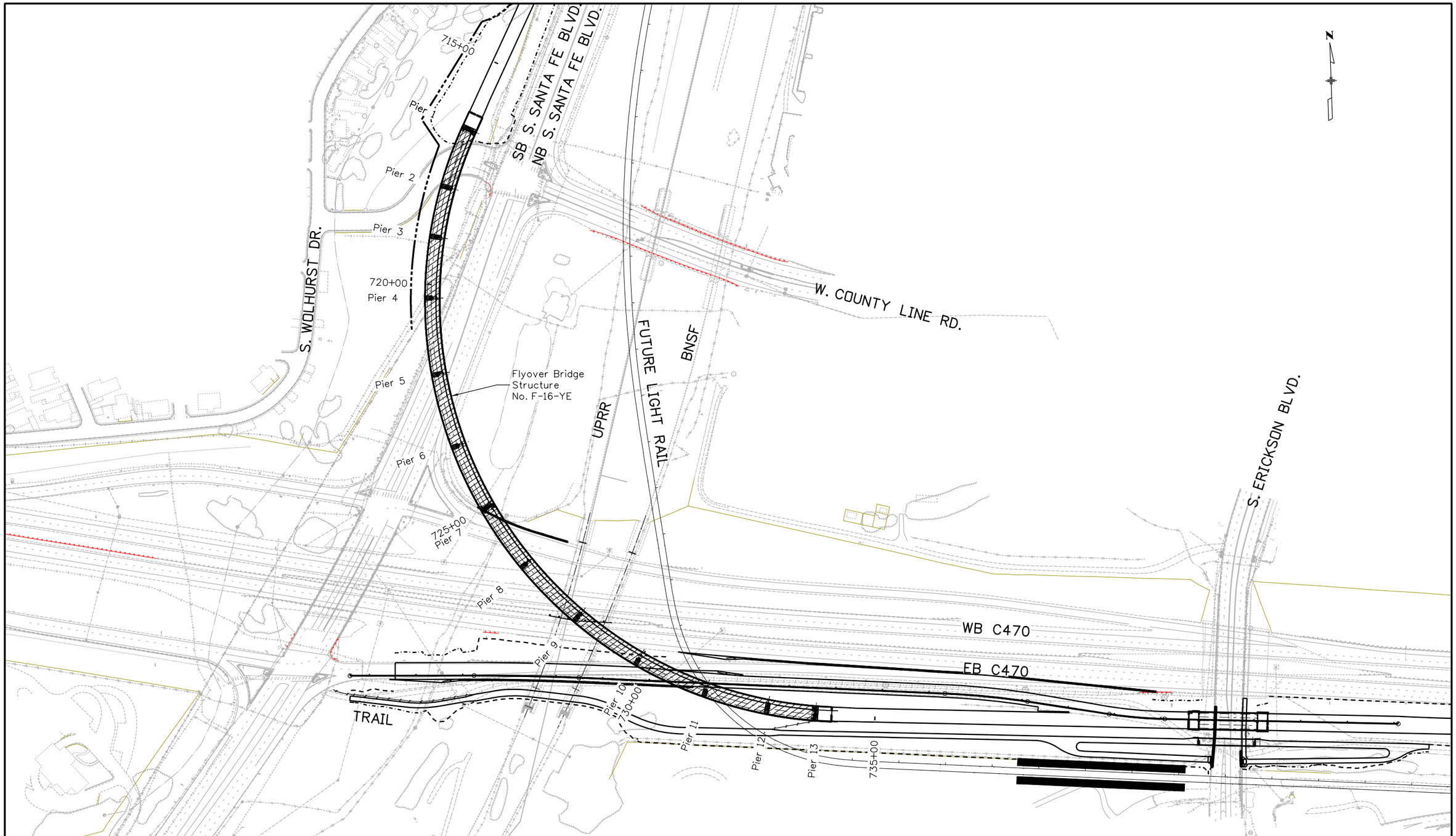

Revision Dates (Preliminary Stage Only)
MM/YY

Quantities		
	INITIAL	DATE
Quantities By		
Checked By		

Detail		
	INITIAL	DATE
Detailed By	MJW	07/09
Checked By	KCS	11/09

Design		
	INITIAL	DATE
Designed By	KCS	07/09
Checked By		

18026 1:50:29 PM S:\Tranpro\100002375\14679\Consultants\Bridge\Drawings\14679_pBD-P701.dgn

Print Date: 12/31/2009
File Name: 14679_pBD-P701.dgn
Horiz. Scale: 1:200 Vert. Scale: As Noted
Staff Bridge Branch - Unit 0224 Unit Leader: MH

PBSJ 4601 DTC Boulevard Suite 700 Denver, CO 80237

Sheet Revisions		
Date:	Comments	Init.

Colorado Department of Transportation
DOT DEPARTMENT OF TRANSPORTATION
8833 South Wadsworth Court
Littleton, CO 80128
Phone: 303-972-9112 FAX: 303-972-9114
Region 6 RLB

As Constructed
No Revisions:
Revised:
Void:

SB SANTA FE TO EB C470 RAMP
KEY PLAN

Designer: K. Saindon
Detailer: M. Welch
Sheet Subset: Bridge
Structure Numbers: F-16-YE
Subset Sheets: B2 of 72

Project No./Code
ES6 0852-103
17679
Sheet Number 191

SUMMARY OF QUANTITIES

ALTERNATE 1 - Default Bridge

ITEM NO.	DESCRIPTION	UNIT	SUPER-STRUCTURE	PIER 1	PIER 2	PIER 3	PIER 4	PIER 5	PIER 6	PIER 7	PIER 8	PIER 9	PIER 10	PIER 11	PIER 12	PIER 13	APPROACH SLAB	TOTAL
206	STRUCTURE EXCAVATION	CY			10	10	10	10	10	10	10	10	10	10	10	4		114
206	STRUCTURE BACKFILL (CLASS 2)	CY		5	7	7	7	7	7	7	7	7	7	7	7	5		87
403	STONE MATRIX ASPHALT	TON	890														34	924
503	DRILLED CAISSON (30 INCH)	LF		252						284						136		672
503	DRILLED CAISSON (48 INCH)	LF			160	150	132	180	194		158	156	136	112	76			1454
509	STRUCTURAL STEEL (GALVANIZED)	LB	97692															97692
512	BEARING DEVICE (TYPE I)	EACH	16															16
513	BRIDGE DRAIN (SPECIAL)	EACH	3															3
515	WATERPROOFING (MEMBRANE)	SY	5650														213	5863
518	BRIDGE EXPANSION DEVICE (0-4 INCH)	LF	180															180
518	ELASTOMERIC CONCRETE END DAM	CF	53														15	68
601	CONCRETE CLASS D (BRIDGE)	CY	1841	85	81	81	109	109	109	107	109	109	109	81	81	66	93	3170
601	STRUCTURE CONCRETE STAIN	SY	12753	96	118	118	168	168	168	165	168	168	168	118	118	62	160	14716
602	REINFORCING STEEL (EPOXY COATED)	LB	418977	5679	15901	15901	20523	20523	20523	13198	20523	20523	20523	15901	15901	2536	22653	649785
602	REINFORCING STEEL (HIGH PERFORMANCE)	LB		7559						6970						7559		22088
606	BRIDGE RAIL TYPE 7 (SPECIAL)	LF	3416														135	3551
607	FENCE CHAIN LINK (SPECIAL) (36 INCH SPLASH GUARD)	LF	2616														135	2751
607	FENCE CHAIN LINK (SPECIAL) (78 INCH)	LF	800															800
613	2 INCH ELECTRICAL CONDUIT	FT	1740														68	1808
618	PRESTRESSING STEEL	MKFT		42	74	74	74	74	74	74	74	74	74	74	74	42		898
618	PRECAST CONCRETE U GIRDER (CURVED W/TOP SLAB)	LF	3304															3304

ALTERNATE 2 - Steel Alternate

ITEM NO.	DESCRIPTION	UNIT	SUPER-STRUCTURE	PIER 1	PIER 2	PIER 3	PIER 4	PIER 5	PIER 6	PIER 7	PIER 8	PIER 9	PIER 10	PIER 11	PIER 12	PIER 13	APPROACH SLAB	TOTAL
631	ALTERNATE BRIDGE DESIGN AND CONSTRUCTION	LS	-	-	-	-	-	-	-	-	-	-	-	-	-	-	-	1

NOTES:

1. Item 509 - Structural Steel (Galvanized) includes torsional erection braces, anchor bolts, barrier cover plates, and intermediate diaphragms.
2. Item 513 - Bridge Drain (Special) includes grates, frame, aprons, downspouts, piping, and all incidentals necessary for a complete installation.
3. Item 601 - Concrete Class D (Bridge) for superstructure includes an allowance for haunches of 150 CY and shall not be recalculated.
4. Item 618 - Precast Concrete U Girder (Curved w/Top Slab) includes all items embedded in girder, and any optional splices.
5. Item 618 - Prestressing Steel includes tendons and bars. Rigid steel pipe deviators are incidental to this item.

Revision Dates (Preliminary Stage Only): MM/YY

Quantities: INITIAL DATE; Quantities By; Checked By

Detail: INITIAL ERS DATE 12/09; Detailed By; Checked By

Design: INITIAL SA DATE 12/09; Designed By; Checked By

18026 1:50:37 PM S:\Tranpro\100002375\14679\Consultants\Bridge\Drawings\14679_pBD-N702.dgn

Print Date: 12/31/2009
File Name: 14679_pBD-N702.dgn
Horiz. Scale: 1:1 Vert. Scale: As Noted
Staff Bridge Branch - Unit 0224 Unit Leader: MH

PBSJ 4601 DTC Boulevard Suite 700 Denver, CO 80237

Sheet Revisions		
Date:	Comments	Init.

Colorado Department of Transportation
DOT DEPARTMENT OF TRANSPORTATION
8833 South Wadsworth Court
Littleton, CO 80128
Phone: 303-972-9112 FAX: 303-972-9114
Region 6 RLB

As Constructed
No Revisions:
Revised:
Void:

SB SANTA FE TO EB C470 RAMP
SUMMARY OF QUANTITIES

Designer: S. Abraham
Detailer: E. Schawo
Sheet Subset: Bridge
Structure Numbers F-16-YE
Subset Sheets: B3 of 72

Project No./Code
ES6 0852-103
17679
Sheet Number 192

DESIGN CRITERIA:

1. Design Specifications
   1.1 AASHTO LRFD Bridge Design Specifications, AASHTO, 4th Edition with 2008 Interim Revision, Customary U.S Units.
   1.2 Bridge Design Manual (BDM) and Bridge Technical Memorandums, Colorado Department of Transportation (CDOT), May 2009.
   1.3 Bridge Rating Manual, CDOT, July 2003.
   1.4 Bridge Detail Manual, CDOT, January 2009.
   1.5 Standard Specifications for Road and Bridge Construction, CDOT, 2005.
   1.6 Standard Special Provisions, CDOT, 2009.
   1.7 Manual of Standard Practice, Concrete Reinforcing Steel Institute (CRSI) 27th Edition, 2003 2nd printing.
   1.8 Geotechnical Investigation Report...
2. Design Loads
   2.1 Load modification factors (AASHTO LRFD 1.3.5):
      (1) Ductility: η_D= 1.00 (All limit states)
      (2) Redundancy: η_R = 1.00 (All limit states)
      (3) Operational importance: η_I = 1.00 (All limit states)
   2.2 Dead Load (DC & DW) (AASHTO LRFD Table 3.5.1-1)
      2.2.1 Components and attached Dead Loads (DC)
         (1) Concrete with reinforcing steel, 150 lbs/ft³
         (2) Structural steel, 490 lbs/ft³
         (3) CDOT Type 7 barrier shall be used (Calculated weight = 500 lbs/ft, each). Fencing placed atop the barrier is included in this value.
         (4) No additional dead loads such as utilities, pipes, light standards, conduits, SIP forms or other immovable appurtenances are included in the design.
         (5) The superimposed dead loads shall be distributed evenly to all girders (AASHTO LRFD 4.6.2.2.1)
      2.2.2 Superimposed Dead Load (DW)
         (1) An allowance of 36 psf for a 3" thick asphalt wearing surface shall be included in the design (CDOT Memo June 15, 2000).
   2.3 Live Load (LL)
      Strength and Service Limit States (AASHTO LRFD 3.6.1.2)
      2.3.1 The design live load is AASHTO LRFD HL-93. CDOT permit vehicle, applied simultaneously with a single lane of HL-93 loading, shall be considered for the Strength II load combination (CDOT BDM 3.2).
      2.3.2 The maximum number of design lanes is 2. Consideration for multiple presence factors shall be included in the design. (AASHTO LRFD 3.6.1.1.1 and 3.6.1.1.2).
      2.3.3 Dynamic load allowance (IM) shall be in accordance with AASHTO LRFD Table 3.6.2.1-1. It shall not be applied to design lane load and foundation components below ground level.
   2.4 Braking Force (BR)
      The braking force shall be computed in accordance with AASHTO LRFD 3.6.4.
   2.5 Centrifugal Force (CE)
      Centrifugal forces shall be computed in accordance with AASHTO LRFD 3.6.3 for a design speed of 45 mph.
   2.6 Vehicular Collision Force (CT)
      In accordance with CDOT Bridge Design Manual (May 2009), CT need not be considered for the piers of this structure.
   2.7 Creep and Shrinkage (CR & SH)
      In accordance with AASHTO LRFD 5.4.2.3. Assumed relative humidity is 55%. Minimum age of girders at loading is 120 days.
   2.8 Ice Force (IC)
      Ice forces shall not be considered.
   2.9 Thermal Forces (TU & TG)
      2.9.1 The range of temperature shall be 90°F (+40°F; -50°F) (CDOT BDM 15.2).
      2.9.2 Forces and moments in elements due to superstructure temperature rise and fall shall be calculated based on the following:
         Coefficient of Thermal Expansion = 6.0x10-6/°F
         Assumed temperature at erection = 50°F
      2.9.3 For superstructure continuity design at piers only, temperature gradient (TG) shall be considered in accordance with LRFD 3.4.1:
         γ_{TG} = 0.0 at Strength and Extreme Event limit states
         γ_{TG} = 1.0 at Service limit state w/o LL+IM
         γ_{TG} = 0.5 at Service limit state w/ LL+IM
   2.10 Seismic force (EQ)
      Importance category is "other."
      Seismic performance zone 1
      Assumed acceleration coefficient < 0.05
      Connections of superstructure to substructure shall be designed for 0.15 times the vertical reaction due to tributary permanent load with no allowance for live load.
   2.11 Earth Forces (EH,ES,LS & DD)
      2.11.1 Integral abutments resist deflection at the top sufficiently and therefore at rest earth pressure condition is assumed.
      2.11.2 Abutment backwalls utilizing void form need not be designed for lateral earth pressures.
   2.12 Wind Loads (WL & WS)
      2.12.1 Wind loads shall be computed in accordance with AASHTO LRFD 3.8 for a 100 mph base wind velocity and "open country" terrain.
   2.13 Loading Combinations & Load Factors
      2.13.1 Load combinations shall be in accordance with AASHTO LRFD Table 3.4.1-1.
      2.13.2 Construction load combinations shall be in accordance with AASHTO LRFD Table 3.4.1-1, with load factors modified per AASHTO LRFD 3.4.2.
3. Materials
   3.1 Concrete

Element	Class	f'c (psi)
Superstructure & Substructure	D	4,500
Drilled Shafts	BZ	4,000
Closure pours in girders	S40	5,800
Pre-tensioned beams & slabs	PS	6,000-8,500

   3.2 Reinforcing Steel
      3.2.1 Reinforcing steel shall conform to ASTM A615, Grade 60 deformed for #4 bars and larger and shall be Grade 40 otherwise. (CDOT BDM 8.1.2)
      3.2.2 All reinforcing is epoxy coated except for drilled shafts and expansion pier caps.
      3.2.3 Expansion pier caps shall utilize high-performance corrosion-resistant reinforcing. The maximum yield strength of reinforcing for design calculations is 60 ksi. High-performance corrosion-resistant reinforcing with yield strengths in excess of 60 ksi shall still match the required bar sizes shown in the plans.
      3.2.4 All reinforcing steel bends conform to CRSI Standards or as noted otherwise. All bent bar dimensions shall be out-to-out.
      3.2.5 The stock length of reinforcing bars is 60'-0" for all bar sizes. Reinforcing bars shall be cut to CRSI tolerances.
      3.2.6 No allowance is made in bar length except for corrections associated with standard hooks and special bends.
      3.2.7 Reinforcing steel clear cover shall be as follows (unless noted otherwise):
         (1) Deck
            (a) Top 2"
            (b) Bottom 1"
         (2) All other elements:
            (a) Surfaces cast against forms 2"
            (b) Surfaces cast against earth 3"
      3.2.8 The following table gives the minimum Class B (staggered) splice lengths for epoxy coated reinforcing bars placed in accordance with subsection 602.06. These splice lengths shall be increased by 25% for bars spaced at less than 6" on center.

Bar Size	#4	#5	#6	#7	#8	#9	#10	#11
Class B Concrete	1'-7"	1'-11"	2'-6"	3'-5"	4'-5"	5'-8"	7'-2"	8'-9"
Class D Concrete	1'-7"	1'-11"	2'-4"	2'-9"	3'-8"	4'-7"	5'-10"	7'-2"

      3.2.9 The following table gives the minimum Class B (staggered) splice lengths for black reinforcing bars placed in accordance with subsection 602.06. These splice lengths shall be increased by 25% for bars spaced at less than 6" on center.

Bar Size	#4	#5	#6	#7	#8	#9	#10	#11
Class B Concrete	1'-0"	1'-4"	1'-8"	2'-3"	3'-0"	2'-9"	4'-9"	5'-10"
Class D Concrete	1'-0"	1'-4"	1'-7"	1'-10"	2'-5"	3'-1"	3'-11"	4'-9"

      3.2.10 The above splice lengths shall be increased by 20% for 3-bar bundles and 33% for 4-bar bundles.
      3.2.11 Class C (non-staggered) splices are as shown on the plans.
      3.2.12 When the contractor elects to substitute epoxy coated reinforcing for black reinforcing bars, the required minimum lap splice lengths shall be those shown for epoxy coated bars.
   3.3 Prestressing Steel
      3.3.1 Strand shall conform to ASTM A416, Grade 270 uncoated seven-wire low relaxation. Nominal diameter shall be 0.6".
         The Modulus of Elasticity shall be 28,500 ksi.
         The minimum cover for pre-stressing steel is 1.5".
         Maximum Jacking Stress - 75% GUTS (unless noted otherwise)
         Maximum Anchoring Stress 70% GUTS
         Anchor set 3/8" (internal tendons); 1/4" (monostrand)
         Friction coefficient 0.20 (internal tendons); 0.05 (monostrand)
         Wobble coefficient 0.0002 (internal tendons); 0.0014 (monostrand)
      3.3.2 Bar shall conform to ASTM A722, Grade 150.
         Maximum Jacking Stress - 80% GUTS
         Maximum Anchoring Stress 70% GUTS
   3.4 Structural Steel
      3.4.1 Structural steel conforms to the following ASTM (AASHTO) requirements:
         Modulus of Elasticity E = 29,000 ksi
         AASHTO M270, Grade 36 Fy = 36 ksi
   3.5 Elastomeric Bearings
      Grade 50 durometer elastomer
      Shear modulus (G) = 0.130 ksi
4. Element Design
   4.1 Concrete Deck Slabs
      4.1.1 No allowance is made for sacrificial wearing surface in the deck design.
      4.1.2 Bridge deck overhang shall be designed as per AASHTO LRFD Section A13.4.
      4.1.3 Waterproofing membrane shall be provided under the asphalt overlay (CDOT BDM 8.2).
   4.2 Prestressed Concrete Beams & Slabs
      4.2.1 Temporary stress limits shall be as shown in AASHTO LRFD 5.9.4.1.
      4.2.2 Stress limits, after losses, shall be as shown in AASHTO LRFD 5.9.4.2 for moderate corrosion conditions.
      4.2.3 Top and bottom fibers of the precompressed tensile zone shall not be in tension under full dead load after losses. (CDOT BDM 9.1.1)
   4.3 Deflections
      4.3.1 Deflection calculations include the entire width of the composite slab and the structurally continuous barriers in the cross section stiffness.
      4.3.2 The maximum allowable live load deflection shall be span length divided by 800.
   4.4 Bearings
      4.4.1 Design method A shall be used unless the quantity of bearings can justify the additional testing requirements for method B.
      4.4.2 The allowance for rotational uncertainties shall be taken as 0.005 radians about both the longitudinal and transverse axes of rotation for all bearing types.
      4.4.3 Reinforcement for laminated pads shall consist of 1/8" steel sheet.
5. Foundations
   5.1 Drilled Shafts
      5.1.1 Ultimate shaft capacities shall be determined using resistance factors of 0.40 for end bearing and 0.45 for skin friction.
6. Clearances
   Minimum permanent vertical under-clearances:
   W. County Line Road 16'-6"
   Santa Fe Drive, C470 and Ramps 16'-6"
   UP Railroad 23'-0"+ 6" = 23'-6"
   BNSF Railroad 23'-6'+ 6" = 24'-0"
7. Miscellaneous
   7.1 Drainage
      7.1.1 Deck drains shall be used on the bridges to prevent spread encroachment into the driving lane (CDOT BDM 16.1)
      7.1.2 A storm frequency of 5-years shall be used to compute the spread (CDOT BDM 16.1)
   7.2 Barriers
      7.2.1 The bridge shall be classified under the Test Level Four (TL-4) Selection Criteria concerning the traffic barrier. (AASHTO LRFD 13.7.2)
   7.3 Future Bearing Replacement
      7.3.1 Provisions shall been included for future bearing replacement.
   7.4 Deck Replaceability
      7.4.1 Decks shall be fully replaceable without the need for shoring that would require a reduction in laneage for undercrossing roadways.

Revision Dates (Preliminary Stage Only)	
MM/YY	

Quantities			
	INITIAL	DATE	
Quantities By		07/09	Designed By KCS 07/09
Checked By		11/09	Checked By KCS 07/09

Detail			
	INITIAL	DATE	
Detailed By	MJW	07/09	Detailed By MJW 07/09
Checked By	KCS	11/09	Checked By KCS 11/09

Design			
	INITIAL	DATE	
Designed By	KCS	07/09	Designed By KCS 07/09
Checked By			Checked By

18026 1:50:39 PM S:\Tranpro\100002375\14679\Consultants\Bridge\Drawings\14679_pBD-N703.dgn

Print Date: 12/31/2009	Sheet Revisions		
File Name: 14679_pBD-N703.dgn	Date:	Comments	Init.
Horiz. Scale: 1:1 Vert. Scale: As Noted			
Staff Bridge Branch - Unit 0224 Unit Leader: MH			
PBSJ 4601 DTC Boulevard Suite 700 Denver, CO 80237			

Colorado Department of Transportation
8833 South Wadsworth Court
Littleton, CO 80128
Phone: 303-972-9112 FAX: 303-972-9114
Region 6 RLB

As Constructed
No Revisions:
Revised:
Void:

SB SANTA FE TO EB C470 RAMP
DESIGN CRITERIA

Designer:	K. Saindon	Structure Numbers	F-16-YE
Detailer:	E. Schawo		
Sheet Subset:	Bridge	Subset Sheets: B4 of 72	

Project No./Code
ES6 0852-103
17679
Sheet Number 193

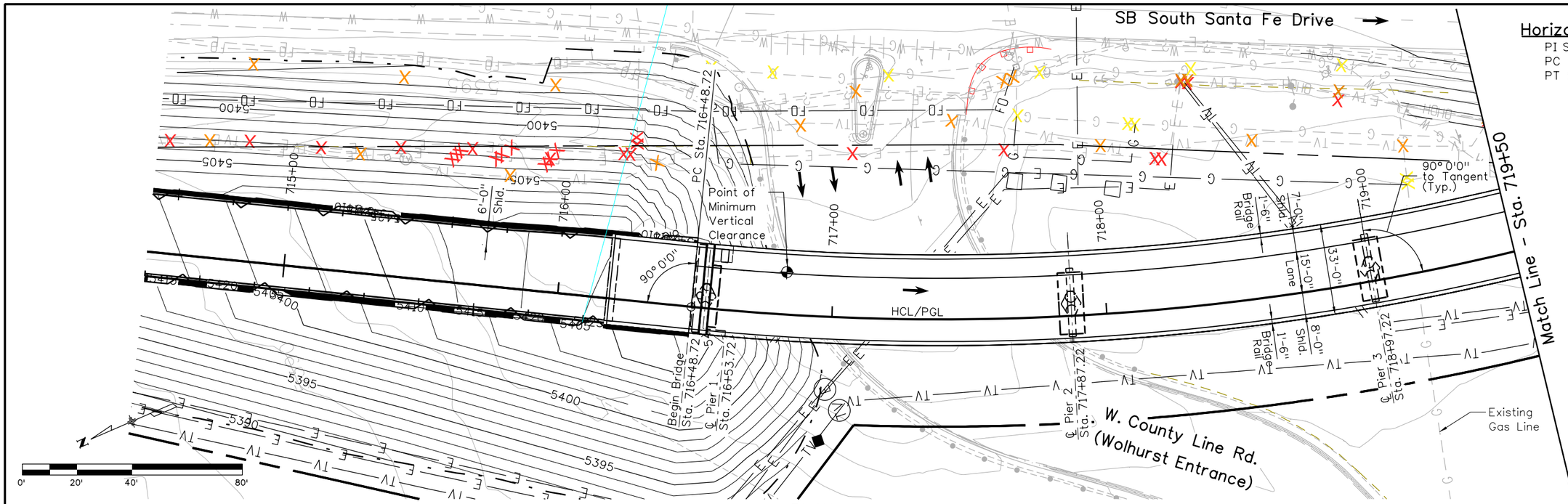

PLAN

Horizontal Curve Data

PI Sta. = 730+12.71
PC Sta. = 716+48.72
PT Sta. = 734+21.00
Δ = 113° 27'26"
T = 1363.99'
L = 1772.28'
R = 895.00'

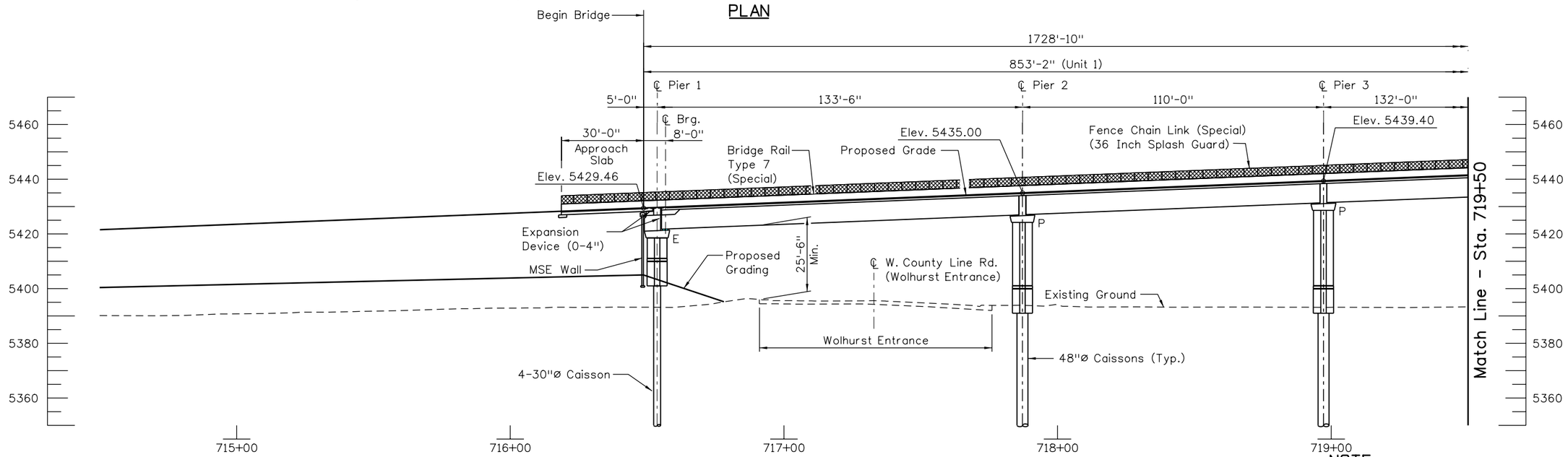

PROFILE
(ELEVATIONS TAKEN AT TOP OF FINISHED GRADE)

NOTE:
"P" indicates a hinge at column/pier cap interface.

Design			Detail			Quantities		
Designed By	KCS	07/09	Detailed By	ERS	08/09	Quantities By		
Checked By			Checked By	KCS	11/09	Checked By		

Revision Dates (Preliminary Stage Only) MM/YY

18026 1:50:50 PM S:\Tranproj\100002375\14679\Consultants\Bridge\Drawings\14679_pBD-P702.dgn

Print Date: 12/31/2009
File Name: 14679_pBD-P702.dgn
Horiz. Scale: 1:40 Vert. Scale: As Noted
Staff Bridge Branch - Unit 0224 Unit Leader: MH

PBSJ 4601 DTC Boulevard Suite 700 Denver, CO 80237

Sheet Revisions		
Date:	Comments	Init.

Colorado Department of Transportation
8833 South Wadsworth Court
Littleton, CO 80128
Phone: 303-972-9112 FAX: 303-972-9114
Region 6 RLB

As Constructed
No Revisions:
Revised:
Void:

SB SANTA FE TO EB C470 RAMP
GENERAL LAYOUT (1 OF 4)

Designer: K. Saindon
Detailer: E. Schawo
Sheet Subset: Bridge
Structure Numbers F-16-YE
Subset Sheets: B5 of 72

Project No./Code
ES6 0852-103
17679
Sheet Number 194

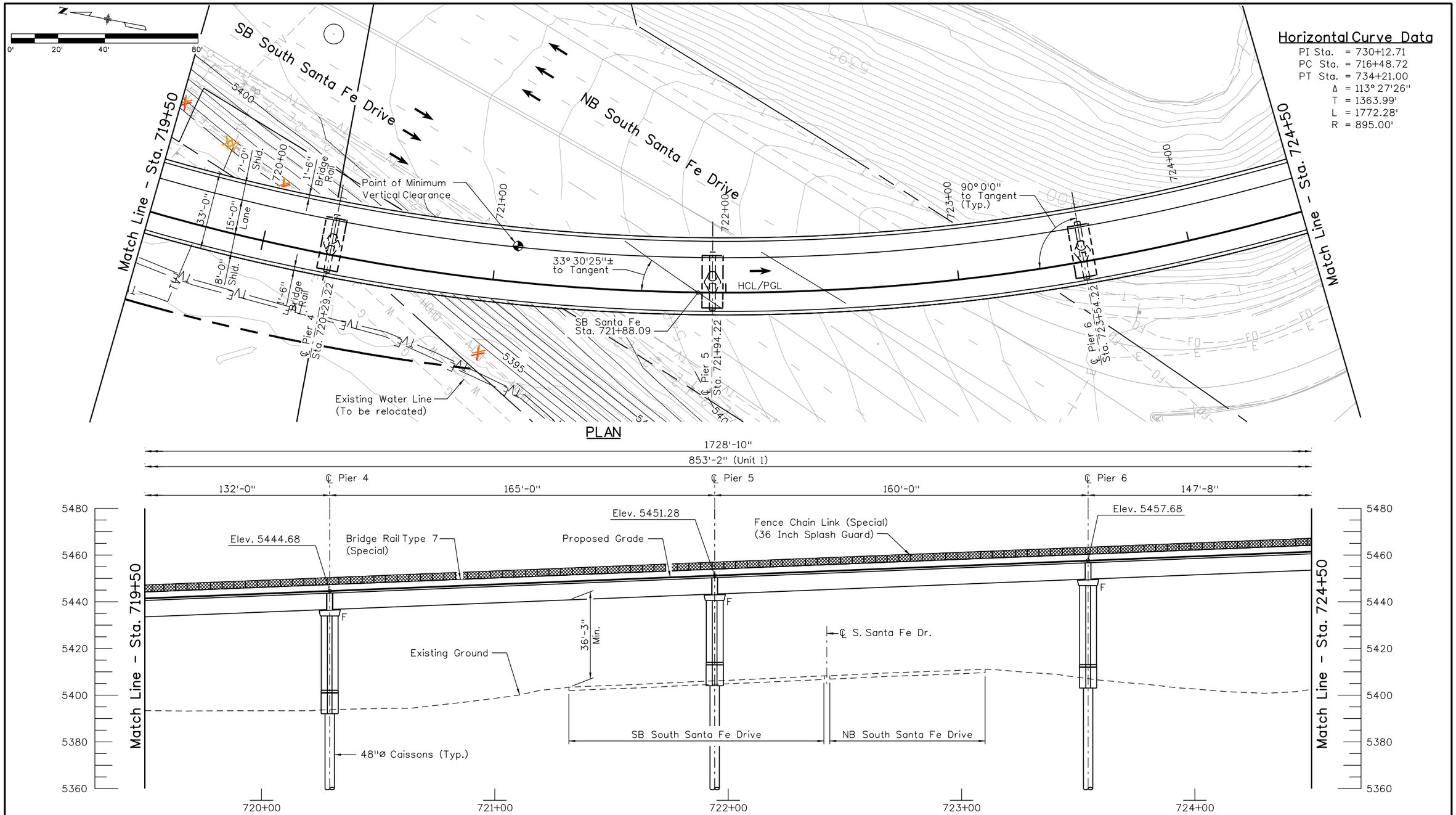

Revision Dates (Preliminary Stage Only)	
MM/YY	

Quantities					
	INITIAL	DATE		INITIAL	DATE
Quantities By			Detailed By		
Checked By			Checked By		

Design			Detail		
	INITIAL	DATE		INITIAL	DATE
Designed By	KCS	07/09	Detailed By	ERS	08/09
Checked By			Checked By		

18026 1:50:57 PM S:\Tranproj\100002375\14679\Consultants\Bridge\Drawings\14679_pBD-P703.dgn

Print Date: 12/31/2009
File Name: 14679_pBD-P703.dgn
Horiz. Scale: 1:40 Vert. Scale: As Noted
Staff Bridge Branch - Unit 0224 Unit Leader: MH

PBSJ 4601 DTC Boulevard Suite 700 Denver, CO 80237

Sheet Revisions		
Date:	Comments	Init.

Colorado Department of Transportation
8833 South Wadsworth Court
Littleton, CO 80128
Phone: 303-972-9112 FAX: 303-972-9114
Region 6 RLB

As Constructed
No Revisions:
Revised:
Void:

SB SANTA FE TO EB C470 RAMP
GENERAL LAYOUT (2 OF 4)

Designer: K. Saindon
Detailer: E. Schawo
Sheet Subset: Bridge
Structure Numbers: F-16-YE
Subset Sheets: B6 of 72

Project No./Code
ES6 0852-103
17679
Sheet Number 195

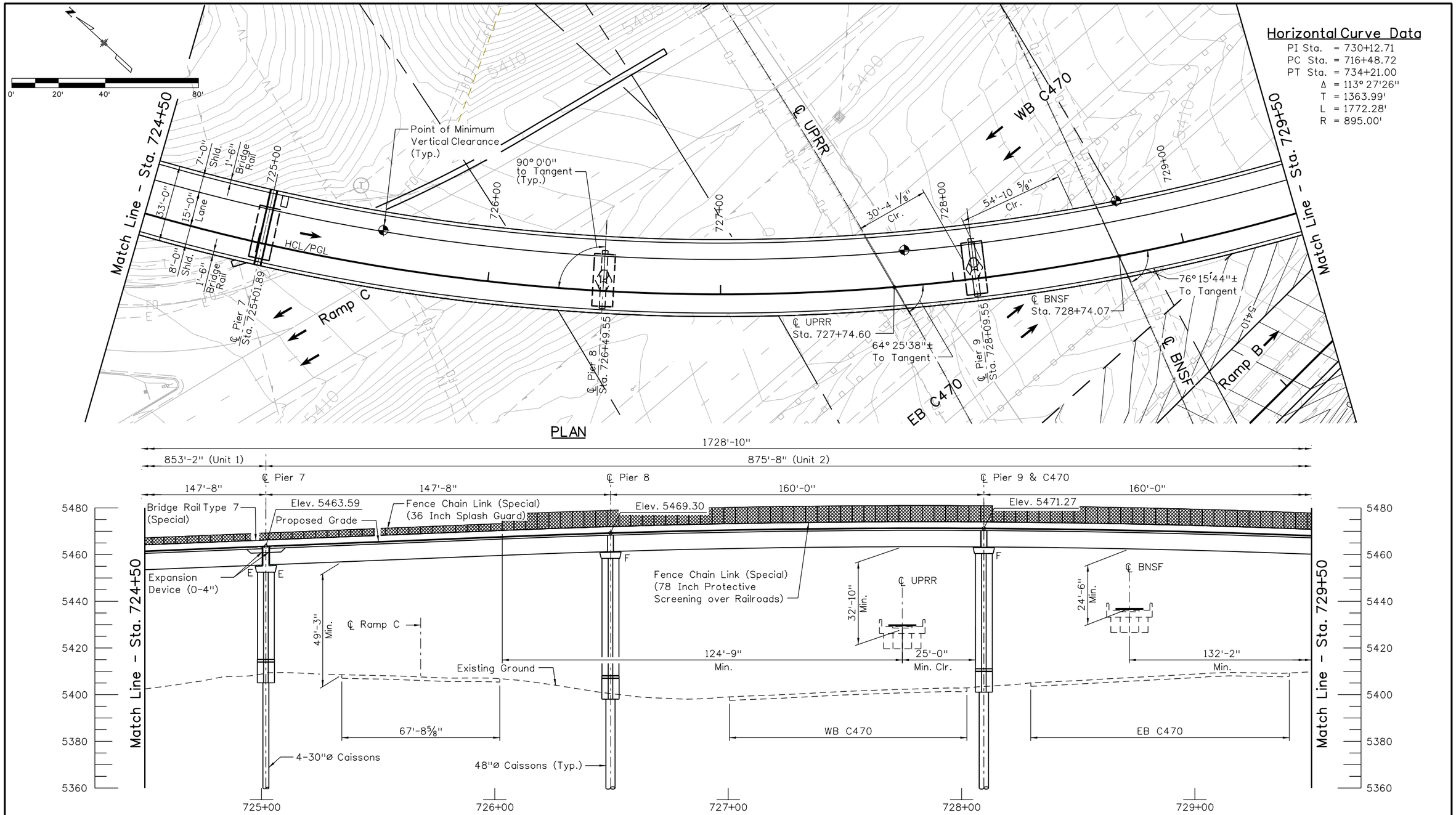

Design	INITIAL	DATE	Detail	INITIAL	DATE	Quantities	INITIAL	DATE
Designed By	KCS	07/09	Detailed By	ERS	08/09	Quantities By		
Checked By			Checked By	KCS	11/09	Checked By		

Revision Dates (Preliminary Stage Only)
MM/YY

18026 1:51:04 PM S:\Tranproj\100002375\14679\Consultants\Bridge\Drawings\14679_pBD-P704.dgn

Print Date: 12/31/2009
File Name: 14679_pBD-P704.dgn
Horiz. Scale: 1:40 Vert. Scale: As Noted
Staff Bridge Branch - Unit 0224 Unit Leader: MH

PBSJ 4601 DTC Boulevard Suite 700 Denver, CO 80237

Sheet Revisions		
Date:	Comments	Init.

Colorado Department of Transportation
8833 South Wadsworth Court
Littleton, CO 80128
Phone: 303-972-9112 FAX: 303-972-9114
Region 6 RLB

As Constructed
No Revisions:
Revised:
Void:

SB SANTA FE TO EB C470 RAMP
GENERAL LAYOUT (3 OF 4)

Designer: K. Saindon
Detailer: E. Schawo
Sheet Subset: Bridge
Structure Numbers F-16-YE
Subset Sheets: B7 of 72

Project No./Code
ES6 0852-103
17679
Sheet Number 196

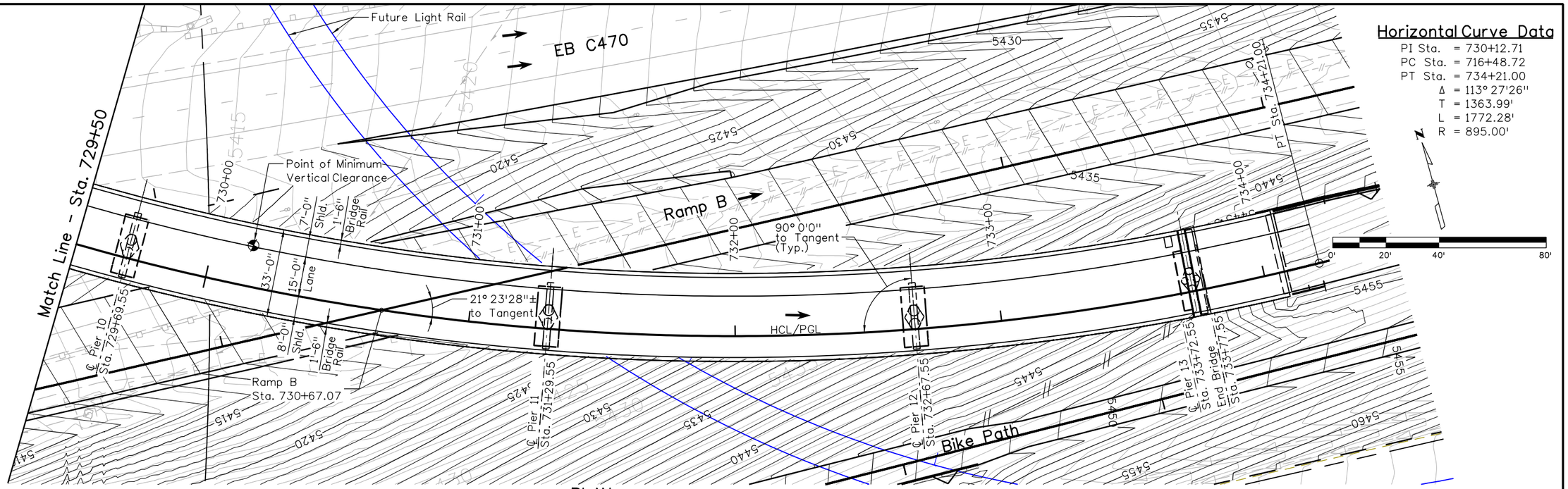

PLAN

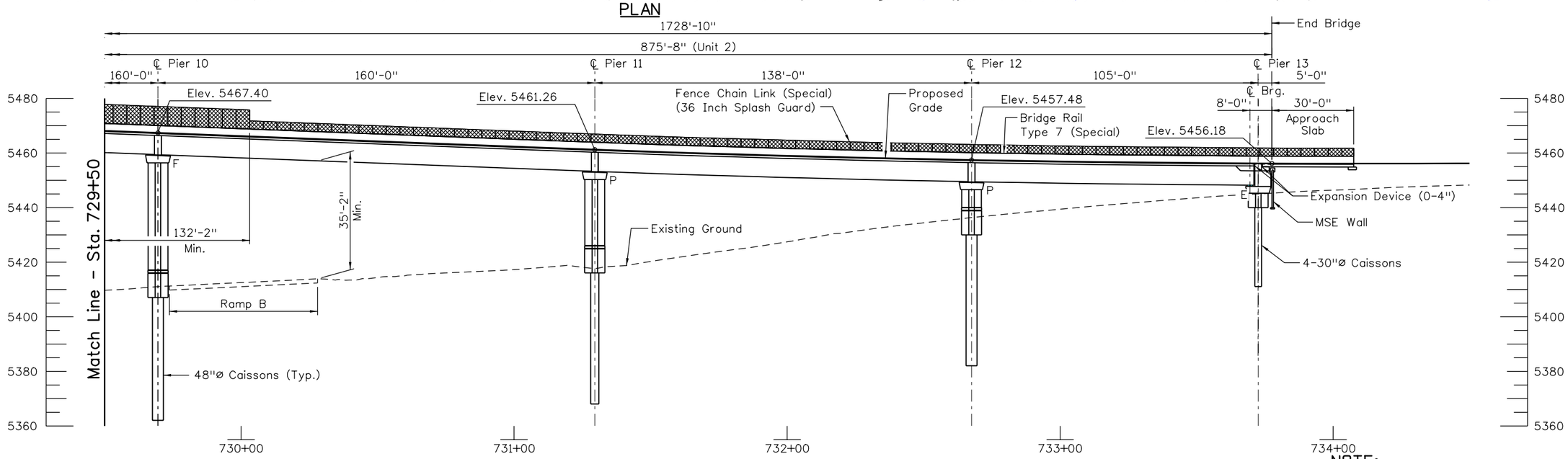

PROFILE

(ELEVATIONS TAKEN AT TOP OF FINISHED GRADE)

NOTE:

"P" indicates a hinge at column/pier cap interface.

Revision Dates (Preliminary Stage Only)	
MM/YY	

Quantities			
INITIAL	DATE		
Quantities By			
Checked By			

Detail			
INITIAL	DATE		
Detailed By	ERS	08/09	
Checked By	KCS	11/09	

Design			
INITIAL	DATE		
KCS	07/09		
Designed By			
Checked By			

18026 1:51:14 PM S:\Tranproj\1000002375\14679\Consultants\Bridge\Drawings\14679_pBD-P705.dgn

Print Date: 12/31/2009
File Name: 14679_pBD-P705.dgn
Horiz. Scale: 1:40 Vert. Scale: As Noted
Staff Bridge Branch - Unit 0224 Unit Leader: MH

PBSJ 4601 DTC Boulevard Suite 700 Denver, CO 80237

Sheet Revisions		
Date:	Comments	Init.

Colorado Department of Transportation
DOT DEPARTMENT OF TRANSPORTATION
8833 South Wadsworth Court
Littleton, CO 80128
Phone: 303-972-9112 FAX: 303-972-9114
Region 6 RLB

As Constructed
No Revisions:
Revised:
Void:

SB SANTA FE TO EB C470 RAMP
GENERAL LAYOUT (4 OF 4)

Designer: K. Saindon
Detailer: E. Schawo
Sheet Subset: Bridge
Structure Numbers F-16-YE
Subset Sheets: B8 of 72

Project No./Code
ES6 0852-103
17679
Sheet Number 197

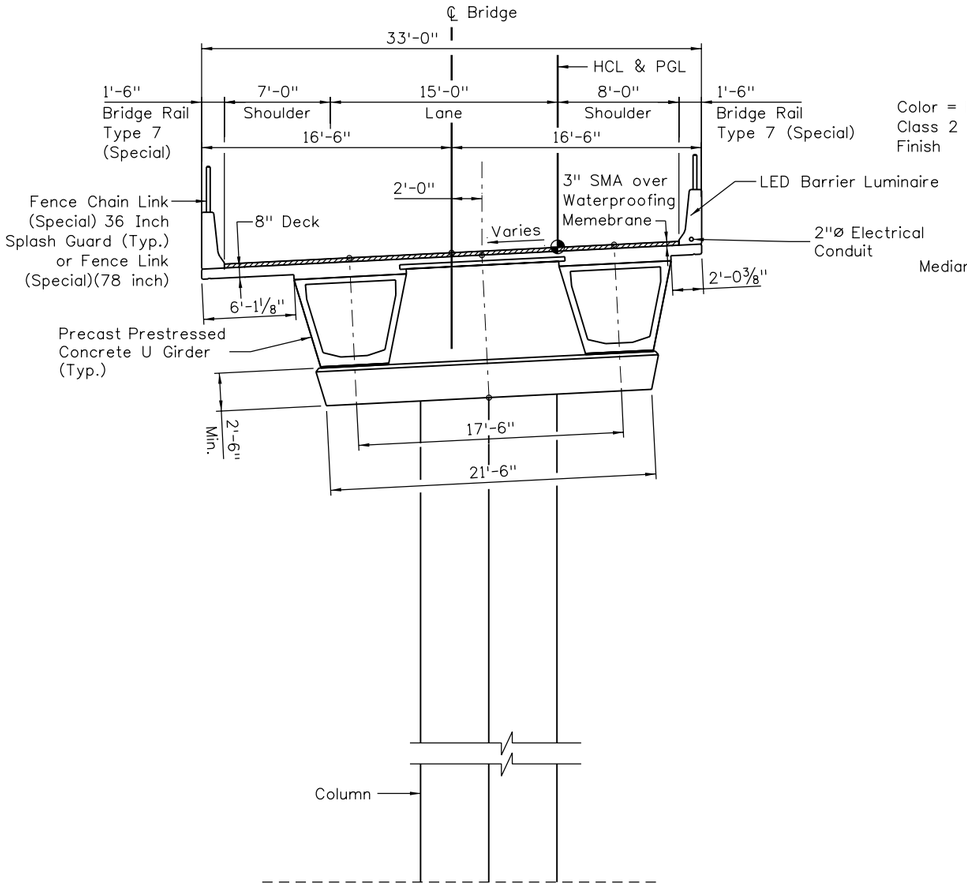

TYPICAL SECTION

PRESTRESSED CONCRETE GIRDER ALTERNATIVE

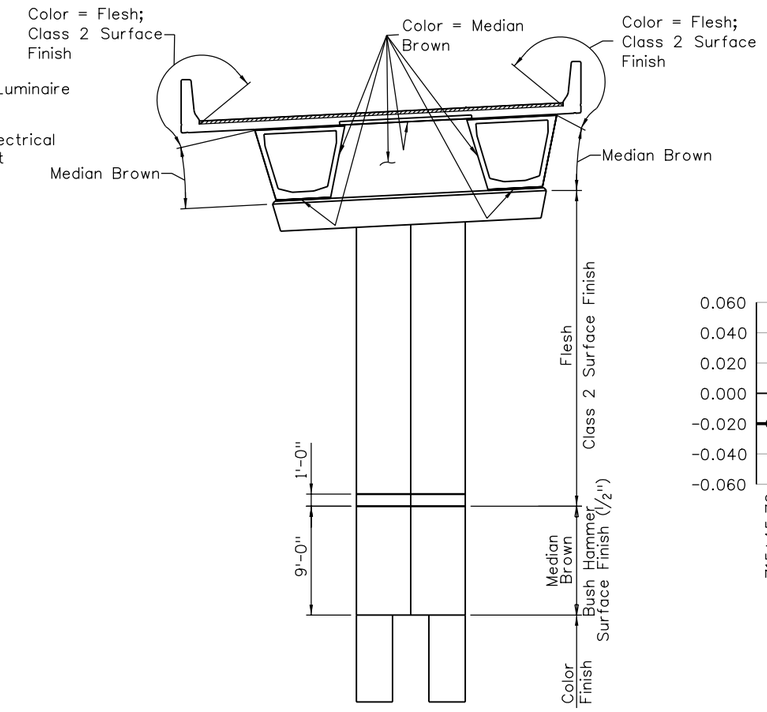

CONCRETE COLOR & FINISH DIAGRAM

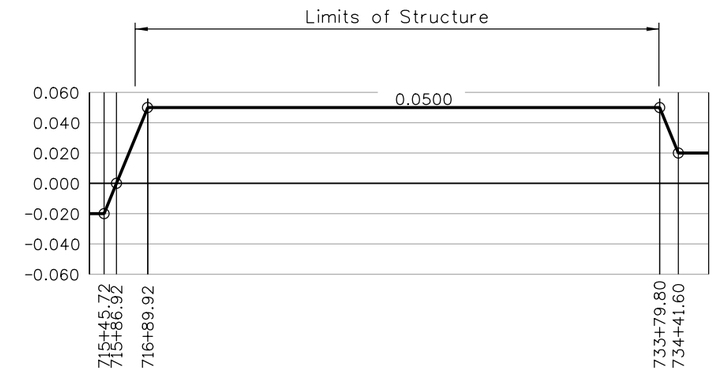

SUPERELEVATION DIAGRAM

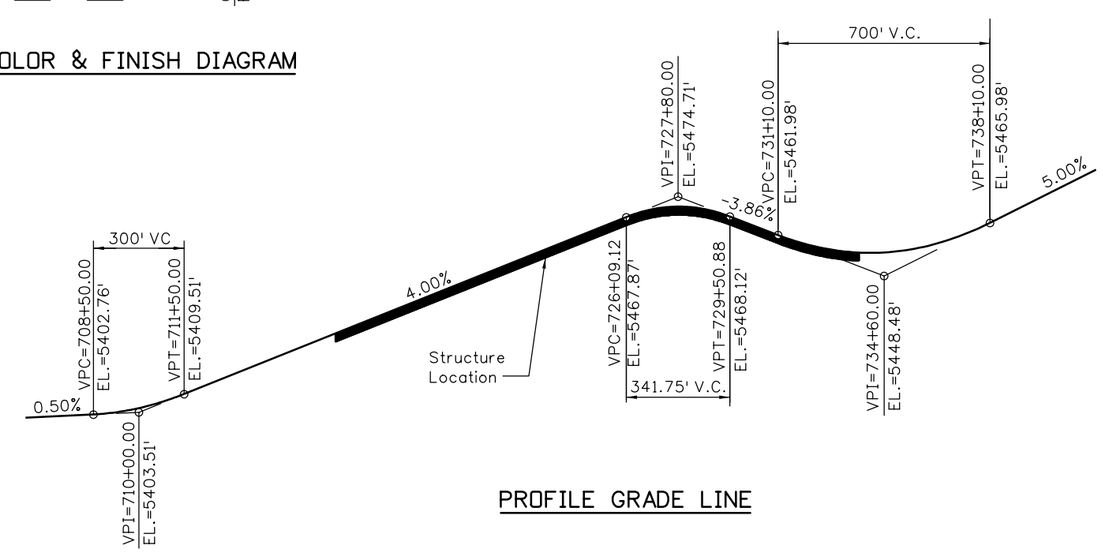

PROFILE GRADE LINE

Quantities			
		INITIAL	DATE
Quantities By			
Checked By			

Detail			
	INITIAL	DATE	
Detailed By	ERS	08/09	
Checked By	KCS	11/09	

Design			
	INITIAL	DATE	
Designed By	KCS	07/09	
Checked By			

Revision Dates	
MM/YY	(Preliminary Stage Only)

18026 1:51:20 PM S:\Tranproj\100002375\14679\Consultants\Bridge\Drawings\14679_pBD-P706.dgn

Print Date: 12/31/2009
File Name: 14679_pBD-P706.dgn
Horiz. Scale: 1:10 Vert. Scale: As Noted
Staff Bridge Branch - Unit 0224 Unit Leader: MH

PBSJ 4601 DTC Boulevard Suite 700 Denver, CO 80237

Sheet Revisions		
Date:	Comments	Init.

Colorado Department of Transportation
DOT DEPARTMENT OF TRANSPORTATION
8833 South Wadsworth Court
Littleton, CO 80128
Phone: 303-972-9112 FAX: 303-972-9114
Region 6 RLB

As Constructed
No Revisions:
Revised:
Void:

SB SANTA FE TO EB C470 RAMP
BRIDGE TYPICAL SECTION

Designer: K. Saindon
Detailer: E. Schawo
Sheet Subset: Bridge
Structure Numbers F-16-YE
Subset Sheets: B9 of 72

Project No./Code
ES6 0852-103
17679
Sheet Number 198

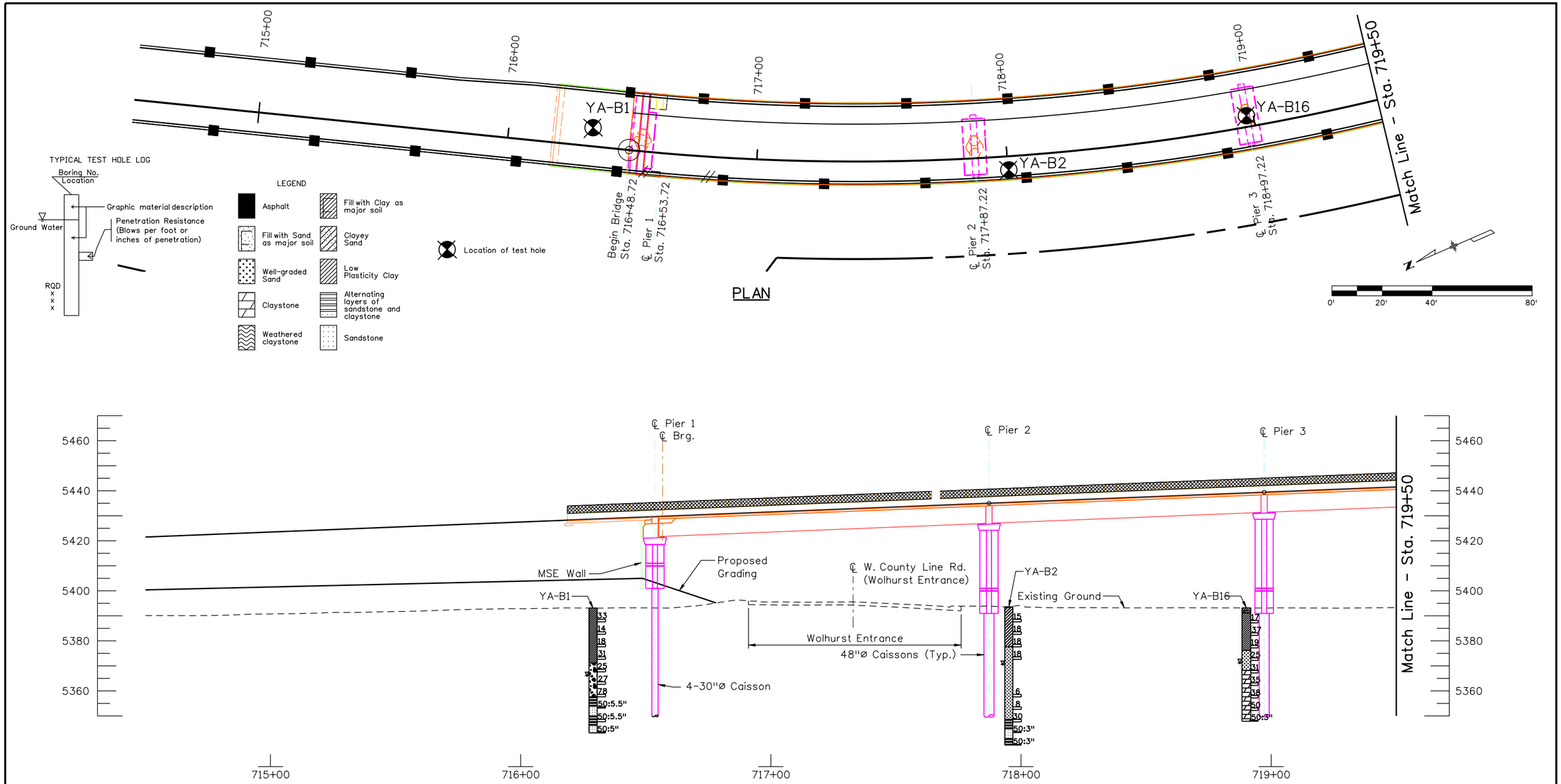

Notes:
1. Refer to Geotech Report for lab test results.
2. Boulders and groundwater may be encountered at any depth.

Yeh and Associates, Inc.
Consulting Engineers & Scientists

Print Date: 12/30/2009	Sheet Revisions	Colorado Department of Transportation	As Constructed
File Name: 14679_pBD-P707.dgn	Date: / Comments / Init.	8833 South Wadsworth Court Littleton, CO 80128 Phone: 303-972-9112 FAX: 303-972-9114	No Revisions:
Horiz. Scale: 1:40 Vert. Scale: As Noted		Region 6 RLB	Revised:
Staff Bridge Branch - Unit 0224 Unit Leader: MH			Void:
PBSJ 4601 DTC Boulevard, Suite 700, Denver, CO 80237			

SB SANTA FE TO EB C470 RAMP ENGINEERING GEOLOGY (1 OF 4)			Project No./Code
			ES6 0852-103
Designer:	Structure Numbers	F-16-YE	17679
Detailer:			
Sheet Subset: Bridge	Subset Sheets: B10 of 72		Sheet Number 199

Revision Dates (Preliminary Stage Only)	
MM/YY	

Quantities		
	INITIAL	DATE
Quantities By		
Checked By		

Detail			
	INITIAL	DATE	
Detailed By	MJW	12/09	Quantities By
Checked By	TMS	12/09	Checked By

Design			
	INITIAL	DATE	
Designed By	TMS	12/09	Detailed By
Checked By	TMS	12/09	Checked By

Mike Walz 11:39:50 AM W:\2009 Projects\29-023 C470 and Sante Fe\dwgs\from PBS&J\14679_pBD-P707.dgn

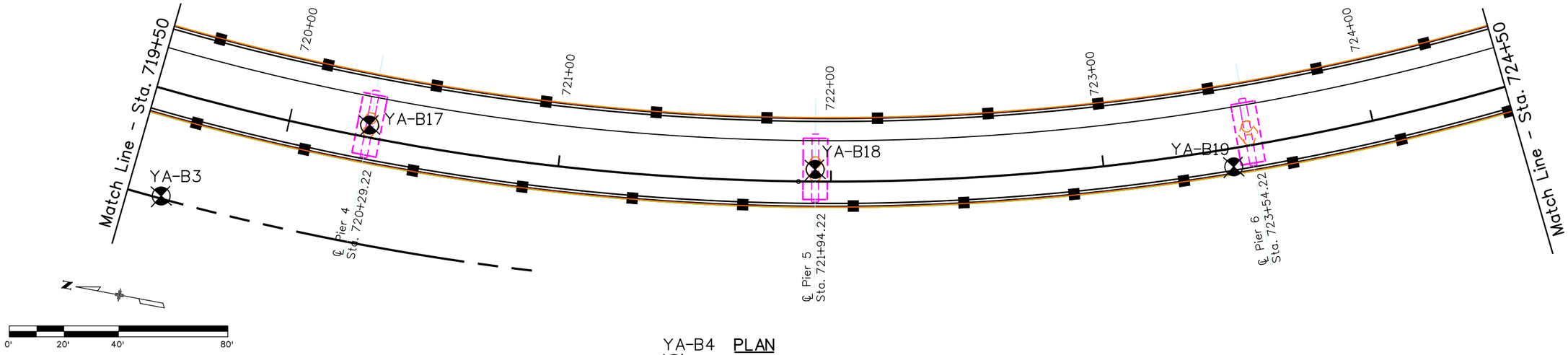

YA-B4 **PLAN**

YA-B5

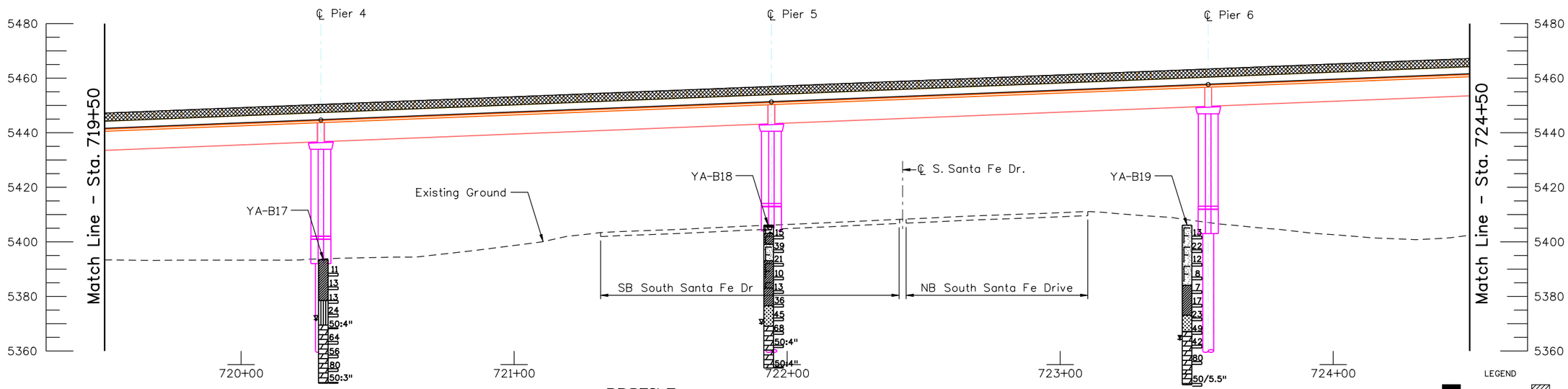

PROFILE

(ELEVATIONS TAKEN AT TOP OF FINSHED GRADE)

Notes:
1. Refer to Geotech Report for lab test results.
2. Boulders and groundwater may be encountered at any depth.

Location of test hole

TYPICAL TEST HOLE LOG

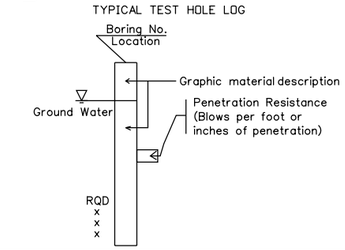

LEGEND

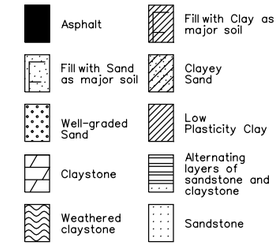

Yeh and Associates, Inc.
Consulting Engineers & Scientists

Print Date: 12/30/2009	Sheet Revisions	Colorado Department of Transportation	As Constructed
File Name: 14679_pBD-P708.dgn	Date: / Comments / Init.	8833 South Wadsworth Court, Littleton, CO 80128, Phone: 303-972-9112 FAX: 303-972-9114	No Revisions:
Horiz. Scale: 1:40 Vert. Scale: As Noted		Region 6 RLB	Revised:
Staff Bridge Branch - Unit 0224 Unit Leader: MH			Void:
PBSJ 4601 DTC Boulevard, Suite 700, Denver, CO 80237			

SB SANTA FE TO EB C470 RAMP
ENGINEERING GEOLOGY (2 OF 4)

Designer:	Structure Numbers	F-16-YE	Project No./Code: ES6 0852-103
Detailer:			17679
Sheet Subset: Bridge	Subset Sheets: B11 of 72		Sheet Number 200

Revision Dates (Preliminary Stage Only)
MM/YY

Design			Detail			Quantities		
	INITIAL	DATE		INITIAL	DATE		INITIAL	DATE
Designed By	TMS	12/09	Detailed By	MJW	12/09	Quantities By		
Checked By	TMS	12/09	Checked By	TMS	12/09	Checked By		

Mike Walz 11:37:45 AM W:\2009 Projects\29-023 C470 and Sante Fe\dwgs\from PBS&J\14679_pBD-P708.dgn

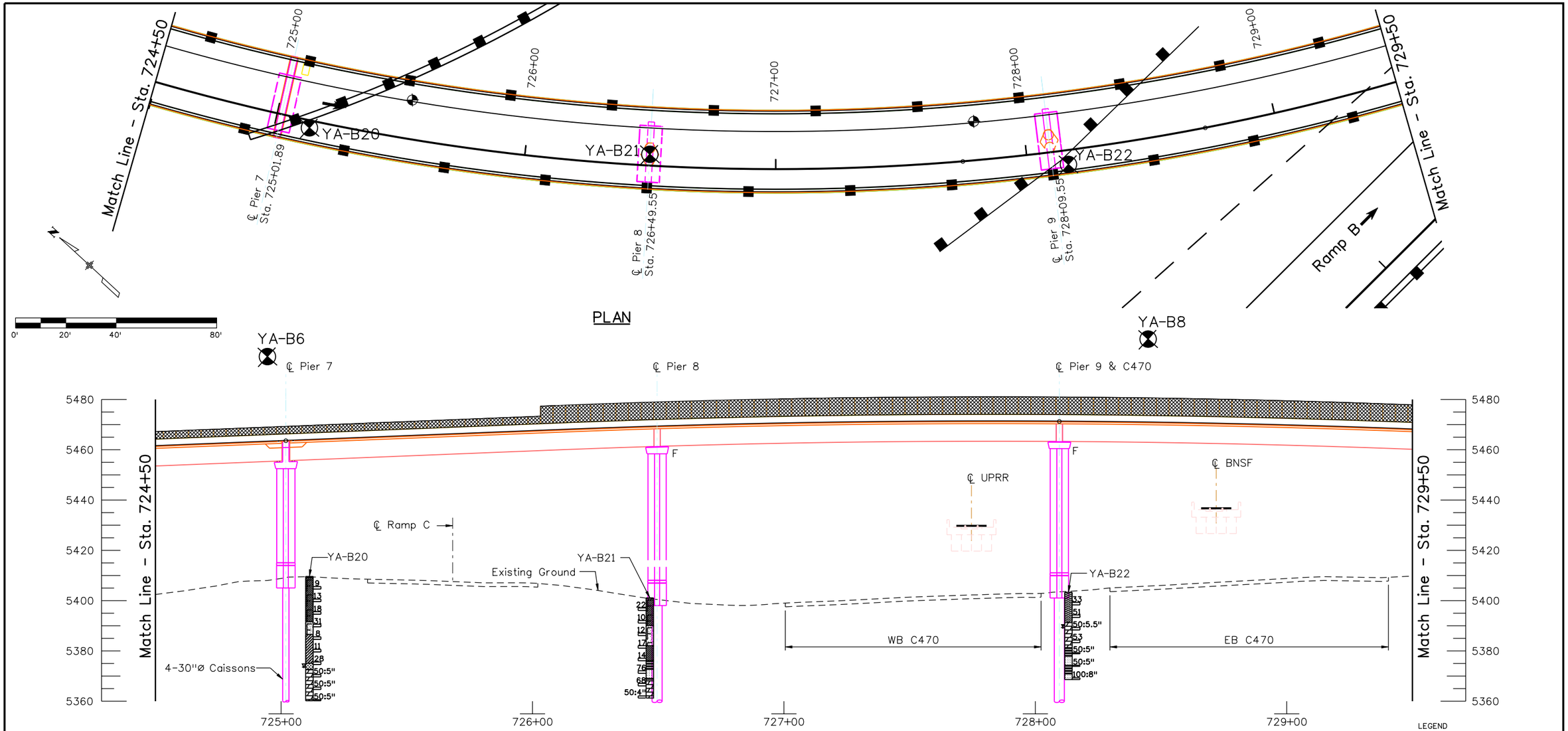

Notes:
1. Refer to Geotech Report for lab test results.
2. Boulders and groundwater may be encountered at any depth.

Location of test hole

TYPICAL TEST HOLE LOG

Boring No.
Location
Graphic material description
Ground Water
Penetration Resistance (Blows per foot or inches of penetration)
RQD
x
x
x

LEGEND

- Asphalt
- Fill with Clay as major soil
- Fill with Sand as major soil
- Clayey Sand
- Well-graded Sand
- Low Plasticity Clay
- Claystone
- Alternating layers of sandstone and claystone
- Weathered claystone
- Sandstone

Yeh and Associates, Inc.
Consulting Engineers & Scientists

Print Date: 12/30/2009	Sheet Revisions	Colorado Department of Transportation	As Constructed
File Name: 14679_pBD-P709.dgn	Date: / Comments / Init.	8833 South Wadsworth Court Littleton, CO 80128 Phone: 303-972-9112 FAX: 303-972-9114	No Revisions:
Horiz. Scale: 1:40 Vert. Scale: As Noted		Region 6 RLB	Revised:
Staff Bridge Branch - Unit 0224 Unit Leader: MH			Void:
PBSJ 4601 DTC Boulevard, Suite 700, Denver, CO 80237			

SB SANTA FE TO EB C470 RAMP ENGINEERING GEOLOGY (3 OF 4)			Project No./Code
Designer:	Structure Numbers	F-16-YE	ES6 0852-103
Detailer:			17679
Sheet Subset: Bridge	Subset Sheets: B12 of 72		Sheet Number 201

Revision Dates (Preliminary Stage Only)	
MM/YY	

Design			Detail			Quantities		
	INITIAL	DATE		INITIAL	DATE		INITIAL	DATE
Designed By	TMS	12/09	Detailed By	MJW	12/09	Quantities By		
Checked By	TMS	12/09	Checked By	TMS	12/09	Checked By		

Mike Walz 11:42:06 AM W:\2009 Projects\29-023 C470 and Sante Fe\dwgs\from PBS&J\14679_pBD-P709.dgn

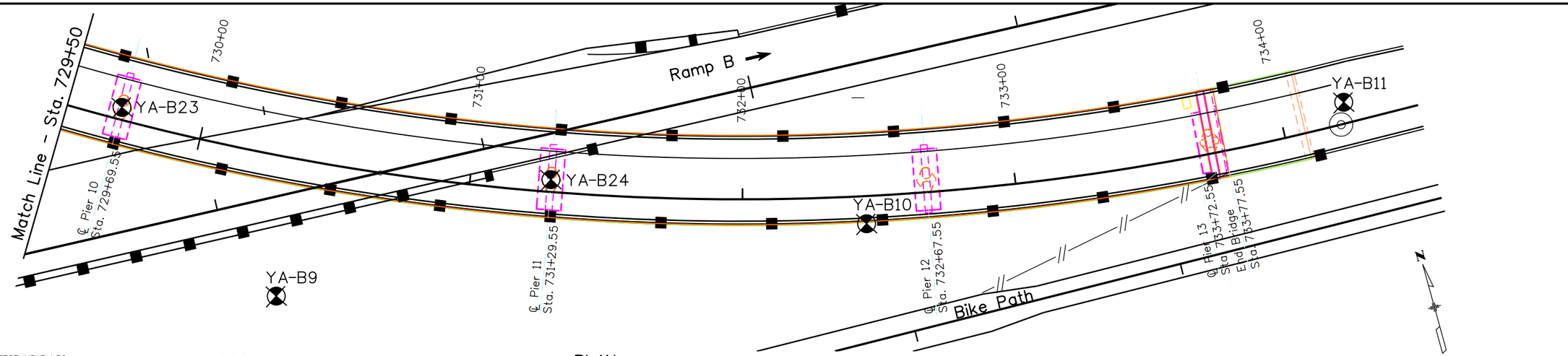

PLAN

TYPICAL TEST HOLE LOG

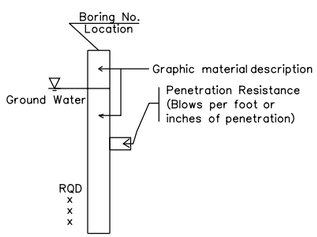

LEGEND

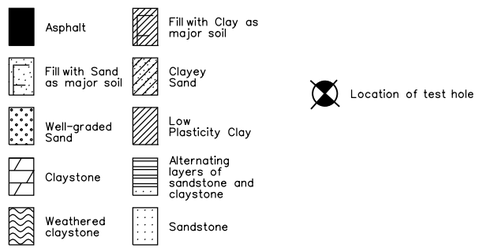

Location of test hole

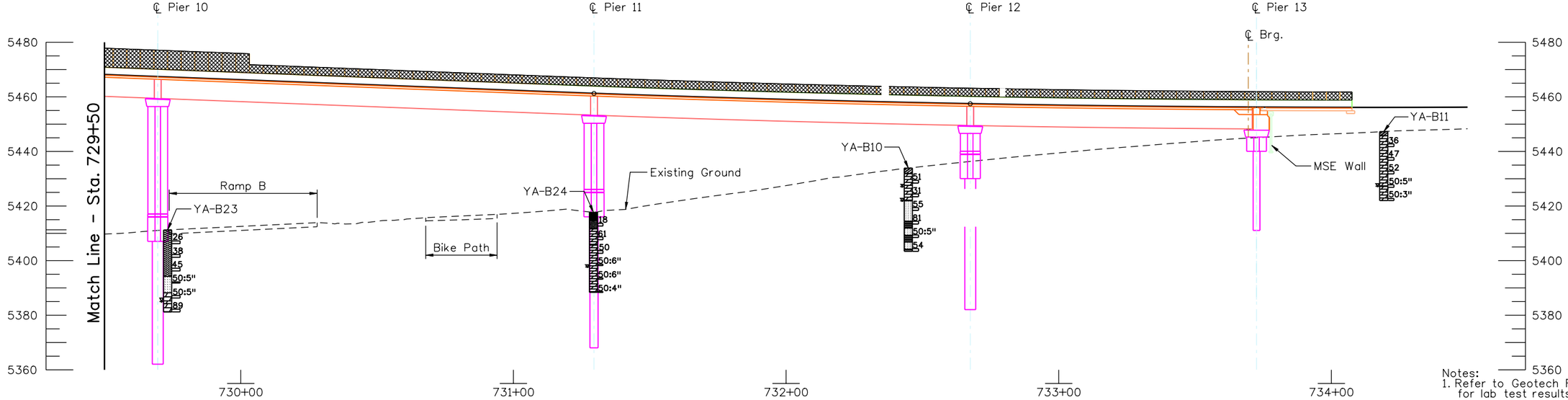

PROFILE
(ELEVATIONS TAKEN AT TOP OF FINSHED GRADE)

Notes:
1. Refer to Geotech Report for lab test results.
2. Boulders and groundwater may be encountered at any depth.

Yeh and Associates, Inc.
Consulting Engineers & Scientists

Print Date: 12/31/2009	Sheet Revisions		
File Name: 14679_pBD-P710.dgn	Date:	Comments	Init.
Horiz. Scale: 1:40 Vert. Scale: As Noted			
Staff Bridge Branch - Unit 0224 Unit Leader: MH			

PBSJ
4601 DTC Boulevard
Suite 700
Denver, CO 80237

Colorado Department of Transportation
DOT
DEPARTMENT OF TRANSPORTATION
8833 South Wadsworth Court
Littleton, CO 80128
Phone: 303-972-9112 FAX: 303-972-9114
Region 6 RLB

As Constructed
No Revisions:
Revised:
Void:

SB SANTA FE TO EB C470 RAMP
ENGINEERING GEOLOGY (4 OF 4)

Designer:		Structure Numbers	F-16-YE
Detailer:			
Sheet Subset:	Bridge	Subset Sheets: B13 of 72	

Project No./Code
ES6 0852-103
17679
Sheet Number 202

Revision Dates (Preliminary Stage Only)	
MM/YY	

Design	INITIAL	DATE
Designed By	TMS	12/09
Checked By	TMS	12/09

Detail	INITIAL	DATE
Detailed By	MJW	12/09
Checked By	TMS	12/09

Quantities	INITIAL	DATE
Quantities By		
Checked By		

Mike Walz 9:20:48 AM W:\2009 Projects\29-023 C470 and Sante Fe\dwgs\from PBS&J\14679_pBD-P710.dgn

Horizontal Curve Data

PI Sta.	=	730+12.71
PC Sta.	=	716+48.72
PT Sta.	=	734+21.00
Δ	=	113° 27'26"
T	=	1363.99'
L	=	1772.28'
R	=	895.00'

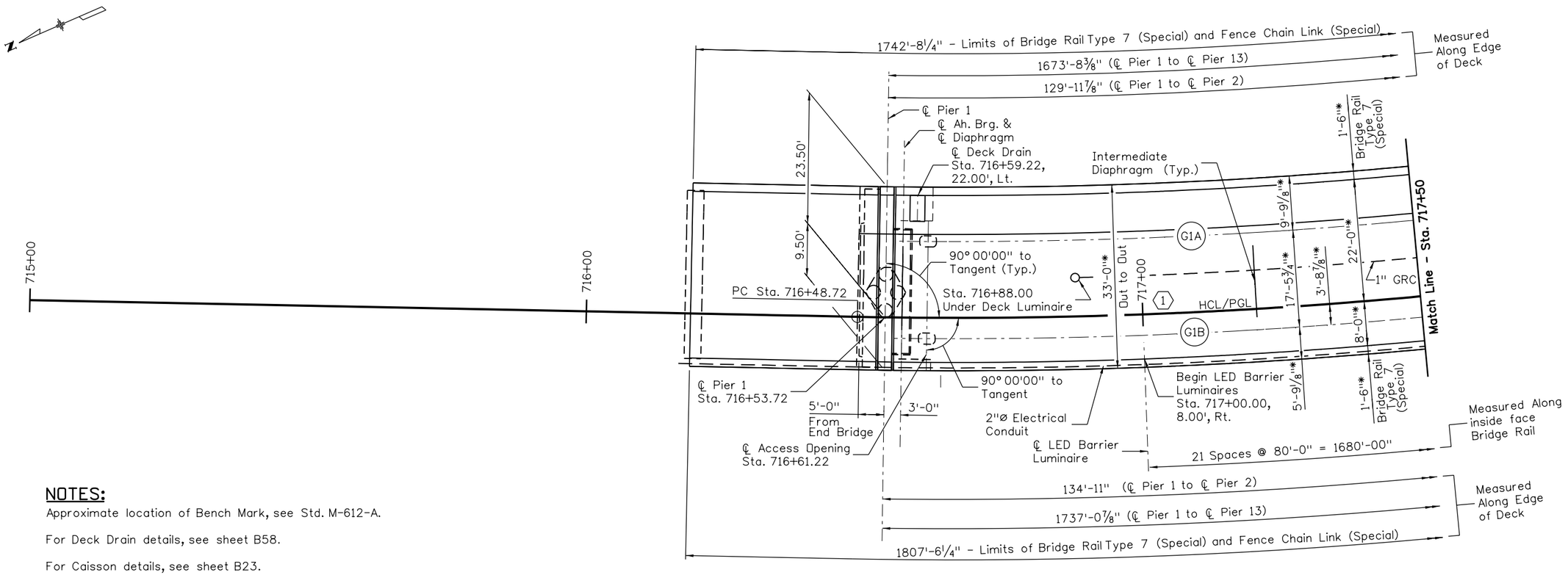

NOTES:

Approximate location of Bench Mark, see Std. M-612-A.

For Deck Drain details, see sheet B58.

For Caisson details, see sheet B23.

* Indicates radial dimension.

KEYNOTE:

(1) Place Intermediate Diaphragm in middle ⅓ of each span.

CONSTRUCTION LAYOUT

0' 10' 20' 40'

Revision Dates	(Preliminary Stage Only)
MM/YY	

Quantities			
	INITIAL	DATE	
Quantities By			
Checked By			

Detail			
	INITIAL	DATE	
Detailed By	ERS	09/09	
Checked By	KCS	11/09	

Design			
	INITIAL	DATE	
Designed By	KCS	09/09	
Checked By			

18026 1:51:27 PM S:\Tranproj\100002375\14679\Consultants\Bridge\Drawings\14679_pBD-P711.dgn

Print Date: 12/31/2009
File Name: 14679_pBD-P711.dgn
Horiz. Scale: 1:20 Vert. Scale: As Noted
Staff Bridge Branch - Unit 0224 Unit Leader: MH

PBSJ 4601 DTC Boulevard Suite 700 Denver, CO 80237

Sheet Revisions		
Date:	Comments	Init.

Colorado Department of Transportation
DOT DEPARTMENT OF TRANSPORTATION
8833 South Wadsworth Court
Littleton, CO 80128
Phone: 303-972-9112 FAX: 303-972-9114
Region 6 RLB

As Constructed
No Revisions:
Revised:
Void:

SB SANTA FE TO EB C470 RAMP
CONSTRUCTION LAYOUT (1 OF 8)

Designer:	K. Saindon	Structure Numbers	F-16-YE
Detailer:	E. Schawo		
Sheet Subset:	Bridge	Subset Sheets: B14 of 72	

Project No./Code
ES6 0852-103
17679
Sheet Number 203

Horizontal Curve Data

PI Sta.	=	730+12.71
PC Sta.	=	716+48.72
PT Sta.	=	734+21.00
Δ	=	113° 27'26"
T	=	1363.99'
L	=	1772.28'
R	=	895.00'

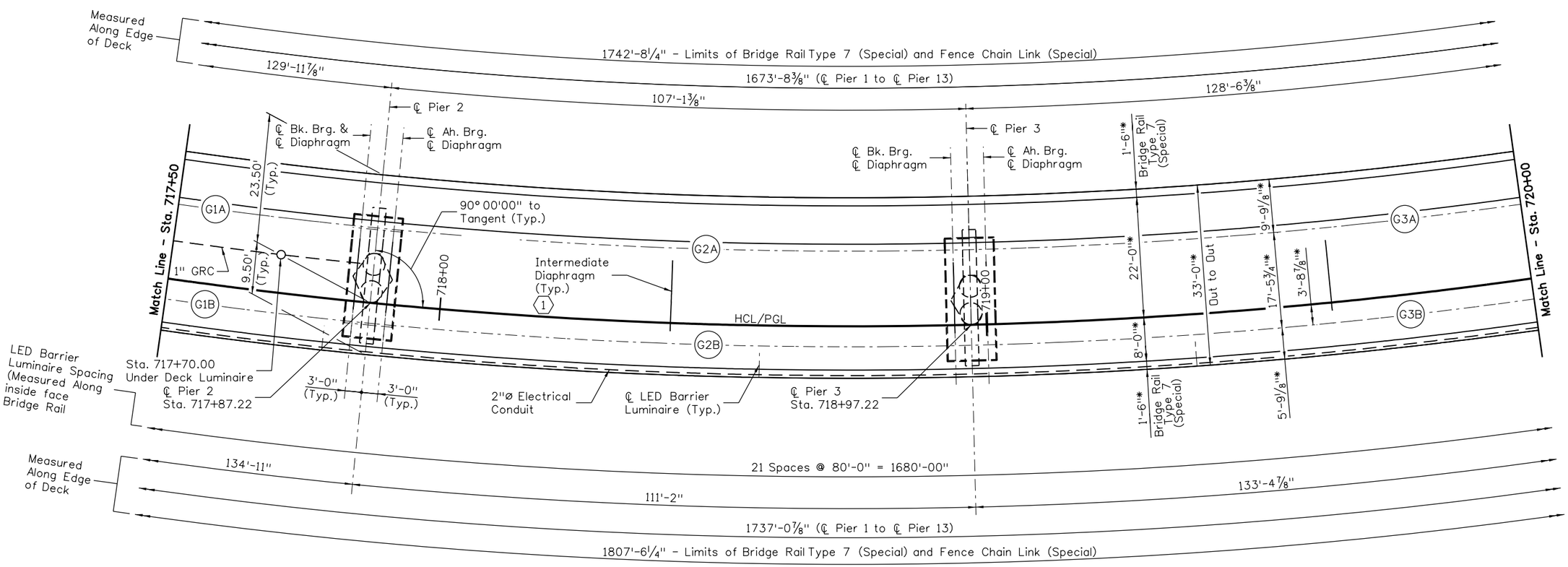

CONSTRUCTION LAYOUT

NOTES:

For additional information and notes, see Sheet B14.

* Indicates radial dimension.

KEYNOTE:

1. Place Intermediate Diaprhagm in middle ⅓ of each span.

0' 10' 20' 40'

Revision Dates	(Preliminary Stage Only)

Quantities	
INITIAL	DATE
Quantities By	
Checked By	

Detail			
INITIAL	DATE	INITIAL	DATE
ERS	09/09	Quantities By	
KCS	11/09	Checked By	

Design			
INITIAL	DATE		
KCS	09/09	Detailed By	
		Checked By	

18026 1:51:31 PM S:\Transproj\100002375\14679\Consultants\Bridge\Drawings\14679_pBD-P712.dgn

Print Date: 12/31/2009
File Name: 14679_pBD-P712.dgn
Horiz. Scale: 1:20 Vert. Scale: As Noted
Staff Bridge Branch - Unit 0224 Unit Leader: MH

PBSJ 4601 DTC Boulevard Suite 700 Denver, CO 80237

Sheet Revisions		
Date:	Comments	Init.

Colorado Department of Transportation
8833 South Wadsworth Court
Littleton, CO 80128
Phone: 303-972-9112 FAX: 303-972-9114
Region 6 RLB

As Constructed
No Revisions:
Revised:
Void:

SB SANTA FE TO EB C470 RAMP
CONSTRUCTION LAYOUT (2 OF 8)

Designer:	K. Saindon	Structure Numbers	F-16-YE
Detailer:	E. Schawo		
Sheet Subset:	Bridge	Subset Sheets: B15 of 72	

Project No./Code
ES6 0852-103
17679
Sheet Number 204

Horizontal Curve Data

PI Sta.	=	730+12.71
PC Sta.	=	716+48.72
PT Sta.	=	734+21.00
Δ	=	113° 27'26"
T	=	1363.99'
L	=	1772.28'
R	=	895.00'

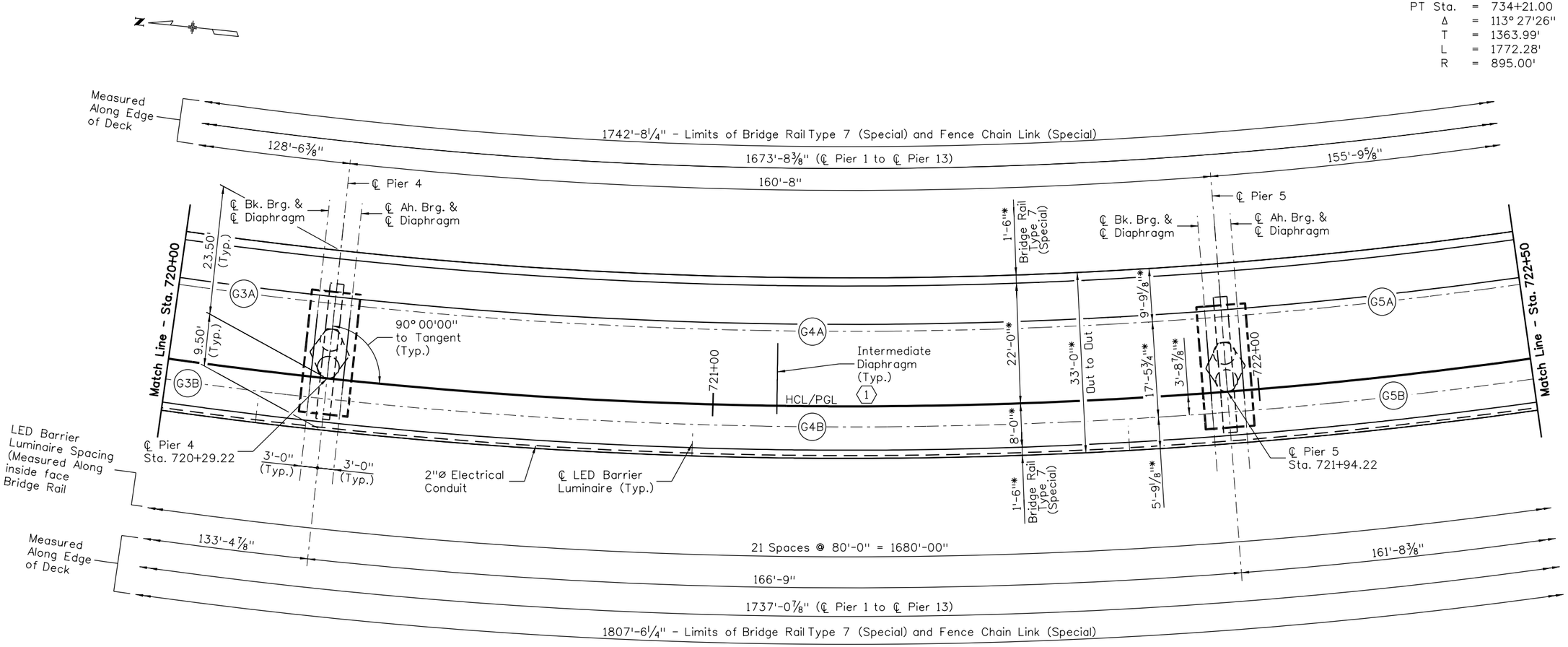

CONSTRUCTION LAYOUT

NOTES:

For additional information and notes, see Sheet B14.

* Indicates radial dimension.

KEYNOTE:

(1) Place Intermediate Diaphragm in middle ⅓ of each span.

0' 10' 20' 40'

Quantities	INITIAL	DATE
Quantities By		
Checked By		

Revision Dates (Preliminary Stage Only)

Detail	INITIAL	DATE
Detailed By	ERS	09/09
Checked By	KCS	11/09

Design	INITIAL	DATE
Designed By	KCS	09/09
Checked By		

18026 1:51:35 PM S:\Tranproj\100002375\14679\Consultants\Bridge\Drawings\14679_pBD-P713.dgn

Print Date: 12/31/2009
File Name: 14679_pBD-P713.dgn
Horiz. Scale: 1:20 Vert. Scale: As Noted
Staff Bridge Branch - Unit 0224 Unit Leader: MH

PBSJ 4601 DTC Boulevard Suite 700 Denver, CO 80237

Sheet Revisions		
Date:	Comments	Init.

Colorado Department of Transportation
DOT DEPARTMENT OF TRANSPORTATION
8833 South Wadsworth Court
Littleton, CO 80128
Phone: 303-972-9112 FAX: 303-972-9114
Region 6 RLB

As Constructed
No Revisions:
Revised:
Void:

SB SANTA FE TO EB C470 RAMP
CONSTRUCTION LAYOUT (3 OF 8)

Designer:	K. Saindon	Structure Numbers	F-16-YE
Detailer:	E. Schawo		
Sheet Subset:	Bridge	Subset Sheets: B16 of 72	

Project No./Code
ES6 0852-103
17679
Sheet Number 205

Horizontal Curve Data

PI Sta.	=	730+12.71
PC Sta.	=	716+48.72
PT Sta.	=	734+21.00
Δ	=	113° 27'26"
T	=	1363.99'
L	=	1772.28'
R	=	895.00'

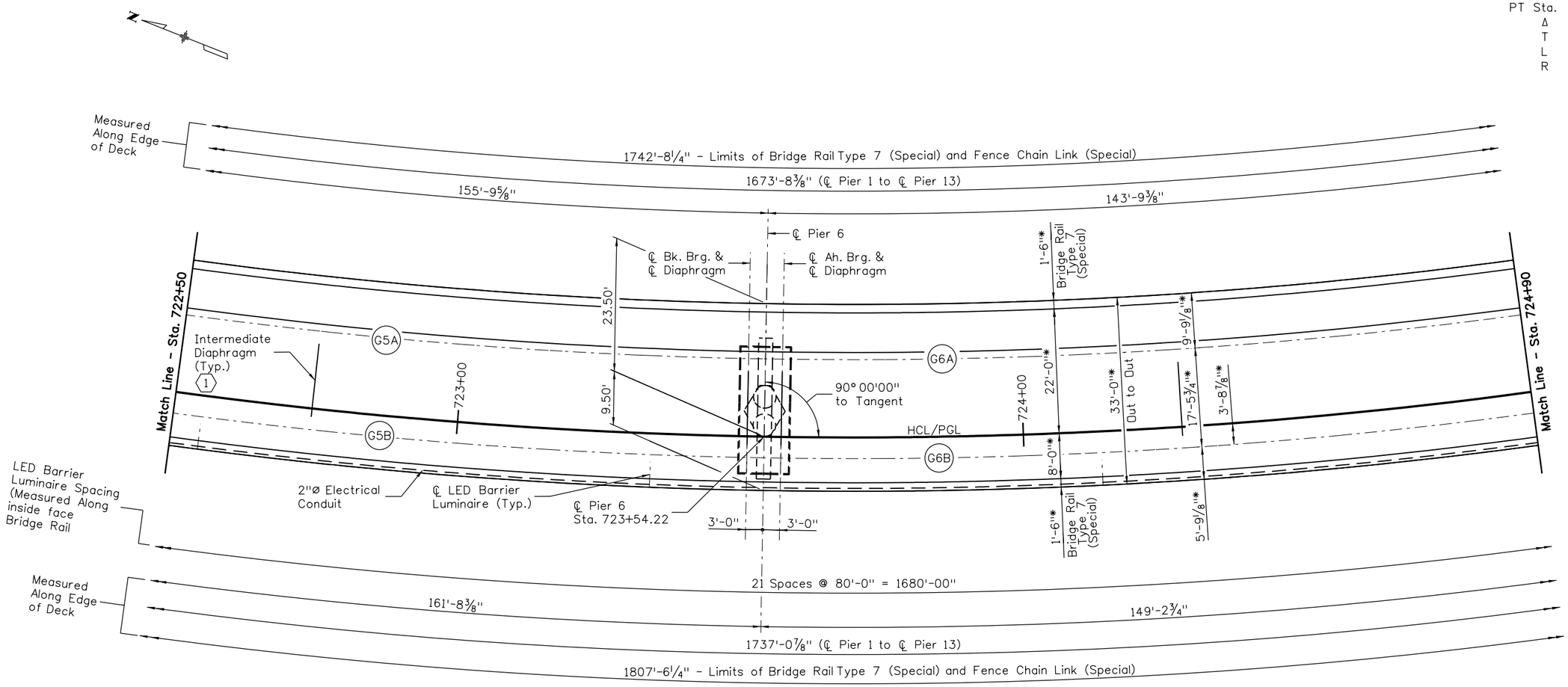

CONSTRUCTION LAYOUT

NOTES:

For additional information and notes, see Sheet B14.

* Indicates radial dimension.

KEYNOTE:

1. Place Intermediate Diaprhagm in middle ⅓ of each span.

0' 10' 20' 40'

Revision Dates	(Preliminary Stage Only)

Quantities	
INITIAL	DATE
Quantities By	
Checked By	

Detail			
INITIAL	DATE	INITIAL	DATE
Detailed By		ERS	09/09
Checked By		KCS	11/09

Design		
INITIAL	DATE	
KCS	09/09	
Designed By		
Checked By		

18026 1:51:38 PM S:\Tranproj\100002375\14679\Consultants\Bridge\Drawings\14679_pBD-P714.dgn

Print Date: 12/31/2009
File Name: 14679_pBD-P714.dgn
Horiz. Scale: 1:20 Vert. Scale: As Noted
Staff Bridge Branch - Unit 0224 Unit Leader: MH

PBSJ 4601 DTC Boulevard Suite 700 Denver, CO 80237

Sheet Revisions		
Date:	Comments	Init.

Colorado Department of Transportation
DOT DEPARTMENT OF TRANSPORTATION
8833 South Wadsworth Court
Littleton, CO 80128
Phone: 303-972-9112 FAX: 303-972-9114
Region 6 RLB

As Constructed
No Revisions:
Revised:
Void:

SB SANTA FE TO EB C470 RAMP
CONSTRUCTION LAYOUT (4 OF 8)

Designer:	K. Saindon	Structure Numbers	F-16-YE
Detailer:	E. Schawo		
Sheet Subset:	Bridge	Subset Sheets: B17 of 72	

Project No./Code
ES6 0852-103
17679
Sheet Number 206

Horizontal Curve Data

PI Sta.	=	730+12.71
PC Sta.	=	716+48.72
PT Sta.	=	734+21.00
Δ	=	113° 27'26"
T	=	1363.99'
L	=	1772.28'
R	=	895.00'

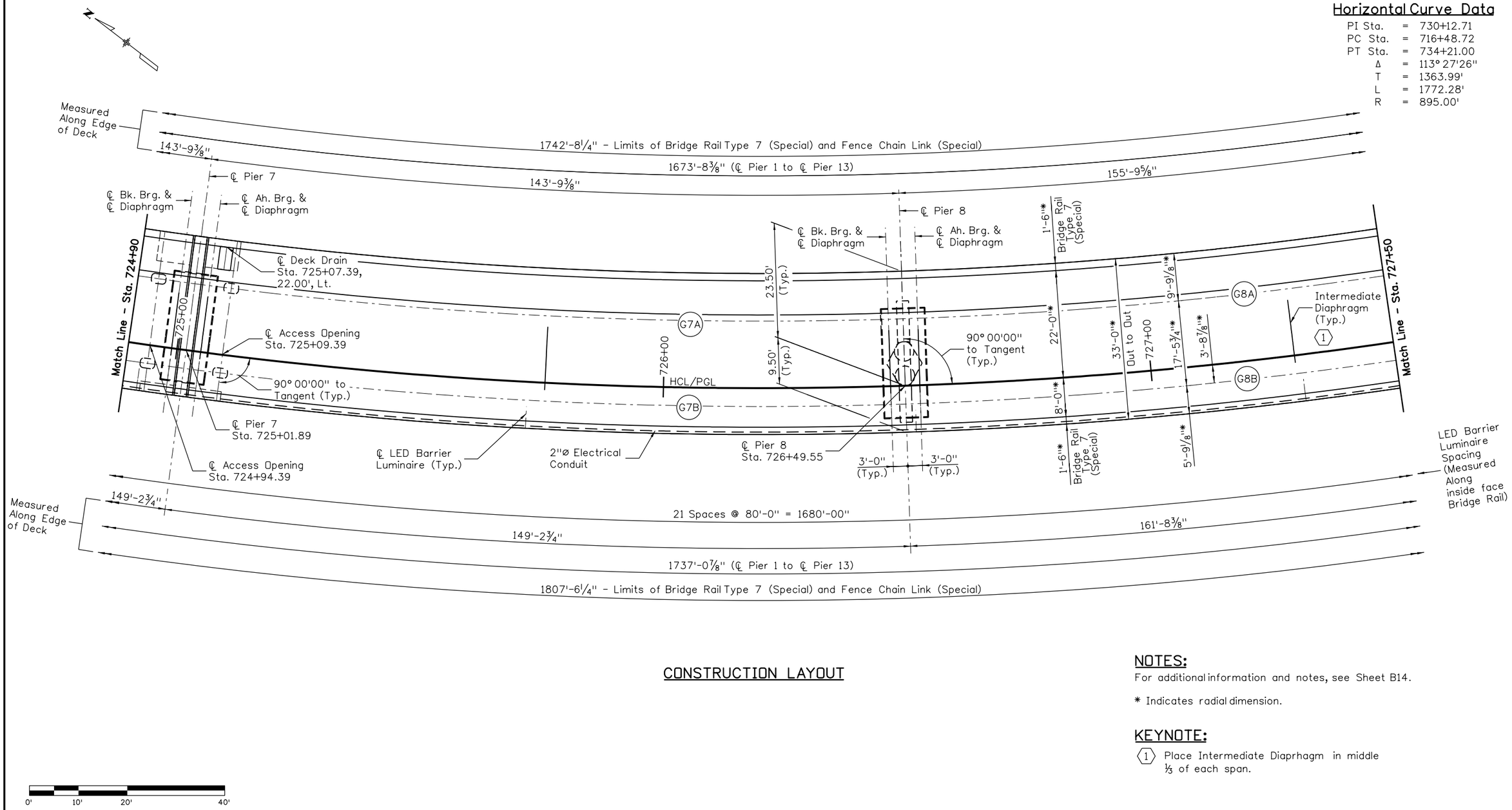

CONSTRUCTION LAYOUT

NOTES:

For additional information and notes, see Sheet B14.

* Indicates radial dimension.

KEYNOTE:

(1) Place Intermediate Diaprhagm in middle ⅓ of each span.

0' 10' 20' 40'

Quantities	INITIAL	DATE
Quantities By		
Checked By		

Detail	INITIAL	DATE
Detailed By	ERS	09/09
Checked By		

Design	INITIAL	DATE
Designed By	KCS	09/09
Checked By		

Revision Dates MM/YY (Preliminary Stage Only)

18026 1:51:41 PM S:\Tranpro\100002375\14679\Consultants\Bridge\Drawings\14679_pBD-P715.dgn

Print Date: 12/31/2009
File Name: 14679_pBD-P715.dgn
Horiz. Scale: 1:20 Vert. Scale: As Noted
Staff Bridge Branch - Unit 0224 Unit Leader: MH

PBSJ 4601 DTC Boulevard Suite 700 Denver, CO 80237

Sheet Revisions		
Date:	Comments	Init.

Colorado Department of Transportation
DOT DEPARTMENT OF TRANSPORTATION
8833 South Wadsworth Court
Littleton, CO 80128
Phone: 303-972-9112 FAX: 303-972-9114
Region 6 RLB

As Constructed
No Revisions:
Revised:
Void:

SB SANTA FE TO EB C470 RAMP
CONSTRUCTION LAYOUT (5 OF 8)

Designer:	K. Saindon	Structure Numbers	F-16-YE
Detailer:	E. Schawo		
Sheet Subset:	Bridge	Subset Sheets: B18 of 72	

Project No./Code
ES6 0852-103
17679
Sheet Number 207

Horizontal Curve Data

PI Sta.	=	730+12.71
PC Sta.	=	716+48.72
PT Sta.	=	734+21.00
Δ	=	113° 27'26"
T	=	1363.99'
L	=	1772.28'
R	=	895.00'

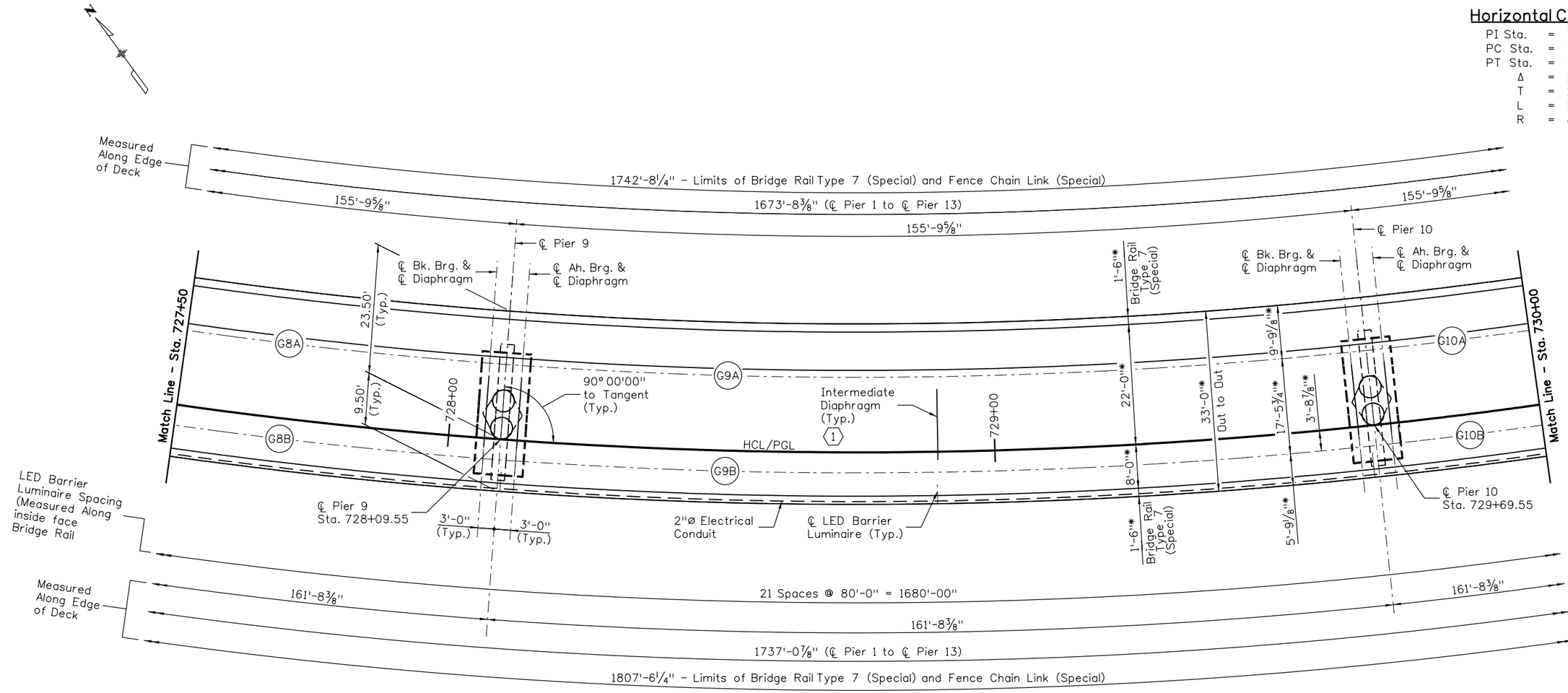

CONSTRUCTION LAYOUT

NOTES:

For additional information and notes, see Sheet B14.

* Indicates radial dimension.

KEYNOTE:

(1) Place Intermediate Diaprhagm in middle ⅓ of each span.

0' 10' 20' 40'

Design			
Designed By	KCS	09/09	
Checked By			

Detail			
Detailed By	ERS	09/09	
Checked By	KCS	11/09	

Quantities			
Quantities By			
Checked By			

Revision Dates (Preliminary Stage Only)

18026 1:51:45 PM S:\Tranproj\100002375\14679\Consultants\Bridge\Drawings\14679_pBD-P716.dgn

Print Date: 12/31/2009
File Name: 14679_pBD-P716.dgn
Horiz. Scale: 1:20 Vert. Scale: As Noted
Staff Bridge Branch - Unit 0224 Unit Leader: MH

PBSJ 4601 DTC Boulevard Suite 700 Denver, CO 80237

Sheet Revisions		
Date:	Comments	Init.

Colorado Department of Transportation
8833 South Wadsworth Court
Littleton, CO 80128
Phone: 303-972-9112 FAX: 303-972-9114
Region 6 RLB

As Constructed
No Revisions:
Revised:
Void:

SB SANTA FE TO EB C470 RAMP
CONSTRUCTION LAYOUT (6 OF 8)

Designer: K. Saindon
Detailer: E. Schawo
Structure Numbers F-16-YE
Sheet Subset: Bridge
Subset Sheets: B19 of 72

Project No./Code
ES6 0852-103
17679
Sheet Number 208

Horizontal Curve Data

PI Sta.	=	730+12.71
PC Sta.	=	716+48.72
PT Sta.	=	734+21.00
Δ	=	113° 27'26"
T	=	1363.99'
L	=	1772.28'
R	=	895.00'

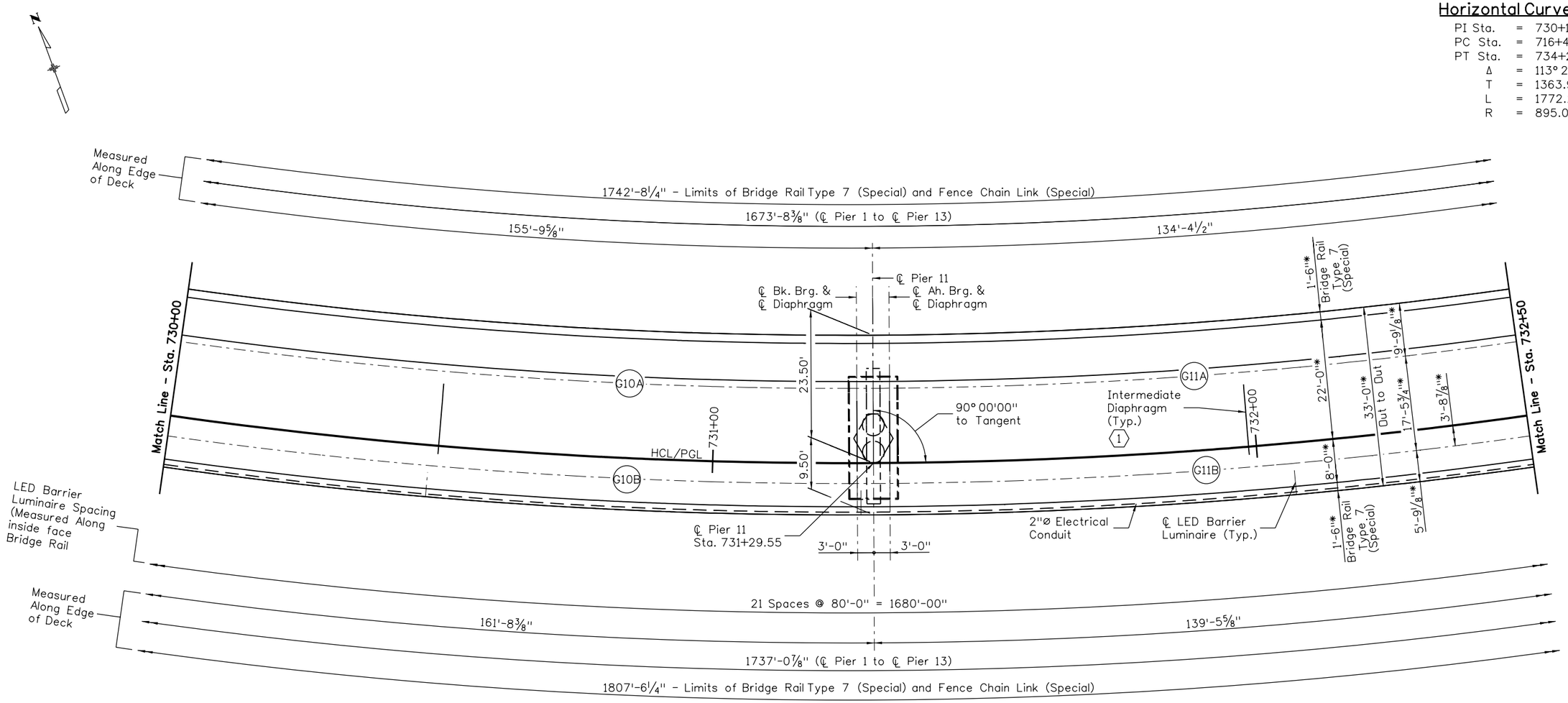

CONSTRUCTION LAYOUT

NOTES:

For additional information and notes, see Sheet B14.

* Indicates radial dimension.

KEYNOTE:

1 Place Intermediate Diaprhagm in middle ⅓ of each span.

0' 10' 20' 40'

Design			
Designed By	INITIAL KCS	DATE 09/09	
Checked By			

Detail			
Detailed By	INITIAL ERS	DATE 09/09	
Checked By	KCS	11/09	

Quantities			
Quantities By	INITIAL	DATE	
Checked By			

Revision Dates (Preliminary Stage Only)

18026 1:51:48 PM S:\Tranpro\\100002375\14679\Consultants\Bridge\Drawings\14679_pBD-P717.dgn

Print Date: 12/31/2009
File Name: 14679_pBD-P717.dgn
Horiz. Scale: 1:20 Vert. Scale: As Noted
Staff Bridge Branch - Unit 0224 Unit Leader: MH

PBSJ 4601 DTC Boulevard Suite 700 Denver, CO 80237

Sheet Revisions		
Date:	Comments	Init.

Colorado Department of Transportation
DOT DEPARTMENT OF TRANSPORTATION
8833 South Wadsworth Court
Littleton, CO 80128
Phone: 303-972-9112 FAX: 303-972-9114
Region 6 RLB

As Constructed
No Revisions:
Revised:
Void:

SB SANTA FE TO EB C470 RAMP
CONSTRUCTION LAYOUT (7 OF 8)

Designer:	K. Saindon	Structure Numbers	F-16-YE
Detailer:	E. Schawo		
Sheet Subset:	Bridge	Subset Sheets: B20 of 72	

Project No./Code
ES6 0852-103
17679
Sheet Number 209

Horizontal Curve Data

PI Sta.	=	730+12.71
PC Sta.	=	716+48.72
PT Sta.	=	734+21.00
Δ	=	113° 27'26"
T	=	1363.99'
L	=	1772.28'
R	=	895.00'

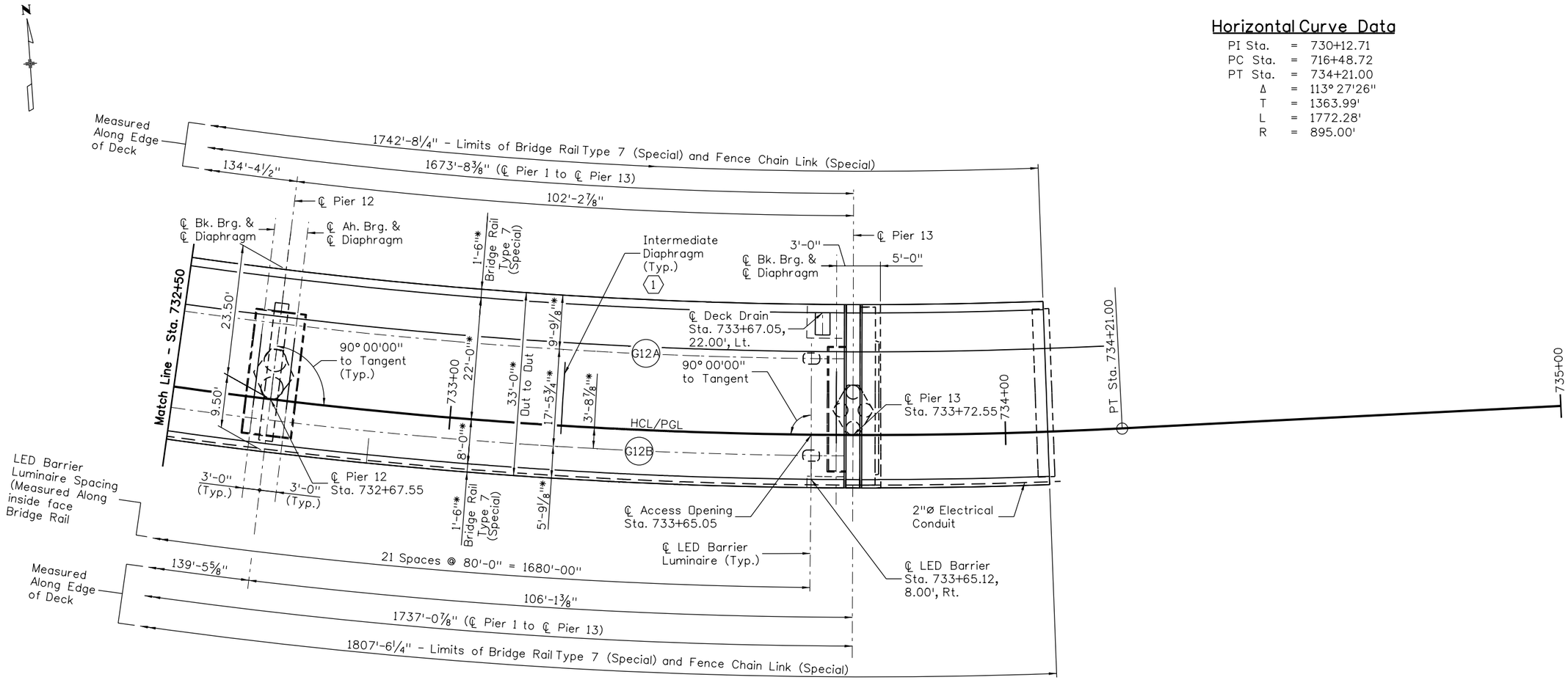

CONSTRUCTION LAYOUT

NOTES:

For additional information and notes, see Sheet B14.

* Indicates radial dimension.

KEYNOTE:

1 Place Intermediate Diaprhagm in middle ⅓ of each span.

0' 10' 20' 40'

Design	INITIAL	DATE
Designed By	KCS	09/09
Checked By		

Detail	INITIAL	DATE
Detailed By	ERS	09/09
Checked By	KCS	11/09

Quantities	INITIAL	DATE
Quantities By		
Checked By		

Revision Dates (Preliminary Stage Only)

18026 1:51:52 PM S:\Tranproj\100002375\14679\Consultants\Bridge\Drawings\14679_pBD-P718.dgn

Print Date: 12/31/2009
File Name: 14679_pBD-P718.dgn
Horiz. Scale: 1:20 Vert. Scale: As Noted
Staff Bridge Branch - Unit 0224 Unit Leader: MH

PBSJ 4601 DTC Boulevard Suite 700 Denver, CO 80237

Sheet Revisions		
Date:	Comments	Init.

Colorado Department of Transportation
8833 South Wadsworth Court
Littleton, CO 80128
Phone: 303-972-9112 FAX: 303-972-9114
Region 6 RLB

As Constructed
No Revisions:
Revised:
Void:

SB SANTA FE TO EB C470 RAMP
CONSTRUCTION LAYOUT (8 OF 8)

Designer:	K. Saindon	Structure Numbers	F-16-YE
Detailer:	E. Schawo		
Sheet Subset:	Bridge	Subset Sheets: B21 of 72	

Project No./Code
ES6 0852-103
17679
Sheet Number 210

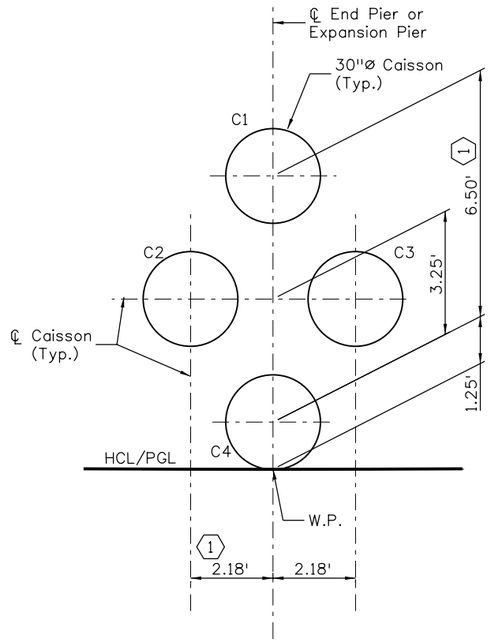

PLAN - PIERS 1, 7, & 13

(AT END AND EXPANSION PIERS)

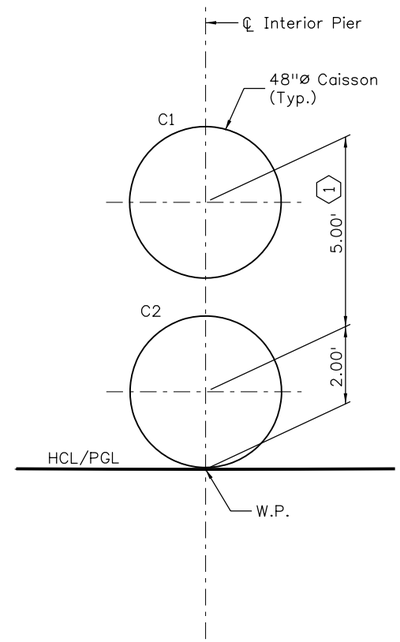

PLAN - PIERS 2 THRU 6 & 8 THRU 12

(AT INTERIOR PIERS)

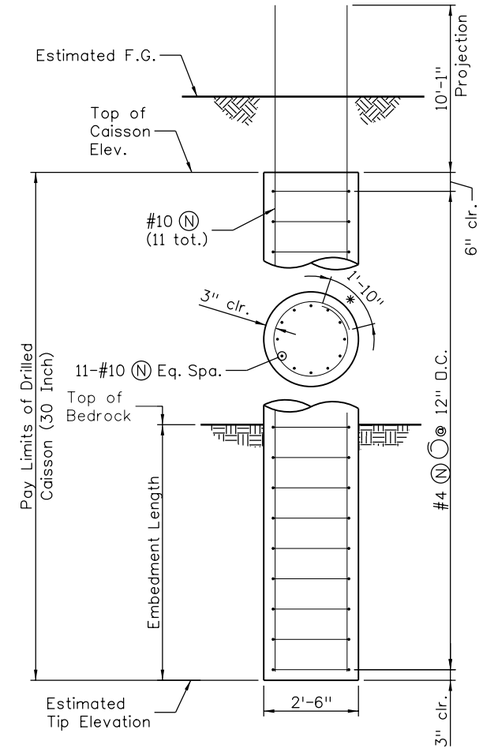

30"ø CAISSON

* = Stagger Laps

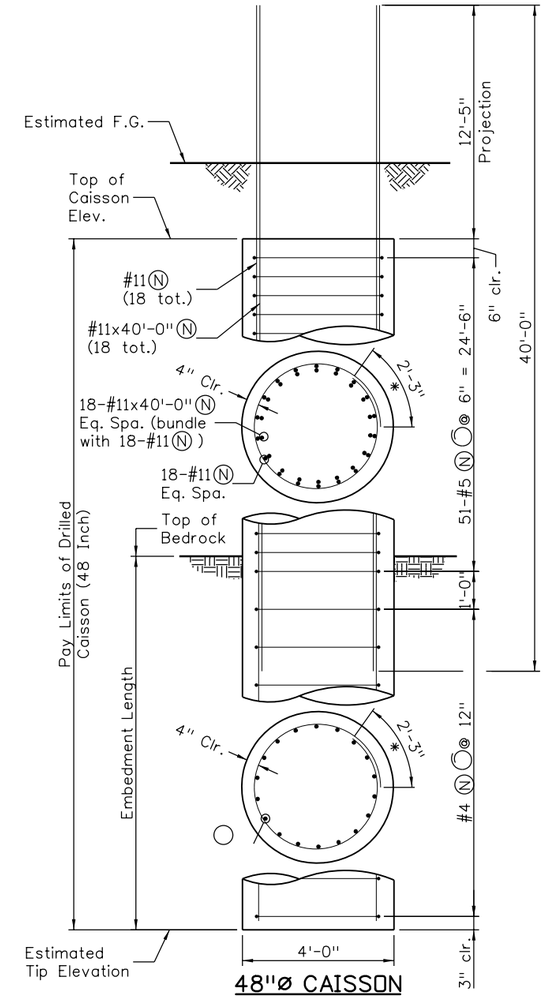

48"ø CAISSON

* = Stagger Laps

FOR BURIED UTILITY INFORMATION
THREE (3) BUSINESS DAYS
BEFORE YOU DIG
CALL 811
(or 1-800-922-1987)
UTILITY NOTIFICATION
CENTER OF COLORADO (UNCC)
www.uncc.org

CAISSON SUMMARY TABLE

LOCATION	CAISSON NUMBER	CAISSON SIZE	TOP OF CAISSON ELEV.	ESTIMATED BEDROCK ELEV.	MINIMUM EMBEDMENT INTO BEDROCK (FT.)	ESTIMATED TIP ELEV.	FACTORED MAXIMUM LOAD (KIPS)	UNFACTORED MAXIMUM LOAD (KIPS)
PIER 1	C1-C4	30"ø	5401.00	5358.00	20.00	5338.00	603	510
PIER 2	C1-C2	48"ø	5391.00	5344.00	33.00	5311.00	1803	1292
PIER 3	C1-C2	48"ø	5391.00	5353.00	37.00	5316.00	1943	1421
PIER 4	C1-C2	48"ø	5392.00	5370.00	44.00	5326.00	2254	1760
PIER 5	C1-C2	48"ø	5404.00	5369.00	55.00	5314.00	2742	2104
PIER 6	C1-C2	48"ø	5403.00	5359.00	53.00	5306.00	2633	1973
PIER 7	C1-C4	30"ø	5405.00	5373.00	39.00	5334.00	1209	907
PIER 8	C1-C2	48"ø	5398.00	5374.00	55.00	5319.00	2727	2007
PIER 9	C1-C2	48"ø	5401.00	5381.00	58.00	5323.00	2868	2096
PIER 10	C1-C2	48"ø	5407.00	5394.00	55.00	5339.00	2738	2028
PIER 11	C1-C2	48"ø	5416.00	5401.00	41.00	5360.00	2137	1650
PIER 12	C1-C2	48"ø	5430.00	5418.00	26.00	5392.00	1495	1119
PIER 13	C1-C4	30"ø	5440.00	5426.00	20.00	5406.00	508	360

KEYNOTES:

(1) Cage placement within shafts must be as shown to nest within column cage. Slight oversizing of the shaft is permissible within 2 shaft diameters of top to facilitate this.

NOTES:

1. Drilled caisson concrete shall be concrete class BZ.
2. For location of caissons, see Sheet B14 thru B21.
3. Temporary steel casings and dewatering may be required. Casing and dewatering shall be included in Item 503. Temporary casing, if used, shall be removed upon completion of shaft.
4. Lap splices shall be securely tied or clamped. Engineer approved mechanical couplers, or butt welds conforming to AWS, may be substituted for lap splices. Contractor shall be responsible for assembling and supporting the reinforcing cage to safely resist all loads imposed during handling and concrete placement. Cost of splices is included in item 503.
5. Bars projecting from top of caisson shall be placed to fit inside the reinforcing cage of the Pier Column. Projecting bars shall be included in the cost of item 503, Drilled Caisson.
6. Each shaft at a pier shall be drilled, reinforced, concreted, and allowed to cure for 24 hours before drilling begins on an adjacent shaft.

Design	INITIAL	DATE	Detail	INITIAL	DATE	Quantities	INITIAL	DATE
Designed By	KCS	09/09	Detailed By	ERS	09/09	Quantities By		
Checked By			Checked By	KCS	11/09	Checked By		

Revision Dates MM/YY (Preliminary Stage Only)

18026 1:51:56 PM S:\Tranproj\100002375\14679\Consultants\Bridge\Drawings\14679_pBD-P719.dgn

Print Date: 12/31/2009
File Name: 14679_pBD-P719.dgn
Horiz. Scale: 1:4 Vert. Scale: As Noted
Staff Bridge Branch - Unit 0224 Unit Leader: MH

PBSJ 4601 DTC Boulevard Suite 700 Denver, CO 80237

Sheet Revisions		
Date:	Comments	Init.

Colorado Department of Transportation
DOT DEPARTMENT OF TRANSPORTATION
8833 South Wadsworth Court
Littleton, CO 80128
Phone: 303-972-9112 FAX: 303-972-9114
Region 6 RLB

As Constructed
No Revisions:
Revised:
Void:

SB SANTA FE TO EB C470 RAMP FOUNDATION LAYOUT & CAISSON DETAILS

Designer: K. Saindon
Detailer: E. Schawo
Sheet Subset: Bridge
Structure Numbers F-16-YE
Subset Sheets: B22 of 72

Project No./Code
ES6 0852-103
17679
Sheet Number 211

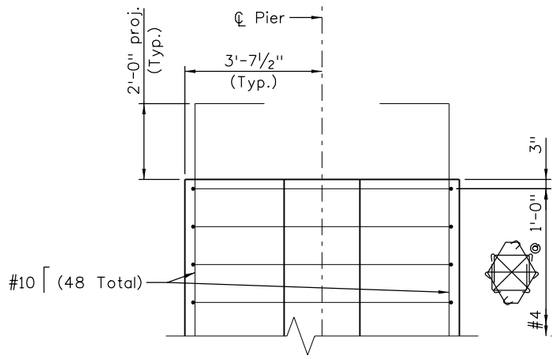

PIER COLUMN TOP ELEVATION
(Typical Elevation)

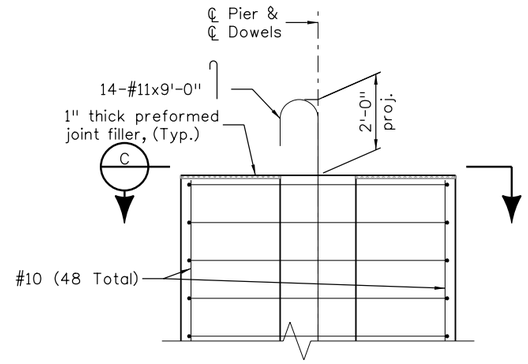

PIER COLUMN TOP ELEVATION
(At Piers 2, 3, 11 & 12)
(For information not shown, see "Pier Column Top Elevation - Typical Elevation")

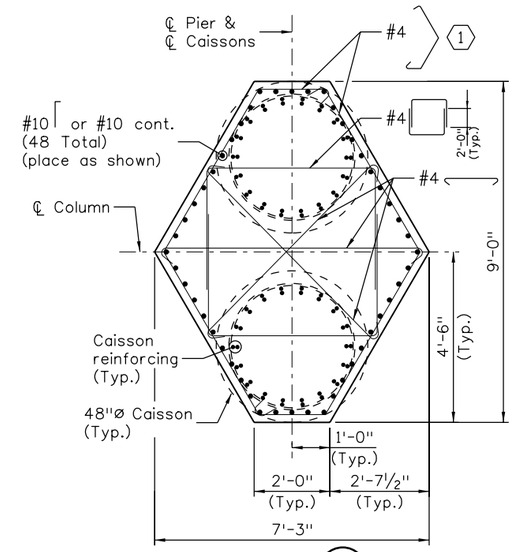

SECTION A

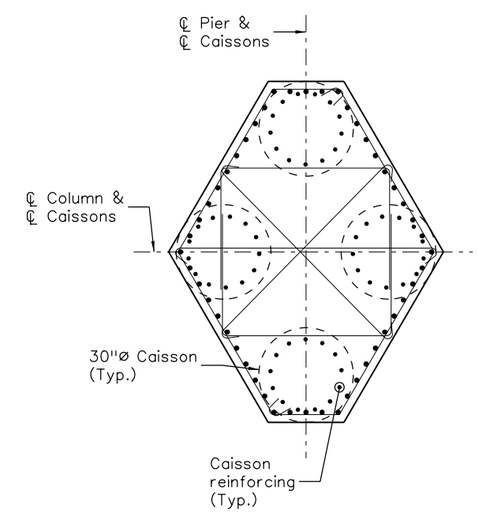

SECTION B
(For information not shown, See "Section A")

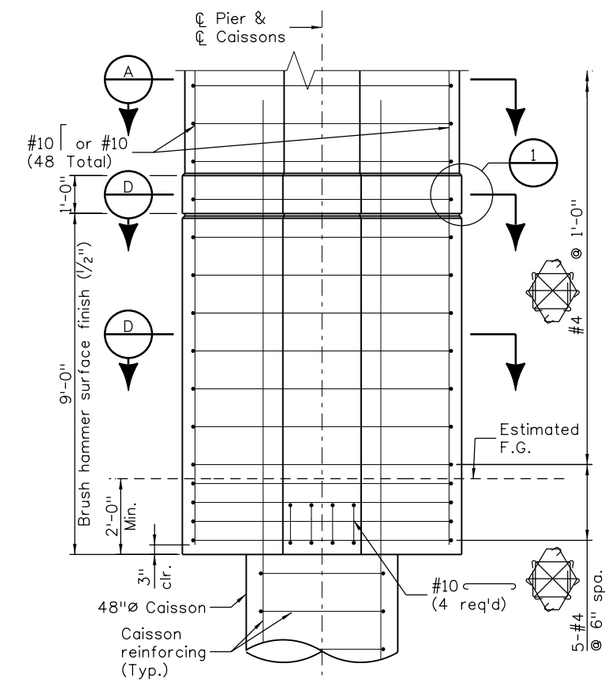

PIER COLUMN BOTTOM ELEVATION
(Typical Elevation)

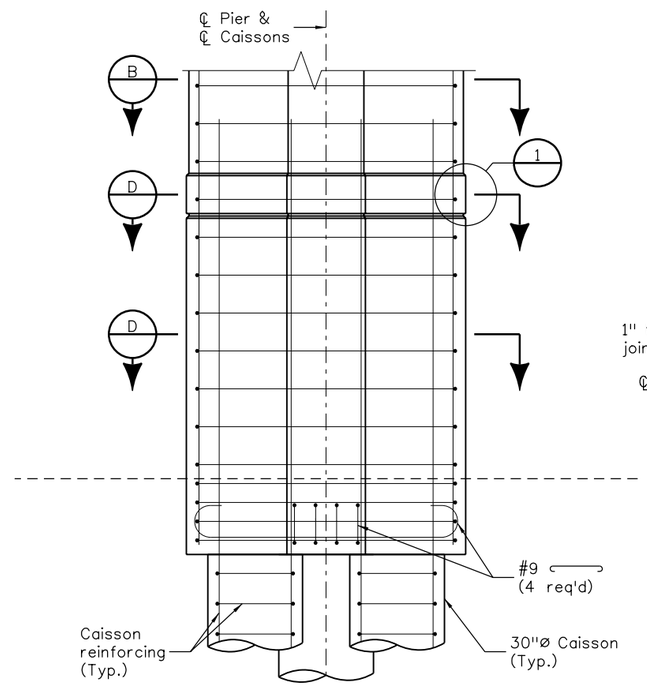

PIER COLUMN BOTTOM ELEVATION
(At Piers 1, 7, & 13)
(For information not shown, see "Pier Column Bottom Elevation - Typical Elevation")

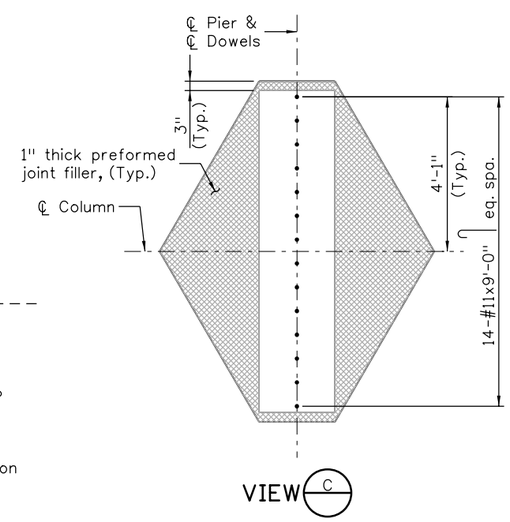

VIEW C

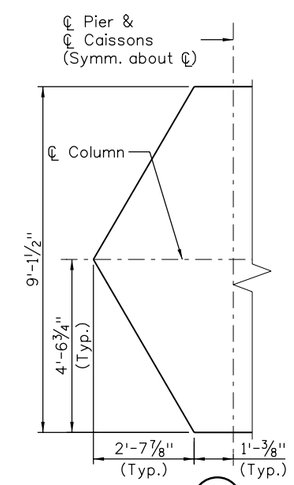

SECTION D
(See "Section A" and "Section B" for Column reinforcing)

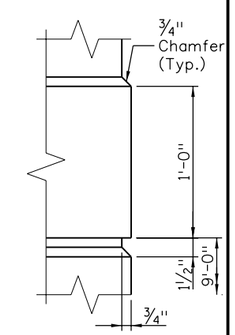

DETAIL 1

KEYNOTES:

(1) Alternate hooks.

NOTES:

For caisson details, see sheet B22.

For Pier cap details, see sheets B24 thru B30.

Print Date: 12/31/2009	Sheet Revisions	Colorado Department of Transportation	As Constructed
File Name: 14679_pBD-D701.dgn	Date: / Comments / Init.	8833 South Wadsworth Court, Littleton, CO 80128	No Revisions:
Horiz. Scale: 1:4 Vert. Scale: As Noted		Phone: 303-972-9112 FAX: 303-972-9114	Revised:
Staff Bridge Branch - Unit 0224 Unit Leader: MH		Region 6 RLB	Void:
PBSJ 4601 DTC Boulevard, Suite 700, Denver, CO 80237			

SB SANTA FE TO EB C470 RAMP PIER COLUMNS			Project No./Code
Designer: K. Saindon	Structure Numbers	F-16-YE	ES6 0852-103
Detailer: E. Schawo			17679
Sheet Subset: Bridge	Subset Sheets: B23 of 72		Sheet Number 212

Revision Dates (Preliminary Stage Only)	
MM/YY	

Quantities			
	INITIAL	DATE	
Quantities By			
Checked By			

Detail			
	INITIAL	DATE	
Detailed By	ERS	09/09	
Checked By	KCS	11/09	

Design			
	INITIAL	DATE	
Designed By	KCS	09/09	
Checked By			

18026 1:51:59 PM S:\Tranproj\100002375\14679\Consultants\Bridge\Drawings\14679_pBD-D701.dgn

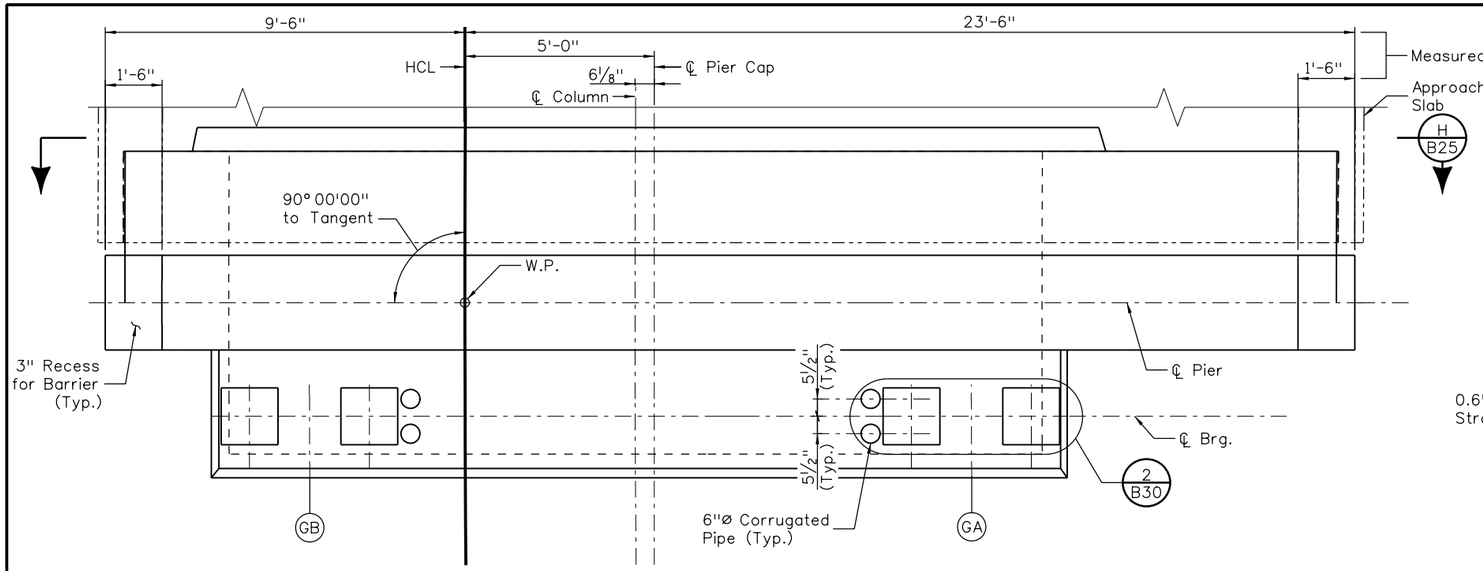

PLAN
(Dimensions are Horizontal)

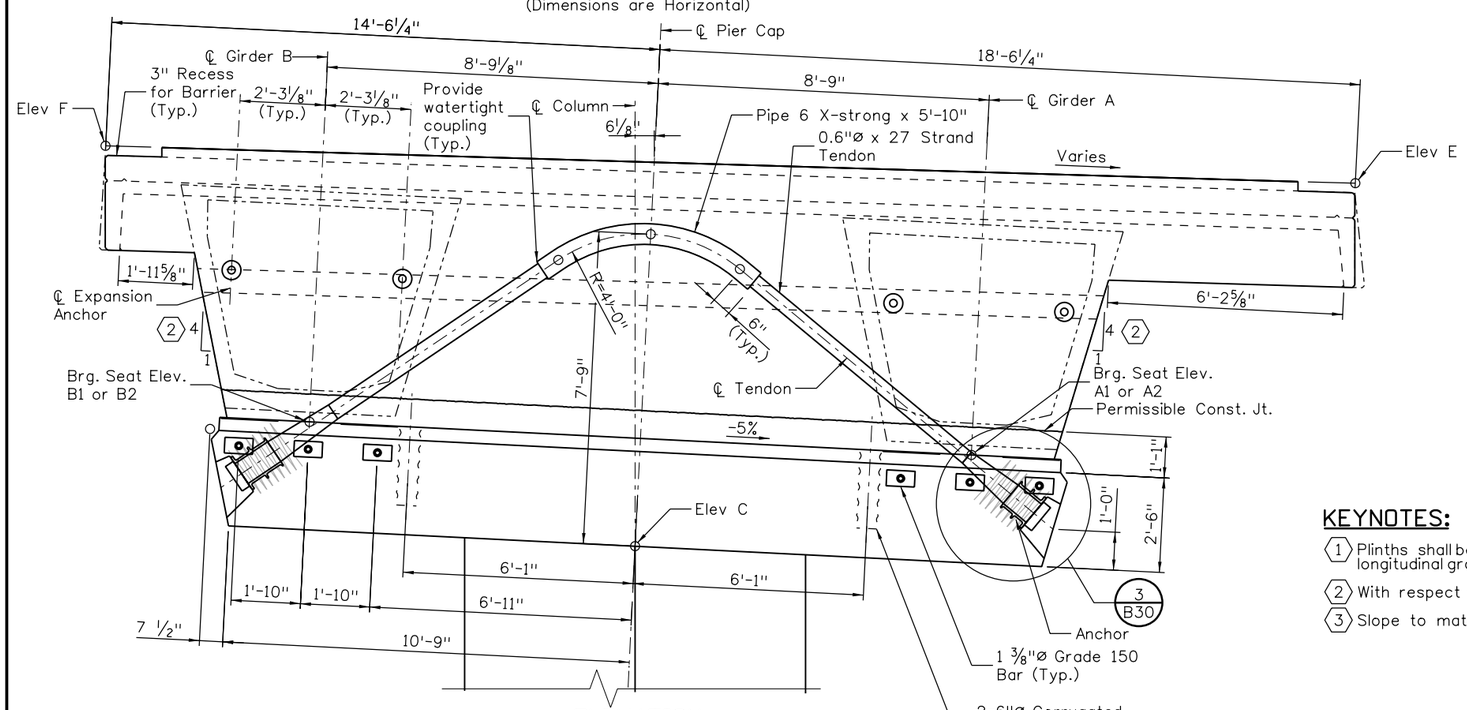

ELEVATION
(Looking Back Station)
(Pier 1 Shown, Pier 13 Similar Except Opposite Hand)

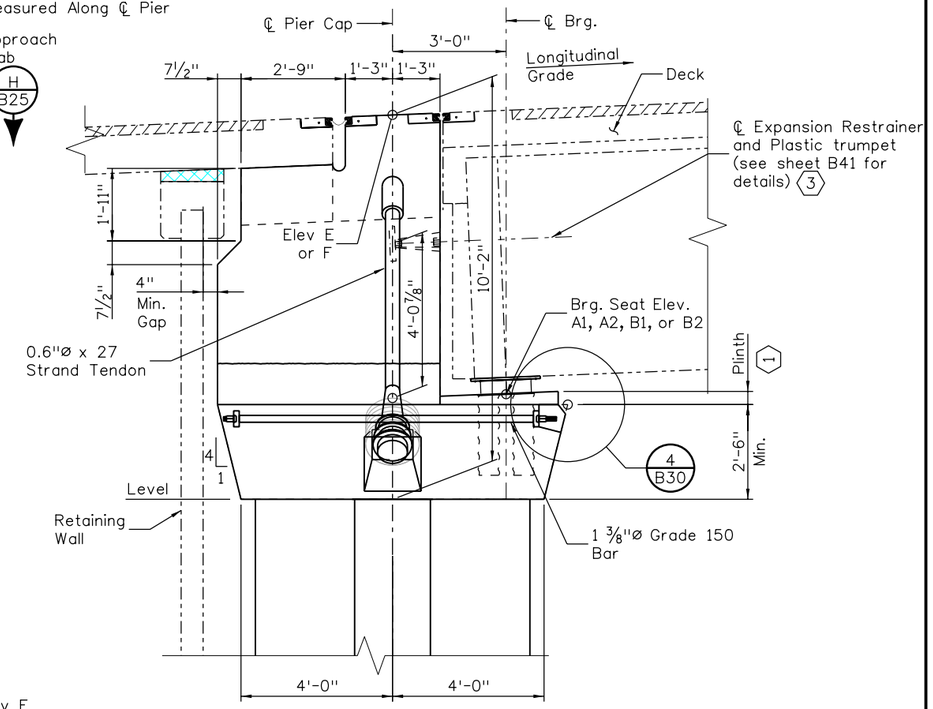

TYPICAL SECTION
(At Girders)

NOTES:

1. High-performance reinforcing steel required for this pier cap.
2. Tendons shall be simultaneously double-end stressed to 80% GUTS (lock-off force = 864K) each.
3. Bars shall be stressed to 70% GUTS (lock-off force = 166K each).
4. Epoxy bonder, per Standard Specification 601.12(n) shall be used for all post-tensioning anchorage blockout pourbacks.
5. Pipe 6 X-strong is incidental to post-tensioning.
6. For Pier column details, see sheet B23.
7. For Bearing details, see sheet B49.
8. For Girder details, see sheets B31 thru B37.
9. For Torsional Erections Brace details, see sheet B38.
10. For Deck Drain details, see sheets B57 thru B59.

KEYNOTES:

1. Plinths shall be set to accomodate longitudinal grade.
2. With respect to transverse slope.
3. Slope to match longitudinal grade.

DIMENSION AND ELEVATION TABLE

	P1	P13
Plinth (Ft)	0.35	0.05
Elev C	5419.26	5445.80
Elev A1	-	5447.92
Elev A2	5421.62	-
Elev B1	-	5448.77
Elev B2	5422.49	-
Elev E	5428.90	5455.07
Elev F	5429.97	5456.69

Design			
Designed By	KCS	09/09	
Checked By			

Detail			
Detailed By	ERS	09/09	
Checked By	KCS	11/09	

Quantities			
Quantities By			
Checked By			

Revision Dates	
MM/YY	(Preliminary Stage On)**

18026 1:52:07 PM S:\Transproj\100002375\14679\Consultants\Bridge\Drawings\14679_pBD-D702.dgn

Print Date: 12/31/2009
File Name: 14679_pBD-D702.dgn
Horiz. Scale: 1:4 Vert. Scale: As Noted
Staff Bridge Branch - Unit 0224 Unit Leader: MH

PBSJ 4601 DTC Boulevard Suite 700 Denver, CO 80237

Sheet Revisions		
Date:	Comments	Init.

Colorado Department of Transportation
DOT DEPARTMENT OF TRANSPORTATION
8833 South Wadsworth Court
Littleton, CO 80128
Phone: 303-972-9112 FAX: 303-972-9114
Region 6 RLB

As Constructed
No Revisions:
Revised:
Void:

SB SANTA FE TO EB C470 RAMP END PIER CAP POST-TENSIONING AND DIMENSIONS

Designer: K. Saindon
Detailer: E. Schawo
Sheet Subset: Bridge
Structure Numbers F-16-YE
Subset Sheets: B24 of 72

Project No./Code
ES6 0852-103
17679
Sheet Number 213

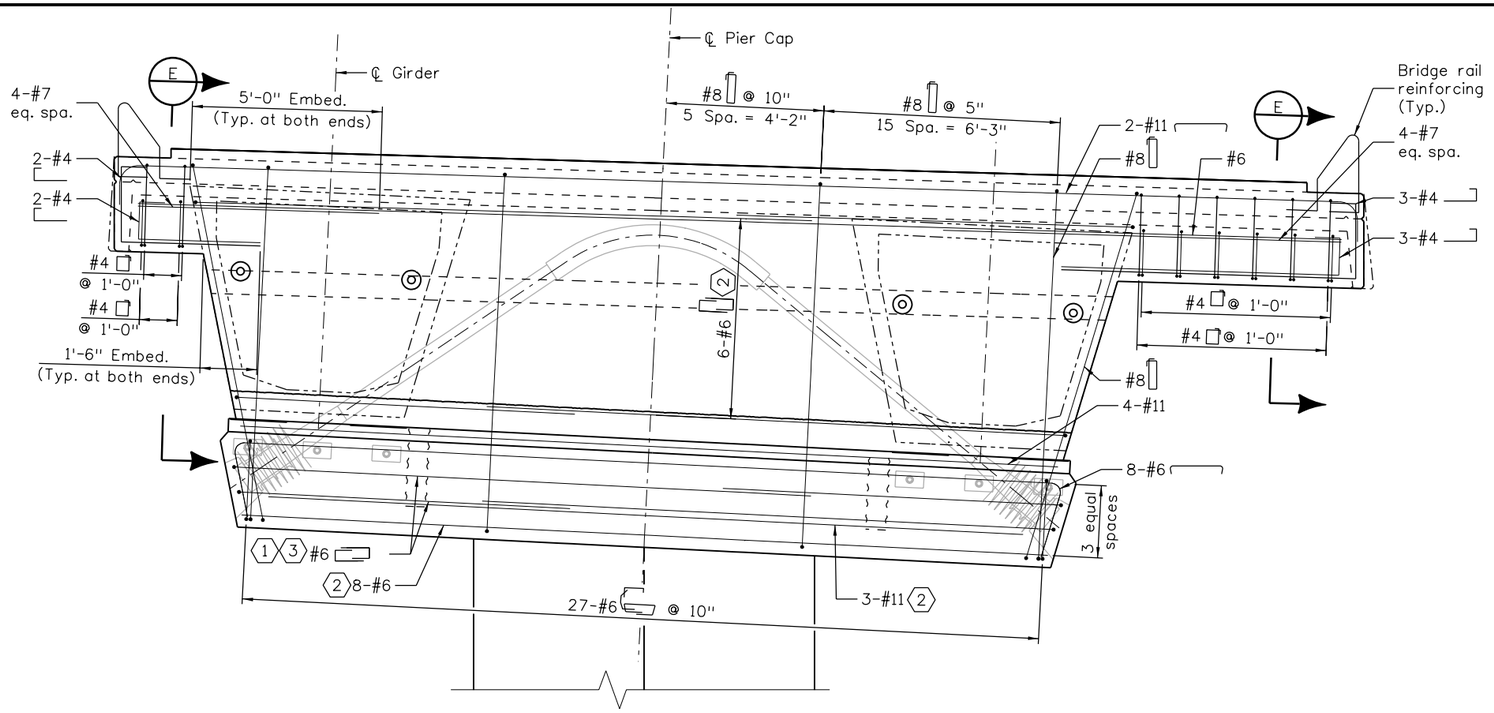

ELEVATION

(Looking back station)
(Pier 1 shown, Pier 13 similar except opposite hand))

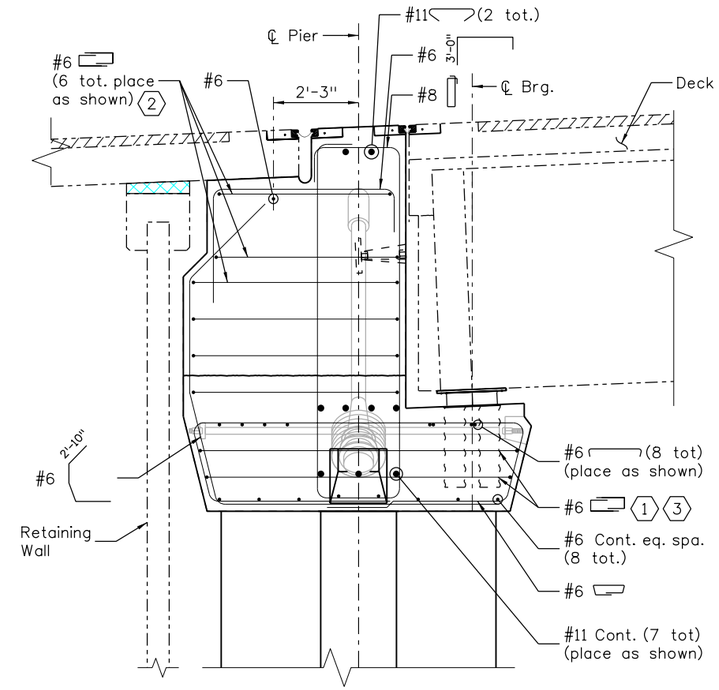

TYPICAL SECTION

(At Girders)
(Pier drop beam reinforcing not shown for clarity)

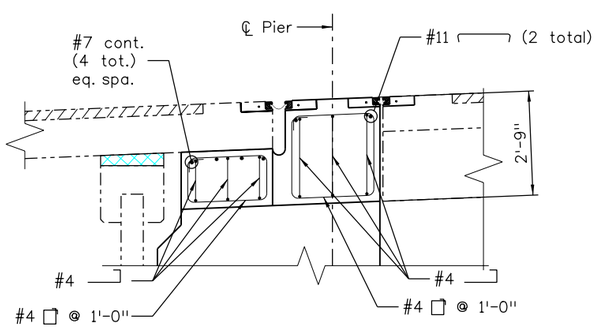

SECTION E

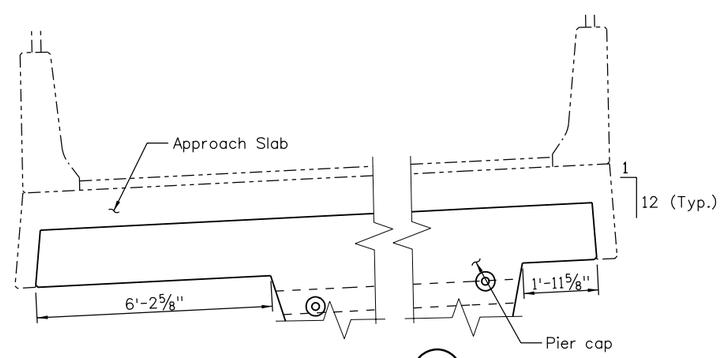

VIEW H B24

KEYNOTES:

1. Stagger Splices.
2. Cut bars as needed to clear PT blockout.
3. See sheet B30 for treatment of bars at PT blockout.

NOTES:

For additional End Pier details and notes, see sheet B24.

Revision Dates	
MM/YY	(Preliminary Stage Only)

Quantities			
	INITIAL	DATE	
Quantities By			
Checked By			

Detail			
	INITIAL	DATE	
Detailed By	ERS	09/09	
Checked By	KCS	11/09	

Design			
	INITIAL	DATE	
Designed By	KCS	09/09	
Checked By			

18026 1:52:09 PM S:\Tranpro\100002375\14679\Consultants\Bridge\Drawings\14679_pBD-D703.dgn

Print Date: 12/31/2009
File Name: 14679_pBD-D703.dgn
Horiz. Scale: 1:4 Vert. Scale: As Noted
Staff Bridge Branch - Unit 0224 Unit Leader: MH

PBSJ 4601 DTC Boulevard Suite 700 Denver, CO 80237

Sheet Revisions		
Date:	Comments	Init.

Colorado Department of Transportation
DOT DEPARTMENT OF TRANSPORTATION
8833 South Wadsworth Court
Littleton, CO 80128
Phone: 303-972-9112 FAX: 303-972-9114
Region 6 RLB

As Constructed
No Revisions:
Revised:
Void:

SB SANTA FE TO EB C470 RAMP
END PIER CAP REINFORCING DETAILS

Designer:	K. Saindon	Structure Numbers	F-16-YE
Detailer:	E. Schawo		
Sheet Subset:	Bridge	Subset Sheets:	B25 of 72

Project No./Code
ES6 0852-103
17679
Sheet Number 214

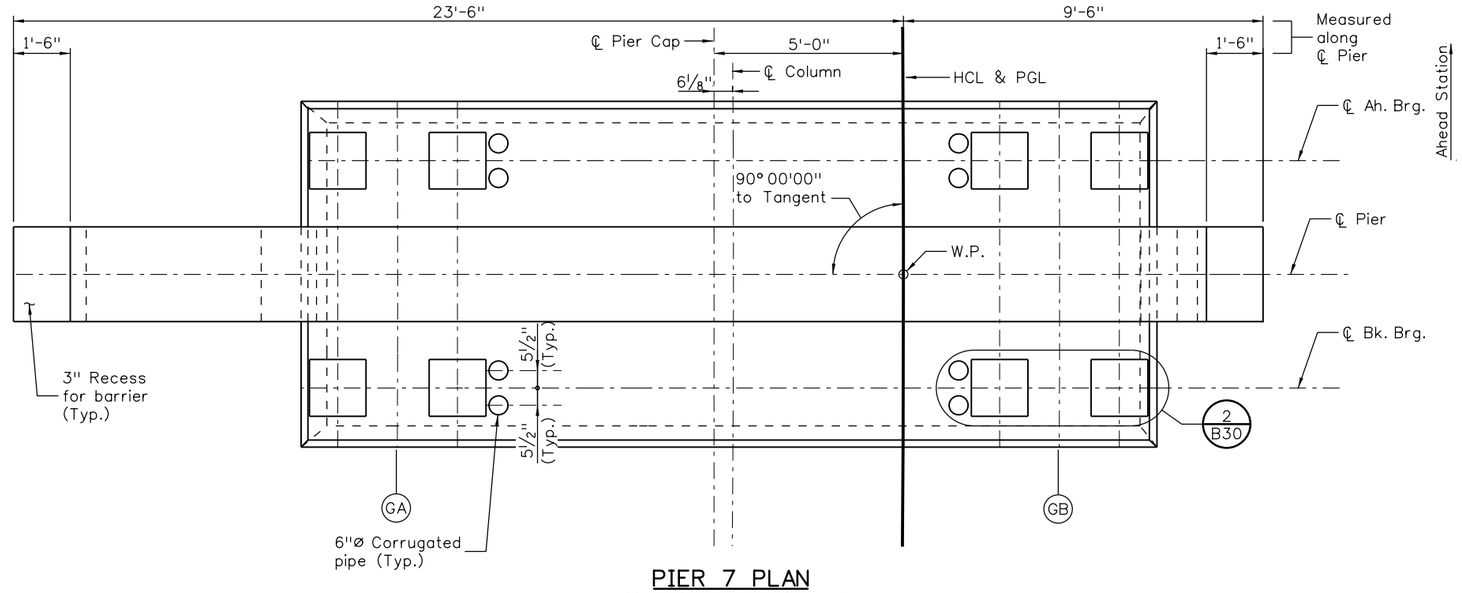

PIER 7 PLAN

(Dimensions are Horizontal)

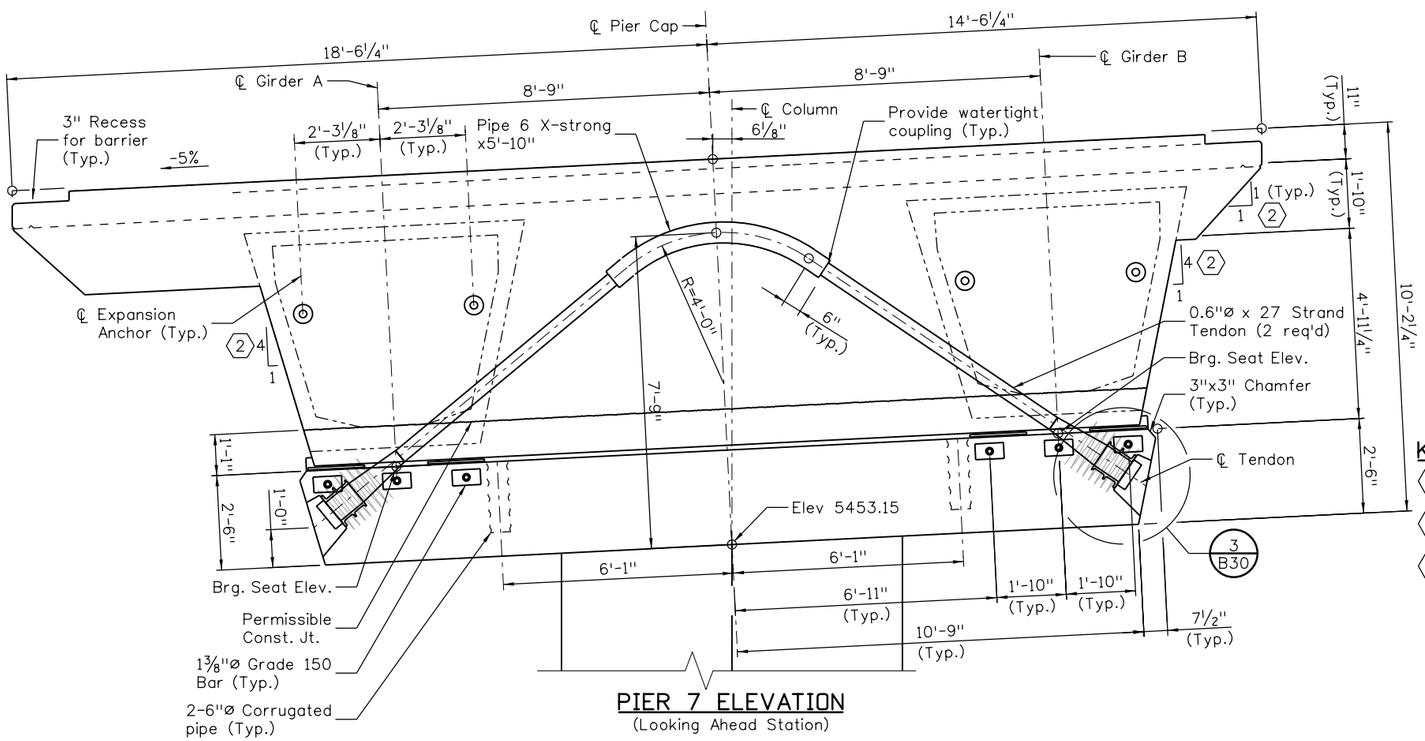

PIER 7 ELEVATION

(Looking Ahead Station)

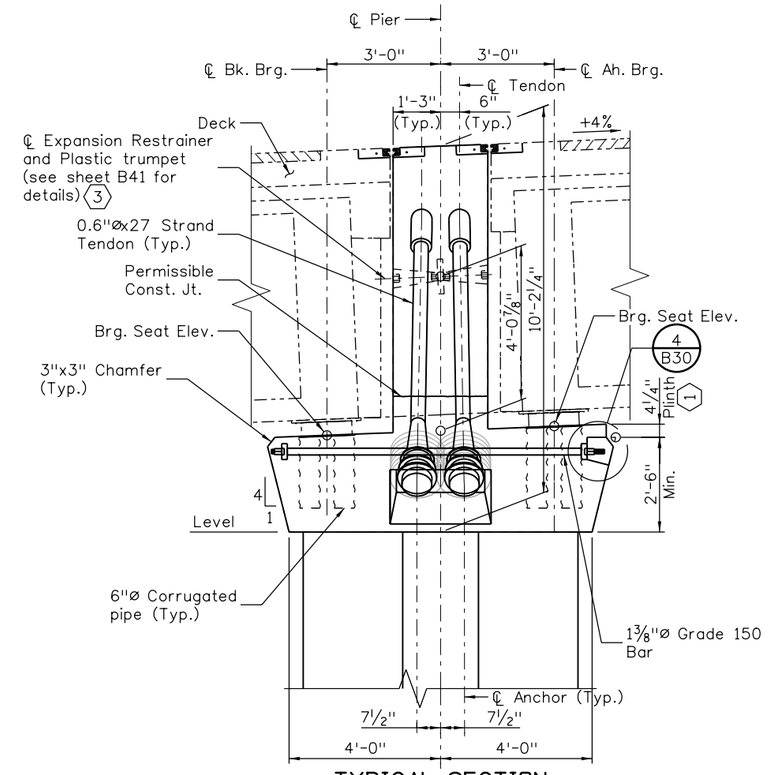

TYPICAL SECTION

(At Girders)

ELEVATIONS TABLE

	Girder A	Girder B
Bk. Brg.	5455.27	5456.14
Ah. Brg.	5455.51	5456.38

KEYNOTES:

1. Plinths shall be set to accomodate longitudinal grade.
2. With respect to the transverse slope.
3. Slope to match longitudinal grade.

NOTES:

1. High-performance reinforcing steel required for this pier cap.
2. Tendons shall be simultaneously double-end stressed to 80% GUTS (lock-off force = 864K) each.
3. Bars shall be stressed to 70% GUTS (lock-off force = 166K each).
4. Epoxy bonder, per Standard Specification 601.12(n) shall be used for all post-tensioning anchorage blockout pourbacks.
5. Pipe 6 X-strong is incidental to post-tensioning.
6. For Pier column details, see sheet B23.
7. For Bearing details, see sheet B49.
8. For Girder details, see sheets B31 thru B37.
9. For Torsional Erection Brace details, see sheet B38.
10. For Deck Drain details, see sheets B57 thru B59.

Revision Dates	MM/YY
(Preliminary Stage On)**	

Quantities	INITIAL	DATE
Quantities By		
Checked By		

Detail	INITIAL	DATE
Detailed By	ERS	09/09
Checked By	KCS	11/09

Design	INITIAL	DATE
Designed By	KCS	09/09
Checked By		

18026 1:52:17 PM S:\Tranproj\100002375\14679\Consultants\Bridge\Drawings\14679_pBD-D704.dgn

Print Date: 12/31/2009
File Name: 14679_pBD-D704.dgn
Horiz. Scale: 1:4 Vert. Scale: As Noted
Staff Bridge Branch - Unit 0224 Unit Leader: MH

PBSJ 4601 DTC Boulevard Suite 700 Denver, CO 80237

Sheet Revisions		
Date:	Comments	Init.

Colorado Department of Transportation
DOT DEPARTMENT OF TRANSPORTATION
8833 South Wadsworth Court
Littleton, CO 80128
Phone: 303-972-9112 FAX: 303-972-9114
Region 6 RLB

As Constructed
No Revisions:
Revised:
Void:

SB SANTA FE TO EB C470 RAMP EXPANSION PIER CAP POST-TENSIONING AND DIMENSIONS

Designer: K. Saindon
Detailer: E. Schawo
Sheet Subset: Bridge
Structure Numbers: F-16-YE
Subset Sheets: B26 of 72

Project No./Code
ES6 0852-103
17679
Sheet Number 215

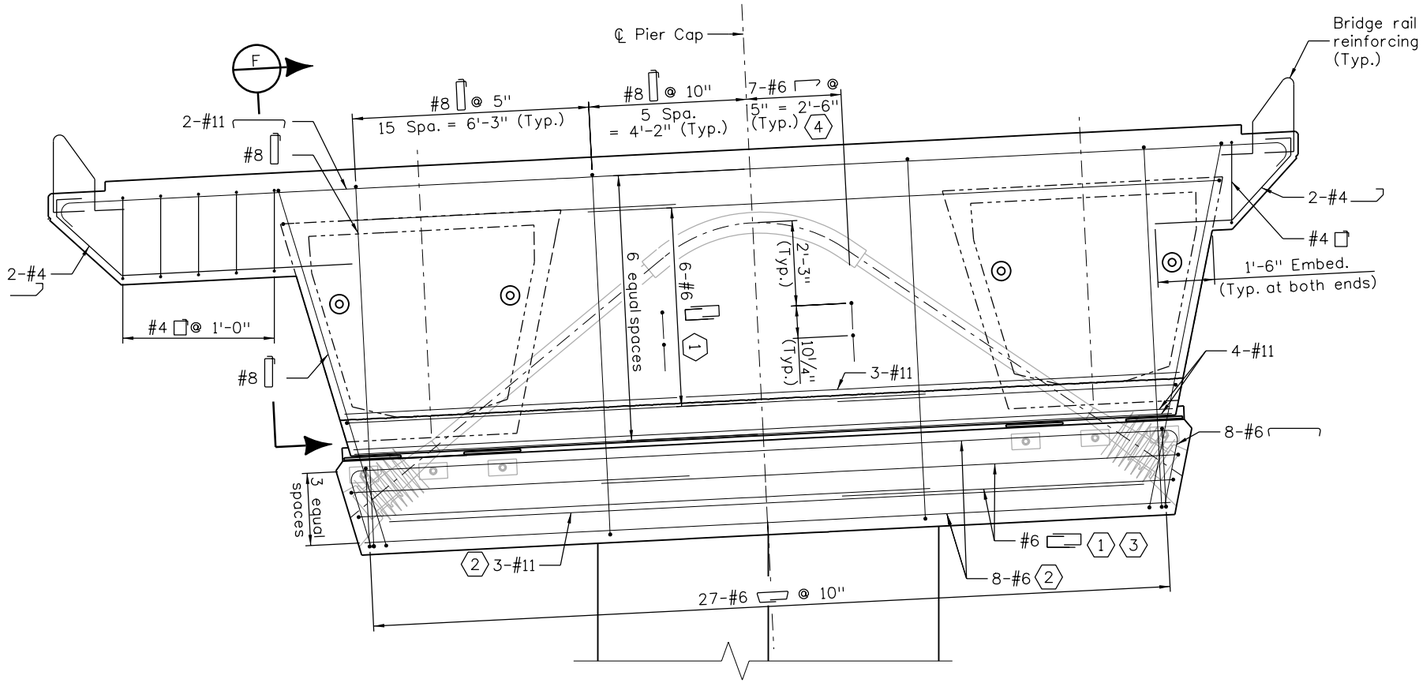

PIER 7 ELEVATION
(Looking Ahead Station)

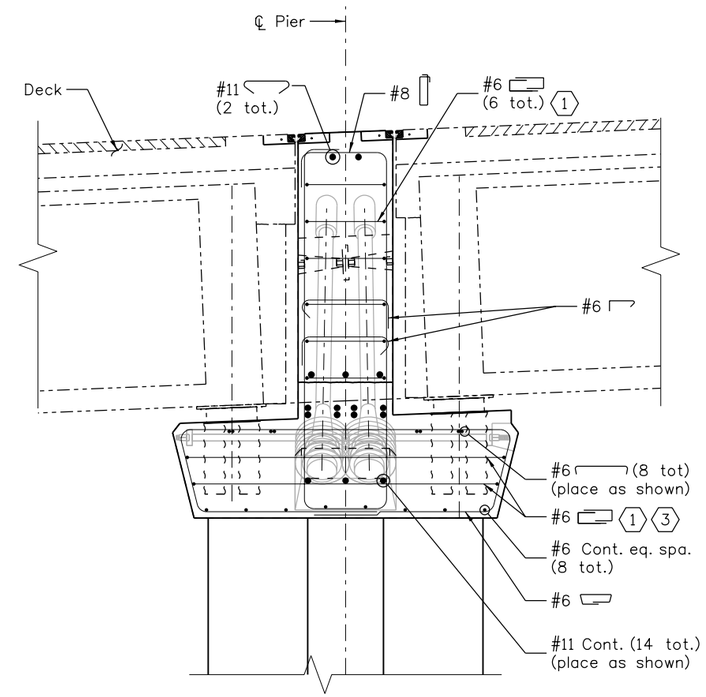

TYPICAL SECTION
(At Girders)

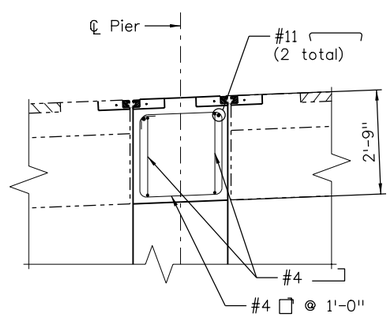

SECTION F

KEYNOTES:

1. Stagger Splices.
2. Cut bars as needed to clear PT blockout.
3. See sheet B30 for treatment of bars at PT blockout.
4. Alternate hooks.

NOTES:

For additional Expansion Pier details and notes, see sheet B26.

Revision Dates (Preliminary Stage Only)
MM/YY

Quantities					
				INITIAL	DATE
			Quantities By		
			Checked By		

Detail					
	INITIAL	DATE			
Detailed By	ERS	09/09			
Checked By	CKS	11/09			

Design		
	INITIAL	DATE
Designed By	CKS	09/09
Checked By		

18026 1:52:20 PM S:\Tranproj\100002375\14679\Consultants\Bridge\Drawings\14679_pBD-D705.dgn

Print Date: 12/31/2009
File Name: 14679_pBD-D705.dgn
Horiz. Scale: 1:4 Vert. Scale: As Noted
Staff Bridge Branch - Unit 0224 Unit Leader: MH

PBSJ 4601 DTC Boulevard Suite 700 Denver, CO 80237

Sheet Revisions		
Date:	Comments	Init.

Colorado Department of Transportation
DOT DEPARTMENT OF TRANSPORTATION
8833 South Wadsworth Court
Littleton, CO 80128
Phone: 303-972-9112 FAX: 303-972-9114
Region 6 RLB

As Constructed
No Revisions:
Revised:
Void:

SB SANTA FE TO EB C470 RAMP EXPANSION PIER CAP REINFORCING DETAILS

Designer:	K. Saindon	Structure Numbers	F-16-YE
Detailer:	E. Schawo		
Sheet Subset:	Bridge	Subset Sheets: B27 of 72	

Project No./Code
ES6 0852-103
17679
Sheet Number 216

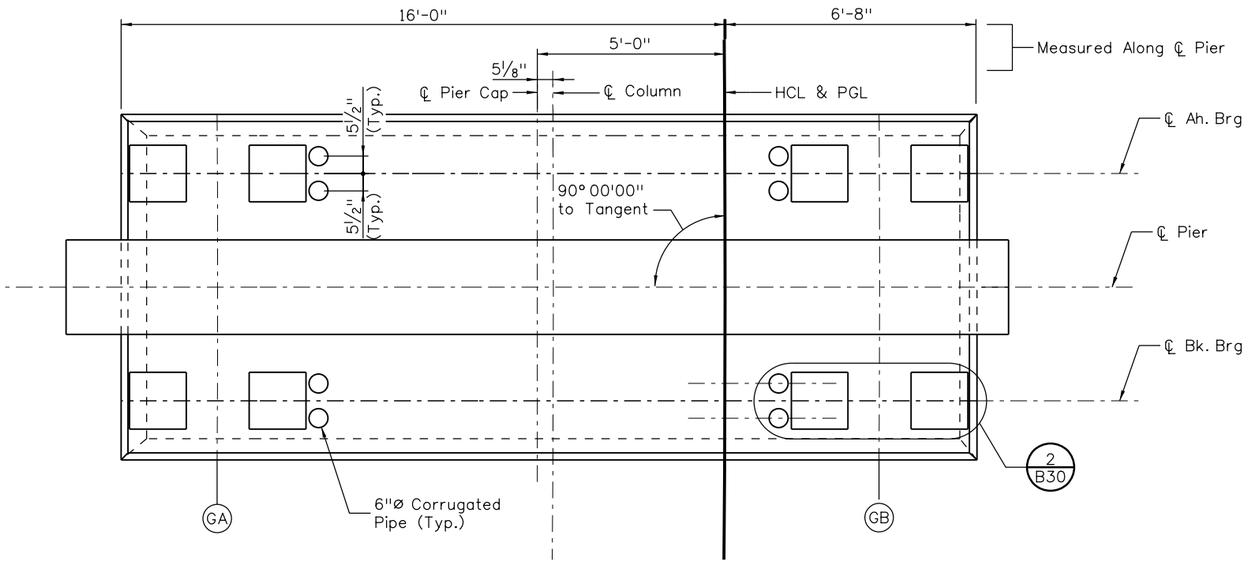

PLAN

(Dimensions are Horizontal)

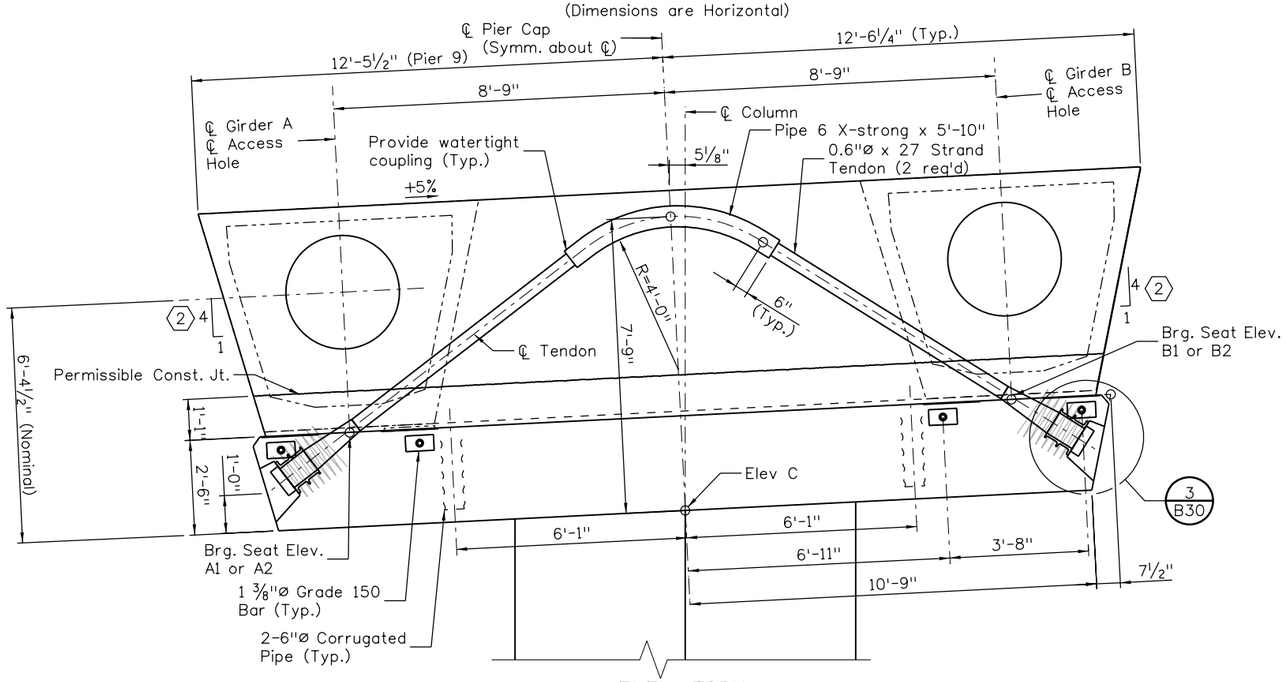

ELEVATION

(Looking Ahead Station)

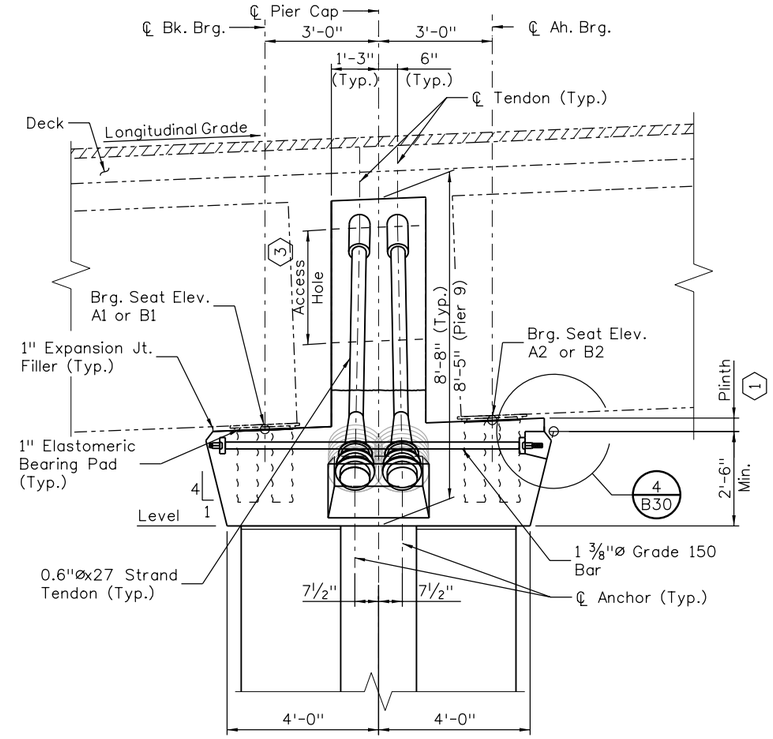

TYPICAL SECTION

NOTES:

1. Tendons shall be simultaneously double-end stressed to 80% GUTS (lock-off force = 864K) each.
2. Bars shall be stressed to 70% GUTS (lock-off force = 166K each).
3. Epoxy bonder, per Standard Specification 601.12(n) shall be used for all post-tensioning anchorage blockouts pourbacks.
4. Pipe 6 X-strong is incidental to post-tensioning.
5. For Pier column details, see sheet B23.
6. For Bearing details, see sheet B49.
7. For Girder details, see sheets B31 thru B37.
8. For Torsional Erection Brace details, see sheet B38.

KEYNOTES:

1. Plinths shall be set to accomodate longitudinal grade.
2. With respect to transverse slope.
3. Slope to match longitudinal grade.

DIMENSION AND ELEVATION TABLE

	P2	P3	P4	P5	P6	P8	P9	P10	P11	P12
Plinth (Ft)	0.35	0.35	0.35	0.35	0.35	0.26	0.05	0.34	0.32	0.16
Longitudinal Grade	0.04	0.04	0.04	0.04	0.04	0.03	-0.01	-0.04	-0.04	-0.02
Elev C	5424.93	5429.33	5434.54	5441.12	5447.52	5459.28	5461.74	5457.26	5450.93	5447.22
Elev A1	5427.05	5431.45	5436.66	5443.24	5449.64	5461.38	5463.85	5459.61	5453.26	5449.42
Elev A2	5427.29	5431.69	5436.90	5443.48	5449.88	5461.56	5463.81	5459.38	5453.04	5449.31
Elev B1	5427.93	5432.33	5437.53	5444.11	5450.51	5462.26	5464.73	5460.49	5454.13	5450.30
Elev B2	5428.17	5432.57	5437.77	5444.35	5450.75	5462.43	5464.69	5460.26	5453.91	5450.19

Revision Dates (Preliminary Stage On)** MM/YY

Quantities	INITIAL	DATE
Quantities By		
Checked By		

Detail	INITIAL	DATE
Detailed By	ERS	09/09
Checked By	KCS	11/09

Design	INITIAL	DATE
Designed By	KCS	09/09
Checked By		

18026 1:52:27 PM S:\Tranproj\100002375\14679\Consultants\Bridge\Drawings\14679_pBD-D706.dgn

Print Date: 12/31/2009
File Name: 14679_pBD-D706.dgn
Horiz. Scale: 1:4 Vert. Scale: As Noted
Staff Bridge Branch - Unit 0224 Unit Leader: MH

PBSJ 4601 DTC Boulevard Suite 700 Denver, CO 80237

Sheet Revisions		
Date:	Comments	Init.

Colorado Department of Transportation
DOT DEPARTMENT OF TRANSPORTATION
8833 South Wadsworth Court
Littleton, CO 80128
Phone: 303-972-9112 FAX: 303-972-9114
Region 6 RLB

As Constructed
No Revisions:
Revised:
Void:

SB SANTA FE TO EB C470 RAMP
INTERIOR PIER CAP
POST-TENSIONING AND DIMENSIONS

Designer: K. Saindon
Detailer: E. Schawo
Sheet Subset: Bridge
Structure Numbers F-16-YE
Subset Sheets: B28 of 72

Project No./Code
ES6 0852-103
17679
Sheet Number 217

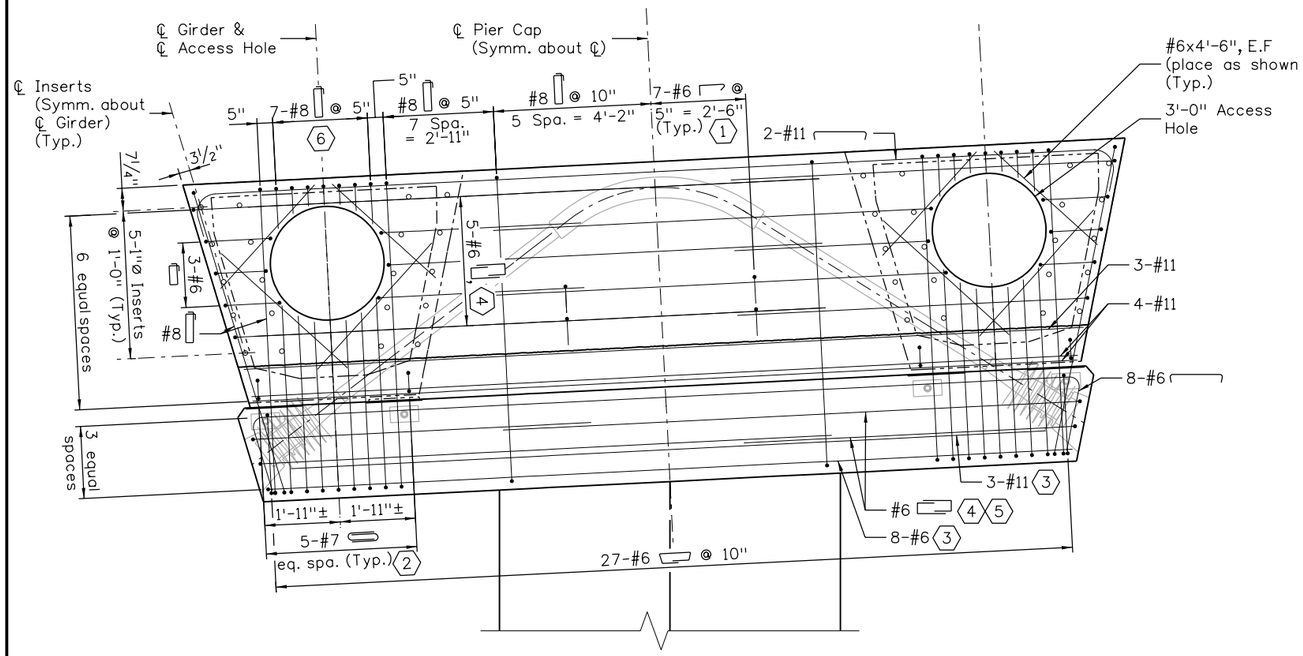

ELEVATION
(Looking Ahead Station)

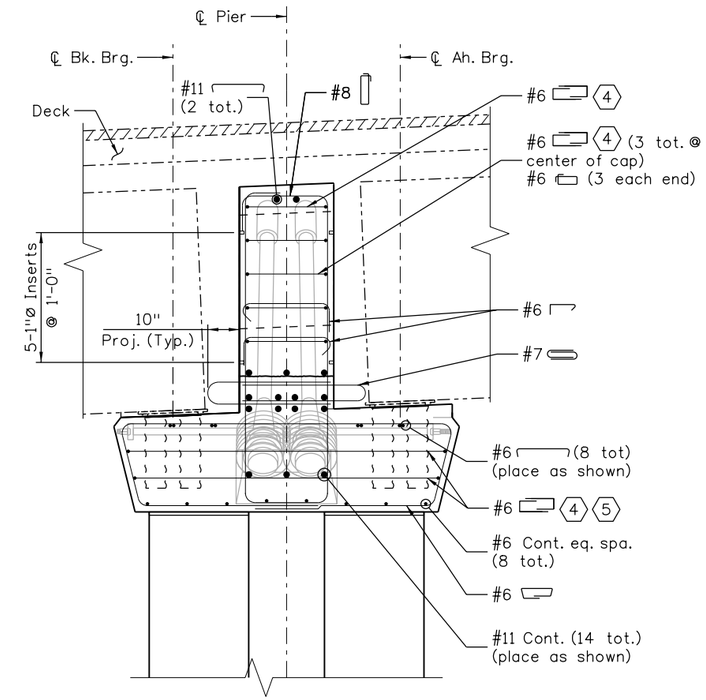

TYPICAL SECTION

KEYNOTES:

1. Alternate hooks.
2. Adjust spacing to clear PT tendons.
3. Cut bars as needed to clear PT blockout.
4. Stagger splices.
5. See sheet B30 for treatment of bars at PT blockout.
6. Cut stirrups as needed to clear access holes.

NOTES:

For additional Interior Pier details and notes, see sheet B28.

For additional information on inserts, see sheets B39 and B40.

Revision Dates	MM/YY
(Preliminary Stage On)**	

Quantities	INITIAL	DATE
Quantities By		
Checked By		

Detail	INITIAL	DATE
Detailed By	ERS	09/09
Checked By	KCS	11/09

Design	INITIAL	DATE
Designed By	KCS	09/09
Checked By		

18026 1:52:30 PM S:\Tranproj\100002375\14679\Consultants\Bridge\Drawings\14679_pBD-D707.dgn

Print Date: 12/31/2009
File Name: 14679_pBD-D707.dgn
Horiz. Scale: 1:4 Vert. Scale: As Noted
Staff Bridge Branch - Unit 0224 Unit Leader: MH

PBSJ 4601 DTC Boulevard Suite 700 Denver, CO 80237

Sheet Revisions		
Date:	Comments	Init.

Colorado Department of Transportation
DOT DEPARTMENT OF TRANSPORTATION
8833 South Wadsworth Court
Littleton, CO 80128
Phone: 303-972-9112 FAX: 303-972-9114
Region 6 RLB

As Constructed
No Revisions:
Revised:
Void:

SB SANTA FE TO EB C470 RAMP
INTERIOR PIER CAP
REINFORCING DETAILS

Designer: K. Saindon
Detailer: E. Schawo
Sheet Subset: Bridge
Structure Numbers F-16-YE
Subset Sheets: B29 of 72

Project No./Code
ES6 0852-103
17679
Sheet Number 218

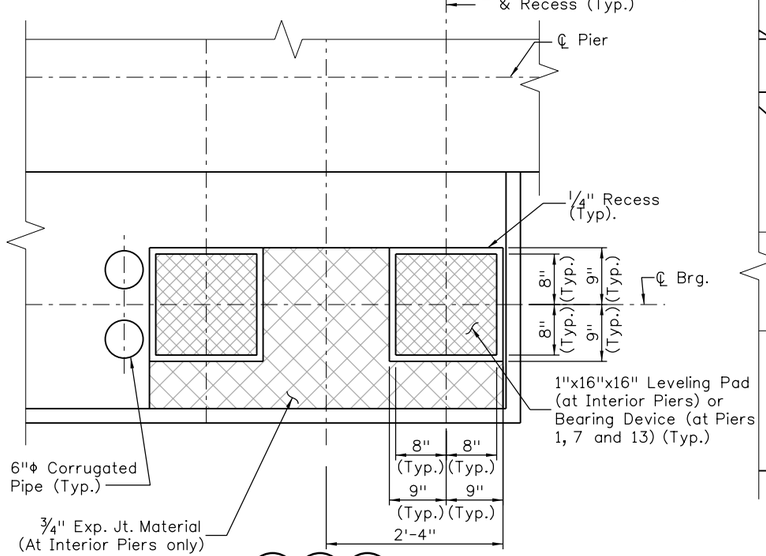

DETAIL 2/B24 2/B26 2/B28

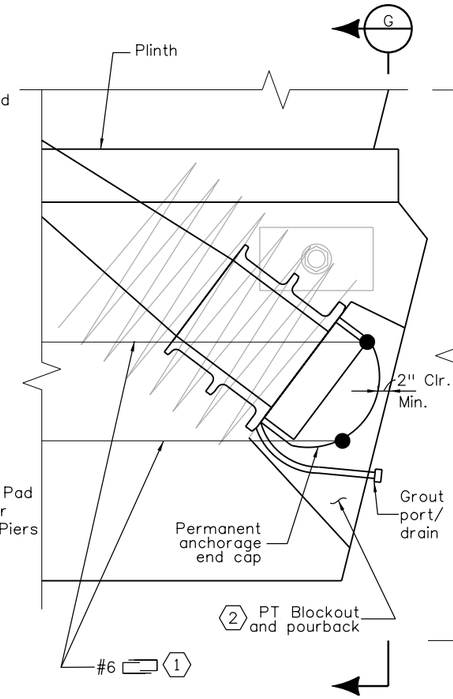

DETAIL 3/B24 3/B26 3/B28

(#6 Stirrups shown, For additional reinforcing See Pier reinforcing Sheets.)

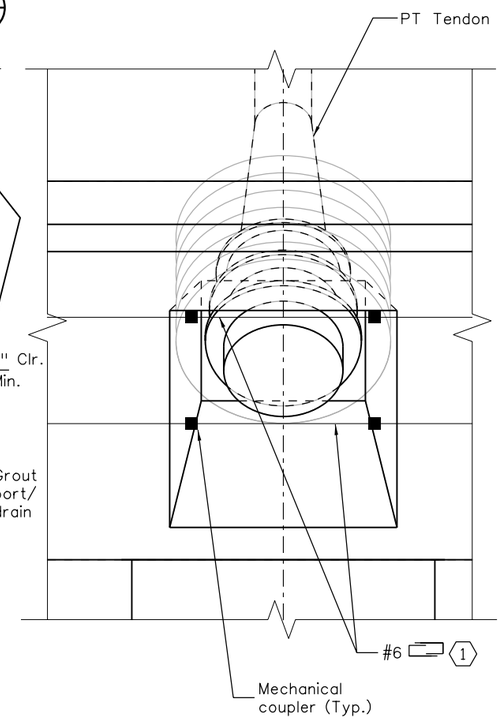

VIEW G

(At Piers 1 and 13)

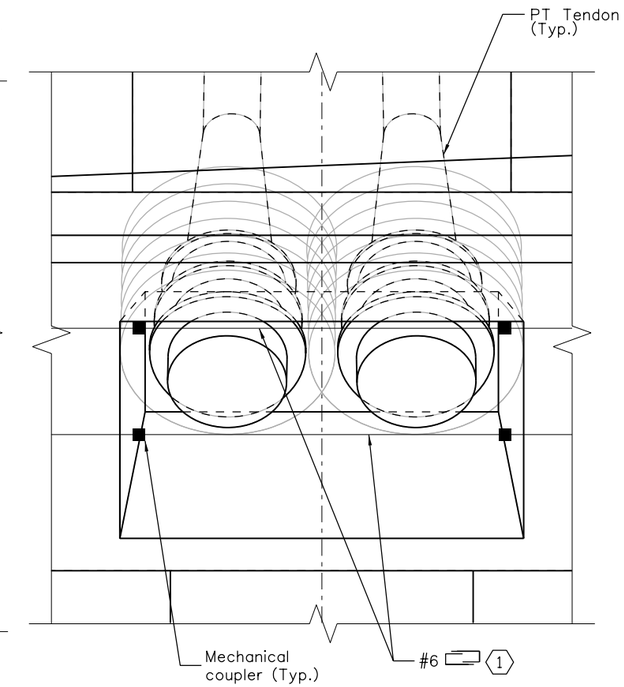

VIEW G

(At Piers 2 thru 12)

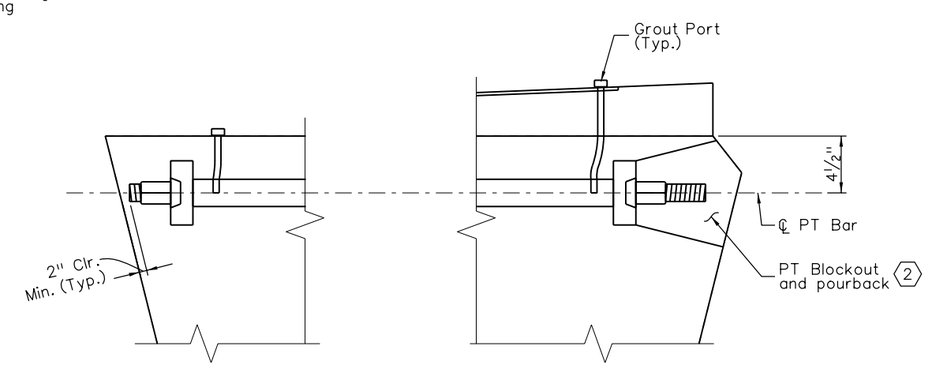

DETAIL 4/B24 4/B26 4/B28

NOTES:

1. Contractor shall submit a grouting control plan with PT shop drawings.
2. All grouting shall conform to Standard Specification 618.09.

KEYNOTES:

1. Mechanically connect bars in blockout as needed for tensioning of PT tendons.
2. Epoxy bonder, per Standard Specification 601.12(n) shall be used for all post-tensioning anchorage blockouts pourbacks. See Exp. Pier Dim. & PT sheet.

Quantities		
	INITIAL	DATE
Quantities By		
Checked By		

Detail		
	INITIAL	DATE
Detailed By	ERS	09/09
Checked By	KCS	11/09

Design		
	INITIAL	DATE
Designed By	KCS	09/09
Checked By		

Revision Dates MM/YY (Preliminary Stage Only)

18026 1:52:33 PM S:\Tranproj\100002375\14679\Consultants\Bridge\Drawings\14679_pBD-D710.dgn

Print Date: 12/31/2009
File Name: 14679_pBD-D710.dgn
Horiz. Scale: 1:4 Vert. Scale: As Noted
Staff Bridge Branch - Unit 0224 Unit Leader: MH

PBSJ 4601 DTC Boulevard Suite 700 Denver, CO 80237

Sheet Revisions		
Date:	Comments	Init.

Colorado Department of Transportation
DOT DEPARTMENT OF TRANSPORTATION
8833 South Wadsworth Court
Littleton, CO 80128
Phone: 303-972-9112 FAX: 303-972-9114
Region 6 RLB

As Constructed
No Revisions:
Revised:
Void:

SB SANTA FE TO EB C470 RAMP
PIER CAP MISCELLANEOUS DETAILS

Designer: K. Saindon
Detailer: E. Schawo
Sheet Subset: Bridge
Structure Numbers F-16-YE
Subset Sheets: B30 of 72

Project No./Code
ES6 0852-103
17679
Sheet Number 219

NOTES:

All work necessary to fabricate and install the integral parts of the girder (including the internal diaphragms, if any, and leveling pads), as shown on the plans, shall be included in the bid price for Item No. 618, Prestressed Concrete U (Curved) with a pay unit of Lin. Ft. measured by the dimension L.

When approved by the Engineer, a minimum of tack welding will be permitted on ASTM A706 uncoated reinforcing steel. Reinforcing projecting from the top and end of the girder, reinforcing in the top flange, and reinforcing within eight feet of an expansion device in the bridge deck shall be epoxy coated. Damaged coating on girder reinforcing need not be repaired. The minimum cover for reinforcing steel and post-tensioning anchors is 1".

At girder ends embedded in concrete diaphragms, cut strands to project 3", except as shown. Do not make cosmetic repairs (damage less than 1-1/2" deep) to the parts of the girders embedded in concrete.

Use low relaxation strands meeting the requirements of ASTM A-416 Grade 270 or higher. The minimum clear distance between groups (bundles) or individual strands shall be 2.3 x strand dia. but not less than 1-1/4". Monostrand or prestressing strand shall not be bundled in groups of more than 4 strands. The minimum cover for prestressing steel and unbonded Monostrand is 1-1/2". The minimum cover for post-tensioning ducts is 2". The minimum clear space between post-tensioning ducts is 2". A minimum of two harping points shall be used per girder. Harped strands shall be well distributed at the girder ends, starting within 4" of the top of the girder. The Contractor shall place #4 x 10'-0" spaced at 1'-0" and located parallel to the harped strands in the sides of the end of the webs, anchored into superstructure diaphragms or splice concrete to connect torsional loads. The C.G. of tensioning in the end 1/3 of girder length, or in the end 1/5 of the girder length near expansion joints, may deviate upwards from the prescribed path by up to .06 of the girder depth at one location each end to control construction stresses. Note that the camber will decrease.

The girder shall be tensioned by pretensioning, or bonded post-tensioning, supplemented by mild reinforcing to provide the required ultimate strength. Additional tensioning to achieve service stress limits or camber control may be provided with unbonded encapsulated monostrand suitable for aggressive envoirnments with exposure to deicing salts.

Inside of curve (A) Girders may be fabricated to the radius of the CL of the outside girder (B) provided that provision is made in the deck formwork for the increase in girder spacing mid span of up to 0.8". Girders in spans 5 8, 9, and 10 may be fabricated identical. Girders in Spans 6 & 7 may be mirror image and otherwise identical. Inside of curve girders may be fabricated with the concrete strength and tensioning of the adjacent outside girder.

The girders in span 8 and 9 shall have the top flange thickness tapered off on top by 0.15' over a distance no greater than the end 1/3 of the girder length in order to help fit the vertical curve. The girders in the other spans may have the top flange thickness similarily tapered to control shipping weights. If other girders have the top flange and girder depth reduced 0.15' at the ends, no adjustments to the pay concrete quantities shall be made for the extra haunch concrete due to this adjustment.

If post tensioning ducts no larger than 3" nominal diameter are used, the bottom fillets may be reduced and a bottom flange thickness of 8.35" used.

The top flange longitudinal #4 bars are a required part of the deck reinforcing and torsional reinforcing.

Anchor set assumed = 0.25" for unbonded monostrand;
= 0.375" for bonded post-tensioning.
Wobble factor assumed = 0.0014/ft for unbonded monostrand;
= 0.0002 for bonded post-tensioning.
Friction factor assumed = 0.05 for unbonded monostrand;
= 0.20 for bonded post-tensioning.
Single end jacking is assumed for all tendons and monostrand.

As* = minimum area of the bonded pre-stressing steel. The area of the bottom flange longitudinal #6 bars shown was used in the design to reduce the required quantity of bonded prestressing steel.
f's = ultimate strength of the pre-stressing steel.
Fj = jacking force per girder.
Ff = final force per girder after all losses.
F'ci = required concrete strength at release of prestress force.
F'c = required concrete strength at 28 days of age.
L = length of girder. The girder length specified includes a provision for expected elastic shortening, creep, and shrinkage. (Does not include the affect of grade taken along the curve of the ℄ Girder).
Lh = L/8
P = Projection.

Concrete shall be Class PS.

Entrained air is not required for girder concrete.

All permanent structural steel in girders or diaphragms shall be galvanized.

Use 1/2" chamfer on all corners, except as noted.

Predicted camber is the camber for the girder alone prior to the deck pour. The Contractor shall limit the camber to a value not to deviate from the predicted camber by more than the tolerance indicated at the time of the deck pour by weighting, scheduling fabrication, post tensioning, changing storage support points, or other means and must report to the Engineer values of camber which deviate from the predicted camber by more than this tolerance. Report sag of any magnitude at any stage of loading after tensioning is applied and check camber deviations after girder erection prior to formwork placement. Remedial measures, as approved by the Engineer, shall be taken if the tolerance is exceeded. The approved remedial measures shall be free of any adverse impact. The costs associated with all remedial measures shall be borne by the Contractor.

Dimensional tolerances for precast "U" girders shall be those tolerances specified in MNL-116 as shown for I girders with the following exceptions: Flange widths and widths between flanges ±1/16"/ft width, ±1/4" minimum. Variation from specified plan end squareness or skew, ±1/8"/ft width of each flange or overall width.

D20 wires may be used in lieu of #4.
Lightly tensioned strand is an alternate for #4 cont.

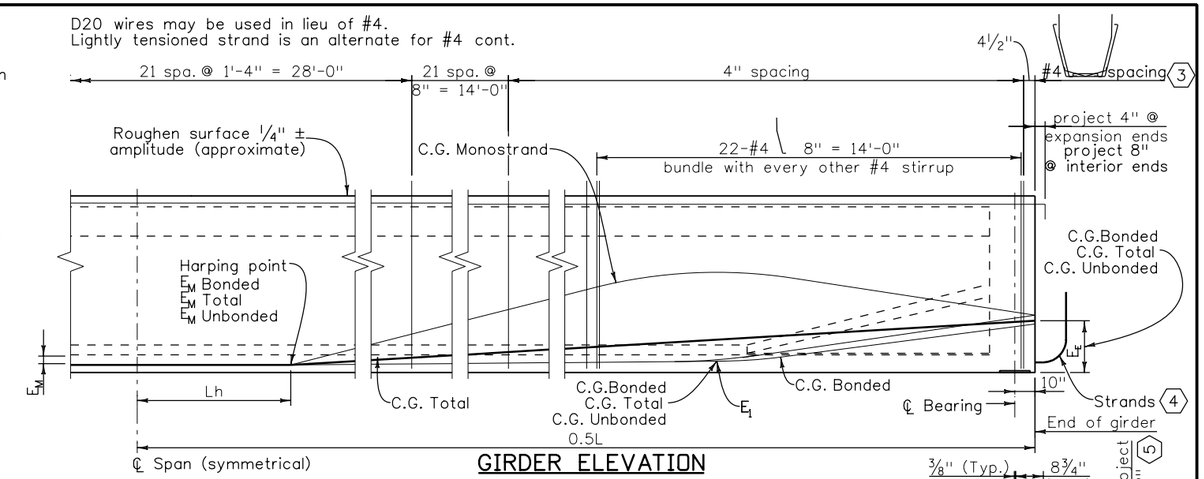

GIRDER ELEVATION

KEYNOTES:

(1) 1'-0" at Pier 1 Prepour 8" of tapered haunch first half of span.

(2) Prepour 4" of tapered haunch on end thirds of span.

(3) Omit #4 and #4 at end diaphragm.

(4) If pretensioning is used in lieu of post-tensioning, contractor may replace #6 with 16-0.6"Ø strands at interior piers. Extend strands 2'-0".

(5) Project 13" in the middle 1/3 of the member varying to the specified haunch at the bearing plus 12". At spans 9 and 10 the projection shall be 13" at the end of the members varying to 20" in the middle third. Field bend over the top of deck longitudinal bars.

(6) Deflection at centerline of span due to cast-in-place slab, diaphragms, asphalt, curbs, rails, and walks.

(7) Not a design requirement: for informatin only.

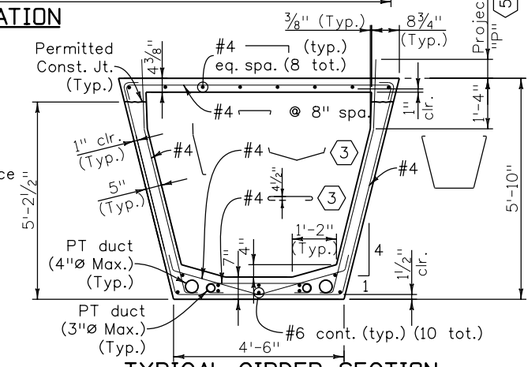

TYPICAL GIRDER SECTION

GIRDER SCHEDULE

Span No.	Girder No.	L (Ft.)	Top Flange at Girder End (In.)	Fj (KIPS)	Ff (KIPS)	As* (In.2)	E_M of Total PS Steel (In.2)	E_1 of Total PS Steel (In.)	E_E of Total PS Steel (In.)	(7) E_M of Bonded PS Steel (In.)	(7) E_1 of Bonded PS Steel (In.)	(7) E_E of Bonded PS Steel (In.)	(7) E_M of Unbonded PS Steel (In.)	(7) E_1 of Unbonded PS Steel (In.)	(7) E_E of Unbonded PS Steel (In.)	F'ci KSI	F'c KSI	Expected Camber (In.)	Δ (In.) (6)	±Tolerance on Camber (In.)	"H" Haunch at Bearing (In.)
1	1A	128.5	4.4	3159	1980	9.9	5.2	17.2	20.5	4.2	4.2	17.5	6.9	39.7	25.7	4.8	6.5	4.4	3.5	1.3	4.6
	1B	131.14	4.4	3159	1980	9.9	5.2	17.2	20.5	4.2	4.2	17.5	6.9	39.9	25.7	4.8	6.5	4.4	3.8	1.3	4.6 (1)
2	2A	104.05	4.4	2309	1491	7.5	5.2	16.2	20.5	4.2	4.2	19.5	7.1	39.2	22.4	4.0	6.5	2.9	1.1	0.9	4.6
	2B	106.21	4.4	2309	1491	7.5	5.2	16.3	20.5	4.2	4.2	19.5	7.1	39.5	22.4	4.0	6.5	2.9	1.2	0.9	4.6
3	3A	125.75	4.4	2633	1705	8.3	5.2	17.1	20.5	4.2	4.2	17.5	7.0	39.8	25.8	4.0	6.5	3.7	2.7	1.2	4.5
	3B	128.33	4.4	2633	1705	8.3	5.2	17.2	20.5	4.2	4.2	19.0	7.0	40.0	23.1	4.0	6.5	3.6	2.9	1.2	4.5
4	4A	158.31	4.4	4374	2460	13.4	5.2	17.9	20.5	4.7	4.7	19.2	6.0	39.5	22.6	6.6	8.5	7.7	6.6	2.5	6.7
	4B	161.54	4.4	4374	2460	13.4	5.2	18.0	20.5	4.7	4.7	19.2	6.0	39.6	22.6	6.6	8.5	7.7	7.1	2.5	6.7
5	5A	153.37	4.4	4172	2403	12.8	5.2	17.8	20.5	4.7	4.7	19.2	6.0	39.3	22.6	6.2	8.5	7.1	5.6	2.3	6.8
	5B	156.5	4.4	4172	2403	12.8	5.2	17.9	20.5	4.7	4.7	19.2	6.0	39.5	22.6	6.2	8.5	7.1	6.1	2.3	6.8
6	6A	141.22	4.4	3969	2219	11.6	5.2	17.5	20.5	4.7	4.7	19.2	5.9	36.1	22.4	5.9	8.5	5.8	4.9	1.7	5.3
	6B	144.11	4.4	3969	2219	11.6	5.2	17.6	20.5	4.7	4.7	19.2	5.9	36.3	22.4	5.9	8.5	5.9	5.2	1.7	5.3
7	7A	144.11	4.4	3969	2219	11.6	5.2	17.6	20.5	4.7	4.7	19.2	5.9	36.3	22.4	5.9	8.5	5.9	4.9	1.7	3.4
	7B	141.22	4.4	3969	2219	11.6	5.2	17.5	20.5	4.7	4.7	19.2	5.9	36.1	22.4	5.9	8.5	5.9	5.2	1.7	3.5
8	8A	153.38	2.4	4374	2460	13.4	5.2	17.8	20.5	4.7	4.7	19.2	6.0	39.2	22.6	6.6	8.5	7.4	5.6	2.5	1.1
	8B	156.51	2.4	4374	2460	13.4	5.2	17.9	20.5	4.7	4.7	19.2	6.0	39.4	22.6	6.6	8.5	7.4	6.1	2.5	1.1
9	9A	153.38	2.4	4374	2460	13.4	5.2	17.8	20.5	4.7	4.7	19.2	6.0	39.2	22.6	6.6	8.5	7.4	5.7	2.5	1.2
	9B	156.51	2.4	4374	2460	13.4	5.2	17.9	20.5	4.7	4.7	19.2	6.0	39.4	22.6	6.6	8.5	7.4	6.2	2.5	1.2
10	10A	153.37	4.4	4172	2403	12.8	5.2	17.8	20.5	4.7	4.7	19.2	6.0	39.3	22.6	6.2	8.5	7.0	5.8	2.3	6.7
	10B	156.51	4.4	4172	2403	12.8	5.2	17.9	20.5	4.7	4.7	19.2	6.0	39.5	22.6	6.2	8.5	7.0	6.4	2.3	6.7
11	11A	131.67	4.4	3159	1980	9.9	5.2	17.3	20.5	4.2	4.2	17.5	6.9	39.9	25.7	4.8	6.5	4.7	3.2	1.3	8.6 (2)
	11B	134.37	4.4	3159	1980	9.5	5.2	17.3	20.5	4.2	4.2	17.5	6.9	40.2	25.7	4.8	6.5	4.7	3.4	1.3	8.6 (2)
12	12A	100.44	4.4	2309	1491	7.5	5.2	16.0	20.5	4.2	4.2	19.5	7.1	38.6	22.4	4.0	6.5	2.7	1.2	0.9	6.2
	12B	102.52	4.4	2309	1491	7.5	5.2	16.1	20.5	4.2	4.2	19.5	7.1	38.9	22.4	4.0	6.5	2.7	1.3	0.9	6.2

Revision Dates (Preliminary Stage Only): MM/YY

Design	INITIAL	DATE
Designed By	MLM	10/09
Detailed By		
Checked By		

Detail	INITIAL	DATE
Detailed By	ERS	10/09
Checked By	MLM	11/09

Quantities	INITIAL	DATE
Quantities By		
Checked By		

18026 5:04:24 PM S:\Tranproj\100002375\14679\Consultants\Bridge\Drawings\14679_pBD-D711.dgn

Print Date: 1/4/2010
File Name: 14679_pBD-D711.dgn
Horiz. Scale: 1:1 Vert. Scale: As Noted
Staff Bridge Branch - Unit 0224 Unit Leader: MH

PBSJ 4601 DTC Boulevard Suite 700 Denver, CO 80237

Sheet Revisions

Date:	Comments	Init.

Colorado Department of Transportation
DOT DEPARTMENT OF TRANSPORTATION
8833 South Wadsworth Court
Littleton, CO 80128
Phone: 303-972-9112 FAX: 303-972-9114
Region 6 RLB

As Constructed
No Revisions:
Revised:
Void:

SB SANTA FE TO EB C470 RAMP
PRECAST TUB GIRDER DETAILS

Designer: M. McMullen
Detailer: E. Schawo
Structure Numbers: F-16-YE
Sheet Subset: Bridge
Subset Sheets: B31 of 72

Project No./Code
ES6 0852-103
17679
Sheet Number 220

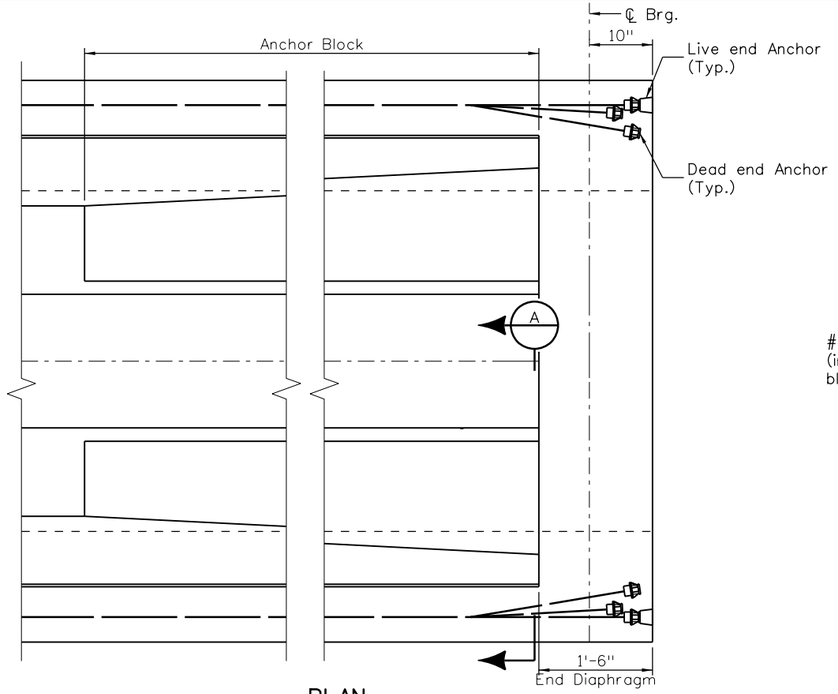

PLAN

(Top flange and reinforcing not shown for clarity)

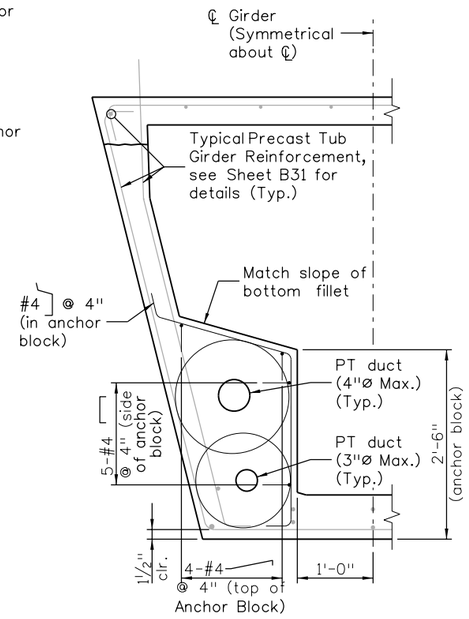

SECTION A

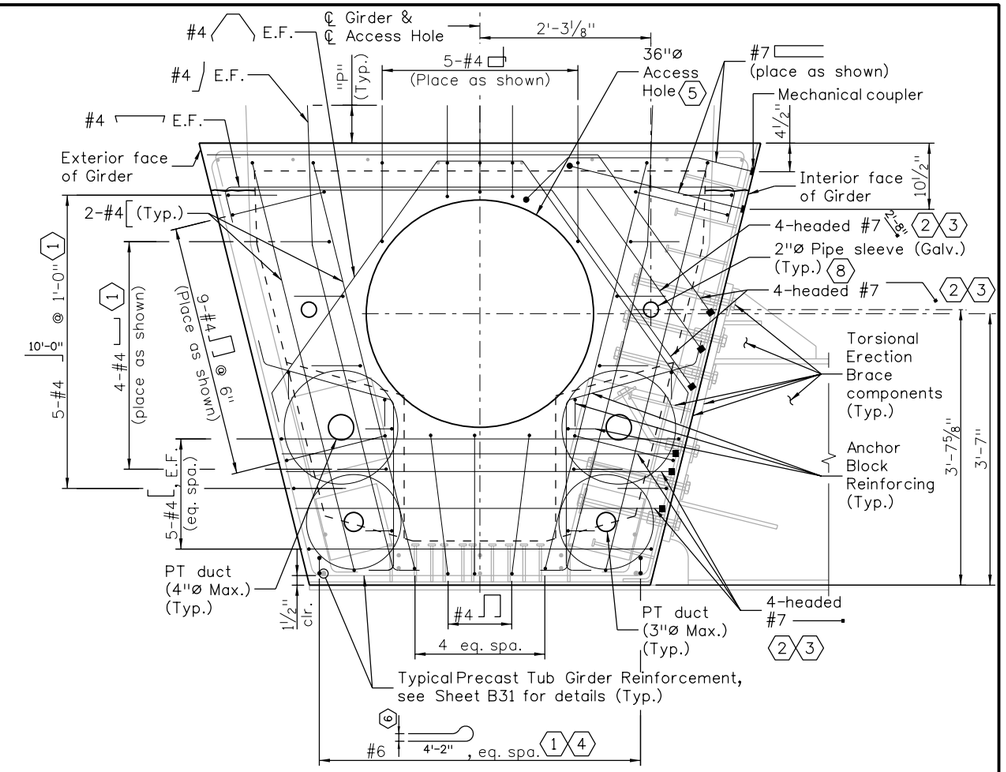

TYPICAL REINFORCING SECTION

(Symmetrical about ℄ Girder except as shown)

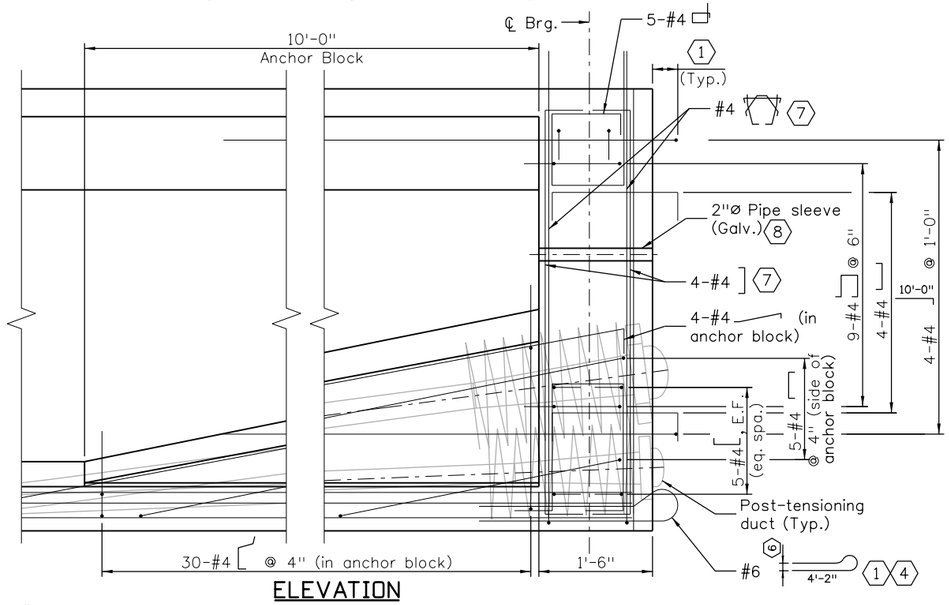

ELEVATION

(#7 stirrups, monostrands, and typical girder reinforcing not shown for clarity)

NOTES:

For additional notes and details, see Sheet B31 and Sheets B33 thru B37.

P = Projection. Diamension varies according to the specified haunch at the bearing plus 12". At spans 9 and 10 the projection shall be 13" at the end of the members. Field bend over the top of deck longitudinal bars.

For Post-Tensioning duct information and suggested monostrand pattern, see sheet B33.

For Torsional Erection Brace, see Sheet B38.

For Access Door Details, see sheets B37.

KEYNOTES:

1. Project 4" at expansion ends and 9" at fixed ends.
2. Place bars on either side of 1"ØX12" H.S. Bolts on interior face of girder.
3. Contractor may elect to use 2-#7 bars in lieu of headed 4-#7 bars. Loop around 1"ØX12" H.S. Bolts on interior face of girder.
4. Place 7 bars at interior piers and 5 bars at expansion piers. If pretensioning is used in lieu of post-tensioning, #6 bars at interior pier ends may be replaced by 16-0.6"Ø strands.
5. Access holes at End and Expansion Piers shall be filled with concrete when End Diaphragm at Expansion Pier is poured.
6. Adjust legs as needed to fit between stirrups.
7. Bend stirrups as needed to clear anchors.
8. Located at End and Expansion Piers only.

Revision Dates	MM/YY
(Preliminary Stage Only)	

Quantities	INITIAL	DATE
Quantities By		
Checked By		

Detail	INITIAL	DATE
Detailed By	ERS	10/09
Checked By	MLM	12/09

Design	INITIAL	DATE
Designed By	MLM	10/09
Checked By		

18026 1:52:39 PM S:\Tranproj\100002375\14679\Consultants\Bridge\Drawings\14679_pBD-D713.dgn

Print Date: 12/31/2009
File Name: 14679_pBD-D713.dgn
Horiz. Scale: 1:1 Vert. Scale: As Noted

PBSJ 4601 DTC Boulevard Suite 700 Denver, CO 80237

Sheet Revisions		
Date:	Comments	Init.

Colorado Department of Transportation
DOT DEPARTMENT OF TRANSPORTATION
8833 South Wadsworth Court
Littleton, CO 80128
Phone: 303-972-9112 FAX: 303-972-9114
Region 6 RLB

As Constructed
No Revisions:
Revised:
Void:

SB SANTA FE TO EB C470 RAMP
GIRDER END DIAPHRAGM (1 OF 2)

Designer: M. McMullen
Detailer: E. Schawo
Sheet Subset: Bridge
Structure Numbers: F-16-YE
Subset Sheets: B32 of 72

Project No./Code
ES6 0852-103
17679
Sheet Number 221

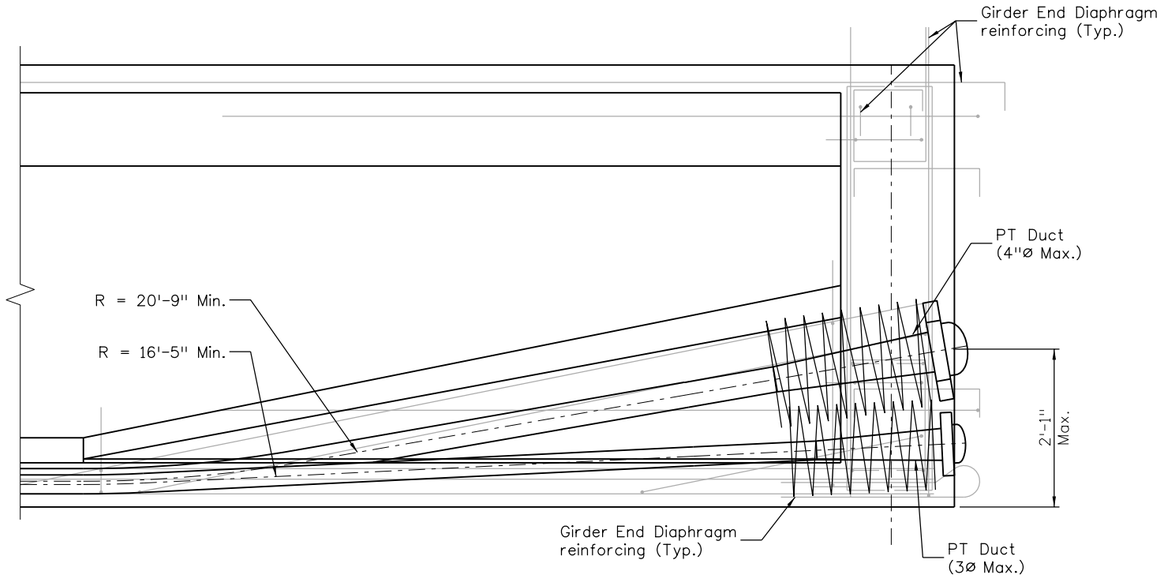

POST-TENSIONING DUCT ELEVATION AT GIRDER END DIAPHRAGM

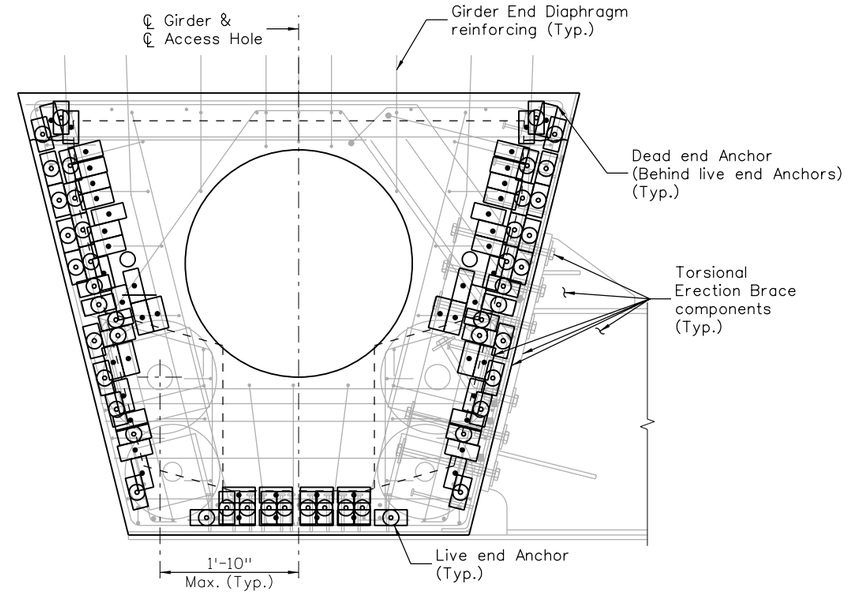

SUGGESTED STRAND PATTERN AT GIRDER END DIAPHRAGM

P(Jack) (Kips)	f'ci (ksi)	Anchorage Bearing Plate (ASTM A 36)		Reinforcing Steel Spiral (Grade 60)			
		Length of a Side (Inches)	Plate Thickness (Inches)	Rebar Size	Outside Diameter (Inches)	Number of Turns	Pitch (Inches)
835 to 527	3.5 to 4.5	16	2.25	6	21	9	3
	4.5 to 5.5	15	2.25	6	20	8	3
	5.5 to 6.5	14	2.25	6	19	8	3
	6.5 or larger	13	2.25	6	18	8	3
527 to 308	3.5 to 4.5	13	1.75	5	18	8	3
	4.5 to 5.5	12	1.75	5	17	7	3
	5.5 to 6.5	11	1.75	5	16	7	3
	6.5 or larger	10	1.75	5	15	7	3
308 or less	3.5 to 4.5	10	1.5	4	14	6	3
	4.5 to 5.5	9	1.5	4	13	6	3
	5.5 to 6.5	9	1.5	4	13	6	3
	6.5 or larger	8	1.5	4	12	6	3

P(Jack) = Tendon jacking force.
f' ci = Minimum concrete strength of stressing.

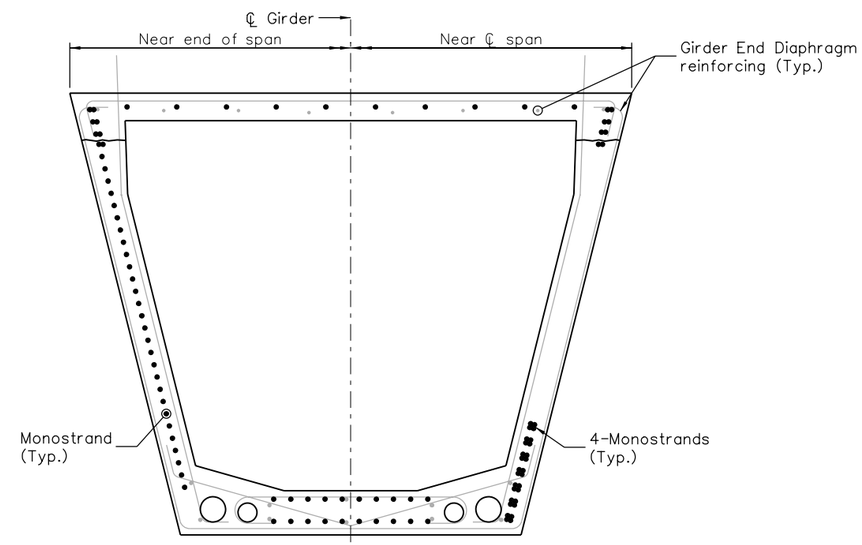

TYPICAL MONOSTRAND PATTERN LIMITS

Note: Monostrand Patterns shall be symmetrical about ℄ Girder.

Revision Dates	MM/YY

(Preliminary Stage Only)

Quantities			
	INITIAL	DATE	
Quantities By			
Checked By			

Detail			
	INITIAL	DATE	
Detailed By	ERS	10/09	Quantities By
Checked By	MLM	12/09	Checked By

Design			
	INITIAL	DATE	
Designed By	MLM	10/09	Detailed By
Checked By			Checked By

18026 1:52:43 PM S:\Tranpro\100002375\14679\Consultants\Bridge\Drawings\14679_pBD-D714.dgn

Print Date: 12/31/2009
File Name: 14679_pBD-D714.dgn
Horiz. Scale: 1:1 Vert. Scale: As Noted
Staff Bridge Branch - Unit 0224 Unit Leader: MH

PBSJ 4601 DTC Boulevard Suite 700 Denver, CO 80237

Sheet Revisions		
Date:	Comments	Init.

Colorado Department of Transportation
DOT DEPARTMENT OF TRANSPORTATION
8833 South Wadsworth Court
Littleton, CO 80128
Phone: 303-972-9112 FAX: 303-972-9114
Region 6 RLB

As Constructed
No Revisions:
Revised:
Void:

SB SANTA FE TO EB C470 RAMP
GIRDER END DIAPHRAGM (2 OF 2)

Designer:	M. McMullen	Structure Numbers	F-16-YE
Detailer:	E. Schawo		
Sheet Subset:	Bridge	Subset Sheets: B33 of 72	

Project No./Code
ES6 0852-103
17679
Sheet Number 222

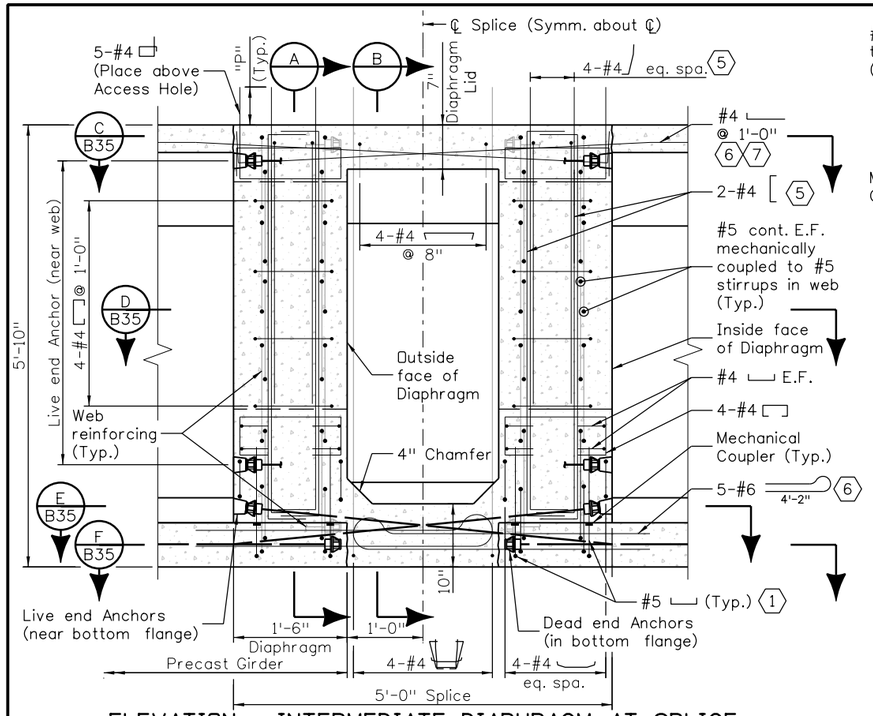

ELEVATION - INTERMEDIATE DIAPHRAGM AT SPLICE

(Taken between Access Hole and Girder Web)
(Post-tensioning ducts and web longitudinal reinforcing not shown for clarity)

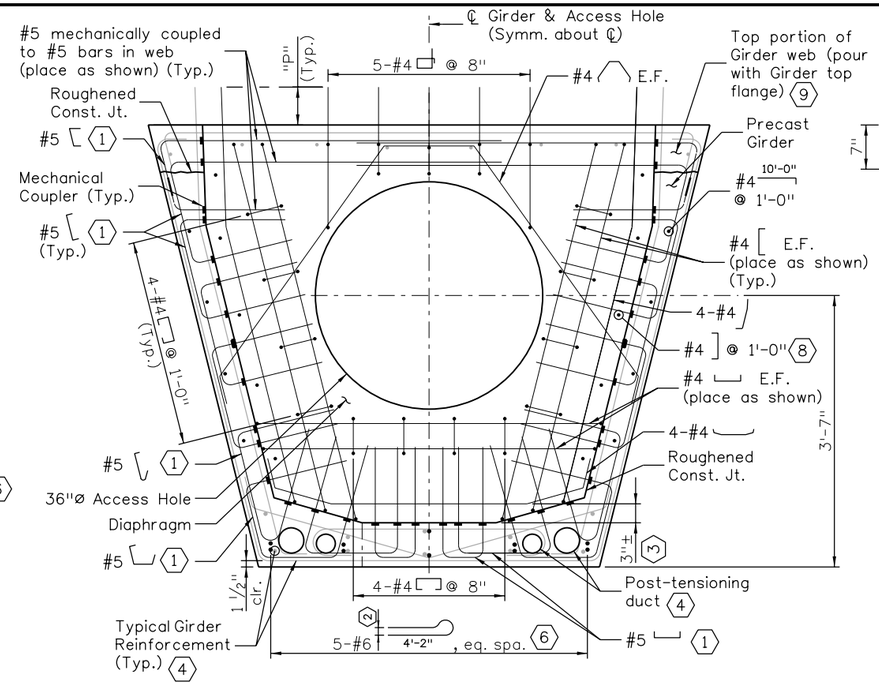

SECTION A

(Monostrands and anchors not shown for clarity)

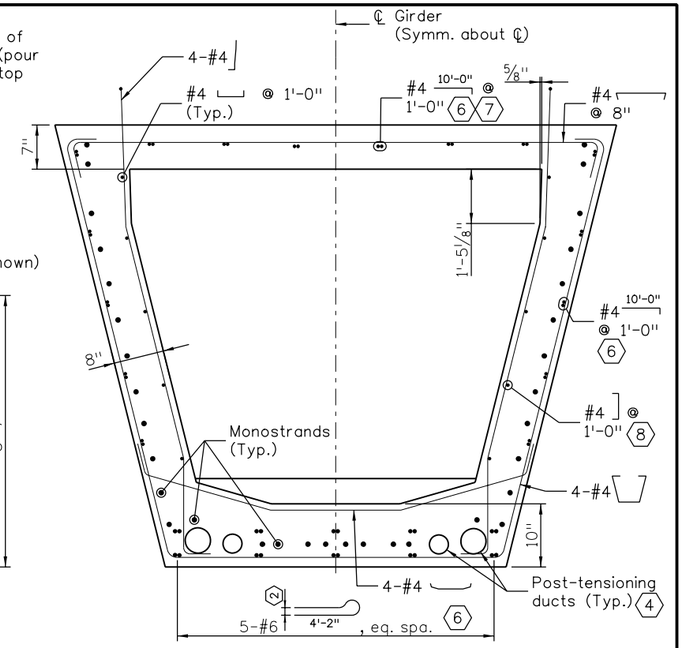

SECTION B

KEYNOTES:

1. Place mechanical coupler at ends and connect to #5, place as shown behind monostrand anchors.
2. Adjust legs as needed to fit between stirrups.
3. Place above monostrands.
4. For PT details, see Sheet B33.
5. Place on both sides of Access Hole.
6. Project 1'-11" from each precast girder end and 4'-11" from lid end.
7. Bend reinforcing down to 1" from bottom of diaphragm lid.
8. Adjust as needed to clear monostrand anchors and access hole.
9. Omit top flange and pour web up to match top of girder in diaphram area.

NOTES:

Girders may be spliced at one location in the end 1/3 of the girder length near a fixed pier.

Top flange of splice and diaphragm shall be poured monolithically.

P= Projection. 13" in the middle 1/3 of the member varying to the specified haunch at the bearing plus 12". At spans 9 and 10 the projection shall be 13" at the end of the members varying to 20" in the middle third. Field bend over the top of deck longitudinal bars.

For suggested monostrand pattern, see sheets B31 and B33.

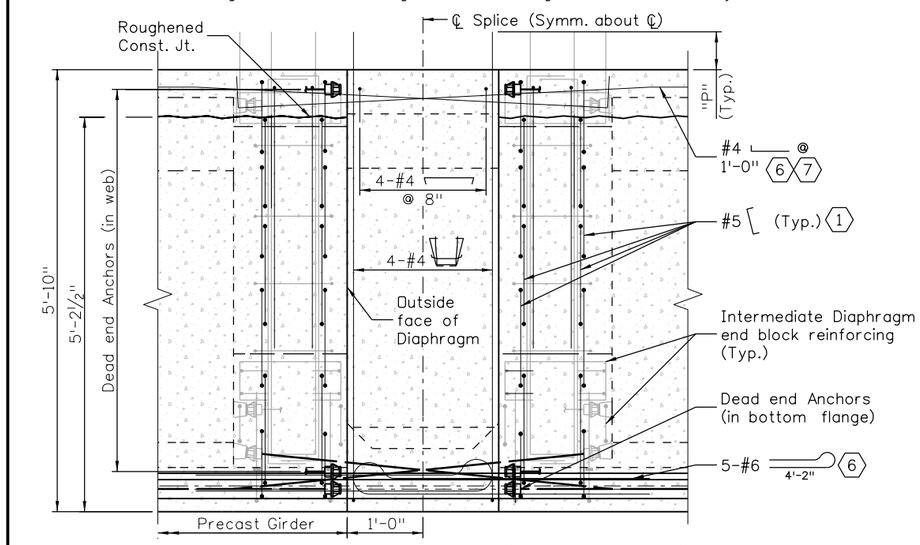

ELEVATION - INTERMEDIATE DIAPHRAGM AT SPLICE

(Taken between Access Hole and Girder Web)
(Post-tensioning ducts and web longitudinal reinforcing not shown for clarity)

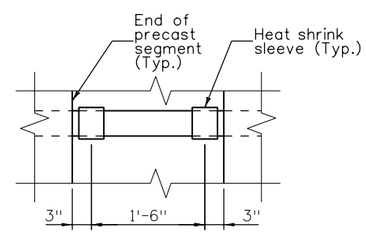

DUCT SPLICE DETAIL

Revision Dates	
(Preliminary Stage Only)	
MM/YY	

Quantities			
	INITIAL	DATE	
Quantities By			
Checked By			

Detail			
	INITIAL	DATE	
Detailed By	ERS	10/09	
Checked By	MLM	12/09	

Design			
	INITIAL	DATE	
Designed By	MLM	10/09	
Checked By			

18026 1:52:47 PM S:\Tranproj\100002375\14679\Consultants\Bridge\Drawings\14679_pBD-D715.dgn

Print Date: 12/31/2009
File Name: 14679_pBD-D715.dgn
Horiz. Scale: 1:1 Vert. Scale: As Noted

PBSJ 4601 DTC Boulevard Suite 700 Denver, CO 80237

Sheet Revisions		
Date:	Comments	Init.

Colorado Department of Transportation
8833 South Wadsworth Court
Littleton, CO 80128
Phone: 303-972-9112 FAX: 303-972-9114
Region 6 RLB

As Constructed
No Revisions:
Revised:
Void:

SB SANTA FE TO EB C470 RAMP
GIRDER SPLICE SCHEMATIC (1 OF 2)

Designer: M. McMullen
Detailer: E. Schawo
Sheet Subset: Bridge
Structure Numbers: F-16-YE
Subset Sheets: B34 of 72

Project No./Code
ES6 0852-103
17679
Sheet Number 223

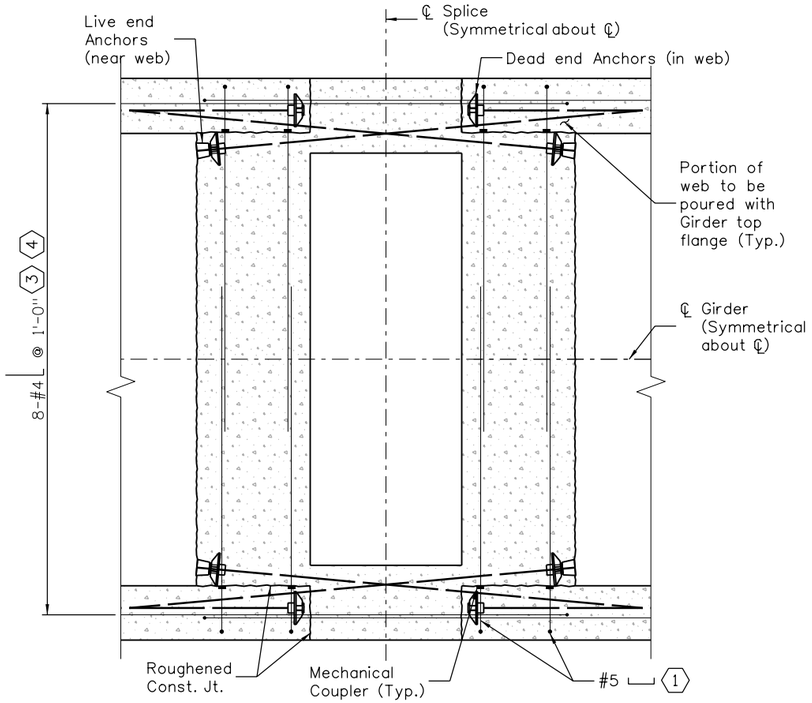

SECTION C B34

(Stirrups not shown for clarity)

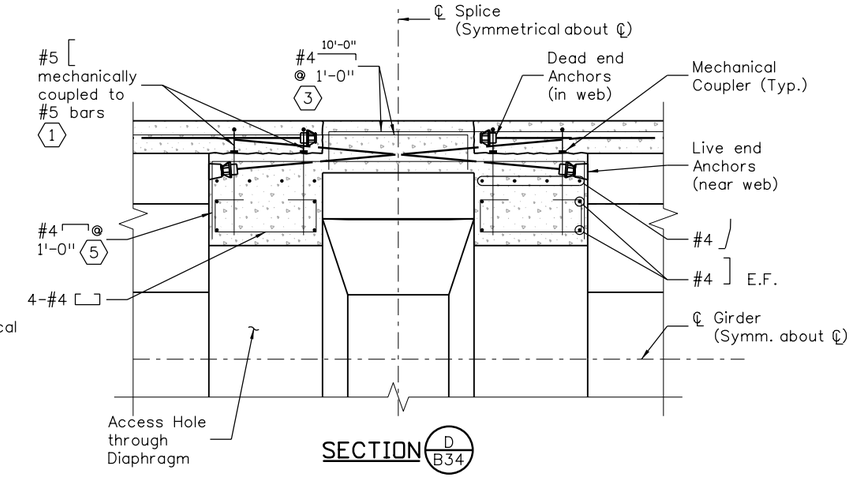

SECTION D B34

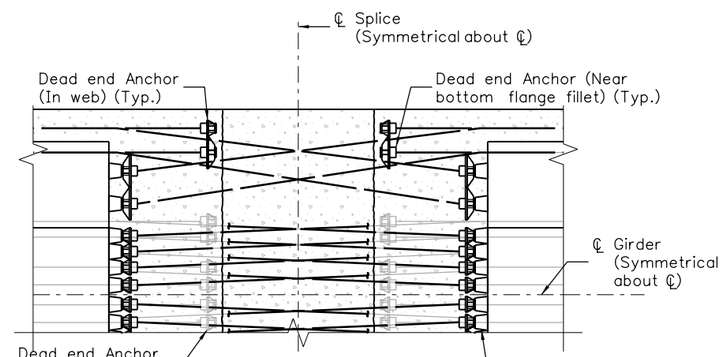

SECTION F B34

(PT ducts and reinforcing not shown for clarity)

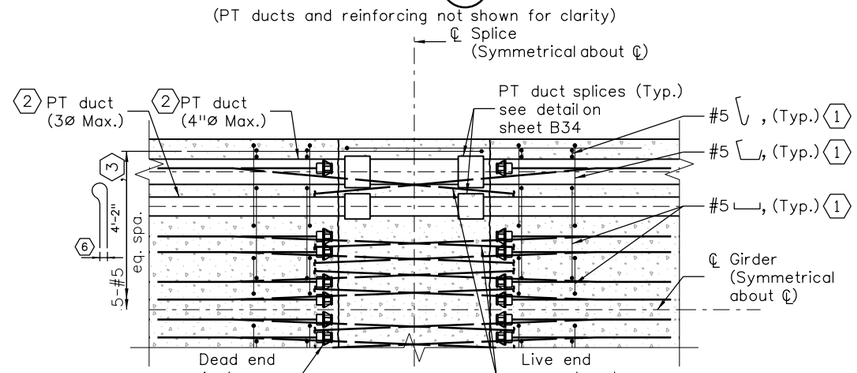

SECTION E B34

(Stirrups not shown for clarity)

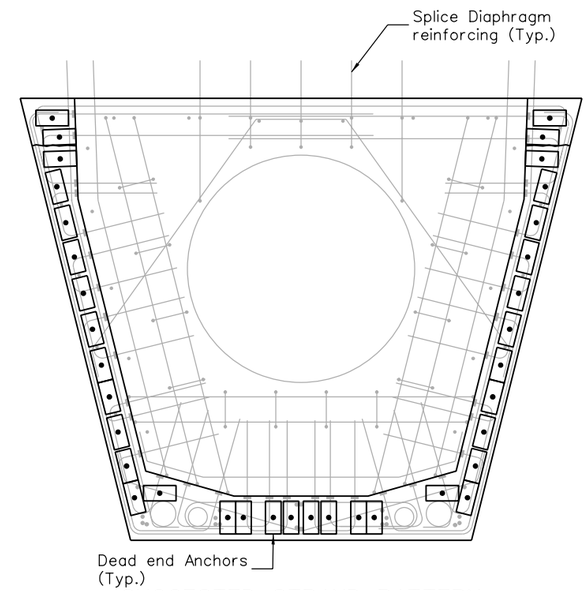

SUGGESTED STRAND PATTERN AT INTERMEDIATE DIAPHRAGM AT SPLICE

(Taken near outside face of Diaphragm)

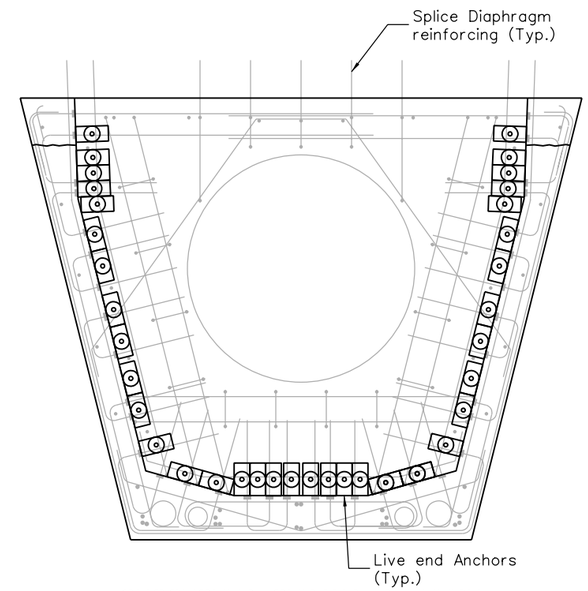

SUGGESTED STRAND PATTERN AT INTERMEDIATE DIAPHRAGM AT SPLICE

(Taken near inside face of Diaphragm)

KEYNOTES:

1. Place mechanical coupler at ends and connect to #5 bars, place as shown behind monostrand anchors.
2. For PT details, see Sheet B33.
3. Project 1'-11" from each precast girder end or 4'-11" from lid end.
4. Bend reinforcing down to 1" from bottom of diaphragm lid.
5. Adjust as needed to clear monostrand anchors and access hole.

NOTES:

For additional details and notes, see Sheet B34.

Not all potential strand locations may be required.

Revision Dates	MM/YY
(Preliminary Stage Only)	

Quantities	INITIAL	DATE
Quantities By		
Checked By		

Detail	INITIAL	DATE
Detailed By	ERS	10/09
Checked By	MLM	12/09

Design	INITIAL	DATE
Designed By	MLM	10/09
Checked By		

18026 1:52:53 PM S:\Tranproj\100002375\14679\Consultants\Bridge\Drawings\14679_pBD-D716.dgn

Print Date: 12/31/2009
File Name: 14679_pBD-D716.dgn
Horiz. Scale: 1:1 Vert. Scale: As Noted

PBSJ 4601 DTC Boulevard Suite 700 Denver, CO 80237

Sheet Revisions		
Date:	Comments	Init.

Colorado Department of Transportation
DOT DEPARTMENT OF TRANSPORTATION
8833 South Wadsworth Court
Littleton, CO 80128
Phone: 303-972-9112 FAX: 303-972-9114
Region 6 RLB

As Constructed
No Revisions:
Revised:
Void:

SB SANTA FE TO EB C470 RAMP
GIRDER SPLICE SCHEMATIC (2 OF 2)

Designer:	M. McMullen	Structure Numbers	F-16-YE
Detailer:	E. Schawo		
Sheet Subset:	Bridge	Subset Sheets: B35 of 72	

Project No./Code
ES6 0852-103
17679
Sheet Number 224

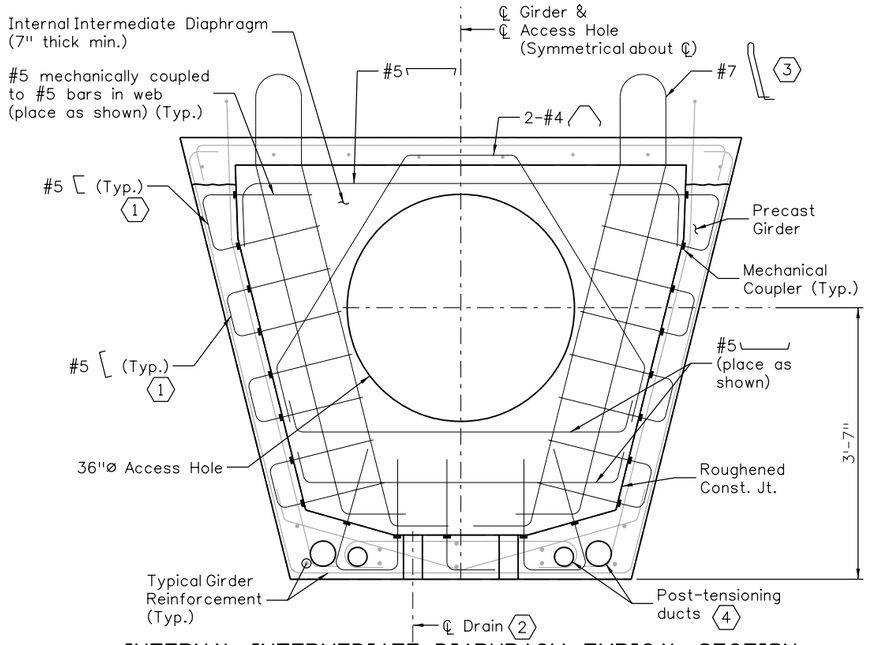

INTERNAL INTERMEDIATE DIAPHRAGM TYPICAL SECTION

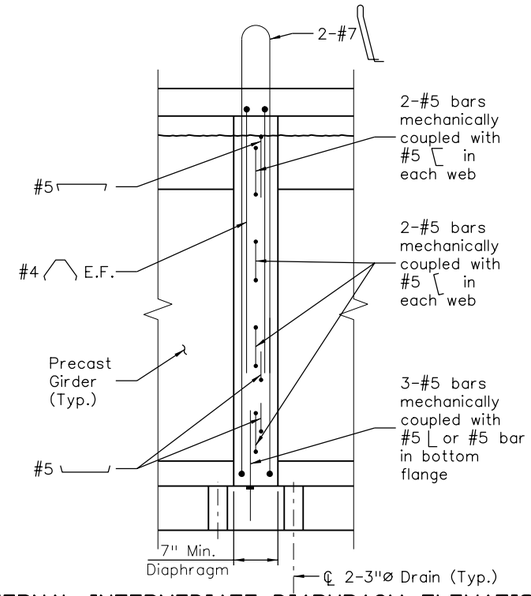

INTERNAL INTERMEDIATE DIAPHRAGM ELEVATION

(Post-tensioning ducts and typical girder reinforcing not shown for clarity)

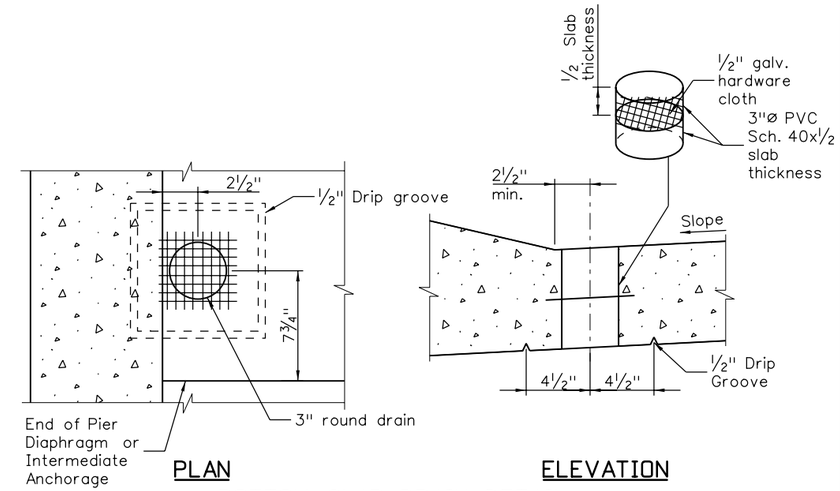

PLAN ELEVATION

BOTTOM SLAB DRAIN DETAIL

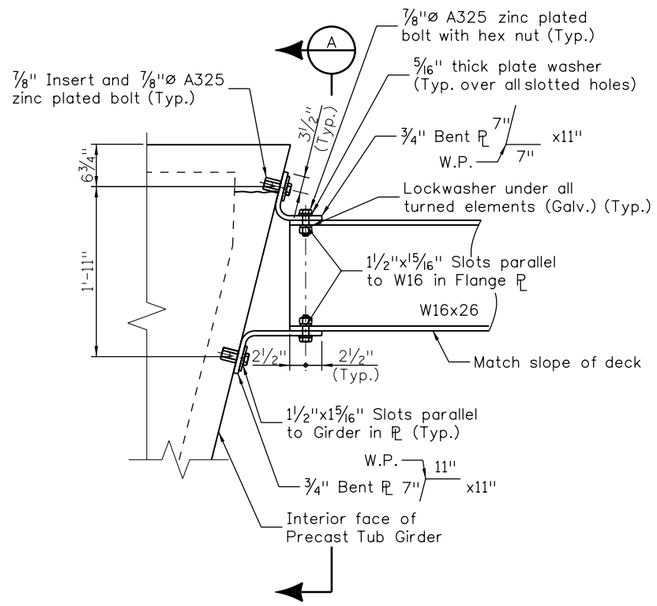

EXTERNAL INTERMEDIATE DIAPHRAGM DETAILS

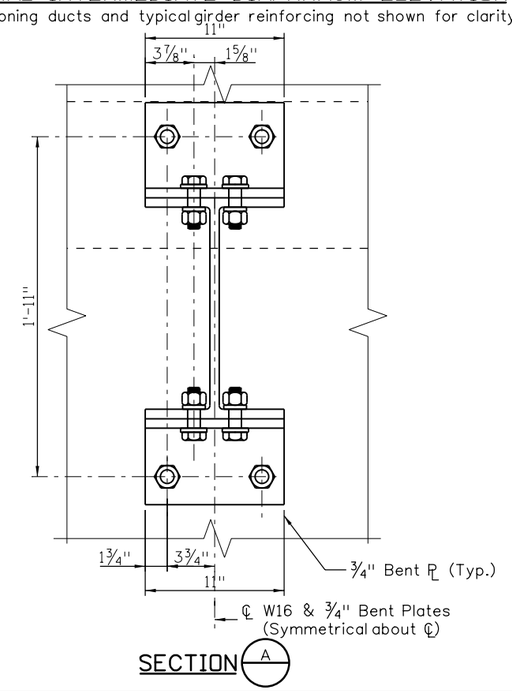

SECTION A

NOTES:

All External Intermediate Diaphragm materials, including bolts, nuts and washers shall be galvanized. Galvanize after fabrication. Bolts, nuts and lock washers may be zinc plated in lieu of being galvanized.

The External Intermediate Diaphragms may be placed on a skew such that they are between 80° and 100° to the girders.

The Contractor is responsible for determining necessary bracing requirements and for providing adequate bracing for the specific wind and weather conditions to be encountered for each specific project.

Use and installation of the External Intermediate Diaphragm shall not relieve the Contractor of full responsibility to construct the Work in a manner which provides all necessary rigidity, supports all loads imposed, and provides in the finished structure the lines and grades indicated on the plans.

Place External Intermediate Diaphragm in the middle 1/3 of the span.

The Internal Intermediate Diaphragm is optional and shall be located at the Contractor's discretion.

KEYNOTES:

1. Place mechanical coupler at ends and connect to #5, place as shown.
2. Place as shown adjacent to diaphragm. See detail, this sheet.
3. Place legs on opposite faces from each other.
4. For Post-tensioning Duct details, see sheet B33.

Quantities			
	INITIAL	DATE	
Quantities By			
Checked By			

Detail			
	INITIAL	DATE	
Detailed By	ERS	11/09	
Checked By	MLM	12/09	

Design			
	INITIAL	DATE	
Designed By	MLM	10/09	
Checked By			

Revision Dates	
MM/YY	

(Preliminary Stage Only)

18026 1:53:00 PM S:\Tranproj\100002375\14679\Consultants\Bridge\Drawings\14679_pBD-D717.dgn

Print Date: 12/31/2009	Sheet Revisions		
File Name: 14679_pBD-D717.dgn	Date:	Comments	Init.
Horiz. Scale: 1:1 Vert. Scale: As Noted			
Staff Bridge Branch - Unit 0224 Unit Leader: MH			

PBSJ 4601 DTC Boulevard Suite 700 Denver, CO 80237

Colorado Department of Transportation
8833 South Wadsworth Court
Littleton, CO 80128
Phone: 303-972-9112 FAX: 303-972-9114
Region 6 RLB

As Constructed			
No Revisions:			
Revised:			
Void:			

SB SANTA FE TO EB C470 RAMP GIRDER INTERMEDIATE DIAPHRAGMS

Designer:	M. McMullen	Structure Numbers	F-16-YE
Detailer:	E. Schawo		
Sheet Subset:	Bridge	Subset Sheets:	B36 of 72

Project No./Code
ES6 0852-103
17679
Sheet Number 225

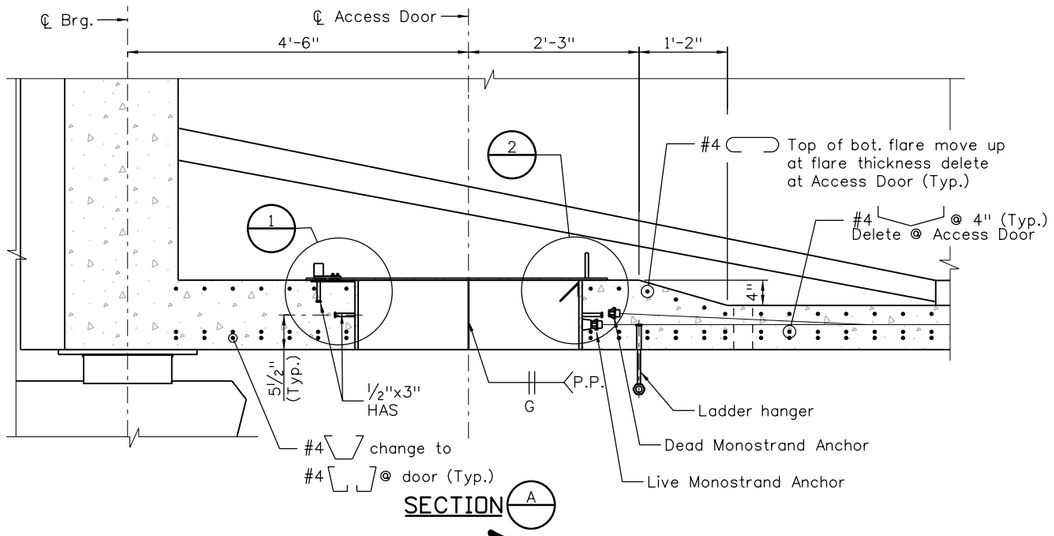

SECTION A

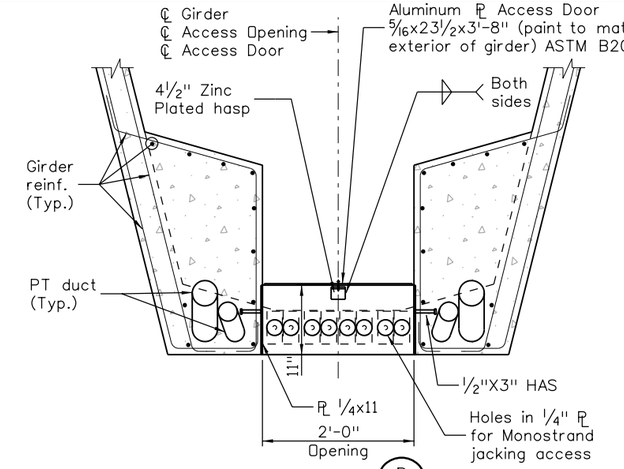

SECTION B

KEYNOTES:

1. Ladder hanger assembly must provide min. safe working load of 500 lbs per concrete anchor.

NOTES:

For dimensions and reinforcing not shown, see Girder details, sheets B31 thru B36.

Cut Girder bottom flange longitudinal bars as needed to clear access hole.

Grind galvanizing from frame, where hasp or hinge attaches, prior to welding. After welding, paint the weld and surrounding areas with zinc rich paint meeting Military Specifications DOD-P-21035A.

Attach door with 4-¼"ø zinc plated bolts with countersunk heads. Use double nuts; burr threads after tightening. Attach hasp staple in a similar manner. Leave door in the open position while pouring the bottom slab.

Paint door with zinc rich paint, meeting the above specification after welding.

Door, galvanized frame, and hardware shall be paid for in Item No. 601, Concrete Class D.

For locations of Access Doors, see Construction Layout on sheets B14 thru B21.

For drain details, see sheet B36.

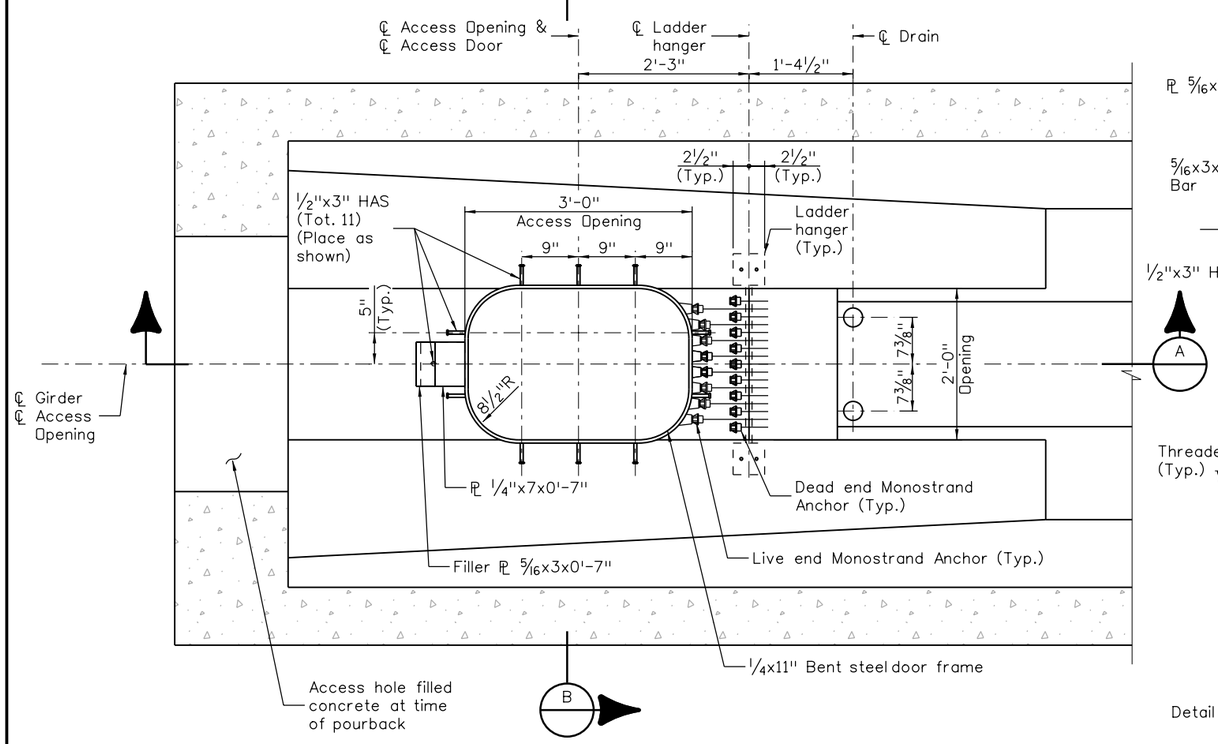

PLAN
(Access Door not shown for clarity)

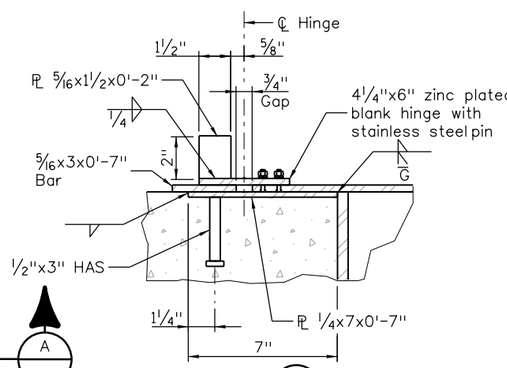

DETAIL 1

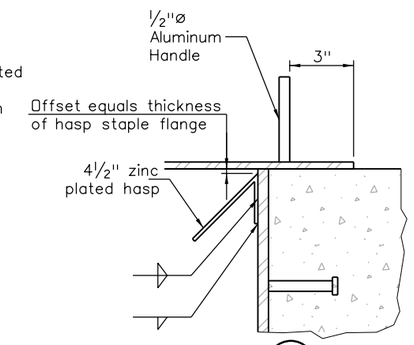

DETAIL 2

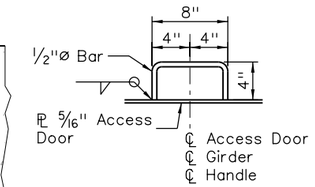

ACCESS DOOR HANDLE DETAIL

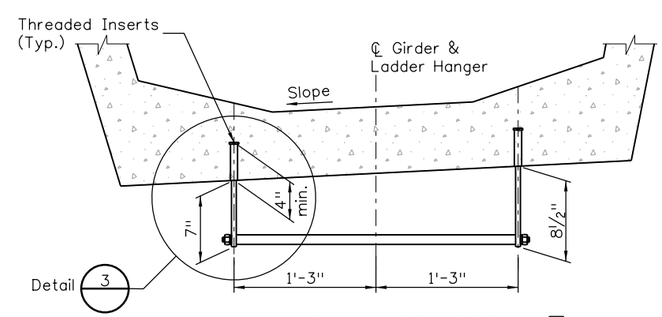

LADDER HANGER DETAIL 1

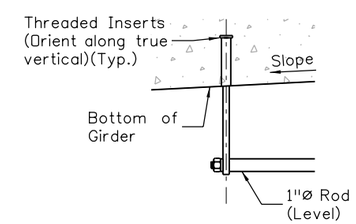

DETAIL 3

Revision Dates (Preliminary Stage Only)	
MM/YY	

Design			Detail			Quantities		
	INITIAL	DATE		INITIAL	DATE		INITIAL	DATE
Designed By	MLM	10/09	Detailed By	DTO	10/09	Quantities By		
Checked By			Checked By	MLM	12/09	Checked By		

18026 1:53:02 PM S:\Tranproj\100002375\14679\Consultants\Bridge\Drawings\14679_pBD-D718.dgn

Print Date: 12/31/2009
File Name: 14679_pBD-D718.dgn
Horiz. Scale: 1:4 Vert. Scale: As Noted

PBSJ 4601 DTC Boulevard Suite 700 Denver, CO 80237

Sheet Revisions		
Date:	Comments	Init.

Colorado Department of Transportation
DOT DEPARTMENT OF TRANSPORTATION
8833 South Wadsworth Court
Littleton, CO 80128
Phone: 303-972-9112 FAX: 303-972-9114
Region 6 RLB

As Constructed
No Revisions:
Revised:
Void:

SB SANTA FE TO EB C470 RAMP
ACCESS DOOR DETAILS

Designer:	M. McMullen	Structure Numbers	F-16-YE
Detailer:	D. Oberosler		
Sheet Subset:	Bridge	Subset Sheets:	B37 of 72

Project No./Code
ES6 0852-103
17679
Sheet Number 226

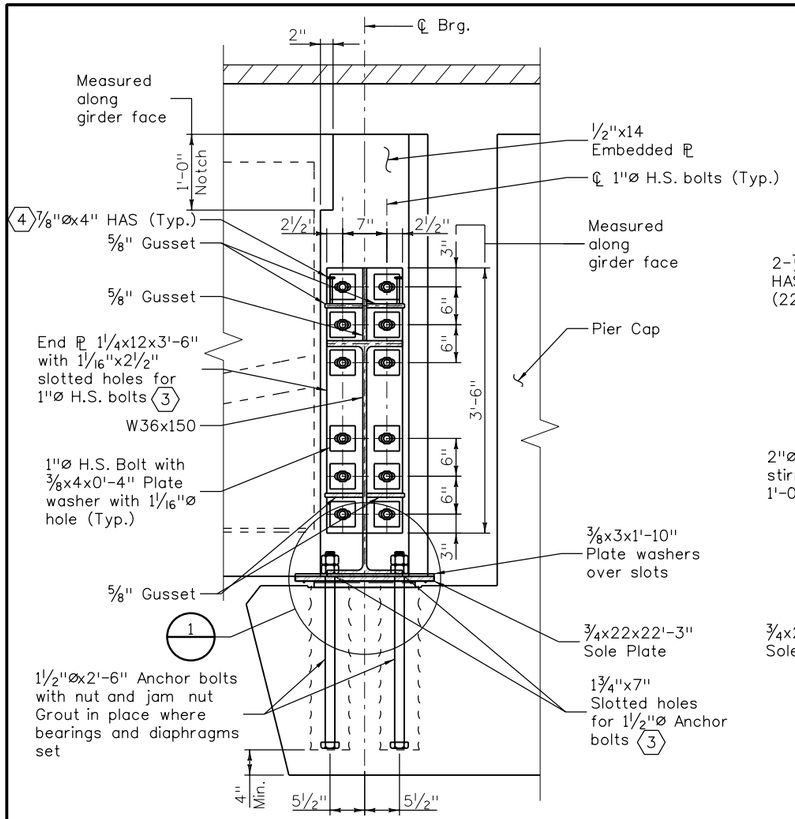

TYPICAL SECTION

(Interior Piers shown, End and Expansion Piers similar)

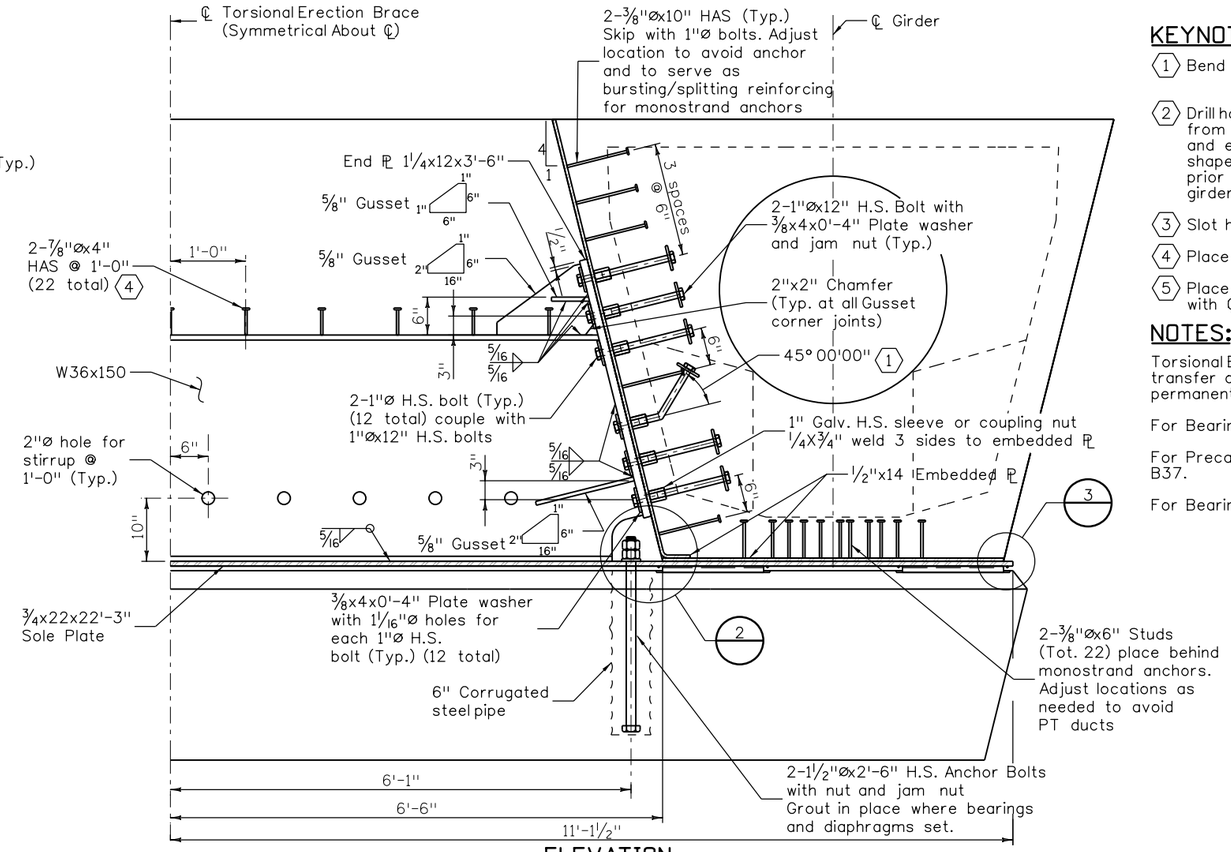

ELEVATION

(Interior Piers shown, End and Expansion Piers similar)
(Girder reinforcing, PT ducts, and monostrands not shown for clairty)

KEYNOTES:

1. Bend bolt up to avoid PT duct.
2. Drill holes in end plate and embedded plates from assembled torsional brace diaphragm and embedded plates, or with a common shape full height template. Trial fit assemblies prior to embedding embedded plates in the girder.
3. Slot holes shall be parallel to Girder.
4. Place studs 1" minimum from W36 flange edge.
5. Place flush with 1 3/4"x7" slots. Center long side with ℄ Bearing.

NOTES:

Torsional Erection Brace shall be installed prior to transfer of erection loads from cranes to the permanent bearings or leveling pads.

For Bearing Device (Type I) details, see sheet B49.

For Precast Tub Girder details, see Sheet B31 thru B37.

For Bearing Seat details, see sheet B30.

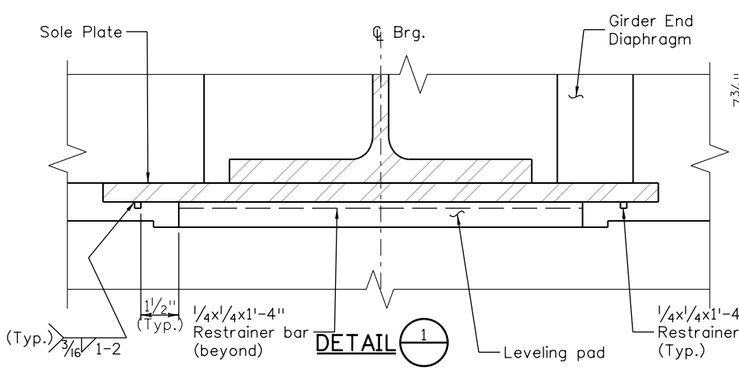

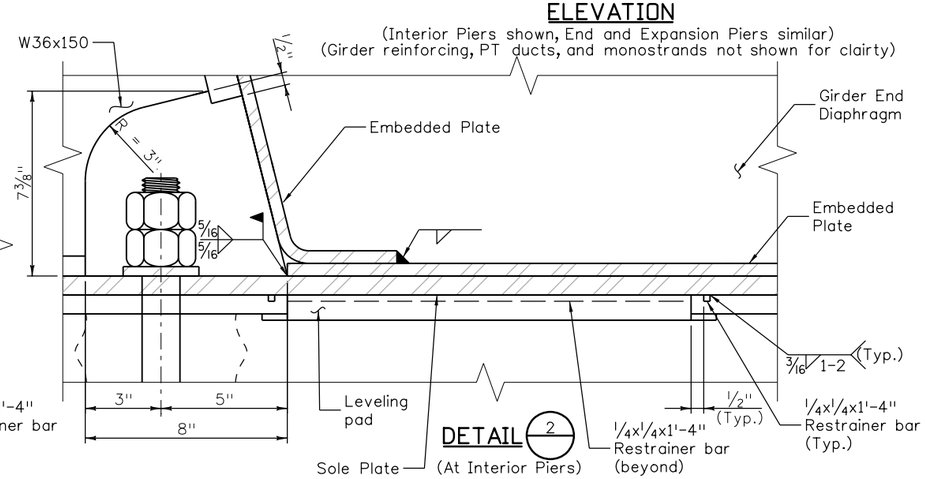

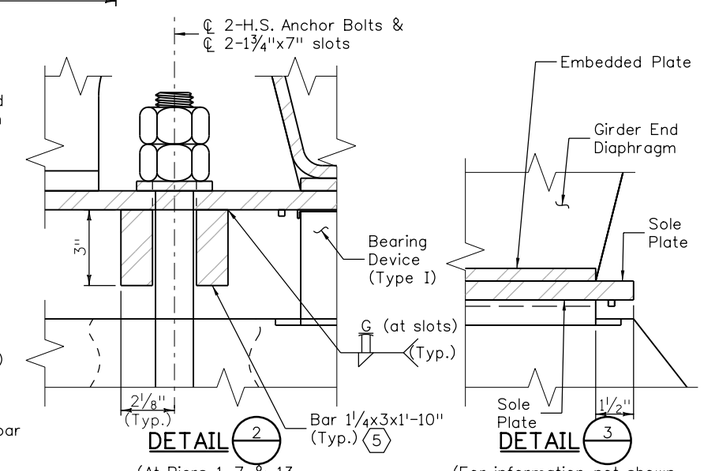

Print Date: 12/31/2009		Sheet Revisions			Colorado Department of Transportation	As Constructed	SB SANTA FE TO EB C470 RAMP TORSIONAL ERECTION BRACE DETAILS		Project No./Code
File Name: 14679_pBD-D719.dgn		Date:	Comments	Init.	8833 South Wadsworth Court Littleton, CO 80128 Phone: 303-972-9112 FAX: 303-972-9114	No Revisions:	Designer: M. McMullen	Structure Numbers: F-16-YE	ES6 0852-103
Horiz. Scale: 1:1 Vert. Scale: As Noted						Revised:	Detailer: E. Schawo		17679
Staff Bridge Branch - Unit 0224 Unit Leader: MH					Region 6 RLB	Void:	Sheet Subset: Bridge	Subset Sheets: B38 of 72	Sheet Number 227
PBSJ 4601 DTC Boulevard Suite 700 Denver, CO 80237									

Quantities: Initial / Date
Revision Dates (Preliminary Stage Only): MM/YY
Detail: Initial / Date — Detailed By: GE 10/09; Checked By: MLM 12/09; Quantities By; Checked By
Design: Initial / Date — Designed By: MLM 10/09; Checked By

18026 1:53:05 PM S:\Tranproj\100002375\14679\Consultants\Bridge\Drawings\14679_pBD-D719.dgn

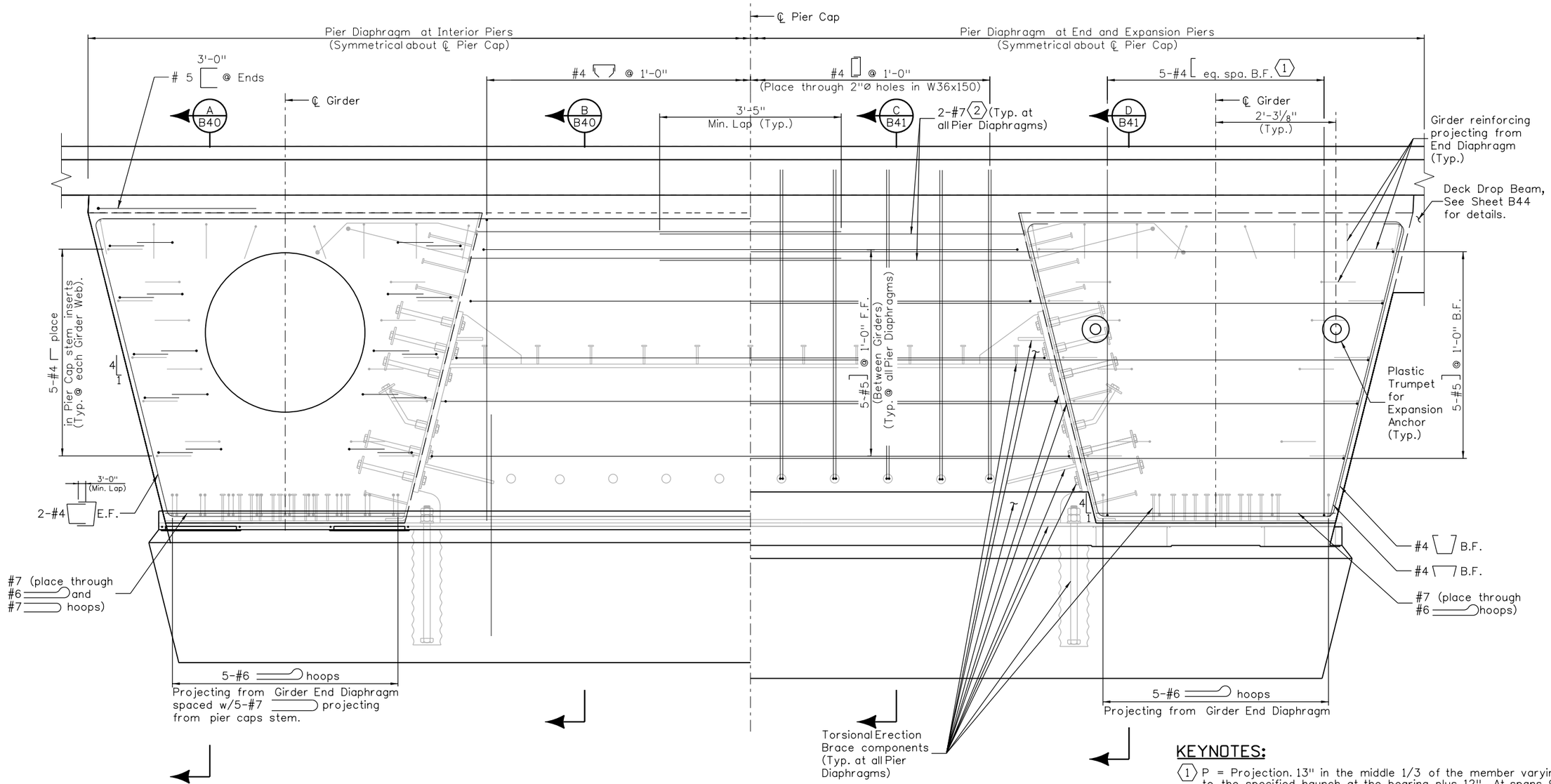

ELEVATION

KEYNOTES:

1. P = Projection. 13" in the middle 1/3 of the member varying to the specified haunch at the bearing plus 12". At spans 9 and 10 the projection shall be 13" at the end of the members varying to 20" in the middle third. Field bend over the top of deck longitudinal bars.
2. Mechanically couple to #7 bars in Girder End Diaphragm.

NOTES:

For Torsional Erection Brace, see Sheet B38.

For Pier details, see sheets B23 thru B30.

For Girder details, see sheets B31 thru B37.

Quantities	INITIAL	DATE
Detail	INITIAL	DATE
Detailed By	ERS	11/09
Checked By	WLM	12/09
Quantities By		
Checked By		
Design	INITIAL	DATE
Designed By	MLM/KCS	11/09
Checked By		

Revision Dates MM/YY (Preliminary Stage Only)

18026 1:53:09 PM S:\Transproj\1000023775\14679\Consultants\Bridge\Drawings\14679_pBD-D720.dgn

Print Date: 12/31/2009
File Name: 14679_pBD-D720.dgn
Horiz. Scale: 1:1 Vert. Scale: As Noted

PBSJ 4601 DTC Boulevard Suite 700 Denver, CO 80237

Sheet Revisions		
Date:	Comments	Init.

Colorado Department of Transportation
8833 South Wadsworth Court
Littleton, CO 80128
Phone: 303-972-9112 FAX: 303-972-9114
Region 6 RLB

As Constructed
No Revisions:
Revised:
Void:

SB SANTA FE TO EB C470 RAMP
PIER DIAPHRAGM (1 OF 3)

Designer: M. McMullen
Detailer: E. Schawo
Sheet Subset: Bridge
Structure Numbers F-16-YE
Subset Sheets: B39 of 72

Project No./Code
ES6 0852-103
17679
Sheet Number 228

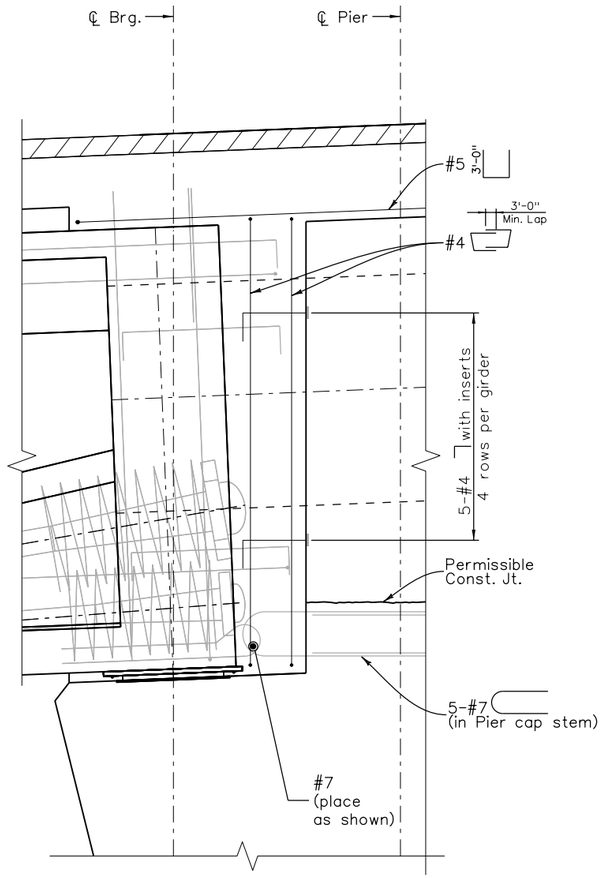

SECTION A B39

(Monostrands and anchors not shown for clarity)
(Reinforcing symmetrical about ℄ Pier)

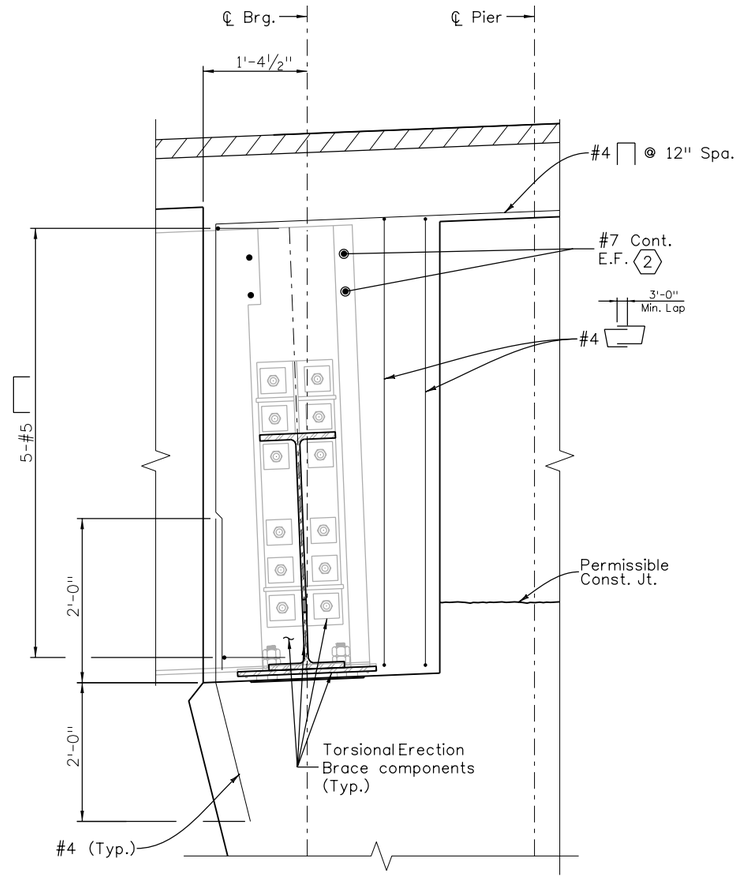

SECTION B B39

(Reinforcing symmetrical about ℄ Pier)

KEYNOTES:

1. Project bar into deck and bend leg below bottom of deck top mat reinforcing.
2. Mechanically couple to #7 bars in Girder End Diaphragm.

NOTES:

For Torsional Erection Brace, see Sheet B38.

Revision Dates	
MM/YY	(Preliminary Stage Only)

Quantities		
	INITIAL	DATE
Quantities By		
Checked By		

Detail		
	INITIAL	DATE
Detailed By	ERS	11/09
Checked By	MLM	12/09

Design		
	INITIAL	DATE
Designed By	KCS	11/09
Checked By		

18026 1:53:12 PM S:\Tranproj\1000002375\14679\Consultants\Bridge\Drawings\14679_pBD-D721.dgn

Print Date: 12/31/2009
File Name: 14679_pBD-D721.dgn
Horiz. Scale: 1:1 Vert. Scale: As Noted

PBSJ 4601 DTC Boulevard Suite 700 Denver, CO 80237

Sheet Revisions		
Date:	Comments	Init.

Colorado Department of Transportation
DOT DEPARTMENT OF TRANSPORTATION
8833 South Wadsworth Court
Littleton, CO 80128
Phone: 303-972-9112 FAX: 303-972-9114
Region 6 RLB

As Constructed
No Revisions:
Revised:
Void:

SB SANTA FE TO EB C470 RAMP
PIER DIAPHRAGM (2 OF 3)

Designer:	K. Saindon	Structure Numbers	F-16-YE
Detailer:	E. Schawo		
Sheet Subset:	Bridge	Subset Sheets: B40 of 72	

Project No./Code
ES6 0852-103
17679
Sheet Number 229

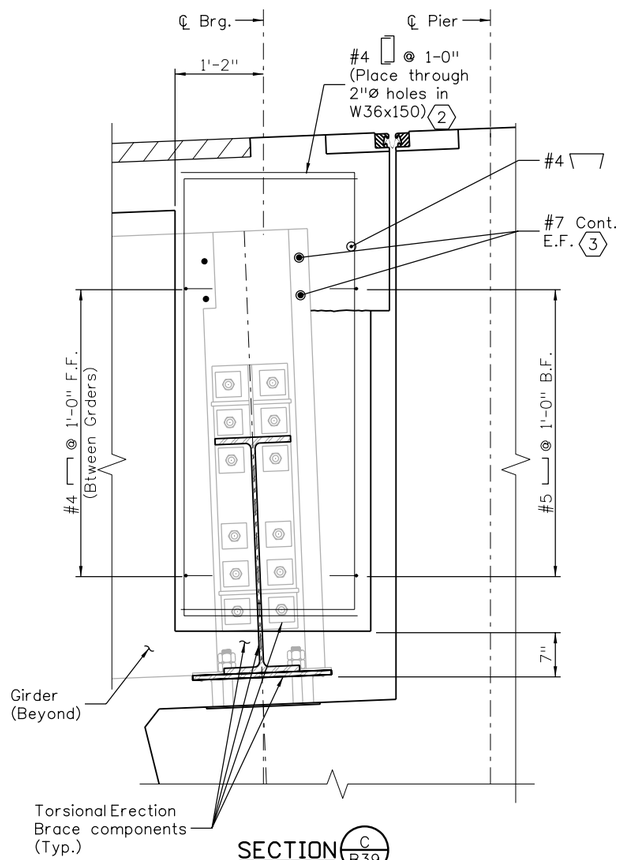

SECTION C B39

(For information not shown, see "Section D")
(Reinforcing symmetrical about ℄ Pier)

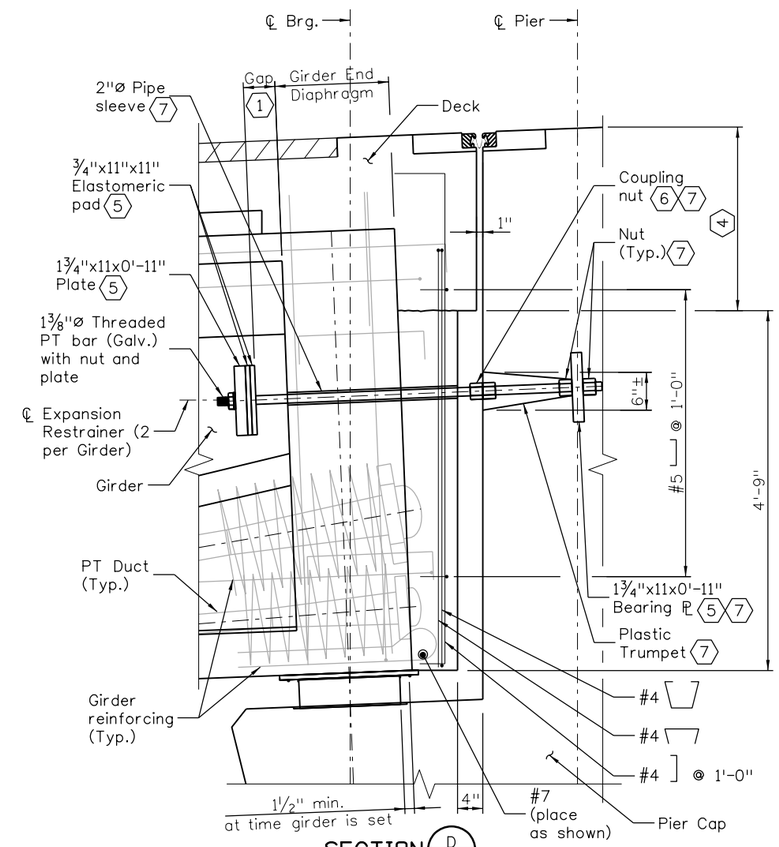

SECTION D B39

(Monostrands and anchors not shown for clarity)
(Reinforcing symmetrical about ℄ Pier)

KEYNOTES:

1. Set gap to match remaining construction capacity. Caulk nut after gap is set.
2. Project bar into deck and bend leg below bottom of deck top mat reinforcing.
3. Mechanically couple to #7 bars in Girder End Diaphragm.
4. Form upper part of gap to 1" @ time of Deck pour.
5. Place a 1⅝"ø hole at center for threaded bar.
6. Coupling nut at ℄ Pier shall be slightly loose to allow for adjustment.
7. Detail for Pier 7 similar except symmetrical about ℄ Pier.

NOTES:

For additional notes, see sheet B39.

Quantities			
	INITIAL	DATE	
Quantities By			
Checked By			

Detail			
	INITIAL	DATE	
Detailed By	ERS	11/09	Quantities By
Checked By	WLM	12/09	Checked By

Design			
	INITIAL	DATE	
Designed By	MLM	11/09	Detailed By
Checked By			Checked By

Revision Dates	
MM/YY	

(Preliminary Stage Only)

18026 1:53:14 PM S:\Tranpro\100002375\14679\Consultants\Bridge\Drawings\14679_pBD-D722.dgn

Print Date: 12/31/2009
File Name: 14679_pBD-D722.dgn
Horiz. Scale: 1:1 Vert. Scale: As Noted

PBSJ 4601 DTC Boulevard Suite 700 Denver, CO 80237

Sheet Revisions		
Date:	Comments	Init.

Colorado Department of Transportation
8833 South Wadsworth Court
Littleton, CO 80128
Phone: 303-972-9112 FAX: 303-972-9114
Region 6 RLB

As Constructed
No Revisions:
Revised:
Void:

SB SANTA FE TO EB C470 RAMP
PIER DIAPHRAGM (3 OF 3)

Designer:	M. McMullen	Structure Numbers	F-16-YE
Detailer:	E. Schawo		
Sheet Subset:	Bridge	Subset Sheets: B41 of 72	

Project No./Code
ES6 0852-103
17679
Sheet Number 230

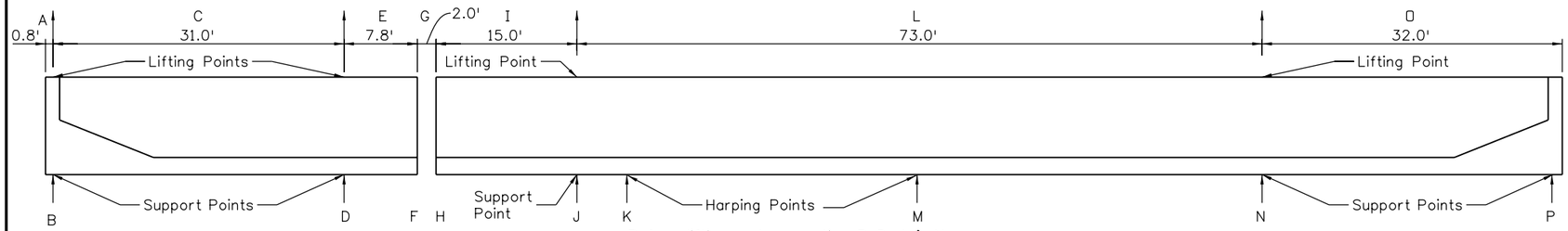

Before lifting and supporting B, D, J, & N
(Cast bottom flange and webs)

PT STAGE 1

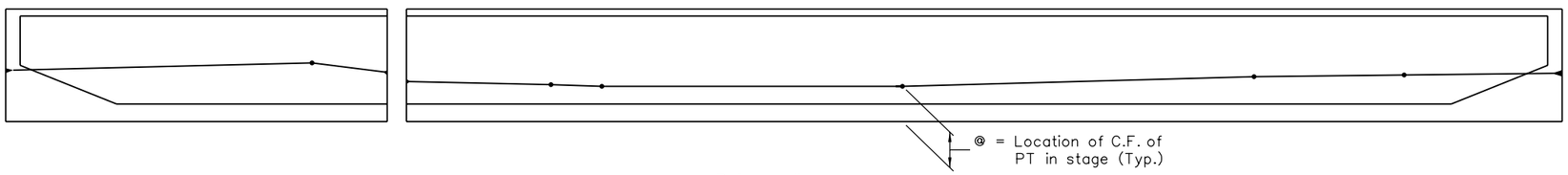

Before splice
(Cast top flange)

PT STAGE 2

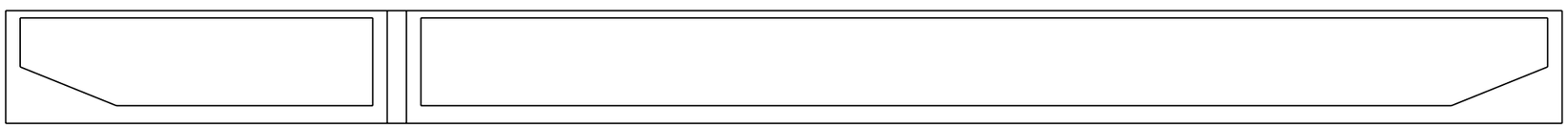

Before lifting (or removing supports B & J)

PT STAGE 3

(Bonded tendons in bottom slab)
Before shifting support to bearing

PT STAGE 4

(Other support points, splice locations, and PT amounts will also work)

EXAMPLE PT STAGING

	A	B	@	C	D	@	E	F	@	G	H	@	I	J	@	K	@	L	M	@	N	@	O	P	@
Stage 1	0.8'	0K	-	31.0'	0K	-	7.8'	0K	-	2.0'	248K	42.5"	15.0'	248K	17.3"	248K	10.7"	73.0'	248K	10.7"	248K	58.0"	32.0'	248K	38.0"
Stage 1a	-	62K	18.0"	-	62K	19.5"	-	62K	7.5"	-	0K	-	-	0K	-	0K	-	-	0K	-	0K	-	-	0K	-
Stage 2	-	992K	32.0"	-	992K	36.5"	-	992K	30.7"	-	806K	25.0"	-	806K	23.0"	806K	22.0"	-	806K	22.0"	806K	28.0"	-	806K	30.0"
Stage 2a	-	-	-	-	-	-	-	-	-	-	-	-	-	-	-	-	-	-	-	-	-	-	-	-	-
Stage3	-	720K	45.0"	-	720K	49.5"	-	720K	43.5"	-	720K	43.5"	-	720K	32.0"	720K	29.0"	-	720K	29.0"	720K	49.3"	-	720K	45.0"
Stage 3a	-	2724K	19.2"	-	2724K	4.6"	-	2724K	4.6"	-	2724K	4.6"	-	2724K	4.6"	2724K	4.6"	-	2724K	4.6"	2724K	4.6"	-	2724K	19.2"
Stage 4	-	-496K	63.0"	-	-496K	64.0"	-	-496K	61.0"	-	-496K	61.0"	-	-496K	64.0"	-496K	64.0"	-	-496K	64.0"	-496K	64.0"	-	-496K	63.0"
Stage 4a	-	372K	6.4"	-	372K	2.4"	-	372K	2.4"	-	372K	2.4"	-	372K	2.4"	372K	2.4"	-	372K	2.4"	372K	2.4"	-	372K	6.4"

SEQUENCE OF STAGES

Cast Bottom flange and webs.

PT Stage 1 before lifting.
Lift to storage location for lid (girder top flange) pour using lifting and support points B, D, J, & N.

PT Stage 1a before lid pour.
Cast lid.

PT stage 2, the remaining web and top flange monostrand that are dead ended at the splice and live ended at the girder ends.
Optional shipping stage.
Cast splice. There is an opportunity to change support elevations just before this PT in order to make small camber changes to the girder.

PT Stage 2a is not used in this particular example, but provides a stage for detensioning any temporary strands not needed for future stages.

PT stage 3, the monostrands in the webs that are live ended at the splice and dead ended at the girder ends.
Optional shipping stage.

PT Stage 3a is the tensioning and grouting of the bonded tendons.
Optional shipping stage.
Erect the girders transferring the support to the girder ends after connecting torsional brace.

PT Stage 4 detension the top monostrands.

PT Stage 4a tension bottom flange monostrands.

STRESSING SEQUENCE:

Tendons may be jacked from both ends, either simultaneously or sequentially, or ½ the tendons may be jacked from each end. If ½ the tendons are jacked from each end, the jacking force shall be increased 0 KIPS. If jacking force or steel area is greater than assumed in the design, prestressing quantities shall not be adjusted.

No more than ½ of the prestressing force in any web may be stressed before an equal force is stressed in the adjacent web. At no time during the stressing operations will more than ½ of the total prestressing force in the stage be applied eccentrically about the centerline of the structure.

At the Contractor's option, the prestressing force may vary ±5% from the theoretical force per web provided the total P(JACK) force is obtained and is distributed symmetrically about the centerline of the typical section. P(JACK) is the sum of the jack forces reached during jacking in each tendon.

NOTES:

The contractor is responsible for sequencing and timing the work in such a way that girder cambers are not adversely affected beyond the allowed tolerance. In particular, the lid pour should be done in such a way that differential strains due to flexural and PT stresses, differential shrinkage, and differential temperatures are not locked into the girder in such a way that they significantly adversely affect the girder camber.

Partial tensioning may be applied prior to achieving the specified release strength, and construction loads from handling may be applied, provided that the concrete strength at the time of tensioning or application of construction loads is at least 4000 psi, the anchors utilized are capable of tensioning at the lower strength, any compressive stresses are less than 0.6 x the actual concrete strength, and any tensile stresses are less than 250 psi/ (tensile zone depth (in.))$^{0.25}$.

This tensile limit may be doubled if bonded reinforcement is provided in the tensile zone, well distributed (i.e. spaced at no greater than 6") within the tensile zone, and acting at a reinforcing stress of no greater than .6 fy or 36 ksi, whichever is less. This will normally require tensioning for handling segments longer than 40 ft. length.

Girders shall be lifted and supported from their roll centers which lie on a line through the CG of the girder. (Usually the CG is offset from a chord through the centers of the ends by approximately 2/3 of the curved girder sweep.)

For Torsional Erection Brace details, see Sheet B38.

Revision Dates (Preliminary Stage Only)

Quantities	INITIAL	DATE
Quantities By		
Checked By		

Detail	INITIAL	DATE
Detailed By	GE	11/09
Checked By	MLM	12/09

Design	INITIAL	DATE
Designed By	MLM	11/09
Checked By		

18026 1:53:17 PM S:\Tranproj\10000002375\14679\Consultants\Bridge\Drawings\14679_pBD-D723.dgn

Print Date: 12/31/2009
File Name: 14679_pBD-D723.dgn
Horiz. Scale: 1:1 Vert. Scale: As Noted
Staff Bridge Branch - Unit 0224 Unit Leader: MH

PBSJ 4601 DTC Boulevard Suite 700 Denver, CO 80237

Sheet Revisions		
Date:	Comments	Init.

Colorado Department of Transportation
DOT DEPARTMENT OF TRANSPORTATION
8833 South Wadsworth Court
Littleton, CO 80128
Phone: 303-972-9112 FAX: 303-972-9114
Region 6 RLB

As Constructed
No Revisions:
Revised:
Void:

SB SANTA FE TO EB C470 RAMP
ERECTION SCHEMATIC AND NOTES
(1 OF 2)

Designer: M. McMullen
Detailer: G. Espanto
Sheet Subset: Bridge
Structure Numbers: F-16-YE
Subset Sheets: B42 of 72

Project No./Code
ES6 0852-103
17679
Sheet Number 231

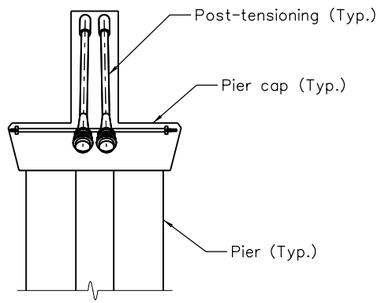

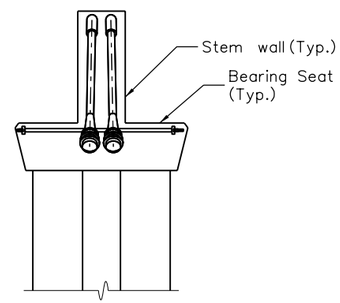

PHASE 1

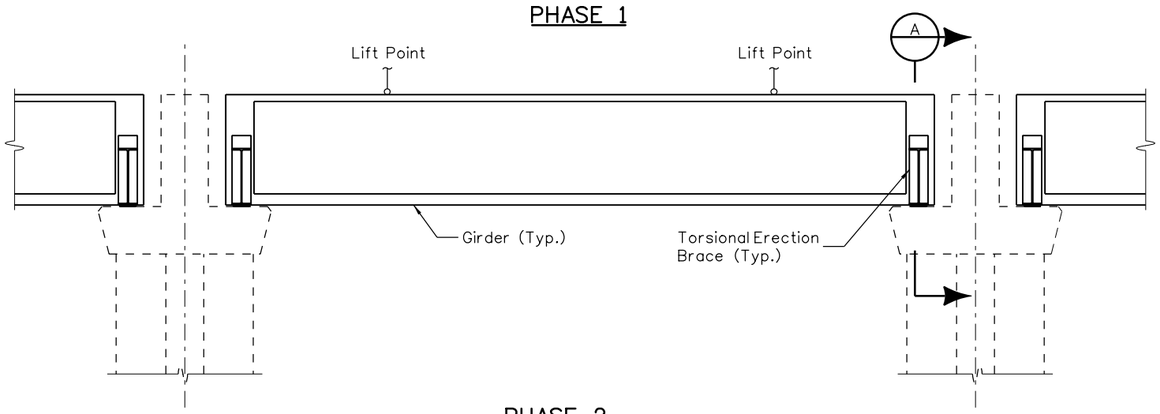

PHASE 2

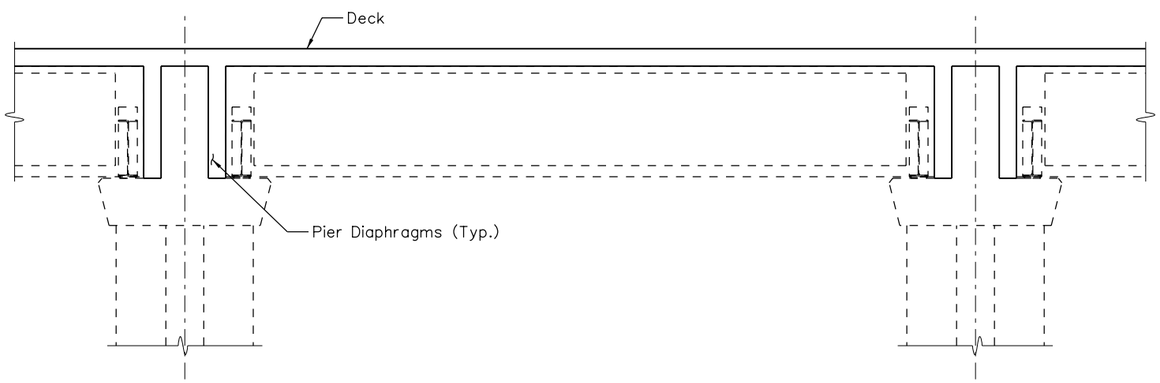

PHASE 3

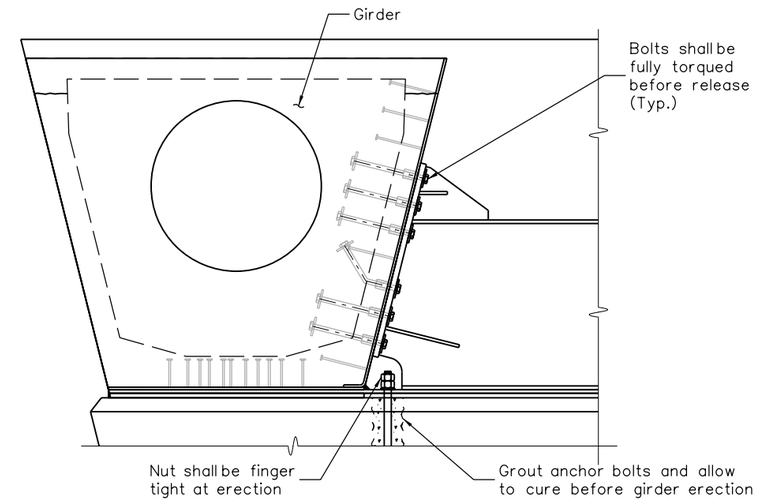

SECTION A

PHASE 1:

1. Pour columns and pier caps.
2. Post-tension and grout piers.
3. Stain bearing seats and stem walls of Pier Caps 1, 7, and 13.

PHASE 2:

1. Splice girders at-grade; post-tension and grout.
2. Install torsional erection braces on pier caps; install anchor bolts and grout; allow grout to cure; install anchor bolts nuts to finger-tight condition to allow for longitudinal erection tolerance.
3. Refer to General Notes for minimum age at erection.Set girder on pier; without releasing crane, bolt girder to torsional erection brace at both ends. When all bolts are fully torqued, release crane.
4. Repeat step 3 for adjacent girder.
5. Install span diaphragms between girders.
6. Weld girder base plates to sole plates.
7. Repeat 3, 4, 5, and 6 for complete unit.

PHASE 3:

1. Form & reinforce Pier diaphragms.
2. Form & reinforce deck.
3. Refer to General Notes for minimum duration between deck pour and girder post-tensioning. Pour deck and diaphragms in accordance with deck placement sequence.

PHASE 4:

1. Complete miscellaneous items such as barriers, fencing, etc.
2. Refer to General Notes for minimum age of deck concrete before installing expansion joints. Install expansion joints.

NOTES:

1. The bridge is designed for the erection scheme and sequence shown on these plans. The method is shown as a schematic illustration that is not complete in all details. The contractor shall design and provide all temporary works, equipments and rigging necessary to build the bridge. The selected erection scheme must be in accordance with the project plans and specifications.
2. The contractor is solely responsible for:
   i) Safety, stability, and serviceability of the bridge during construction.
   ii) Camber and deflection control during construction
   iii) All erection details' design, fabrication, function and removal of all erection equipments and temporary works
3. The bridge shall be built so as to conform to the geometry shown on the plans. Contractor is responsible for all special procedures and quality control necessary to achieve the plan geometry.
4. The pier cap/column interface of piers 2, 3, 11, and 12 has been designed to behave as a hinge. The Contractor shall verify that the loads applied to these piers during construction, in accordance with Contractor's proposed means and methods, are within allowable limits of the hinge capacity provided in the plans.
5. The Contractor shall verify that the loads applied to the torsional erection brace during construction, in accordance with Contractor's proposed means and methods, are within allowable limits.
6. The contractor shall develop and document his proposed means and methods of construction and submit them to the Engineer for review. This shall include details of the construction sequence as well as supporting calculations showing the influence of the selected sequence, loads, and details upon the structure.

Revision Dates (Preliminary Stage Only)

Quantities		
	INITIAL	DATE
Quantities By		
Checked By		

Detail		
	INITIAL	DATE
Detailed By	GE	10/09
Checked By	KCS	12/09

Design		
	INITIAL	DATE
Designed By	MLM	10/09
Checked By		

18026 1:53:19 PM S:\Tranproj\100002375\14679\Consultants\Bridge\Drawings\14679_pBD-D724.dgn

Print Date: 12/31/2009
File Name: 14679_pBD-D724.dgn
Horiz. Scale: 1:1 Vert. Scale: As Noted
Staff Bridge Branch - Unit 0224 Unit Leader: MH

PBSJ 4601 DTC Boulevard Suite 700 Denver, CO 80237

Sheet Revisions		
Date:	Comments	Init.

Colorado Department of Transportation
DOT DEPARTMENT OF TRANSPORTATION
8833 South Wadsworth Court
Littleton, CO 80128
Phone: 303-972-9112 FAX: 303-972-9114
Region 6 RLB

As Constructed
No Revisions:
Revised:
Void:

SB SANTA FE TO EB C470 RAMP ERECTION SCHEMATIC AND NOTES (2 OF 2)

Designer:	K. Saindon	Structure Numbers	F-16-YE
Detailer:	G. Espanto		
Sheet Subset:	Bridge	Subset Sheets: B43 of 72	

Project No./Code
ES6 0852-103
17679
Sheet Number 232

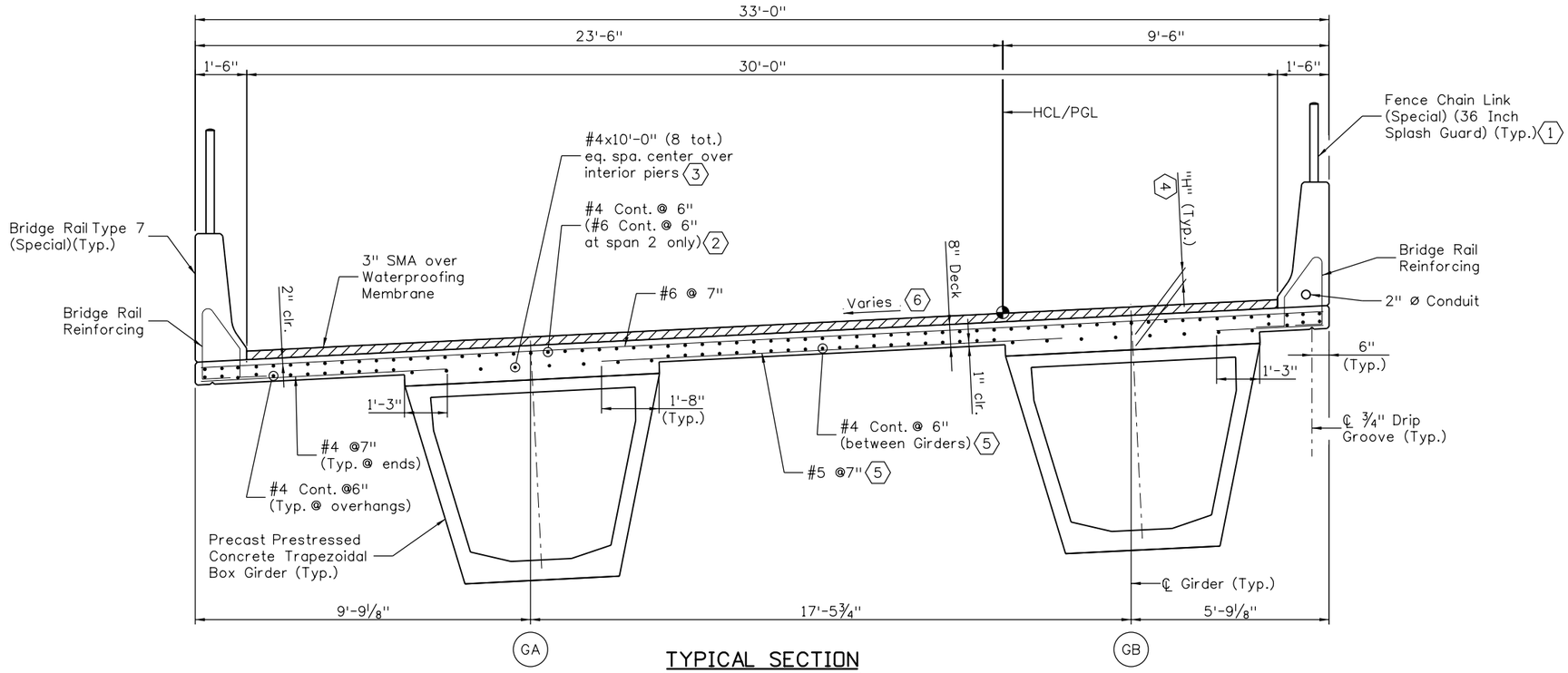

TYPICAL SECTION

(LOOKING AHEAD STATION)

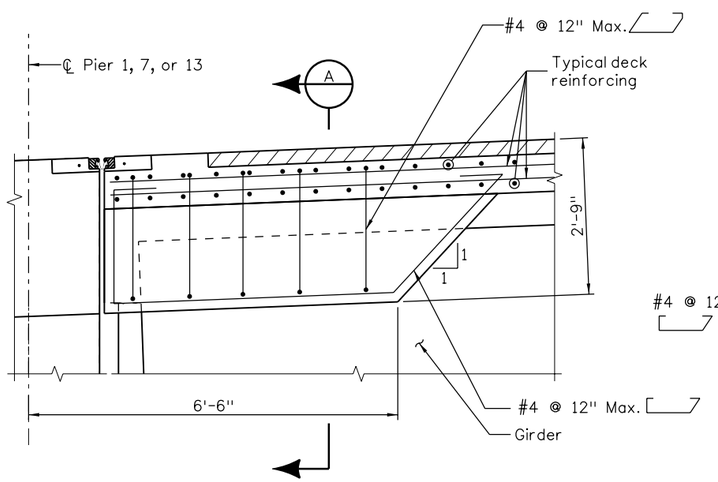

DECK DROP BEAM DETAIL

(Pier 1 shown; Pier 13 similar, but opposite hand;
Pier 7 similar, but symmetrical about ℄ Pier)
(Bridge Rail not shown for clarity)

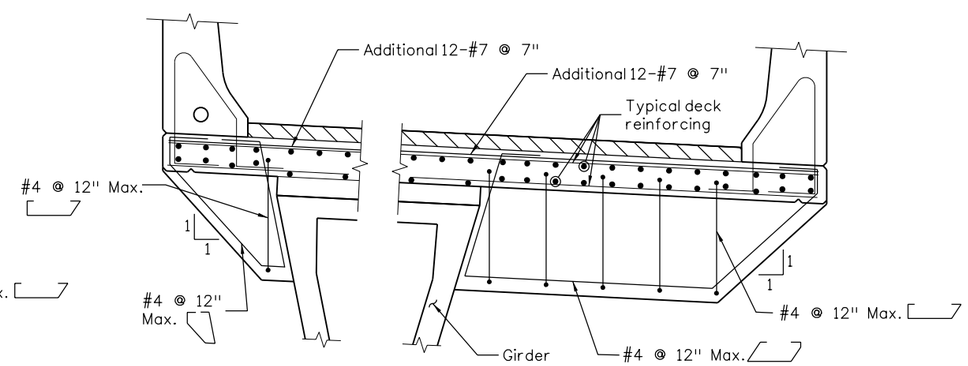

SECTION A

KEYNOTES:

1. Fence Chain Link (Special) (78 inch) at Pier 9. For more information, see sheets B7, B8, and B55.
2. For Reinforcing at piers, see sheet B45.
3. #5x15'-0" (12 tot.) eq. spa. if precast panel deck forms are used.
4. Dimension "H" is taken at ℄ Girder and ℄ Brg., see sheet B31 for value.
5. Omit if Precast Panel Deck Forms are used.
6. See Cross Slope Diagram on Sheet B9 for more information.

NOTES:

Concrete shall be Concrete Class D (Bridge).

For Bridge Rail Type 7 (Special) details, see sheets B52 & B53.

For Girder details, see sheets B31 thru B37.

For optional Precast Panel Deck Form details, see sheets B46 & B47.

For Fence Chain Link (Special) (36 Inch Splash Guard), see sheet B54.

Revision Dates	MM/YY
(Preliminary Stage Only)	

Design	INITIAL	DATE
Designed By	KCS	09/09
Checked By		

Detail	INITIAL	DATE
Detailed By	ERS	09/09
Checked By	MLM	12/09

Quantities	INITIAL	DATE
Quantities By		
Checked By		

18026 1:53:22 PM S:\Tranproj\100002375\14679\Consultants\Bridge\Drawings\14679_pBD-D725.dgn

Print Date: 12/31/2009
File Name: 14679_pBD-D725.dgn
Horiz. Scale: 1:4 Vert. Scale: As Noted
Staff Bridge Branch - Unit 0224 Unit Leader: MH

PBSJ 4601 DTC Boulevard Suite 700 Denver, CO 80237

Sheet Revisions		
Date:	Comments	Init.

Colorado Department of Transportation
DOT DEPARTMENT OF TRANSPORTATION
8833 South Wadsworth Court
Littleton, CO 80128
Phone: 303-972-9112 FAX: 303-972-9114
Region 6 RLB

As Constructed
No Revisions:
Revised:
Void:

SB SANTA FE TO EB C470 RAMP
TYPICAL DECK REINFORCING

Designer: K. Saindon
Detailer: E. Schawo
Sheet Subset: Bridge
Structure Numbers F-16-YE
Subset Sheets: B44 of 72

Project No./Code
ES6 0852-103
17679
Sheet Number 233

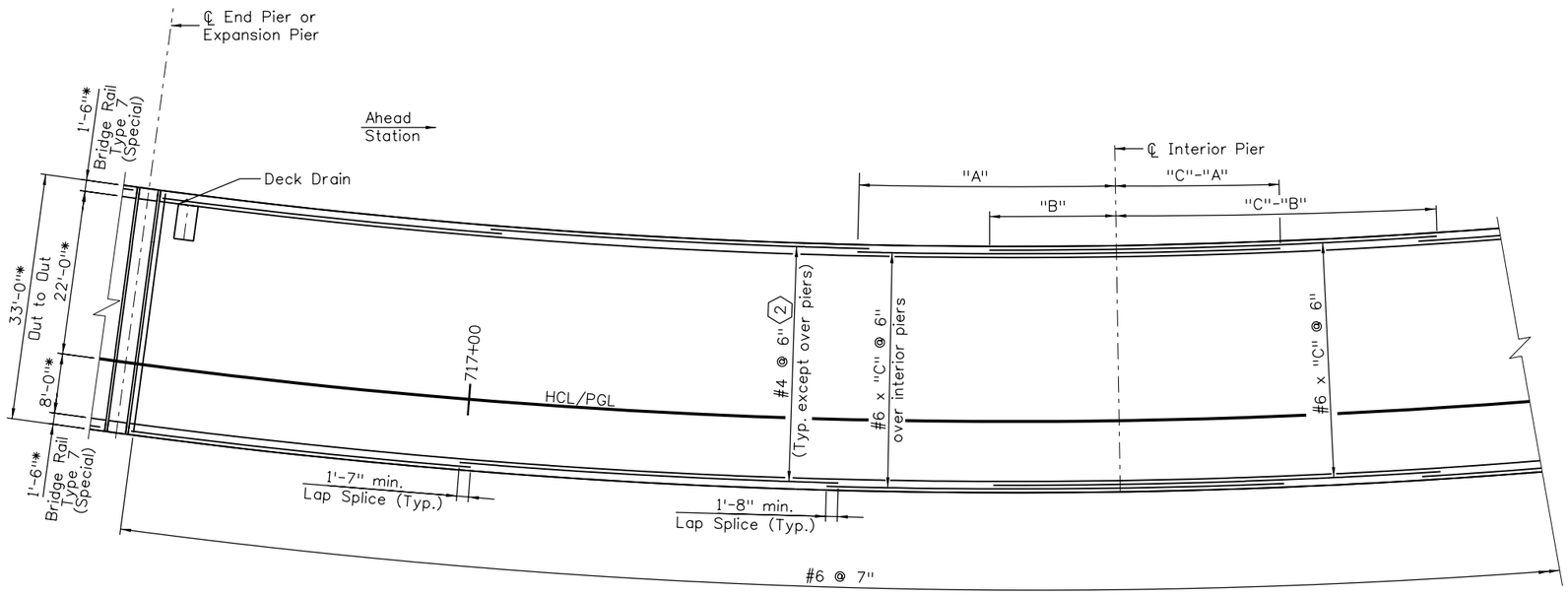

PARTIAL DECK PLAN

TOP REINFORCING

(BRIDGE RAIL AND DECK DRAIN REINFORCING NOT SHOWN FOR CLARITY)

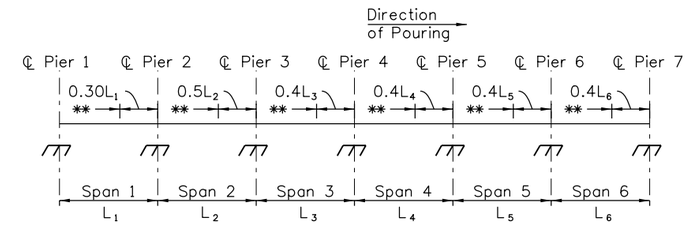

UNIT 1

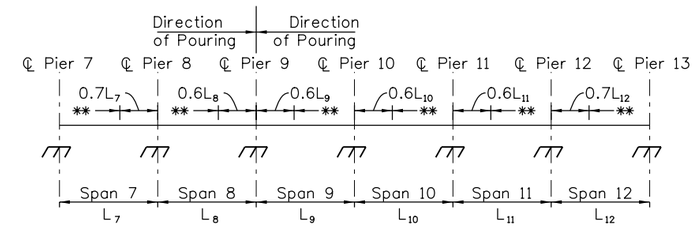

UNIT 2

DECK POURING SEQUENCE

**=Optional Const. Jt.

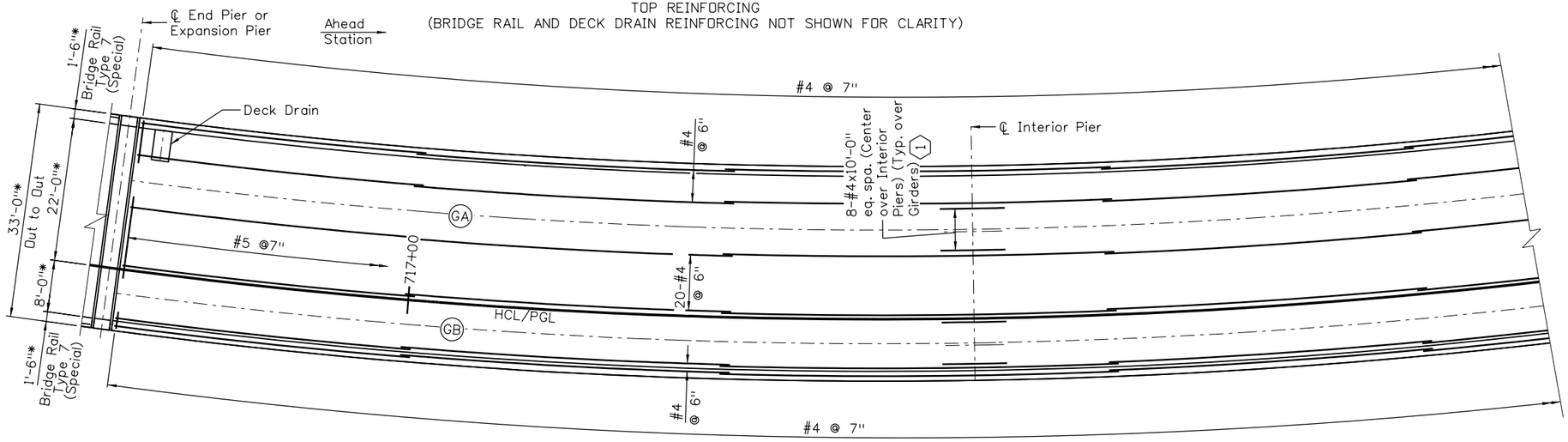

PARTIAL DECK PLAN

BOTTOM REINFORCING

(BRIDGE RAIL AND DECK DRAIN REINFORCING NOT SHOWN FOR CLARITY)

DIMENSION TABLE			
LOCATION	A	B	C
PIER 2	38'	17'	60'
PIER 3	32'	8'	40'
PIER 4	37'	27'	60'
PIER 5	39'	22'	60'
PIER 6	40'	23'	60'
PIER 8	38'	21'	60'
PIER 9	39'	21'	60'
PIER 10	39'	21'	60'
PIER 11	40'	19'	60'
PIER 12	29'	11'	40'

KEYNOTES:

1. 12-#5x15'-0" if Precast Panel Deck Forms are used.
2. Bars shall be #6 @ 6" at span 2.

NOTES:

For Deck Drain details, see sheets B57 thru B59.

* Indicates radial dimension.

Design			
Designed By	KCS	09/09	
Checked By			

Detail			
Detailed By	ERS	09/09	
Checked By	MLM	12/09	

Quantities			
Quantities By			
Checked By			

Revision Dates	
MM/YY	

(Preliminary Stage Only)

18026 1:53:30 PM S:\Transproj\100002375\14679\Consultants\Bridge\Drawings\14679_pBD-D726.dgn

Print Date: 12/31/2009			
File Name: 14679_pBD-D726.dgn			
Horiz. Scale: 1:20	Vert. Scale: As Noted		
Staff Bridge Branch - Unit 0224	Unit Leader: MH		

PBSJ 4601 DTC Boulevard Suite 700 Denver, CO 80237

Sheet Revisions		
Date:	Comments	Init.

Colorado Department of Transportation

DOT DEPARTMENT OF TRANSPORTATION

8833 South Wadsworth Court
Littleton, CO 80128
Phone: 303-972-9112 FAX: 303-972-9114

Region 6 RLB

As Constructed

No Revisions:

Revised:

Void:

SB SANTA FE TO EB C470 RAMP DECK REINFORCING PLAN

Designer:	K. Saindon	Structure Numbers	F-16-YE
Detailer:	E. Schawo		
Sheet Subset:	Bridge	Subset Sheets: B45 of 72	

Project No./Code
ES6 0852-103
17679
Sheet Number 234

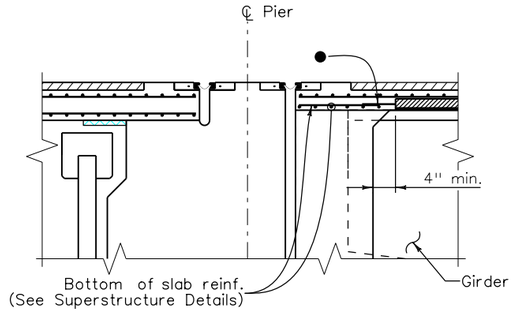

SECTION AT END PIER

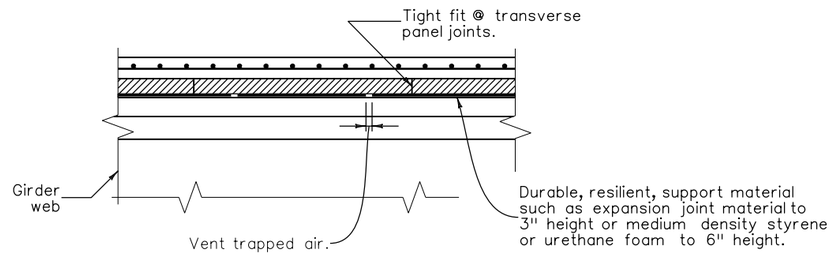

SECTION THRU TRANSVERSE PANEL JOINTS

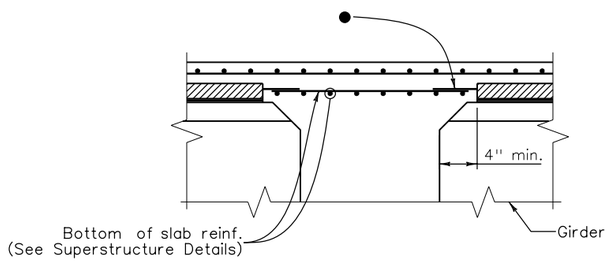

SECTION AT INTERMEDIATE PIER

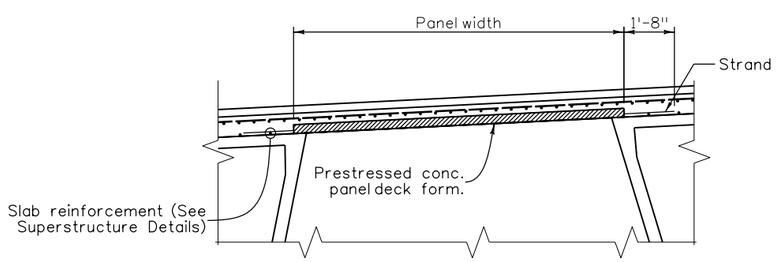

SECTION

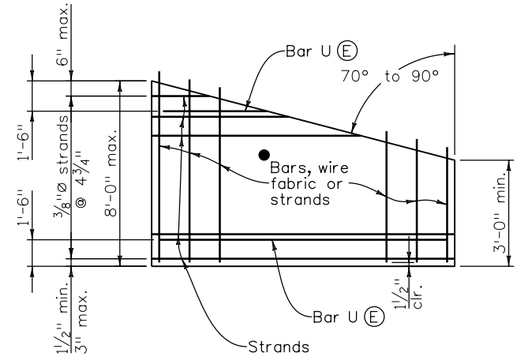

PLAN - SKEWS 70° TO 90° OPTIONAL END PANEL

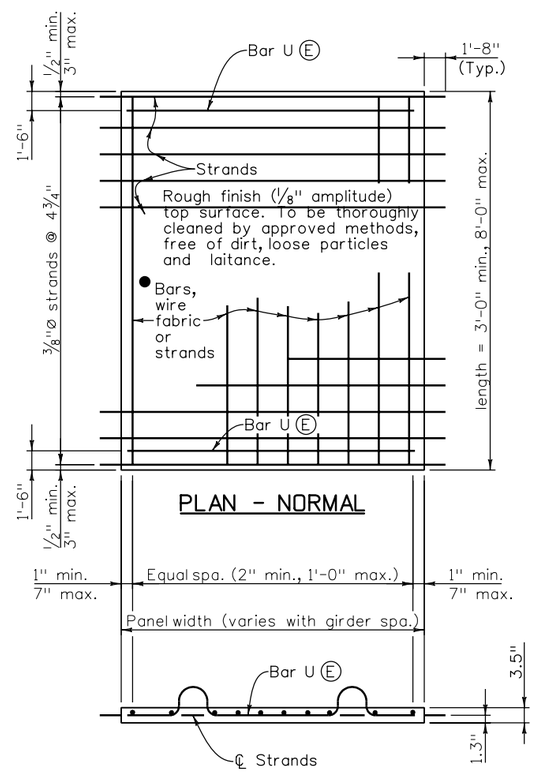

PLAN - NORMAL

PRESTRESSED PANEL DETAILS

NOTES:

Sawing of panels is acceptable in areas where projecting reinforcement is not required. It is desirable to have the prestressing strands project from the panels as long as the projecting strands do not interfere with other bridge components.

● Reinforcing perpendicular to strands may be deformed reinf. bars, welded wire fabric, or welded deformed bar mats, and shall be placed directly above the strands. Minimum area of reinforcing perpendicular to strands shall be 0.11 sq. in. per ft. Tensioned or untensioned strands may also be used. These individual bars or wires shall be no larger than .375" diameter. For location of longitudinal bar extensions, see sheet 2 of 2.

The longitudinal reinforcing steel in the cast-in-place portion of the deck may rest directly on the panels as necessary to obtain clearances at the top of deck, unless otherwise noted.

(E) denotes epoxy coated reinforcing.

The tolerance on strand placement shall not exceed ±1/4".

The tolerance on panel thickness shall not exceed ±1/4".

Concentrated construction loads shall not exceed 500 lb for 3" panels, 700 lb for 3.5" panels, or 1100 lb for 4" panels unless the load is distributed to less than 117 psf.

Total loads applied to any panel during construction shall not exceed 117 psf.

Bottom flexural cracks, sags greater than .5", or cambers greater than .5" will be considered evidence of mishandling, overloading, or exceeding allowable tolerances, and may be cause for rejecting panels at the Engineer's discretion.

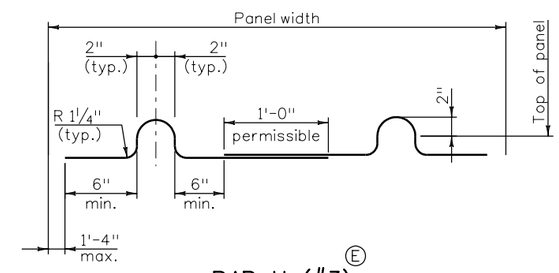

BAR U (#3) (E) PRESTRESSED PANEL DETAILS

Design			Detail			Quantities		
	INITIAL	DATE		INITIAL	DATE		INITIAL	DATE
Designed By	KCS	09/09	Detailed By	DTD	09/09	Quantities By		
Checked By			Checked By	KCS	11/09	Checked By		

Revision Dates (Preliminary Stage Only) 03/07

18026 1:53:33 PM S:\Tranproj\100002375\14679\Consultants\Bridge\Drawings\14679_pBD-D727.dgn

Print Date: 12/31/2009	Sheet Revisions			Colorado Department of Transportation	As Constructed
File Name: 14679_pBD-D727.dgn	Date:	Comments	Init.	8833 South Wadsworth Court Littleton, CO 80128 Phone: 303-972-9112 FAX: 303-972-9114	No Revisions:
Horiz. Scale: 1:1 Vert. Scale: As Noted					Revised:
Staff Bridge Branch - Unit 0224 Unit Leader: MH				Region 6 RLB	Void:
PBSJ 4601 DTC Boulevard Suite 700 Denver, CO 80237					

SB SANTA FE TO EB C470 RAMP OPTIONAL PRECAST PANEL DECK FORM (1 OF 2)			Project No./Code
			ES6 0852-103
Designer: K. Saindon	Structure Numbers	F-16-YE	17679
Detailer: D. Oberosler			
Sheet Subset: Bridge	Subset Sheets: B46 of 72		Sheet Number 235

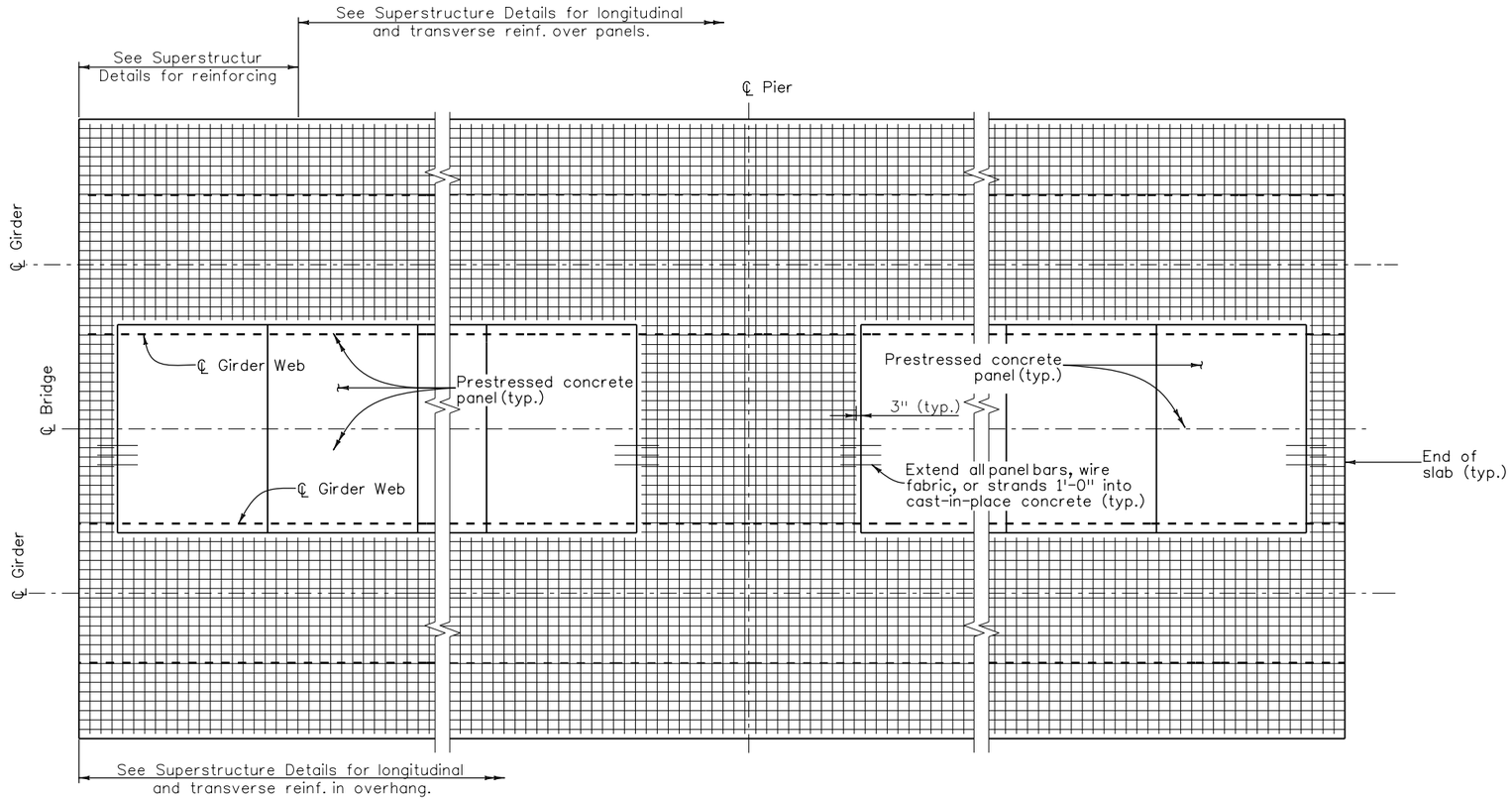

END OF SLAB

CONTINUOUS SLAB OVER PIER

PARTIAL PLAN

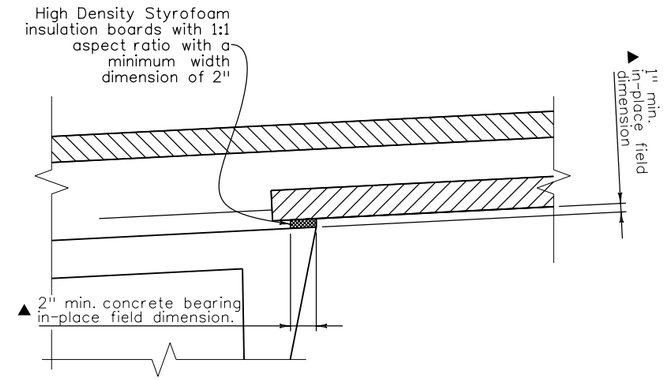

ALTERNATE SUPPORT DETAIL

NOTES:

Composite total slab designed for HS 25-44 and Alternate Military Loading.

All concrete shall be Class PS with release strength f'ci= 4500 psi and minimum 28 day strength f'c= 6000 psi. Entrained air is not required for precast panel deck form concrete. The strength shall be at least 5000 psi at the time of the deck pour.

Use ⅜"Ø low relaxation strands meeting the requirements of ASTM A416 grade 270. Jacking force per strand (F_i) shall be at least 17.2 kips. Final force per strand (F_f) is estimated to be 14.2 kips.

Installation of Bar U (#3) is mandatory. All four Bar U (#3) loops shall be used simultaneously for lifting the panels.

Care must be taken to ensure proper cleaning of construction debris off the tops of the panels and consolidation of concrete mortar under the edges of the panels. Water, dirt or other debris on top of the panels will inhibit the bond of the cast-in-place concrete. It is also important that adequate space (▲ min. 1" x 2") is provided for the concrete to fill the space under the panel as the slab concrete is placed. Panel lengths and width shall be determined by the Contractor and shown on the shop plans.

The Contractor is responsible for the stability of the panels on the girders. Erected panels shall be uniformly supported along the length of the panel. The Contractor is responsible for meeting the total slab thickness shown on the Superstructure Details.

All planes of reinforcing steel shown in the superstructure details are required for areas not formed with precast panels.

The angle and resilient material are shown for illustration and show only one potential method of support. The Contractor is responsible for the selection and design of the panel support and attachment to the girder. Support details shall be shown on the shop plans. Alternate methods for support may be used, provided they are shown on the shop plans and approved by the Engineer.

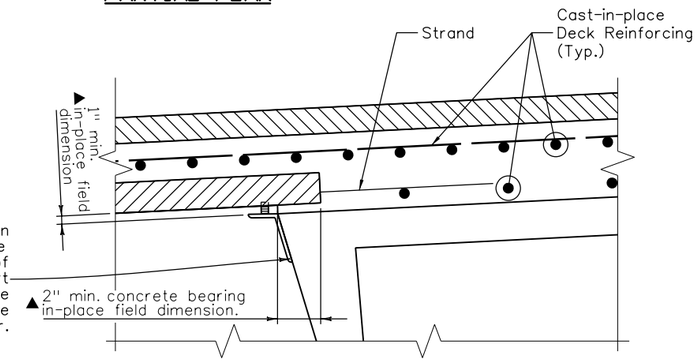

SUPPORT DETAIL

Design			Detail			Quantities		
	INITIAL	DATE		INITIAL	DATE		INITIAL	DATE
Designed By	KCS	09/09	Detailed By	DTD	09/09	Quantities By		
Checked By			Checked By	KCS	11/09	Checked By		

Revision Dates 03/07 (Preliminary Stage Only)

18026 1:53:35 PM S:\Tranproj\100002375\14679\Consultants\Bridge\Drawings\14679_pBD-D728.dgn

Print Date: 12/31/2009
File Name: 14679_pBD-D728.dgn
Horiz. Scale: 1:1 Vert. Scale: As Noted
Staff Bridge Branch - Unit 0224 Unit Leader: MH

PBSJ 4601 DTC Boulevard Suite 700 Denver, CO 80237

Sheet Revisions		
Date:	Comments	Init.

Colorado Department of Transportation
8833 South Wadsworth Court
Littleton, CO 80128
Phone: 303-972-9112 FAX: 303-972-9114
Region 6 RLB

As Constructed
No Revisions:
Revised:
Void:

SB SANTA FE TO EB C470 RAMP OPTIONAL PRECAST PANEL DECK FORM (2 OF 2)

Designer: K. Saindon
Detailer: D. Oberosler
Sheet Subset: Bridge
Structure Numbers: F-16-YE
Subset Sheets: B47 of 72

Project No./Code
ES6 0852-103
17679
Sheet Number 236

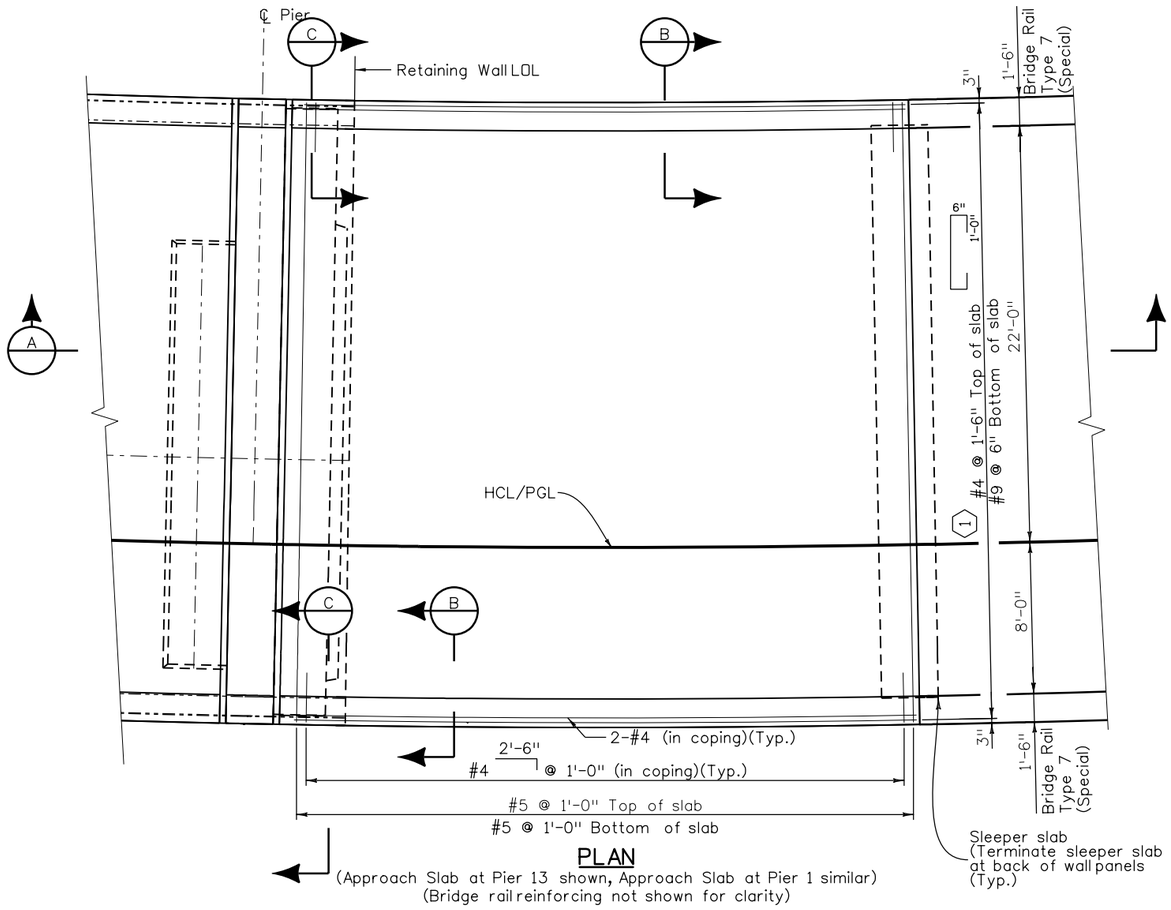

PLAN

(Approach Slab at Pier 13 shown, Approach Slab at Pier 1 similar)
(Bridge rail reinforcing not shown for clarity)

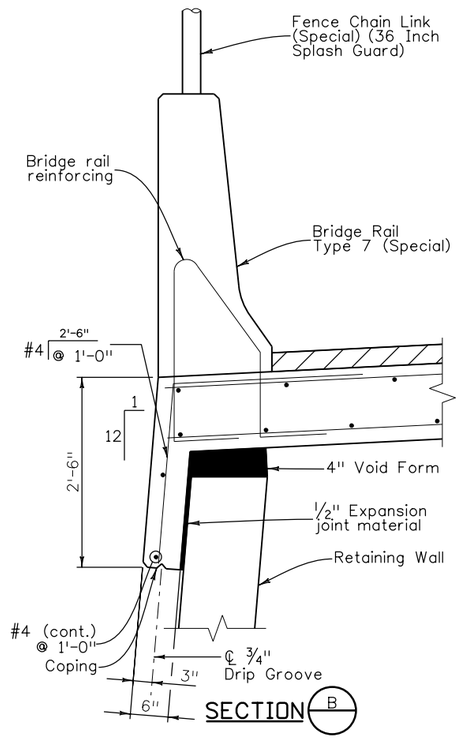

SECTION B

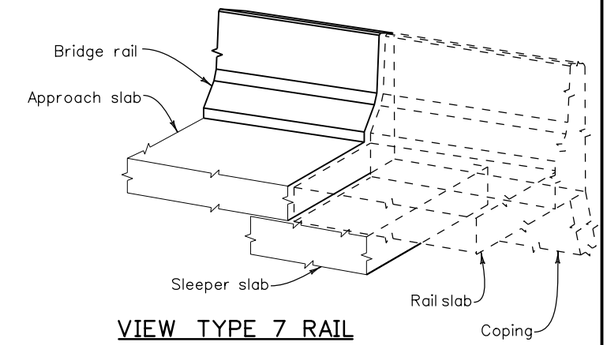

VIEW TYPE 7 RAIL

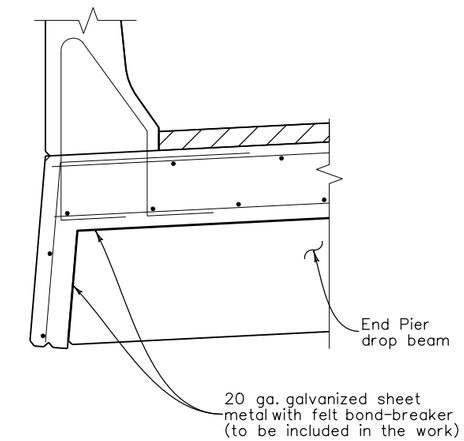

SECTION C

(See "Section B" for infomation not shown)

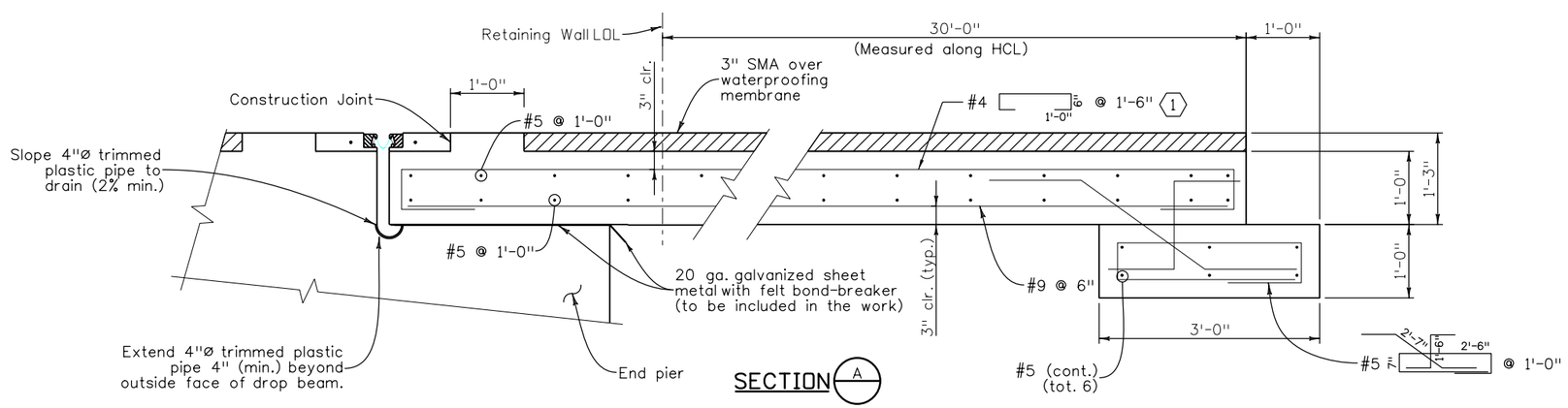

SECTION A

NOTES:

Concrete Class D (Bridge) shall be used for approach slabs.

½" expansion joint material shall meet AASHTO Spec. M213.

For Expansion Joint details, see sheets B50 & B51.

For Bridge Rail Type 7 (Special) details, see sheets B52 & B53.

Approach slab concrete shall be cured in accordance with the Specifications for Bridge Deck Concrete in Subsection 601.

For retaining wall details, see XXX plans.

For end pier details, see sheets B24 & B25.

For Fence Chain Link (Special)(36 inch Splash Guard), see sheet B54.

KEYNOTE:

(1) Contractor may use 1'-0" 6"

Revision Dates	(Preliminary Stage Only)
MM/YY	

Quantities			
	INITIAL	DATE	
Quantities By			
Checked By			

Detail			
	INITIAL	DATE	
Detailed By	ERS	09/09	
Checked By	KCS	11/09	

Design			
	INITIAL	DATE	
Designed By	KCS	09/09	
Checked By			

18026 1:53:43 PM S:\Tranproj\100002375\14679\Consultants\Bridge\Drawings\14679_pBD-D729.dgn

Print Date: 12/31/2009
File Name: 14679_pBD-D729.dgn
Horiz. Scale: 1:1 Vert. Scale: As Noted
Staff Bridge Branch - Unit 0224 Unit Leader: MH

PBSJ 4601 DTC Boulevard Suite 700 Denver, CO 80237

Sheet Revisions		
Date:	Comments	Init.

Colorado Department of Transportation
DOT DEPARTMENT OF TRANSPORTATION
8833 South Wadsworth Court
Littleton, CO 80128
Phone: 303-972-9112 FAX: 303-972-9114
Region 6 RLB

As Constructed
No Revisions:
Revised:
Void:

SB SANTA FE TO EB C470 RAMP APPROACH SLAB DETAILS

Designer:	K. Saindon	Structure Numbers	F-16-YE
Detailer:	E. Schawo		
Sheet Subset:	Bridge	Subset Sheets: B48 of 72	

Project No./Code
ES6 0852-103
17679
Sheet Number 237

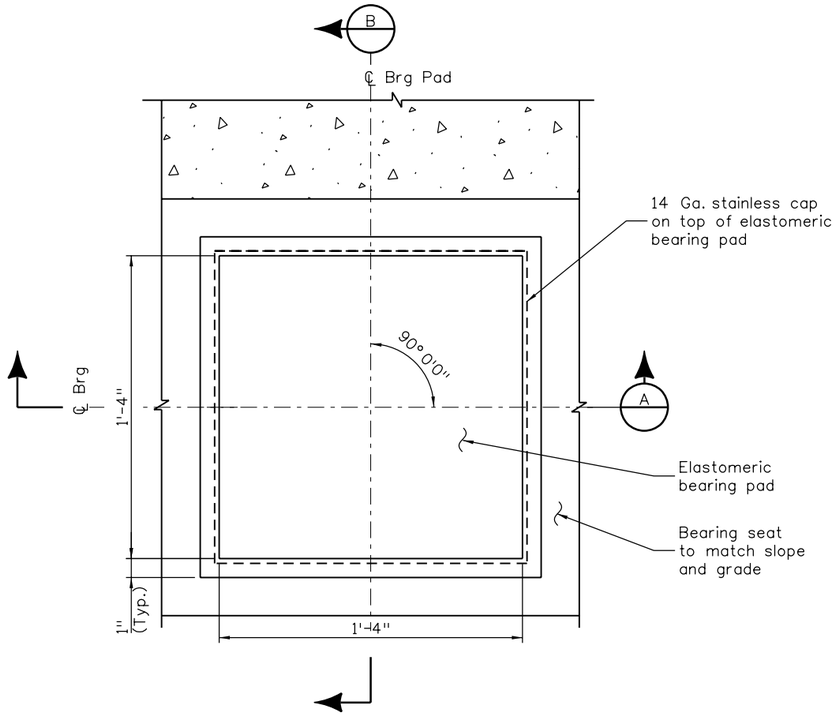

PLAN
1 ½" = 1'-0"
(Sole Plate not shown for clarity)

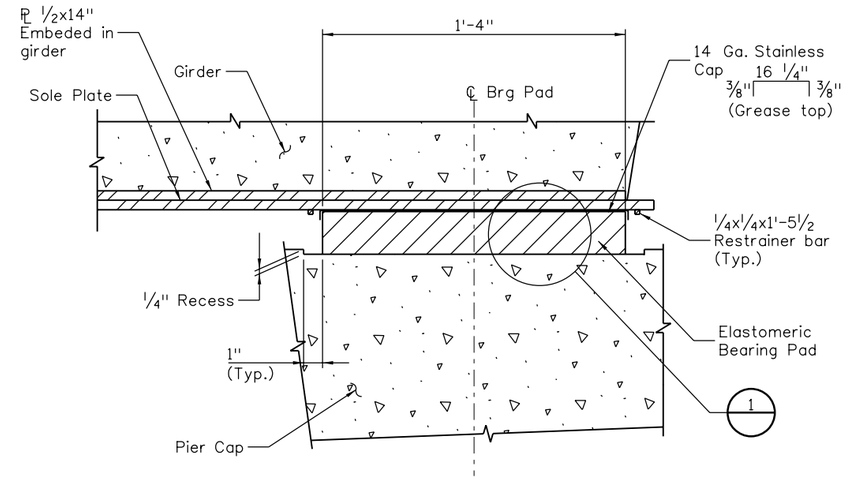

SECTION A
1 ½" = 1'-0"

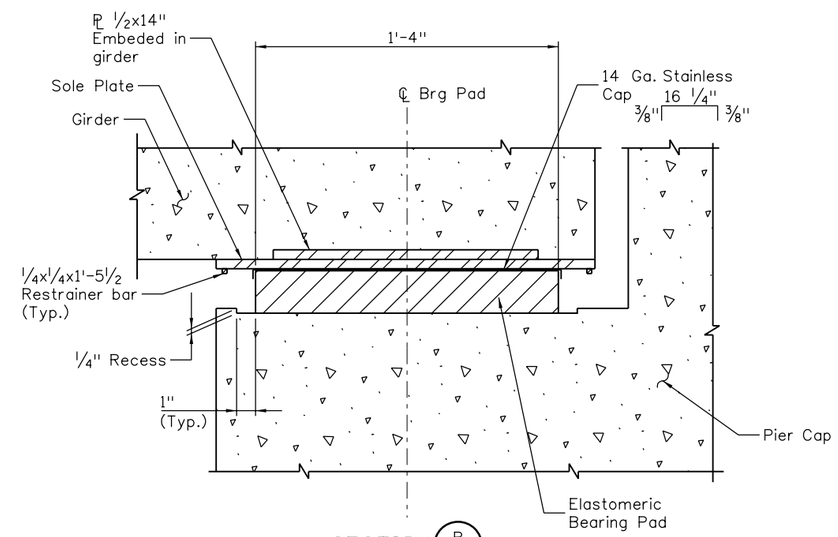

SECTION B
1 ½" = 1'-0"

NOTES:

1. Do not paint steel surfaces in contact with elastometric pad.
2. Elastomeric pad, miscellaneous hardware shall be included in the bid price for item 512, Bearing Device (Type 1).
3. Grade 3 Elastomer shall be used.
4. Higher grade elastomer may be substituted for grade 3.
5. Design Shear Modulus G - 130 psi at 73°F.
6. Hardness - 60 Durometer (Shore A)
7. AASHTO Design Method B has been used, however full scale testing is not required due to Moderate Vertical Loads.
8. For Sole Plate Details, see sheet B38.
9. For Bearing Seat Details, see sheet B30.

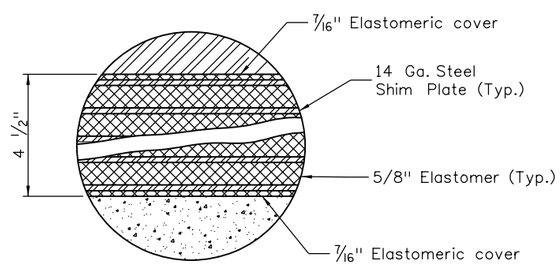

DETAIL 1

Revision Dates	MM/YY
(Preliminary Stage Only)	

Design			Detail			Quantities		
	INITIAL	DATE		INITIAL	DATE		INITIAL	DATE
Designed By	MLM	10/09	Detailed By	ERS	10/09	Quantities By		
Checked By			Checked By	MLM	12/09	Checked By		

18026 1:53:45 PM S:\Transproj\100002375\14679\Consultants\Bridge\Drawings\14679_pBD-D730.dgn

Print Date: 12/31/2009	Sheet Revisions		
File Name: 14679_pBD-D730.dgn	Date:	Comments	Init.
Horiz. Scale: 1:1 Vert. Scale: As Noted			
Staff Bridge Branch - Unit 0224 Unit Leader: MH			
PBSJ 4601 DTC Boulevard Suite 700 Denver, CO 80237			

Colorado Department of Transportation
DOT DEPARTMENT OF TRANSPORTATION
8833 South Wadsworth Court
Littleton, CO 80128
Phone: 303-972-9112 FAX: 303-972-9114
Region 6 RLB

As Constructed	SB SANTA FE TO EB C470 RAMP BEARING DETAILS			Project No./Code
No Revisions:				ES6 0852-103
Revised:	Designer: M. McMullen	Structure Numbers	F-16-YE	17679
Void:	Detailer: G. Espanto			
	Sheet Subset: Bridge	Subset Sheets: B49 of 72		Sheet Number 238

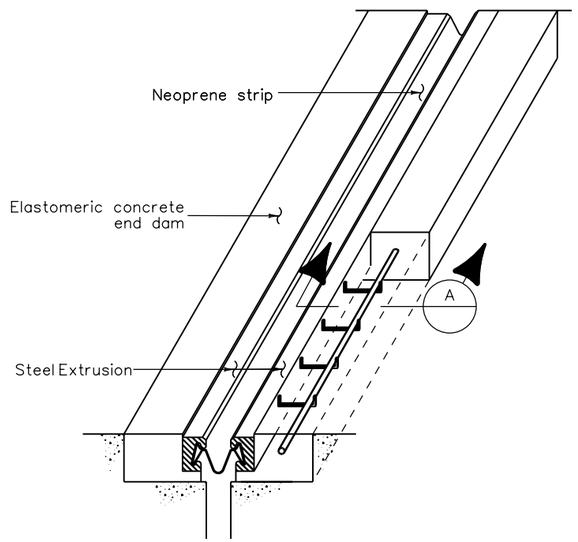

DETAIL AT EXPANSION DEVICE

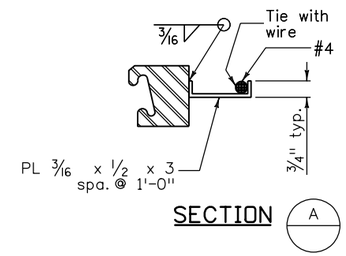

SECTION

If applicable, special field weld details to handle stage construction shall be shown on the expansion device shop drawings.

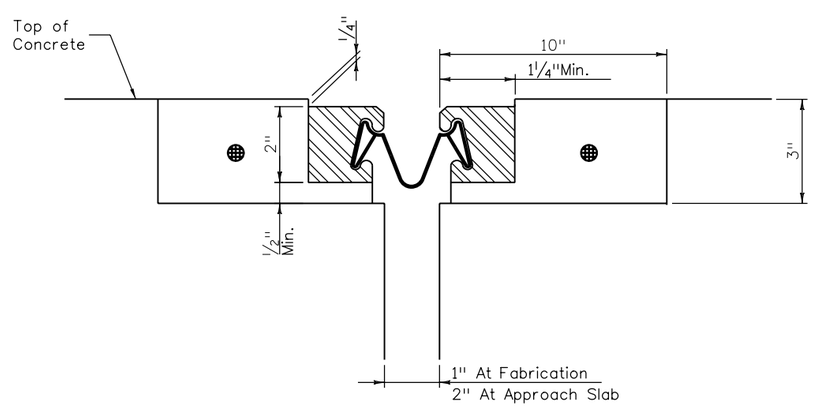

DECK DETAIL

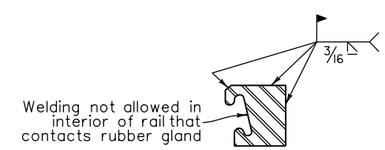

RAIL FIELD SPLICE DETAIL

NOTES:

Refer to general notes regarding minimum deck age for expansion joint installation.

The expansion device shall be installed on grade, parallel to the slope and grade of the deck.

After the concrete has attained initial set, the attachments used to hold the expansion device assembly in it's proper position shall be removed.

Do not paint steel surfaces in contact with either concrete or seal.

The neoprene gland shall be installed in one piece in accordance with section 518 of the Standard Specifications.

See section 518 in the Standard Specifications for water tight integrity testing requirements.

3/16" PL and #4 reinforcing bar are to be included in the cost of the expansion device and shown on the shop drawings.

Revision Dates (Preliminary Stage Only)

Design			Detail			Quantities		
	INITIAL	DATE		INITIAL	DATE		INITIAL	DATE
Designed By	KCS	09/09	Detailed By	DTD	09/09	Quantities By		
Checked By			Checked By	KCS	11/09	Checked By		

18026 1:53:48 PM S:\Transproj\100002375\14679\Consultants\Bridge\Drawings\14679_pBD-D731.dgn

Print Date: 12/31/2009
File Name: 14679_pBD-D731.dgn
Horiz. Scale: 1:1 Vert. Scale: As Noted
Staff Bridge Branch - Unit 0224 Unit Leader: MH

PBSJ 4601 DTC Boulevard Suite 700 Denver, CO 80237

Sheet Revisions		
Date:	Comments	Init.

Colorado Department of Transportation
8833 South Wadsworth Court
Littleton, CO 80128
Phone: 303-972-9112 FAX: 303-972-9114
Region 6 RLB

As Constructed
No Revisions:
Revised:
Void:

SB SANTA FE TO EB C470 RAMP
EXPANSION JOINT DETAILS (1 OF 2)

Designer: K. Saindon
Detailer: D. Oberosler
Sheet Subset: Bridge
Structure Numbers F-16-YE
Subset Sheets: B50 of 72

Project No./Code
ES6 0852-103
17679
Sheet Number 239

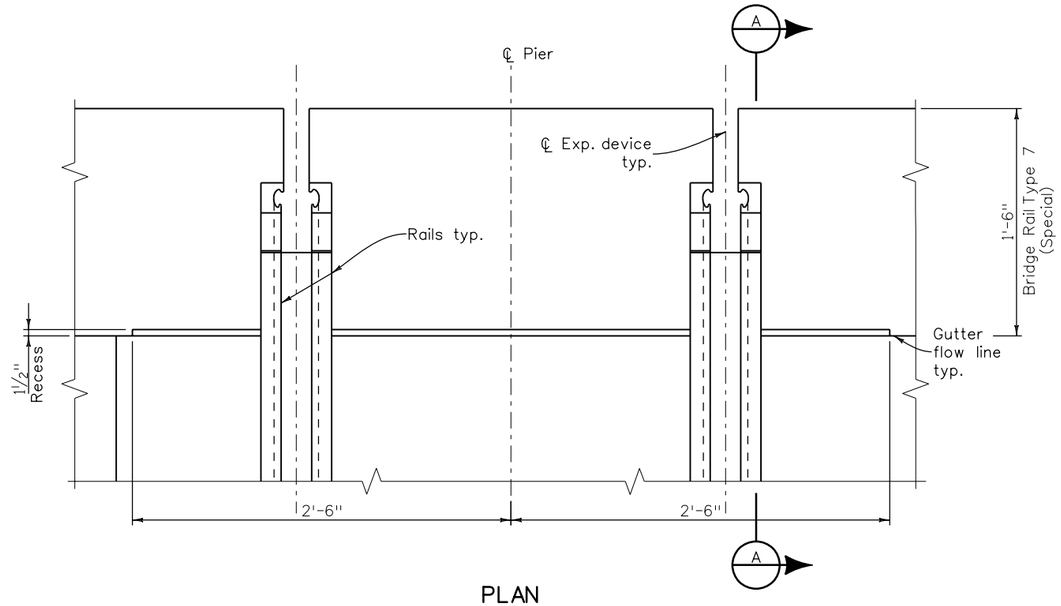

PLAN

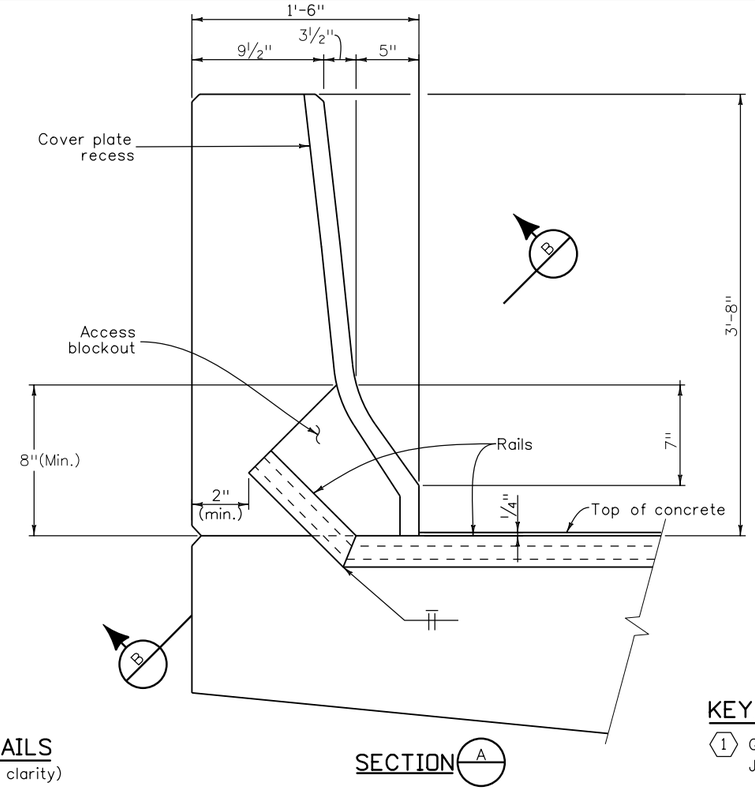

SECTION A

TYPE 7 RAIL DETAILS

(Cover plate not shown for clarity)

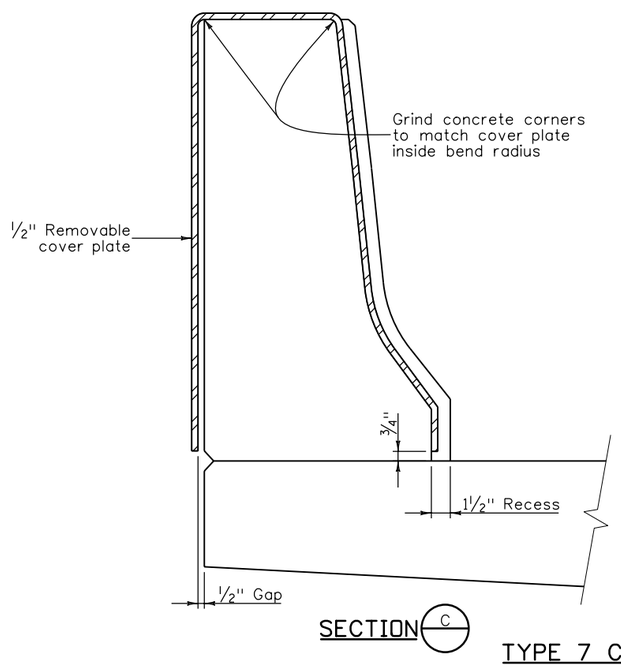

SECTION C

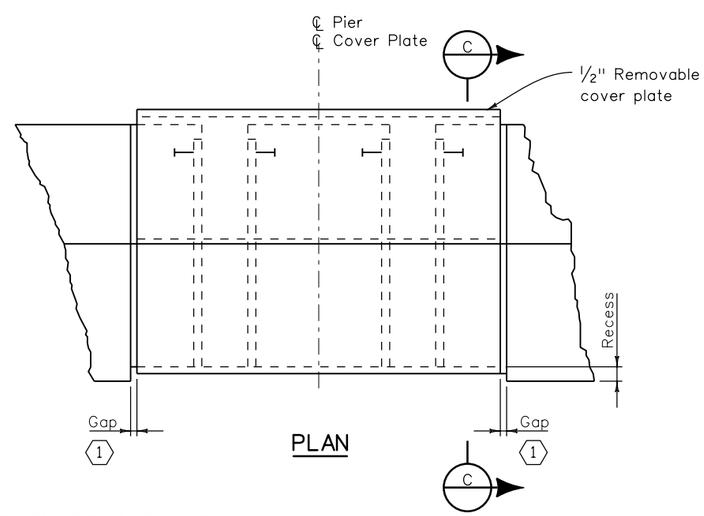

PLAN

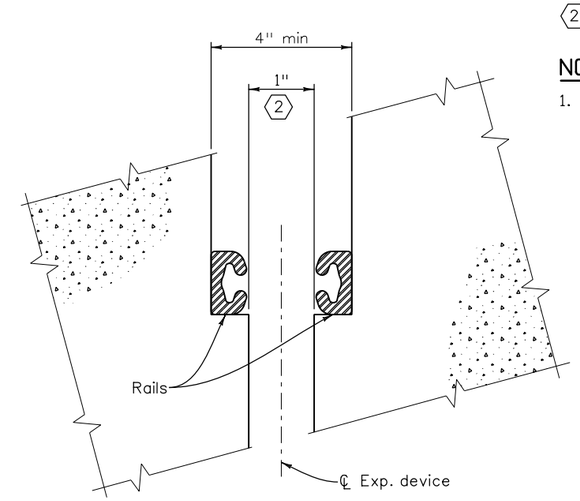

SECTION B

TYPE 7 COVER PLATE DETAILS

(Galvanize after fabrication)

KEYNOTES:

1. Gap shall equal Expansion Joint width +1"
2. 2" at Approach Slabs.

NOTE:

1. Barrier plates shall be galvanized and painted.

Revision Dates	(Preliminary Stage Only)
03/07	

Quantities		
	INITIAL	DATE
Quantities By		
Checked By		

Detail		
	INITIAL	DATE
Detailed By	DTD	09/09
Checked By	KCS	11/09

Design		
	INITIAL	DATE
Designed By	KCS	09/09
Checked By		

18026 1:53:50 PM S:\Tranproj\100002375\14679\Consultants\Bridge\Drawings\14679_pBD-D732.dgn

Print Date: 12/31/2009
File Name: 14679_pBD-D732.dgn
Horiz. Scale: 1:1 Vert. Scale: As Noted
Staff Bridge Branch - Unit 0224 Unit Leader: MH

PBSJ 4601 DTC Boulevard Suite 700 Denver, CO 80237

Sheet Revisions		
Date:	Comments	Init.

Colorado Department of Transportation
DOT DEPARTMENT OF TRANSPORTATION
8833 South Wadsworth Court
Littleton, CO 80128
Phone: 303-972-9112 FAX: 303-972-9114
Region 6 RLB

As Constructed
No Revisions:
Revised:
Void:

SB SANTA FE TO EB C470 RAMP
EXPANSION JOINT DETAILS (2 OF 2)

Designer:	K. Saindon	Structure Numbers	F-16-YE
Detailer:	M. Welch		
Sheet Subset:	Bridge	Subset Sheets: B51 of 72	

Project No./Code
ES6 0852-103
17679
Sheet Number 240

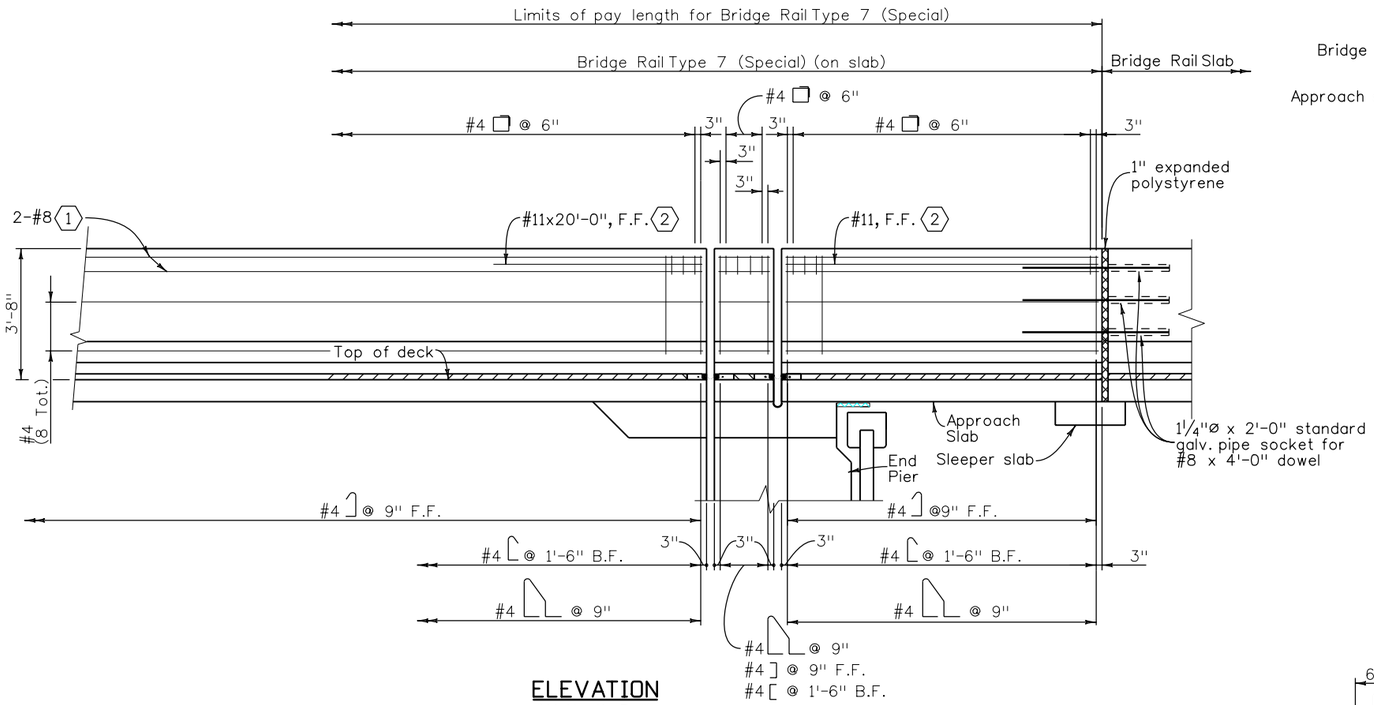

ELEVATION
(At North Rail)

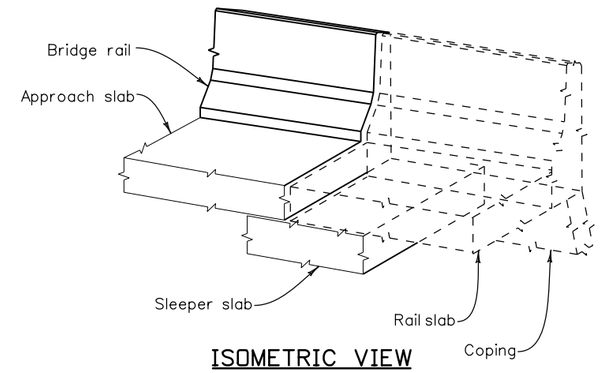

ISOMETRIC VIEW

NOTES:

Backfill retaining walls before barrier is placed.

All bridge rail concrete shall be Class D.

Longitudinal reinforcement shall stop at all expansion joints.

Bridge rail shall be constructed plumb.

Concrete and reinforcing steel shall conform to the requirements of Sections 601 and 602. Payment will be made under Item 606, Bridge Rail Type 7 (Special).

The surface of the bridge rail shall be tested with a 10 foot straightedge laid along the surface in the longitudinal direction. Deviation of the concrete surface from the straightedge shall be less than ¼" plus allowance for roadway horizontal and vertical curvature, if any.

For Fence Chain Link (Special) (36 Inch Spash Guard), see sheet B54.

For Fence Chain Link (Special) (78 Inch), see sheet B55.

For Rail Slab details, see Wall Plans.

DESIGN DATA

Reinforced Concrete:

Class D Concrete: f'_c = 4,500 psi
Reinforcing Steel: f_y = 60,000 psi

KEYNOTES:

(1) #8 bars shall be spliced mechanically to maintain clearances.

(2) At rail ends and joints.

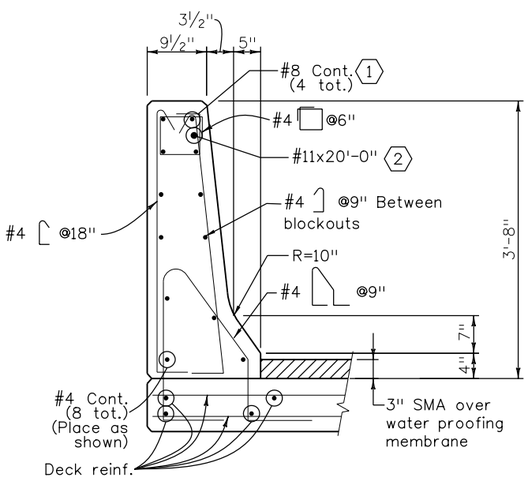

TYPICAL SECTION
(At Deck)
(In between blockouts)

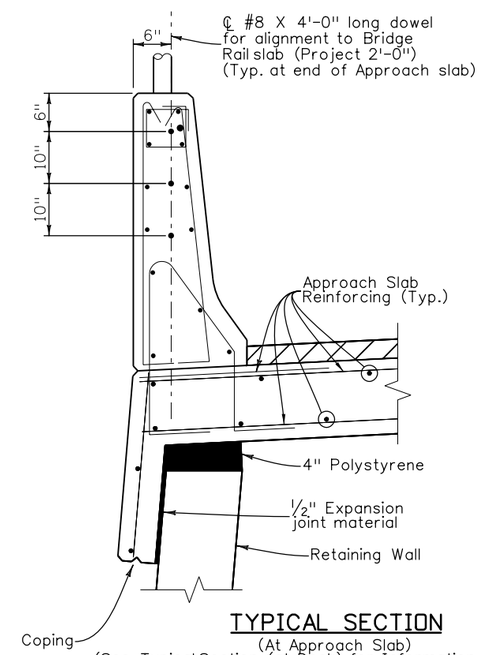

TYPICAL SECTION
(At Approach Slab)
(See Typical Section (at Deck) for Information Not Shown)

INFORMATION ONLY

Description	Unit	Per Lin. Ft.
Concrete Class D	Cu. Yd.	0.14
Reinforcing Steel (Epoxy)	Lb.	31.6

Revision Dates	(Preliminary Stage Only)
03/07	

Quantities					
	INITIAL	DATE		INITIAL	DATE
Quantities By		11/09	Quantities By		
Checked By		12/09	Checked By		

Detail			Design		
	INITIAL	DATE		INITIAL	DATE
Detailed By	DTO	10/09	Designed By	MLM	
Checked By	MLM		Checked By		

18026 1:53:52 PM S:\Tranproj\1000002375\14679\Consultants\Bridge\Drawings\14679_pBD-D733.dgn

Print Date: 12/31/2009	Sheet Revisions			Colorado Department of Transportation	As Constructed
File Name: 14679_pBD-D733.dgn	Date:	Comments	Init.	8833 South Wadsworth Court Littleton, CO 80128 Phone: 303-972-9112 FAX: 303-972-9114	No Revisions:
Horiz. Scale: 1:1 Vert. Scale: As Noted				Region 6 RLB	Revised:
Staff Bridge Branch - Unit 0224 Unit Leader: MH					Void:
PBSJ 4601 DTC Boulevard Suite 700 Denver, CO 80237					

SB SANTA FE TO EB C470 RAMP BRIDGE RAIL TYPE 7 (SPECIAL) (1 OF 2)				Project No./Code
				ES6 0852-103
Designer: M. McMullen	Structure Numbers	F-16-YE		17679
Detailer: D. Oberosler				
Sheet Subset: Bridge	Subset Sheets: B52 of 72			Sheet Number 241

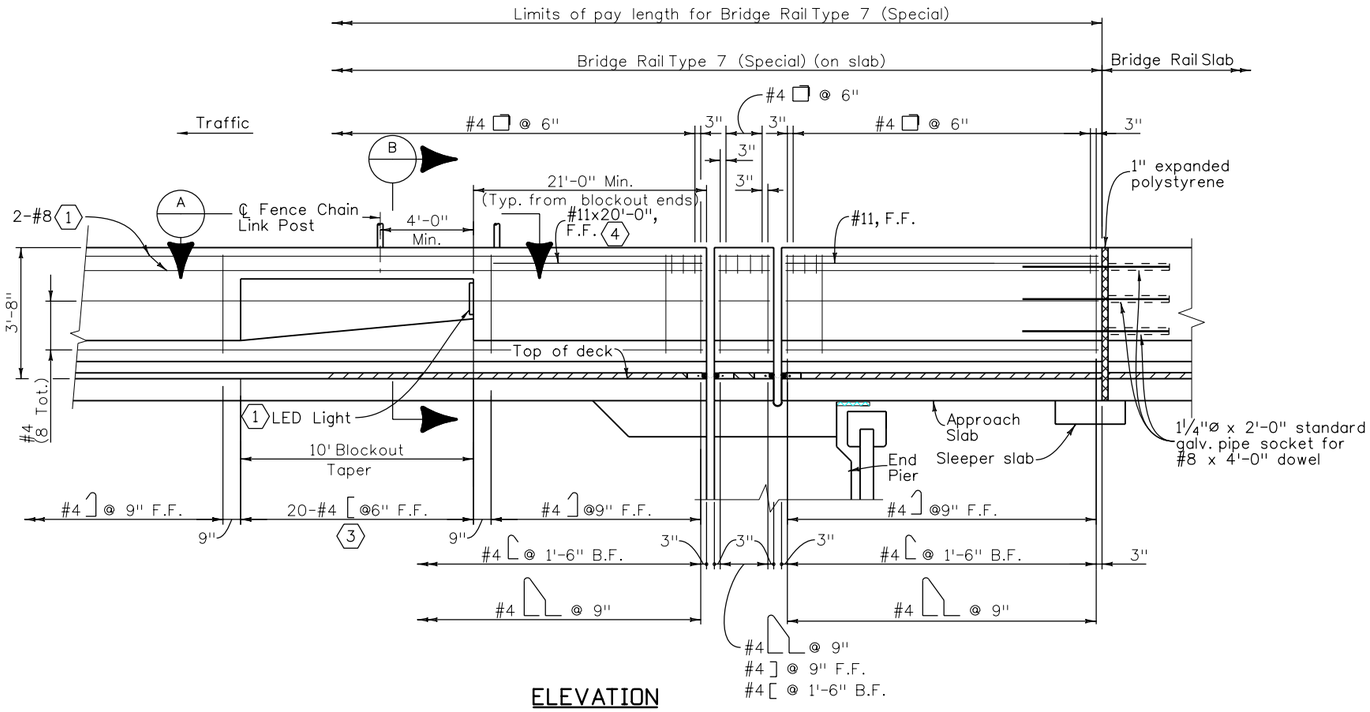

ELEVATION

(At South Rail)
(For information not shown, See "Elevation (at North Rail)")

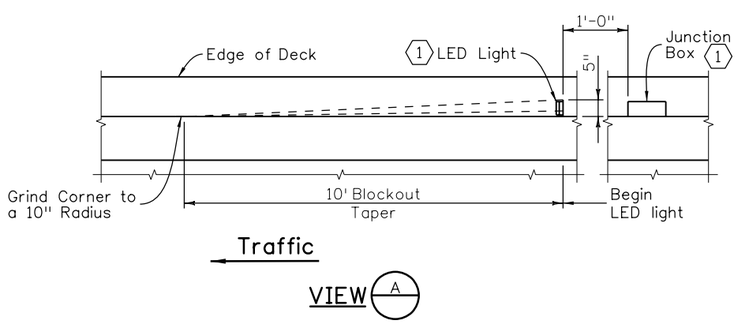

VIEW (A)

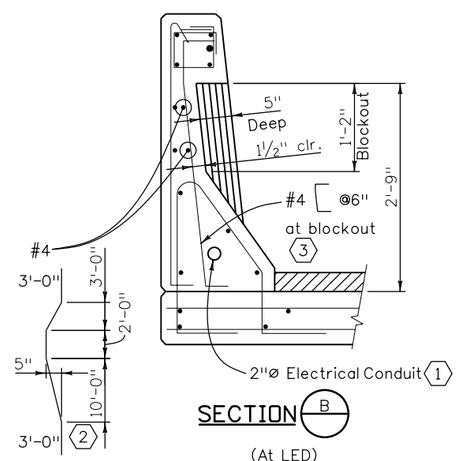

SECTION (B)

(At LED)
(For information not shown, see "Typical Section (At Deck)" on sheet B52)

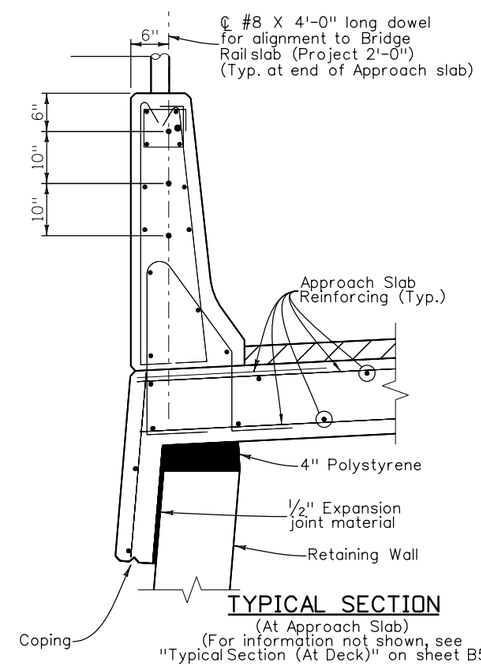

TYPICAL SECTION

(At Approach Slab)
(For information not shown, see "Typical Section (At Deck)" on sheet B52)

NOTES:

For additional notes and details, see sheet B52.

KEYNOTES:

1. For more information, see Lighting Plans.
2. At blockout only.
3. Rotate legs as needed to maintain clearance.
4. At rail ends and joints.

Design			
Designed By	MLM	10/09	DATE
Checked By			

Detail			
Detailed By	DTO	11/09	DATE
Checked By	MLM	11/09	DATE

Quantities			
Quantities By			INITIAL
Checked By			DATE

Revision Dates 03/07 (Preliminary Stage Only)

18026 1:53:55 PM S:\Transproj\100002375\14679\Consultants\Bridge\Drawings\14679_pBD-D734.dgn

Print Date: 12/31/2009		Sheet Revisions	
File Name: 14679_pBD-D734.dgn		Date:	Comments	Init.
Horiz. Scale: 1:1 Vert. Scale: As Noted				
Staff Bridge Branch - Unit 0224 Unit Leader: MH				
PBSJ 4601 DTC Boulevard Suite 700 Denver, CO 80237				

Colorado Department of Transportation
DOT DEPARTMENT OF TRANSPORTATION
8833 South Wadsworth Court
Littleton, CO 80128
Phone: 303-972-9112 FAX: 303-972-9114
Region 6 RLB

As Constructed
No Revisions:
Revised:
Void:

SB SANTA FE TO EB C470 RAMP
BRIDGE RAIL TYPE 7 (SPECIAL)
(2 OF 2)

Designer:	K. Saindon	Structure Numbers	F-16-YE
Detailer:	D. Oberosler		
Sheet Subset:	Bridge	Subset Sheets: B53 of 63	

Project No./Code
ES6 0852-103
17679
Sheet Number 242

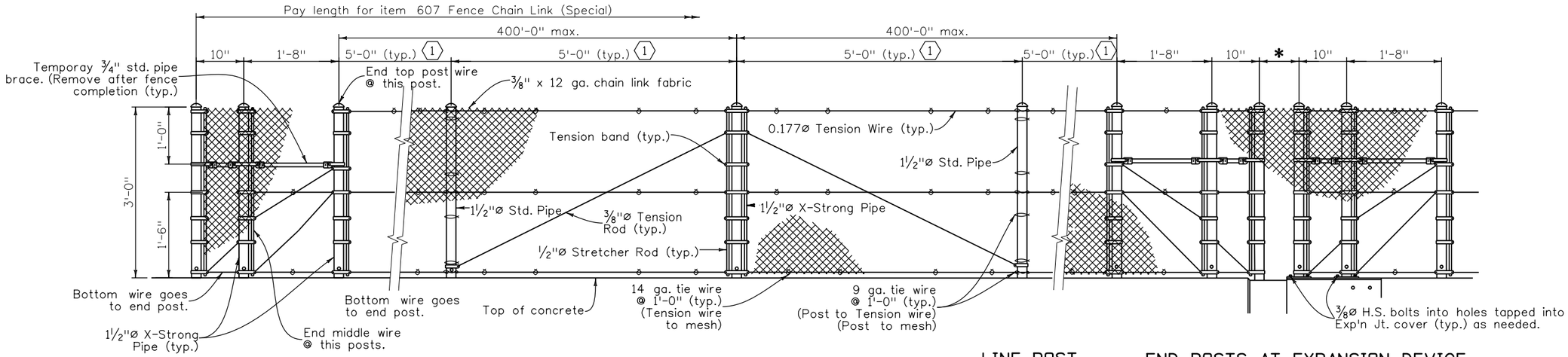

* For Steel Bridges:
Use ½ of rated joint motion +6", 8" min. If not known, rated motion may be assumed to be 1¼" per 100' contributing to motion.

* For Concrete Bridges:
Use ¼ of rated joint motion +6", 8" min. If not known, rated motion may be assumed to be 1¼" per 100' contributing to motion.

If * exceeds 10" run mesh over gap with enough slack for ½ rated expansion motion.

NOTES

Anchorage assembly shall be galvanized after fabrication. If Vinyl Coating is specified, the fence assembly shall be Galvanized and Vinyl Coated after fabrication. Anchorages shall only be galvanized after fabrication.

Tension Rods and Wires shall have turnbuckles.

Post shall be vertical.

Pipe shall conform to ASTM A53 Type E or S, Grade B.

KEYNOTES:

1. For placement of post at LED light barrier blockout, see sheet B53.

DESIGN DATA

Test Tension = 5400 lbs
Test with: Max Midbay deflection = 1¼" for Lateral Load of 160 lbs. on 1 ft². 1'-6" up @ center of bay.

Live Load: wind load = 32 psf
or snow impact load = 96 plf @ 1'-6" up

Structural Steel: Pipe f_y = 35,000 psi
ASTM A572 (GR 50) f_y = 50,000 psi

Standard Color Vinyl Coatings over Galvanized Wire	Munsell Color System No. (as per ASTM)
☐ Galvanized Only	None
☐ Brown	7YR 2.4/1.75
☐ Green	8.8G 2.63/5.8
☒ Black	1.8PB 1.26/0.5

Special Color Vinyl Coatings over Galvanized Wire	☐Federal Color No. ☐Munsell Color System No.

If the specific color of coating is not marked and the Federal Color No. or the Munsell Color System No. is not given, vinyl coating is not required.

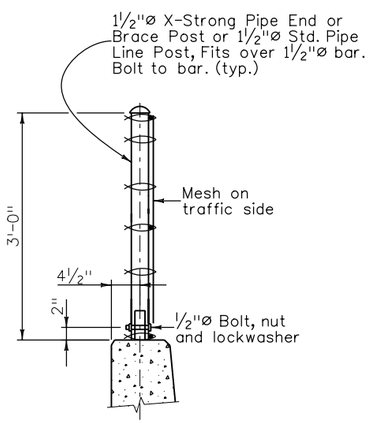

TYPICAL SECTION

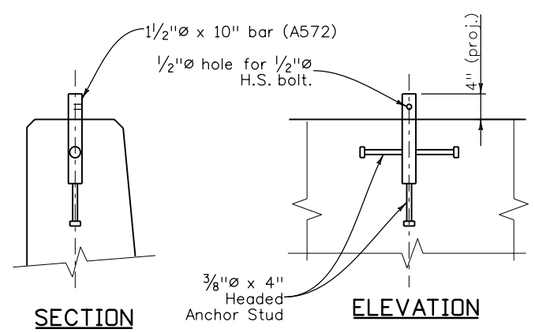

ANCHORAGE DETAIL

Revision Dates	(Preliminary Stage Only)
03/07	

Quantities					
	INITIAL	DATE		INITIAL	DATE
Designed By			Quantities By		
Checked By			Checked By		

Design			Detail		
	INITIAL	DATE		INITIAL	DATE
Designed By	KCS	07/09	Detailed By		
Checked By			Checked By		

18026 1:53:57 PM S:\Tranproj\100002375\14679\Consultants\Bridge\Drawings\14679_pBD-D735.dgn

Print Date: 12/31/2009	Sheet Revisions	Date:	Comments	Init.
File Name: 14679_pBD-D735.dgn				
Horiz. Scale: 1:1 Vert. Scale: As Noted				
Staff Bridge Branch - Unit 0224 Unit Leader: MH				

PBSJ 4601 DTC Boulevard Suite 700 Denver, CO 80237

Colorado Department of Transportation
DOT DEPARTMENT OF TRANSPORTATION
8833 South Wadsworth Court
Littleton, CO 80128
Phone: 303-972-9112 FAX: 303-972-9114
Region 6 RLB

As Constructed
No Revisions:
Revised:
Void:

SB SANTA FE TO EB C470 RAMP
FENCE CHAIN LINK (SPECIAL)
(36 INCH SPLASH GUARD)

Designer:	K. Saindon	Structure Numbers	F-16-YE
Detailer:	M. Welch		
Sheet Subset:	Bridge	Subset Sheets: B54 of 72	

Project No./Code
ES6 0852-103
17679
Sheet Number 243

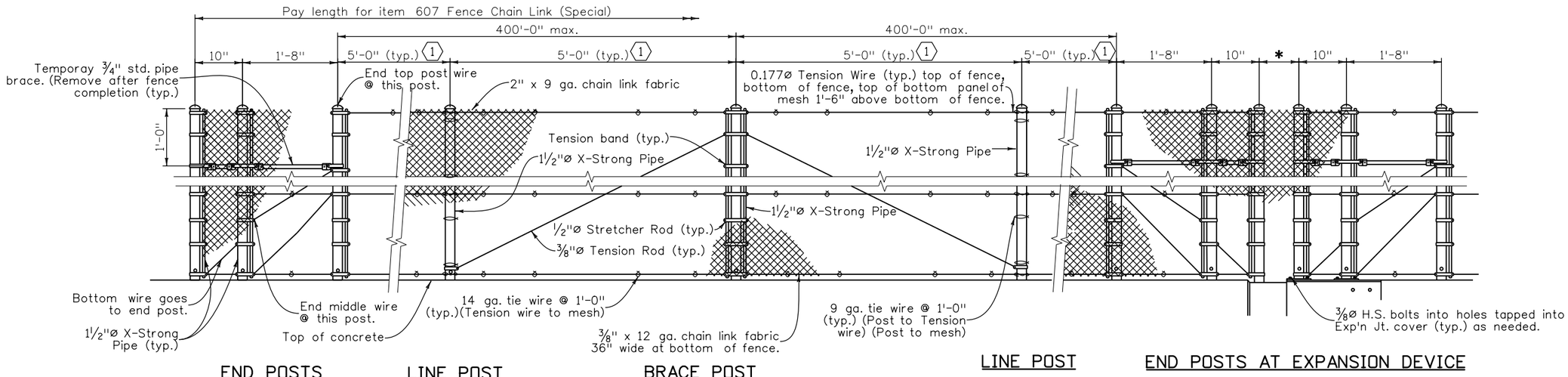

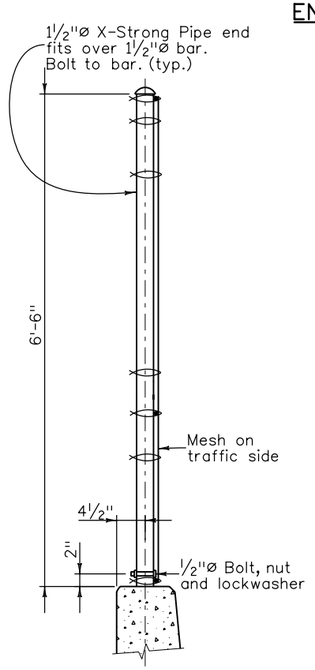

TYPICAL SECTION

* For Steel Bridges:
  Use 7/16 of rated joint motion +6", 8" min. If not known, rated motion may be assumed to be 1 1/4" per 100' contributing to motion.
* For Concrete Bridges:
  Use 1/4 of rated joint motion +6", 8" min. If not known, rated motion may be assumed to be 1 1/4" per 100' contributing to motion.

If * exceeds 10" run mesh over gap with enough slack for 1/8 rated expansion motion.

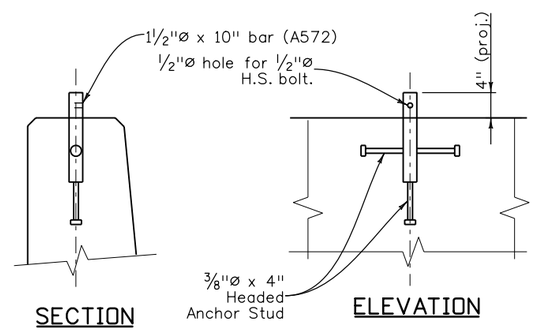

SECTION

ELEVATION

ANCHORAGE DETAIL

NOTES

Anchorage assembly shall be galvanized after fabrication. If Vinyl Coating is specified, the fence assembly shall be Galvanized and Vinyl Coated after fabrication. Anchorages shall only be galvanized after fabrication.

Tension Rods and Wires shall have turnbuckles.

Post shall be vertical.

Pipe shall conform to ASTM A53 Type E or S, Grade B.

KEYNOTES:

1 For placement of post at LED light barrier blockout, see sheet B53.

DESIGN DATA

Test Tension = 5400 lbs
Test with: Max Midbay deflection = 1 1/4" for Lateral Load of 160 lbs. on 1 ft².
1'-6" up @ center of bay.

Live Load: wind load = 32 psf. 3/8" mesh
wind load = 6 psf. 2" mesh
or snow impact load = 96 plf @ 1'-6" up

Structural Steel: Pipe f_y = 35,000 psi
ASTM A572 (GR 50) f_y = 50,000 psi

Standard Color Vinyl Coatings over Galvanized Wire		Munsell Color System No. (as per ASTM)
	Galvanized Only	None
	Brown	7YR 2.4/1.75
	Green	8.8G 2.63/5.8
X	Black	1.8PB 1.26/0.5

Special Color Vinyl Coatings over Galvanized Wire	☐Federal Color No. ☐Munsell Color System No.

If the specific color of coating is not marked and the Federal Color No. or the Munsell Color System No. is not given, vinyl coating is not required.

Revision Dates	
(Preliminary Stage Only)	
MM/YY	

Quantities			
	INITIAL	DATE	
Quantities By		MM/YY	
Checked By			

Detail			
	INITIAL	DATE	
Detailed By	MJW	07/09	
Checked By			

Design			
	INITIAL	DATE	
Designed By	KCS	07/09	
Checked By			

18026 1:54:00 PM S:\Tranproj\100002375\14679\Consultants\Bridge\Drawings\14679_pBD-D736.dgn

Print Date: 12/31/2009
File Name: 14679_pBD-D736.dgn
Horiz. Scale: 1:1 Vert. Scale: As Noted
Staff Bridge Branch - Unit 0224 Unit Leader: MH

PBSJ 4601 DTC Boulevard Suite 700 Denver, CO 80237

Sheet Revisions		
Date:	Comments	Init.

Colorado Department of Transportation
DOT DEPARTMENT OF TRANSPORTATION
8833 South Wadsworth Court
Littleton, CO 80128
Phone: 303-972-9112 FAX: 303-972-9114
Region 6 RLB

As Constructed
No Revisions:
Revised:
Void:

SB SANTA FE TO EB C470 RAMP FENCE CHAIN LINK (SPECIAL) (78 INCH)

Designer:	K. Saindon	Structure Numbers	F-16-YE
Detailer:	M. Welch		
Sheet Subset:	Bridge	Subset Sheets: B55 of 72	

Project No./Code
ES6 0852-103
17679
Sheet Number 244

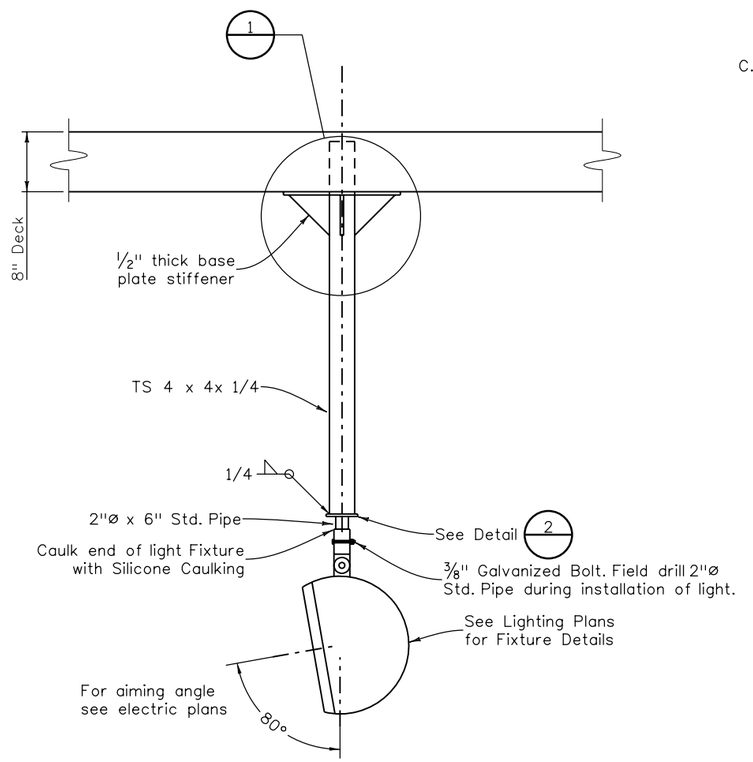

FIXTURE MOUNTING DETAIL

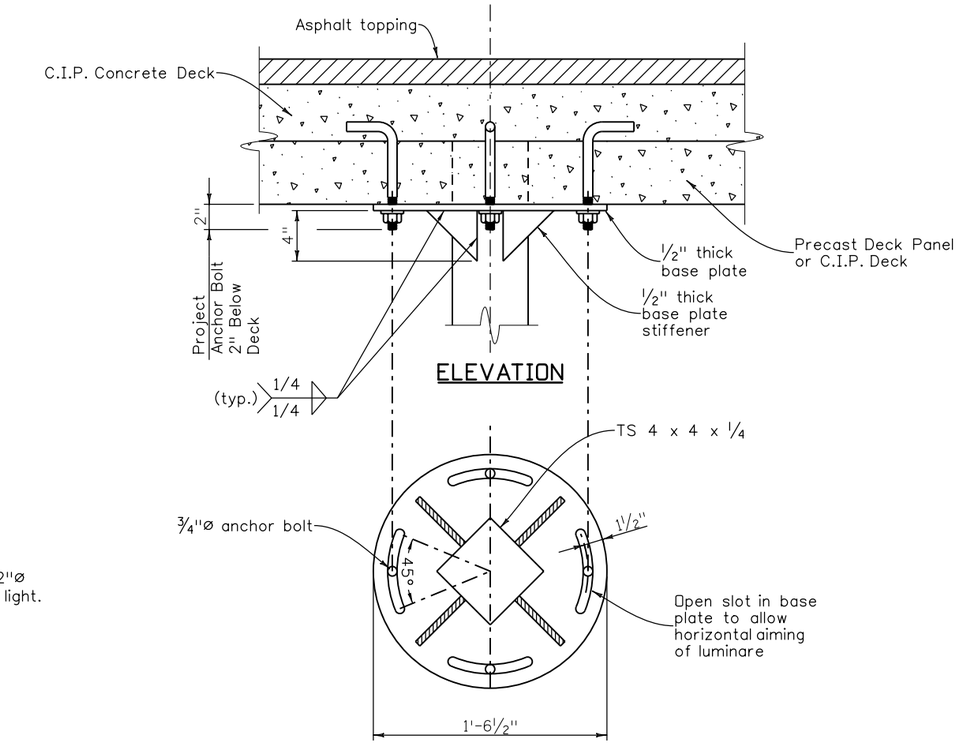

ELEVATION

PLAN

DETAIL 1

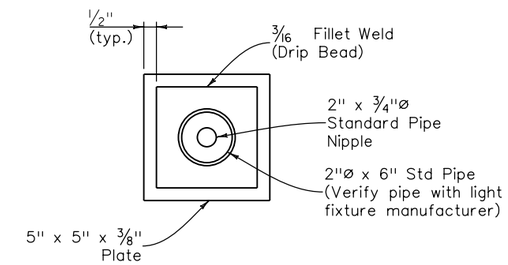

DETAIL 2

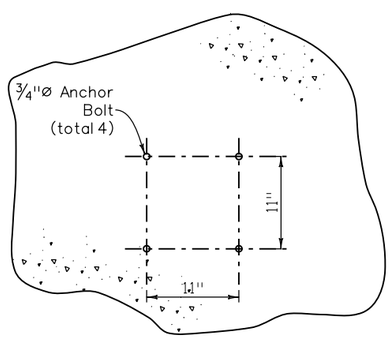

ANCHOR BOLT PLACEMENT DIAGRAM

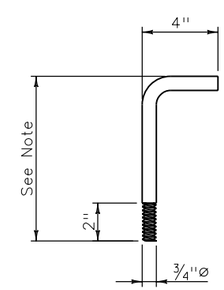

NOTE

Anchor bolt length shall be determined by contractor based on deck thickness and precast panel depth.

ANCHOR BOLT DETAIL

NOTES:

1. Structural tubing shall be ASTM A500 Grade B.
2. Anchor bolts shall be ASTM F1554.
3. Mounting rod and anchor bolts shall be galvanized after fabrication.
4. Conduit quantity is shown in lighting tabulation.
5. Mounting fixture, including all necessary hardware, is incidental to underdeck luminaire. Refer to lighting tabulation in lighting plans.

Revision Dates (Preliminary Stage Only)
MM/YY

Quantities		
	INITIAL	DATE
Quantities By		
Checked By		

Design			Detail			Quantities		
	INITIAL	DATE		INITIAL	DATE		INITIAL	DATE
Designed By	KCS	09/09	Detailed By	GS	09/09	Quantities By		
Checked By			Checked By	KCS	11/09	Checked By		

18026 1:54:02 PM S:\Tranproj\100002375\14679\Consultants\Bridge\Drawings\14679_pBD-D737.dgn

Print Date: 12/31/2009
File Name: 14679_pBD-D737.dgn
Horiz. Scale: 1:1 Vert. Scale: As Noted
Staff Bridge Branch - Unit 0224 Unit Leader: MH

PBSJ 4601 DTC Boulevard Suite 700 Denver, CO 80237

Sheet Revisions		
Date:	Comments	Init.

Colorado Department of Transportation
DOT DEPARTMENT OF TRANSPORTATION
8833 South Wadsworth Court
Littleton, CO 80128
Phone: 303-972-9112 FAX: 303-972-9114
Region 6 RLB

As Constructed
No Revisions:
Revised:
Void:

SB SANTA FE TO EB C470 RAMP UNDERDECK LUMINAIRES

Designer: K. Saindon
Detailer: G. Espanto
Sheet Subset: Bridge
Structure Numbers F-16-YE
Subset Sheets: B56 of 72

Project No./Code
ES6 0852-103
17679
Sheet Number 245

NOTES:

Free open area: 190 Sq. In./Grate.

Material: Cast grey iron ASTM A-48 Class 35B

Finish: No Paint

Weight: Grate 170LBS. each.

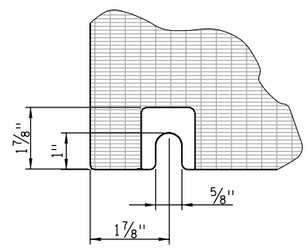

DETAIL 1

BOLT SLOT AT CORNER (TYP.)

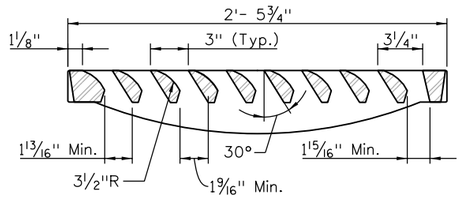

SECTION A

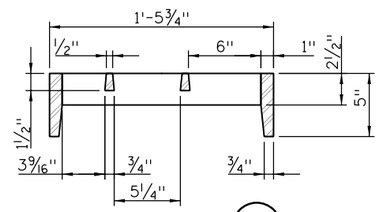

SECTION B

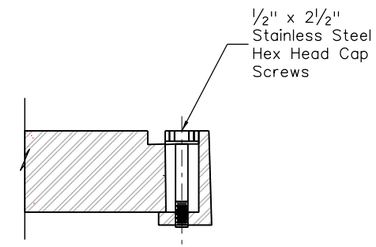

SECTION D

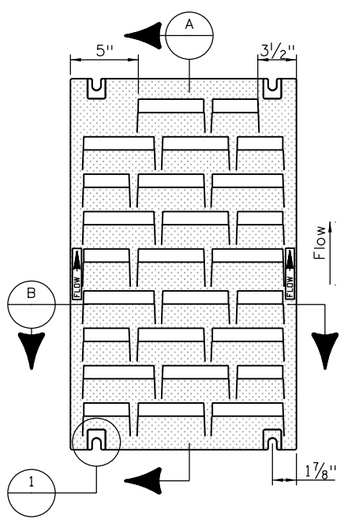

GRATE PLAN

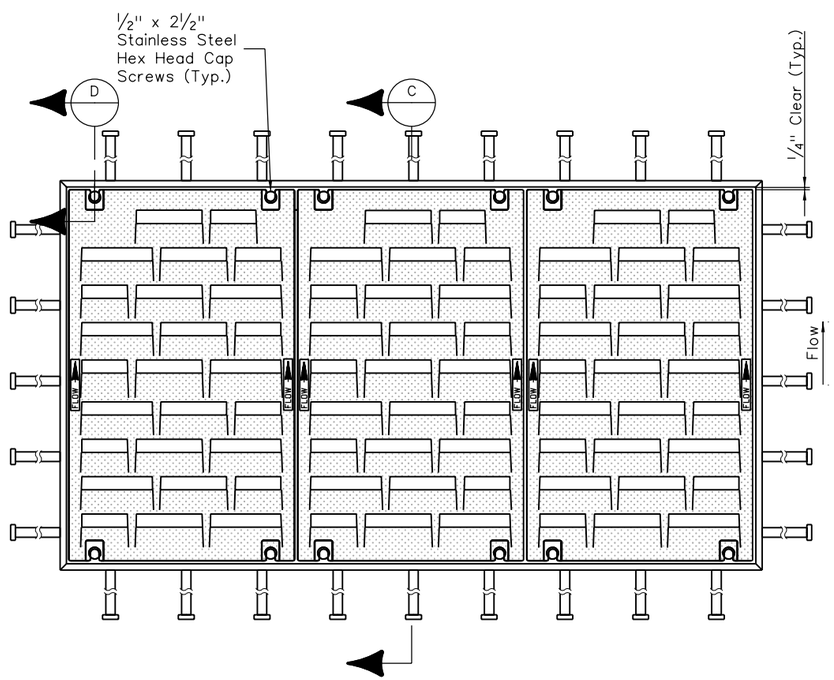

MULTIPLE GRATE WITH FRAME PLAN

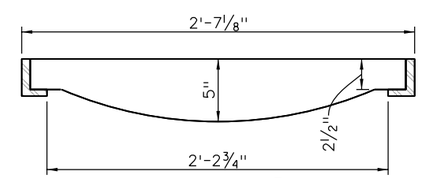

SECTION C

Print Date: 12/31/2009	Sheet Revisions			Colorado Department of Transportation	As Constructed	SB SANTA FE TO EB C470 RAMP DECK DRAIN DETAILS (1 OF 3)		Project No./Code
File Name: 14679_pBD-D738.dgn	Date:	Comments	Init.	8833 South Wadsworth Court Littleton, CO 80128 Phone: 303-972-9112 FAX: 303-972-9114	No Revisions:			ES6 0852-103
Horiz. Scale: 1:4 Vert. Scale: As Noted					Revised:	Designer: K. Saindon	Structure Numbers F-16-YE	17679
Staff Bridge Branch - Unit 0224 Unit Leader: MH				Region 6 RLB	Void:	Detailer: D. Oberosler		
PBSJ 4601 DTC Boulevard Suite 700 Denver, CO 80237						Sheet Subset: Bridge	Subset Sheets: B57 of 72	Sheet Number 246

Revision Dates (Preliminary Stage Only)	
MM/YY	

Quantities		
	INITIAL	DATE
Quantities By		
Checked By		

Detail				
	INITIAL	DATE	INITIAL	DATE
Detailed By	DTD	09/09	Quantities By	
Checked By	KCS	11/09	Checked By	

Design			
	INITIAL	DATE	
Designed By	KCS	09/09	
Checked By			

18026 1:54:05 PM S:\Tranproj\100002375\14679\Consultants\Bridge\Drawings\14679_pBD-D738.dgn

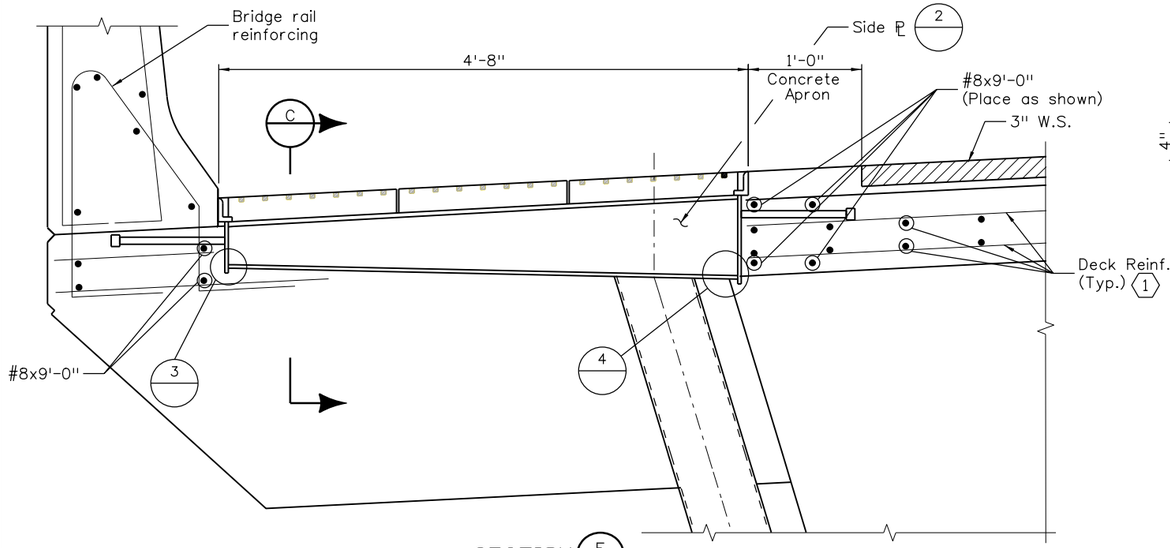

SECTION E

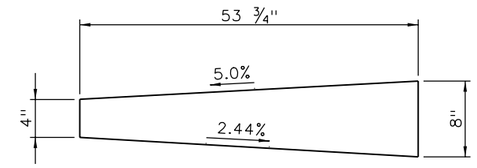

SIDE ℙ ELEVATION DETAIL 2

All dimensions shown are taken inside the bent plate.

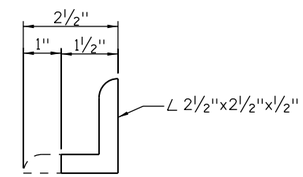

ANGLE CUTOFF DETAIL

NOTES:

Bridge drains and downspouts shall be galvanized steel.

For location of bridge drains, see Construction Layout Sheets B14 thru B21.

Coordinate all grate dimensions with supplier prior to any fabrication of the box or frame.

KEYNOTES:

1. Cut slab reinforcing bars to clear bridge drains. The additional bars shall be set between top and bottom slab bars. Bend bridge rail reinforcing as required. All reinforcing shall be epoxy coated.

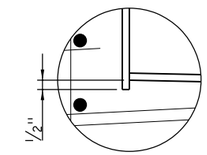

DETAIL 3

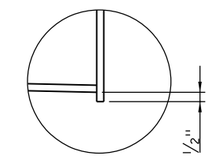

DETAIL 4

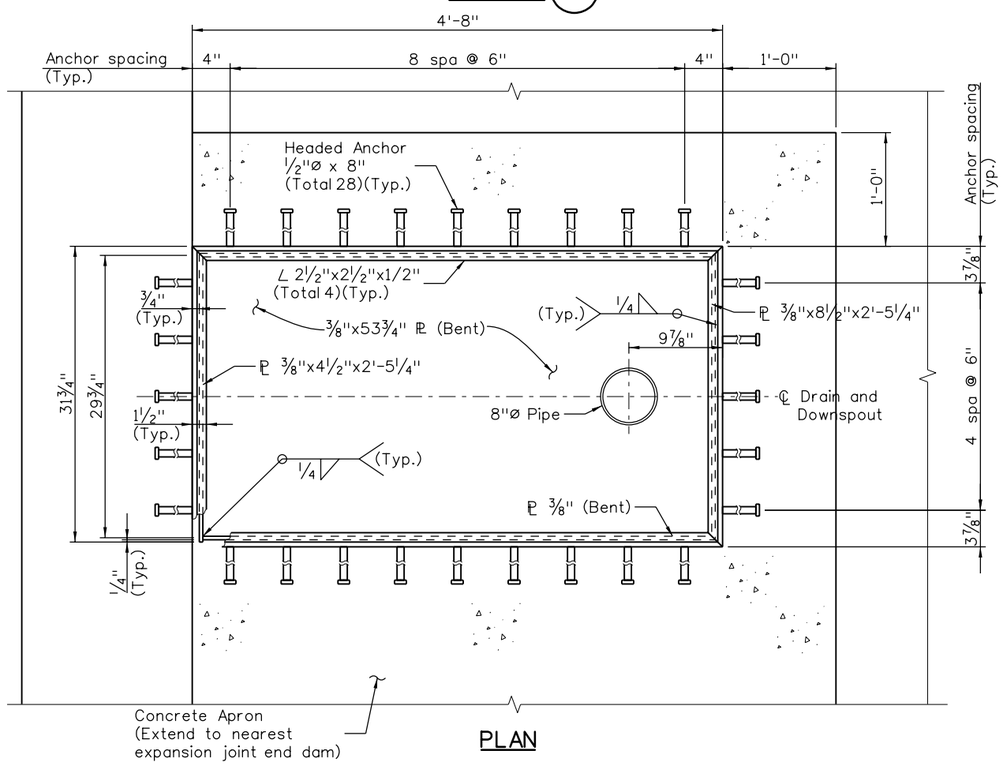

PLAN

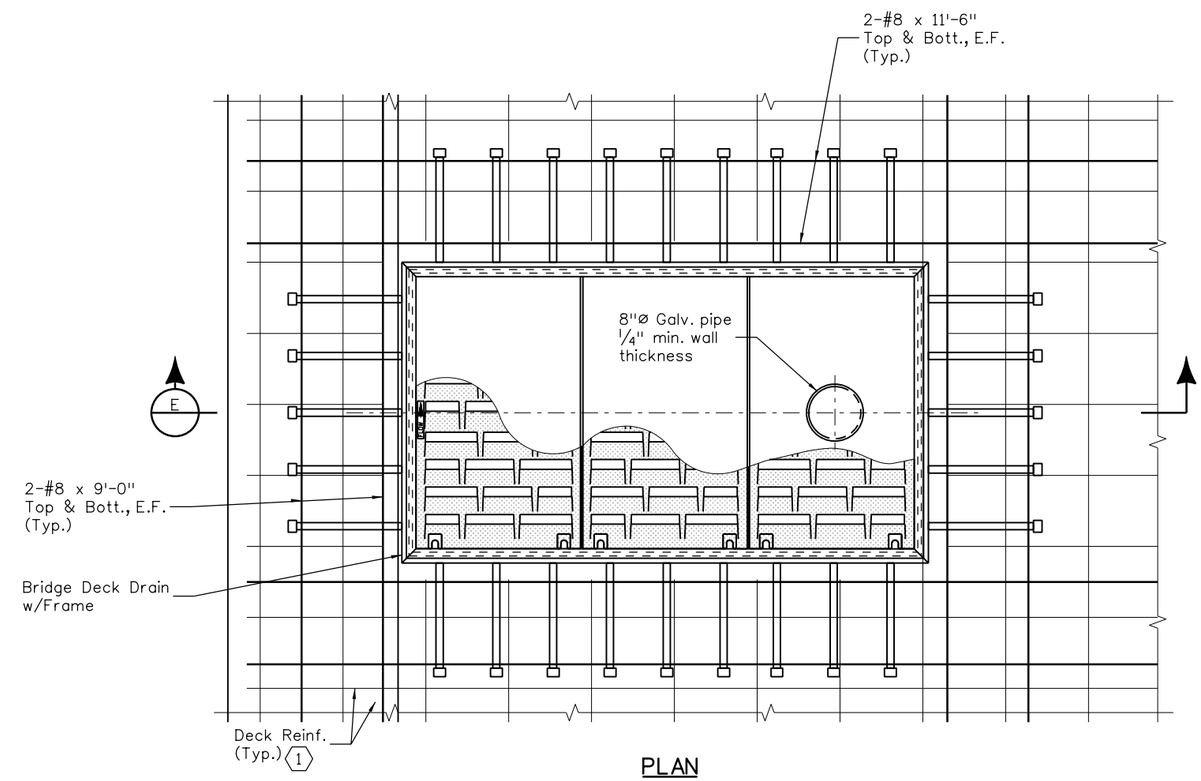

PLAN

Revision Dates	
MM/YY	(Preliminary Stage Only)

Quantities			
	INITIAL	DATE	
Quantities By			
Checked By			

Detail			
	INITIAL	DATE	
Detailed By	ERS	09/09	
Checked By	KCS	11/09	

Design			
	INITIAL	DATE	
Designed By	KCS	09/09	
Checked By			

18026 1:54:16 PM S:\Tranproj\100002375\14679\Consultants\Bridge\Drawings\14679_pBD-D739.dgn

Print Date: 12/31/2009
File Name: 14679_pBD-D739.dgn
Horiz. Scale: 1:4 Vert. Scale: As Noted
Staff Bridge Branch - Unit 0224 Unit Leader: MH

PBSJ 4601 DTC Boulevard Suite 700 Denver, CO 80237

Sheet Revisions		
Date:	Comments	Init.

Colorado Department of Transportation
DOT DEPARTMENT OF TRANSPORTATION
8833 South Wadsworth Court
Littleton, CO 80128
Phone: 303-972-9112 FAX: 303-972-9114
Region 6 RLB

As Constructed
No Revisions:
Revised:
Void:

SB SANTA FE TO EB C470 RAMP
DECK DRAIN DETAILS (2 OF 3)

Designer: K. Saindon
Detailer: D. Oberosler
Sheet Subset: Bridge
Structure Numbers F-16-YE
Subset Sheets: B58 of 72

Project No./Code
ES6 0852-103
17679
Sheet Number 247

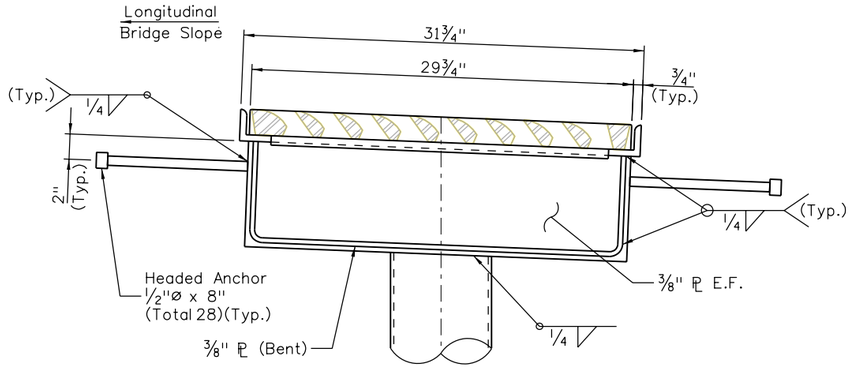

SECTION C B58

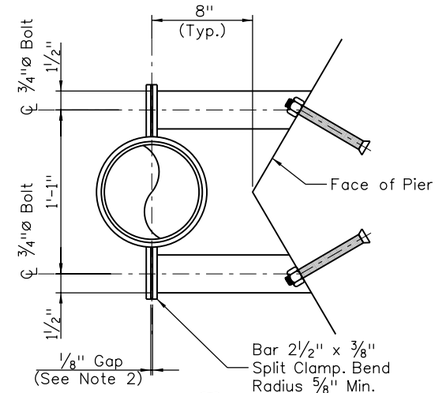

SECTION H

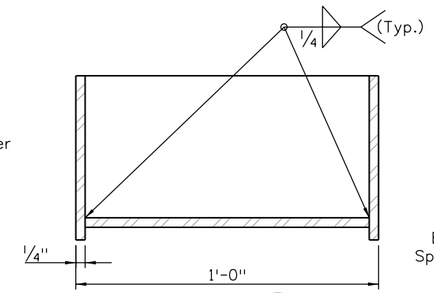

SECTION J

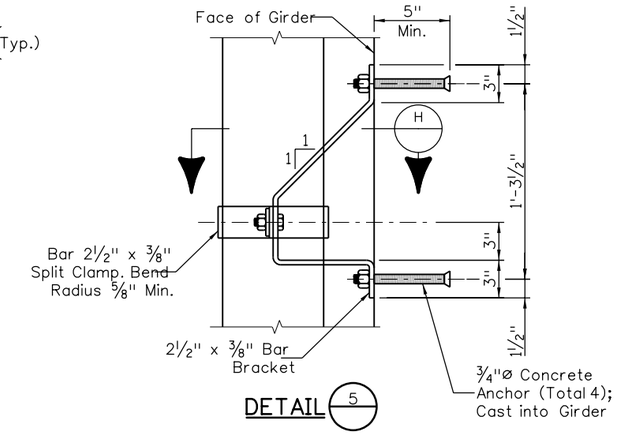

DETAIL 5

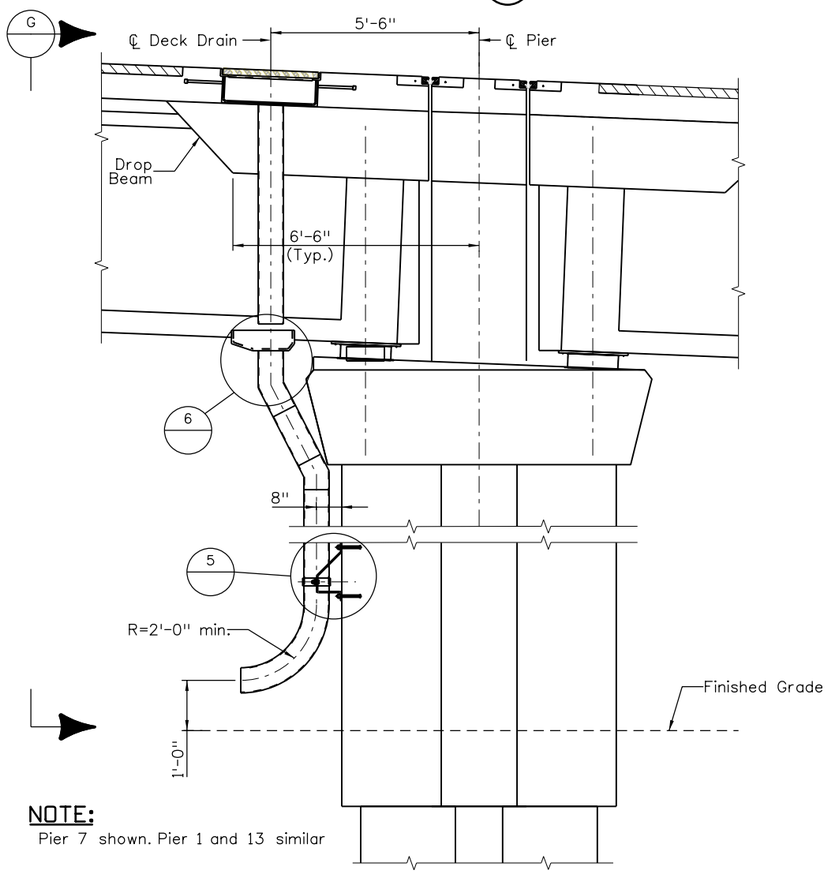

NOTE:
Pier 7 shown. Pier 1 and 13 similar

SIDE ELEVATION
(Pier 7 shown, Piers 1 & 13 similar)

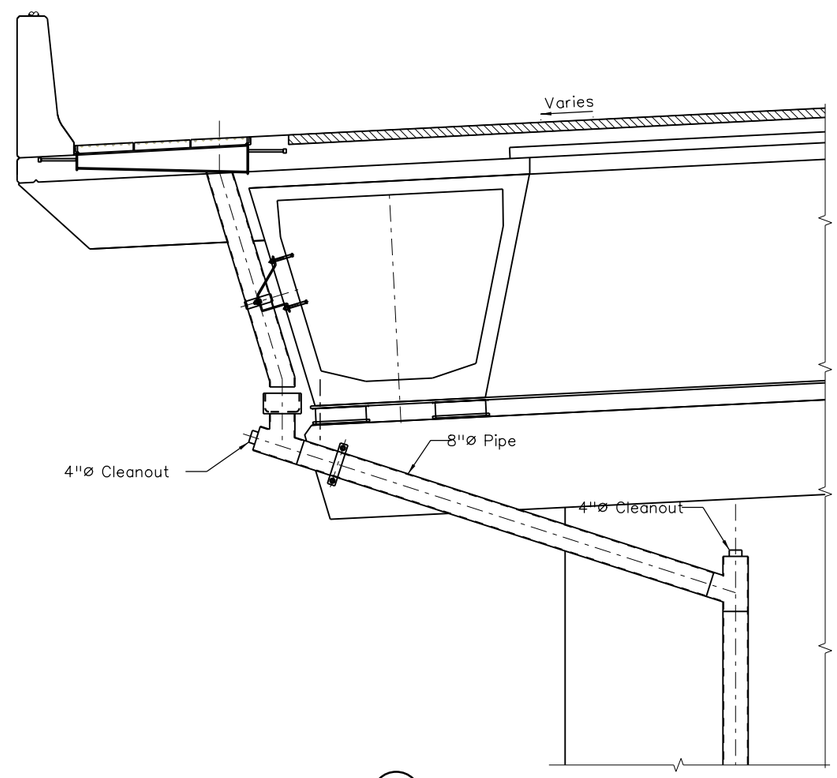

VIEW G

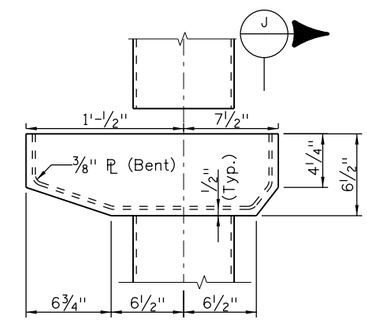

DETAIL 6

NOTES:

Pipe hangers and concrete inserts shall have a minimum capacity of 900 lbs and a max. spacing of 12 feet.

A ⅛" gap shall be fabricated into pipe clamp. Gap shall close up after full tensioning of bolts.

All steel components of bridge drain, downspouts, pipe and hanger assembly shall be galvaized, except vane grate.

Pay item BRIDGE DRAIN (EA) include grates, frame, apron, downspouts, piping and all incidental necessary for a complete installation.

Design			Detail			Quantities		
	INITIAL	DATE		INITIAL	DATE		INITIAL	DATE
Designed By	KCS		Detailed By	ERS	09/09	Quantities By		
Checked By			Checked By			Checked By		

Revision Dates (Preliminary Stage Only)
MM/YY

18026 1:54:22 PM S:\Tranproj\100002375\14679\Consultants\Bridge\Drawings\14679_pBD-D740.dgn

Print Date: 12/31/2009
File Name: 14679_pBD-D740.dgn
Horiz. Scale: 1:4 Vert. Scale: As Noted
Staff Bridge Branch - Unit 0224 JIE

PBSJ 4601 DTC Boulevard Suite 700 Denver, CO 80237

Sheet Revisions		
Date:	Comments	Init.

Colorado Department of Transportation
DOT DEPARTMENT OF TRANSPORTATION
8833 South Wadsworth Court
Littleton, CO 80128
Phone: 303-972-9112 FAX: 303-972-9114
Region 6 RLB

As Constructed
No Revisions:
Revised:
Void:

SB SANTA FE TO EB C470 RAMP
DECK DRAIN DETAILS (3 of 3)

Designer: K. Saindon
Detailer: D. Oberosler
Sheet Subset: Bridge
Structure Numbers: F-16-YE
Subset Sheets: B59 of 72

Project No./Code
ES6 0852-103
17679
Sheet Number 248

State of Colorado
Department of Transportation
Staff Bridge Design
Bridge Geometry Project Coordinate Converter
Version 1.00

Run date & time = Mon Nov 16 17:24:32 2009

Input Northing Offset = 319966.390000
Input Easting Offset = 180009.440000
Input Bearing = S 24 39 52.0000 W

DESCRIPTION

Units:feet;
Project:100009694;Subaccount:PBS&J;
Designer:SA;Detailer:ES;
Location:CO;
SB Santa Fe to EB C-470 Ramp
Concrete Two U70 Special Girders Alternative

HORIZONTAL ALIGNMENT DATA

PC	716+48.7161	T	1363.9939			
PI	730+12.7100	Lc	1772.2845	DELTA 113 27 26.00 LT	Dc 6 24 06.30	RADIUS 895.001828
PT	734+21.0006	T	1363.9939			

VERTICAL ALIGNMENT DATA

ELEVATION AT PI	ELEVATION AT GRADE	STATION		ELEVATION AT GRADE	ELEVATION AT PI	PERCENT GRADE
						4.000000
		726+09.1200	PC	5467.8748		
		727+80.0000	PI	5471.3533	5474.7100	
		729+50.8800	PT	5468.1186		
						-3.857353
	5461.9807	PC	731+10.0000			
5448.4800	5456.2302	PI	734+60.0000			
	5465.9800	PT	738+10.0000			
						5.000000

TABLE OF ROADWAY CROSS-SLOPES (SUPERELEVATION: E= -NC-)

STATION	SLOPE LEFT	SLOPE RIGHT	VC LENGTH
(ON TANGENT)	-0.0500	0.0500	50.00 (MAX)
715+86.9200	0.0000	0.0000	50.00 -U-
716+89.9200	-0.0500	0.0500	50.00 -U-
733+79.8000	-0.0500	0.0500	50.00 -U-
734+41.6000	-0.0200	0.0200	50.00 -U-

OFFSET PROFILE CONTROL TO PIVOT POINT = 0.0000 FEET

LIMITS OF VALID ELEVATION AND CROSS-SLOPE DATA

BEGIN	END
716+11.9200	734+16.6000
SUPERELEVATION	SUPERELEVATION

TYPE 4 GIRDER LINE DATA
(OFFSET VARIES WITH SUPER)

LINE OF CONSTANT OFFSET IS HORIZONTAL CONTROL

AVERAGE CROSS-SLOPE CALCULATED BETWEEN STATION 716+48.7200
AND STATION 733+72.5530

AVERAGE CROSS-SLOPE = 0.049726 FT/FT (RIGHT OF PROFILE CONTROL LINE)

DEAD LOAD DEFLECTION DATA

DEFLECTIONS AT TENTH POINTS FROM FITTED CURVE

	0.0	0.1	0.2	0.3	0.4	0.5	0.6	0.7	0.8	0.9	1.0		
FOR BENT LINE: AH BRG 1					07 CARD(S): 1		GIRDER LINES REFERENCED BY: A						
													A4= 0.00000
INCH	0.0000	1.3680	2.4320	3.1920	3.6480	3.8000	3.6480	3.1920	2.4320	1.3680	0.0000	INCH	A3= 0.00000
FOOT	0.0000	0.1140	0.2027	0.2660	0.3040	0.3167	0.3040	0.2660	0.2027	0.1140	0.0000	FOOT	A2= 0.00000
													A1= 0.00000
SLOPE	1.266667										-1.266667	SLOPE	A0=-15.2000
FOR BENT LINE: AH BRG 1					07 CARD(S): 1		GIRDER LINES REFERENCED BY: B						
													A4= 0.00000
INCH	0.0000	1.2600	2.2400	2.9400	3.3600	3.5000	3.3600	2.9400	2.2400	1.2600	0.0000	INCH	A3= 0.00000
FOOT	0.0000	0.1050	0.1867	0.2450	0.2800	0.2917	0.2800	0.2450	0.1867	0.1050	0.0000	FOOT	A2= 0.00000
													A1= 0.00000
SLOPE	1.166667										-1.166667	SLOPE	A0=-14.0000
FOR BENT LINE: AH BRG 2					07 CARD(S): 1		GIRDER LINES REFERENCED BY: A						
													A4= 0.00000
INCH	0.0000	0.4320	0.7680	1.0080	1.1520	1.2000	1.1520	1.0080	0.7680	0.4320	0.0000	INCH	A3= 0.00000
FOOT	0.0000	0.0360	0.0640	0.0840	0.0960	0.1000	0.0960	0.0840	0.0640	0.0360	0.0000	FOOT	A2= 0.00000
													A1= 0.00000
SLOPE	0.400000										-0.400000	SLOPE	A0=-4.80000
FOR BENT LINE: AH BRG 2					07 CARD(S): 1		GIRDER LINES REFERENCED BY: B						
													A4= 0.00000
INCH	0.0000	0.3960	0.7040	0.9240	1.0560	1.1000	1.0560	0.9240	0.7040	0.3960	0.0000	INCH	A3= 0.00000
FOOT	0.0000	0.0330	0.0587	0.0770	0.0880	0.0917	0.0880	0.0770	0.0587	0.0330	0.0000	FOOT	A2= 0.00000
													A1= 0.00000
SLOPE	0.366667										-0.366667	SLOPE	A0=-4.40000
FOR BENT LINE: AH BRG 3					07 CARD(S): 1		GIRDER LINES REFERENCED BY: A						
													A4= 0.00000
INCH	0.0000	1.0440	1.8560	2.4360	2.7840	2.9000	2.7840	2.4360	1.8560	1.0440	0.0000	INCH	A3= 0.00000
FOOT	0.0000	0.0870	0.1547	0.2030	0.2320	0.2417	0.2320	0.2030	0.1547	0.0870	0.0000	FOOT	A2= 0.00000
													A1= 0.00000
SLOPE	0.966667										-0.966667	SLOPE	A0=-11.6000
FOR BENT LINE: AH BRG 3					07 CARD(S): 1		GIRDER LINES REFERENCED BY: B						
													A4= 0.00000
INCH	0.0000	0.9720	1.7280	2.2680	2.5920	2.7000	2.5920	2.2680	1.7280	0.9720	0.0000	INCH	A3= 0.00000
FOOT	0.0000	0.0810	0.1440	0.1890	0.2160	0.2250	0.2160	0.1890	0.1440	0.0810	0.0000	FOOT	A2= 0.00000
													A1= 0.00000
SLOPE	0.900000										-0.900000	SLOPE	A0=-10.8000

NOTES:

Elevations are at top of bridge deck. Approximately 3 inches below finished grade.

Positive roadway cross slope is upwards from the profile grade line.

These stations, coordinates, offsets, and lengths define the layout of the structure in a two dimensional horizontal plane. Elevations define the final grade of the finished concrete deck. Fabrication of structural components through the direct use of this information is not intended or advisable.

Revision Dates	MM/YY
(Preliminary Stage Only)	

Quantities	INITIAL	DATE
Quantities By		
Checked By		

Detail	INITIAL	DATE
Detailed By	ERS	11/09
Checked By	KCS	12/09

Design	INITIAL	DATE
Designed By	SA	11/09
Checked By		

18026 1:54:36 PM S:\Tranproj\100002375\14679\Consultants\Bridge\Drawings\14679_pBD-N705.dgn

Print Date: 12/31/2009
File Name: 14679_pBD-N705.dgn
Horiz. Scale: 1:1 Vert. Scale: As Noted
Staff Bridge Branch - Unit 0224 Unit Leader: MH

PBSJ 4601 DTC Boulevard Suite 700 Denver, CO 80237

Sheet Revisions		
Date:	Comments	Init.

Colorado Department of Transportation
CDOT DEPARTMENT OF TRANSPORTATION
8833 South Wadsworth Court
Littleton, CO 80128
Phone: 303-972-9112 FAX: 303-972-9114
Region 6 RLB

As Constructed
No Revisions:
Revised:
Void:

SB SANTA FE TO EB C470 RAMP
BRIDGE DECK ELEVATIONS
(1 OF 13)

Designer: S. Abraham
Detailer: E. Schawo
Structure Numbers: F-16-YE
Sheet Subset: Bridge
Subset Sheets: B60 of 72

Project No./Code
ES6 0852-103
17679
Sheet Number 249

FOR BENT LINE: AH BRG 4 07 CARD(S): 1 GIRDER LINES REFERENCED BY: A

													A4= 0.00000
INCH	0.0000	2.5560	4.5440	5.9640	6.8160	7.1000	6.8160	5.9640	4.5440	2.5560	0.0000	INCH	A3= 0.00000
FOOT	0.0000	0.2130	0.3787	0.4970	0.5680	0.5917	0.5680	0.4970	0.3787	0.2130	0.0000	FOOT	A2= 0.00000
													A1= 0.00000
SLOPE	2.366667										-2.366667	SLOPE	A0=-28.4000

FOR BENT LINE: AH BRG 4 07 CARD(S): 1 GIRDER LINES REFERENCED BY: B

													A4= 0.00000
INCH	0.0000	2.3760	4.2240	5.5440	6.3360	6.6000	6.3360	5.5440	4.2240	2.3760	0.0000	INCH	A3= 0.00000
FOOT	0.0000	0.1980	0.3520	0.4620	0.5280	0.5500	0.5280	0.4620	0.3520	0.1980	0.0000	FOOT	A2= 0.00000
													A1= 0.00000
SLOPE	2.200000										-2.200000	SLOPE	A0=-26.4000

FOR BENT LINE: AH BRG 5 07 CARD(S): 1 GIRDER LINES REFERENCED BY: A

													A4= 0.00000
INCH	0.0000	2.1960	3.9040	5.1240	5.8560	6.1000	5.8560	5.1240	3.9040	2.1960	0.0000	INCH	A3= 0.00000
FOOT	0.0000	0.1830	0.3253	0.4270	0.4880	0.5083	0.4880	0.4270	0.3253	0.1830	0.0000	FOOT	A2= 0.00000
													A1= 0.00000
SLOPE	2.033333										-2.033333	SLOPE	A0=-24.4000

FOR BENT LINE: AH BRG 5 07 CARD(S): 1 GIRDER LINES REFERENCED BY: B

													A4= 0.00000
INCH	0.0000	2.0160	3.5840	4.7040	5.3760	5.6000	5.3760	4.7040	3.5840	2.0160	0.0000	INCH	A3= 0.00000
FOOT	0.0000	0.1680	0.2987	0.3920	0.4480	0.4667	0.4480	0.3920	0.2987	0.1680	0.0000	FOOT	A2= 0.00000
													A1= 0.00000
SLOPE	1.866667										-1.866667	SLOPE	A0=-22.4000

FOR BENT LINE: AH BRG 6 07 CARD(S): 1 GIRDER LINES REFERENCED BY: A

													A4= 0.00000
INCH	0.0000	1.8720	3.3280	4.3680	4.9920	5.2000	4.9920	4.3680	3.3280	1.8720	0.0000	INCH	A3= 0.00000
FOOT	0.0000	0.1560	0.2773	0.3640	0.4160	0.4333	0.4160	0.3640	0.2773	0.1560	0.0000	FOOT	A2= 0.00000
													A1= 0.00000
SLOPE	1.733333										-1.733333	SLOPE	A0=-20.8000

FOR BENT LINE: AH BRG 6 07 CARD(S): 1 GIRDER LINES REFERENCED BY: B

													A4= 0.00000
INCH	0.0000	1.7640	3.1360	4.1160	4.7040	4.9000	4.7040	4.1160	3.1360	1.7640	0.0000	INCH	A3= 0.00000
FOOT	0.0000	0.1470	0.2613	0.3430	0.3920	0.4083	0.3920	0.3430	0.2613	0.1470	0.0000	FOOT	A2= 0.00000
													A1= 0.00000
SLOPE	1.633333										-1.633333	SLOPE	A0=-19.6000

FOR BENT LINE: AH BRG 7 07 CARD(S): 1 GIRDER LINES REFERENCED BY: A

													A4= 0.00000
INCH	0.0000	1.8720	3.3280	4.3680	4.9920	5.2000	4.9920	4.3680	3.3280	1.8720	0.0000	INCH	A3= 0.00000
FOOT	0.0000	0.1560	0.2773	0.3640	0.4160	0.4333	0.4160	0.3640	0.2773	0.1560	0.0000	FOOT	A2= 0.00000
													A1= 0.00000
SLOPE	1.733333										-1.733333	SLOPE	A0=-20.8000

FOR BENT LINE: AH BRG 7 07 CARD(S): 1 GIRDER LINES REFERENCED BY: B

													A4= 0.00000
INCH	0.0000	1.7640	3.1360	4.1160	4.7040	4.9000	4.7040	4.1160	3.1360	1.7640	0.0000	INCH	A3= 0.00000
FOOT	0.0000	0.1470	0.2613	0.3430	0.3920	0.4083	0.3920	0.3430	0.2613	0.1470	0.0000	FOOT	A2= 0.00000
													A1= 0.00000
SLOPE	1.633333										-1.633333	SLOPE	A0=-19.6000

FOR BENT LINE: AH BRG 8 07 CARD(S): 1 GIRDER LINES REFERENCED BY: A

													A4= 0.00000
INCH	0.0000	2.1960	3.9040	5.1240	5.8560	6.1000	5.8560	5.1240	3.9040	2.1960	0.0000	INCH	A3= 0.00000
FOOT	0.0000	0.1830	0.3253	0.4270	0.4880	0.5083	0.4880	0.4270	0.3253	0.1830	0.0000	FOOT	A2= 0.00000
													A1= 0.00000
SLOPE	2.033333										-2.033333	SLOPE	A0=-24.4000

FOR BENT LINE: AH BRG 8 07 CARD(S): 1 GIRDER LINES REFERENCED BY: B

													A4= 0.00000
INCH	0.0000	2.0160	3.5840	4.7040	5.3760	5.6000	5.3760	4.7040	3.5840	2.0160	0.0000	INCH	A3= 0.00000
FOOT	0.0000	0.1680	0.2987	0.3920	0.4480	0.4667	0.4480	0.3920	0.2987	0.1680	0.0000	FOOT	A2= 0.00000
													A1= 0.00000
SLOPE	1.866667										-1.866667	SLOPE	A0=-22.4000

FOR BENT LINE: AH BRG 9 07 CARD(S): 1 GIRDER LINES REFERENCED BY: A

													A4= 0.00000
INCH	0.0000	2.2320	3.9680	5.2080	5.9520	6.2000	5.9520	5.2080	3.9680	2.2320	0.0000	INCH	A3= 0.00000
FOOT	0.0000	0.1860	0.3307	0.4340	0.4960	0.5167	0.4960	0.4340	0.3307	0.1860	0.0000	FOOT	A2= 0.00000
													A1= 0.00000
SLOPE	2.066667										-2.066667	SLOPE	A0=-24.8000

FOR BENT LINE: AH BRG 9 07 CARD(S): 1 GIRDER LINES REFERENCED BY: B

													A4= 0.00000
INCH	0.0000	2.0520	3.6480	4.7880	5.4720	5.7000	5.4720	4.7880	3.6480	2.0520	0.0000	INCH	A3= 0.00000
FOOT	0.0000	0.1710	0.3040	0.3990	0.4560	0.4750	0.4560	0.3990	0.3040	0.1710	0.0000	FOOT	A2= 0.00000
													A1= 0.00000
SLOPE	1.900000										-1.900000	SLOPE	A0=-22.8000

FOR BENT LINE: AH BRG 10 07 CARD(S): 1 GIRDER LINES REFERENCED BY: A

													A4= 0.00000
INCH	0.0000	2.3040	4.0960	5.3760	6.1440	6.4000	6.1440	5.3760	4.0960	2.3040	0.0000	INCH	A3= 0.00000
FOOT	0.0000	0.1920	0.3413	0.4480	0.5120	0.5333	0.5120	0.4480	0.3413	0.1920	0.0000	FOOT	A2= 0.00000
													A1= 0.00000
SLOPE	2.133333										-2.133333	SLOPE	A0=-25.6000

FOR BENT LINE: AH BRG 10 07 CARD(S): 1 GIRDER LINES REFERENCED BY: B

													A4= 0.00000
INCH	0.0000	2.0880	3.7120	4.8720	5.5680	5.8000	5.5680	4.8720	3.7120	2.0880	0.0000	INCH	A3= 0.00000
FOOT	0.0000	0.1740	0.3093	0.4060	0.4640	0.4833	0.4640	0.4060	0.3093	0.1740	0.0000	FOOT	A2= 0.00000
													A1= 0.00000
SLOPE	1.933333										-1.933333	SLOPE	A0=-23.2000

FOR BENT LINE: AH BRG 11 07 CARD(S): 1 GIRDER LINES REFERENCED BY: A

													A4= 0.00000
INCH	0.0000	1.2240	2.1760	2.8560	3.2640	3.4000	3.2640	2.8560	2.1760	1.2240	0.0000	INCH	A3= 0.00000
FOOT	0.0000	0.1020	0.1813	0.2380	0.2720	0.2833	0.2720	0.2380	0.1813	0.1020	0.0000	FOOT	A2= 0.00000
													A1= 0.00000
SLOPE	1.133333										-1.133333	SLOPE	A0=-13.6000

NOTES:

See Sheet B60 for notes.

Revision Dates	
Revision	MM/YY

Quantities		
	INITIAL	DATE
Quantities By		
Checked By		

Detail		
	INITIAL	DATE
Detailed By	ERS	11/09
Checked By	KCS	12/09

Design		
	INITIAL	DATE
Designed By	SA	11/09
Checked By		

(Preliminary Stage Only)

18026 1:54:36 PM S:\Tranproj\100002375\14679\Consultants\Bridge\Drawings\14679_pBD-N705.dgn

Print Date: 12/31/2009
File Name: 14679_pBD-N705.dgn
Horiz. Scale: 1:1 Vert. Scale: As Noted
Staff Bridge Branch - Unit 0224 Unit Leader: MH

PBSJ 4601 DTC Boulevard Suite 700 Denver, CO 80237

Sheet Revisions		
Date:	Comments	Init.

Colorado Department of Transportation
DOT DEPARTMENT OF TRANSPORTATION
8833 South Wadsworth Court
Littleton, CO 80128
Phone: 303-972-9112 FAX: 303-972-9114
Region 6 RLB

As Constructed
No Revisions:
Revised:
Void:

SB SANTA FE TO EB C470 RAMP
BRIDGE DECK ELEVATIONS
(2 OF 13)

Designer: S. Abraham
Detailer: E. Schawo
Sheet Subset: Bridge
Structure Numbers: F-16-YE
Subset Sheets: B61 of 72

Project No./Code
ES6 0852-103
17679
Sheet Number 250

FOR BENT LINE: AH BRG 11 07 CARD(S): 1 GIRDER LINES REFERENCED BY: B

INCH	0.0000	1.1520	2.0480	2.6880	3.0720	3.2000	3.0720	2.6880	2.0480	1.1520	0.0000	INCH	A4= 0.00000 A3= 0.00000
FOOT	0.0000	0.0960	0.1707	0.2240	0.2560	0.2667	0.2560	0.2240	0.1707	0.0960	0.0000	FOOT	A2= 0.00000 A1= 0.00000
SLOPE	1.066667										-1.066667	SLOPE	A0=-12.8000

FOR BENT LINE: AH BRG 12 07 CARD(S): 1 GIRDER LINES REFERENCED BY: A

INCH	0.0000	0.4680	0.8320	1.0920	1.2480	1.3000	1.2480	1.0920	0.8320	0.4680	0.0000	INCH	A4= 0.00000 A3= 0.00000
FOOT	0.0000	0.0390	0.0693	0.0910	0.1040	0.1083	0.1040	0.0910	0.0693	0.0390	0.0000	FOOT	A2= 0.00000 A1= 0.00000
SLOPE	0.433333										-0.433333	SLOPE	A0=-5.20000

FOR BENT LINE: AH BRG 12 07 CARD(S): 1 GIRDER LINES REFERENCED BY: B

INCH	0.0000	0.4320	0.7680	1.0080	1.1520	1.2000	1.1520	1.0080	0.7680	0.4320	0.0000	INCH	A4= 0.00000 A3= 0.00000
FOOT	0.0000	0.0360	0.0640	0.0840	0.0960	0.1000	0.0960	0.0840	0.0640	0.0360	0.0000	FOOT	A2= 0.00000 A1= 0.00000
SLOPE	0.400000										-0.400000	SLOPE	A0=-4.80000

BENT LINE DESCRIPTION	INTERSECTION POINT STATION	OFFSET	ELEVATION		PROJECT COORDINATES NORTHING	EASTING	GIRDER LINE LENGTH FROM REF LINE	ROADWAY CROSS-SLOPE
HORIZONTAL CONTROL LINE			AT FINISHED GRADE					
STA A SLAB	716+18.7200	0.0000	5428.2588	1	319993.6530	180021.9591	-30.0000	+/-.015437
STA BRIDGE	716+48.7200	0.0000	5429.4588	1	319966.3900	180009.4400	0.0000	+/-.030000
CL PIER 1	716+53.7200	0.0000	5429.6588	1	319961.8403	180007.3662	5.0000	+/-.032427
AH BRG 1	716+56.7200	0.0000	5429.7788	10	319959.1050	180006.1341	8.0000	+/-.033883
BK BRG 2	717+84.2200	0.0000	5434.8788	1	319839.4496	179962.4153	135.5000	+/-.050000
CL PIER 2	717+87.2200	0.0000	5434.9988	1	319836.5642	179961.5938	138.5000	+/-.050000
AH BRG 2	717+90.2200	0.0000	5435.1188	10	319833.6762	179960.7818	141.5000	+/-.050000
BK BRG 3	718+94.2200	0.0000	5439.2788	1	319732.1117	179938.6802	245.5000	+/-.050000
CL PIER 3	718+97.2200	0.0000	5439.3988	1	319729.1474	179938.2186	248.5000	+/-.050000
AH BRG 3	719+00.2200	0.0000	5439.5188	10	319726.1816	179937.7668	251.5000	+/-.050000
BK BRG 4	720+26.2200	0.0000	5444.5588	1	319600.6790	179927.8220	377.5000	+/-.050000
CL PIER 4	720+29.2200	0.0000	5444.6788	1	319597.6791	179927.8009	380.5000	+/-.050000
AH BRG 4	720+32.2200	0.0000	5444.7988	10	319594.6791	179927.7900	383.5000	+/-.050000
BK BRG 5	721+91.2200	0.0000	5451.1588	1	319436.4866	179941.5630	542.5000	+/-.050000
CL PIER 5	721+94.2200	0.0000	5451.2788	1	319433.5336	179942.0923	545.5000	+/-.050000
AH BRG 5	721+97.2200	0.0000	5451.3988	10	319430.5825	179942.6314	548.5000	+/-.050000
BK BRG 6	723+51.2200	0.0000	5457.5588	1	319282.2797	179983.4217	702.5000	+/-.050000
CL PIER 6	723+54.2200	0.0000	5457.6788	1	319279.4680	179984.4675	705.5000	+/-.050000
AH BRG 6	723+57.2200	0.0000	5457.7988	10	319276.6597	179985.5229	708.5000	+/-.050000
BK BRG 7	724+98.8870	0.0000	5463.4655	1	319148.6376	180045.8386	850.1670	+/-.050000
CL PIER 7	725+01.8870	0.0000	5463.5855	1	319146.0357	180047.3322	853.1670	+/-.050000
AH BRG 7	725+04.8870	0.0000	5463.7055	10	319143.4389	180048.8344	856.1670	+/-.050000
BK BRG 8	726+46.5530	0.0000	5469.2110	1	319027.0626	180129.3572	997.8330	+/-.050000
CL PIER 8	726+49.5530	0.0000	5469.3042	1	319024.7414	180131.2579	1000.8330	+/-.050000
AH BRG 8	726+52.5530	0.0000	5469.3953	10	319022.4266	180133.1662	1003.8330	+/-.050000
BK BRG 9	728+06.5530	0.0000	5471.2912	1	318912.7742	180241.0267	1157.8330	+/-.050000
CL PIER 9	728+09.5530	0.0000	5471.2740	1	318910.8280	180243.3098	1160.8330	+/-.050000
AH BRG 9	728+12.5530	0.0000	5471.2547	10	318908.8895	180245.5993	1163.8330	+/-.050000
BK BRG 10	729+66.5530	0.0000	5467.5140	1	318820.1644	180371.2393	1317.8330	+/-.050000
CL PIER 10	729+69.5530	0.0000	5467.3983	1	318818.6552	180373.8321	1320.8330	+/-.050000
AH BRG 10	729+72.5530	0.0000	5467.2826	10	318817.1547	180376.4298	1323.8330	+/-.050000
BK BRG 11	731+26.5530	0.0000	5461.3596	1	318752.1849	180515.8445	1477.8330	+/-.050000
CL PIER 11	731+29.5530	0.0000	5461.2507	1	318751.1607	180518.6643	1480.8330	+/-.050000
AH BRG 11	731+32.5530	0.0000	5461.1430	10	318750.1460	180521.4876	1483.8330	+/-.050000
BK BRG 12	732+64.5530	0.0000	5457.5303	1	318715.0184	180648.6035	1615.8330	+/-.050000
CL PIER 12	732+67.5530	0.0000	5457.4738	1	318714.4395	180651.5472	1618.8330	+/-.050000
AH BRG 12	732+70.5530	0.0000	5457.4185	10	318713.8704	180654.4927	1621.8330	+/-.050000
BK BRG 13	733+69.5530	0.0000	5456.2310	1	318700.6645	180752.5571	1720.8330	+/-.048943
CL PIER 13	733+72.5530	0.0000	5456.2144	1	318700.4341	180755.5482	1723.8330	+/-.048470

HORIZONTAL CONTROL LINE (CONT.) AT FINISHED GRADE

BENT LINE	STATION	OFFSET	ELEVATION	ELEV+DL	NORTHING	EASTING	GIRDER LNTH	CRS-SLP
END BRIDGE	733+77.5530	0.0000	5456.1892	1	318700.0723	180760.5351	1728.8330	+/-.047487
END A SLAB	734+07.5530	0.0000	5456.1046	1	318698.4875	180790.4918	1758.8330	+/-.036528

LEFT OUT DECK PARALLEL TO HORIZONTAL CONTROL 0.250000 FEET BELOW FINISHED GRADE

BENT LINE	STATION	OFFSET	ELEVATION	ELEV+DL	NORTHING	EASTING	GIRDER LNTH	CRS-SLP
STA A SLAB	716+18.7200	-23.5000	5427.6460		319983.8464	180043.3151	-29.9999	-0.015437
STA BRIDGE	716+48.7200	-23.5000	5428.5038		319956.5835	180030.7961	0.0000	-0.030000
CL PIER 1	716+53.7200	-23.5000	5428.6468		319952.1533	180028.7767	4.8687	-0.032427
AH BRG 1	716+56.7200	-23.5000	5428.7325		319949.4898	180027.5770	7.7899	-0.033883
F-1	716+69.4700	-23.5000	5429.0995		319938.1255	180022.5781	20.2052	-0.039972
F-2	716+82.2200	-23.5000	5429.4958		319926.6912	180017.7415	32.6204	-0.044809
F-3	716+94.9700	-23.5000	5429.9292		319915.1892	180013.0684	45.0356	-0.048068
F-4	717+07.7200	-23.5000	5430.3997		319903.6218	180008.5595	57.4508	-0.049748
F-5	717+20.4700	-23.5000	5430.9038		319891.9913	180004.2159	69.8661	-0.050000
F-6	717+33.2200	-23.5000	5431.4138		319880.3001	180000.0384	82.2813	-0.050000
F-7	717+45.9700	-23.5000	5431.9238		319868.5506	179996.0279	94.6965	-0.050000
F-8	717+58.7200	-23.5000	5432.4338		319856.7452	179992.1852	107.1117	-0.050000
F-9	717+71.4700	-23.5000	5432.9438		319844.8861	179988.5109	19.5270	-0.050000
BK BRG 2	717+84.2200	-23.5000	5433.4538		319832.9761	179985.0061	131.9422	-0.050000
CL PIER 2	717+87.2200	-23.5000	5433.5738		319830.1666	179984.2061	134.8634	-0.050000
AH BRG 2	717+90.2200	-23.5000	5433.6938		319827.3543	179983.4155	137.7846	-0.050000
F-1	718+00.6200	-23.5000	5434.1098		319817.5851	179980.7479	147.9116	-0.050000
F-2	718+11.0200	-23.5000	5434.5258		319807.7855	179978.1940	158.0385	-0.050000
F-3	718+21.4200	-23.5000	5434.9418		319797.9570	179975.7542	168.1654	-0.050000
F-4	718+31.8200	-23.5000	5435.3578		319788.1007	179973.4287	178.2924	-0.050000
F-5	718+42.2200	-23.5000	5435.7738		319778.2181	179971.2180	188.4193	-0.050000
F-6	718+52.6200	-23.5000	5436.1898		319768.3104	179969.1222	198.5462	-0.050000
F-7	718+63.0200	-23.5000	5436.6058		319758.3792	179967.1416	208.6731	-0.050000
F-8	718+73.4200	-23.5000	5437.0218		319748.4255	179965.2767	218.8001	-0.050000
F-9	718+83.8200	-23.5000	5437.4378		319738.4509	179963.5274	228.9270	-0.050000
BK BRG 3	718+94.2200	-23.5000	5437.8538		319728.4565	179961.8942	239.0539	-0.050000
CL PIER 3	718+97.2200	-23.5000	5437.9738		319725.5701	179961.4448	241.9752	-0.050000
AH BRG 3	719+00.2200	-23.5000	5438.0938		319722.6822	179961.0049	244.8964	-0.050000
F-1	719+12.8200	-23.5000	5438.5978		319710.5374	179959.2633	257.1655	-0.050000
F-2	719+25.4200	-23.5000	5439.1018		319698.3692	179957.6929	269.4347	-0.050000
F-3	719+38.0200	-23.5000	5439.6058		319686.1801	179956.2940	281.7039	-0.050000
F-4	719+50.6200	-23.5000	5440.1098		319673.9726	179955.0668	293.9730	-0.050000
F-5	719+63.2200	-23.5000	5440.6138		319661.7490	179954.0116	306.2422	-0.050000
F-6	719+75.8200	-23.5000	5441.1178		319649.5118	179953.1285	318.5114	-0.050000
F-7	719+88.4200	-23.5000	5441.6218		319637.2633	179952.4178	330.7805	-0.050000
F-8	720+01.0200	-23.5000	5442.1258		319625.0061	179951.8796	343.0497	-0.050000
F-9	720+13.6200	-23.5000	5442.6298		319612.7425	179951.5140	355.3188	-0.050000
BK BRG 4	720+26.2200	-23.5000	5443.1338		319600.4749	179951.3211	367.5880	-0.050000
CL PIER 4	720+29.2200	-23.5000	5443.2538		319597.5537	179951.3006	370.5092	-0.050000
AH BRG 4	720+32.2200	-23.5000	5443.3738		319594.6326	179951.2899	373.4305	-0.050000
F-1	720+48.1200	-23.5000	5444.0098		319579.1506	179951.3968	388.9130	-0.050000
F-2	720+64.0200	-23.5000	5444.6458		319563.6730	179951.7786	404.3955	-0.050000
F-3	720+79.9200	-23.5000	5445.2818		319548.2046	179952.4354	419.8780	-0.050000
F-4	720+95.8200	-23.5000	5445.9178		319532.7504	179953.3669	435.3605	-0.050000
F-5	721+11.7200	-23.5000	5446.5538		319517.3151	179954.5727	450.8430	-0.050000
F-6	721+27.6200	-23.5000	5447.1898		319501.9037	179956.0525	466.3256	-0.050000
F-7	721+43.5200	-23.5000	5447.8258		319486.5209	179957.8059	481.8081	-0.050000
F-8	721+59.4200	-23.5000	5448.4618		319471.1718	179959.8322	497.2906	-0.050000
F-9	721+75.3200	-23.5000	5449.0978		319455.8611	179962.1309	512.7731	-0.050000
BK BRG 5	721+91.2200	-23.5000	5449.7338		319440.5937	179964.7013	528.2556	-0.050000
CL PIER 5	721+94.2200	-23.5000	5449.8538		319437.7183	179965.2167	531.1768	-0.050000
AH BRG 5	721+97.2200	-23.5000	5449.9738		319434.8445	179965.7417	534.0981	-0.050000
F-1	722+12.6200	-23.5000	5450.5898		319420.1218	179968.5881	549.0937	-0.050000
F-2	722+28.0200	-23.5000	5451.2058		319405.4501	179971.6875	564.0894	-0.050000
F-3	722+43.4200	-23.5000	5451.8218		319390.8339	179975.0388	579.0850	-0.050000
F-4	722+58.8200	-23.5000	5452.4378		319376.2776	179978.6411	594.0806	-0.050000
F-5	722+74.2200	-23.5000	5453.0538		319361.7854	179982.4934	609.0763	-0.050000

NOTES:

See Sheet B60 for notes.

Quantities			
Detail	INITIAL	DATE	
Designed By	ERS	11/09	Quantities By
Checked By	KCS	12/09	Checked By
Design	INITIAL	DATE	
Designed By	SA	11/09	Detailed By
Checked By			Checked By

Revision Dates (Preliminary Stage Only)

MM/YY	INITIAL	DATE

18026 1:54:36 PM S:\Tranproj\100002375\14679\Consultants\Bridge\Drawings\14679_pBD-N705.dgn

Print Date: 12/31/2009
File Name: 14679_pBD-N705.dgn
Horiz. Scale: 1:1 Vert. Scale: As Noted
Staff Bridge Branch - Unit 0224 Unit Leader: MH

PBSJ 4601 DTC Boulevard Suite 700 Denver, CO 80237

Sheet Revisions

Date:	Comments	Init.

Colorado Department of Transportation
DOT DEPARTMENT OF TRANSPORTATION
8833 South Wadsworth Court
Littleton, CO 80128
Phone: 303-972-9112 FAX: 303-972-9114
Region 6 RLB

As Constructed
No Revisions:
Revised:
Void:

SB SANTA FE TO EB C470 RAMP
BRIDGE DECK ELEVATIONS
(3 OF 13)

Designer: S. Abraham
Detailer: E. Schawo
Sheet Subset: Bridge
Structure Numbers F-16-YE
Subset Sheets: B62 of 72

Project No./Code
ES6 0852-103
17679
Sheet Number 251

LEFT OUT DECK (CONT.) PARALLEL TO HORIZONTAL CONTROL 0.250000 FEET BELOW FINISHED GRADE

BENT LINE	STATION	OFFSET	ELEVATION	ELEV+DL	NORTHING	EASTING	GIRDER LNTH	CRS-SLP
F-6	722+89.6200	-23.5000	5453.6698		319347.3616	179986.5944	624.0719	-0.050000
F-7	723+05.0200	-23.5000	5454.2858		319333.0106	179990.9430	639.0676	-0.050000
F-8	723+20.4200	-23.5000	5454.9018		319318.7363	179995.5378	654.0632	-0.050000
F-9	723+35.8200	-23.5000	5455.5178		319304.5434	180000.3776	669.0589	-0.050000
BK BRG 6	723+51.2200	-23.5000	5456.1338		319290.4358	180005.4608	684.0545	-0.050000
CL PIER 6	723+54.2200	-23.5000	5456.2538		319287.6979	180006.4793	686.9757	-0.050000
AH BRG 6	723+57.2200	-23.5000	5456.3738		319284.9634	180007.5069	689.8970	-0.050000
F-1	723+71.3867	-23.5000	5456.9405		319272.0976	180012.4832	703.6917	-0.050000
F-2	723+85.5534	-23.5000	5457.5071		319259.3122	180017.6624	717.4864	-0.050000
F-3	723+99.7201	-23.5000	5458.0738		319246.6105	180023.0435	731.2811	-0.050000
F-4	724+13.8868	-23.5000	5458.6405		319233.9955	180028.6249	745.0759	-0.050000
F-5	724+28.0535	-23.5000	5459.2071		319221.4703	180034.4052	758.8706	-0.050000
F-6	724+42.2202	-23.5000	5459.7738		319209.0383	180040.3830	772.6653	-0.050000
F-7	724+56.3869	-23.5000	5460.3405		319196.7024	180046.5569	786.4600	-0.050000
F-8	724+70.5536	-23.5000	5460.9071		319184.4658	180052.9253	800.2548	-0.050000
F-9	724+84.7203	-23.5000	5461.4738		319172.3315	180059.4865	814.0495	-0.050000
BK BRG 7	724+98.8870	-23.5000	5462.0405		319160.3027	180066.2390	827.8442	-0.050000
CL PIER 7	725+01.8870	-23.5000	5462.1605		319157.7691	180067.6933	830.7655	-0.050000
AH BRG 7	725+04.8870	-23.5000	5462.2805		319155.2406	180069.1561	833.6867	-0.050000
F-1	725+19.0536	-23.5000	5462.8471		319143.3669	180076.1779	847.4813	-0.050000
F-2	725+33.2202	-23.5000	5463.4138		319131.6059	180083.3867	861.2759	-0.050000
F-3	725+47.3868	-23.5000	5463.9805		319119.9605	180090.7807	875.0706	-0.050000
F-4	725+61.5534	-23.5000	5464.5471		319108.4336	180098.3582	888.8652	-0.050000
F-5	725+75.7200	-23.5000	5465.1138		319097.0280	180106.1171	902.6598	-0.050000
F-6	725+89.8866	-23.5000	5465.6805		319085.7467	180114.0556	916.4545	-0.050000
F-7	726+04.0532	-23.5000	5466.2471		319074.5924	180122.1716	930.2491	-0.050000
F-8	726+18.2198	-23.5000	5466.8043		319063.5680	180130.4633	944.0437	-0.050000
F-9	726+32.3864	-23.5000	5467.3182		319052.6763	180138.9283	957.8383	-0.050000
BK BRG 8	726+46.5530	-23.5000	5467.7860		319041.9199	180147.5646	971.6330	-0.050000
CL PIER 8	726+49.5530	-23.5000	5467.8792		319039.6596	180149.4154	974.5542	-0.050000
AH BRG 8	726+52.5530	-23.5000	5467.9703		319037.4056	180151.2736	977.4754	-0.050000
F-1	726+67.9530	-23.5000	5468.4052		319025.9338	180160.9308	992.4711	-0.050000
F-2	726+83.3530	-23.5000	5468.7857		319014.6300	180170.7840	1007.4667	-0.050000
F-3	726+98.7530	-23.5000	5469.1116		319003.4973	180180.8303	1022.4624	-0.050000
F-4	727+14.1530	-23.5000	5469.3830		318992.5391	180191.0666	1037.4580	-0.050000
F-5	727+29.5530	-23.5000	5469.5998		318981.7587	180201.4899	1052.4536	-0.050000
F-6	727+44.9530	-23.5000	5469.7621		318971.1591	180212.0971	1067.4493	-0.050000
F-7	727+60.3530	-23.5000	5469.8700		318960.7437	180222.8853	1082.4449	-0.050000
F-8	727+75.7530	-23.5000	5469.9232		318950.5154	180233.8509	1097.4406	-0.050000
F-9	727+91.1530	-23.5000	5469.9220		318940.4773	180244.9910	1112.4362	-0.050000
BK BRG 9	728+06.5530	-23.5000	5469.8662		318930.6324	180256.3020	1127.4319	-0.050000
CL PIER 9	728+09.5530	-23.5000	5469.8490		318928.7373	180258.5251	1130.3531	-0.050000
AH BRG 9	728+12.5530	-23.5000	5469.8297		318926.8497	180260.7546	1133.2743	-0.050000
F-1	728+27.9530	-23.5000	5469.6982		318917.2780	180272.2978	1148.2700	-0.050000
F-2	728+43.3530	-23.5000	5469.5121		318907.9063	180284.0041	1163.2656	-0.050000
F-3	728+58.7530	-23.5000	5469.2716		318898.7375	180295.8699	1178.2612	-0.050000
F-4	728+74.1530	-23.5000	5468.9764		318889.7741	180307.8916	1193.2569	-0.050000
F-5	728+89.5530	-23.5000	5468.6268		318881.0190	180320.0657	1208.2525	-0.050000
F-6	729+04.9530	-23.5000	5468.2227		318872.4746	180332.3888	1223.2482	-0.050000
F-7	729+20.3530	-23.5000	5467.7640		318864.1435	180344.8570	1238.2438	-0.050000
F-8	729+35.7530	-23.5000	5467.2508		318856.0281	180357.4667	1253.2395	-0.050000
F-9	729+51.1530	-23.5000	5466.6830		318848.1309	180370.2142	1268.2351	-0.050000
BK BRG 10	729+66.5530	-23.5000	5466.0890		318840.4543	180383.0956	1283.2308	-0.050000
CL PIER 10	729+69.5530	-23.5000	5465.9733		318838.9847	180385.6203	1286.1520	-0.050000
AH BRG 10	729+72.5530	-23.5000	5465.8576		318837.5236	180388.1498	1289.0732	-0.050000
F-1	729+87.9530	-23.5000	5465.2635		318830.1570	180401.2111	1304.0689	-0.050000
F-2	730+03.3530	-23.5000	5464.6695		318823.0163	180414.3973	1319.0645	-0.050000
F-3	730+18.7530	-23.5000	5464.0755		318816.1035	180427.7043	1334.0601	-0.050000
F-4	730+34.1530	-23.5000	5463.4814		318809.4207	180441.1284	1349.0558	-0.050000
F-5	730+49.5530	-23.5000	5462.8874		318802.9699	180454.6654	1364.0514	-0.050000
F-6	730+64.9530	-23.5000	5462.2934		318796.7530	180468.3114	1379.0471	-0.050000
F-7	730+80.3530	-23.5000	5461.6993		318790.7717	180482.0623	1394.0427	-0.050000
F-8	730+95.7530	-23.5000	5461.1053		318785.0279	180495.9142	1409.0384	-0.050000
F-9	731+11.1530	-23.5000	5460.5113		318779.5233	180509.8628	1424.0340	-0.050000
BK BRG 11	731+26.5530	-23.5000	5459.9346		318774.2596	180523.9040	1439.0296	-0.050000
CL PIER 11	731+29.5530	-23.5000	5459.8257		318773.2624	180526.6497	1441.9509	-0.050000
AH BRG 11	731+32.5530	-23.5000	5459.7180		318772.2743	180529.3988	1444.8721	-0.050000
F-1	731+45.7530	-23.5000	5459.2575		318768.0366	180541.5334	1457.7255	-0.050000
F-2	731+58.9530	-23.5000	5458.8191		318763.9783	180553.7292	1470.5789	-0.050000

LEFT OUT DECK (CONT.) PARALLEL TO HORIZONTAL CONTROL 0.250000 FEET BELOW FINISHED GRADE

BENT LINE	STATION	OFFSET	ELEVATION	ELEV+DL	NORTHING	EASTING	GIRDER LNTH	CRS-SLP
F-3	731+72.1530	-23.5000	5458.4027		318760.1004	180565.9835	1483.4323	-0.050000
F-4	731+85.3530	-23.5000	5458.0083		318756.4036	180578.2937	1496.2857	-0.050000
F-5	731+98.5530	-23.5000	5457.6360		318752.8887	180590.6571	1509.1391	-0.050000
F-6	732+11.7530	-23.5000	5457.2858		318749.5565	180603.0709	1521.9926	-0.050000
F-7	732+24.9530	-23.5000	5456.9576		318746.4079	180615.5326	1534.8460	-0.050000
F-8	732+38.1530	-23.5000	5456.6515		318743.4433	180628.0393	1547.6994	-0.050000
F-9	732+51.3530	-23.5000	5456.3674		318740.6635	180640.5885	1560.5528	-0.050000
BK BRG 12	732+64.5530	-23.5000	5456.1053		318738.0691	180653.1772	1573.4062	-0.050000
CL PIER 12	732+67.5530	-23.5000	5456.0488		318737.5054	180656.0435	1576.3274	-0.050000
AH BRG 12	732+70.5530	-23.5000	5455.9935		318736.9512	180658.9117	1579.2486	-0.050000
F-1	732+80.4530	-23.5000	5455.8189		318735.1909	180668.3896	1588.8887	-0.050000
F-2	732+90.3530	-23.5000	5455.6568		318733.5354	180677.8864	1598.5288	-0.050000
F-3	733+00.2530	-23.5000	5455.5070		318731.9853	180687.4009	1608.1688	-0.050000
F-4	733+10.1530	-23.5000	5455.3697		318730.5404	180696.9320	1617.8089	-0.050000
F-5	733+20.0530	-23.5000	5455.2447		318729.2010	180706.4786	1627.4489	-0.050000
F-6	733+29.9530	-23.5000	5455.1322		318727.9673	180716.0393	1637.0890	-0.050000
F-7	733+39.8530	-23.5000	5455.0320		318726.8395	180725.6131	1646.7290	-0.050000
F-8	733+49.7530	-23.5000	5454.9443		318725.8175	180735.1988	1656.3691	-0.050000
F-9	733+59.6530	-23.5000	5454.8716		318724.9017	180744.7952	1666.0092	-0.049886
BK BRG 13	733+69.5530	-23.5000	5454.8308		318724.0920	180754.4012	1675.6492	-0.048943
CL PIER 13	733+72.5530	-23.5000	5454.8253		318723.8677	180757.3138	1678.5704	-0.048470
END BRIDGE	733+77.5530	-23.5000	5454.8233		318723.5155	180762.1697	1683.4392	-0.047487
END A SLAB	734+07.5530	-23.5000	5454.9962		318721.9722	180791.3398	1712.6514	-0.036528

LEFT FLOWLINE PARALLEL TO HORIZONTAL CONTROL 0.250000 FEET BELOW FINISHED GRADE

BENT LINE	STATION	OFFSET	ELEVATION	ELEV+DL	NORTHING	EASTING	GIRDER LNTH	CRS-SLP
STA A SLAB	716+18.7200	-22.0000	5427.6692		319984.4723	180041.9520	-29.9999	-0.015437
STA BRIDGE	716+48.7200	-22.0000	5428.5488		319957.2094	180029.4329	0.0000	-0.030000
CL PIER 1	716+53.7200	-22.0000	5428.6954		319952.7716	180027.4101	4.8771	-0.032427
AH BRG 1	716+56.7200	-22.0000	5428.7834		319950.1035	180026.2083	7.8034	-0.033883
F-1	716+69.4700	-22.0000	5429.1594		319938.7198	180021.2008	20.2399	-0.039972
F-2	716+82.2200	-22.0000	5429.5630		319927.2658	180016.3559	32.6765	-0.044809
F-3	716+94.9700	-22.0000	5430.0013		319915.7439	180011.6747	45.1131	-0.048068
F-4	717+07.7200	-22.0000	5430.4743		319904.1566	180007.1581	57.5497	-0.049748
F-5	717+20.4700	-22.0000	5430.9788		319892.5061	180002.8069	69.9863	-0.050000
F-6	717+33.2200	-22.0000	5431.4888		319880.7948	179998.6223	82.4229	-0.050000
F-7	717+45.9700	-22.0000	5431.9988		319869.0251	179994.6049	94.8595	-0.050000
F-8	717+58.7200	-22.0000	5432.5088		319857.1993	179990.7555	107.2961	-0.050000
F-9	717+71.4700	-22.0000	5433.0188		319845.3199	179987.0751	119.7327	-0.050000
BK BRG 2	717+84.2200	-22.0000	5433.5288		319833.3893	179983.5641	132.1693	-0.050000
CL PIER 2	717+87.2200	-22.0000	5433.6488		319830.5749	179982.7627	135.0955	-0.050000
AH BRG 2	717+90.2200	-22.0000	5433.7688		319827.7578	179981.9708	138.0218	-0.050000
F-1	718+00.6200	-22.0000	5434.1848		319817.9718	179979.2986	148.1662	-0.050000
F-2	718+11.0200	-22.0000	5434.6008		319808.1554	179976.7403	158.3105	-0.050000
F-3	718+21.4200	-22.0000	5435.0168		319798.3099	179974.2963	168.4549	-0.050000
F-4	718+31.8200	-22.0000	5435.4328		319788.4367	179971.9668	178.5992	-0.050000
F-5	718+42.2200	-22.0000	5435.8488		319778.5371	179969.7523	188.7436	-0.050000
F-6	718+52.6200	-22.0000	5436.2648		319768.6123	179967.6528	198.8879	-0.050000
F-7	718+63.0200	-22.0000	5436.6808		319758.6640	179965.6689	209.0323	-0.050000
F-8	718+73.4200	-22.0000	5437.0968		319748.6932	179963.8007	219.1767	-0.050000
F-9	718+83.8200	-22.0000	5437.5128		319738.7014	179962.0485	229.3210	-0.050000
BK BRG 3	718+94.2200	-22.0000	5437.9288		319728.6898	179960.4124	239.4654	-0.050000
CL PIER 3	718+97.2200	-22.0000	5438.0488		319725.7984	179959.9622	242.3916	-0.050000
AH BRG 3	719+00.2200	-22.0000	5438.1688		319722.9056	179959.5216	245.3179	-0.050000
F-1	719+12.8200	-22.0000	5438.6728		319710.7398	179957.7770	257.6082	-0.050000
F-2	719+25.4200	-22.0000	5439.1768		319698.5507	179956.2039	269.8984	-0.050000
F-3	719+38.0200	-22.0000	5439.6808		319686.3407	179954.8026	282.1887	-0.050000
F-4	719+50.6200	-22.0000	5440.1848		319674.1122	179953.5733	294.4790	-0.050000
F-5	719+63.2200	-22.0000	5440.6888		319661.8675	179952.5162	306.7693	-0.050000
F-6	719+75.8200	-22.0000	5441.1928		319649.6092	179951.6317	319.0596	-0.050000
F-7	719+88.4200	-22.0000	5441.6968		319637.3397	179950.9197	331.3498	-0.050000
F-8	720+01.0200	-22.0000	5442.2008		319625.0613	179950.3806	343.6401	-0.050000
F-9	720+13.6200	-22.0000	5442.7048		319612.7766	179950.0143	355.9304	-0.050000

NOTES:

See Sheet B60 for notes.

Quantities			
Detail	INITIAL	DATE	
Quantities By	ERS	11/09	
Checked By	KCS	12/09	

Design			
	INITIAL	DATE	
Designed By	SA	11/09	
Checked By			

Revision Dates	
MM/YY	(Preliminary Stage Only)

18026 1:54:37 PM S:\Tranproj\1000023775\14679\Consultants\Bridge\Drawings\14679_pBD-N705.dgn

Print Date: 12/31/2009
File Name: 14679_pBD-N705.dgn
Horiz. Scale: 1:1 Vert. Scale: As Noted
Staff Bridge Branch - Unit 0224 Unit Leader: MH

PBSJ 4601 DTC Boulevard Suite 700 Denver, CO 80237

Sheet Revisions		
Date:	Comments	Init.

Colorado Department of Transportation
8833 South Wadsworth Court
Littleton, CO 80128
Phone: 303-972-9112 FAX: 303-972-9114
Region 6 RLB

As Constructed
No Revisions:
Revised:
Void:

SB SANTA FE TO EB C470 RAMP
BRIDGE DECK ELEVATIONS
(4 OF 13)

Designer: S. Abraham
Detailer: E. Schawo
Sheet Subset: Bridge
Structure Numbers: F-16-YE
Subset Sheets: B63 of 72

Project No./Code
ES6 0852-103
17679
Sheet Number 252

LEFT FLOWLINE (CONT.) PARALLEL TO HORIZONTAL CONTROL 0.250000 FEET BELOW FINISHED GRADE

BENT LINE	STATION	OFFSET	ELEVATION	ELEV+DL	NORTHING	EASTING	GIRDER LNTH	CRS-SLP
BK BRG 4	720+26.2200	-22.0000	5443.2088		319600.4879	179949.8211	368.2207	-0.050000
CL PIER 4	720+29.2200	-22.0000	5443.3288		319597.5618	179949.8007	371.1469	-0.050000
AH BRG 4	720+32.2200	-22.0000	5443.4488		319594.6355	179949.7899	374.0732	-0.050000
F-1	720+48.1200	-22.0000	5444.0848		319579.1269	179949.8970	389.5824	-0.050000
F-2	720+64.0200	-22.0000	5444.7208		319563.6227	179950.2795	405.0915	-0.050000
F-3	720+79.9200	-22.0000	5445.3568		319548.1277	179950.9374	420.6007	-0.050000
F-4	720+95.8200	-22.0000	5445.9928		319532.6468	179951.8704	436.1099	-0.050000
F-5	721+11.7200	-22.0000	5446.6288		319517.1850	179953.0783	451.6190	-0.050000
F-6	721+27.6200	-22.0000	5447.2648		319501.7471	179954.5607	467.1282	-0.050000
F-7	721+43.5200	-22.0000	5447.9008		319486.3378	179956.3171	482.6373	-0.050000
F-8	721+59.4200	-22.0000	5448.5368		319470.9623	179958.3470	498.1465	-0.050000
F-9	721+75.3200	-22.0000	5449.1728		319455.6252	179960.6496	513.6557	-0.050000
BK BRG 5	721+91.2200	-22.0000	5449.8088		319440.3315	179963.2244	529.1648	-0.050000
CL PIER 5	721+94.2200	-22.0000	5449.9288		319437.4512	179963.7407	532.0911	-0.050000
AH BRG 5	721+97.2200	-22.0000	5450.0488		319434.5725	179964.2665	535.0173	-0.050000
F-1	722+12.6200	-22.0000	5450.6648		319419.8244	179967.1180	550.0388	-0.050000
F-2	722+28.0200	-22.0000	5451.2808		319405.1274	179970.2226	565.0603	-0.050000
F-3	722+43.4200	-22.0000	5451.8968		319390.4862	179973.5797	580.0817	-0.050000
F-4	722+58.8200	-22.0000	5452.5128		319375.9047	179977.1882	595.1032	-0.050000
F-5	722+74.2200	-22.0000	5453.1288		319361.3876	179981.0471	610.1246	-0.050000
F-6	722+89.6200	-22.0000	5453.7448		319346.9390	179985.1551	625.1461	-0.050000
F-7	723+05.0200	-22.0000	5454.3608		319332.5632	179989.5112	640.1675	-0.050000
F-8	723+20.4200	-22.0000	5454.9768		319318.2645	179994.1140	655.1890	-0.050000
F-9	723+35.8200	-22.0000	5455.5928		319304.0471	179998.9620	670.2104	-0.050000
BK BRG 6	723+51.2200	-22.0000	5456.2088		319289.9152	180004.0541	685.2319	-0.050000
CL PIER 6	723+54.2200	-22.0000	5456.3288		319287.1726	180005.0743	688.1581	-0.050000
AH BRG 6	723+57.2200	-22.0000	5456.4488		319284.4333	180006.1037	691.0844	-0.050000
F-1	723+71.3867	-22.0000	5457.0155		319271.5454	180011.0885	704.9029	-0.050000
F-2	723+85.5534	-22.0000	5457.5821		319258.7381	180016.2767	718.7213	-0.050000
F-3	723+99.7201	-22.0000	5458.1488		319246.0144	180021.6670	732.5398	-0.050000
F-4	724+13.8868	-22.0000	5458.7155		319233.3777	180027.2580	746.3583	-0.050000
F-5	724+28.0535	-22.0000	5459.2821		319220.8311	180033.0482	760.1767	-0.050000
F-6	724+42.2202	-22.0000	5459.8488		319208.3776	180039.0364	773.9952	-0.050000
F-7	724+56.3869	-22.0000	5460.4155		319196.0205	180045.2209	787.8137	-0.050000
F-8	724+70.5536	-22.0000	5460.9821		319183.7628	180051.6003	801.6321	-0.050000
F-9	724+84.7203	-22.0000	5461.5488		319171.6076	180058.1728	815.4506	-0.050000
BK BRG 7	724+98.8870	-22.0000	5462.1155		319159.5580	180064.9369	829.2691	-0.050000
CL PIER 7	725+01.8870	-22.0000	5462.2355		319157.0202	180066.3937	832.1953	-0.050000
AH BRG 7	725+04.8870	-22.0000	5462.3555		319154.4873	180067.8590	835.1216	-0.050000
F-1	725+19.0536	-22.0000	5462.9221		319142.5932	180074.8928	848.9400	-0.050000
F-2	725+33.2202	-22.0000	5463.4888		319130.8120	180082.1141	862.7583	-0.050000
F-3	725+47.3868	-22.0000	5464.0555		319119.1465	180089.5208	876.5767	-0.050000
F-4	725+61.5534	-22.0000	5464.6221		319107.5998	180097.1113	890.3951	-0.050000
F-5	725+75.7200	-22.0000	5465.1888		319096.1746	180104.8836	904.2135	-0.050000
F-6	725+89.8866	-22.0000	5465.7555		319084.8738	180112.8357	918.0318	-0.050000
F-7	726+04.0532	-22.0000	5466.3221		319073.7004	180120.9657	931.8502	-0.050000
F-8	726+18.2198	-22.0000	5466.8793		319062.6570	180129.2717	945.6686	-0.050000
F-9	726+32.3864	-22.0000	5467.3932		319051.7465	180137.7513	959.4869	-0.050000
BK BRG 8	726+46.5530	-22.0000	5467.8610		319040.9715	180146.4025	973.3053	-0.050000
CL PIER 8	726+49.5530	-22.0000	5467.9542		319038.7074	180148.2564	976.2316	-0.050000
AH BRG 8	726+52.5530	-22.0000	5468.0453		319036.4495	180150.1178	979.1578	-0.050000
F-1	726+67.9530	-22.0000	5468.4802		319024.9580	180159.7917	994.1793	-0.050000
F-2	726+83.3530	-22.0000	5468.8607		319013.6347	180169.6618	1009.2007	-0.050000
F-3	726+98.7530	-22.0000	5469.1866		319002.4828	180179.7253	1024.2222	-0.050000
F-4	727+14.1530	-22.0000	5469.4580		318991.5058	180189.9793	1039.2436	-0.050000
F-5	727+29.5530	-22.0000	5469.6748		318980.7068	180200.4205	1054.2651	-0.050000
F-6	727+44.9530	-22.0000	5469.8371		318970.0890	180211.0461	1069.2865	-0.050000
F-7	727+60.3530	-22.0000	5469.9450		318959.6556	180221.8527	1084.3080	-0.050000
F-8	727+75.7530	-22.0000	5469.9982		318949.4098	180232.8372	1099.3295	-0.050000
F-9	727+91.1530	-22.0000	5469.9970		318939.3544	180243.9965	1114.3509	-0.050000
BK BRG 9	728+06.5530	-22.0000	5469.9412		318929.4925	180255.3270	1129.3724	-0.050000
CL PIER 9	728+09.5530	-22.0000	5469.9240		318927.5942	180257.5540	1132.2986	-0.050000
AH BRG 9	728+12.5530	-22.0000	5469.9047		318925.7033	180259.7872	1135.2249	-0.050000
F-1	728+27.9530	-22.0000	5469.7732		318916.1151	180271.3503	1150.2463	-0.050000
F-2	728+43.3530	-22.0000	5469.5871		318906.7274	180283.0767	1165.2678	-0.050000
F-3	728+58.7530	-22.0000	5469.3466		318897.5427	180294.9629	1180.2892	-0.050000
F-4	728+74.1530	-22.0000	5469.0514		318888.5640	180307.0053	1195.3107	-0.050000
F-5	728+89.5530	-22.0000	5468.7018		318879.7937	180319.2004	1210.3321	-0.050000
F-6	729+04.9530	-22.0000	5468.2977		318871.2346	180331.5447	1225.3536	-0.050000

LEFT FLOWLINE (CONT.) PARALLEL TO HORIZONTAL CONTROL 0.250000 FEET BELOW FINISHED GRADE

BENT LINE	STATION	OFFSET	ELEVATION	ELEV+DL	NORTHING	EASTING	GIRDER LNTH	CRS-SLP
F-7	729+20.3530	-22.0000	5467.8390		318862.8891	180344.0344	1240.3750	-0.050000
F-8	729+35.7530	-22.0000	5467.3258		318854.7598	180356.6658	1255.3965	-0.050000
F-9	729+51.1530	-22.0000	5466.7580		318846.8490	180369.4352	1270.4180	-0.050000
BK BRG 10	729+66.5530	-22.0000	5466.1640		318839.1591	180382.3388	1285.4394	-0.050000
CL PIER 10	729+69.5530	-22.0000	5466.0483		318837.6871	180384.8678	1288.3657	-0.050000
AH BRG 10	729+72.5530	-22.0000	5465.9326		318836.2234	180387.4018	1291.2919	-0.050000
F-1	729+87.9530	-22.0000	5465.3385		318828.8442	180400.4856	1306.3134	-0.050000
F-2	730+03.3530	-22.0000	5464.7445		318821.6912	180413.6944	1321.3348	-0.050000
F-3	730+18.7530	-22.0000	5464.1505		318814.7665	180427.0244	1336.3563	-0.050000
F-4	730+34.1530	-22.0000	5463.5564		318808.0723	180440.4714	1351.3777	-0.050000
F-5	730+49.5530	-22.0000	5462.9624		318801.6103	180454.0318	1366.3992	-0.050000
F-6	730+64.9530	-22.0000	5462.3684		318795.3827	180467.7013	1381.4206	-0.050000
F-7	730+80.3530	-22.0000	5461.7743		318789.3911	180481.4759	1396.4421	-0.050000
F-8	730+95.7530	-22.0000	5461.1803		318783.6374	180495.3516	1411.4635	-0.050000
F-9	731+11.1530	-22.0000	5460.5863		318778.1234	180509.3241	1426.4850	-0.050000
BK BRG 11	731+26.5530	-22.0000	5460.0096		318772.8506	180523.3896	1441.5065	-0.050000
CL PIER 11	731+29.5530	-22.0000	5459.9007		318771.8516	180526.1400	1444.4327	-0.050000
AH BRG 11	731+32.5530	-22.0000	5459.7930		318770.8619	180528.8939	1447.3590	-0.050000
F-1	731+45.7530	-22.0000	5459.3325		318766.6169	180541.0493	1460.2345	-0.050000
F-2	731+58.9530	-22.0000	5458.8941		318762.5516	180553.2661	1473.1100	-0.050000
F-3	731+72.1530	-22.0000	5458.4777		318758.6670	180565.5416	1485.9856	-0.050000
F-4	731+85.3530	-22.0000	5458.0833		318754.9638	180577.8729	1498.8611	-0.050000
F-5	731+98.5530	-22.0000	5457.7110		318751.4429	180590.2575	1511.7366	-0.050000
F-6	732+11.7530	-22.0000	5457.3608		318748.1050	180602.6928	1524.6122	-0.050000
F-7	732+24.9530	-22.0000	5457.0326		318744.9509	180615.1759	1537.4877	-0.050000
F-8	732+38.1530	-22.0000	5456.7265		318741.9812	180627.7042	1550.3632	-0.050000
F-9	732+51.3530	-22.0000	5456.4424		318739.1967	180640.2748	1563.2387	-0.050000
BK BRG 12	732+64.5530	-22.0000	5456.1803		318736.5977	180652.8852	1576.1143	-0.050000
CL PIER 12	732+67.5530	-22.0000	5456.1238		318736.0330	180655.7565	1579.0405	-0.050000
AH BRG 12	732+70.5530	-22.0000	5456.0685		318735.4780	180658.6296	1581.9668	-0.050000
F-1	732+80.4530	-22.0000	5455.8939		318733.7146	180668.1238	1591.6234	-0.050000
F-2	732+90.3530	-22.0000	5455.7318		318732.0564	180677.6370	1601.2801	-0.050000
F-3	733+00.2530	-22.0000	5455.5820		318730.5035	180687.1679	1610.9367	-0.050000
F-4	733+10.1530	-22.0000	5455.4447		318729.0560	180696.7155	1620.5934	-0.050000
F-5	733+20.0530	-22.0000	5455.3197		318727.7144	180706.2783	1630.2500	-0.050000
F-6	733+29.9530	-22.0000	5455.2072		318726.4786	180715.8556	1639.9067	-0.050000
F-7	733+39.8530	-22.0000	5455.1070		318725.3487	180725.4458	1649.5633	-0.050000
F-8	733+49.7530	-22.0000	5455.0193		318724.3251	180735.0480	1659.2200	-0.050000
F-9	733+59.6530	-22.0000	5454.9465		318723.4077	180744.6610	1668.8766	-0.049886
BK BRG 13	733+69.5530	-22.0000	5454.9042		318722.5966	180754.2834	1678.5333	-0.048943
CL PIER 13	733+72.5530	-22.0000	5454.8980		318722.3719	180757.2010	1681.4595	-0.048470
END BRIDGE	733+77.5530	-22.0000	5454.8945		318722.0191	180762.0654	1686.3366	-0.047487
END A SLAB	734+07.5530	-22.0000	5455.0510		318720.4732	180791.2857	1715.5992	-0.036528

GIRDER A LEFT VARIES WITH SUPER NOMINAL OFFSET = -17.0603 FT -0.2500 NORMAL FROM FINISHED GRADE

BENT LINE	STATION	OFFSET	ELEVATION	ELEV+DL	NORTHING	EASTING	GIRDER LNTH	CRS-SLP
STA BRIDGE	716+48.7200	-17.0786	5428.6963		319959.2631	180024.9605	0.0000	-0.030000
CL PIER 1	716+53.7200	-17.0767	5428.8549		319954.8011	180022.9245	4.9047	-0.032427
AH BRG 1	716+56.7200	-17.0755	5428.9501	428.9501	319952.1184	180021.7149	7.8475	-0.033883
F-1	716+69.4700	-17.0702	5429.3563	429.4613	319940.6726	180016.6742	20.3545	-0.039972
F-2	716+82.2200	-17.0655	5429.7839	429.9705	319929.1557	180011.7976	32.8614	-0.044809
F-3	716+94.9700	-17.0621	5430.2384	430.4834	319917.5700	180007.0868	45.3684	-0.048068
F-4	717+07.7200	-17.0603	5430.7198	430.9998	319905.9177	180002.5429	57.8754	-0.049748
F-5	717+20.4700	-17.0600	5431.2255	431.5172	319894.2014	179998.1670	70.3823	-0.050000
F-6	717+33.2200	-17.0600	5431.7355	432.0155	319882.4239	179993.9587	82.8893	-0.050000
F-7	717+45.9700	-17.0600	5432.2455	432.4905	319870.5875	179989.9184	95.3962	-0.050000
F-8	717+58.7200	-17.0600	5432.7555	432.9422	319858.6948	179986.0473	107.9032	-0.050000
F-9	717+71.4700	-17.0600	5433.2655	433.3705	319846.7482	179982.3459	120.4102	-0.050000
BK BRG 2	717+84.2200	-17.0600	5433.7755	433.7755	319834.7501	179978.8152	132.9171	-0.050000
CL PIER 2	717+87.2200	-17.0600	5433.8955		319831.9197	179978.0093	135.8599	-0.050000
AH BRG 2	717+90.2200	-17.0600	5434.0155	434.0155	319829.0868	179977.2128	138.8028	-0.050000

NOTES:

See Sheet B60 for notes.

Quantities		
	INITIAL	DATE
Quantities By		
Checked By		

Detail		
	INITIAL	DATE
Detailed By	ERS	11/09
Checked By	KCS	12/09

Design		
	INITIAL	DATE
Designed By	SA	11/09
Checked By		

Revision Dates	
MM/YY	

(Preliminary Stage Only)

18026 1:54:38 PM S:\Tranproj\1000023775\14679\Consultants\Bridge\Drawings\14679_pBD-N705.dgn

Print Date: 12/31/2009
File Name: 14679_pBD-N705.dgn
Horiz. Scale: 1:1 Vert. Scale: As Noted
Staff Bridge Branch - Unit 0224 Unit Leader: MH

PBSJ 4601 DTC Boulevard Suite 700 Denver, CO 80237

Sheet Revisions		
Date:	Comments	Init.

Colorado Department of Transportation
8833 South Wadsworth Court
Littleton, CO 80128
Phone: 303-972-9112 FAX: 303-972-9114
Region 6 RLB

As Constructed
No Revisions:
Revised:
Void:

SB SANTA FE TO EB C470 RAMP
BRIDGE DECK ELEVATIONS
(5 OF 13)

Designer: S. Abraham
Detailer: E. Schawo
Sheet Subset: Bridge
Structure Numbers F-16-YE
Subset Sheets: B64 of 72

Project No./Code
ES6 0852-103
17679
Sheet Number 253

GIRDER A LEFT (CONT.) VARIES WITH SUPER NOMINAL OFFSET = -17.0603 FT -0.2500 NORMAL FROM FINISHED GRADE

BENT LINE	STATION	OFFSET	ELEVATION	ELEV+DL	NORTHING	EASTING	GIRDER LNTH	CRS-SLP
F-1	718+00.6200	-17.0600	5434.4315	434.4645	319819.2454	179974.5256	149.0045	-0.050000
F-2	718+11.0200	-17.0600	5434.8475	434.9062	319809.3734	179971.9528	159.2063	-0.050000
F-3	718+21.4200	-17.0600	5435.2635	435.3405	319799.4722	179969.4950	169.4080	-0.050000
F-4	718+31.8200	-17.0600	5435.6795	435.7675	319789.5432	179967.1523	179.6098	-0.050000
F-5	718+42.2200	-17.0600	5436.0955	436.1872	319779.5875	179964.9252	189.8116	-0.050000
F-6	718+52.6200	-17.0600	5436.5115	436.5995	319769.6066	179962.8139	200.0133	-0.050000
F-7	718+63.0200	-17.0600	5436.9275	437.0045	319759.6020	179960.8187	210.2151	-0.050000
F-8	718+73.4200	-17.0600	5437.3435	437.4022	319749.5747	179958.9399	220.4168	-0.050000
F-9	718+83.8200	-17.0600	5437.7595	437.7925	319739.5264	179957.1779	230.6186	-0.050000
BK BRG 3	718+94.2200	-17.0600	5438.1755	438.1755	319729.4582	179955.5326	240.8203	-0.050000
CL PIER 3	718+97.2200	-17.0600	5438.2955		319726.5504	179955.0797	243.7632	-0.050000
AH BRG 3	719+00.2200	-17.0600	5438.4155	438.4155	319723.6412	179954.6367	246.7060	-0.050000
F-1	719+12.8200	-17.0600	5438.9195	439.0005	319711.4066	179952.8822	259.0658	-0.050000
F-2	719+25.4200	-17.0600	5439.4235	439.5675	319699.1486	179951.3002	271.4256	-0.050000
F-3	719+38.0200	-17.0600	5439.9275	440.1165	319686.8694	179949.8909	283.7854	-0.050000
F-4	719+50.6200	-17.0600	5440.4315	440.6475	319674.5716	179948.6547	296.1453	-0.050000
F-5	719+63.2200	-17.0600	5440.9355	441.1605	319662.2577	179947.5916	308.5051	-0.050000
F-6	719+75.8200	-17.0600	5441.4395	441.6555	319649.9301	179946.7020	320.8649	-0.050000
F-7	719+88.4200	-17.0600	5441.9435	442.1325	319637.5911	179945.9861	333.2247	-0.050000
F-8	720+01.0200	-17.0600	5442.4475	442.5915	319625.2432	179945.4439	345.5846	-0.050000
F-9	720+13.6200	-17.0600	5442.9515	443.0325	319612.8890	179945.0757	357.9444	-0.050000
BK BRG 4	720+26.2200	-17.0600	5443.4555	443.4555	319600.5308	179944.8813	370.3042	-0.050000
CL PIER 4	720+29.2200	-17.0600	5443.5755		319597.5881	179944.8606	373.2470	-0.050000
AH BRG 4	720+32.2200	-17.0600	5443.6955	443.6955	319594.6453	179944.8499	376.1898	-0.050000
F-1	720+48.1200	-17.0600	5444.3315	444.5295	319579.0490	179944.9575	391.7867	-0.050000
F-2	720+64.0200	-17.0600	5444.9675	445.3195	319563.4570	179945.3423	407.3837	-0.050000
F-3	720+79.9200	-17.0600	5445.6035	446.0655	319547.8743	179946.0039	422.9806	-0.050000
F-4	720+95.8200	-17.0600	5446.2395	446.7675	319532.3059	179946.9422	438.5775	-0.050000
F-5	721+11.7200	-17.0600	5446.8755	447.4255	319516.7565	179948.1570	454.1744	-0.050000
F-6	721+27.6200	-17.0600	5447.5115	448.0395	319501.2312	179949.6477	469.7713	-0.050000
F-7	721+43.5200	-17.0600	5448.1475	448.6095	319485.7348	179951.4141	485.3683	-0.050000
F-8	721+59.4200	-17.0600	5448.7835	449.1355	319470.2723	179953.4554	500.9652	-0.050000
F-9	721+75.3200	-17.0600	5449.4195	449.6175	319454.8484	179955.7711	516.5621	-0.050000
BK BRG 5	721+91.2200	-17.0600	5450.0555	450.0555	319439.4682	179958.3604	532.1590	-0.050000
CL PIER 5	721+94.2200	-17.0600	5450.1755		319436.5715	179958.8796	535.1018	-0.050000
AH BRG 5	721+97.2200	-17.0600	5450.2955	450.2955	319433.6765	179959.4085	538.0446	-0.050000
F-1	722+12.6200	-17.0600	5450.9115	451.0795	319418.8450	179962.2760	553.1511	-0.050000
F-2	722+28.0200	-17.0600	5451.5275	451.8262	319404.0649	179965.3982	568.2575	-0.050000
F-3	722+43.4200	-17.0600	5452.1435	452.5355	319389.3407	179968.7743	583.3640	-0.050000
F-4	722+58.8200	-17.0600	5452.7595	453.2075	319374.6768	179972.4032	598.4704	-0.050000
F-5	722+74.2200	-17.0600	5453.3755	453.8422	319360.0775	179976.2839	613.5769	-0.050000
F-6	722+89.6200	-17.0600	5453.9915	454.4395	319345.5471	179980.4153	628.6833	-0.050000
F-7	723+05.0200	-17.0600	5454.6075	454.9995	319331.0900	179984.7959	643.7898	-0.050000
F-8	723+20.4200	-17.0600	5455.2235	455.5222	319316.7104	179989.4248	658.8962	-0.050000
F-9	723+35.8200	-17.0600	5455.8395	456.0075	319302.4126	179994.3004	674.0027	-0.050000
BK BRG 6	723+51.2200	-17.0600	5456.4555	456.4555	319288.2007	179999.4212	689.1091	-0.050000
CL PIER 6	723+54.2200	-17.0600	5456.5755		319285.4425	180000.4472	692.0519	-0.050000
AH BRG 6	723+57.2200	-17.0600	5456.6955	456.6955	319282.6878	180001.4824	694.9948	-0.050000
F-1	723+71.3867	-17.0600	5457.2622	457.4092	319269.7269	180006.4954	708.8914	-0.050000
F-2	723+85.5534	-17.0600	5457.8288	458.0902	319256.8472	180011.7130	722.7881	-0.050000
F-3	723+99.7201	-17.0600	5458.3955	458.7385	319244.0515	180017.1337	736.6847	-0.050000
F-4	724+13.8868	-17.0600	5458.9622	459.3542	319231.3433	180022.7563	750.5814	-0.050000
F-5	724+28.0535	-17.0600	5459.5288	459.9372	319218.7255	180028.5794	764.4781	-0.050000
F-6	724+42.2202	-17.0600	5460.0955	460.4875	319206.2016	180034.6014	778.3747	-0.050000
F-7	724+56.3869	-17.0600	5460.6622	461.0052	319193.7747	180040.8209	792.2714	-0.050000
F-8	724+70.5536	-17.0600	5461.2288	461.4902	319181.4477	180047.2363	806.1680	-0.050000
F-9	724+84.7203	-17.0600	5461.7955	461.9425	319169.2237	180053.8460	820.0647	-0.050000
BK BRG 7	724+98.8870	-17.0600	5462.3622	462.3622	319157.1059	180060.6484	833.9613	-0.050000
CL PIER 7	725+01.8870	-17.0600	5462.4822		319154.5537	180062.1135	836.9042	-0.050000
AH BRG 7	725+04.8870	-17.0600	5462.6022	462.6022	319152.0064	180063.5871	839.8470	-0.050000
F-1	725+19.0536	-17.0600	5463.1688	463.3158	319140.0450	180070.6607	853.7435	-0.050000
F-2	725+33.2202	-17.0600	5463.7355	463.9968	319128.1971	180077.9228	867.6401	-0.050000
F-3	725+47.3868	-17.0600	5464.3022	464.6452	319116.4657	180085.3715	881.5367	-0.050000
F-4	725+61.5534	-17.0600	5464.8688	465.2608	319104.8536	180093.0050	895.4332	-0.050000
F-5	725+75.7200	-17.0600	5465.4355	465.8438	319093.3637	180100.8212	909.3298	-0.050000
F-6	725+89.8866	-17.0600	5466.0022	466.3942	319081.9990	180108.8184	923.2263	-0.050000
F-7	726+04.0532	-17.0600	5466.5688	466.9118	319070.7624	180116.9944	937.1229	-0.050000
F-8	726+18.2198	-17.0600	5467.1260	467.3873	319059.6565	180125.3472	951.0195	-0.050000
F-9	726+32.3864	-17.0600	5467.6399	467.7869	319048.6843	180133.8749	964.9160	-0.050000

GIRDER A LEFT (CONT.) VARIES WITH SUPER NOMINAL OFFSET = -17.0603 FT -0.2500 NORMAL FROM FINISHED GRADE

BENT LINE	STATION	OFFSET	ELEVATION	ELEV+DL	NORTHING	EASTING	GIRDER LNTH	CRS-SLP
BK BRG 8	726+46.5530	-17.0600	5468.1077	468.1077	319037.8484	180142.5751	978.8126	-0.050000
CL PIER 8	726+49.5530	-17.0600	5468.2009		319035.5714	180144.4394	981.7554	-0.050000
AH BRG 8	726+52.5530	-17.0600	5468.2920	468.2920	319033.3008	180146.3114	984.6982	-0.050000
F-1	726+67.9530	-17.0600	5468.7269	468.8949	319021.7442	180156.0400	999.8046	-0.050000
F-2	726+83.3530	-17.0600	5469.1073	469.4060	319010.3568	180165.9660	1014.9111	-0.050000
F-3	726+98.7530	-17.0600	5469.4333	469.8253	318999.1419	180176.0864	1030.0175	-0.050000
F-4	727+14.1530	-17.0600	5469.7046	470.1526	318988.1027	180186.3985	1045.1240	-0.050000
F-5	727+29.5530	-17.0600	5469.9215	470.3882	318977.2426	180196.8988	1060.2304	-0.050000
F-6	727+44.9530	-17.0600	5470.0838	470.5318	318966.5647	180207.5845	1075.3369	-0.050000
F-7	727+60.3530	-17.0600	5470.1916	470.5836	318956.0723	180218.4522	1090.4433	-0.050000
F-8	727+75.7530	-17.0600	5470.2449	470.5436	318945.7685	180229.4989	1105.5498	-0.050000
F-9	727+91.1530	-17.0600	5470.2437	470.4117	318935.6562	180240.7213	1120.6562	-0.050000
BK BRG 9	728+06.5530	-17.0600	5470.1879	470.1879	318925.7385	180252.1160	1135.7627	-0.050000
CL PIER 9	728+09.5530	-17.0600	5470.1707		318923.8294	180254.3555	1138.7055	-0.050000
AH BRG 9	728+12.5530	-17.0600	5470.1514	470.1514	318921.9278	180256.6014	1141.6483	-0.050000
F-1	728+27.9530	-17.0600	5470.0199	470.1909	318912.2854	180268.2300	1156.7548	-0.050000
F-2	728+43.3530	-17.0600	5469.8338	470.1378	318902.8444	180280.0227	1171.8612	-0.050000
F-3	728+58.7530	-17.0600	5469.5932	469.9922	318893.6079	180291.9761	1186.9677	-0.050000
F-4	728+74.1530	-17.0600	5469.2981	469.7541	318884.5783	180304.0867	1202.0741	-0.050000
F-5	728+89.5530	-17.0600	5468.9485	469.4235	318875.7585	180316.3509	1217.1806	-0.050000
F-6	729+04.9530	-17.0600	5468.5443	469.0003	318867.1508	180328.7649	1232.2870	-0.050000
F-7	729+20.3530	-17.0600	5468.0857	468.4847	318858.7582	180341.3253	1247.3935	-0.050000
F-8	729+35.7530	-17.0600	5467.5724	467.8764	318850.5829	180354.0281	1262.4999	-0.050000
F-9	729+51.1530	-17.0600	5467.0047	467.1757	318842.6274	180366.8698	1277.6064	-0.050000
BK BRG 10	729+66.5530	-17.0600	5466.4107	466.4107	318834.8939	180379.8465	1292.7128	-0.050000
CL PIER 10	729+69.5530	-17.0600	5466.2950		318833.4135	180382.3898	1295.6556	-0.050000
AH BRG 10	729+72.5530	-17.0600	5466.1792	466.1792	318831.9416	180384.9380	1298.5984	-0.050000
F-1	729+87.9530	-17.0600	5465.5852	465.7592	318824.5206	180398.0959	1313.7049	-0.050000
F-2	730+03.3530	-17.0600	5464.9912	465.3005	318817.3272	180411.3795	1328.8113	-0.050000
F-3	730+18.7530	-17.0600	5464.3971	464.8031	318810.3632	180424.7848	1343.9178	-0.050000
F-4	730+34.1530	-17.0600	5463.8031	464.2671	318803.6312	180438.3081	1359.0242	-0.050000
F-5	730+49.5530	-17.0600	5463.2091	463.6924	318797.1326	180451.9451	1374.1307	-0.050000
F-6	730+64.9530	-17.0600	5462.6150	463.0790	318790.8697	180465.6919	1389.2371	-0.050000
F-7	730+80.3530	-17.0600	5462.0210	462.4270	318784.8443	180479.5445	1404.3436	-0.050000
F-8	730+95.7530	-17.0600	5461.4270	461.7363	318779.0581	180493.4987	1419.4500	-0.050000
F-9	731+11.1530	-17.0600	5460.8330	461.0070	318773.5129	180507.5504	1434.5565	-0.050000
BK BRG 11	731+26.5530	-17.0600	5460.2563	460.2563	318768.2101	180521.6953	1449.6629	-0.050000
CL PIER 11	731+29.5530	-17.0600	5460.1474		318767.2056	180524.4614	1452.6058	-0.050000
AH BRG 11	731+32.5530	-17.0600	5460.0397	460.0397	318766.2102	180527.2308	1455.5486	-0.050000
F-1	731+45.7530	-17.0600	5459.5792	459.6752	318761.9412	180539.4551	1468.4970	-0.050000
F-2	731+58.9530	-17.0600	5459.1407	459.3114	318757.8530	180551.7410	1481.4453	-0.050000
F-3	731+72.1530	-17.0600	5458.7244	458.9484	318753.9463	180564.0859	1494.3937	-0.050000
F-4	731+85.3530	-17.0600	5458.3300	458.5860	318750.2222	180576.4870	1507.3421	-0.050000
F-5	731+98.5530	-17.0600	5457.9577	458.2244	318746.6814	180588.9418	1520.2905	-0.050000
F-6	732+11.7530	-17.0600	5457.6075	457.8635	318743.3246	180601.4473	1533.2389	-0.050000
F-7	732+24.9530	-17.0600	5457.2793	457.5033	318740.1526	180614.0010	1546.1873	-0.050000
F-8	732+38.1530	-17.0600	5456.9732	457.1438	318737.1662	180626.6002	1559.1356	-0.050000
F-9	732+51.3530	-17.0600	5456.6891	456.7851	318734.3658	180639.2421	1572.0840	-0.050000
BK BRG 12	732+64.5530	-17.0600	5456.4270	456.4270	318731.7522	180651.9238	1585.0324	-0.050000
CL PIER 12	732+67.5530	-17.0600	5456.3705		318731.1843	180654.8112	1587.9752	-0.050000
AH BRG 12	732+70.5530	-17.0600	5456.3152	456.3152	318730.6261	180657.7007	1590.9180	-0.050000
F-1	732+80.4530	-17.0600	5456.1406	456.1766	318728.8527	180667.2487	1600.6293	-0.050000
F-2	732+90.3530	-17.0600	5455.9785	456.0425	318727.1851	180676.8156	1610.3406	-0.050000
F-3	733+00.2530	-17.0600	5455.8287	455.9127	318725.6235	180686.4005	1620.0519	-0.050000
F-4	733+10.1530	-17.0600	5455.6914	455.7874	318724.1679	180696.0020	1629.7632	-0.050000
F-5	733+20.0530	-17.0600	5455.5664	455.6664	318722.8186	180705.6190	1639.4745	-0.050000
F-6	733+29.9530	-17.0600	5455.4539	455.5499	318721.5758	180715.2505	1649.1858	-0.050000
F-7	733+39.8530	-17.0600	5455.3537	455.4377	318720.4395	180724.8950	1658.8971	-0.050000
F-8	733+49.7530	-17.0600	5455.2660	455.3300	318719.4101	180734.5516	1668.6084	-0.050000
F-9	733+59.6530	-17.0601	5455.1926	455.2286	318718.4876	180744.2189	1678.3196	-0.049886
BK BRG 13	733+69.5530	-17.0611	5455.1457	455.1457	318717.6731	180753.8959	1688.0309	-0.048943
CL PIER 13	733+72.5530	-17.0617	5455.1371		318717.4476	180756.8300	1690.9737	-0.048470
END BRIDGE	733+77.5530	-17.0627	5455.1287		318717.0938	180761.7220	1695.8784	-0.047487

NOTES:

See Sheet B60 for notes.

GIRDER A RIGHT — VARIES WITH SUPER — NOMINAL OFFSET = -10.3810 FT — -0.2500 NORMAL FROM FINISHED GRADE

BENT LINE	STATION	OFFSET	ELEVATION	ELEV+DL	NORTHING	EASTING	GIRDER LNTH	CRS-SLP
STA BRIDGE	716+48.7200	-10.3941	5428.8969		319962.0525	180018.8858	0.0000	-0.030000
CL PIER 1	716+53.7200	-10.3927	5429.0717		319957.5563	180016.8349	4.9420	-0.032427
AH BRG 1	716+56.7200	-10.3919	5429.1765	429.1765	319954.8531	180015.6163	7.9072	-0.033883
F-1	716+69.4700	-10.3880	5429.6234	429.7284	319943.3195	180010.5386	20.5093	-0.039972
F-2	716+82.2200	-10.3847	5430.0832	430.2699	319931.7144	180005.6262	33.1114	-0.044809
F-3	716+94.9700	-10.3823	5430.5595	430.8045	319920.0402	180000.8806	45.7136	-0.048068
F-4	717+07.7200	-10.3810	5431.0521	431.3321	319908.2991	179996.3026	58.3157	-0.049748
F-5	717+20.4700	-10.3808	5431.5594	431.8511	319896.4936	179991.8935	70.9178	-0.050000
F-6	717+33.2200	-10.3808	5432.0694	432.3494	319884.6264	179987.6531	83.5199	-0.050000
F-7	717+45.9700	-10.3808	5432.5794	432.8244	319872.7001	179983.5822	96.1220	-0.050000
F-8	717+58.7200	-10.3808	5433.0894	433.2761	319860.7168	179979.6816	108.7241	-0.050000
F-9	717+71.4700	-10.3808	5433.5994	433.7044	319848.6794	179975.9521	121.3262	-0.050000
BK BRG 2	717+84.2200	-10.3808	5434.1094	434.1094	319836.5899	179972.3944	133.9283	-0.050000
CL PIER 2	717+87.2200	-10.3808	5434.2294		319833.7381	179971.5824	136.8936	-0.050000
AH BRG 2	717+90.2200	-10.3808	5434.3494	434.3494	319830.8835	179970.7800	139.8588	-0.050000
F-1	718+00.6200	-10.3808	5434.7654	434.7984	319820.9673	179968.0722	150.1381	-0.050000
F-2	718+11.0200	-10.3808	5435.1814	435.2401	319811.0202	179965.4799	160.4175	-0.050000
F-3	718+21.4200	-10.3808	5435.5974	435.6744	319801.0437	179963.0033	170.6969	-0.050000
F-4	718+31.8200	-10.3808	5436.0134	436.1014	319791.0391	179960.6429	180.9762	-0.050000
F-5	718+42.2200	-10.3808	5436.4294	436.5211	319781.0077	179958.3989	191.2556	-0.050000
F-6	718+52.6200	-10.3808	5436.8454	436.9334	319770.9510	179956.2715	201.5350	-0.050000
F-7	718+63.0200	-10.3808	5437.2614	437.3384	319760.8701	179954.2611	211.8144	-0.050000
F-8	718+73.4200	-10.3808	5437.6774	437.7361	319750.7666	179952.3680	222.0937	-0.050000
F-9	718+83.8200	-10.3808	5438.0934	438.1264	319740.6418	179950.5925	232.3731	-0.050000
BK BRG 3	718+94.2200	-10.3808	5438.5094	438.5094	319730.4970	179948.9347	242.6525	-0.050000
CL PIER 3	718+97.2200	-10.3808	5438.6294		319727.5671	179948.4784	245.6177	-0.050000
AH BRG 3	719+00.2200	-10.3808	5438.7494	438.7494	319724.6358	179948.0320	248.5829	-0.050000
F-1	719+12.8200	-10.3808	5439.2534	439.3344	319712.3081	179946.2642	261.0367	-0.050000
F-2	719+25.4200	-10.3808	5439.7574	439.9014	319699.9568	179944.6701	273.4906	-0.050000
F-3	719+38.0200	-10.3808	5440.2614	440.4504	319687.5842	179943.2502	285.9444	-0.050000
F-4	719+50.6200	-10.3808	5440.7654	440.9814	319675.1930	179942.0044	298.3983	-0.050000
F-5	719+63.2200	-10.3808	5441.2694	441.4944	319662.7854	179940.9334	310.8521	-0.050000
F-6	719+75.8200	-10.3808	5441.7734	441.9894	319650.3639	179940.0370	323.3060	-0.050000
F-7	719+88.4200	-10.3808	5442.2774	442.4664	319637.9311	179939.3156	335.7599	-0.050000
F-8	720+01.0200	-10.3808	5442.7814	442.9254	319625.4893	179938.7693	348.2137	-0.050000
F-9	720+13.6200	-10.3808	5443.2854	443.3664	319613.0411	179938.3982	360.6676	-0.050000
BK BRG 4	720+26.2200	-10.3808	5443.7894	443.7894	319600.5889	179938.2024	373.1214	-0.050000
CL PIER 4	720+29.2200	-10.3808	5443.9094		319597.6237	179938.1816	376.0866	-0.050000
AH BRG 4	720+32.2200	-10.3808	5444.0294	444.0294	319594.6585	179938.1708	379.0518	-0.050000
F-1	720+48.1200	-10.3808	5444.6654	444.8634	319578.9435	179938.2793	394.7674	-0.050000
F-2	720+64.0200	-10.3808	5445.3014	445.6534	319563.2330	179938.6669	410.4830	-0.050000
F-3	720+79.9200	-10.3808	5445.9374	446.3994	319547.5317	179939.3335	426.1986	-0.050000
F-4	720+95.8200	-10.3808	5446.5734	447.1014	319531.8448	179940.2789	441.9141	-0.050000
F-5	721+11.7200	-10.3808	5447.2094	447.7594	319516.1772	179941.5030	457.6297	-0.050000
F-6	721+27.6200	-10.3808	5447.8454	448.3734	319500.5338	179943.0051	473.3453	-0.050000
F-7	721+43.5200	-10.3808	5448.4814	448.9434	319484.9195	179944.7848	489.0609	-0.050000
F-8	721+59.4200	-10.3808	5449.1174	449.4694	319469.3393	179946.8417	504.7764	-0.050000
F-9	721+75.3200	-10.3808	5449.7534	449.9514	319453.7981	179949.1750	520.4920	-0.050000
BK BRG 5	721+91.2200	-10.3808	5450.3894	450.3894	319438.3008	179951.7841	536.2076	-0.050000
CL PIER 5	721+94.2200	-10.3808	5450.5094		319435.3822	179952.3071	539.1728	-0.050000
AH BRG 5	721+97.2200	-10.3808	5450.6294	450.6294	319432.4652	179952.8401	542.1380	-0.050000
F-1	722+12.6200	-10.3808	5451.2454	451.4134	319417.5208	179955.7294	557.3594	-0.050000
F-2	722+28.0200	-10.3808	5451.8614	452.1601	319402.6282	179958.8753	572.5808	-0.050000
F-3	722+43.4200	-10.3808	5452.4774	452.8694	319387.7921	179962.2771	587.8021	-0.050000
F-4	722+58.8200	-10.3808	5453.0934	453.5414	319373.0166	179965.9337	603.0235	-0.050000
F-5	722+74.2200	-10.3808	5453.7094	454.1761	319358.3062	179969.8439	618.2449	-0.050000
F-6	722+89.6200	-10.3808	5454.3254	454.7734	319343.6653	179974.0067	633.4663	-0.050000
F-7	723+05.0200	-10.3808	5454.9414	455.3334	319329.0982	179978.4207	648.6876	-0.050000
F-8	723+20.4200	-10.3808	5455.5574	455.8561	319314.6091	179983.0848	663.9090	-0.050000
F-9	723+35.8200	-10.3808	5456.1734	456.3414	319300.2025	179987.9974	679.1304	-0.050000
BK BRG 6	723+51.2200	-10.3808	5456.7894	456.7894	319285.8826	179993.1571	694.3518	-0.050000
CL PIER 6	723+54.2200	-10.3808	5456.9094		319283.1034	179994.1910	697.3170	-0.050000

GIRDER A RIGHT (CONT.) — VARIES WITH SUPER — NOMINAL OFFSET = -10.3810 FT — -0.2500 NORMAL FROM FINISHED GRADE

BENT LINE	STATION	OFFSET	ELEVATION	ELEV+DL	NORTHING	EASTING	GIRDER LNTH	CRS-SLP
AH BRG 6	723+57.2200	-10.3808	5457.0294	457.0294	319280.3278	179995.2341	700.2822	-0.050000
F-1	723+71.3867	-10.3808	5457.5961	457.7431	319267.2683	180000.2853	714.2846	-0.050000
F-2	723+85.5534	-10.3808	5458.1628	458.4241	319254.2905	180005.5425	728.2869	-0.050000
F-3	723+99.7201	-10.3808	5458.7295	459.0725	319241.3975	180011.0045	742.2893	-0.050000
F-4	724+13.8868	-10.3808	5459.2961	459.6881	319228.5926	180016.6699	756.2917	-0.050000
F-5	724+28.0535	-10.3808	5459.8628	460.2711	319215.8789	180022.5372	770.2941	-0.050000
F-6	724+42.2202	-10.3808	5460.4295	460.8215	319203.2597	180028.6051	784.2965	-0.050000
F-7	724+56.3869	-10.3808	5460.9961	461.3391	319190.7382	180034.8719	798.2988	-0.050000
F-8	724+70.5536	-10.3808	5461.5628	461.8241	319178.3174	180041.3361	812.3012	-0.050000
F-9	724+84.7203	-10.3808	5462.1295	462.2765	319166.0004	180047.9961	826.3036	-0.050000
BK BRG 7	724+98.8870	-10.3808	5462.6961	462.6961	319153.7904	180054.8503	840.3060	-0.050000
CL PIER 7	725+01.8870	-10.3808	5462.8161		319151.2189	180056.3265	843.2712	-0.050000
AH BRG 7	725+04.8870	-10.3808	5462.9361	462.9361	319148.6522	180057.8113	846.2364	-0.050000
F-1	725+19.0536	-10.3808	5463.5028	463.6498	319136.5998	180064.9387	860.2387	-0.050000
F-2	725+33.2202	-10.3808	5464.0695	464.3308	319124.6617	180072.2561	874.2410	-0.050000
F-3	725+47.3868	-10.3808	5464.6361	464.9791	319112.8411	180079.7614	888.2432	-0.050000
F-4	725+61.5534	-10.3808	5465.2028	465.5948	319101.1406	180087.4529	902.2455	-0.050000
F-5	725+75.7200	-10.3808	5465.7694	466.1778	319089.5633	180095.3287	916.2478	-0.050000
F-6	725+89.8866	-10.3808	5466.3361	466.7281	319078.1122	180103.3866	930.2501	-0.050000
F-7	726+04.0532	-10.3808	5466.9028	467.2458	319066.7900	180111.6248	944.2524	-0.050000
F-8	726+18.2198	-10.3808	5467.4599	467.7213	319055.5997	180120.0413	958.2547	-0.050000
F-9	726+32.3864	-10.3808	5467.9739	468.1209	319044.5440	180128.6338	972.2569	-0.050000
BK BRG 8	726+46.5530	-10.3808	5468.4417	468.4417	319033.6256	180137.4002	986.2592	-0.050000
CL PIER 8	726+49.5530	-10.3808	5468.5348		319031.3314	180139.2787	989.2244	-0.050000
AH BRG 8	726+52.5530	-10.3808	5468.6259	468.6259	319029.0434	180141.1649	992.1896	-0.050000
F-1	726+67.9530	-10.3808	5469.0609	469.2289	319017.3990	180150.9676	1007.4110	-0.050000
F-2	726+83.3530	-10.3808	5469.4413	469.7400	319005.9249	180160.9690	1022.6324	-0.050000
F-3	726+98.7530	-10.3808	5469.7672	470.1592	318994.6246	180171.1665	1037.8538	-0.050000
F-4	727+14.1530	-10.3808	5470.0386	470.4866	318983.5015	180181.5570	1053.0751	-0.050000
F-5	727+29.5530	-10.3808	5470.2555	470.7221	318972.5587	180192.1372	1068.2965	-0.050000
F-6	727+44.9530	-10.3808	5470.4178	470.8658	318961.7996	180202.9041	1083.5179	-0.050000
F-7	727+60.3530	-10.3808	5470.5256	470.9176	318951.2274	180213.8546	1098.7393	-0.050000
F-8	727+75.7530	-10.3808	5470.5789	470.8775	318940.8452	180224.9854	1113.9607	-0.050000
F-9	727+91.1530	-10.3808	5470.5776	470.7456	318930.6560	180236.2931	1129.1820	-0.050000
BK BRG 9	728+06.5530	-10.3808	5470.5219	470.5219	318920.6629	180247.7744	1144.4034	-0.050000
CL PIER 9	728+09.5530	-10.3808	5470.5047		318918.7392	180250.0309	1147.3686	-0.050000
AH BRG 9	728+12.5530	-10.3808	5470.4854	470.4854	318916.8231	180252.2940	1150.3338	-0.050000
F-1	728+27.9530	-10.3808	5470.3539	470.5249	318907.1074	180264.0110	1165.5552	-0.050000
F-2	728+43.3530	-10.3808	5470.1678	470.4718	318897.5947	180275.8934	1180.7766	-0.050000
F-3	728+58.7530	-10.3808	5469.9272	470.3262	318888.2878	180287.9378	1195.9979	-0.050000
F-4	728+74.1530	-10.3808	5469.6321	470.0881	318879.1895	180300.1405	1211.2193	-0.050000
F-5	728+89.5530	-10.3808	5469.2825	469.7575	318870.3025	180312.4980	1226.4407	-0.050000
F-6	729+04.9530	-10.3808	5468.8783	469.3343	318861.6295	180325.0065	1241.6621	-0.050000
F-7	729+20.3530	-10.3808	5468.4196	468.8186	318853.1731	180337.6624	1256.8834	-0.050000
F-8	729+35.7530	-10.3808	5467.9064	468.2104	318844.9355	180350.4620	1272.1048	-0.050000
F-9	729+51.1530	-10.3808	5467.3387	467.5097	318836.9195	180363.4014	1287.3262	-0.050000
BK BRG 10	729+66.5530	-10.3808	5466.7446	466.7446	318829.1272	180376.4767	1302.5476	-0.050000
CL PIER 10	729+69.5530	-10.3808	5466.6289		318827.6355	180379.0393	1305.5128	-0.050000
AH BRG 10	729+72.5530	-10.3808	5466.5132	466.5132	318826.1524	180381.6070	1308.4780	-0.050000
F-1	729+87.9530	-10.3808	5465.9192	466.0932	318818.6749	180394.8650	1323.6994	-0.050000
F-2	730+03.3530	-10.3808	5465.3251	465.6345	318811.4267	180408.2496	1338.9207	-0.050000
F-3	730+18.7530	-10.3808	5464.7311	465.1371	318804.4099	180421.7569	1354.1421	-0.050000
F-4	730+34.1530	-10.3808	5464.1371	464.6011	318797.6265	180435.3830	1369.3635	-0.050000
F-5	730+49.5530	-10.3808	5463.5430	464.0264	318791.0786	180449.1238	1384.5849	-0.050000
F-6	730+64.9530	-10.3808	5462.9490	463.4130	318784.7681	180462.9752	1399.8062	-0.050000
F-7	730+80.3530	-10.3808	5462.3550	462.7610	318778.6968	180476.9332	1415.0276	-0.050000
F-8	730+95.7530	-10.3808	5461.7609	462.0703	318772.8665	180490.9935	1430.2490	-0.050000
F-9	731+11.1530	-10.3808	5461.1670	461.3410	318767.2791	180505.1521	1445.4704	-0.050000
BK BRG 11	731+26.5530	-10.3808	5460.5902	460.5902	318761.9361	180519.4047	1460.6918	-0.050000
CL PIER 11	731+29.5530	-10.3808	5460.4813		318760.9238	180522.1917	1463.6570	-0.050000
AH BRG 11	731+32.5530	-10.3808	5460.3736	460.3736	318759.9210	180524.9822	1466.6222	-0.050000
F-1	731+45.7530	-10.3808	5459.9131	460.0091	318755.6195	180537.2995	1479.6691	-0.050000
F-2	731+58.9530	-10.3808	5459.4747	459.6454	318751.5001	180549.6789	1492.7160	-0.050000
F-3	731+72.1530	-10.3808	5459.0583	459.2823	318747.5637	180562.1177	1505.7628	-0.050000

NOTES:

See Sheet B60 for notes.

Quantities			
		INITIAL	DATE
Quantities By			
Checked By			

Detail			
		INITIAL	DATE
Detailed By		ERS	11/09
Checked By		KCS	12/09

Design			
		INITIAL	DATE
Designed By		SA	11/09
Checked By			

Revision Dates	
MM/YY	(Preliminary Stage Only)

18026 1:54:38 PM S:\Tranpro\10000237S\14679\Consultants\Bridge\Drawings\14679_pBD-N705.dgn

Print Date: 12/31/2009
File Name: 14679_pBD-N705.dgn
Horiz. Scale: 1:1 Vert. Scale: As Noted
Staff Bridge Branch - Unit 0224 Unit Leader: MH

PBSJ 4601 DTC Boulevard Suite 700 Denver, CO 80237

Sheet Revisions		
Date:	Comments	Init.

Colorado Department of Transportation
DOT DEPARTMENT OF TRANSPORTATION
8833 South Wadsworth Court
Littleton, CO 80128
Phone: 303-972-9112 FAX: 303-972-9114
Region 6 RLB

As Constructed
No Revisions:
Revised:
Void:

SB SANTA FE TO EB C470 RAMP
BRIDGE DECK ELEVATIONS
(7 OF 13)

Designer: S. Abraham
Detailer: E. Schawo
Sheet Subset: Bridge
Structure Numbers: F-16-YE
Subset Sheets: B66 of 72

Project No./Code
ES6 0852-103
17679
Sheet Number 255

GIRDER A RIGHT (CONT.) VARIES WITH SUPER NOMINAL OFFSET = -10.3810 FT -0.2500 NORMAL FROM FINISHED GRADE

BENT LINE	STATION	OFFSET	ELEVATION	ELEV+DL	NORTHING	EASTING	GIRDER LNTH	CRS-SLP
F-4	731+85.3530	-10.3808	5458.6640	458.9200	318743.8113	180574.6132	1518.8097	-0.050000
F-5	731+98.5530	-10.3808	5458.2917	458.5584	318740.2435	180587.1627	1531.8566	-0.050000
F-6	732+11.7530	-10.3808	5457.9415	458.1975	318736.8612	180599.7634	1544.9035	-0.050000
F-7	732+24.9530	-10.3808	5457.6133	457.8373	318733.6651	180612.4126	1557.9504	-0.050000
F-8	732+38.1530	-10.3808	5457.3071	457.4778	318730.6559	180625.1077	1570.9973	-0.050000
F-9	732+51.3530	-10.3808	5457.0230	457.1190	318727.8342	180637.8456	1584.0442	-0.050000
BK BRG 12	732+64.5530	-10.3808	5456.7610	456.7610	318725.2008	180650.6239	1597.0911	-0.050000
CL PIER 12	732+67.5530	-10.3808	5456.7045		318724.6286	180653.5333	1600.0563	-0.050000
AH BRG 12	732+70.5530	-10.3808	5456.6491	456.6491	318724.0661	180656.4447	1603.0215	-0.050000
F-1	732+80.4530	-10.3808	5456.4746	456.5106	318722.2793	180666.0653	1612.8067	-0.050000
F-2	732+90.3530	-10.3808	5456.3124	456.3764	318720.5990	180675.7051	1622.5919	-0.050000
F-3	733+00.2530	-10.3808	5456.1627	456.2467	318719.0254	180685.3629	1632.3770	-0.050000
F-4	733+10.1530	-10.3808	5456.0253	456.1213	318717.5587	180695.0375	1642.1622	-0.050000
F-5	733+20.0530	-10.3808	5455.9004	456.0004	318716.1992	180704.7276	1651.9474	-0.050000
F-6	733+29.9530	-10.3808	5455.7878	455.8838	318714.9469	180714.4323	1661.7325	-0.050000
F-7	733+39.8530	-10.3808	5455.6877	455.7717	318713.8021	180724.1503	1671.5177	-0.050000
F-8	733+49.7530	-10.3808	5455.5999	455.6639	318712.7648	180733.8802	1681.3029	-0.050000
F-9	733+59.6530	-10.3809	5455.5258	455.5618	318711.8353	180743.6211	1691.0880	-0.049886
BK BRG 13	733+69.5530	-10.3816	5455.4726	455.4726	318711.0141	180753.3717	1700.8732	-0.048943
CL PIER 13	733+72.5530	-10.3820	5455.4609		318710.7868	180756.3282	1703.8384	-0.048470
END BRIDGE	733+77.5530	-10.3827	5455.4459		318710.4299	180761.2572	1708.7804	-0.047487

HCL & PGL PARALLEL TO HORIZONTAL CONTROL 0.250000 FEET BELOW FINISHED GRADE

BENT LINE	STATION	OFFSET	ELEVATION	ELEV+DL	NORTHING	EASTING	GIRDER LNTH	CRS-SLP
STA BRIDGE	716+48.7200	0.0000	5429.2088		319966.3900	180009.4400	0.0000	+/-.030000
CL PIER 1	716+53.7200	0.0000	5429.4088		319961.8403	180007.3662	5.0000	+/-.032427
AH BRG 1	716+56.7200	0.0000	5429.5288		319959.1050	180006.1341	8.0000	+/-.033883
F-1	716+69.4700	0.0000	5430.0388		319947.4344	180001.0004	20.7500	+/-.039972
F-2	716+82.2200	0.0000	5430.5488		319935.6917	179996.0334	33.5000	+/-.044809
F-3	716+94.9700	0.0000	5431.0588		319923.8796	179991.2342	46.2500	+/-.048068
F-4	717+07.7200	0.0000	5431.5688		319912.0002	179986.6038	59.0000	+/-.049748
F-5	717+20.4700	0.0000	5432.0788		319900.0561	179982.1431	71.7500	+/-.050000
F-6	717+33.2200	0.0000	5432.5888		319888.0497	179977.8530	84.5000	+/-.050000
F-7	717+45.9700	0.0000	5433.0988		319875.9834	179973.7343	97.2500	+/-.050000
F-8	717+58.7200	0.0000	5433.6088		319863.8596	179969.7879	110.0000	+/-.050000
F-9	717+71.4700	0.0000	5434.1188		319851.6808	179966.0147	122.7500	+/-.050000
BK BRG 2	717+84.2200	0.0000	5434.6288		319839.4496	179962.4153	135.5000	+/-.050000
CL PIER 2	717+87.2200	0.0000	5434.7488		319836.5642	179961.5938	138.5000	+/-.050000
AH BRG 2	717+90.2200	0.0000	5434.8688		319833.6762	179960.7818	141.5000	+/-.050000
F-1	718+00.6200	0.0000	5435.2848		319823.6436	179958.0423	151.9000	+/-.050000
F-2	718+11.0200	0.0000	5435.7008		319813.5797	179955.4195	162.3000	+/-.050000
F-3	718+21.4200	0.0000	5436.1168		319803.4861	179952.9140	172.7000	+/-.050000
F-4	718+31.8200	0.0000	5436.5328		319793.3641	179950.5257	183.1000	+/-.050000
F-5	718+42.2200	0.0000	5436.9488		319783.2150	179948.2553	193.5000	+/-.050000
F-6	718+52.6200	0.0000	5437.3648		319773.0402	179946.1030	203.9000	+/-.050000
F-7	718+63.0200	0.0000	5437.7808		319762.8412	179944.0692	214.3000	+/-.050000
F-8	718+73.4200	0.0000	5438.1968		319752.6191	179942.1538	224.7000	+/-.050000
F-9	718+83.8200	0.0000	5438.6128		319742.3754	179940.3574	235.1000	+/-.050000
BK BRG 3	718+94.2200	0.0000	5439.0288		319732.1117	179938.6802	245.5000	+/-.050000
CL PIER 3	718+97.2200	0.0000	5439.1488		319729.1474	179938.2186	248.5000	+/-.050000
AH BRG 3	719+00.2200	0.0000	5439.2688		319726.1816	179937.7668	251.5000	+/-.050000
F-1	719+12.8200	0.0000	5439.7728		319713.7093	179935.9783	264.1000	+/-.050000
F-2	719+25.4200	0.0000	5440.2768		319701.2130	179934.3656	276.7000	+/-.050000
F-3	719+38.0200	0.0000	5440.7808		319688.6953	179932.9289	289.3000	+/-.050000
F-4	719+50.6200	0.0000	5441.2848		319676.1586	179931.6686	301.9000	+/-.050000
F-5	719+63.2200	0.0000	5441.7888		319663.6054	179930.5850	314.5000	+/-.050000
F-6	719+75.8200	0.0000	5442.2928		319651.0381	179929.6781	327.1000	+/-.050000
F-7	719+88.4200	0.0000	5442.7968		319638.4594	179928.9482	339.7000	+/-.050000
F-8	720+01.0200	0.0000	5443.3008		319625.8716	179928.3955	352.3000	+/-.050000
F-9	720+13.6200	0.0000	5443.8048		319613.2774	179928.0201	364.9000	+/-.050000
BK BRG 4	720+26.2200	0.0000	5444.3088		319600.6790	179927.8220	377.5000	+/-.050000
CL PIER 4	720+29.2200	0.0000	5444.4288		319597.6791	179927.8009	380.5000	+/-.050000
AH BRG 4	720+32.2200	0.0000	5444.5488		319594.6791	179927.7900	383.5000	+/-.050000
F-1	720+48.1200	0.0000	5445.1848		319578.7797	179927.8997	399.4000	+/-.050000
F-2	720+64.0200	0.0000	5445.8208		319562.8847	179928.2919	415.3000	+/-.050000
F-3	720+79.9200	0.0000	5446.4568		319546.9993	179928.9664	431.2000	+/-.050000
F-4	720+95.8200	0.0000	5447.0928		319531.1282	179929.9229	447.1000	+/-.050000

HCL & PGL (CONT.) PARALLEL TO HORIZONTAL CONTROL 0.250000 FEET BELOW FINISHED GRADE

BENT LINE	STATION	OFFSET	ELEVATION	ELEV+DL	NORTHING	EASTING	GIRDER LNTH	CRS-SLP
F-5	721+11.7200	0.0000	5447.7288		319515.2768	179931.1612	463.0000	+/-.050000
F-6	721+27.6200	0.0000	5448.3648		319499.4498	179932.6810	478.9000	+/-.050000
F-7	721+43.5200	0.0000	5449.0008		319483.6523	179934.4817	494.8000	+/-.050000
F-8	721+59.4200	0.0000	5449.6368		319467.8893	179936.5627	510.7000	+/-.050000
F-9	721+75.3200	0.0000	5450.2728		319452.1657	179938.9233	526.6000	+/-.050000
BK BRG 5	721+91.2200	0.0000	5450.9088		319436.4866	179941.5630	542.5000	+/-.050000
CL PIER 5	721+94.2200	0.0000	5451.0288		319433.5336	179942.0923	545.5000	+/-.050000
AH BRG 5	721+97.2200	0.0000	5451.1488		319430.5825	179942.6314	548.5000	+/-.050000
F-1	722+12.6200	0.0000	5451.7648		319415.4626	179945.5546	563.9000	+/-.050000
F-2	722+28.0200	0.0000	5452.3808		319400.3953	179948.7376	579.3000	+/-.050000
F-3	722+43.4200	0.0000	5452.9968		319385.3851	179952.1792	594.7000	+/-.050000
F-4	722+58.8200	0.0000	5453.6128		319370.4362	179955.8787	610.1000	+/-.050000
F-5	722+74.2200	0.0000	5454.2288		319355.5532	179959.8348	625.5000	+/-.050000
F-6	722+89.6200	0.0000	5454.8448		319340.7405	179964.0464	640.9000	+/-.050000
F-7	723+05.0200	0.0000	5455.4608		319326.0024	179968.5123	656.3000	+/-.050000
F-8	723+20.4200	0.0000	5456.0768		319311.3434	179973.2310	671.7000	+/-.050000
F-9	723+35.8200	0.0000	5456.6928		319296.7677	179978.2013	687.1000	+/-.050000
BK BRG 6	723+51.2200	0.0000	5457.3088		319282.2797	179983.4217	702.5000	+/-.050000
CL PIER 6	723+54.2200	0.0000	5457.4288		319279.4680	179984.4675	705.5000	+/-.050000
AH BRG 6	723+57.2200	0.0000	5457.5488		319276.6597	179985.5229	708.5000	+/-.050000
F-1	723+71.3867	0.0000	5458.1155		319263.4470	179990.6333	722.6667	+/-.050000
F-2	723+85.5534	0.0000	5458.6821		319250.3169	179995.9523	736.8334	+/-.050000
F-3	723+99.7201	0.0000	5459.2488		319237.2726	180001.4783	751.0001	+/-.050000
F-4	724+13.8868	0.0000	5459.8155		319224.3174	180007.2102	765.1668	+/-.050000
F-5	724+28.0535	0.0000	5460.3821		319211.4546	180013.1464	779.3335	+/-.050000
F-6	724+42.2202	0.0000	5460.9488		319198.6873	180019.2854	793.5002	+/-.050000
F-7	724+56.3869	0.0000	5461.5155		319186.0188	180025.6259	807.6669	+/-.050000
F-8	724+70.5536	0.0000	5462.0821		319173.4523	180032.1659	821.8336	+/-.050000
F-9	724+84.7203	0.0000	5462.6488		319160.9908	180038.9041	836.0003	+/-.050000
BK BRG 7	724+98.8870	0.0000	5463.2155		319148.6376	180045.8386	850.1670	+/-.050000
CL PIER 7	725+01.8870	0.0000	5463.3355		319146.0357	180047.3322	853.1670	+/-.050000
AH BRG 7	725+04.8870	0.0000	5463.4555		319143.4389	180048.8344	856.1670	+/-.050000
F-1	725+19.0536	0.0000	5464.0221		319131.2452	180056.0455	870.3336	+/-.050000
F-2	725+33.2202	0.0000	5464.5888		319119.1671	180063.4487	884.5002	+/-.050000
F-3	725+47.3868	0.0000	5465.1555		319107.2076	180071.0422	898.6668	+/-.050000
F-4	725+61.5534	0.0000	5465.7221		319095.3699	180078.8239	912.8334	+/-.050000
F-5	725+75.7200	0.0000	5466.2888		319083.6567	180086.7921	927.0000	+/-.050000
F-6	725+89.8866	0.0000	5466.8555		319072.0712	180094.9446	941.1666	+/-.050000
F-7	726+04.0532	0.0000	5467.4221		319060.6162	180103.2795	955.3332	+/-.050000
F-8	726+18.2198	0.0000	5467.9793		319049.2945	180111.7947	969.4998	+/-.050000
F-9	726+32.3864	0.0000	5468.4932		319038.1091	180120.4880	983.6664	+/-.050000
BK BRG 8	726+46.5530	0.0000	5468.9610		319027.0626	180129.3572	997.8330	+/-.050000
CL PIER 8	726+49.5530	0.0000	5469.0542		319024.7414	180131.2579	1000.8330	+/-.050000
AH BRG 8	726+52.5530	0.0000	5469.1453		319022.4266	180133.1662	1003.8330	+/-.050000
F-1	726+67.9530	0.0000	5469.5802		319010.6456	180143.0839	1019.2330	+/-.050000
F-2	726+83.3530	0.0000	5469.9607		318999.0368	180153.2028	1034.6330	+/-.050000
F-3	726+98.7530	0.0000	5470.2866		318987.6039	180163.5198	1050.0330	+/-.050000
F-4	727+14.1530	0.0000	5470.5580		318976.3503	180174.0322	1065.4330	+/-.050000
F-5	727+29.5530	0.0000	5470.7748		318965.2791	180184.7366	1080.8330	+/-.050000
F-6	727+44.9530	0.0000	5470.9371		318954.3938	180195.6298	1096.2330	+/-.050000
F-7	727+60.3530	0.0000	5471.0450		318943.6975	180206.7088	1111.6330	+/-.050000
F-8	727+75.7530	0.0000	5471.0982		318933.1934	180217.9702	1127.0330	+/-.050000
F-9	727+91.1530	0.0000	5471.0970		318922.8846	180229.4107	1142.4330	+/-.050000
BK BRG 9	728+06.5530	0.0000	5471.0412		318912.7742	180241.0267	1157.8330	+/-.050000
CL PIER 9	728+09.5530	0.0000	5471.0240		318910.8280	180243.3098	1160.8330	+/-.050000
AH BRG 9	728+12.5530	0.0000	5471.0047		318908.8895	180245.5993	1163.8330	+/-.050000
F-1	728+27.9530	0.0000	5470.8732		318899.0597	180257.4538	1179.2330	+/-.050000
F-2	728+43.3530	0.0000	5470.6871		318889.4353	180269.4757	1194.6330	+/-.050000
F-3	728+58.7530	0.0000	5470.4466		318880.0192	180281.6614	1210.0330	+/-.050000
F-4	728+74.1530	0.0000	5470.1514		318870.8142	180294.0074	1225.4330	+/-.050000
F-5	728+89.5530	0.0000	5469.8018		318861.8230	180306.5098	1240.8330	+/-.050000
F-6	729+04.9530	0.0000	5469.3977		318853.0481	180319.1651	1256.2330	+/-.050000

NOTES:

See Sheet B60 for notes.

Design			Detail			Quantities		
	INITIAL	DATE		INITIAL	DATE		INITIAL	DATE
Designed By	SA	11/09	Detailed By	ERS	11/09	Quantities By		
Checked By			Checked By	KCS	12/09	Checked By		

Revision Dates (Preliminary Stage Only)
MM/YY

18026 1:54:39 PM S:\Tranproj\100002375\14679\Consultants\Bridge\Drawings\14679_pBD-N705.dgn

Print Date: 12/31/2009
File Name: 14679_pBD-N705.dgn
Horiz. Scale: 1:1 Vert. Scale: As Noted
Staff Bridge Branch - Unit 0224 Unit Leader: MH

PBSJ 4601 DTC Boulevard Suite 700 Denver, CO 80237

Sheet Revisions		
Date:	Comments	Init.

Colorado Department of Transportation
DOT DEPARTMENT OF TRANSPORTATION
8833 South Wadsworth Court
Littleton, CO 80128
Phone: 303-972-9112 FAX: 303-972-9114
Region 6 RLB

As Constructed
No Revisions:
Revised:
Void:

SB SANTA FE TO EB C470 RAMP
BRIDGE DECK ELEVATIONS
(8 OF 13)

Designer: S. Abraham
Detailer: E. Schawo
Sheet Subset: Bridge
Structure Numbers F-16-YE
Subset Sheets: B67 of 72

Project No./Code
ES6 0852-103
17679
Sheet Number 256

HCL & PGL (CONT.) PARALLEL TO HORIZONTAL CONTROL 0.250000 FEET BELOW FINISHED GRADE

BENT LINE	STATION	OFFSET	ELEVATION	ELEV+DL	NORTHING	EASTING	GIRDER LNTH	CRS-SLP
F-7	729+20.3530	0.0000	5468.9390		318844.4924	180331.9696	1271.6330	+/-.050000
F-8	729+35.7530	0.0000	5468.4258		318836.1583	180344.9192	1287.0330	+/-.050000
F-9	729+51.1530	0.0000	5467.8580		318828.0481	180358.0105	1302.4330	+/-.050000
BK BRG 10	729+66.5530	0.0000	5467.2640		318820.1644	180371.2393	1317.8330	+/-.050000
CL PIER 10	729+69.5530	0.0000	5467.1483		318818.6552	180373.8321	1320.8330	+/-.050000
AH BRG 10	729+72.5530	0.0000	5467.0326		318817.1547	180376.4298	1323.8330	+/-.050000
F-1	729+87.9530	0.0000	5466.4385		318809.5894	180389.8433	1339.2330	+/-.050000
F-2	730+03.3530	0.0000	5465.8445		318802.2562	180403.3850	1354.6330	+/-.050000
F-3	730+18.7530	0.0000	5465.2505		318795.1571	180417.0509	1370.0330	+/-.050000
F-4	730+34.1530	0.0000	5464.6564		318788.2941	180430.8369	1385.4330	+/-.050000
F-5	730+49.5530	0.0000	5464.0624		318781.6693	180444.7389	1400.8330	+/-.050000
F-6	730+64.9530	0.0000	5463.4684		318775.2848	180458.7529	1416.2330	+/-.050000
F-7	730+80.3530	0.0000	5462.8743		318769.1422	180472.8746	1431.6330	+/-.050000
F-8	730+95.7530	0.0000	5462.2803		318763.2436	180487.0999	1447.0330	+/-.050000
F-9	731+11.1530	0.0000	5461.6863		318757.5906	180501.4247	1462.4330	+/-.050000
BK BRG 11	731+26.5530	0.0000	5461.1096		318752.1849	180515.8445	1477.8330	+/-.050000
CL PIER 11	731+29.5530	0.0000	5461.0007		318751.1607	180518.6643	1480.8330	+/-.050000
AH BRG 11	731+32.5530	0.0000	5460.8930		318750.1460	180521.4876	1483.8330	+/-.050000
F-1	731+45.7530	0.0000	5460.4325		318745.7940	180533.9493	1497.0330	+/-.050000
F-2	731+58.9530	0.0000	5459.9941		318741.6263	180546.4739	1510.2330	+/-.050000
F-3	731+72.1530	0.0000	5459.5777		318737.6438	180559.0588	1523.4330	+/-.050000
F-4	731+85.3530	0.0000	5459.1833		318733.8474	180571.7009	1536.6330	+/-.050000
F-5	731+98.5530	0.0000	5458.8110		318730.2377	180584.3976	1549.8330	+/-.050000
F-6	732+11.7530	0.0000	5458.4608		318726.8157	180597.1463	1563.0330	+/-.050000
F-7	732+24.9530	0.0000	5458.1326		318723.5821	180609.9440	1576.2330	+/-.050000
F-8	732+38.1530	0.0000	5457.8265		318720.5376	180622.7879	1589.4330	+/-.050000
F-9	732+51.3530	0.0000	5457.5424		318717.6827	180635.6754	1602.6330	+/-.050000
BK BRG 12	732+64.5530	0.0000	5457.2803		318715.0184	180648.6035	1615.8330	+/-.050000
CL PIER 12	732+67.5530	0.0000	5457.2238		318714.4395	180651.5472	1618.8330	+/-.050000
AH BRG 12	732+70.5530	0.0000	5457.1685		318713.8704	180654.4927	1621.8330	+/-.050000
F-1	732+80.4530	0.0000	5456.9939		318712.0627	180664.2262	1631.7330	+/-.050000
F-2	732+90.3530	0.0000	5456.8318		318710.3625	180673.9791	1641.6330	+/-.050000
F-3	733+00.2530	0.0000	5456.6820		318708.7706	180683.7502	1651.5330	+/-.050000
F-4	733+10.1530	0.0000	5456.5447		318707.2867	180693.5383	1661.4330	+/-.050000
F-5	733+20.0530	0.0000	5456.4197		318705.9112	180703.3422	1671.3330	+/-.050000
F-6	733+29.9530	0.0000	5456.3072		318704.6442	180713.1608	1681.2330	+/-.050000
F-7	733+39.8530	0.0000	5456.2070		318703.4859	180722.9927	1691.1330	+/-.050000
F-8	733+49.7530	0.0000	5456.1193		318702.4365	180732.8369	1701.0330	+/-.050000
F-9	733+59.6530	0.0000	5456.0439		318701.4960	180742.6921	1710.9330	+/-.049886
BK BRG 13	733+69.5530	0.0000	5455.9810		318700.6645	180752.5571	1720.8330	+/-.048943
CL PIER 13	733+72.5530	0.0000	5455.9644		318700.4341	180755.5482	1723.8330	+/-.048470
END BRIDGE	733+77.5530	0.0000	5455.9392		318700.0723	180760.5351	1728.8330	+/-.047487

GIRDER B LEFT VARIES WITH SUPER NOMINAL OFFSET = 0.3766 FT -0.2500 NORMAL FROM FINISHED GRADE

BENT LINE	STATION	OFFSET	ELEVATION	ELEV+DL	NORTHING	EASTING	GIRDER LNTH	CRS-SLP
STA BRIDGE	716+48.7200	0.3719	5429.2198		319966.5452	180009.1020	0.0000	+0.030000
CL PIER 1	716+53.7200	0.3725	5429.4207		319961.9939	180007.0268	5.0021	+0.032427
AH BRG 1	716+56.7200	0.3729	5429.5413	429.5413	319959.2576	180005.7939	8.0034	+0.033883
F-1	716+69.4700	0.3743	5430.0536	430.1676	319947.5827	180000.6567	20.7587	+0.039972
F-2	716+82.2200	0.3754	5430.5654	430.7680	319935.8355	179995.6867	33.5141	+0.044809
F-3	716+94.9700	0.3762	5431.0766	431.3426	319924.0187	179990.8848	46.2695	+0.048068
F-4	717+07.7200	0.3766	5431.5872	431.8912	319912.1345	179986.2520	59.0248	+0.049748
F-5	717+20.4700	0.3766	5432.0973	432.4140	319900.1854	179981.7894	71.7802	+0.050000
F-6	717+33.2200	0.3766	5432.6073	432.9113	319888.1739	179977.4974	84.5356	+0.050000
F-7	717+45.9700	0.3766	5433.1173	433.3833	319876.1024	179973.3770	97.2909	+0.050000
F-8	717+58.7200	0.3766	5433.6273	433.8300	319863.9736	179969.4289	110.0463	+0.050000
F-9	717+71.4700	0.3766	5434.1373	434.2513	319851.7897	179965.6541	122.8016	+0.050000
BK BRG 2	717+84.2200	0.3766	5434.6473	434.6473	319839.5533	179962.0532	135.5570	+0.050000
CL PIER 2	717+87.2200	0.3766	5434.7673		319836.6668	179961.2313	138.5583	+0.050000
AH BRG 2	717+90.2200	0.3766	5434.8873	434.8873	319833.7775	179960.4191	141.5595	+0.050000
F-1	718+00.6200	0.3766	5435.3033	435.3393	319823.7406	179957.6784	151.9639	+0.050000
F-2	718+11.0200	0.3766	5435.7193	435.7833	319813.6726	179955.0545	162.3683	+0.050000
F-3	718+21.4200	0.3766	5436.1353	436.2193	319803.5748	179952.5479	172.7727	+0.050000
F-4	718+31.8200	0.3766	5436.5513	436.6473	319793.4485	179950.1587	183.1770	+0.050000
F-5	718+42.2200	0.3766	5436.9673	437.0673	319783.2951	179947.8873	193.5814	+0.050000
F-6	718+52.6200	0.3766	5437.3833	437.4793	319773.1161	179945.7341	203.9858	+0.050000
F-7	718+63.0200	0.3766	5437.7993	437.8833	319762.9126	179943.6993	214.3902	+0.050000

GIRDER B LEFT (CONT.) VARIES WITH SUPER NOMINAL OFFSET = 0.3766 FT -0.2500 NORMAL FROM FINISHED GRADE

BENT LINE	STATION	OFFSET	ELEVATION	ELEV+DL	NORTHING	EASTING	GIRDER LNTH	CRS-SLP
F-8	718+73.4200	0.3766	5438.2153	438.2793	319752.6863	179941.7833	224.7945	+0.050000
F-9	718+83.8200	0.3766	5438.6313	438.6673	319742.4383	179939.9861	235.1989	+0.050000
BK BRG 3	718+94.2200	0.3766	5439.0473	439.0473	319732.1702	179938.3082	245.6033	+0.050000
CL PIER 3	718+97.2200	0.3766	5439.1673		319729.2047	179937.8463	248.6046	+0.050000
AH BRG 3	719+00.2200	0.3766	5439.2873	439.2873	319726.2377	179937.3945	251.6058	+0.050000
F-1	719+12.8200	0.3766	5439.7913	439.8783	319713.7601	179935.6052	264.2111	+0.050000
F-2	719+25.4200	0.3766	5440.2953	440.4500	319701.2585	179933.9917	276.8164	+0.050000
F-3	719+38.0200	0.3766	5440.7993	441.0023	319688.7356	179932.5545	289.4217	+0.050000
F-4	719+50.6200	0.3766	5441.3033	441.5353	319676.1936	179931.2936	302.0270	+0.050000
F-5	719+63.2200	0.3766	5441.8073	442.0490	319663.6351	179930.2095	314.6323	+0.050000
F-6	719+75.8200	0.3766	5442.3113	442.5433	319651.0626	179929.3023	327.2376	+0.050000
F-7	719+88.4200	0.3766	5442.8153	443.0183	319638.4786	179928.5721	339.8429	+0.050000
F-8	720+01.0200	0.3766	5443.3193	443.4740	319625.8855	179928.0192	352.4482	+0.050000
F-9	720+13.6200	0.3766	5443.8233	443.9103	319613.2859	179927.6435	365.0535	+0.050000
BK BRG 4	720+26.2200	0.3766	5444.3273	444.3273	319600.6823	179927.4453	377.6588	+0.050000
CL PIER 4	720+29.2200	0.3766	5444.4473		319597.6811	179927.4243	380.6601	+0.050000
AH BRG 4	720+32.2200	0.3766	5444.5673	444.5673	319594.6799	179927.4134	383.6614	+0.050000
F-1	720+48.1200	0.3766	5445.2033	445.4163	319578.7737	179927.5231	399.5680	+0.050000
F-2	720+64.0200	0.3766	5445.8393	446.2180	319562.8721	179927.9155	415.4747	+0.050000
F-3	720+79.9200	0.3766	5446.4753	446.9723	319546.9800	179928.5902	431.3814	+0.050000
F-4	720+95.8200	0.3766	5447.1113	447.6793	319531.1023	179929.5472	447.2881	+0.050000
F-5	721+11.7200	0.3766	5447.7473	448.3390	319515.2441	179930.7861	463.1948	+0.050000
F-6	721+27.6200	0.3766	5448.3833	448.9513	319499.4105	179932.3064	479.1015	+0.050000
F-7	721+43.5200	0.3766	5449.0193	449.5163	319483.6063	179934.1079	495.0082	+0.050000
F-8	721+59.4200	0.3766	5449.6553	450.0340	319467.8366	179936.1897	510.9149	+0.050000
F-9	721+75.3200	0.3766	5450.2913	450.5043	319452.1065	179938.5514	526.8216	+0.050000
BK BRG 5	721+91.2200	0.3766	5450.9273	450.9273	319436.4207	179941.1922	542.7283	+0.050000
CL PIER 5	721+94.2200	0.3766	5451.0473		319433.4666	179941.7216	545.7295	+0.050000
AH BRG 5	721+97.2200	0.3766	5451.1673	451.1673	319430.5141	179942.2610	548.7308	+0.050000
F-1	722+12.6200	0.3766	5451.7833	451.9663	319415.3879	179945.1855	564.1373	+0.050000
F-2	722+28.0200	0.3766	5452.3993	452.7247	319400.3143	179948.3697	579.5437	+0.050000
F-3	722+43.4200	0.3766	5453.0153	453.4423	319385.2978	179951.8129	594.9502	+0.050000
F-4	722+58.8200	0.3766	5453.6313	454.1193	319370.3425	179955.5139	610.3567	+0.050000
F-5	722+74.2200	0.3766	5454.2473	454.7557	319355.4534	179959.4716	625.7632	+0.050000
F-6	722+89.6200	0.3766	5454.8633	455.3513	319340.6344	179963.6850	641.1697	+0.050000
F-7	723+05.0200	0.3766	5455.4793	455.9063	319325.8901	179968.1528	656.5761	+0.050000
F-8	723+20.4200	0.3766	5456.0953	456.4207	319311.2249	179972.8736	671.9826	+0.050000
F-9	723+35.8200	0.3766	5456.7113	456.8943	319296.6431	179977.8459	687.3891	+0.050000
BK BRG 6	723+51.2200	0.3766	5457.3273	457.3273	319282.1490	179983.0684	702.7956	+0.050000
CL PIER 6	723+54.2200	0.3766	5457.4473		319279.3360	179984.1148	705.7968	+0.050000
AH BRG 6	723+57.2200	0.3766	5457.5673	457.5673	319276.5266	179985.1705	708.7981	+0.050000
F-1	723+71.3867	0.3766	5458.1340	458.2900	319263.3084	179990.2832	722.9708	+0.050000
F-2	723+85.5534	0.3766	5458.7007	458.9780	319250.1728	179995.6043	737.1434	+0.050000
F-3	723+99.7201	0.3766	5459.2673	459.6313	319237.1230	180001.1327	751.3161	+0.050000
F-4	724+13.8868	0.3766	5459.8340	460.2500	319224.1623	180006.8670	765.4887	+0.050000
F-5	724+28.0535	0.3766	5460.4007	460.8340	319211.2941	180012.8057	779.6614	+0.050000
F-6	724+42.2202	0.3766	5460.9673	461.3833	319198.5214	180018.9474	793.8341	+0.050000
F-7	724+56.3869	0.3766	5461.5340	461.8980	319185.8476	180025.2904	808.0067	+0.050000
F-8	724+70.5536	0.3766	5462.1007	462.3780	319173.2757	180031.8332	822.1794	+0.050000
F-9	724+84.7203	0.3766	5462.6673	462.8233	319160.8090	180038.5742	836.3520	+0.050000
BK BRG 7	724+98.8870	0.3766	5463.2340	463.2340	319148.4506	180045.5117	850.5247	+0.050000
CL PIER 7	725+01.8870	0.3766	5463.3540		319145.8477	180047.0059	853.5260	+0.050000
AH BRG 7	725+04.8870	0.3766	5463.4740	463.4740	319143.2498	180048.5087	856.5272	+0.050000
F-1	725+19.0536	0.3766	5464.0407	464.1967	319131.0509	180055.7228	870.6998	+0.050000
F-2	725+33.2202	0.3766	5464.6073	464.8847	319118.9676	180063.1291	884.8723	+0.050000
F-3	725+47.3868	0.3766	5465.1740	465.5380	319107.0032	180070.7258	899.0449	+0.050000
F-4	725+61.5534	0.3766	5465.7407	466.1567	319095.1604	180078.5108	913.2175	+0.050000
F-5	725+75.7200	0.3766	5466.3073	466.7407	319083.4424	180086.4823	927.3900	+0.050000
F-6	725+89.8866	0.3766	5466.8740	467.2900	319071.8521	180094.6383	941.5626	+0.050000
F-7	726+04.0532	0.3766	5467.4406	467.8046	319060.3922	180102.9767	955.7352	+0.050000
F-8	726+18.2198	0.3766	5467.9978	468.2751	319049.0657	180111.4955	969.9077	+0.050000
F-9	726+32.3864	0.3766	5468.5117	468.6677	319037.8756	180120.1925	984.0803	+0.050000
BK BRG 8	726+46.5530	0.3766	5468.9796	468.9796	319026.8244	180129.0654	998.2528	+0.050000
CL PIER 8	726+49.5530	0.3766	5469.0727		319024.5023	180130.9669	1001.2541	+0.050000
AH BRG 8	726+52.5530	0.3766	5469.1638	469.1638	319022.1866	180132.8760	1004.2554	+0.050000

NOTES:

See Sheet B60 for notes.

Revision Dates (Preliminary Stage Only) MM/YY

Design		Detail		Quantities	
Designed By: SA	DATE: 11/09	Detailed By: ERS	DATE: 11/09	Quantities By	DATE
Checked By		Checked By: KCS	DATE: 12/09	Checked By	

Print Date: 12/31/2009
File Name: 14679_pBD-N705.dgn
Horiz. Scale: 1:1 Vert. Scale: As Noted
Staff Bridge Branch - Unit 0224 Unit Leader: MH

PBS&J
4601 DTC Boulevard
Suite 700
Denver, CO 80237

Sheet Revisions		
Date:	Comments	Init.

Colorado Department of Transportation
DEPARTMENT OF TRANSPORTATION
8833 South Wadsworth Court
Littleton, CO 80128
Phone: 303-972-9112 FAX: 303-972-9114
Region 6 RLB

As Constructed
No Revisions:
Revised:
Void:

SB SANTA FE TO EB C470 RAMP BRIDGE DECK ELEVATIONS (9 OF 13)

Designer:	S. Abraham	Structure Numbers	F-16-YE
Detailer:	E. Schawo		
Sheet Subset:	Bridge	Subset Sheets: B68 of 72	

Project No./Code
ES6 0852-103
17679
Sheet Number 257

18026 1:54:39 PM S:\Tranproj\100002375\14679\Consultants\Bridge\Drawings\14679_pBD-N705.dgn

GIRDER B LEFT (CONT.) VARIES WITH SUPER NOMINAL OFFSET = 0.3766 FT -0.2500 NORMAL FROM FINISHED GRADE

BENT LINE	STATION	OFFSET	ELEVATION	ELEV+DL	NORTHING	EASTING	GIRDER LNTH	CRS-SLP
F-1	726+67.9530	0.3766	5469.5987	469.7817	319010.4005	180142.7978	1019.6618	+0.050000
F-2	726+83.3530	0.3766	5469.9792	470.3045	318998.7869	180152.9210	1035.0683	+0.050000
F-3	726+98.7530	0.3766	5470.3051	470.7321	318987.3492	180163.2425	1050.4748	+0.050000
F-4	727+14.1530	0.3766	5470.5765	471.0645	318976.0908	180173.7592	1065.8813	+0.050000
F-5	727+29.5530	0.3766	5470.7933	471.3017	318965.0150	180184.4681	1081.2878	+0.050000
F-6	727+44.9530	0.3766	5470.9557	471.4437	318954.1251	180195.3659	1096.6942	+0.050000
F-7	727+60.3530	0.3766	5471.0635	471.4905	318943.4243	180206.4495	1112.1007	+0.050000
F-8	727+75.7530	0.3766	5471.1168	471.4421	318932.9158	180217.7156	1127.5072	+0.050000
F-9	727+91.1530	0.3766	5471.1155	471.2985	318922.6027	180229.1610	1142.9137	+0.050000
BK BRG 9	728+06.5530	0.3766	5471.0597	471.0597	318912.4880	180240.7820	1158.3202	+0.050000
CL PIER 9	728+09.5530	0.3766	5471.0425		318910.5410	180243.0659	1161.3214	+0.050000
AH BRG 9	728+12.5530	0.3766	5471.0233	471.0233	318908.6017	180245.3564	1164.3227	+0.050000
F-1	728+27.9530	0.3766	5470.8917	471.0777	318898.7677	180257.2160	1179.7292	+0.050000
F-2	728+43.3530	0.3766	5470.7057	471.0363	318889.1394	180269.2429	1195.1356	+0.050000
F-3	728+58.7530	0.3766	5470.4651	470.8991	318879.7193	180281.4337	1210.5421	+0.050000
F-4	728+74.1530	0.3766	5470.1700	470.6660	318870.5103	180293.7848	1225.9486	+0.050000
F-5	728+89.5530	0.3766	5469.8203	470.3370	318861.5153	180306.2925	1241.3551	+0.050000
F-6	729+04.9530	0.3766	5469.4162	469.9122	318852.7368	180318.9532	1256.7616	+0.050000
F-7	729+20.3530	0.3766	5468.9575	469.3915	318844.1775	180331.7630	1272.1680	+0.050000
F-8	729+35.7530	0.3766	5468.4443	468.7749	318835.8398	180344.7182	1287.5745	+0.050000
F-9	729+51.1530	0.3766	5467.8765	468.0625	318827.7262	180357.8149	1302.9810	+0.050000
BK BRG 10	729+66.5530	0.3766	5467.2825	467.2825	318819.8392	180371.0493	1318.3875	+0.050000
CL PIER 10	729+69.5530	0.3766	5467.1668		318818.3293	180373.6431	1321.3887	+0.050000
AH BRG 10	729+72.5530	0.3766	5467.0511	467.0511	318816.8281	180376.2420	1324.3900	+0.050000
F-1	729+87.9530	0.3766	5466.4570	466.6490	318809.2598	180389.6612	1339.7965	+0.050000
F-2	730+03.3530	0.3766	5465.8630	466.2043	318801.9235	180403.2086	1355.2030	+0.050000
F-3	730+18.7530	0.3766	5465.2690	465.7170	318794.8214	180416.8801	1370.6094	+0.050000
F-4	730+34.1530	0.3766	5464.6749	465.1869	318787.9555	180430.6719	1386.0159	+0.050000
F-5	730+49.5530	0.3766	5464.0809	464.6142	318781.3279	180444.5799	1401.4224	+0.050000
F-6	730+64.9530	0.3766	5463.4869	463.9989	318774.9407	180458.5997	1416.8289	+0.050000
F-7	730+80.3530	0.3766	5462.8928	463.3408	318768.7955	180472.7273	1432.2354	+0.050000
F-8	730+95.7530	0.3766	5462.2988	462.6401	318762.8944	180486.9586	1447.6418	+0.050000
F-9	731+11.1530	0.3766	5461.7049	461.8969	318757.2390	180501.2895	1463.0483	+0.050000
BK BRG 11	731+26.5530	0.3766	5461.1281	461.1281	318751.8311	180515.7154	1478.4548	+0.050000
CL PIER 11	731+29.5530	0.3766	5461.0192		318750.8065	180518.5363	1481.4561	+0.050000
AH BRG 11	731+32.5530	0.3766	5460.9115	460.9115	318749.7914	180521.3607	1484.4573	+0.050000
F-1	731+45.7530	0.3766	5460.4510	460.5530	318745.4376	180533.8278	1497.6629	+0.050000
F-2	731+58.9530	0.3766	5460.0126	460.1939	318741.2681	180546.3578	1510.8684	+0.050000
F-3	731+72.1530	0.3766	5459.5962	459.8342	318737.2839	180558.9478	1524.0740	+0.050000
F-4	731+85.3530	0.3766	5459.2019	459.4739	318733.4858	180571.5953	1537.2795	+0.050000
F-5	731+98.5530	0.3766	5458.8296	459.1129	318729.8747	180584.2974	1550.4851	+0.050000
F-6	732+11.7530	0.3766	5458.4793	458.7513	318726.4512	180597.0513	1563.6906	+0.050000
F-7	732+24.9530	0.3766	5458.1511	458.3891	318723.2163	180609.8543	1576.8962	+0.050000
F-8	732+38.1530	0.3766	5457.8450	458.0263	318720.1704	180622.7037	1590.1017	+0.050000
F-9	732+51.3530	0.3766	5457.5609	457.6629	318717.3145	180635.5966	1603.3073	+0.050000
BK BRG 12	732+64.5530	0.3766	5457.2988	457.2988	318714.6490	180648.5303	1616.5129	+0.050000
CL PIER 12	732+67.5530	0.3766	5457.2423		318714.0698	180651.4752	1619.5141	+0.050000
AH BRG 12	732+70.5530	0.3766	5457.1870	457.1870	318713.5005	180654.4219	1622.5154	+0.050000
F-1	732+80.4530	0.3766	5457.0124	457.0514	318711.6920	180664.1595	1632.4195	+0.050000
F-2	732+90.3530	0.3766	5456.8503	456.9196	318709.9912	180673.9164	1642.3237	+0.050000
F-3	733+00.2530	0.3766	5456.7005	456.7915	318708.3985	180683.6917	1652.2279	+0.050000
F-4	733+10.1530	0.3766	5456.5632	456.6672	318706.9140	180693.4839	1662.1320	+0.050000
F-5	733+20.0530	0.3766	5456.4382	456.5466	318705.5379	180703.2920	1672.0362	+0.050000
F-6	733+29.9530	0.3766	5456.3257	456.4297	318704.2704	180713.1147	1681.9404	+0.050000
F-7	733+39.8530	0.3766	5456.2256	456.3166	318703.1117	180722.9507	1691.8445	+0.050000
F-8	733+49.7530	0.3766	5456.1378	456.2071	318702.0618	180732.7991	1701.7487	+0.050000
F-9	733+59.6530	0.3766	5456.0624	456.1014	318701.1208	180742.6583	1711.6529	+0.049886
BK BRG 13	733+69.5530	0.3764	5455.9991	455.9991	318700.2893	180752.5275	1721.5570	+0.048943
CL PIER 13	733+72.5530	0.3763	5455.9823		318700.0589	180755.5199	1724.5583	+0.048470
END BRIDGE	733+77.5530	0.3760	5455.9568		318699.6973	180760.5089	1729.5604	+0.047487

GIRDER B RIGHT VARIES WITH SUPER NOMINAL OFFSET = 7.0558 FT -0.2500 NORMAL FROM FINISHED GRADE

BENT LINE	STATION	OFFSET	ELEVATION	ELEV+DL	NORTHING	EASTING	GIRDER LNTH	CRS-SLP
STA BRIDGE	716+48.7200	7.0564	5429.4204		319969.3347	180003.0274	0.0000	+0.030000
CL PIER 1	716+53.7200	7.0565	5429.6375		319964.7492	180000.9371	5.0394	+0.032427
AH BRG 1	716+56.7200	7.0565	5429.7678	429.7678	319961.9923	179999.6953	8.0631	+0.033883
F-1	716+69.4700	7.0565	5430.3207	430.4347	319950.2295	179994.5212	20.9136	+0.039972

GIRDER B RIGHT (CONT.) VARIES WITH SUPER NOMINAL OFFSET = 7.0558 FT -0.2500 NORMAL FROM FINISHED GRADE

BENT LINE	STATION	OFFSET	ELEVATION	ELEV+DL	NORTHING	EASTING	GIRDER LNTH	CRS-SLP
F-2	716+82.2200	7.0562	5430.8647	431.0674	319938.3943	179989.5152	33.7641	+0.044809
F-3	716+94.9700	7.0560	5431.3977	431.6637	319926.4889	179984.6785	46.6146	+0.048068
F-4	717+07.7200	7.0558	5431.9195	432.2235	319914.5158	179980.0117	59.4651	+0.049748
F-5	717+20.4700	7.0558	5432.4313	432.7479	319902.4776	179975.5158	72.3156	+0.050000
F-6	717+33.2200	7.0558	5432.9413	433.2453	319890.3765	179971.1918	85.1662	+0.050000
F-7	717+45.9700	7.0558	5433.4513	433.7173	319878.2150	179967.0407	98.0167	+0.050000
F-8	717+58.7200	7.0558	5433.9613	434.1639	319865.9956	179963.0632	110.8672	+0.050000
F-9	717+71.4700	7.0558	5434.4713	434.5853	319853.7209	179959.2602	123.7177	+0.050000
BK BRG 2	717+84.2200	7.0558	5434.9813	434.9813	319841.3932	179955.6324	136.5682	+0.050000
CL PIER 2	717+87.2200	7.0558	5435.1013		319838.4851	179954.8044	139.5919	+0.050000
AH BRG 2	717+90.2200	7.0558	5435.2213	435.2213	319835.5743	179953.9861	142.6155	+0.050000
F-1	718+00.6200	7.0558	5435.6373	435.6733	319825.4626	179951.2250	153.0975	+0.050000
F-2	718+11.0200	7.0558	5436.0533	436.1173	319815.3194	179948.5816	163.5795	+0.050000
F-3	718+21.4200	7.0558	5436.4693	436.5533	319805.1463	179946.0562	174.0615	+0.050000
F-4	718+31.8200	7.0558	5436.8853	436.9813	319794.9445	179943.6493	184.5435	+0.050000
F-5	718+42.2200	7.0558	5437.3013	437.4013	319784.7153	179941.3609	195.0255	+0.050000
F-6	718+52.6200	7.0558	5437.7173	437.8133	319774.4603	179939.1917	205.5075	+0.050000
F-7	718+63.0200	7.0558	5438.1333	438.2173	319764.1808	179937.1417	215.9894	+0.050000
F-8	718+73.4200	7.0558	5438.5493	438.6133	319753.8782	179935.2112	226.4714	+0.050000
F-9	718+83.8200	7.0558	5438.9653	439.0013	319743.5538	179933.4008	236.9534	+0.050000
BK BRG 3	718+94.2200	7.0558	5439.3813	439.3813	319733.2091	179931.7102	247.4354	+0.050000
CL PIER 3	718+97.2200	7.0558	5439.5013		319730.2214	179931.2451	250.4591	+0.050000
AH BRG 3	719+00.2200	7.0558	5439.6213	439.6213	319727.2323	179930.7898	253.4827	+0.050000
F-1	719+12.8200	7.0558	5440.1253	440.2123	319714.6616	179928.9871	266.1821	+0.050000
F-2	719+25.4200	7.0558	5440.6293	440.7839	319702.0668	179927.3617	278.8814	+0.050000
F-3	719+38.0200	7.0558	5441.1333	441.3363	319689.4505	179925.9137	291.5807	+0.050000
F-4	719+50.6200	7.0558	5441.6373	441.8693	319676.8149	179924.6434	304.2801	+0.050000
F-5	719+63.2200	7.0558	5442.1413	442.3829	319664.1628	179923.5512	316.9794	+0.050000
F-6	719+75.8200	7.0558	5442.6453	442.8773	319651.4964	179922.6371	329.6787	+0.050000
F-7	719+88.4200	7.0558	5443.1493	443.3523	319638.8185	179921.9016	342.3781	+0.050000
F-8	720+01.0200	7.0558	5443.6533	443.8079	319626.1315	179921.3446	355.0774	+0.050000
F-9	720+13.6200	7.0558	5444.1573	444.2443	319613.4380	179920.9661	367.7767	+0.050000
BK BRG 4	720+26.2200	7.0558	5444.6613	444.6613	319600.7402	179920.7665	380.4760	+0.050000
CL PIER 4	720+29.2200	7.0558	5444.7813		319597.7167	179920.7453	383.4997	+0.050000
AH BRG 4	720+32.2200	7.0558	5444.9013	444.9013	319594.6931	179920.7342	386.5234	+0.050000
F-1	720+48.1200	7.0558	5445.5373	445.7503	319578.6684	179920.8448	402.5487	+0.050000
F-2	720+64.0200	7.0558	5446.1733	446.5519	319562.6481	179921.2401	418.5740	+0.050000
F-3	720+79.9200	7.0558	5446.8093	447.3063	319546.6374	179921.9199	434.5994	+0.050000
F-4	720+95.8200	7.0558	5447.4453	448.0133	319530.6412	179922.8839	450.6247	+0.050000
F-5	721+11.7200	7.0558	5448.0813	448.6729	319514.6648	179924.1320	466.6501	+0.050000
F-6	721+27.6200	7.0558	5448.7173	449.2853	319498.7130	179925.6637	482.6754	+0.050000
F-7	721+43.5200	7.0558	5449.3533	449.8503	319482.7910	179927.4786	498.7008	+0.050000
F-8	721+59.4200	7.0558	5449.9893	450.3679	319466.9037	179929.5761	514.7261	+0.050000
F-9	721+75.3200	7.0558	5450.6253	450.8383	319451.0562	179931.9553	530.7515	+0.050000
BK BRG 5	721+91.2200	7.0558	5451.2613	451.2613	319435.2535	179934.6158	546.7768	+0.050000
CL PIER 5	721+94.2200	7.0558	5451.3813		319432.2772	179935.1493	549.8005	+0.050000
AH BRG 5	721+97.2200	7.0558	5451.5013	451.5013	319429.3028	179935.6926	552.8241	+0.050000
F-1	722+12.6200	7.0558	5452.1173	452.3003	319414.0637	179938.6389	568.3455	+0.050000
F-2	722+28.0200	7.0558	5452.7333	453.0586	319398.8777	179941.8469	583.8670	+0.050000
F-3	722+43.4200	7.0558	5453.3493	453.7763	319383.7491	179945.3157	599.3884	+0.050000
F-4	722+58.8200	7.0558	5453.9653	454.4533	319368.6823	179949.0443	614.9098	+0.050000
F-5	722+74.2200	7.0558	5454.5813	455.0896	319353.6820	179953.0316	630.4312	+0.050000
F-6	722+89.6200	7.0558	5455.1973	455.6853	319338.7526	179957.2765	645.9526	+0.050000
F-7	723+05.0200	7.0558	5455.8133	456.2403	319323.8983	179961.7775	661.4740	+0.050000
F-8	723+20.4200	7.0558	5456.4293	456.7546	319309.1237	179966.5335	676.9954	+0.050000
F-9	723+35.8200	7.0558	5457.0453	457.2283	319294.4331	179971.5430	692.5168	+0.050000
BK BRG 6	723+51.2200	7.0558	5457.6613	457.6613	319279.8309	179976.8045	708.0382	+0.050000
CL PIER 6	723+54.2200	7.0558	5457.7813		319276.9969	179977.8586	711.0619	+0.050000
AH BRG 6	723+57.2200	7.0558	5457.9013	457.9013	319274.1666	179978.9222	714.0855	+0.050000
F-1	723+71.3867	7.0558	5458.4679	458.6239	319260.8497	179984.0730	728.3639	+0.050000
F-2	723+85.5534	7.0558	5459.0346	459.3119	319247.6161	179989.4338	742.6423	+0.050000

NOTES:

See Sheet B60 for notes.

Quantities			
Detail	INITIAL	DATE	
Detailed By	ERS	11/09	Quantities By
Checked By	KCS	12/09	Checked By

Design	INITIAL	DATE	Revision Dates (Preliminary Stage Only)	MM/YY
Designed By	SA	11/09		
Checked By				

18026 1:54:40 PM S:\Tranproj\100002375\14679\Consultants\Bridge\Drawings\14679_pBD-N705.dgn

Print Date: 12/31/2009
File Name: 14679_pBD-N705.dgn
Horiz. Scale: 1:1 Vert. Scale: As Noted
Staff Bridge Branch - Unit 0224 Unit Leader: MH

PBSJ 4601 DTC Boulevard Suite 700 Denver, CO 80237

Sheet Revisions		
Date:	Comments	Init.

Colorado Department of Transportation
8833 South Wadsworth Court
Littleton, CO 80128
Phone: 303-972-9112 FAX: 303-972-9114
Region 6 RLB

As Constructed
No Revisions:
Revised:
Void:

SB SANTA FE TO EB C470 RAMP
BRIDGE DECK ELEVATIONS
(10 OF 13)

Designer: S. Abraham
Detailer: E. Schawo
Sheet Subset: Bridge
Structure Numbers F-16-YE
Subset Sheets: B69 of 72

Project No./Code
ES6 0852-103
17679
Sheet Number 258

GIRDER B RIGHT (CONT.) VARIES WITH SUPER NOMINAL OFFSET = 7.0558 FT -0.2500 NORMAL FROM FINISHED GRADE

BENT LINE	STATION	OFFSET	ELEVATION	ELEV+DL	NORTHING	EASTING	GIRDER LNTH	CRS-SLP
F-3	723+99.7201	7.0558	5459.6013	459.9653	319234.4690	179995.0035	756.9207	+0.050000
F-4	724+13.8868	7.0558	5460.1679	460.5839	319221.4117	180000.7805	771.1990	+0.050000
F-5	724+28.0535	7.0558	5460.7346	461.1680	319208.4475	180006.7636	785.4774	+0.050000
F-6	724+42.2202	7.0558	5461.3013	461.7173	319195.5794	180012.9510	799.7558	+0.050000
F-7	724+56.3869	7.0558	5461.8680	462.2320	319182.8111	180019.3414	814.0342	+0.050000
F-8	724+70.5536	7.0558	5462.4346	462.7120	319170.1455	180025.9330	828.3126	+0.050000
F-9	724+84.7203	7.0558	5463.0013	463.1573	319157.5858	180032.7243	842.5910	+0.050000
BK BRG 7	724+98.8870	7.0558	5463.5680	463.5680	319145.1351	180039.7135	856.8694	+0.050000
CL PIER 7	725+01.8870	7.0558	5463.6880		319142.5128	180041.2189	859.8930	+0.050000
AH BRG 7	725+04.8870	7.0558	5463.8080	463.8080	319139.8956	180042.7329	862.9167	+0.050000
F-1	725+19.0536	7.0558	5464.3746	464.5306	319127.6057	180050.0009	877.1949	+0.050000
F-2	725+33.2202	7.0558	5464.9413	465.2186	319115.4322	180057.4624	891.4732	+0.050000
F-3	725+47.3868	7.0558	5465.5079	465.8719	319103.3785	180065.1157	905.7515	+0.050000
F-4	725+61.5534	7.0558	5466.0746	466.4906	319091.4475	180072.9588	920.0298	+0.050000
F-5	725+75.7200	7.0558	5466.6413	467.0746	319079.6420	180080.9898	934.3081	+0.050000
F-6	725+89.8866	7.0558	5467.2079	467.6239	319067.9651	180089.2066	948.5864	+0.050000
F-7	726+04.0532	7.0558	5467.7746	468.1386	319056.4198	180097.6073	962.8646	+0.050000
F-8	726+18.2198	7.0558	5468.3318	468.6091	319045.0089	180106.1895	977.1429	+0.050000
F-9	726+32.3864	7.0558	5468.8457	469.0017	319033.7353	180114.9514	991.4212	+0.050000
BK BRG 8	726+46.5530	7.0558	5469.3135	469.3135	319022.6017	180123.8905	1005.6995	+0.050000
CL PIER 8	726+49.5530	7.0558	5469.4067		319020.2623	180125.8062	1008.7231	+0.050000
AH BRG 8	726+52.5530	7.0558	5469.4977	469.4977	319017.9292	180127.7295	1011.7468	+0.050000
F-1	726+67.9530	7.0558	5469.9327	470.1157	319006.0552	180137.7253	1027.2682	+0.050000
F-2	726+83.3530	7.0558	5470.3131	470.6385	318994.3550	180147.9240	1042.7896	+0.050000
F-3	726+98.7530	7.0558	5470.6390	471.0660	318982.8320	180158.3225	1058.3110	+0.050000
F-4	727+14.1530	7.0558	5470.9104	471.3984	318971.4896	180168.9177	1073.8324	+0.050000
F-5	727+29.5530	7.0558	5471.1273	471.6356	318960.3312	180179.7065	1089.3538	+0.050000
F-6	727+44.9530	7.0558	5471.2896	471.7776	318949.3600	180190.6857	1104.8752	+0.050000
F-7	727+60.3530	7.0558	5471.3974	471.8244	318938.5795	180201.8519	1120.3966	+0.050000
F-8	727+75.7530	7.0558	5471.4507	471.7760	318927.9925	180213.2021	1135.9180	+0.050000
F-9	727+91.1530	7.0558	5471.4495	471.6325	318917.6025	180224.7327	1151.4395	+0.050000
BK BRG 9	728+06.5530	7.0558	5471.3937	471.3937	318907.4124	180236.4404	1166.9609	+0.050000
CL PIER 9	728+09.5530	7.0558	5471.3765		318905.4508	180238.7415	1169.9845	+0.050000
AH BRG 9	728+12.5530	7.0558	5471.3572	471.3572	318903.4970	180241.0491	1173.0082	+0.050000
F-1	728+27.9530	7.0558	5471.2257	471.4117	318893.5897	180252.9970	1188.5296	+0.050000
F-2	728+43.3530	7.0558	5471.0396	471.3703	318883.8895	180265.1137	1204.0510	+0.050000
F-3	728+58.7530	7.0558	5470.7990	471.2330	318874.3992	180277.3954	1219.5724	+0.050000
F-4	728+74.1530	7.0558	5470.5039	470.9999	318865.1216	180289.8387	1235.0938	+0.050000
F-5	728+89.5530	7.0558	5470.1543	470.6710	318556.0594	180302.4397	1250.6152	+0.050000
F-6	729+04.9530	7.0558	5469.7501	470.2461	318847.2154	180315.1948	1266.1366	+0.050000
F-7	729+20.3530	7.0558	5469.2914	469.7254	318838.5923	180328.1001	1281.6580	+0.050000
F-8	729+35.7530	7.0558	5468.7782	469.1089	318830.1924	180341.1520	1297.1794	+0.050000
F-9	729+51.1530	7.0558	5468.2105	468.3965	318822.0183	180354.3463	1312.7008	+0.050000
BK BRG 10	729+66.5530	7.0558	5467.6165	467.6165	318814.0725	180367.6795	1328.2222	+0.050000
CL PIER 10	729+69.5530	7.0558	5467.5007		318812.5513	180370.2927	1331.2459	+0.050000
AH BRG 10	729+72.5530	7.0558	5467.3850	467.3850	318811.0389	180372.9109	1334.2695	+0.050000
F-1	729+87.9530	7.0558	5466.7910	466.9830	318803.4142	180386.4302	1349.7909	+0.050000
F-2	730+03.3530	7.0558	5466.1970	466.5383	318796.0231	180400.0787	1365.3124	+0.050000
F-3	730+18.7530	7.0558	5465.6029	466.0509	318788.8680	180413.8522	1380.8338	+0.050000
F-4	730+34.1530	7.0558	5465.0089	465.5209	318781.9509	180427.7469	1396.3552	+0.050000
F-5	730+49.5530	7.0558	5464.4149	464.9482	318775.2739	180441.7585	1411.8766	+0.050000
F-6	730+64.9530	7.0558	5463.8208	464.3328	318768.8390	180455.8830	1427.3980	+0.050000
F-7	730+80.3530	7.0558	5463.2268	463.6748	318762.6480	180470.1160	1442.9194	+0.050000
F-8	730+95.7530	7.0558	5462.6328	462.9741	318756.7029	180484.4536	1458.4408	+0.050000
F-9	731+11.1530	7.0558	5462.0388	462.2308	318751.0053	180498.8912	1473.9622	+0.050000
BK BRG 11	731+26.5530	7.0558	5461.4620	461.4620	318745.5570	180513.4247	1489.4836	+0.050000
CL PIER 11	731+29.5530	7.0558	5461.3532		318744.5248	180516.2667	1492.5073	+0.050000
AH BRG 11	731+32.5530	7.0558	5461.2454	461.2454	318743.5021	180519.1122	1495.5309	+0.050000
F-1	731+45.7530	7.0558	5460.7850	460.8870	318739.1158	180531.6723	1508.8350	+0.050000
F-2	731+58.9530	7.0558	5460.3465	460.5279	318734.9153	180544.2957	1522.1390	+0.050000
F-3	731+72.1530	7.0558	5459.9302	460.1682	318730.9013	180556.9796	1535.4431	+0.050000
F-4	731+85.3530	7.0558	5459.5358	459.8078	318727.0749	180569.7214	1548.7472	+0.050000
F-5	731+98.5530	7.0558	5459.1635	459.4469	318723.4368	180582.5183	1562.0512	+0.050000
F-6	732+11.7530	7.0558	5458.8133	459.0853	318719.9878	180595.3674	1575.3553	+0.050000
F-7	732+24.9530	7.0558	5458.4851	458.7231	318716.7288	180608.2660	1588.6594	+0.050000
F-8	732+38.1530	7.0558	5458.1789	458.3603	318713.6602	180621.2112	1601.9634	+0.050000
F-9	732+51.3530	7.0558	5457.8948	457.9968	318710.7829	180634.2003	1615.2675	+0.050000
BK BRG 12	732+64.5530	7.0558	5457.6328	457.6328	318708.0975	180647.2303	1628.5715	+0.050000
CL PIER 12	732+67.5530	7.0558	5457.5763		318707.5141	180650.1971	1631.5952	+0.050000

GIRDER B RIGHT (CONT.) VARIES WITH SUPER NOMINAL OFFSET = 7.0558 FT -0.2500 NORMAL FROM FINISHED GRADE

BENT LINE	STATION	OFFSET	ELEVATION	ELEV+DL	NORTHING	EASTING	GIRDER LNTH	CRS-SLP
AH BRG 12	732+70.5530	7.0558	5457.5210	457.5210	318706.9405	180653.1659	1634.6188	+0.050000
F-1	732+80.4530	7.0558	5457.3464	457.3854	318705.1185	180662.9762	1644.5969	+0.050000
F-2	732+90.3530	7.0558	5457.1843	457.2536	318703.4050	180672.8060	1654.5749	+0.050000
F-3	733+00.2530	7.0558	5457.0345	457.1255	318701.8004	180682.6540	1664.5530	+0.050000
F-4	733+10.1530	7.0558	5456.8972	457.0012	318700.3048	180692.5194	1674.5310	+0.050000
F-5	733+20.0530	7.0558	5456.7722	456.8805	318698.9185	180702.4005	1684.5091	+0.050000
F-6	733+29.9530	7.0558	5456.6597	456.7637	318697.6416	180712.2965	1694.4871	+0.050000
F-7	733+39.8530	7.0558	5456.5595	456.6505	318696.4741	180722.2060	1704.4652	+0.050000
F-8	733+49.7530	7.0558	5456.4718	456.5411	318695.4164	180732.1278	1714.4432	+0.050000
F-9	733+59.6530	7.0558	5456.3956	456.4346	318694.4685	180742.0606	1724.4213	+0.049886
BK BRG 13	733+69.5530	7.0559	5456.3260	456.3260	318693.6303	180752.0034	1734.3993	+0.048943
CL PIER 13	733+72.5530	7.0559	5456.3061		318693.3981	180755.0181	1737.4230	+0.048470
END BRIDGE	733+77.5530	7.0560	5456.2740		318693.0335	180760.0443	1742.4624	+0.047487

RIGHT FLOWLINE PARALLEL TO HORIZONTAL CONTROL 0.250000 FEET BELOW FINISHED GRADE

BENT LINE	STATION	OFFSET	ELEVATION	ELEV+DL	NORTHING	EASTING	GIRDER LNTH	CRS-SLP
STA A SLAB	716+18.7200	8.0000	5428.1323		319996.9914	180014.6890	-30.0000	+0.015437
STA BRIDGE	716+48.7200	8.0000	5429.4488		319969.7284	180002.1699	0.0000	+0.030000
CL PIER 1	716+53.7200	8.0000	5429.6682		319965.1381	180000.0775	5.0447	+0.032427
AH BRG 1	716+56.7200	8.0000	5429.7999		319962.3783	179998.8344	8.0715	+0.033883
F-1	716+69.4700	8.0000	5430.3586		319950.6033	179993.6549	20.9355	+0.039972
F-2	716+82.2200	8.0000	5430.9073		319938.7557	179988.6434	33.7994	+0.044809
F-3	716+94.9700	8.0000	5431.4433		319926.8380	179983.8013	46.6634	+0.048068
F-4	717+07.7200	8.0000	5431.9668		319914.8525	179979.1295	59.5274	+0.049748
F-5	717+20.4700	8.0000	5432.4788		319902.8016	179974.6290	72.3913	+0.050000
F-6	717+33.2200	8.0000	5432.9888		319890.6879	179970.3004	85.2553	+0.050000
F-7	717+45.9700	8.0000	5433.4988		319878.5136	179966.1450	98.1193	+0.050000
F-8	717+58.7200	8.0000	5434.0088		319866.2815	179962.1633	110.9832	+0.050000
F-9	717+71.4700	8.0000	5434.5188		319853.9939	179958.3563	123.8472	+0.050000
BK BRG 2	717+84.2200	8.0000	5435.0288		319841.6533	179954.7247	136.7112	+0.050000
CL PIER 2	717+87.2200	8.0000	5435.1488		319838.7422	179953.8959	139.7380	+0.050000
AH BRG 2	717+90.2200	8.0000	5435.2688		319835.8283	179953.0767	142.7648	+0.050000
F-1	718+00.6200	8.0000	5435.6848		319825.7060	179950.3128	153.2578	+0.050000
F-2	718+11.0200	8.0000	5436.1008		319815.5522	179947.6666	163.7507	+0.050000
F-3	718+21.4200	8.0000	5436.5168		319805.3684	179945.1385	174.2437	+0.050000
F-4	718+31.8200	8.0000	5436.9328		319795.1559	179942.7289	184.7366	+0.050000
F-5	718+42.2200	8.0000	5437.3488		319784.9161	179940.4383	195.2296	+0.050000
F-6	718+52.6200	8.0000	5437.7648		319774.6504	179938.2667	205.7226	+0.050000
F-7	718+63.0200	8.0000	5438.1808		319764.3601	179936.2146	216.2155	+0.050000
F-8	718+73.4200	8.0000	5438.5968		319754.0466	179934.2822	226.7085	+0.050000
F-9	718+83.8200	8.0000	5439.0128		319743.7114	179932.4698	237.2014	+0.050000
BK BRG 3	718+94.2200	8.0000	5439.4288		319733.3560	179930.7776	247.6944	+0.050000
CL PIER 3	718+97.2200	8.0000	5439.5488		319730.3652	179930.3118	250.7212	+0.050000
AH BRG 3	719+00.2200	8.0000	5439.6688		319727.3729	179929.8560	253.7480	+0.050000
F-1	719+12.8200	8.0000	5440.1728		319714.7890	179928.0515	266.4607	+0.050000
F-2	719+25.4200	8.0000	5440.6768		319702.1811	179926.4244	279.1733	+0.050000
F-3	719+38.0200	8.0000	5441.1808		319689.5515	179924.9749	291.8859	+0.050000
F-4	719+50.6200	8.0000	5441.6848		319676.9027	179923.7033	304.5985	+0.050000
F-5	719+63.2200	8.0000	5442.1888		319664.2373	179922.6100	317.3112	+0.050000
F-6	719+75.8200	8.0000	5442.6928		319651.5578	179921.6950	330.0238	+0.050000
F-7	719+88.4200	8.0000	5443.1968		319638.8666	179920.9586	342.7364	+0.050000
F-8	720+01.0200	8.0000	5443.7008		319626.1662	179920.4010	355.4490	+0.050000
F-9	720+13.6200	8.0000	5444.2048		319613.4595	179920.0221	368.1617	+0.050000
BK BRG 4	720+26.2200	8.0000	5444.7088		319600.7485	179919.8223	380.8743	+0.050000
CL PIER 4	720+29.2200	8.0000	5444.8288		319597.7217	179919.8010	383.9011	+0.050000
AH BRG 4	720+32.2200	8.0000	5444.9488		319594.6949	179919.7899	386.9279	+0.050000
F-1	720+48.1200	8.0000	5445.5848		319578.6534	179919.9007	402.9700	+0.050000
F-2	720+64.0200	8.0000	5446.2208		319562.6164	179920.2964	419.0122	+0.050000
F-3	720+79.9200	8.0000	5446.8568		319546.5889	179920.9768	435.0543	+0.050000
F-4	720+95.8200	8.0000	5447.4928		319530.5760	179921.9420	451.0964	+0.050000
F-5	721+11.7200	8.0000	5448.1288		319514.5829	179923.1913	467.1385	+0.050000
F-6	721+27.6200	8.0000	5448.7648		319498.6144	179924.7248	483.1807	+0.050000
F-7	721+43.5200	8.0000	5449.4008		319482.6757	179926.5414	499.2228	+0.050000

NOTES:

See Sheet B60 for notes.

Quantities			
Detail	INITIAL	DATE	
Detailed By	ERS	11/09	Quantities By
Checked By	KCS	12/09	Checked By

Design	INITIAL	DATE
Designed By	SA	11/09
Checked By		

Revision Dates	MM/YY	(Preliminary Stage Only)

18026 1:54:40 PM S:\Tranproj\100002375\14679\Consultants\Bridge\Drawings\14679_pBD-N705.dgn

Print Date: 12/31/2009
File Name: 14679_pBD-N705.dgn
Horiz. Scale: 1:1 Vert. Scale: As Noted
Staff Bridge Branch - Unit 0224 Unit Leader: MH

PBSJ 4601 DTC Boulevard Suite 700 Denver, CO 80237

Sheet Revisions		
Date:	Comments	Init.

Colorado Department of Transportation
8833 South Wadsworth Court
Littleton, CO 80128
Phone: 303-972-9112 FAX: 303-972-9114
Region 6 RLB

As Constructed
No Revisions:
Revised:
Void:

SB SANTA FE TO EB C470 RAMP
BRIDGE DECK ELEVATIONS
(11 OF 13)

Designer: S. Abraham
Detailer: E. Schawo
Sheet Subset: Bridge
Structure Numbers: F-16-YE
Subset Sheets: B70 of 72

Project No./Code
ES6 0852-103
17679
Sheet Number 259

RIGHT FLOWLINE (CONT.) PARALLEL TO HORIZONTAL CONTROL 0.250000 FEET BELOW FINISHED GRADE

BENT LINE	STATION	OFFSET	ELEVATION	ELEV+DL	NORTHING	EASTING	GIRDER LNTH	CRS-SLP
F-8	721+59.4200	8.0000	5450.0368		319466.7718	179928.6411	515.2649	+0.050000
F-9	721+75.3200	8.0000	5450.6728		319450.9077	179931.0229	531.3070	+0.050000
BK BRG 5	721+91.2200	8.0000	5451.3088		319435.0884	179933.6861	547.3492	+0.050000
CL PIER 5	721+94.2200	8.0000	5451.4288		319432.1090	179934.2201	550.3760	+0.050000
AH BRG 5	721+97.2200	8.0000	5451.5488		319429.1315	179934.7641	553.4028	+0.050000
F-1	722+12.6200	8.0000	5452.1648		319413.8765	179937.7135	568.9404	+0.050000
F-2	722+28.0200	8.0000	5452.7808		319398.6746	179940.9248	584.4781	+0.050000
F-3	722+43.4200	8.0000	5453.3968		319383.5301	179944.3973	600.0157	+0.050000
F-4	722+58.8200	8.0000	5454.0128		319368.4477	179948.1298	615.5534	+0.050000
F-5	722+74.2200	8.0000	5454.6288		319353.4317	179952.1213	631.0911	+0.050000
F-6	722+89.6200	8.0000	5455.2448		319338.4866	179956.3705	646.6287	+0.050000
F-7	723+05.0200	8.0000	5455.8608		319323.6167	179960.8762	662.1664	+0.050000
F-8	723+20.4200	8.0000	5456.4768		319308.8267	179965.6372	677.7040	+0.050000
F-9	723+35.8200	8.0000	5457.0928		319294.1207	179970.6519	693.2417	+0.050000
BK BRG 6	723+51.2200	8.0000	5457.7088		319279.5031	179975.9189	708.7793	+0.050000
CL PIER 6	723+54.2200	8.0000	5457.8288		319276.6663	179976.9741	711.8061	+0.050000
AH BRG 6	723+57.2200	8.0000	5457.9488		319273.8329	179978.0389	714.8329	+0.050000
F-1	723+71.3867	8.0000	5458.5155		319260.5022	179983.1950	729.1263	+0.050000
F-2	723+85.5534	8.0000	5459.0821		319247.2547	179988.5615	743.4196	+0.050000
F-3	723+99.7201	8.0000	5459.6488		319234.0938	179994.1370	757.7129	+0.050000
F-4	724+13.8868	8.0000	5460.2155		319221.0228	179999.9202	772.0063	+0.050000
F-5	724+28.0535	8.0000	5460.7821		319208.0450	180005.9094	786.2996	+0.050000
F-6	724+42.2202	8.0000	5461.3488		319195.1636	180012.1033	800.5929	+0.050000
F-7	724+56.3869	8.0000	5461.9155		319182.3818	180018.5004	814.8863	+0.050000
F-8	724+70.5536	8.0000	5462.4821		319169.7030	180025.0990	829.1796	+0.050000
F-9	724+84.7203	8.0000	5463.0488		319157.1301	180031.8973	843.4729	+0.050000
BK BRG 7	724+98.8870	8.0000	5463.6155		319144.6665	180038.8939	857.7662	+0.050000
CL PIER 7	725+01.8870	8.0000	5463.7355		319142.0414	180040.4007	860.7931	+0.050000
AH BRG 7	725+04.8870	8.0000	5463.8555		319139.4213	180041.9164	863.8199	+0.050000
F-1	725+19.0536	8.0000	5464.4221		319127.1186	180049.1919	878.1131	+0.050000
F-2	725+33.2202	8.0000	5464.9888		319114.9325	180056.6613	892.4063	+0.050000
F-3	725+47.3868	8.0000	5465.5555		319102.8661	180064.3226	906.6996	+0.050000
F-4	725+61.5534	8.0000	5466.1221		319090.9226	180072.1739	920.9928	+0.050000
F-5	725+75.7200	8.0000	5466.6888		319079.1048	180080.2133	935.2860	+0.050000
F-6	725+89.8866	8.0000	5467.2555		319067.4157	180088.4387	949.5792	+0.050000
F-7	726+04.0532	8.0000	5467.8221		319055.8582	180096.8482	963.8725	+0.050000
F-8	726+18.2198	8.0000	5468.3793		319044.4354	180105.4395	978.1657	+0.050000
F-9	726+32.3864	8.0000	5468.8932		319033.1500	180114.2104	992.4589	+0.050000
BK BRG 8	726+46.5530	8.0000	5469.3610		319022.0048	180123.1590	1006.7522	+0.050000
CL PIER 8	726+49.5530	8.0000	5469.4542		319019.6628	180125.0765	1009.7790	+0.050000
AH BRG 8	726+52.5530	8.0000	5469.5453		319017.3274	180127.0019	1012.8058	+0.050000
F-1	726+67.9530	8.0000	5469.9802		319005.4410	180137.0083	1028.3434	+0.050000
F-2	726+83.3530	8.0000	5470.3607		318993.7284	180147.2176	1043.8811	+0.050000
F-3	726+98.7530	8.0000	5470.6866		318982.1934	180157.6270	1059.4188	+0.050000
F-4	727+14.1530	8.0000	5470.9580		318970.8391	180168.2332	1074.9564	+0.050000
F-5	727+29.5530	8.0000	5471.1748		318959.6690	180179.0333	1090.4941	+0.050000
F-6	727+44.9530	8.0000	5471.3371		318948.6864	180190.0240	1106.0317	+0.050000
F-7	727+60.3530	8.0000	5471.4450		318937.8945	180201.2020	1121.5694	+0.050000
F-8	727+75.7530	8.0000	5471.4982		318927.2965	180212.5640	1137.1070	+0.050000
F-9	727+91.1530	8.0000	5471.4970		318916.8956	180224.1066	1152.6447	+0.050000
BK BRG 9	728+06.5530	8.0000	5471.4412		318906.6949	180235.8267	1168.1823	+0.050000
CL PIER 9	728+09.5530	8.0000	5471.4240		318904.7312	180238.1301	1171.2091	+0.050000
AH BRG 9	728+12.5530	8.0000	5471.4047		318902.7754	180240.4401	1174.2360	+0.050000
F-1	728+27.9530	8.0000	5471.2732		318892.8577	180252.4006	1189.7736	+0.050000
F-2	728+43.3530	8.0000	5471.0871		318883.1473	180264.5299	1205.3113	+0.050000
F-3	728+58.7530	8.0000	5470.8466		318873.6471	180276.8246	1220.8489	+0.050000
F-4	728+74.1530	8.0000	5470.5514		318864.3598	180289.2808	1236.3866	+0.050000
F-5	728+89.5530	8.0000	5470.2018		318855.2882	180301.8950	1251.9242	+0.050000
F-6	729+04.9530	8.0000	5469.7977		318846.4349	180314.6635	1267.4619	+0.050000
F-7	729+20.3530	8.0000	5469.3390		318837.8027	180327.5824	1282.9995	+0.050000
F-8	729+35.7530	8.0000	5468.8258		318829.3940	180340.6478	1298.5372	+0.050000
F-9	729+51.1530	8.0000	5468.2580		318821.2113	180353.8561	1314.0748	+0.050000
BK BRG 10	729+66.5530	8.0000	5467.6640		318813.2572	180367.2031	1329.6125	+0.050000
CL PIER 10	729+69.5530	8.0000	5467.5483		318811.7345	180369.8190	1332.6393	+0.050000
AH BRG 10	729+72.5530	8.0000	5467.4326		318810.2206	180372.4400	1335.6661	+0.050000
F-1	729+87.9530	8.0000	5466.8385		318802.5878	180385.9735	1351.2038	+0.050000
F-2	730+03.3530	8.0000	5466.2445		318795.1890	180399.6362	1366.7414	+0.050000
F-3	730+18.7530	8.0000	5465.6505		318788.0263	180413.4241	1382.2791	+0.050000
F-4	730+34.1530	8.0000	5465.0564		318781.1021	180427.3334	1397.8167	+0.050000

RIGHT FLOWLINE (CONT.) PARALLEL TO HORIZONTAL CONTROL 0.250000 FEET BELOW FINISHED GRADE

BENT LINE	STATION	OFFSET	ELEVATION	ELEV+DL	NORTHING	EASTING	GIRDER LNTH	CRS-SLP
F-5	730+49.5530	8.0000	5464.4624		318774.4180	180441.3597	1413.3544	+0.050000
F-6	730+64.9530	8.0000	5463.8684		318767.9764	180455.4989	1428.8920	+0.050000
F-7	730+80.3530	8.0000	5463.2743		318761.7790	180469.7469	1444.4297	+0.050000
F-8	730+95.7530	8.0000	5462.6803		318755.8276	180484.0994	1459.9673	+0.050000
F-9	731+11.1530	8.0000	5462.0863		318750.1240	180498.5521	1475.5050	+0.050000
BK BRG 11	731+26.5530	8.0000	5461.5096		318744.6700	180513.1009	1491.0427	+0.050000
CL PIER 11	731+29.5530	8.0000	5461.4007		318743.6367	180515.9458	1494.0695	+0.050000
AH BRG 11	731+32.5530	8.0000	5461.2930		318742.6130	180518.7943	1497.0963	+0.050000
F-1	731+45.7530	8.0000	5460.8325		318738.2221	180531.3675	1510.4143	+0.050000
F-2	731+58.9530	8.0000	5460.3941		318734.0172	180544.0042	1523.7323	+0.050000
F-3	731+72.1530	8.0000	5459.9777		318729.9990	180556.7014	1537.0503	+0.050000
F-4	731+85.3530	8.0000	5459.5833		318726.1686	180569.4565	1550.3682	+0.050000
F-5	731+98.5530	8.0000	5459.2110		318722.5267	180582.2668	1563.6862	+0.050000
F-6	732+11.7530	8.0000	5458.8608		318719.0741	180595.1293	1577.0042	+0.050000
F-7	732+24.9530	8.0000	5458.5326		318715.8116	180608.0414	1590.3222	+0.050000
F-8	732+38.1530	8.0000	5458.2265		318712.7399	180621.0002	1603.6402	+0.050000
F-9	732+51.3530	8.0000	5457.9424		318709.8596	180634.0029	1616.9582	+0.050000
BK BRG 12	732+64.5530	8.0000	5457.6803		318707.1714	180647.0466	1630.2762	+0.050000
CL PIER 12	732+67.5530	8.0000	5457.6238		318706.5873	180650.0165	1633.3030	+0.050000
AH BRG 12	732+70.5530	8.0000	5457.5685		318706.0131	180652.9883	1636.3298	+0.050000
F-1	732+80.4530	8.0000	5457.3939		318704.1892	180662.8089	1646.3183	+0.050000
F-2	732+90.3530	8.0000	5457.2318		318702.4739	180672.6489	1656.3068	+0.050000
F-3	733+00.2530	8.0000	5457.0820		318700.8677	180682.5074	1666.2953	+0.050000
F-4	733+10.1530	8.0000	5456.9447		318699.3706	180692.3830	1676.2838	+0.050000
F-5	733+20.0530	8.0000	5456.8197		318697.9827	180702.2745	1686.2723	+0.050000
F-6	733+29.9530	8.0000	5456.7072		318696.7045	180712.1809	1696.2608	+0.050000
F-7	733+39.8530	8.0000	5456.6070		318695.5359	180722.1007	1706.2492	+0.050000
F-8	733+49.7530	8.0000	5456.5193		318694.4770	180732.0328	1716.2377	+0.050000
F-9	733+59.6530	8.0000	5456.4430		318693.5280	180741.9761	1726.2262	+0.049886
BK BRG 13	733+69.5530	8.0000	5456.3726		318692.6892	180751.9293	1736.2147	+0.048943
CL PIER 13	733+72.5530	8.0000	5456.3521		318692.4567	180754.9472	1739.2415	+0.048470
END BRIDGE	733+77.5530	8.0000	5456.3191		318692.0918	180759.9786	1744.2862	+0.047487
END A SLAB	734+07.5530	8.0000	5456.1468		318690.4927	180790.2031	1774.5544	+0.036528

RIGHT OUT OF DECK PARALLEL TO HORIZONTAL CONTROL 0.250000 FEET BELOW FINISHED GRADE

BENT LINE	STATION	OFFSET	ELEVATION	ELEV+DL	NORTHING	EASTING	GIRDER LNTH	CRS-SLP
STA A SLAB	716+18.7200	9.5000	5428.1555		319997.6174	180013.3258	-30.0000	+0.015437
STA BRIDGE	716+48.7200	9.5000	5429.4938		319970.3544	180000.8067	0.0000	+0.030000
CL PIER 1	716+53.7200	9.5000	5429.7169		319965.7564	179998.7108	5.0531	+0.032427
AH BRG 1	716+56.7200	9.5000	5429.8507		319962.9921	179997.4658	8.0849	+0.033883
F-1	716+69.4700	9.5000	5430.4185		319951.1975	179992.2775	20.9703	+0.039972
F-2	716+82.2200	9.5000	5430.9745		319939.3303	179987.2578	33.8556	+0.044809
F-3	716+94.9700	9.5000	5431.5154		319927.3927	179982.4076	46.7409	+0.048068
F-4	717+07.7200	9.5000	5432.0414		319915.3872	179977.7281	59.6263	+0.049748
F-5	717+20.4700	9.5000	5432.5538		319903.3163	179973.2200	72.5116	+0.050000
F-6	717+33.2200	9.5000	5433.0638		319891.1825	179968.8844	85.3969	+0.050000
F-7	717+45.9700	9.5000	5433.5738		319878.9881	179964.7219	98.2823	+0.050000
F-8	717+58.7200	9.5000	5434.0838		319866.7357	179960.7337	111.1676	+0.050000
F-9	717+71.4700	9.5000	5434.5938		319854.4276	179956.9204	124.0529	+0.050000
BK BRG 2	717+84.2200	9.5000	5435.1038		319842.0665	179953.2828	136.9383	+0.050000
CL PIER 2	717+87.2200	9.5000	5435.2238		319839.1505	179952.4526	139.9701	+0.050000
AH BRG 2	717+90.2200	9.5000	5435.3438		319836.2319	179951.6320	143.0020	+0.050000
F-1	718+00.6200	9.5000	5435.7598		319826.0927	179948.8634	153.5123	+0.050000
F-2	718+11.0200	9.5000	5436.1758		319815.9221	179946.2129	164.0227	+0.050000
F-3	718+21.4200	9.5000	5436.5918		319805.7214	179943.6807	174.5331	+0.050000
F-4	718+31.8200	9.5000	5437.0078		319795.4919	179941.2671	185.0435	+0.050000
F-5	718+42.2200	9.5000	5437.4238		319785.2350	179938.9726	195.5539	+0.050000
F-6	718+52.6200	9.5000	5437.8398		319774.9523	179936.7975	206.0643	+0.050000
F-7	718+63.0200	9.5000	5438.2558		319764.6449	179934.7419	216.5747	+0.050000
F-8	718+73.4200	9.5000	5438.6718		319754.3143	179932.8064	227.0851	+0.050000
F-9	718+83.8200	9.5000	5439.0878		319743.9620	179930.9908	237.5955	+0.050000
BK BRG 3	718+94.2200	9.5000	5439.5038		319733.5893	179929.2958	248.1059	+0.050000
CL PIER 3	718+97.2200	9.5000	5439.6238		319730.5934	179928.8293	251.1377	+0.050000

NOTES:

See Sheet B60 for notes.

RIGHT OUT OF DECK (CONT.) PARALLEL TO HORIZONTAL CONTROL 0.250000 FEET BELOW FINISHED GRADE

BENT LINE	STATION	OFFSET	ELEVATION	ELEV+DL	NORTHING	EASTING	GIRDER LNTH	CRS-SLP
AH BRG 3	719+00.2200	9.5000	5439.7438		319727.5962	179928.3728	254.1695	+0.050000
F-1	719+12.8200	9.5000	5440.2478		319714.9915	179926.5653	266.9033	+0.050000
F-2	719+25.4200	9.5000	5440.7518		319702.3626	179924.9354	279.6370	+0.050000
F-3	719+38.0200	9.5000	5441.2558		319689.7120	179923.4836	292.3708	+0.050000
F-4	719+50.6200	9.5000	5441.7598		319677.0423	179922.2098	305.1045	+0.050000
F-5	719+63.2200	9.5000	5442.2638		319664.3558	179921.1146	317.8383	+0.050000
F-6	719+75.8200	9.5000	5442.7678		319651.6552	179920.1982	330.5720	+0.050000
F-7	719+88.4200	9.5000	5443.2718		319638.9429	179919.4605	343.3057	+0.050000
F-8	720+01.0200	9.5000	5443.7758		319626.2215	179918.9020	356.0395	+0.050000
F-9	720+13.6200	9.5000	5444.2798		319613.4936	179918.5225	368.7732	+0.050000
BK BRG 4	720+26.2200	9.5000	5444.7838		319600.7615	179918.3224	381.5070	+0.050000
CL PIER 4	720+29.2200	9.5000	5444.9038		319597.7297	179918.3010	384.5388	+0.050000
AH BRG 4	720+32.2200	9.5000	5445.0238		319594.6979	179918.2899	387.5707	+0.050000
F-1	720+48.1200	9.5000	5445.6598		319578.6297	179918.4008	403.6394	+0.050000
F-2	720+64.0200	9.5000	5446.2958		319562.5661	179918.7972	419.7082	+0.050000
F-3	720+79.9200	9.5000	5446.9318		319546.5120	179919.4789	435.7770	+0.050000
F-4	720+95.8200	9.5000	5447.5678		319530.4726	179920.4455	451.8457	+0.050000
F-5	721+11.7200	9.5000	5448.2038		319514.4528	179921.6970	467.9145	+0.050000
F-6	721+27.6200	9.5000	5448.8398		319498.4578	179923.2329	483.9833	+0.050000
F-7	721+43.5200	9.5000	5449.4758		319482.4926	179925.0527	500.0521	+0.050000
F-8	721+59.4200	9.5000	5450.1118		319466.5622	179927.1558	516.1208	+0.050000
F-9	721+75.3200	9.5000	5450.7478		319450.6718	179929.5415	532.1896	+0.050000
BK BRG 5	721+91.2200	9.5000	5451.3838		319434.8263	179932.2092	548.2584	+0.050000
CL PIER 5	721+94.2200	9.5000	5451.5038		319431.8419	179932.7441	551.2902	+0.050000
AH BRG 5	721+97.2200	9.5000	5451.6238		319428.8595	179933.2889	554.3221	+0.050000
F-1	722+12.6200	9.5000	5452.2398		319413.5791	179936.2432	569.8855	+0.050000
F-2	722+28.0200	9.5000	5452.8558		319398.3520	179939.4599	585.4490	+0.050000
F-3	722+43.4200	9.5000	5453.4718		319383.1823	179942.9381	601.0124	+0.050000
F-4	722+58.8200	9.5000	5454.0878		319368.0747	179946.6769	616.5759	+0.050000
F-5	722+74.2200	9.5000	5454.7038		319353.0338	179950.6750	632.1394	+0.050000
F-6	722+89.6200	9.5000	5455.3198		319338.0639	179954.9312	647.7028	+0.050000
F-7	723+05.0200	9.5000	5455.9358		319323.1694	179959.4446	663.2663	+0.050000
F-8	723+20.4200	9.5000	5456.5518		319308.3547	179964.2133	678.8298	+0.050000
F-9	723+35.8200	9.5000	5457.1678		319293.6244	179969.2364	694.3932	+0.050000
BK BRG 6	723+51.2200	9.5000	5457.7838		319278.9826	179974.5121	709.9567	+0.050000
CL PIER 6	723+54.2200	9.5000	5457.9038		319276.1409	179975.5691	712.9885	+0.050000
AH BRG 6	723+57.2200	9.5000	5458.0238		319273.3029	179976.6357	716.0204	+0.050000
F-1	723+71.3867	9.5000	5458.5905		319259.9500	179981.8004	730.3374	+0.050000
F-2	723+85.5534	9.5000	5459.1571		319246.6805	179987.1758	744.6545	+0.050000
F-3	723+99.7201	9.5000	5459.7238		319233.4978	179992.7605	758.9716	+0.050000
F-4	724+13.8868	9.5000	5460.2905		319220.4051	179998.5533	773.2887	+0.050000
F-5	724+28.0535	9.5000	5460.8571		319207.4057	180004.5525	787.6057	+0.050000
F-6	724+42.2202	9.5000	5461.4238		319194.5029	180010.7567	801.9228	+0.050000
F-7	724+56.3869	9.5000	5461.9905		319181.6999	180017.1643	816.2399	+0.050000
F-8	724+70.5536	9.5000	5462.5571		319169.0000	180023.7739	830.5570	+0.050000
F-9	724+84.7203	9.5000	5463.1238		319156.4062	180030.5836	844.8740	+0.050000
BK BRG 7	724+98.8870	9.5000	5463.6905		319143.9218	180037.5917	859.1911	+0.050000
CL PIER 7	725+01.8870	9.5000	5463.8105		319141.2925	180039.1011	862.2229	+0.050000
AH BRG 7	725+04.8870	9.5000	5463.9305		319138.6681	180040.6193	865.2548	+0.050000
F-1	725+19.0536	9.5000	5464.4971		319126.3449	180047.9069	879.5718	+0.050000
F-2	725+33.2202	9.5000	5465.0638		319114.1385	180055.3886	893.8887	+0.050000
F-3	725+47.3868	9.5000	5465.6305		319102.0521	180063.0627	908.2057	+0.050000
F-4	725+61.5534	9.5000	5466.1971		319090.0887	180070.9271	922.5227	+0.050000
F-5	725+75.7200	9.5000	5466.7638		319078.2513	180078.9798	936.8396	+0.050000
F-6	725+89.8866	9.5000	5467.3305		319066.5429	180087.2189	951.1566	+0.050000
F-7	726+04.0532	9.5000	5467.8971		319054.9662	180095.6423	965.4736	+0.050000
F-8	726+18.2198	9.5000	5468.4543		319043.5244	180104.2479	979.7906	+0.050000
F-9	726+32.3864	9.5000	5468.9682		319032.2201	180113.0334	994.1075	+0.050000
BK BRG 8	726+46.5530	9.5000	5469.4360		319021.0565	180121.9968	1008.4245	+0.050000
CL PIER 8	726+49.5530	9.5000	5469.5292		319018.7106	180123.9175	1011.4563	+0.050000
AH BRG 8	726+52.5530	9.5000	5469.6203		319016.3713	180125.8462	1014.4882	+0.050000
F-1	726+67.9530	9.5000	5470.0552		319004.4651	180135.8691	1030.0517	+0.050000
F-2	726+83.3530	9.5000	5470.4357		318992.7331	180146.0954	1045.6151	+0.050000
F-3	726+98.7530	9.5000	5470.7616		318981.1789	180156.5221	1061.1786	+0.050000
F-4	727+14.1530	9.5000	5471.0330		318969.8058	180167.1459	1076.7420	+0.050000
F-5	727+29.5530	9.5000	5471.2498		318958.6172	180177.9640	1092.3055	+0.050000
F-6	727+44.9530	9.5000	5471.4121		318947.6163	180188.9728	1107.8690	+0.050000
F-7	727+60.3530	9.5000	5471.5200		318936.8064	180200.1694	1123.4324	+0.050000

RIGHT OUT OF DECK (CONT.) PARALLEL TO HORIZONTAL CONTROL 0.250000 FEET BELOW FINISHED GRADE

BENT LINE	STATION	OFFSET	ELEVATION	ELEV+DL	NORTHING	EASTING	GIRDER LNTH	CRS-SLP
F-8	727+75.7530	9.5000	5471.5732		318926.1909	180211.5503	1138.9959	+0.050000
F-9	727+91.1530	9.5000	5471.5720		318915.7727	180223.1122	1154.5594	+0.050000
BK BRG 9	728+06.5530	9.5000	5471.5162		318905.5550	180234.8516	1170.1228	+0.050000
CL PIER 9	728+09.5530	9.5000	5471.4990		318903.5881	180237.1589	1173.1547	+0.050000
AH BRG 9	728+12.5530	9.5000	5471.4797		318901.6290	180239.4727	1176.1865	+0.050000
F-1	728+27.9530	9.5000	5471.3482		318891.6948	180251.4531	1191.7500	+0.050000
F-2	728+43.3530	9.5000	5471.1621		318881.9683	180263.6026	1207.3134	+0.050000
F-3	728+58.7530	9.5000	5470.9216		318872.4522	180275.9176	1222.8769	+0.050000
F-4	728+74.1530	9.5000	5470.6264		318863.1496	180288.3946	1238.4404	+0.050000
F-5	728+89.5530	9.5000	5470.2768		318854.0629	180301.0297	1254.0038	+0.050000
F-6	729+04.9530	9.5000	5469.8727		318845.1950	180313.8194	1269.5673	+0.050000
F-7	729+20.3530	9.5000	5469.4140		318836.5484	180326.7597	1285.1308	+0.050000
F-8	729+35.7530	9.5000	5468.9008		318828.1257	180339.8469	1300.6942	+0.050000
F-9	729+51.1530	9.5000	5468.3330		318819.9295	180353.0771	1316.2577	+0.050000
BK BRG 10	729+66.5530	9.5000	5467.7390		318811.9622	180366.4463	1331.8211	+0.050000
CL PIER 10	729+69.5530	9.5000	5467.6233		318810.4369	180369.0666	1334.8530	+0.050000
AH BRG 10	729+72.5530	9.5000	5467.5076		318808.9204	180371.6920	1337.8848	+0.050000
F-1	729+87.9530	9.5000	5466.9135		318801.2749	180385.2478	1353.4483	+0.050000
F-2	730+03.3530	9.5000	5466.3195		318793.8639	180398.9332	1369.0118	+0.050000
F-3	730+18.7530	9.5000	5465.7255		318786.6893	180412.7441	1384.5752	+0.050000
F-4	730+34.1530	9.5000	5465.1314		318779.7535	180426.6765	1400.1387	+0.050000
F-5	730+49.5530	9.5000	5464.5374		318773.0585	180440.7261	1415.7021	+0.050000
F-6	730+64.9530	9.5000	5463.9434		318766.6061	180454.8888	1431.2656	+0.050000
F-7	730+80.3530	9.5000	5463.3493		318760.3983	180469.1604	1446.8291	+0.050000
F-8	730+95.7530	9.5000	5462.7553		318754.4371	180483.5368	1462.3925	+0.050000
F-9	731+11.1530	9.5000	5462.1613		318748.7240	180498.0136	1477.9560	+0.050000
BK BRG 11	731+26.5530	9.5000	5461.5846		318743.2610	180512.5865	1493.5195	+0.050000
CL PIER 11	731+29.5530	9.5000	5461.4757		318742.2260	180515.4362	1496.5513	+0.050000
AH BRG 11	731+32.5530	9.5000	5461.3680		318741.2005	180518.2893	1499.5832	+0.050000
F-1	731+45.7530	9.5000	5460.9075		318736.8024	180530.8834	1512.9233	+0.050000
F-2	731+58.9530	9.5000	5460.4691		318732.5905	180543.5411	1526.2634	+0.050000
F-3	731+72.1530	9.5000	5460.0527		318728.5657	180556.2594	1539.6035	+0.050000
F-4	731+85.3530	9.5000	5459.6583		318724.7288	180569.0357	1552.9436	+0.050000
F-5	731+98.5530	9.5000	5459.2860		318721.0809	180581.8672	1566.2837	+0.050000
F-6	732+11.7530	9.5000	5458.9358		318717.6226	180594.7512	1579.6238	+0.050000
F-7	732+24.9530	9.5000	5458.6076		318714.3546	180607.6847	1592.9639	+0.050000
F-8	732+38.1530	9.5000	5458.3015		318711.2778	180620.6650	1606.3040	+0.050000
F-9	732+51.3530	9.5000	5458.0174		318708.3927	180633.6892	1619.6442	+0.050000
BK BRG 12	732+64.5530	9.5000	5457.7553		318705.7000	180646.7547	1632.9843	+0.050000
CL PIER 12	732+67.5530	9.5000	5457.6988		318705.1150	180649.7295	1636.0161	+0.050000
AH BRG 12	732+70.5530	9.5000	5457.6435		318704.5399	180652.7063	1639.0480	+0.050000
F-1	732+80.4530	9.5000	5457.4689		318702.7129	180662.5431	1649.0530	+0.050000
F-2	732+90.3530	9.5000	5457.3068		318700.9949	180672.3995	1659.0581	+0.050000
F-3	733+00.2530	9.5000	5457.1570		318699.3859	180682.2743	1669.0632	+0.050000
F-4	733+10.1530	9.5000	5457.0197		318697.8863	180692.1664	1679.0683	+0.050000
F-5	733+20.0530	9.5000	5456.8947		318696.4962	180702.0744	1689.0734	+0.050000
F-6	733+29.9530	9.5000	5456.7822		318695.2157	180711.9971	1699.0785	+0.050000
F-7	733+39.8530	9.5000	5456.6820		318694.0452	180721.9334	1709.0835	+0.050000
F-8	733+49.7530	9.5000	5456.5943		318692.9846	180731.8821	1719.0886	+0.050000
F-9	733+59.6530	9.5000	5456.5179		318692.0340	180741.8419	1729.0937	+0.049886
BK BRG 13	733+69.5530	9.5000	5456.4460		318691.1938	180751.8116	1739.0988	+0.048943
CL PIER 13	733+72.5530	9.5000	5456.4248		318690.9610	180754.8344	1742.1306	+0.048470
END BRIDGE	733+77.5530	9.5000	5456.3903		318690.5954	180759.8743	1747.1837	+0.047487
END A SLAB	734+07.5530	9.5000	5456.2016		318688.9938	180790.1489	1777.5021	+0.036528

NOTES:

See Sheet B60 for notes.

Quantities			
	INITIAL	DATE	
Quantities By			
Checked By			

Revision Dates (Preliminary Stage Only)	
MM/YY	

Design			Detail			
	INITIAL	DATE		INITIAL	DATE	
Designed By	SA	11/09	Detailed By	ERS	11/09	
Checked By			Checked By	KCS	12/09	

18026 1:54:41 PM S:\Tranproj\100002375\14679\Consultants\Bridge\Drawings\14679_pBD-N705.dgn

Print Date: 12/31/2009
File Name: 14679_pBD-N705.dgn
Horiz. Scale: 1:1 Vert. Scale: As Noted
Staff Bridge Branch - Unit 0224 Unit Leader: MH

PBSJ 4601 DTC Boulevard Suite 700 Denver, CO 80237

Sheet Revisions		
Date:	Comments	Init.

Colorado Department of Transportation
DOT DEPARTMENT OF TRANSPORTATION
8833 South Wadsworth Court
Littleton, CO 80128
Phone: 303-972-9112 FAX: 303-972-9114
Region 6 RLB

As Constructed
No Revisions:
Revised:
Void:

SB SANTA FE TO EB C470 RAMP
BRIDGE DECK ELEVATIONS
(13 OF 13)

Designer: S. Abraham
Detailer: E. Schawo
Sheet Subset: Bridge
Structure Numbers: F-16-YE
Subset Sheets: B72 of 72

Project No./Code
ES6 0852-103
17679
Sheet Number 261