GENERAL NOTES

EXCEPT AS SHOWN IN THE PLANS, STRUCTURE EXCAVATION AND BACKFILL SHALL BE IN ACCORDANCE WITH M-206-2 FOR BRIDGES.

EXPANSION JOINT MATERIAL SHALL MEET AASHTO SPECIFICATION M213.

A COLORED STRUCTURAL CONCRETE STAIN FINISH WILL BE REQUIRED, AS SHOWN ON THE PLANS, ON EXPOSED CONCRETE SURFACES. THE COLORS SHALL BE FLESH, EQUIVALENT TO FEDERAL STANDARD 595B COLOR NO. 31667, AND MEDIUM BROWN, EQUIVALENT TO FEDERAL STANDARD 595B COLOR NO. 30219. COLORS ARE TO BE SELECTED FROM TEST PANELS PROVIDED BY THE CONTRACTOR.

THE FOLLOWING STRUCTURAL STEEL SHALL BE AASHTO M270 GRADE 36 (ASTM A-36): DIAPHRAGMS, EXPANSION DEVICES AND BEARING PLATES.

AASHTO M-222 (ASTM A-588) MAY BE SUBSTITUTED FOR M270 GRADE 50 (ASTM A-572) AT NO ADDITIONAL COST TO THE PROJECT.

ALL BOLTS SHALL BE 7/8" DIAMETER, HIGH STRENGTH, UNLESS OTHERWISE NOTED.

LEVELING PADS ARE UNLAMINATED BEARINGS. THEY SHALL BE CUT OR MOLDED FROM AASHTO ELASTOMER GRADE 3, 4, OR 5 AS DESCRIBED IN TABLES 705-1 AND 705-2 WITH A DUROMETER (SHORE "A") HARDNESS OF 60.

GRADE 60 REINFORCING STEEL IS REQUIRED.

ALL REINFORCING STEEL SHALL BE EPOXY COATED UNLESS OTHERWISE NOTED.

(N) DENOTES NON COATED REINFORCING STEEL.

ALL THE PROVISIONS FOR BRIDGE DECK CONCRETE SHALL ALSO APPLY TO APPROACH SLAB CONCRETE.

THE CONTRACTOR SHALL BE RESPONSIBLE FOR THE STABILITY OF THE STRUCTURE DURING CONSTRUCTION.

E.F. = EACH FACE
F.F. = FAR FACE
N.F. = NEAR FACE
E.S. = EACH SIDE
A.S. = AS SHOWN

PERMANENT DECK FORMS ARE OPTIONAL AND MAY BE STEEL OR PRECAST.

FOR STRUCTURE NUMBER INSTALLATION, SEE STANDARD S-614-12.

STATIONS, ELEVATIONS, AND DIMENSIONS CONTAINED IN THESE PLANS ARE CALCULATED FROM A RECENT FIELD SURVEY. THE CONTRACTOR SHALL VERIFY ALL DEPENDENT DIMENSIONS IN THE FIELD BEFORE ORDERING OR FABRICATING ANY MATERIAL.

THE INFORMATION SHOWN ON THESE PLANS CONCERNING THE TYPE AND LOCATION OF UNDERGROUND UTILITIES IS NOT GUARANTEED TO BE ACCURATE OR ALL INCLUSIVE. THE CONTRACTOR IS RESPONSIBLE FOR MAKING HIS OWN DETERMINATION AS TO THE TYPE AND LOCATION OF UNDERGROUND UTILITIES AS MAY BE NECESSARY TO AVOID DAMAGE THERETO. THE CONTRACTOR SHALL CONTACT THE UTILITY NOTIFICATION CENTER OF COLORADO AT 1-800-922-1987 AT LEAST 2 DAYS (NOT INCLUDING THE DAY OF NOTIFICATION) PRIOR TO ANY EXCAVATION OR OTHER EARTHWORK.

PRECAST PRESTRESSED CONCRETE:

CLASS PS CONCRETE f'c = (SEE DETAILS)
f's = 270,000 psi

INDEX OF DRAWINGS

SHEET NO.	TITLE
B1	GENERAL NOTES
B2	SUMMARY OF QUANTITIES
B3	GENERAL LAYOUT
B4	ENGINEERING GEOLOGY
B5	CONSTRUCTION AND FOUNDATION LAYOUT
B6	PILE DETAILS
B7	ABUTMENT 1 DETAILS
B8	ABUTMENT 2 DETAILS
B9	WINGWALL DETAILS
B10	DECK REINFORCING PLAN & SECTION
B11	BT63 GIRDER DETAILS (1 OF 2)
B12	BT63 GIRDER DETAILS (2 OF 2)
B13	PRECAST PANEL DECK FORM (1 OF 2)
B14	PRECAST PANEL DECK FORM (2 OF 2)
B15	LIGHTING DETAILS
B16	BRIDGE RAIL TYPE 7 (SPECIAL) (1 OF 2)
B17	BRIDGE RAIL TYPE 7 (SPECIAL) (2 OF 2)
B18	FENCE CHAIN LINK (SPECIAL) (36 INCH SPLASH GUARD)
B19	APPROACH SLAB DETAILS (1 OF 2)
B20	APPROACH SLAB DETAILS (2 OF 2)
B21	BRIDGE EXPANSION DEVICE (0-4 INCH) (1 OF 2)
B22	BRIDGE EXPANSION DEVICE (0-4 INCH) (2 OF 2)
B23	MECHANICALLY STABILIZED BACKFILL
B24	SLOPE PAVING DETAILS
B25	BRIDGE DECK ELEVATIONS (1 OF 2)
B26	BRIDGE DECK ELEVATIONS (2 OF 2)

DESIGN DATA

AASHTO LRFD BRIDGE DESIGN SPECIFICATIONS, 4TH EDITION WITH 2009 INTERIM REVISIONS

DESIGN METHOD: LOAD AND RESISTANCE FACTOR DESIGN

LIVE LOAD: HL-93 (DESIGN TRUCK OR TANDEM, AND DESIGN LANE LOAD), COLORADO PERMIT VEHICLE
DEAD LOAD: ASSUMES 36 LBS. PER SQ. FT. FOR BRIDGE DECK OVERLAY
ASSUMES 5 LBS. PER SQ. FT. FOR PERMANENT DECK FORMS

REINFORCED CONCRETE:

CLASS D CONCRETE: f'c = 4,500 psi
REINFORCING STEEL: fy = 60,000 psi

THE FOLLOWING TABLE GIVES THE MINIMUM LAP SPLICE LENGTH FOR EPOXY COATED REINFORCING BARS PLACED IN ACCORDANCE WITH SUBSECTION 602.06. THESE SPLICE LENGTHS SHALL BE INCREASED BY 25% FOR BARS SPACED AT LESS THAN 6" ON CENTER.

BAR SIZE	#4	#5	#6	#7	#8	#9	#10	#11
SPLICE LENGTH FOR CLASS D CONCRETE	1'-3"	1'-7"	2'-5"	2'-10"	3'-8"	4'-8"	5'-11"	7'-3"

WHEN THE CONTRACTOR ELECTS TO SUBSTITUTE EPOXY COATED REINFORCEMENT FOR BLACK REINFORCING BARS, THE MINIMUM LAP SPLICE SHALL BE AS DESCRIBED ABOVE.

THE FOLLOWING TABLE GIVES THE MINIMUM LAP SPLICE LENGTH FOR BLACK REINFORCING BARS PLACED IN ACCORDANCE WITH SUBSECTION 602.06. THESE SPLICE LENGTHS SHALL BE INCREASED BY 25% FOR BARS SPACED AT LESS THAN 6" ON CENTER.

BAR SIZE	#4	#5	#6	#7	#8	#9	#10	#11
SPLICE LENGTH FOR CLASS D CONCRETE	1'-1"	1'-4"	1'-7"	1'-11"	2'-6"	3'-1"	3'-11"	4'-10"

THE ABOVE SPLICE LENGTHS SHALL BE INCREASED BY 20 PERCENT FOR 3 BAR BUNDLES AND 33 PERCENT FOR 4 BAR BUNDLES.

THE ABOVE SPLICE LENGTHS MAY BE REDUCED BY 20% WHEN 3" OF CLEAR COVER EXISTS AND BAR SPACING IS 6" OR GREATER ON CENTER.

BRIDGE DESCRIPTION

1 - SIMPLE SPAN (125'-0") BRIDGE, CONCRETE SLAB AND GIRDER, PRESTRESSED, OVER ERICKSON BLVD.
36'-0" ROADWAY CURB-TO-CURB, NO SKEW, 1'-6" BRIDGE RAIL TYPE 7 (SPECIAL)

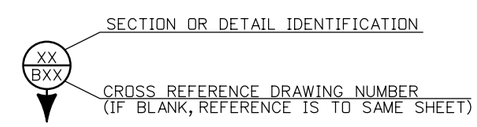

FOR BURIED UTILITY INFORMATION
THREE (3) BUSINESS DAYS BEFORE YOU DIG
CALL 811
(or 1-800-922-1987)
UTILITY NOTIFICATION CENTER OF COLORADO (UNCC)
www.uncc.org

Design				Detail				Quantities		
	INITIAL	DATE		INITIAL	DATE		INITIAL	DATE
Designed By	AML	10/09	Detailed By	RGA	10/09	Quantities By	TRJ	10/09
Checked By	BJA	10/09	Checked By	BJA	10/09	Checked By	JSM	10/09

BJAllen 9:14:04 PM M:\TRN\07-100-311-12\14679\Bridge\Drawings\Erickson Bridge\14679_GenNotes_01.dgn

Print Date: 1/13/2010	Sheet Revisions		
File Name: 14679_GenNotes_01.dgn	Date:	Comments	Init.
Horiz. Scale: 1:1 Vert. Scale: As Noted			
Unit Information 0224 Unit Leader MH			

WILSON & COMPANY Engineers & Architects
999 18TH STREET, SUITE 2600
DENVER, CO 80202
PHONE: 303-297-2976
FAX: 303-297-2693

Colorado Department of Transportation
DOT DEPARTMENT OF TRANSPORTATION
8833 South Wadsworth Court
Littleton, CO 80128
Phone: 303-972-9112 FAX: 303-972-9114
Region 6 RLB

As Constructed	FLYOVER RAMP OVER ERICKSON GENERAL NOTES				Project No./Code
No Revisions:					ES6 0852-103
Revised:	Designer: A. Leifheit	Structure Numbers	F-16-WY		17679
Void:	Detailer: R. Artman				Sheet Number 262
	Sheet Subset: Bridge	Subset Sheets: B1 of B26			

SUMMARY OF QUANTITIES

Item No.	Description	Units	Superstructure	Abut. 1	Abut. 2	Total
206-00100	Structure Backfill (Class 1)	CY	-	236	312	548
206-00360	Mechanical Reinforcement of Soil	CY	-	236	312	548
403-09210	Stone Matrix Asphalt	TON	108	-	-	108
502-11274	Steel Piling (HP12x74)	LF	-	351	393	744
502-00460	Pile Tip	EACH	-	10	10	20
507-00100	Concrete Slope and Ditch Paving (Reinforced)	CY	-	46	50	96
515-00210	Waterproofing (Membrane)	SY	664	-	-	664
518-01004	Bridge Expansion Device (0-4 Inch)	LF	80	-	-	80
601-03040	Concrete Class D (Bridge)	CY	264	34	64	362
601-40400	Structural Concrete Stain	SY	564	332	398	1294
602-00020	Reinforcing Steel (Epoxy Coated)	LB	41682	4277	9530	55489
604-25000	Vane Grate Inlet (Special)	EACH	-	1	-	1
606-10705	Bridge Rail Type 7 (Special)	LF	336	-	-	336
607-53137	Fence Chain Link (Special) (36 Inch)	LF	256	-	-	256
613-00150	1-1/2 Inch Electrical Conduit	LF	688	-	-	688
613-00200	2 Inch Electrical Conduit	LF	344	-	-	344
618-00163	Prestressed Concrete I (BT63)	LF	631	-	-	631

Design			Detail			Quantities		
	INITIAL	DATE		INITIAL	DATE		INITIAL	DATE
Designed By	TRJ	10/09	Detailed By	RGA	10/09	Quantities By	TRJ	10/09
Checked By	JSM	10/09	Checked By	JSM	10/09	Checked By	JSM	10/09

BJAllen 9:14:32 PM M:\TRN\07-100-311-12\14679\Bridge\Drawings\Erickson Bridge\14679_SumApproxQuant_01.dgn

Print Date: 1/13/2010
File Name: 14679_SumApproxQuant_01.dgn
Horiz. Scale: 1:1 Vert. Scale: As Noted
Unit Information 0224 Unit Leader MH

WILSON & COMPANY Engineers & Architects
999 18TH STREET, SUITE 2600
DENVER, CO 80202
PHONE: 303-297-2976
FAX: 303-297-2693

Sheet Revisions		
Date:	Comments	Init.

Colorado Department of Transportation
DOT DEPARTMENT OF TRANSPORTATION
8833 South Wadsworth Court
Littleton, CO 80128
Phone: 303-972-9112 FAX: 303-972-9114
Region 6 RLB

As Constructed
No Revisions:
Revised:
Void:

FLYOVER RAMP OVER ERICKSON
SUMMARY OF QUANTITES

Designer:	T. Johnson	Structure Numbers	F-16-WY
Detailer:	R. Artman		
Sheet Subset:	Bridge	Subset Sheets:	B2 of B26

Project No./Code
ES6 0852-103
17679
Sheet Number 263

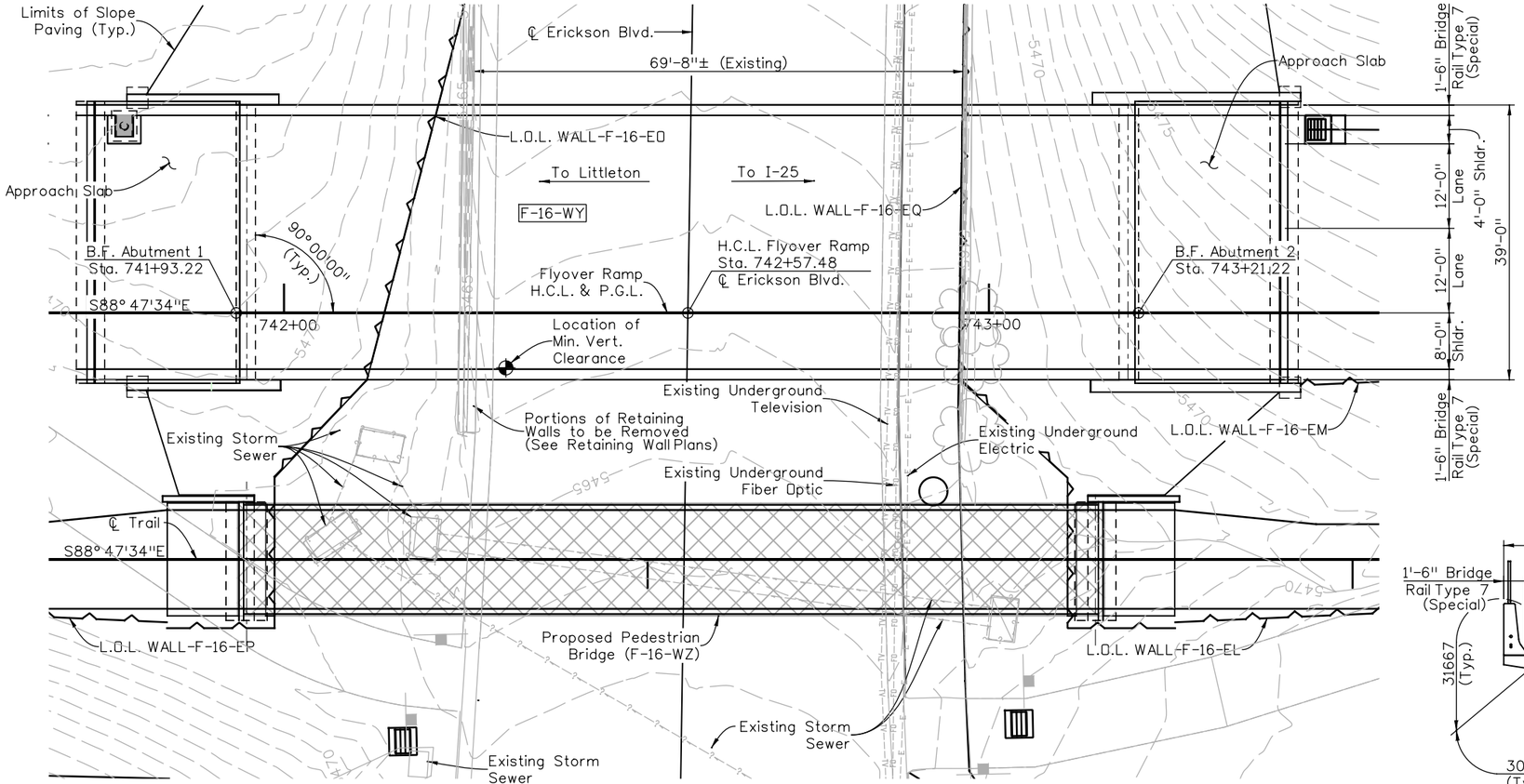

PLAN

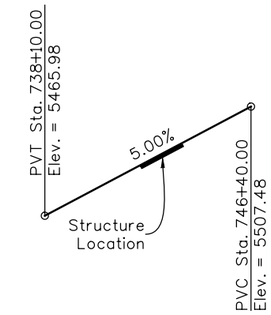

PROFILE GRADE

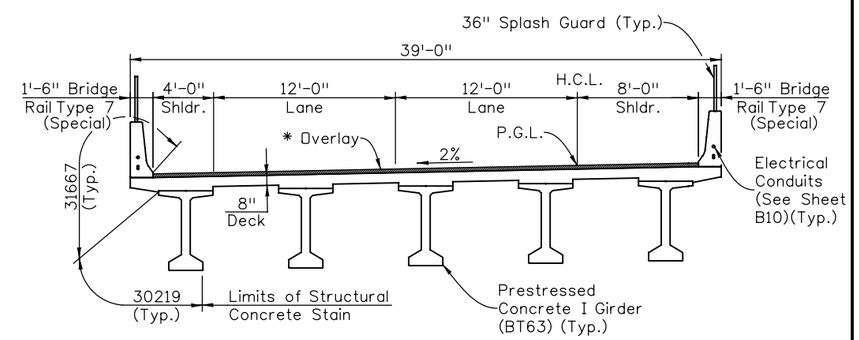

TYPICAL SECTION

(Looking Upstation)

* 3" S.M.A. over Waterproofing Membrane

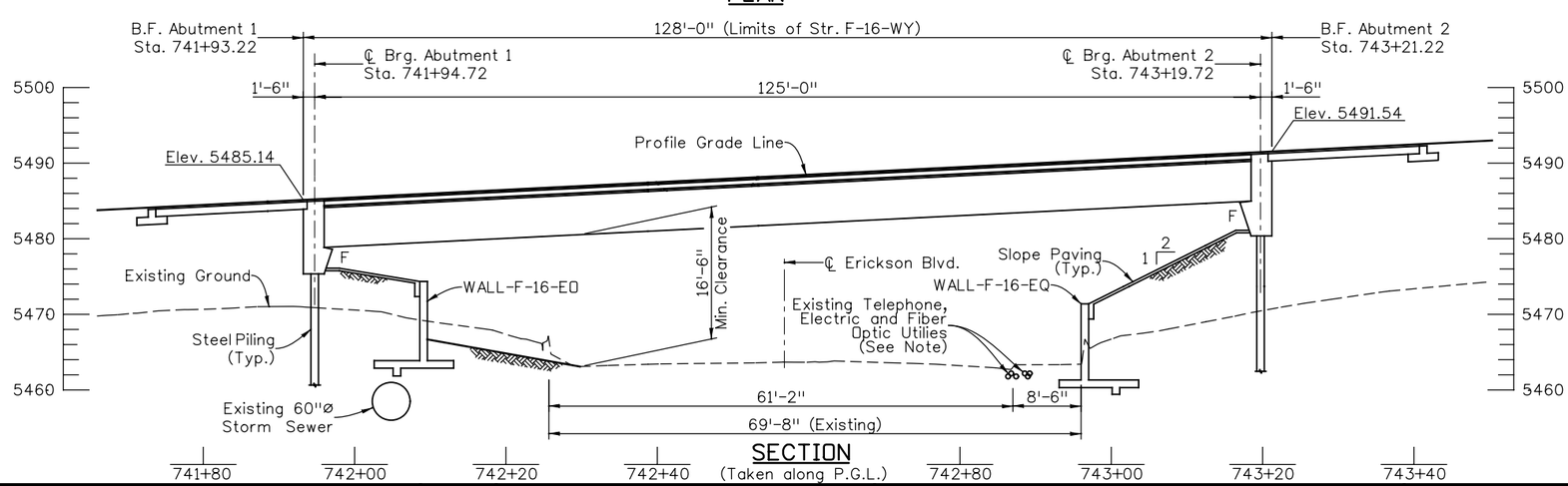

SECTION (Taken along P.G.L.)

Quantities		
	INITIAL	DATE
Quantities By	TRJ	10/09
Checked By	JSM	10/09

Detail		
	INITIAL	DATE
Detailed By	RGA	10/09
Checked By	BJA	10/09

Design		
	INITIAL	DATE
Designed By	AML	10/09
Checked By	BJA	10/09

Print Date: 1/14/2010
File Name: 14679_GenLay_01.dgn
Horiz. Scale: 1:1 Vert. Scale: As Noted
Unit Information 0224 Unit Leader MH

WILSON & COMPANY Engineers & Architects
999 18TH STREET, SUITE 2600
DENVER, CO 80202
PHONE: 303-297-2976
FAX: 303-297-2693

Sheet Revisions

Date:	Comments	Init.

Colorado Department of Transportation
8833 South Wadsworth Court
Littleton, CO 80128
Phone: 303-972-9112 FAX: 303-972-9114
Region 6 RLB

As Constructed
No Revisions:
Revised:
Void:

FLYOVER RAMP OVER ERICKSON
GENERAL LAYOUT

Designer: A. Leifheit
Detailer: D. Anderson
Sheet Subset: Bridge
Structure Numbers: F-16-WY
Subset Sheets: B3 of B26

Project No./Code
ES6 0852-103
17679
Sheet Number 264

rgartman 1:30:53 PM M:\TRN\07-100-311-12\14679\Bridge\Drawings\Erickson Bridge\14679_GenLay_01.dgn

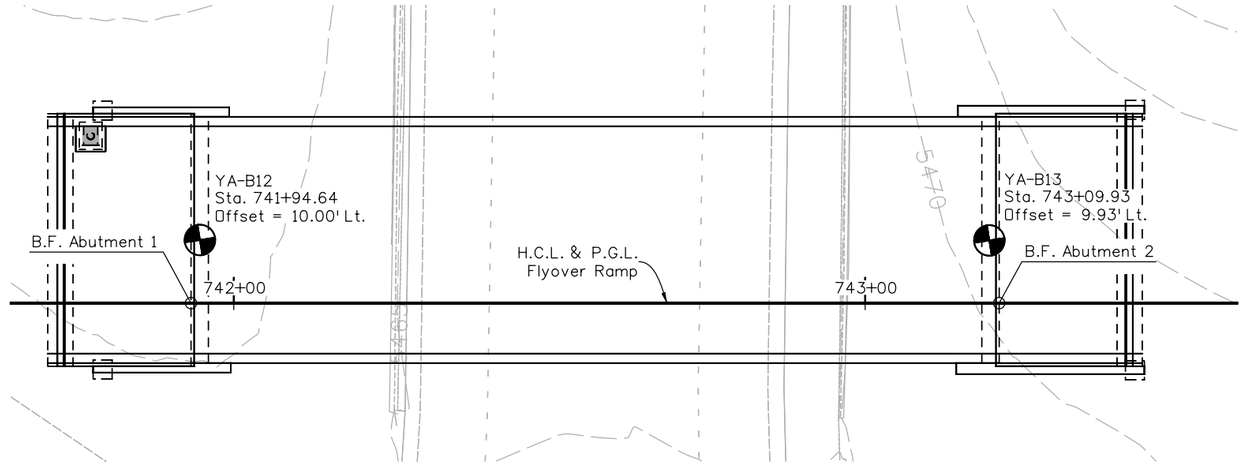

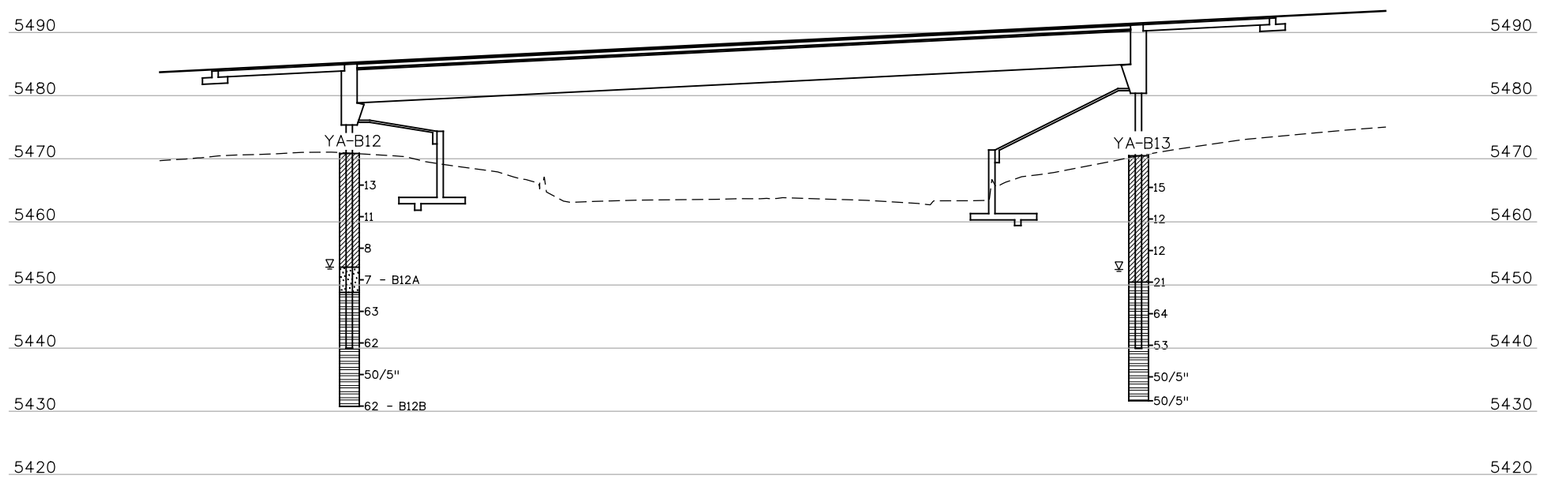

SUMMARY OF TEST RESULTS

Sample No.	Depth	Classification: Corps of Engrs. or Visual	Classification: AASHTO	Grading Analysis (AASHTO) Percent: Gravel	Coarse Sand	Fine Sand	Silt and Clay	Atterberg Limits: Liquid Limit W	Plastic Limit W	Index W	Water Content W %	Dry Unit Weight P.C.F.
B12A	19.5	Clay	A-2-6(1)	0	14	54	32	29	11	18	19.8	105.4
B12B	39.5	Claystone									14.3	113.2

TYPE OF MATERIAL

- Clay
- Silty Claystone
- Sand

Note: Boulders may be encountered at any depth

LEGEND

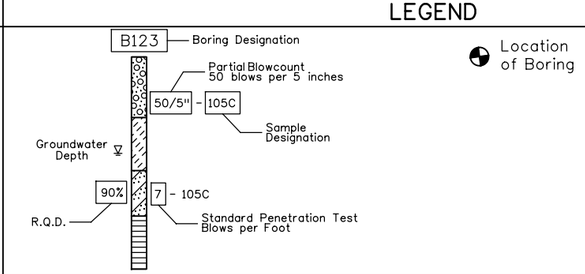

Print Date: 1/14/2010
File Name: 14679_EngGeology_01.dgn
Horiz. Scale: 1:1 Vert. Scale: As Noted
Unit Information 0224 Unit Leader MH

WILSON & COMPANY Engineers & Architects
999 18TH STREET, SUITE 2600
DENVER, CO 80202
PHONE: 303-297-2976
FAX: 303-297-2693

Sheet Revisions		
Date:	Comments	Init.

Colorado Department of Transportation
DOT DEPARTMENT OF TRANSPORTATION
8833 South Wadsworth Court
Littleton, CO 80128
Phone: 303-972-9112 FAX: 303-972-9114
Region 6 RLB

As Constructed
No Revisions:
Revised:
Void:

FLYOVER RAMP OVER ERICKSON
ENGINEERING GEOLOGY

Designer: T. Schlittenhart
Detailer: R. Artman
Sheet Subset: Bridge
Structure Numbers: F-16-WY
Subset Sheets: B4 of B26

Project No./Code
ES6 0852-103
17679
Sheet Number 265

Design	INITIAL	DATE
Designed By	BJA	10/09
Checked By	TMS	10/09
Detailed By	RGA	10/09
Checked By	TMS	10/09
Quantities By	TMS	10/09
Checked By	TMS	10/09

rgartman 11:12:20 AM M:\TRN\07-100-311-12\14679\Bridge\Drawings\Erickson Bridge\14679_EngGeology_01.dgn

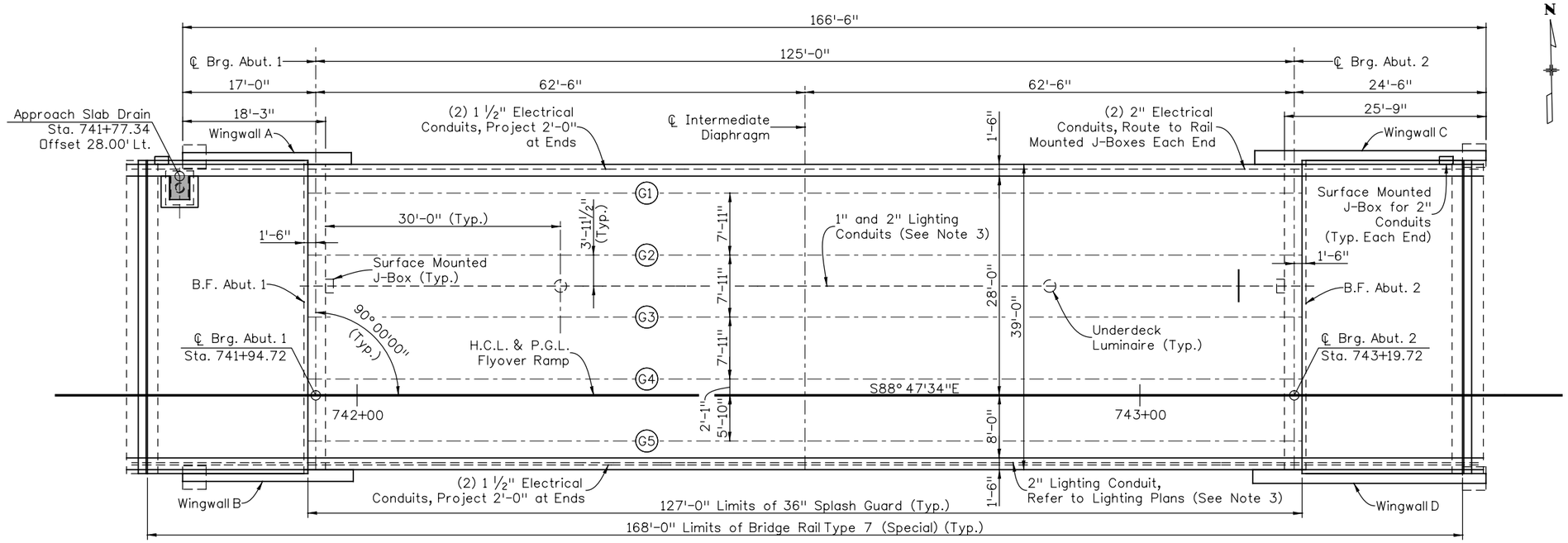

CONSTRUCTION LAYOUT

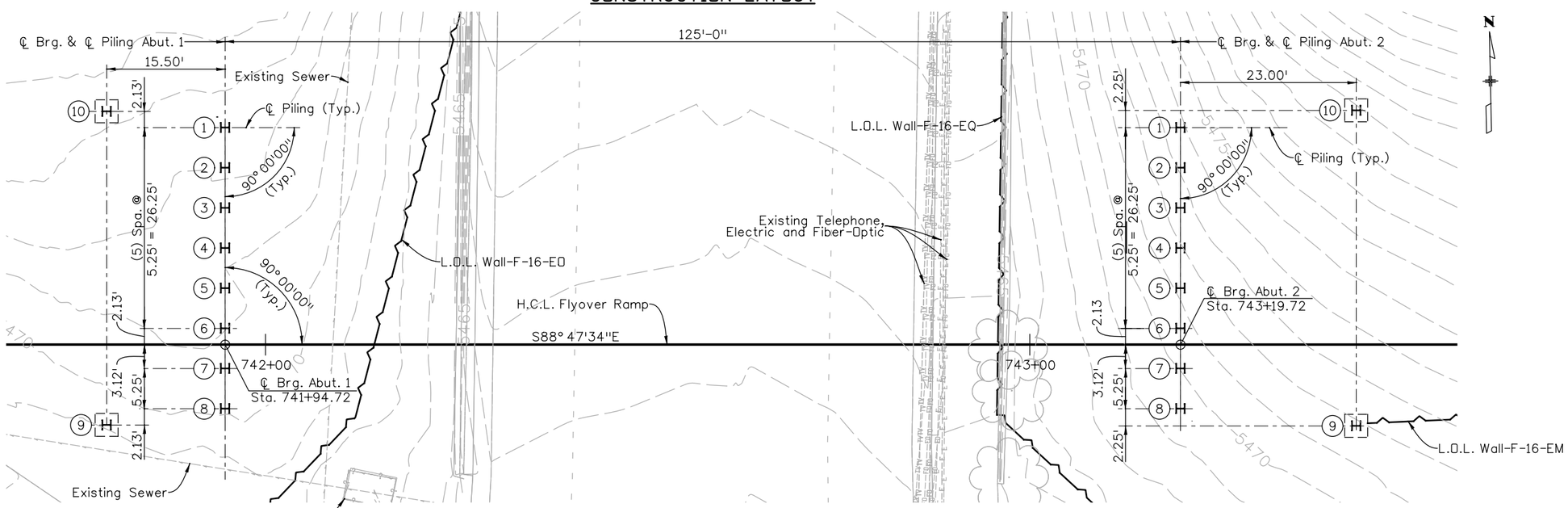

FOUNDATION LAYOUT

FOR BURIED UTILITY INFORMATION
THREE (3) BUSINESS DAYS
BEFORE YOU DIG
CALL 811
(or 1-800-922-1987)
UTILITY NOTIFICATION
CENTER OF COLORADO (UNCC)
www.uncc.org

NOTES:

1. See Abutment Details for J-Box location.
2. Items designated as Electrical Conduit shall be measured and paid for under Items 613, 1-1/2 Inch and 2 Inch Electrical Conduit, quantified in the Bridge Plans.
3. Items designated as Lighting Conduit shall be measured and paid for under Items 613, 1 Inch and 2 Inch Electrical Conduit, quantified in the Lighting Plans.
4. Junction boxes shall be included in the work.
5. Refer to Lighting Plans for locations of barrier lighting.

(1) = Pile Number

Design			Detail			Quantities		
	INITIAL	DATE		INITIAL	DATE		INITIAL	DATE
Designed By	AML	10/09	Detailed By	RGA	10/09	Quantities By	TRJ	10/09
Checked By	MJN	10/09	Checked By	MJN	10/09	Checked By	JSM	10/09

rgartman 11:10:22 AM M:\TRN\07-100-311-12\14679\Bridge\Drawings\Erickson Bridge\14679_ConstLayout_01.dgn

Print Date: 1/14/2010
File Name: 14679_ConstLayout_01.dgn
Horiz. Scale: 1:1 Vert. Scale: As Noted
Unit Information 0224 Unit Leader MH

WILSON & COMPANY Engineers & Architects
999 18TH STREET, SUITE 2800
DENVER, CO 80202
PHONE: 303-297-2976
FAX: 303-297-2893

Sheet Revisions		
Date:	Comments	Init.

Colorado Department of Transportation
8833 South Wadsworth Court
Littleton, CO 80128
Phone: 303-972-9112 FAX: 303-972-9114
Region 6 RLB

As Constructed
No Revisions:
Revised:
Void:

FLYOVER RAMP OVER ERICKSON
CONSTRUCTION AND
FOUNDATION LAYOUT

Designer: A. Leifheit
Detailer: R. Artman
Sheet Subset: Bridge
Structure Numbers: F-16-WY
Subset Sheets: B5 of B26

Project No./Code
ES6 0852-103
17679
Sheet Number 266

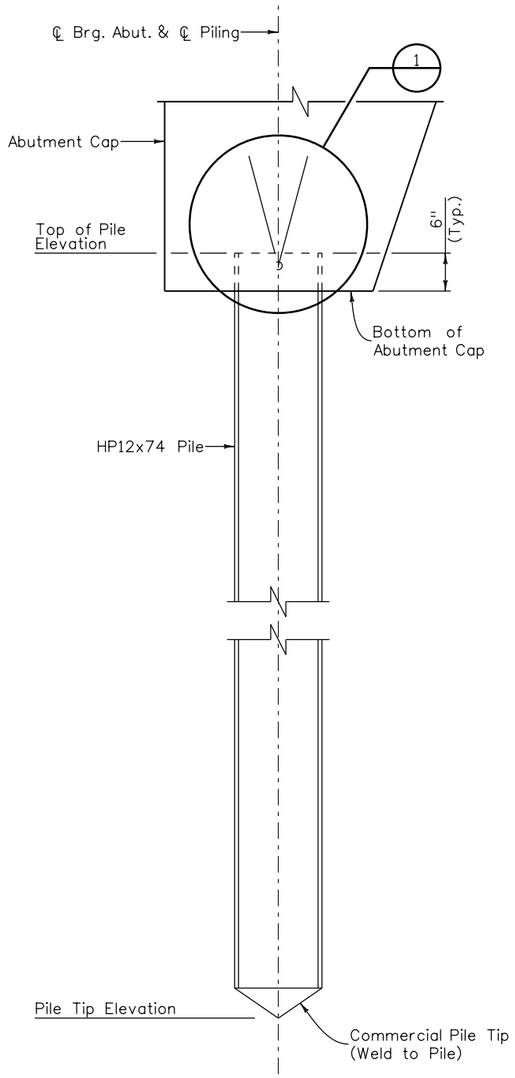

PILE ELEVATION

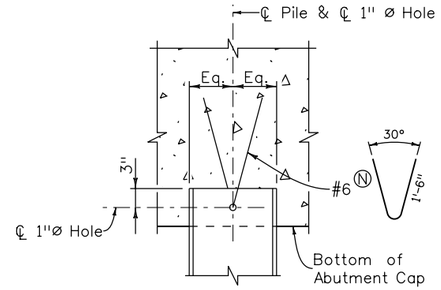

DETAIL 1

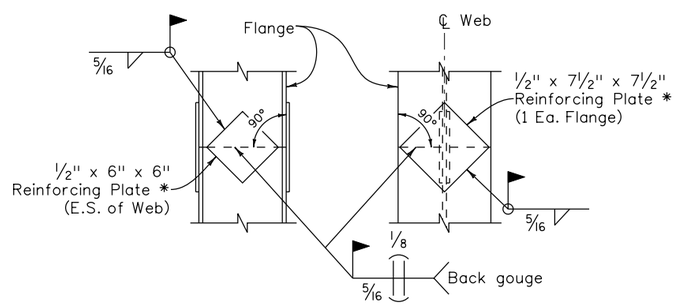

PILE SPLICE DETAIL

* Reinforcing plates are required when pile splice is within 15 feet of the finished groundline. Before reinforcing plates are installed, grind the weld contours that will be covered by the reinforcing plates.

PILE DATA

Location	Pile Number	Pile Size	Top of Pile Elevation	Estimated Pile Tip Elevation	Maximum Factored Load (kip)
Abutment 1	1-8	HP12x74	5475.25	5440.00	312
Abutment 1	9-10	HP12x74	5474.25	5440.00	-
Abutment 2	1-8	HP12x74	5479.50	5440.00	315
Abutment 2	9-10	HP12x74	5478.50	5440.00	-

NOTES:

1. Piles and reinforcing plates shall be AASHTO M270, Grade 50 (Fy = 50 ksi).
2. All piles shall be driven to virtual refusal.
3. Pile tip elevations shown are based on a 5'-0" minimum penetration into bedrock.
4. A commercial pile tip shall be used on all piles. Pile tip as manufactured by VersaSteel or approved equal. Pile tips shall be welded to pile in accordance with manufacturer's recommendations.
5. A minimum of one pile per abutment shall be monitored using a Pile Driving Analyzer (PDA) in accordance with Revised Section 502 of the Standard Specifications. The monitored pile shall be a pile on the ℄ of Bearing (Pile Numbers 1-8). All data from the PDA shall be submitted to the engineer.
6. The Contractor's Engineer shall be responsible for monitoring pile driving.
7. Pile design based upon recommendations provided by Yeh & Associates, Inc.
8. Nominal Axial Resistance for HP12x74 at pile tip is 541 kips.
9. Strength Reduction Factors are as follows:

   For Axial Resistance at Pile Tip:
   $\varnothing_c$ = 0.50

   For Combined Axial & Flexural Resistance:
   $\varnothing_c$ = 0.70 (Axial)
   $\varnothing_f$ = 1.00 (Flexure)

10. The cost of #6 V rebar shall not be paid for seperately, but shall be included in the cost of Item 502-11274, Steel Piling.

Design	INITIAL	DATE	Detail	INITIAL	DATE	Quantities	INITIAL	DATE
Designed By	BJA	10/09	Detailed By	RGA	10/09	Quantities By	TRJ	10/09
Checked By	MJN	10/09	Checked By	MJN	10/09	Checked By	JSM	10/09

BJAllen 9:21:35 PM M:\TRN\07-100-311-12\14679\Bridge\Drawings\Erickson Bridge\14679_PileDet_01.dgn

Print Date: 1/13/2010
File Name: 14679_PileDet_01.dgn
Horiz. Scale: 1:1 Vert. Scale: As Noted
Unit Information 0224 Unit Leader MH

WILSON & COMPANY Engineers & Architects
999 18TH STREET, SUITE 2600
DENVER, CO 80202
PHONE: 303-297-2976
FAX: 303-297-2693

Sheet Revisions		
Date:	Comments	Init.

Colorado Department of Transportation
DOT DEPARTMENT OF TRANSPORTATION
8833 South Wadsworth Court
Littleton, CO 80128
Phone: 303-972-9112 FAX: 303-972-9114
Region 6 RLB

As Constructed
No Revisions:
Revised:
Void:

FLYOVER RAMP OVER ERICKSON
PILE DETAILS

Designer: B. Allen
Detailer: R. Artman
Sheet Subset: Bridge
Structure Numbers: F-16-WY
Subset Sheets: B6 of B26

Project No./Code
ES6 0852-103
17679
Sheet Number 267

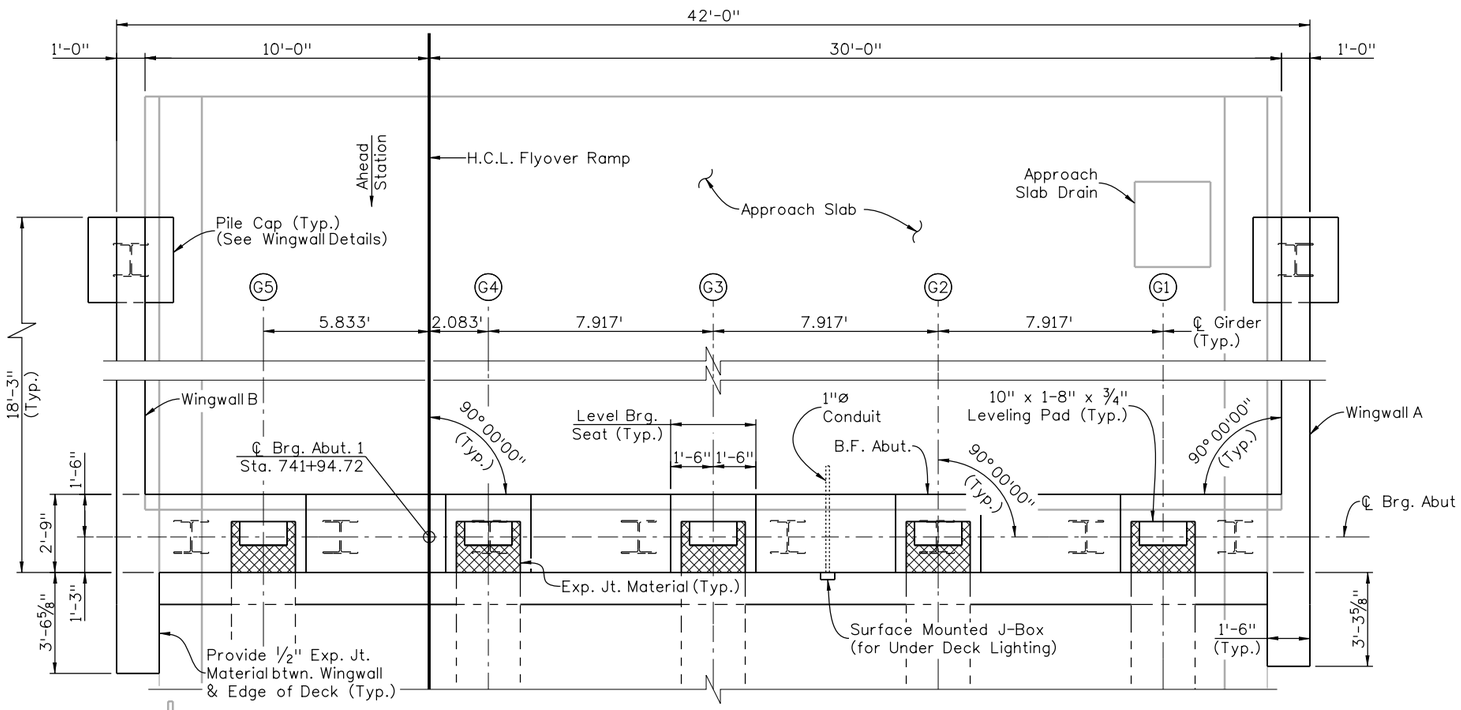

PLAN

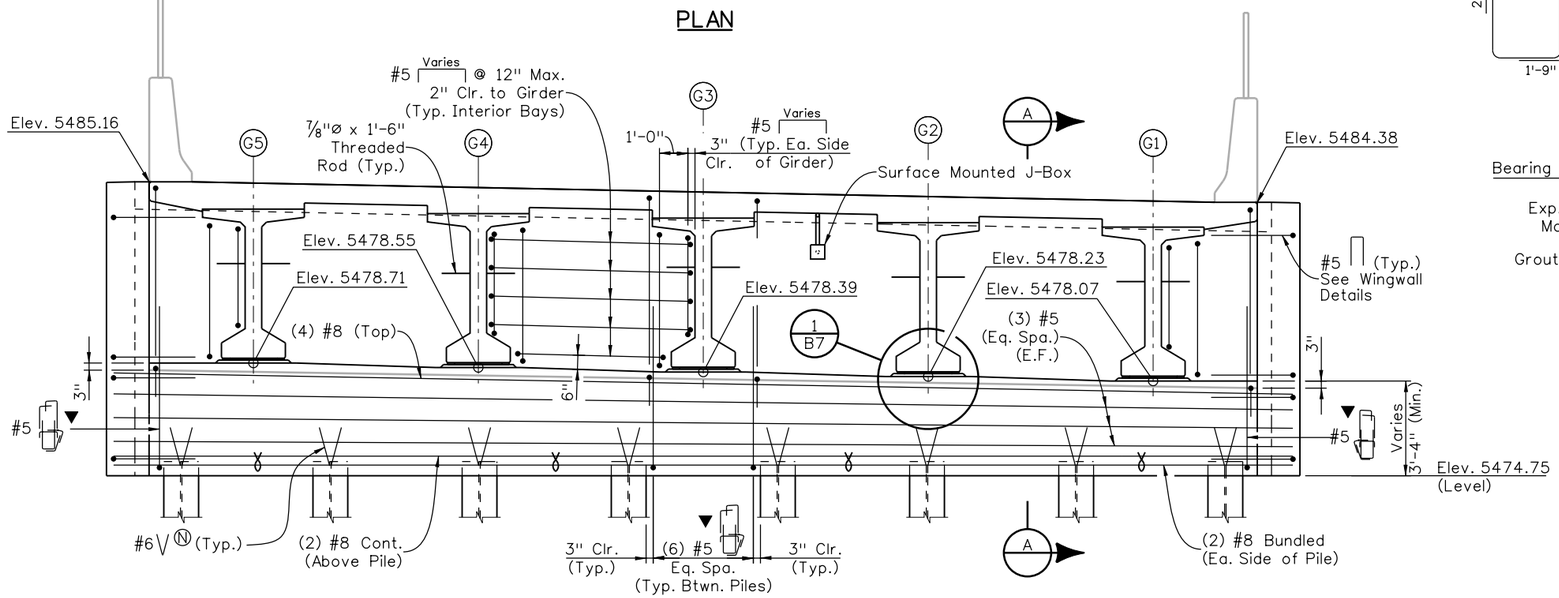

ELEVATION

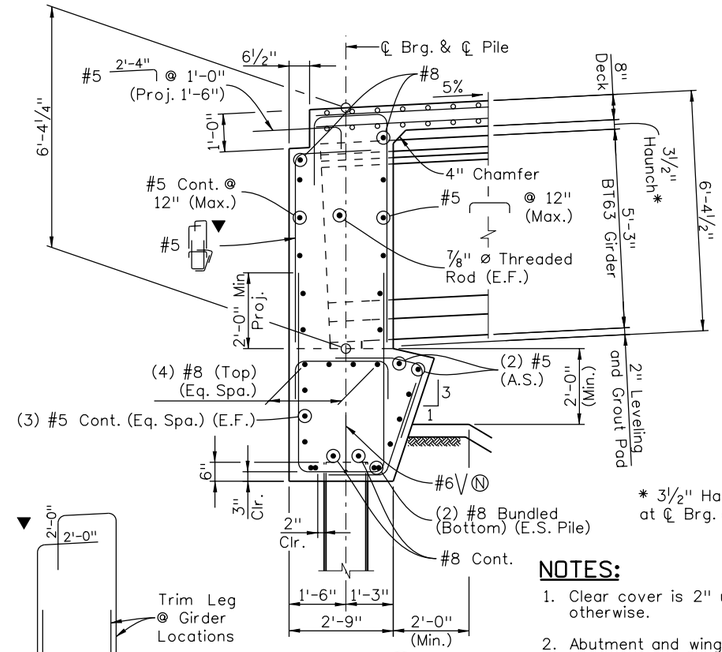

SECTION A

* 3½" Haunch measured at ℄ Brg. and ℄ Girder

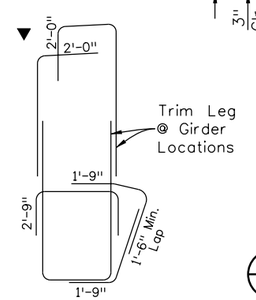

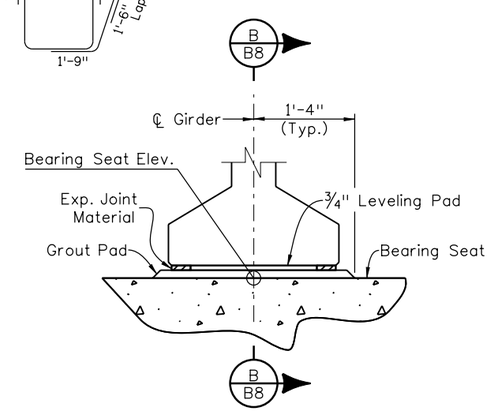

DETAIL 1/B7

Typ. @ All Girders

NOTES:

1. Clear cover is 2" unless noted otherwise.
2. Abutment and wingwall concrete shall be Class D (Bridge), f'c = 4,500 psi.
3. Elevations shown are taken along ℄ Brg. Abut. except as noted.
4. All exposed concrete surfaces of the abutment and wingwalls shall receive a Structural Concrete Stain Finish to 1'-0" below the finished ground line. The color shall be Flesh, Color No. 31667.
5. See Wingwall Details for wingwall reinforcement.
6. See Electrical and Lighting Plans for Under Deck Lighting details.
7. Surface Mounted J-Box shall not be paid for seperately, but shall be included in the cost of Item No. 613-00100, 1 Inch Electrical Conduit.

Design	INITIAL	DATE	Detail	INITIAL	DATE	Quantities	INITIAL	DATE
Designed By	BJA	10/09	Detailed By	RGA	10/09	Quantities By	TRJ	10/09
Checked By	MJN	10/09	Checked By	MJN	10/09	Checked By	JSM	10/09

BJAllen 9:22:18 PM M:\TRN\07-100-311-12\14679\Bridge\Drawings\Erickson Bridge\14679_Abutment1Det_01.dgn

Print Date: 1/13/2010
File Name: 14679_Abutment1Det_01.dgn
Horiz. Scale: 1:1 Vert. Scale: As Noted
Unit Information 0224 Unit Leader MH

WILSON & COMPANY Engineers & Architects
999 18TH STREET, SUITE 2800
DENVER, CO 80202
PHONE: 303-297-2976
FAX: 303-297-2693

Sheet Revisions

Date:	Comments	Init.

Colorado Department of Transportation
DOT
8833 South Wadsworth Court
Littleton, CO 80128
Phone: 303-972-9112 FAX: 303-972-9114
Region 6 RLB

As Constructed
No Revisions:
Revised:
Void:

FLYOVER RAMP OVER ERICKSON
ABUTMENT 1 DETAILS

Designer: B. Allen
Detailer: R. Artman
Sheet Subset: Bridge
Structure Numbers F-16-WY
Subset Sheets: B7 of B26

Project No./Code
ES6 0852-103
17679
Sheet Number 268

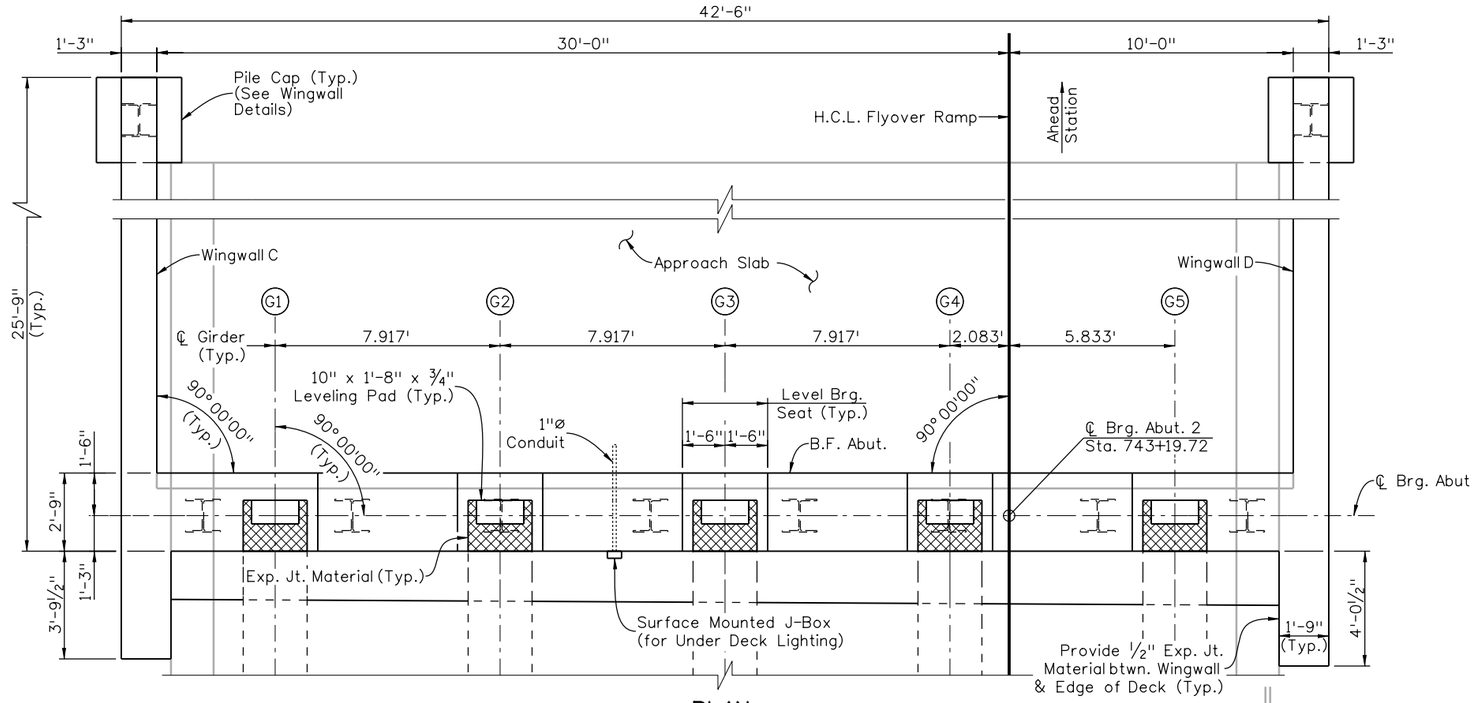

PLAN

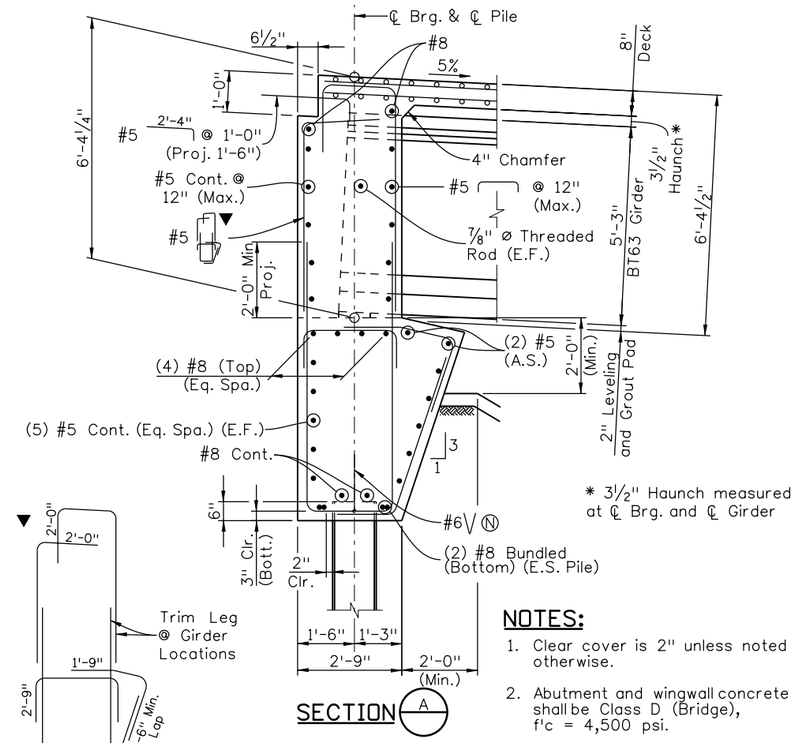

SECTION A

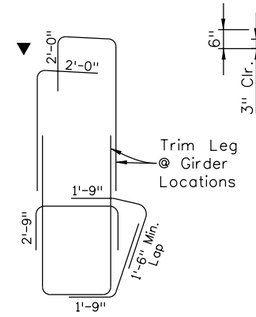

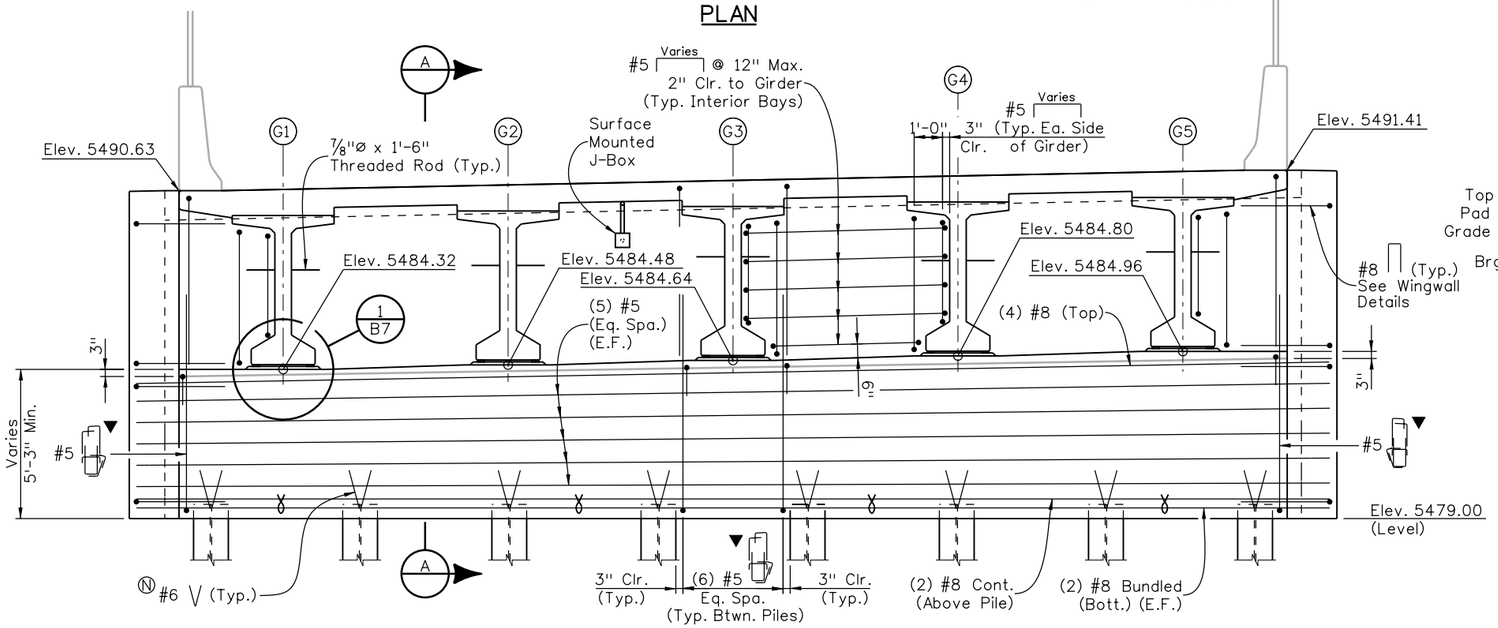

ELEVATION

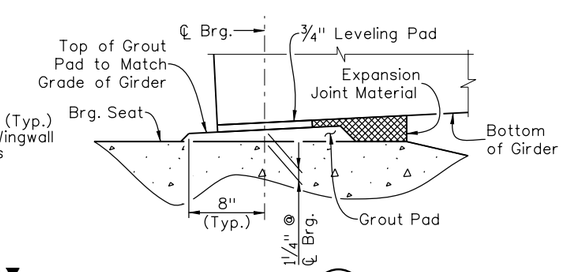

SECTION B B7

NOTES:

1. Clear cover is 2" unless noted otherwise.
2. Abutment and wingwall concrete shall be Class D (Bridge), f'c = 4,500 psi.
3. Elevations shown are taken along ℄ Brg. Abut. except as noted.
4. All exposed concrete surfaces of the abutment and wingwalls shall receive a Structural Concrete Stain Finish to 1'-0" below the finished ground line. The color shall be Flesh, Color No. 31667.
5. See Wingwall Details for wingwall reinforcement.
6. See Electrical and Lighting Plans for Under Deck Lighting details.
7. Surface Mounted J-Box shall not be paid for separately, but shall be included in the cost of Item No. 613-00100, 1 Inch Electrical Conduit.

Quantities	INITIAL	DATE
Quantities By	BJA	10/09
Checked By	MJN	10/09

Detail	INITIAL	DATE
Detailed By	RGA	10/09
Checked By	MJN	10/09

Design	INITIAL	DATE
Designed By	BJA	10/09
Checked By	MJN	10/09

BJAllen 9:22:56 PM M:\TRN\07-100-311-12\14679\Bridge\Drawings\Erickson Bridge\14679_Abutment2Det_01.dgn

Print Date: 1/13/2010
File Name: 14679_Abutment2Det_01.dgn
Horiz. Scale: 1:1 Vert. Scale: As Noted
Unit Information 0224 Unit Leader MH

WILSON & COMPANY Engineers & Architects
999 18TH STREET, SUITE 2600
DENVER, CO 80202
PHONE: 303-297-2976
FAX: 303-297-2693

Sheet Revisions		
Date:	Comments	Init.

Colorado Department of Transportation
DOT
8833 South Wadsworth Court
Littleton, CO 80128
Phone: 303-972-9112 FAX: 303-972-9114
Region 6 RLB

As Constructed
No Revisions:
Revised:
Void:

FLYOVER RAMP OVER ERICKSON
ABUTMENT 2 DETAILS

Designer:	B. Allen	Structure Numbers	F-16-WY
Detailer:	R. Artman		
Sheet Subset:	Bridge	Subset Sheets:	B8 of B26

Project No./Code
ES6 0852-103
17679
Sheet Number 269

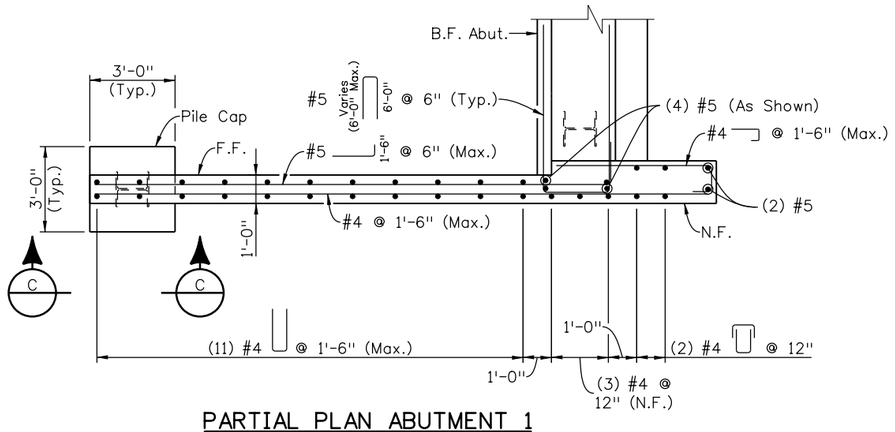

PARTIAL PLAN ABUTMENT 1

(Wingwall B shown, Wingwall A similar)
(Abutment Reinf. not shown)

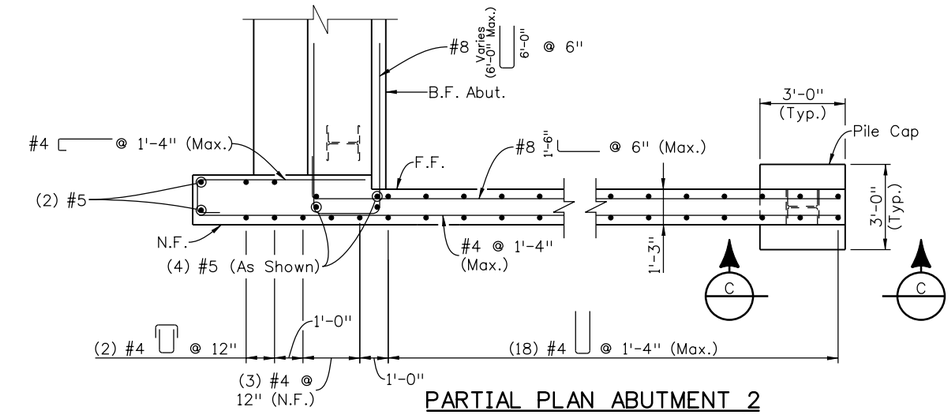

PARTIAL PLAN ABUTMENT 2

(Wingwall D shown, Wingwall C similar)
(Abutment Reinf. not shown)

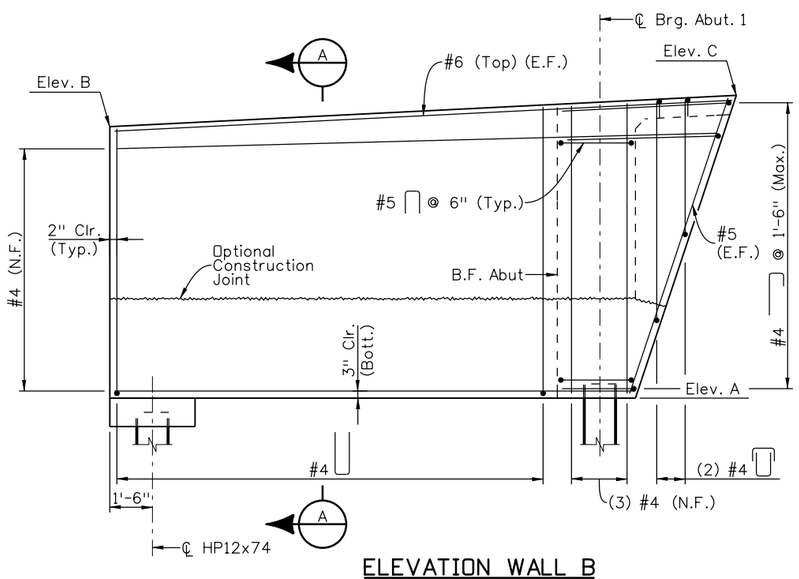

ELEVATION WALL B

(Wingwall B shown, Wingwall A similar)

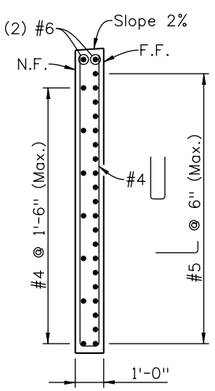

SECTION A

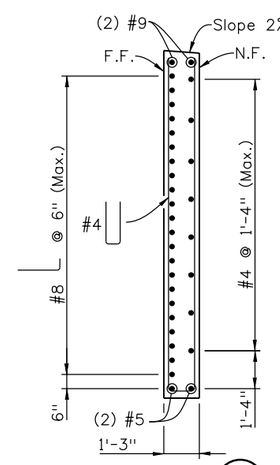

SECTION B

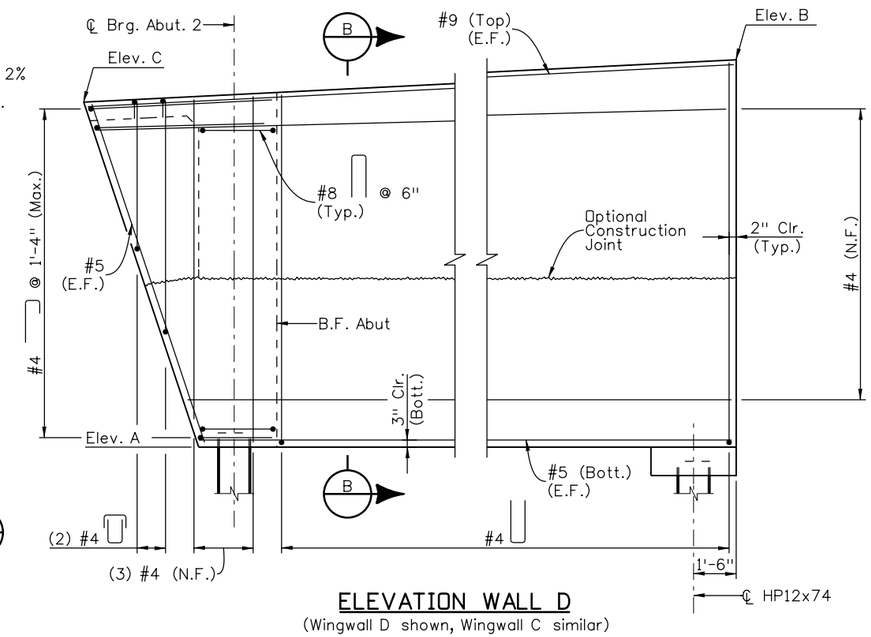

ELEVATION WALL D

(Wingwall D shown, Wingwall C similar)

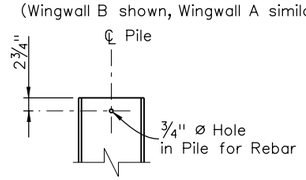

DETAIL 1

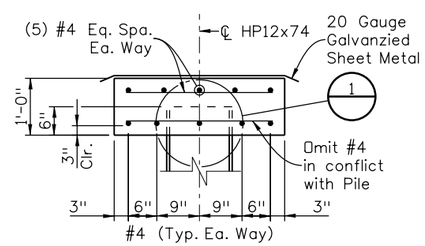

SECTION C

TABLE OF ELEVATIONS			
Wingwall	Elev. A	Elev. B	Elev. C
A	5474.75	5483.50	5484.59
B	5474.75	5484.30	5485.40
C	5479.00	5491.84	5490.36
D	5479.00	5492.64	5491.15

NOTE:
All elevations are at Far Face of wall.

Quantities			
	INITIAL	DATE	
Quantities By	TRJ	10/09	
Checked By	JSM	10/09	

Detail			
	INITIAL	DATE	
Detailed By	RGA	10/09	
Checked By	BJA	10/09	

Design			
	INITIAL	DATE	
Designed By	TRJ	10/09	
Checked By	MJN	10/09	

BJAllen 9:24:09 PM M:\TRN\07-100-311-12\14679\Bridge\Drawings\Erickson Bridge\14679_WingwallDet_1.dgn

Print Date: 1/13/2010
File Name: 14679_WingwallDet_1.dgn
Horiz. Scale: 1:1 Vert. Scale: As Noted
Unit Information 0224 Unit Leader MH

WILSON & COMPANY Engineers & Architects
999 18TH STREET, SUITE 2800
DENVER, CO 80202
PHONE: 303-297-2976
FAX: 303-297-2993

Sheet Revisions		
Date:	Comments	Init.

Colorado Department of Transportation
CDOT DEPARTMENT OF TRANSPORTATION
8833 South Wadsworth Court
Littleton, CO 80128
Phone: 303-972-9112 FAX: 303-972-9114
Region 6 RLB

As Constructed
No Revisions:
Revised:
Void:

FLYOVER RAMP OVER ERICKSON
WINGWALL DETAILS

Designer: T. Johnson
Detailer: R. Artman
Sheet Subset: Bridge
Structure Numbers F-16-WY
Subset Sheets: B9 of B26

Project No./Code
ES6 0852-103
17679
Sheet Number 270

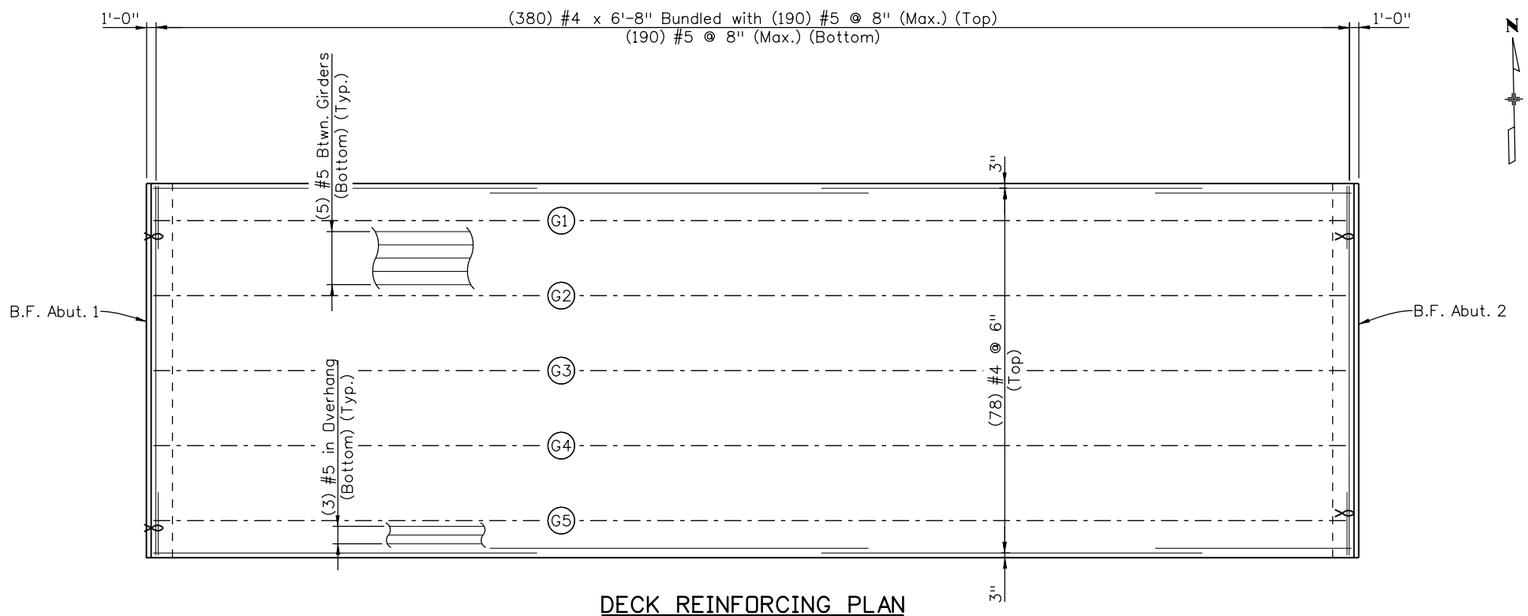

DECK REINFORCING PLAN

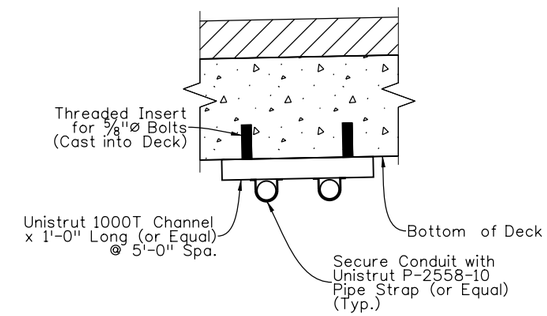

DETAIL 1

NOTES:

1. Deck concrete shall be Class D (Bridge).
2. If Precast Deck Panels are used, the Contractor shall submit an alternate method of attaching electrical conduit as required.
3. All Conduit Mounting Bracket materials shall not be paid for seperately, but shall be included in the work.

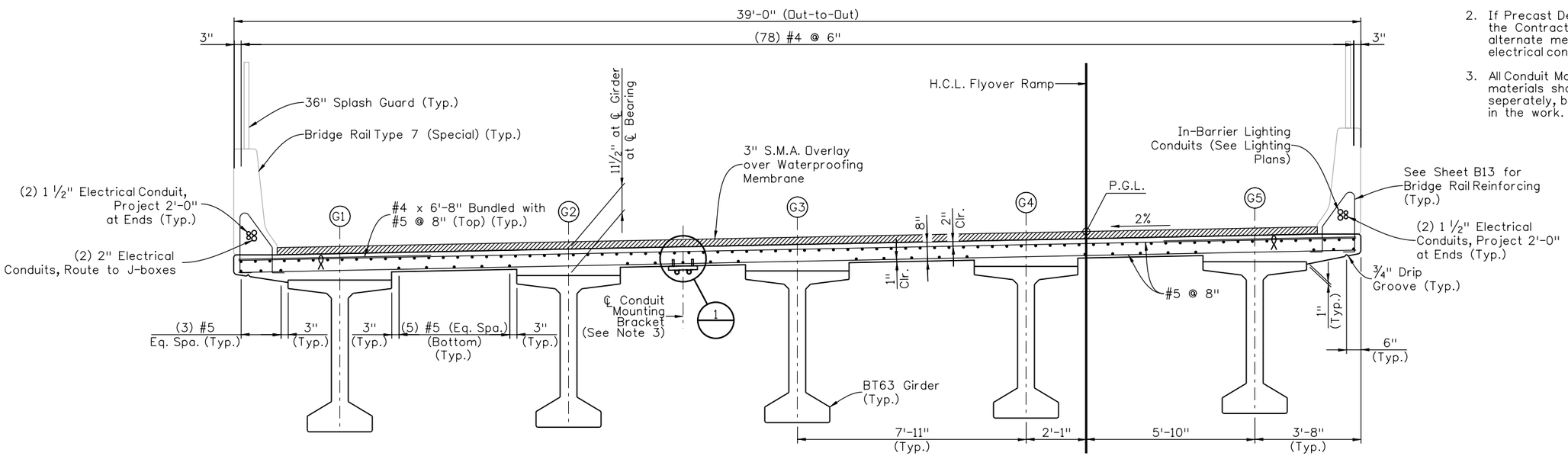

SECTION

Quantities			
	INITIAL	DATE	
Quantities By	TRJ	10/09	
Checked By	JSM	10/09	

Detail			
	INITIAL	DATE	
Detailed By	RGA	10/09	
Checked By	BJA	10/09	

Design			
	INITIAL	DATE	
Designed By	TRJ	10/09	
Checked By	BJA	10/09	

BJAllen 9:25:43 PM M:\TRN\07-100-311-12\14679\Bridge\Drawings\Erickson Bridge\14679_SuperStrDet_01.dgn

Print Date: 1/13/2010
File Name: 14679_SuperStrDet_01.dgn
Horiz. Scale: 1:1 Vert. Scale: As Noted
Unit Information 0224 Unit Leader MH

WILSON & COMPANY Engineers & Architects
999 18TH STREET, SUITE 2600
DENVER, CO 80202
PHONE: 303-297-2976
FAX: 303-297-2693

Sheet Revisions

Date:	Comments	Init.

Colorado Department of Transportation
DOT DEPARTMENT OF TRANSPORTATION
8833 South Wadsworth Court
Littleton, CO 80128
Phone: 303-972-9112 FAX: 303-972-9114
Region 6 RLB

As Constructed
No Revisions:
Revised:
Void:

FLYOVER RAMP OVER ERICKSON
DECK REINFORCING
PLAN & SECTION

Designer:	T. Johnson	Structure Numbers	F-16-WY
Detailer:	R. Artman		
Sheet Subset:	Bridge	Subset Sheets:	B10 of B26

Project No./Code
ES6 0852-103
17679
Sheet Number 271

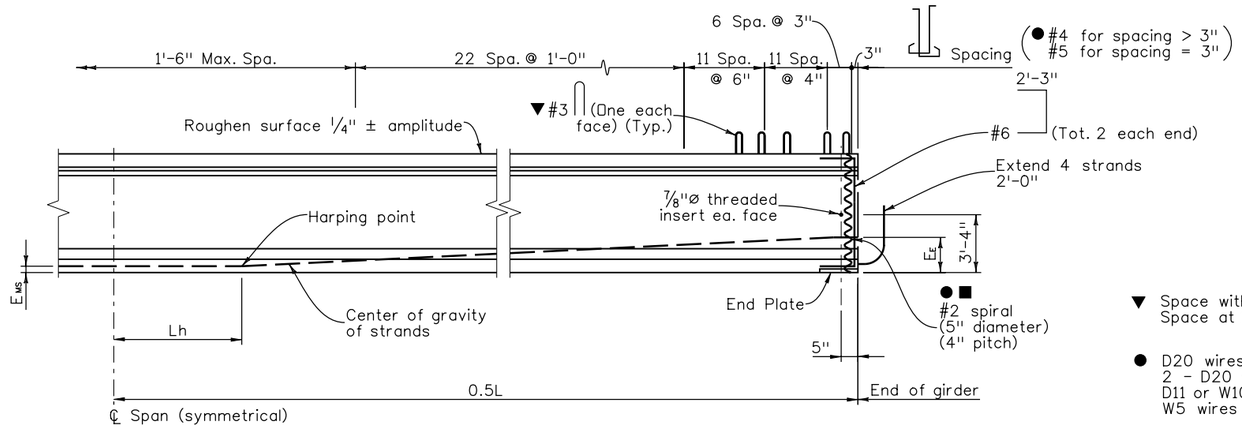

GIRDER ELEVATION

▼ Space with for stirrup spacings of 9" or more. Space at 1'-0" for stirrup spacings less than 9".

● D20 wires may be used in lieu of #4.
2 - D20 wires may be used in lieu of #5/#6.
D11 or W10.9 wires may be used in lieu of #3.
W5 wires my be used in lieu of #2.

■ The Contractor may submit an alternate cross tie arrangement, at the end of the web, for approval by the Engineer.

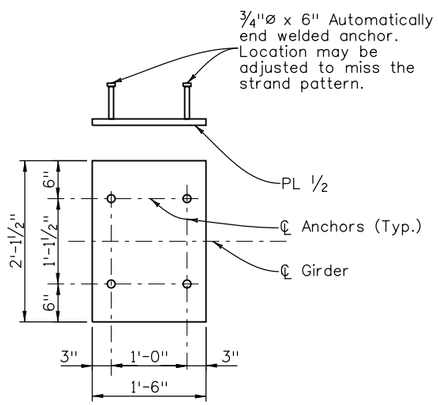

END PLATE DETAIL

Galvanize after fabrication.

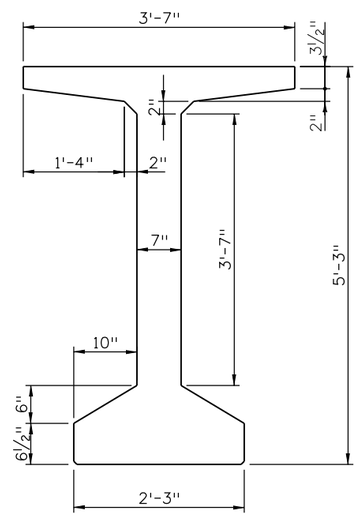

GIRDER DETAIL

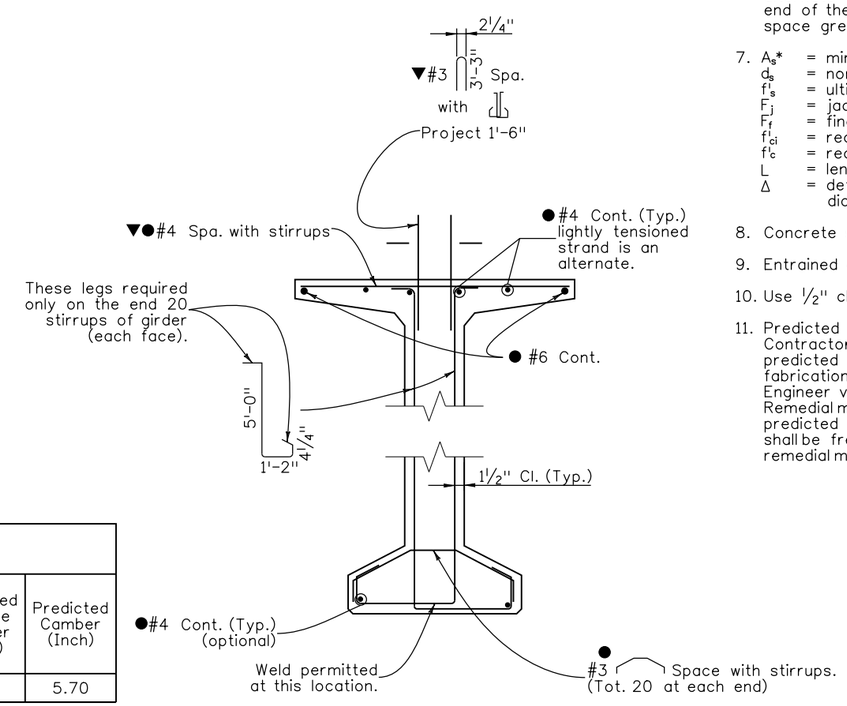

TYPICAL GIRDER SECTION

NOTES:

1. All work necessary to fabricate and install the integral parts of the girder (including the intermediate diaphragms, 7/8"Ø threaded rods, and leveling pads), as shown on the plans, shall be included in the bid price for Item No. 618, Prestressed Concrete I (BT63), with a pay unit of Feet which shall be measured by dimension L.
2. When approved by the Engineer, a minimum of tack welding will be permitted on ASTM A706 uncoated reinforcing steel.
3. Reinforcing projecting from the top of the girder and reinforcing within eight feet of an expansion device in the bridge deck shall be epoxy coated. Damaged coating on girder reinforcing need not be repaired. The minimum cover for reinforcing steel is 1".
4. At girder ends not embedded in concrete diaphragms, cut strands off 1" below the surface of the concrete and finish with an approved epoxy grout. At girder ends embedded in concrete diaphragms, cut strands to project 3", except as shown. Do not make cosmetic repairs (damage less than 1 1/2" deep) to the parts of the girders embedded in concrete.
5. Use low relaxation strands meeting the requirements of ASTM A-416 Grade 270. The minimum clear distance between groups or individual strands shall be 2.3(d_s) but not less than 1 1/4". The minimum cover for prestressing steel is 1 1/2".
6. A minimum of two harping points shall be used per girder. Harped strands shall be well distributed at the girder ends, starting within 4" of the top of the girder and distributed such that there is no space between strands greater than 1'-0" at the end of the girder. As an alternate the Contractor may place #4 ● x 10'-0" in the sides of the end of the web parallel to the harped strands such that there is no space greater than 1'-0".
7. A_s* = minimum area of the prestressing steel.
   d_s = nominal strand diameter.
   f'_s = ultimate strength of prestressing steel.
   F_j = jacking force per girder.
   F_f = final force per girder after all losses.
   f'_{ci} = required concrete strength at release of prestress force.
   f'_c = required concrete strength at 28 days of age.
   L = length of girder along the grade of the girder.
   Δ = deflection at centerline of span due to cast-in-place slab, diaphragms, asphalt, curbs, rails, and walks.
8. Concrete shall be Class PS.
9. Entrained air is not required for girder concrete.
10. Use 1/2" chamfer on all corners, except as noted.
11. Predicted camber is the camber for the girder alone at 90 days. The Contractor shall limit the camber growth to a value not to exceed the predicted camber plus 1" prior to the deck pour by weighting, scheduling fabrication, post tensioning, or other means and must report to the Engineer values of camber which exceed the predicted camber plus 1". Remedial measures, as approved by the Engineer, shall be taken if the predicted camber plus 1" is exceeded. The approved remedial measures shall be free of any adverse impact. The costs associated with all remedial measures shall be borne by the Contractor.

GIRDER SCHEDULE

Girder Type	Span No.	Girder No.	L (Feet)	Lh (Feet)	A_s* (Square Inch)	E_{ms} (Inch)	E_e (Inch)	F_j (KIPS)	F_f (KIPS)	Concrete Strength f'_{ci} (PSI)	Concrete Strength f'_c (PSI)	Δ (Inch)	Predicted Release Camber (Inch)	Predicted Camber (Inch)
BT63	1	ALL	126.125	12.6	9.114	4.67	14.0	1845.6	1555.6	7000	9000	4.67	3.22	5.70

	Design			Detail				Quantities		
	INITIAL	DATE		INITIAL	DATE			INITIAL	DATE
Designed By	AML	10/09	Detailed By	RGA	10/09	Quantities By		TRJ	10/09
Checked By	BJA	10/09	Checked By	AML	10/09	Checked By		JSM	10/09

BJAllen 9:26:24 PM M:\TRN\07-100-311-12\14679\Bridge\Drawings\Erickson Bridge\14679_Prestr_I_Girder_01.dgn

Print Date: 1/13/2010
File Name: 14679_Prestr_I_Girder_01.dgn
Horiz. Scale: 1:1 Vert. Scale: As Noted
Unit Information 0224 Unit Leader MH

WILSON & COMPANY Engineers & Architects
999 18TH STREET, SUITE 2600
DENVER, CO 80202
PHONE: 303-297-2976
FAX: 303-297-2693

Sheet Revisions

Date:	Comments	Init.

Colorado Department of Transportation
8833 South Wadsworth Court
Littleton, CO 80128
Phone: 303-972-9112 FAX: 303-972-9114
Region 6 RLB

As Constructed
No Revisions:
Revised:
Void:

FLYOVER RAMP OVER ERICKSON
BT63 GIRDER DETAILS
(1 OF 2)

Designer: A. Leifheit
Detailer: R. Artman
Sheet Subset: Bridge
Structure Numbers: F-16-WY
Subset Sheets: B11 of B26

Project No./Code
ES6 0852-103
17679
Sheet Number 272

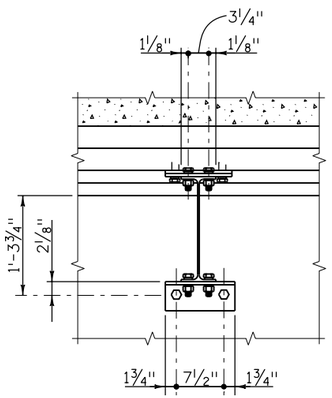

SECTION (A)

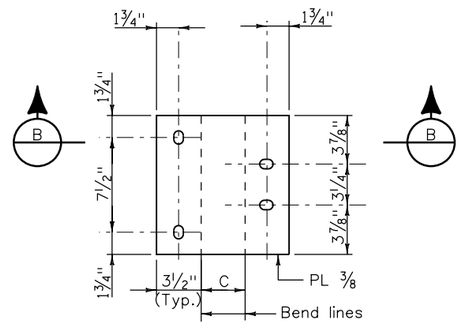

PLAN
(Before bending)

PLATE DETAIL

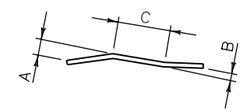

▲ SECTION (B)

NOTES:

1. All diaphragm materials, including bolts, nuts, and washers shall be galvanized. Galvanize after fabrication.
2. Bolts, nuts and lock washers may be zinc plated in lieu of being galvanized.
3. ▲ Dimensions A, B and C shall be shown on the shop drawings.
4. The Contractor is responsible for determining necessary bracing requirements and for providing adequate bracing for the specific wind and weather conditions to be encountered for each specific project.
5. When bracing or diaphragms are required, no girders shall be erected and left unbraced. The intermediate diaphragms (when used) shall be connected to the adjacent girders simultaneously with the erection of the girders.
6. Use and installation of the intermediate diaphragms shall not relieve the Contractor of full responsibility to construct the Work in a manner which provides all necessary rigidity, supports all loads imposed, and provides in the finished structure the lines and grades indicated on the plans.

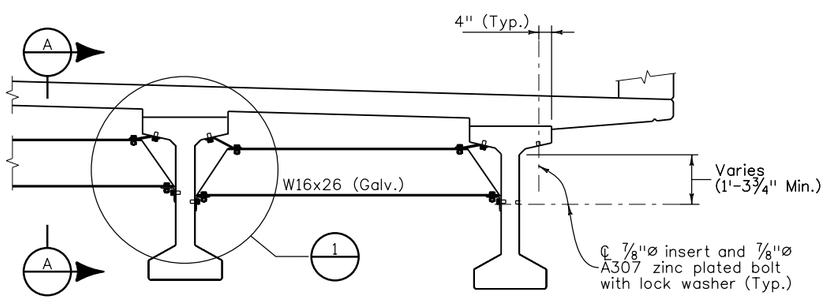

INTERMEDIATE DIAPHRAGM DETAILS

(For location of diaphragms, see Construction Layout.)

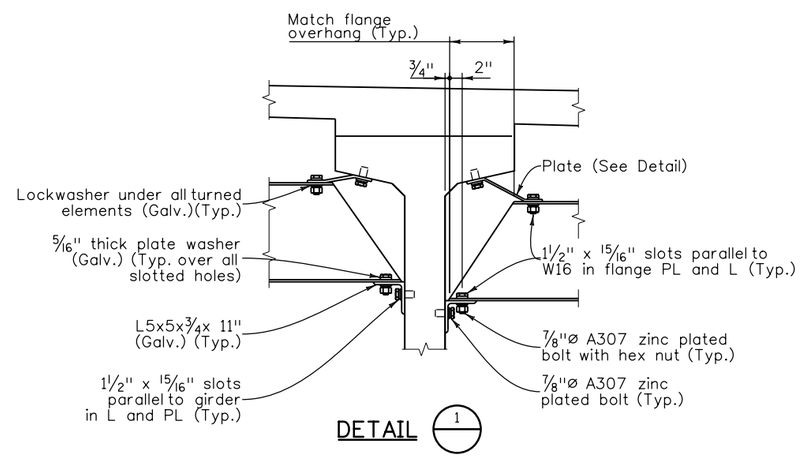

DETAIL (1)

Design				Detail				Quantities			
	INITIAL	DATE		INITIAL	DATE		INITIAL	DATE		INITIAL	DATE
Designed By	AML	10/09	Detailed By	RGA	10/09	Quantities By	TRJ	10/09			
Checked By	BJA	10/09	Checked By	BJA	10/09	Checked By	JSM	10/09			

BJAllen 9:27:17 PM M:\TRN\07-100-311-12\14679\Bridge\Drawings\Erickson Bridge\14679_Prestr_I_Girder_02.dgn

Print Date: 1/13/2010
File Name: 14679_Prestr_I_Girder_02.dgn
Horiz. Scale: 1:1 Vert. Scale: As Noted
Unit Information 0224 Unit Leader MH

WILSON & COMPANY Engineers & Architects
999 18TH STREET, SUITE 2600
DENVER, CO 80202
PHONE: 303-297-2976
FAX: 303-297-2693

Sheet Revisions		
Date:	Comments	Init.

Colorado Department of Transportation
CDOT DEPARTMENT OF TRANSPORTATION
8833 South Wadsworth Court
Littleton, CO 80128
Phone: 303-972-9112 FAX: 303-972-9114
Region 6 RLB

As Constructed
No Revisions:
Revised:
Void:

FLYOVER RAMP OVER ERICKSON
BT63 GIRDER DETAILS
(2 OF 2)

Designer:	A. Leifheit	Structure Numbers	F-16-WY
Detailer:	R. Artman		
Sheet Subset:	Bridge	Subset Sheets:	B12 of B26

Project No./Code
ES6 0852-103
17679
Sheet Number 273

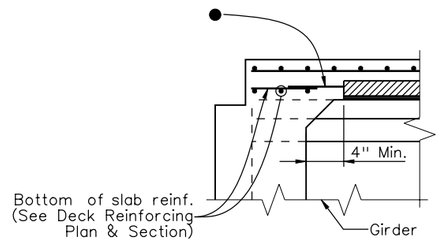

SECTION AT ABUTMENT

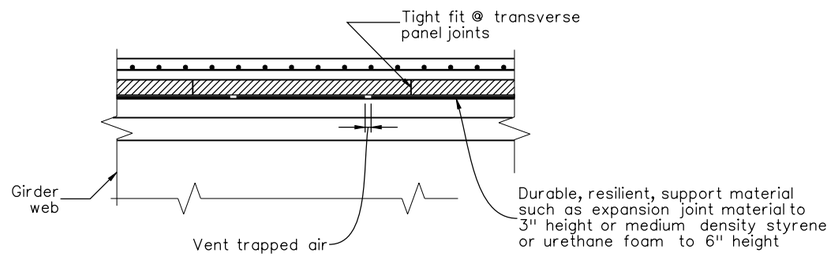

SECTION THRU TRANSVERSE PANEL JOINTS

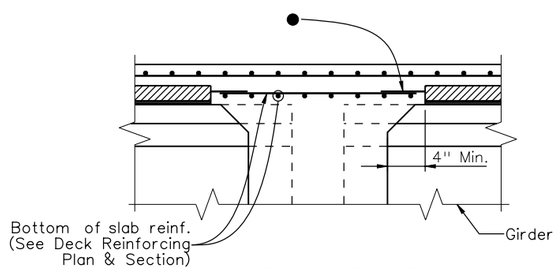

SECTION AT PIER

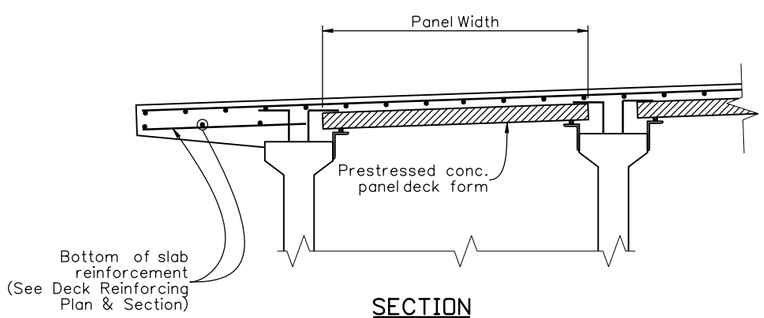

SECTION

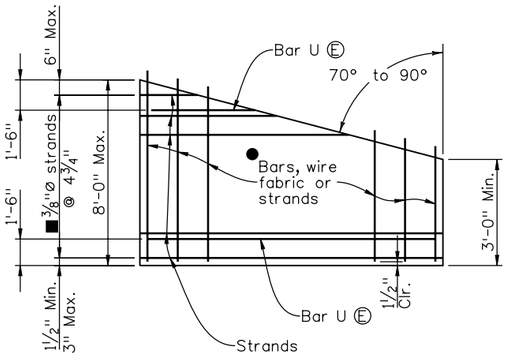

PLAN - SKEWS 70° TO 90° OPTIONAL END PANEL

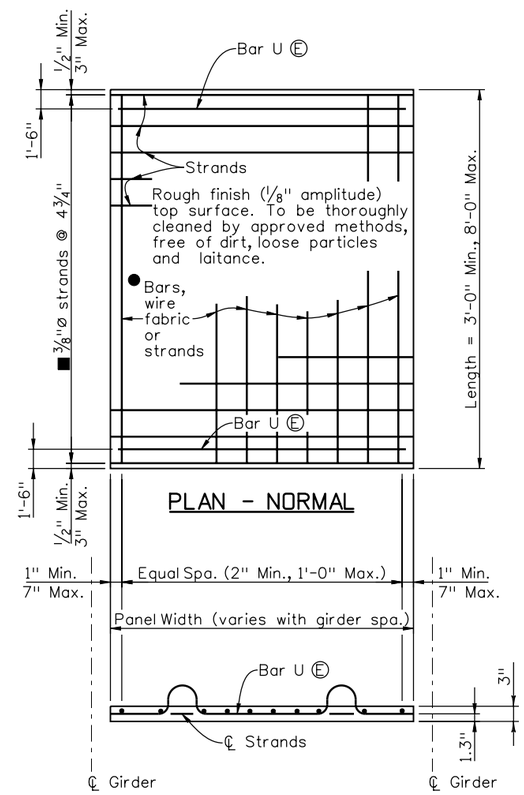

PRESTRESSED PANEL DETAILS

NOTES:

1. Sawing of panels is acceptable in areas where projecting reinforcement is not required. It is desirable to have the prestressing strands project from the panels as long as the projecting strands do not interfere with other bridge components.

● 2. Reinforcing perpendicular to strands may be deformed reinf. bars, welded wire fabric, or welded deformed bar mats, and shall be placed directly above the strands. Minimum area of reinforcing perpendicular to strands shall be 0.11 sq. in. per ft. Tensioned or untensioned strands may also be used. These individual bars or wires shall be no larger than .375" diameter. For location of longitudinal bar extensions, see sheet 2 of 2.

■ 3. May be reduced to 3/8"Ø strands at 9 1/2" when the panel width is less than 5'-7" and the design span is less than 7'-7".

4. The longitudinal reinforcing steel in the cast-in-place portion of the deck may rest directly on the panels as necessary to obtain clearances at the top of deck, unless otherwise noted.

5. Ⓔ denotes epoxy coated reinforcing.

6. The tolerance on strand placement shall not exceed ±1/4".

7. The tolerance on panel thickness shall not exceed ±1/4".

8. Concentrated construction loads shall not exceed 500 lb unless the load is distributed to less than 117 psf.

9. Total loads applied to any panel during construction shall not exceed 117 psf.

10. Bottom flexural cracks, sags greater than 0.5", or cambers greater than 0.5" will be considered evidence of mishandling, overloading, or exceeding allowable tolerances, and may be cause for rejecting panels at the Engineer's discretion.

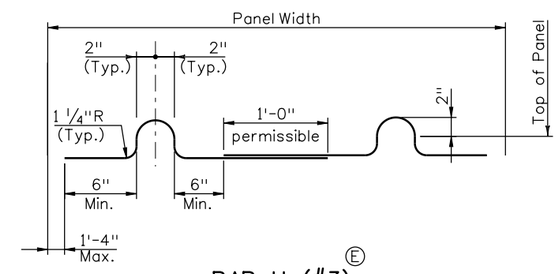

BAR U (#3) Ⓔ PRESTRESSED PANEL DETAILS

Design				Detail				Quantities		
	INITIAL	DATE		INITIAL	DATE		INITIAL	DATE
Designed By	AML	10/09	Detailed By	RGA	10/09	Quantities By	TRJ	10/09
Checked By	BJA	10/09	Checked By	BJA	10/09	Checked By	JSM	10/09

BJAllen 9:27:46 PM M:\TRN\07-100-311-12\14679\Bridge\Drawings\Erickson Bridge\14679_PrecastPanel_01.dgn

Print Date: 1/13/2010		Sheet Revisions	
File Name: 14679_PrecastPanel_01.dgn		Date:	Comments	Init.
Horiz. Scale: 1:1	Vert. Scale: As Noted			
Unit Information 0224	Unit Leader MH			

WILSON & COMPANY Engineers & Architects — 999 18TH STREET, SUITE 2600, DENVER, CO 80202, PHONE: 303-297-2976, FAX: 303-297-2693

Colorado Department of Transportation
DOT DEPARTMENT OF TRANSPORTATION
8833 South Wadsworth Court
Littleton, CO 80128
Phone: 303-972-9112 FAX: 303-972-9114
Region 6 RLB

As Constructed
No Revisions:
Revised:
Void:

FLYOVER RAMP OVER ERICKSON
PRECAST PANEL DECK FORM
(1 OF 2)

Designer:	A. Leifheit	Structure Numbers	F-16-WY
Detailer:	R. Artman		
Sheet Subset:	Bridge	Subset Sheets:	B13 of B26

Project No./Code
ES6 0852-103
17679
Sheet Number 274

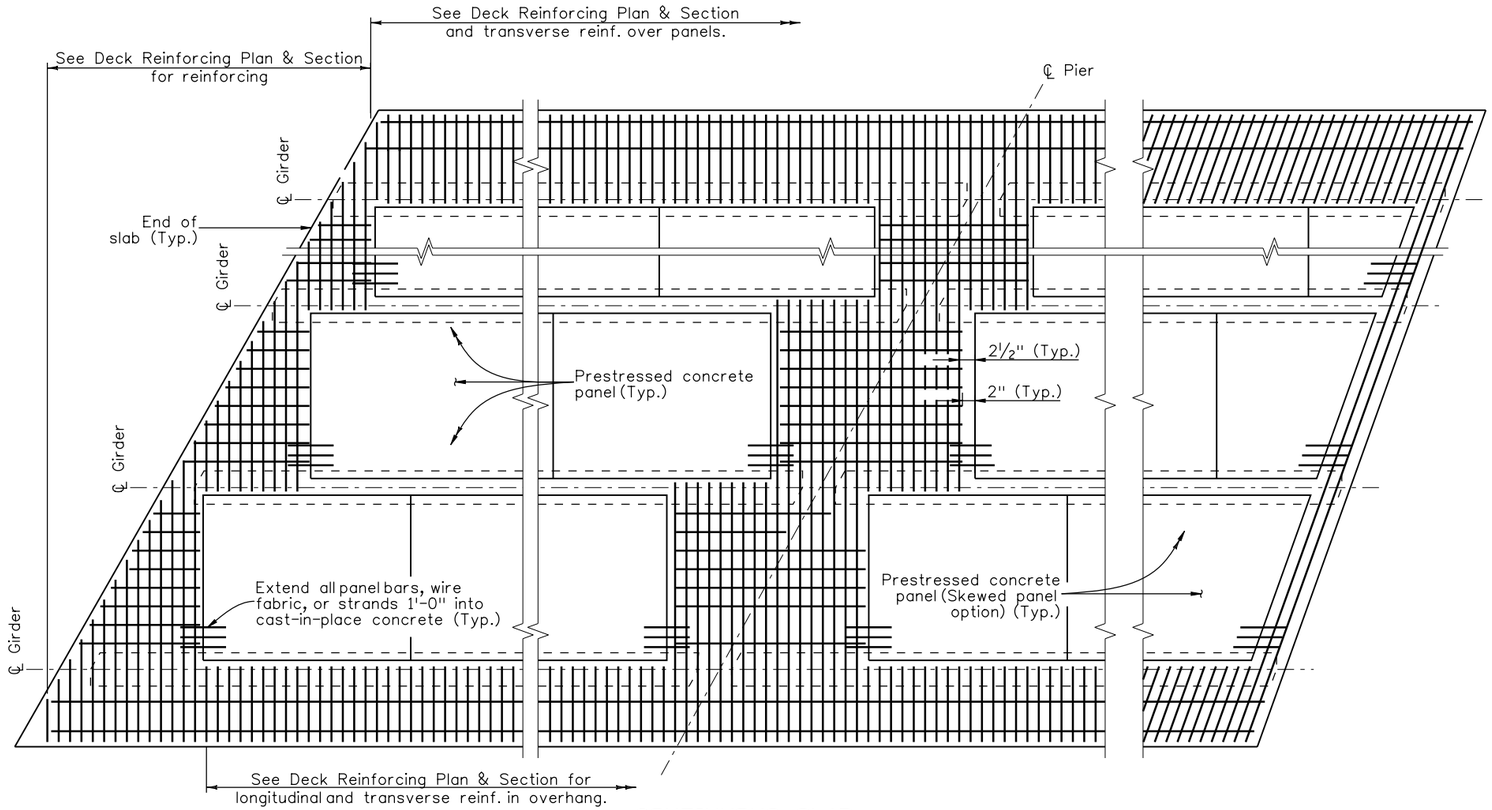

END OF SLAB
RECTANGULAR PANEL OPTION AND
SKEWS LESS THAN 70°

Rectangular panel option shall be used for skews less than 70°.

CONTINUOUS SLAB
OVER PIER

PART PLAN

END OF SLAB
SKEWED PANEL OPTION FOR
SKEWS 70° to 90°

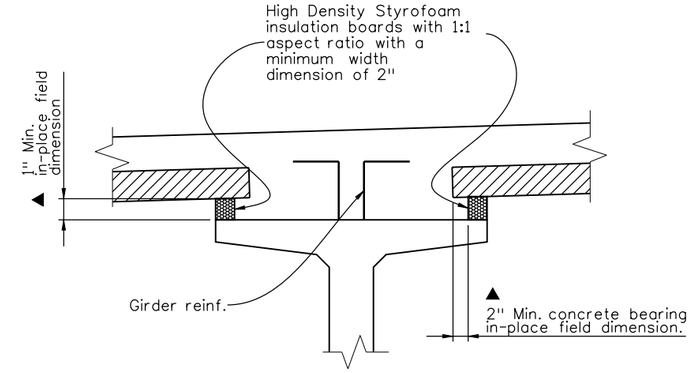

ALTERNATE SUPPORT DETAIL

NOTES:

1. Composite total slab designed for HL 93.
2. All concrete shall be Class PS with release strength f'_{ci} = 4500 psi and minimum 28 day strength f'_c = 6000 psi. Entrained air is not required for precast panel deck form concrete. The strength shall be at least 5000 psi at the time of the deck pour.
3. Use ⅜"Ø low relaxation strands meeting the requirements of ASTM A416 grade 270. Jacking force per strand (F_i) shall be at least 17.2 kips. Final force per strand (F_f) is estimated to be 14.2 kips.
4. Installation of Bar U (#3) is mandatory. All four Bar U (#3) loops shall be used simultaneously for lifting the panels.
5. Care must be taken to ensure proper cleaning of construction debris off the tops of the panels and consolidation of concrete mortar under the edges of the panels. Water, dirt or other debris on top of the panels will inhibit the bond of the cast-in-place concrete. It is also important that adequate space (▲min. 1" x 2") is provided for the concrete to fill the space under the panel as the slab concrete is placed. Panel lengths and width shall be determined by the Contractor and shown on the shop plans.
6. The Contractor is responsible for the stability of the panels on the girders. Erected panels shall be uniformly supported along the length of the panel. The Contractor is responsible for meeting the total slab thickness shown on the Deck Reinforcing Plan & Section.
7. All planes of reinforcing steel shown in the Deck Reinforcing Plan & Section are required for areas not formed with precast panels.

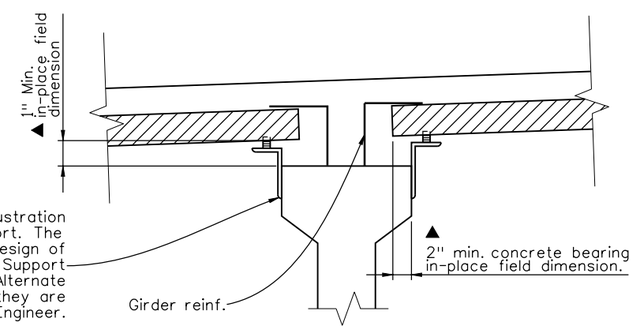

The angle and resilient material are shown for illustration and show only one potential method of support. The Contractor is responsible for the selection and design of the panel support and attachment to the girder. Support details shall be shown on the shop plans. Alternate methods for support may be used, provided they are shown on the shop plans and approved by the Engineer.

SUPPORT DETAIL

Design	INITIAL	DATE	Detail	INITIAL	DATE	Quantities	INITIAL	DATE
Designed By	AML	10/09	Detailed By	RGA	10/09	Quantities By	TRJ	10/09
Checked By	BJA	10/09	Checked By	BJA	10/09	Checked By	JSM	10/09

BJAllen 9:28:14 PM M:\TRN\07-100-311-12\14679\Bridge\Drawings\Erickson Bridge\14679_PrecastPanel_02.dgn

Print Date: 1/13/2010
File Name: 14679_PrecastPanel_02.dgn
Horiz. Scale: 1:1 Vert. Scale: As Noted
Unit Information 0224 Unit Leader MH

WILSON & COMPANY Engineers & Architects
999 18TH STREET, SUITE 2600
DENVER, CO 80202
PHONE: 303-297-2976
FAX: 303-297-2693

Sheet Revisions		
Date:	Comments	Init.

Colorado Department of Transportation
8833 South Wadsworth Court
Littleton, CO 80128
Phone: 303-972-9112 FAX: 303-972-9114
Region 6 RLB

As Constructed
No Revisions:
Revised:
Void:

FLYOVER RAMP OVER ERICKSON
PRECAST PANEL DECK FORM
(2 OF 2)

Designer:	A. Leifheit	Structure Numbers	F-16-WY
Detailer:	R. Artman		
Sheet Subset:	Bridge	Subset Sheets:	B14 of B26

Project No./Code
ES6 0852-103
17679
Sheet Number 275

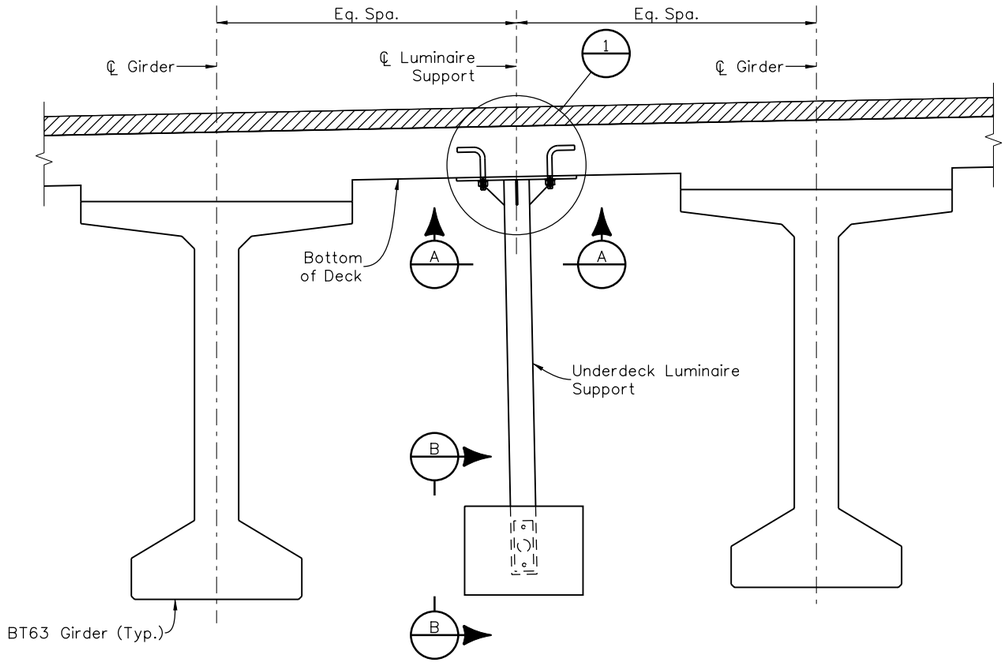

UNDER DECK LIGHTING ELEVATION

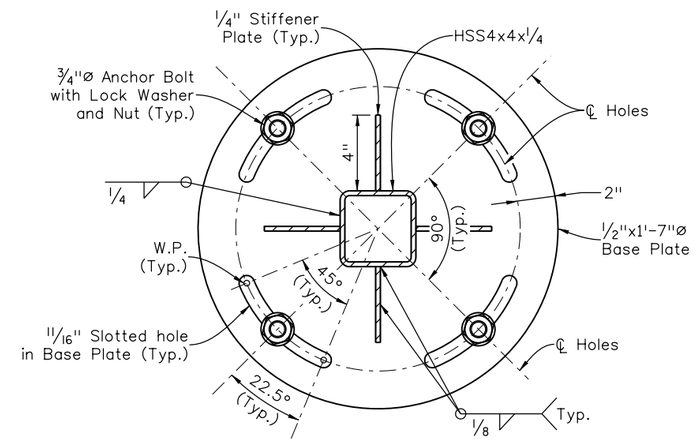

SECTION A

NOTES:

1. See Lighting & Electrical Plans for additional details.
2. All Steel Plates for Underdeck Luminaire Support shall be AASHTO M270 Grade 36 (Min.). HSS sections shall be ASTM A500 Grade B.
3. All bolts, nuts and washers shall be galvanized. Underdeck Luminaire Support shall be galvanized after fabrication.
4. Contractor shall submit an alternate design for anchorage of Underdeck Luminaire Support if Precast Panel Deck forms are used.
5. Adjust anchor bolt locations as required to clear bridge deck reinforcment.
6. Luminaire Support shall not be paid for seperately, but shall be included in the cost of Item 613, 1 Inch Electrical Conduit.

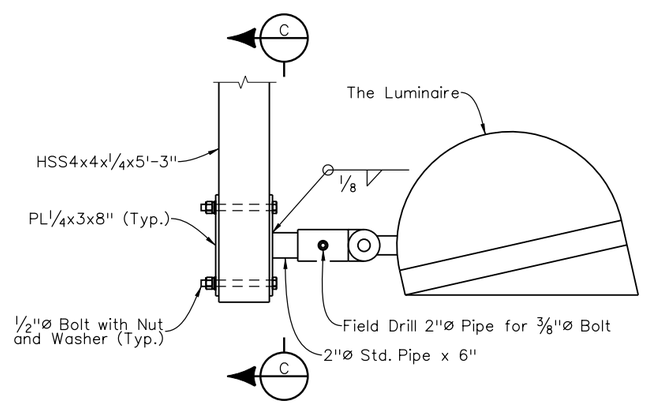

VIEW B

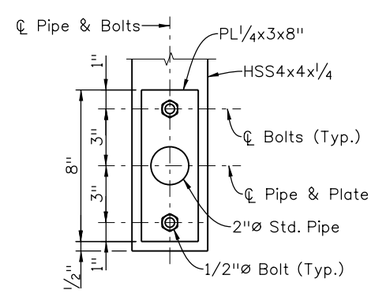

SECTION C

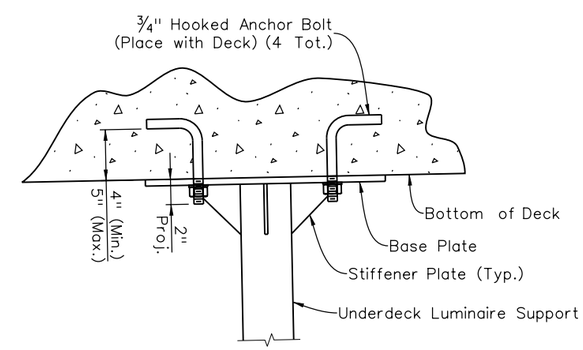

DETAIL 1

Design			Detail			Quantities		
	INITIAL	DATE		INITIAL	DATE		INITIAL	DATE
Designed By	BJA	10/09	Detailed By	RGA	10/09	Quantities By	TRJ	10/09
Checked By	MJN	10/09	Checked By	MJN	10/09	Checked By	JSM	10/09

BJAllen 9:28:58 PM M:\TRN\07-100-311-12\14679\Bridge\Drawings\Erickson Bridge\14679_LightingDet_01.dgn

Print Date: 1/13/2010	Sheet Revisions	Colorado Department of Transportation	As Constructed
File Name: 14679_LightingDet_01.dgn	Date: / Comments / Init.	8833 South Wadsworth Court, Littleton, CO 80128, Phone: 303-972-9112 FAX: 303-972-9114	No Revisions:
Horiz. Scale: 1:1 Vert. Scale: As Noted		Region 6 RLB	Revised:
Unit Information 0224 Unit Leader MH			Void:
WILSON & COMPANY Engineers & Architects, 999 16TH STREET, SUITE 2600, DENVER, CO 80202, PHONE: 303-297-2976, FAX: 303-297-2693			

FLYOVER RAMP OVER ERICKSON LIGHTING DETAILS			Project No./Code
			ES6 0852-103
Designer: B. Allen	Structure Numbers	F-16-WY	17679
Detailer: R. Artman			
Sheet Subset: Bridge	Subset Sheets: B15 of B26		Sheet Number 276

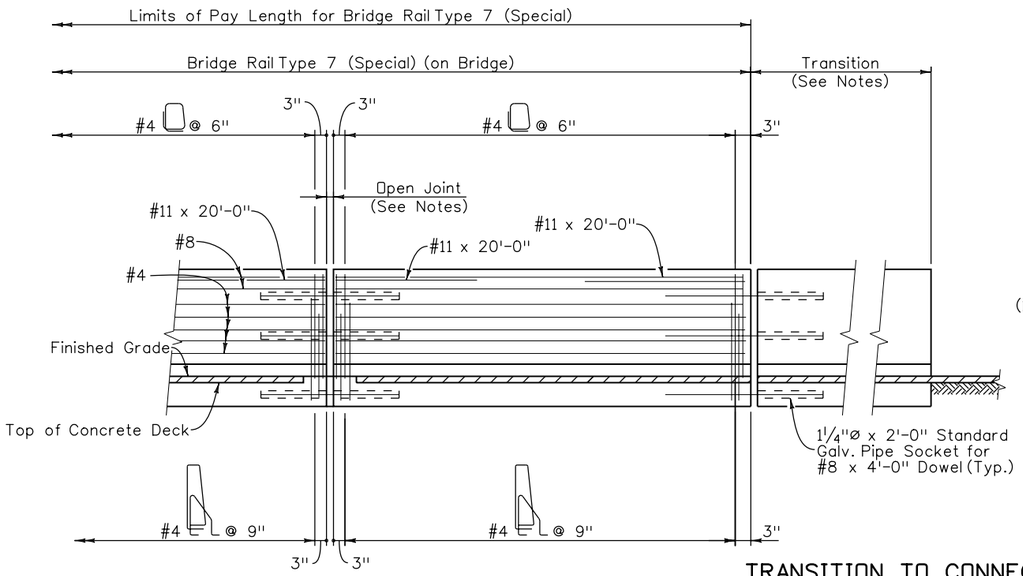

ELEVATION
(North Rail)

TRANSITION TO CONNECT BRIDGE RAIL TYPE 7 (SPECIAL) TO GUARD RAIL

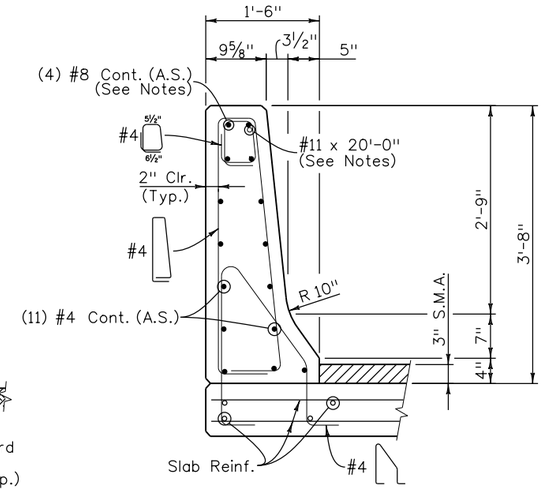

TYPICAL SECTION
(North Rail)

NOTES:

1. All bridge rail concrete shall be Class D (Bridge), f'c = 4,500 psi.
2. Longitudinal reinforcement shall stop at all expansion joints.
3. Bridge rail shall be constructed plumb.
4. Concrete and reinforcing steel shall conform to the requirements of Sections 601 and 602 of the Standard Specifications. Payment will be made under Item 606, Bridge Rail Type 7 (Special).
5. The surface of the rail shall be tested with a 10 foot straight edge laid along the surface in the longitudinal direction. Deviation of the concrete surface from the straight edge shall be less than ¼" plus allowance for roadway horizontal and vertical curvature, if any.
6. Provide open joint in Bridge Rail to match location and width of any joint in the supporting slab. See Slab Joint Details for treatment of any Expansion Devices or joint sealants at the Bridge Rail.
7. See Roadway Plans for transition to Guardrail Style CA (Special).
8. See Lignting Plans for conduit locations and quantities.
9. In-barrier LED lights shall be located a minimum of 20'-0" from the edge of a drain, the end of rail, or an open joint.
10. #8 bars shall be mechanically spliced to maintain clearances. Mechanical splices shall be included in the work.
11. #11 x 20'-0" are required at the end of rail and adjacent to any open joint.
12. Rotate hooks and field bend bars to maintain clearances.

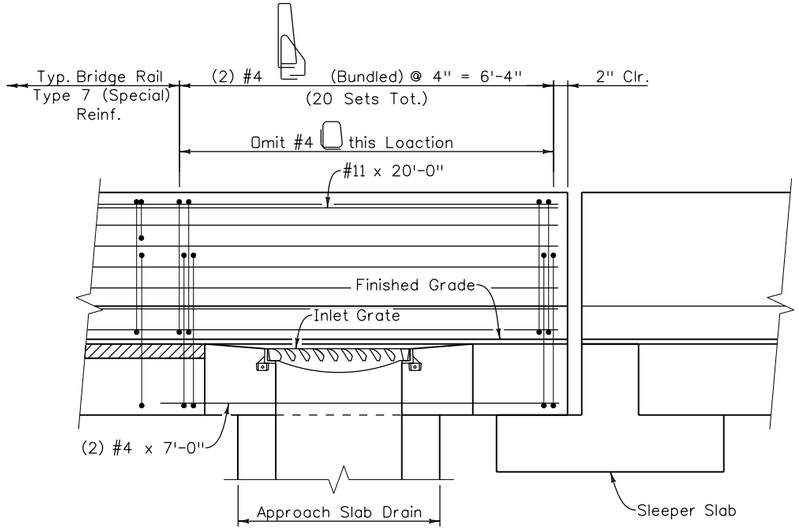

BRIDGE RAIL ELEVATION AT APPROACH SLAB DRAIN

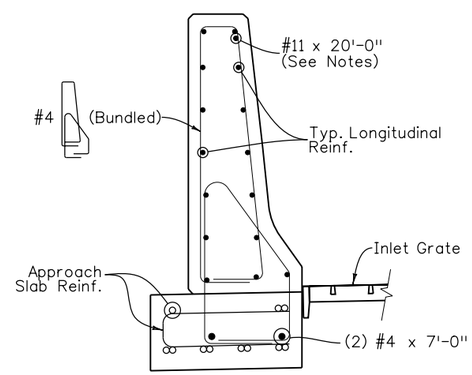

SECTION AT APPROACH SLAB DRAIN

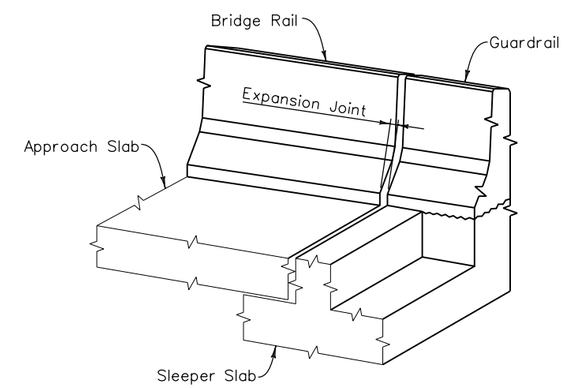

ISOMETRIC VIEW

Quantities		
	INITIAL	DATE
Quantities By	TRJ	10/09
Checked By	JSM	10/09

Detail		
	INITIAL	DATE
Detailed By	RGA	10/09
Checked By	AML	10/09

Design		
	INITIAL	DATE
Designed By	MMM	10/09
Checked By	AML	10/09

BJAllen 10:09:47 AM M:\TRN\07-100-311-12\14679\Bridge\Drawings\Erickson Bridge\14679_BridgeRailType7(Special)_01.dgn

Print Date: 1/14/2010
File Name: 14679_BridgeRailType7(Special)_01.dgn
Horiz. Scale: 1:1 Vert. Scale: As Noted
Unit Information 0224 Unit Leader MH

WILSON & COMPANY Engineers & Architects
999 18TH STREET, SUITE 2600
DENVER, CO 80202
PHONE: 303-297-2976
FAX: 303-297-2693

Sheet Revisions		
Date:	Comments	Init.

Colorado Department of Transportation
CDOT DEPARTMENT OF TRANSPORTATION
8833 South Wadsworth Court
Littleton, CO 80128
Phone: 303-972-9112 FAX: 303-972-9114
Region 6 RLB

As Constructed
No Revisions:
Revised:
Void:

FLYOVER RAMP OVER ERICKSON
BRIDGE RAIL TYPE 7 (SPECIAL)
(1 OF 2)

Designer:	M. McMullen	Structure Numbers	F-16-WY
Detailer:	R. Artman		
Sheet Subset:	Bridge	Subset Sheets:	B16 of B26

Project No./Code
ES6 0852-103
17679
Sheet Number 277

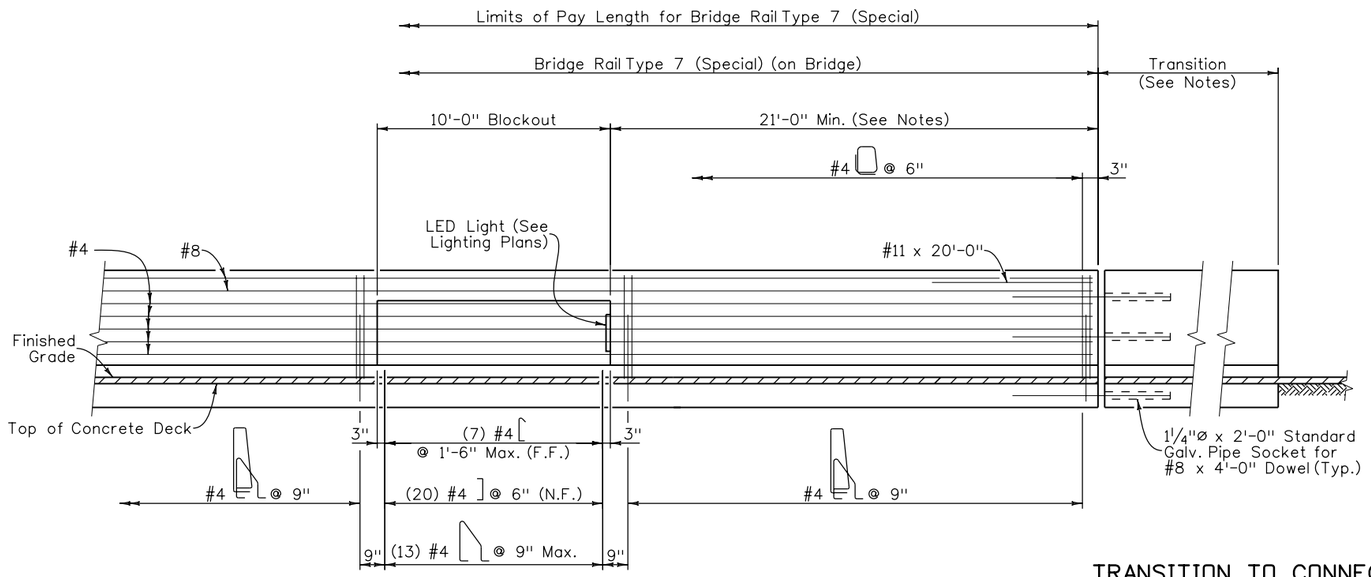

ELEVATION

(South Rail)

TRANSITION TO CONNECT BRIDGE RAIL TYPE 7 (Special) TO GUARD RAIL

NOTES:

1. All bridge rail concrete shall be Class D (Bridge), f'c = 4,500 psi.
2. Longitudinal reinforcement shall stop at all expansion joints.
3. Bridge rail shall be constructed plumb.
4. Concrete and reinforcing steel shall conform to the requirements of Sections 601 and 602 of the Standard Specifications. Payment will be made under Item 606, Bridge Rail Type 7 (Special).
5. The surface of the rail shall be tested with a 10 foot straight edge laid along the surface in the longitudinal direction. Deviation of the concrete surface from the straight edge shall be less than ¼" plus allowance for roadway horizontal and vertical curvature, if any.
6. Provide open joint in Bridge Rail to match location and width of any joint in the supporting slab. See Slab Joint Details for treatment of any Expansion Devices or joint sealants at the Bridge Rail.
7. See Roadway Plans for transition to Guardrail Style CA (Special).
8. See Lignting Plans for conduit locations and quantities.
9. In-barrier LED lights shall be located a minimum of 21'-0" from the edge of a drain, the end of rail, or an open joint.
10. #8 bars shall be mechanically spliced to maintain clearances. Mechanical splices shall be included in the work.
11. #11 x 20'-0" are required at the end of rail and adjacent to any open joint.
12. Rotate hooks and field bend bars to maintain clearances.

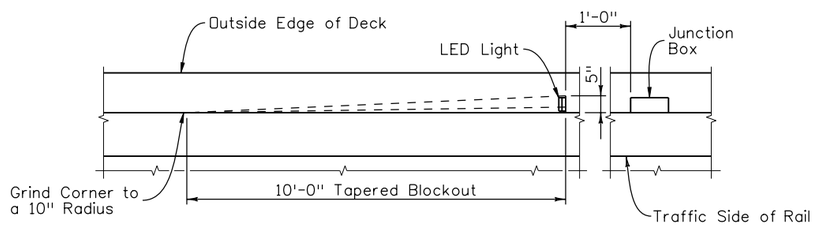

PLAN

(South Rail at Blockout)

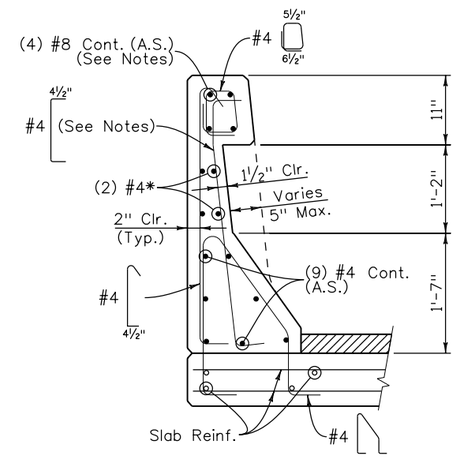

TYPICAL SECTION

(South Rail at Blockout and Taper)

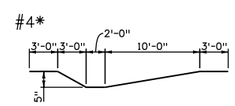

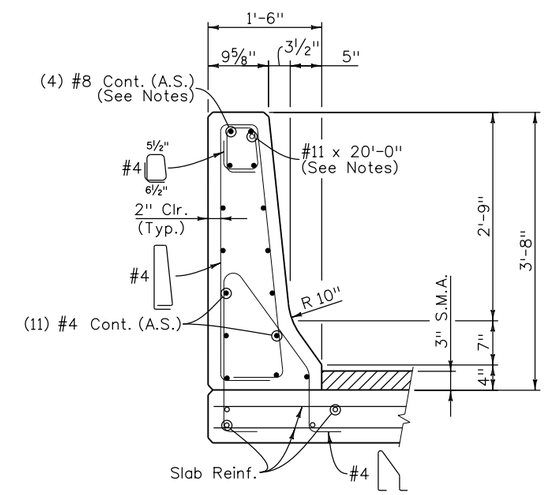

TYPICAL SECTION

(South Rail)

Design				Detail				Quantities			
	INITIAL	DATE		INITIAL	DATE			INITIAL	DATE		
Designed By	MMM	10/09	Detailed By	RGA	10/09	Quantities By	TRJ	10/09			
Checked By	AML	10/09	Checked By	AML	10/09	Checked By	JSM	10/09			

BJAllen 10:11:31 AM M:\TRN\07-100-311-12\14679\Bridge\Drawings\Erickson Bridge\14679_BridgeRailType7(Special)_02.dgn

Print Date: 1/14/2010
File Name: 14679_BridgeRailType7(Special)_02.dgn
Horiz. Scale: 1:1 Vert. Scale: As Noted
Unit Information 0224 Unit Leader MH

WILSON & COMPANY Engineers & Architects
999 18TH STREET, SUITE 2600
DENVER, CO 80202
PHONE: 303-297-2976
FAX: 303-297-2693

Sheet Revisions		
Date:	Comments	Init.

Colorado Department of Transportation
DOT DEPARTMENT OF TRANSPORTATION
8833 South Wadsworth Court
Littleton, CO 80128
Phone: 303-972-9112 FAX: 303-972-9114
Region 6 RLB

As Constructed
No Revisions:
Revised:
Void:

FLYOVER RAMP OVER ERICKSON
BRIDGE RAIL TYPE 7 (SPECIAL)
(2 OF 2)

Designer: M. McMullen
Detailer: R. Artman
Structure Numbers F-16-WY
Sheet Subset: Bridge
Subset Sheets: B17 of B26

Project No./Code
ES6 0852-103
17679
Sheet Number 278

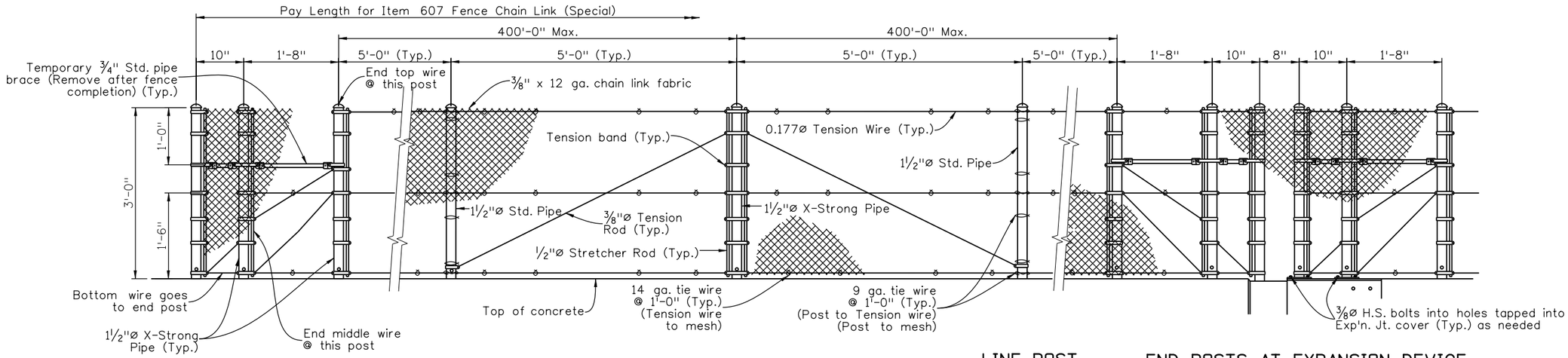

END POSTS

LINE POST
(See Note 2)

BRACE POST
(Spa. @ 400' max.)

LINE POST
(See Note 2)

END POSTS AT EXPANSION DEVICE

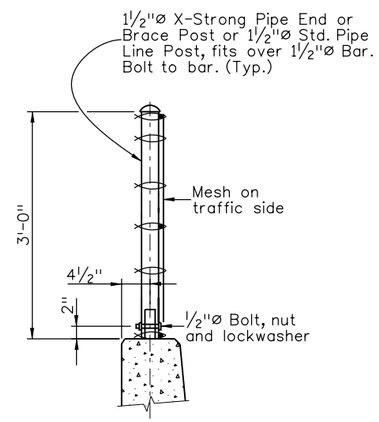

TYPICAL SECTION

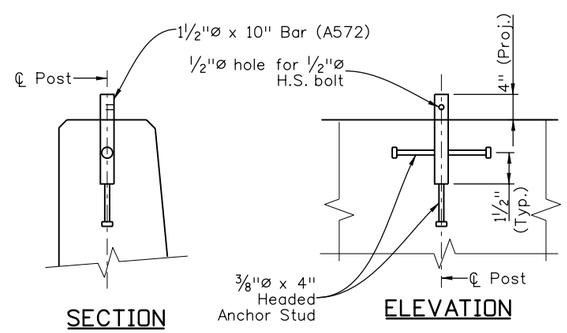

SECTION

ELEVATION

ANCHORAGE DETAIL

NOTES:

1. Anchorage assembly shall be galvanized after fabrication. Vinyl Coating is required, the fence assembly shall be Galvanized and Vinyl Coated after fabrication. Anchorages shall only be galvanized after fabrication.
2. Line post spacing shall be adjusted such that the centerline of line posts are 2'-6" each side of the centerline of an LED barrier mounted luminaire.
3. Tension Rods and Wires shall have turnbuckles.
4. Post shall be vertical.
5. Pipe shall conform to ASTM A53 Type E or S, Grade B.

DESIGN DATA

Test Tension = 5400 lbs
Test with: Max Midbay deflection = 1¼" for Lateral Load of 160 lbs. on 1 ft².
1'-6" up @ center of bay.

Live Load: wind load = 32 psf
or snow impact load = 96 plf @ 1'-6" up

Structural Steel: Pipe f_y = 35,000 psi
ASTM A572 (GR 50) f_y = 50,000 psi

Standard Color Vinyl Coatings over Galvanized Wire	Munsell Color System No. (as per ASTM)
Black	1.8PB 1.26/0.5

Design			Detail			Quantities		
	INITIAL	DATE		INITIAL	DATE		INITIAL	DATE
Designed By	AML	10/09	Detailed By	RGA	10/09	Quantities By	TRJ	10/09
Checked By	BJA	10/09	Checked By	BJA	10/09	Checked By	JSM	10/09

BJAllen 10:12:26 AM M:\TRN\07-100-311-12\14679\Bridge\Drawings\Erickson Bridge\14679_FenceDet_01.dgn

Print Date: 1/14/2010			
File Name: 14679_FenceDet_01.dgn			
Horiz. Scale: 1:1	Vert. Scale: As Noted		
Unit Information 0224	Unit Leader MH		

WILSON & COMPANY Engineers & Architects
999 18TH STREET, SUITE 2600
DENVER, CO 80202
PHONE: 303-297-2976
FAX: 303-297-2693

Sheet Revisions

Date:	Comments	Init.

Colorado Department of Transportation
DOT DEPARTMENT OF TRANSPORTATION
8833 South Wadsworth Court
Littleton, CO 80128
Phone: 303-972-9112 FAX: 303-972-9114
Region 6 RLB

As Constructed
No Revisions:
Revised:
Void:

FLYOVER RAMP OVER ERICKSON
FENCE CHAIN LINK (SPECIAL)
(36 INCH SPLASH GUARD)

Designer:	A. Leifheit	Structure Numbers	F-16-WY
Detailer:	R. Artman		
Sheet Subset:	Bridge	Subset Sheets:	B18 of B26

Project No./Code
ES6 0852-103
17679
Sheet Number 279

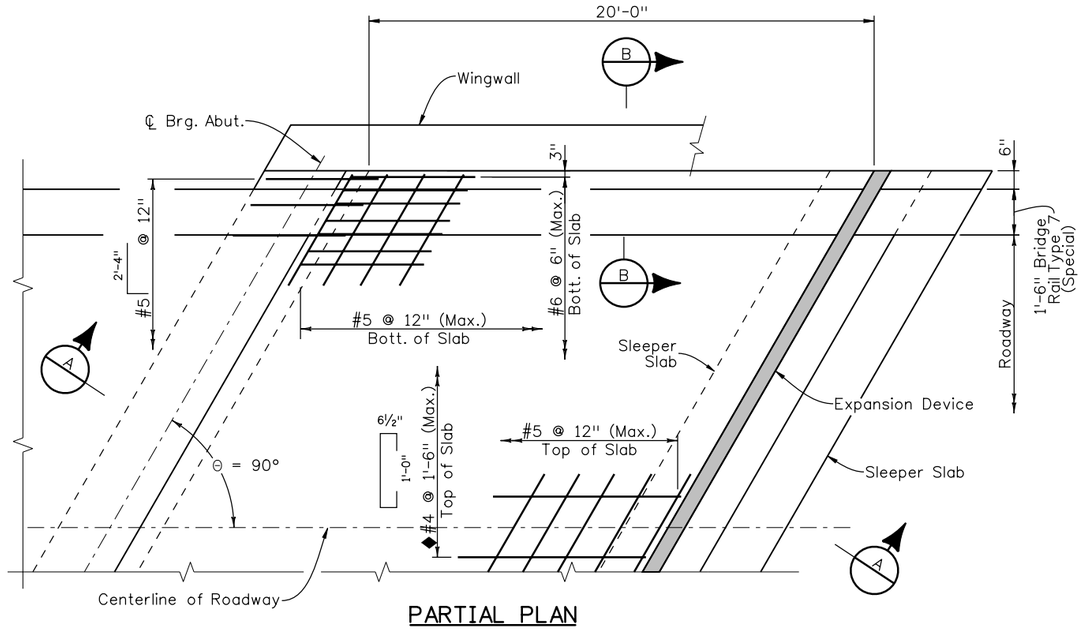

PARTIAL PLAN

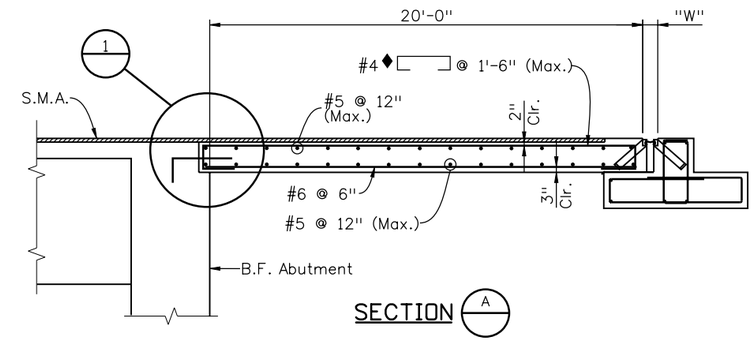

SECTION A

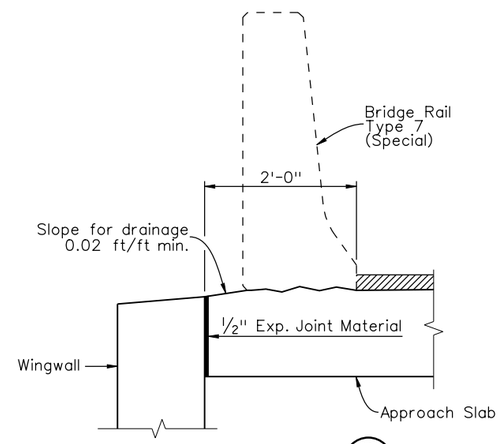

SECTION B

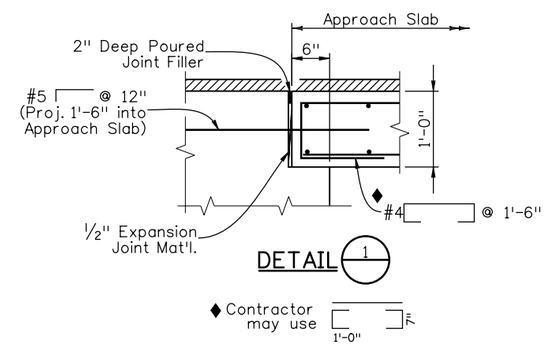

DETAIL 1

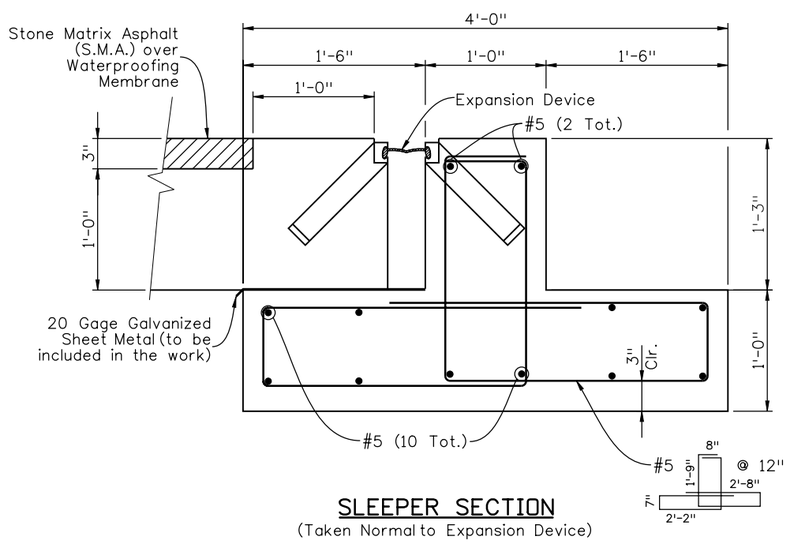

SLEEPER SECTION
(Taken Normal to Expansion Device)

NOTES:

1. Concrete Class D (Bridge) shall be used for approach slabs.
2. ½" expansion joint material shall meet AASHTO Specification M213.
3. For expansion device details and dimension "W", see Sheet B20.
4. For curb and rail details see Sheets B16 and B17.
5. Approach slab concrete shall be cured in accordance with the requirements for bridge deck concrete in Subsection 601 of the Standard Specifications.

Design		INITIAL	DATE
	Designed By	BJA	10/09
	Checked By	MJN	10/09

Detail		INITIAL	DATE
	Detailed By	RGA	10/09
	Checked By	MJN	10/09

Quantities		INITIAL	DATE
	Quantities By	TRJ	10/09
	Checked By	JSM	10/09

BJAllen 10:14:19 AM M:\TRN\07-100-311-12\14679\Bridge\Drawings\Erickson Bridge\14679_ApproachSlabDet_01.dgn

Print Date: 1/14/2010			
File Name: 14679_ApproachSlabDet_01.dgn			
Horiz. Scale: 1:1	Vert. Scale: As Noted		
Unit Information 0224	Unit Leader MH		

WILSON & COMPANY Engineers & Architects
999 18TH STREET, SUITE 2600
DENVER, CO 80202
PHONE: 303-297-2976
FAX: 303-297-2993

Sheet Revisions

Date:	Comments	Init.

Colorado Department of Transportation
8833 South Wadsworth Court
Littleton, CO 80128
Phone: 303-972-9112 FAX: 303-972-9114
Region 6 RLB

As Constructed	
No Revisions:	
Revised:	
Void:	

FLYOVER RAMP OVER ERICKSON
APPROACH SLAB DETAILS (1 OF 2)

Designer:	B. Allen	Structure Numbers	F-16-WY
Detailer:	R. Artman		
Sheet Subset:	Bridge	Subset Sheets:	B19 of B26

Project No./Code	
ES6 0852-103	
17679	
Sheet Number	280

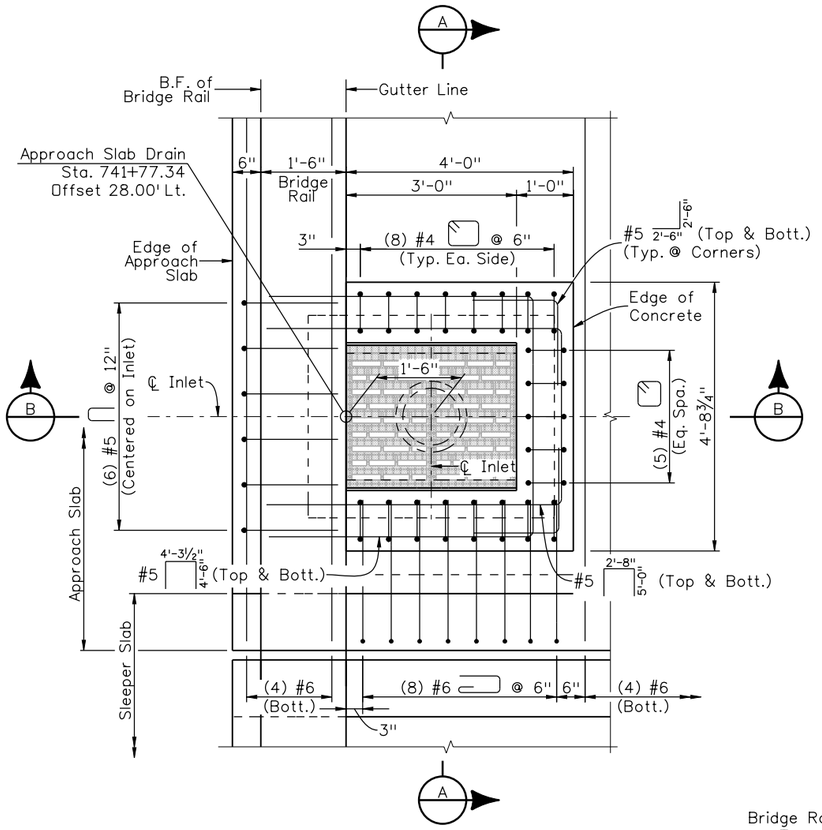

PLAN AT APPROACH SLAB DRAIN

(Typ. Approach Slab Reinf. not shown for clarity)

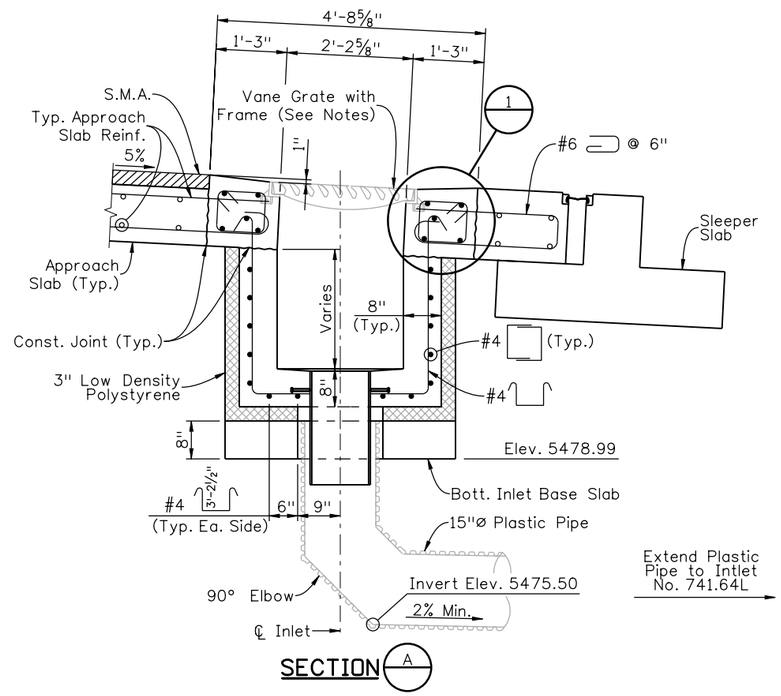

SECTION A

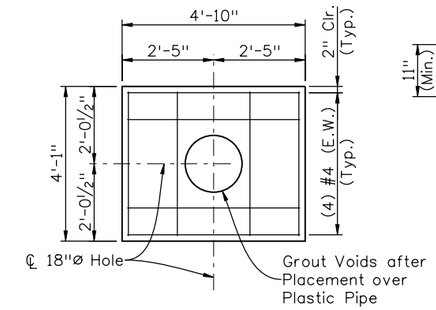

INLET BASE SLAB DETAIL

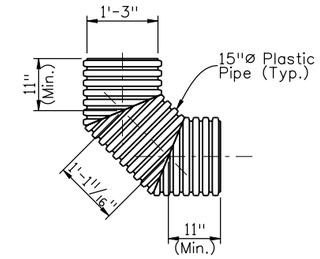

90° ELBOW DETAIL

NOTES:

1. Cutting of approach slab reinforcement will not be allowed.
2. Grate to be installed during construction of inlet with the vane grate bolted in place to the frame. The cost of the grate, grate frame, expanded polystyrene, plastic pipe, elbows, steel pipe, galvanizing, and other miscellaneous items required to construct inlet shall be included in the cost of the work. Concrete (Class D), reinforcement, and anchors will not be measured but will be paid for under Item No. 604-25000, Vane Grate Inlet (Special).
3. Plastic pipe shall conform to the requirements of AASHTO M294, Type S. Plastic pipe shall be joined by watertight couplings as recommended by the Pipe Supplier or as approved. All joints shall be mechanically restrained to prevent separation.
4. Inlet Box and Base Slab may be cast-in-place or pre-cast.
5. See Standard Plan No. M-604-25 for additional details.

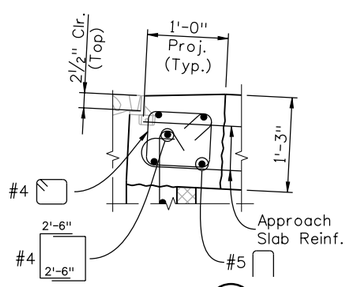

DETAIL 1

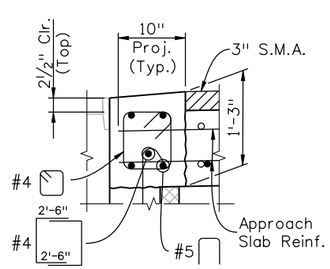

DETAIL 2

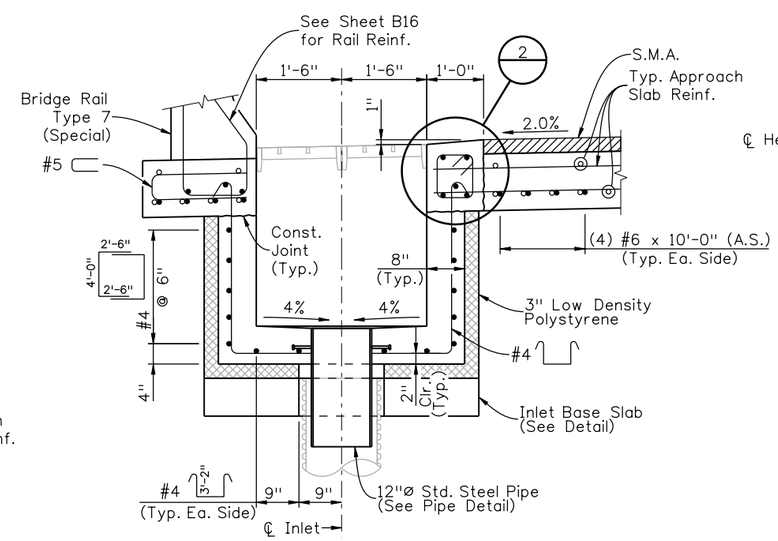

SECTION B

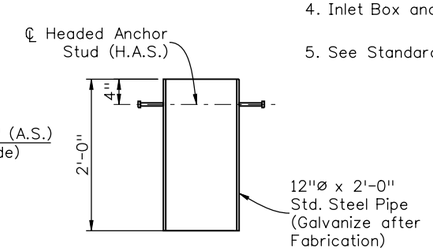

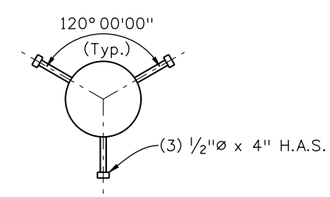

PIPE DETAIL

Design				Detail				Quantities		
	INITIAL	DATE		INITIAL	DATE		INITIAL	DATE
Designed By	BJA	10/09	Detailed By	RGA	10/09	Quantities By	TRJ	10/09
Checked By	MJN	10/09	Checked By	MJN	10/09	Checked By	JSM	10/09

BJAllen 10:15:07 AM M:\TRN\07-100-311-12\14679\Bridge\Drawings\Erickson Bridge\14679_ApproachSlabDet_02.dgn

Print Date: 1/14/2010	Sheet Revisions	Colorado Department of Transportation	As Constructed
File Name: 14679_ApproachSlabDet_02.dgn	Date: / Comments / Init.	8833 South Wadsworth Court, Littleton, CO 80128, Phone: 303-972-9112 FAX: 303-972-9114	No Revisions:
Horiz. Scale: 1:1 Vert. Scale: As Noted		Region 6 RLB	Revised:
Unit Information 0224 Unit Leader MH			Void:

WILSON & COMPANY Engineers & Architects, 999 18TH STREET, SUITE 2800, DENVER, CO 80202, PHONE: 303-297-2976, FAX: 303-297-2663

FLYOVER RAMP OVER ERICKSON APPROACH SLAB DETAILS (2 OF 2)				Project No./Code
	Designer: B. Allen	Structure Numbers	F-16-WY	ES6 0852-103
	Detailer: R. Artman			17679
	Sheet Subset: Bridge	Subset Sheets: B20 of B26		Sheet Number 281

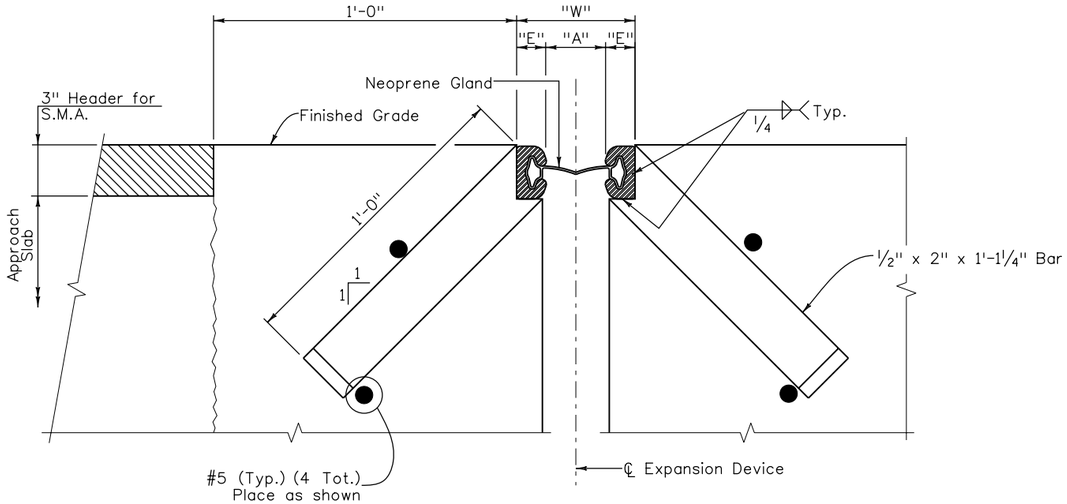

SECTION THRU STRIP SEAL BRIDGE EXPANSION DEVICE

Section taken perpendicular to ℄ Expansion Device

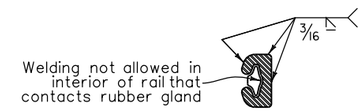

RAIL FIELD SPLICE DETAIL

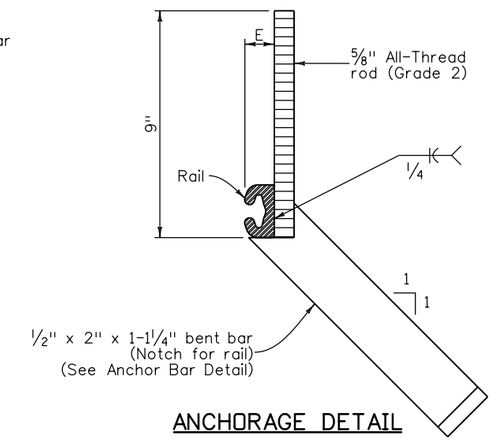

ANCHORAGE DETAIL

NOTES:

1. The expansion device shall be installed on grade, parallel to the slope and grade of the deck.
2. After the concrete has attained initial set, the attachments used to hold the expansion device assembly in it's proper position shall be removed.
3. Do not paint steel surfaces in contact with either concrete or seal.
4. "W" and "E" dimensions are dependent upon the particular expansion device supplied, and shall be shown on the working drawings.
5. See table for dimensions "A" and "W"; interpolate as needed. Do not install the gland until dimension "A" has opened up to at least 1 1/2". Use section 518.10(b) in the standard specifications to determine the structure temperature.
6. The neoprene gland shall be installed in one piece in accordance with section 518 of the standard specifications.
7. See section 518 in the standard specifications for water tight integrity testing requirements.
8. Set elevations at top of header and sleeper stem with the grade projection scheme.
9. Steel for expansion device rails and anchor bars shall be AASHTO M270, Grade 36.

ACCEPTABLE EXPANSION DEVICE ALTERNATES

- D.S. Brown A2R400-SSA2
- WABO SE400 Type A
- E-poxy Engineered Materials S400-A Strip Seal

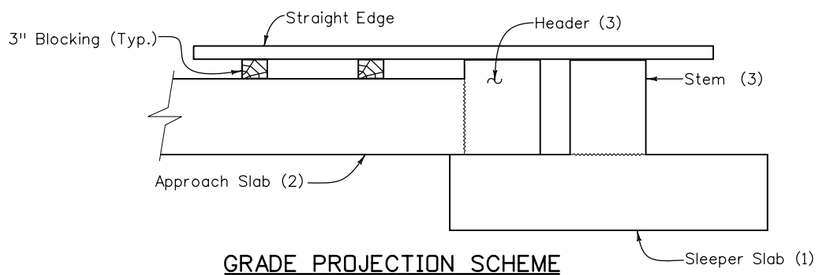

GRADE PROJECTION SCHEME

(Numbers in parenthesis refer to first, second and third concrete pours)

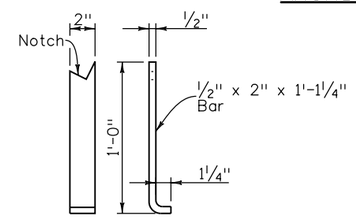

TYPICAL ANCHOR BAR DETAIL

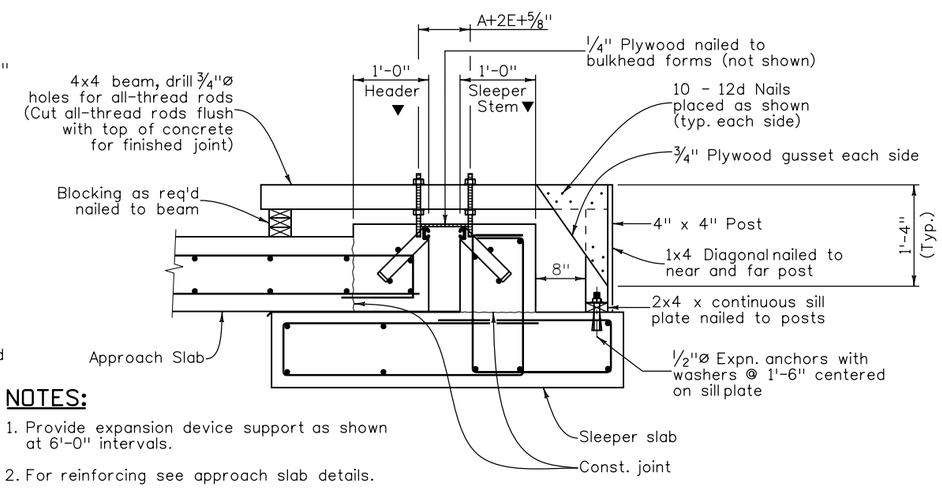

EXPANSION JOINT VARIABLES

Structure Temperature	"A"	"W" *
0° F	1 5/8"	4 1/8"
10° F	1 9/16"	4 1/16"
20° F	1 1/2"	4"
30° F	1 7/16"	3 15/16"
40° F	1 3/8"	3 7/8"
50° F	1 5/16"	3 13/16"
60° F	1 1/4"	3 3/4"
70° F	1 3/16"	3 11/16"
80° F	1 1/8"	3 5/8"
90° F	1 1/16"	3 9/16"
100° F	1"	3 1/2"

* For E = 1 1/4" (Min.)

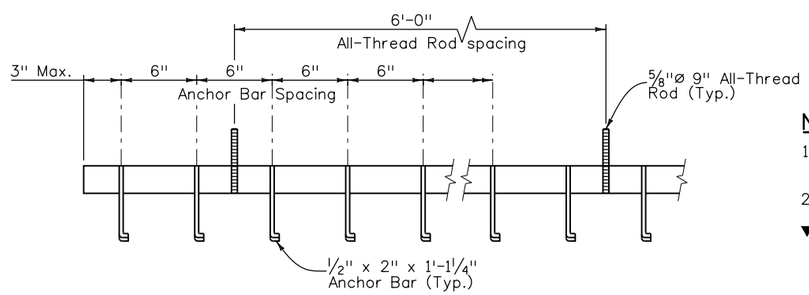

ANCHOR BAR SPACING

NOTES:

1. Provide expansion device support as shown at 6'-0" intervals.
2. For reinforcing see approach slab details.

▼ Concrete shall be placed after expansion device has been adjusted to proper grade and approved by the engineer using the Grade Projection Scheme.

MINIMUM SUPPORT BRACKET REQUIREMENTS

Design			Detail			Quantities		
	INITIAL	DATE		INITIAL	DATE		INITIAL	DATE
Designed By	BJA	10/09	Detailed By	RGA	10/09	Quantities By	TRJ	10/09
Checked By	MJN	10/09	Checked By	MJN	10/09	Checked By	JSM	10/09

BJAllen 10:16:50 AM M:\TRN\07-100-311-12\14679\Bridge\Drawings\Erickson Bridge\14679_BrdgExpDevice_0-4_01.dgn

Print Date: 1/14/2010
File Name: 14679_BrdgExpDevice_0-4_01.dgn
Horiz. Scale: 1:1 Vert. Scale: As Noted
Unit Information 0224 Unit Leader MH

WILSON & COMPANY Engineers & Architects
999 18TH STREET, SUITE 2600
DENVER, CO 80202
PHONE: 303-297-2976
FAX: 303-297-2693

Sheet Revisions		
Date:	Comments	Init.

Colorado Department of Transportation
DOT DEPARTMENT OF TRANSPORTATION
8833 South Wadsworth Court
Littleton, CO 80128
Phone: 303-972-9112 FAX: 303-972-9114
Region 6 RLB

As Constructed
No Revisions:
Revised:
Void:

FLYOVER RAMP OVER ERICKSON BRIDGE EXPANSION DEVICE (0-4 INCH) (1 OF 2)

Designer: B. Allen
Detailer: R. Artman
Sheet Subset: Bridge
Structure Numbers: F-16-WY
Subset Sheets: B21 of B26

Project No./Code
ES6 0852-103
17679
Sheet Number 282

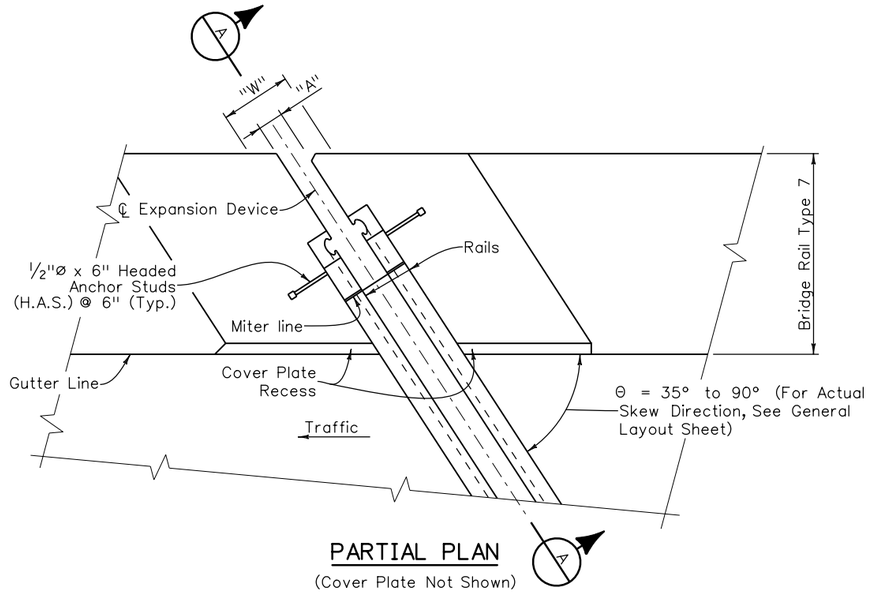

PARTIAL PLAN
(Cover Plate Not Shown)

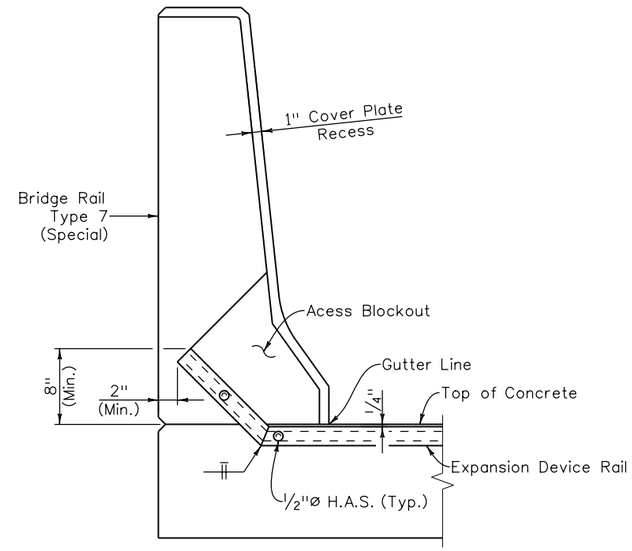

SECTION A

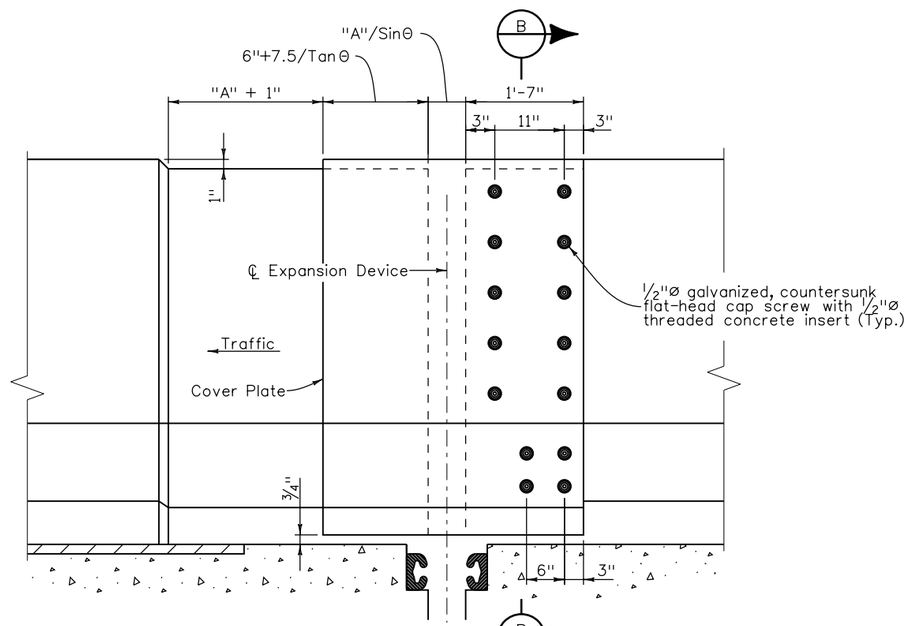

ELEVATION
(Traffic face of Bridge Barrier)

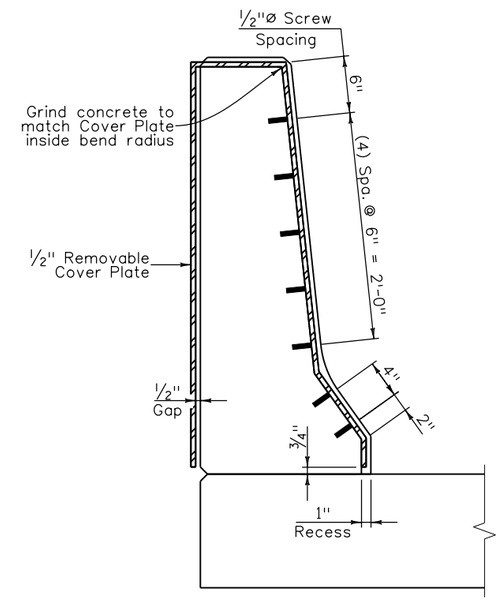

SECTION B

NOTES:

1. Cover plate shall be AASHTO M270, Grade 36.
2. Cover plate shall be galvanized after fabrication.

Design				Detail				Quantities			
	INITIAL	DATE		INITIAL	DATE			INITIAL	DATE		
Designed By	BJA	10/09	Detailed By	RGA	10/09	Quantities By		TRJ	10/09		
Checked By	MJN	10/09	Checked By	MJN	10/09	Checked By		JSM	10/09		

BJAllen 10:17:44 AM M:\TRN\07-100-311-12\14679\Bridge\Drawings\Erickson Bridge\14679_BrdgExpDevice_0-4_02.dgn

Print Date: 1/14/2010
File Name: 14679_BrdgExpDevice_0-4_02.dgn
Horiz. Scale: 1:1 Vert. Scale: As Noted
Unit Information 0224 Unit Leader MH

WILSON & COMPANY Engineers & Architects
999 18TH STREET, SUITE 2600
DENVER, CO 80202
PHONE: 303-297-2976
FAX: 303-297-2993

Sheet Revisions		
Date:	Comments	Init.

Colorado Department of Transportation
8833 South Wadsworth Court
Littleton, CO 80128
Phone: 303-972-9112 FAX: 303-972-9114
Region 6 RLB

As Constructed
No Revisions:
Revised:
Void:

FLYOVER RAMP OVER ERICKSON
BRIDGE EXPANSION DEVICE
(0-4 INCH) (2 OF 2)

Designer: B. Allen
Detailer: R. Artman
Sheet Subset: Bridge
Structure Numbers: F-16-WY
Subset Sheets: B22 of B26

Project No./Code
ES6 0852-103
17679
Sheet Number 283

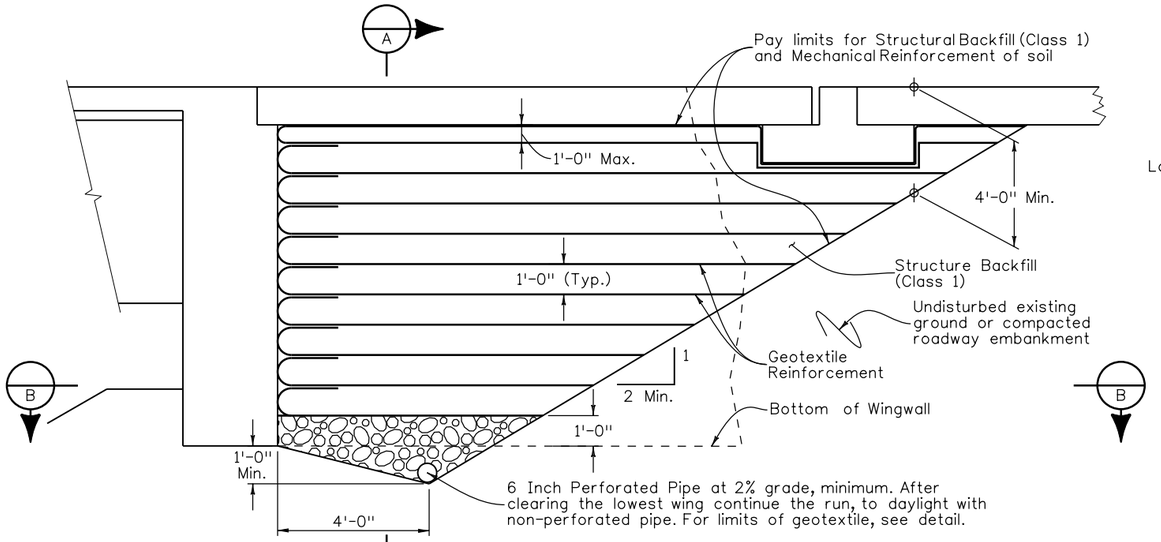

SECTION PERPENDICULAR TO ABUTMENT

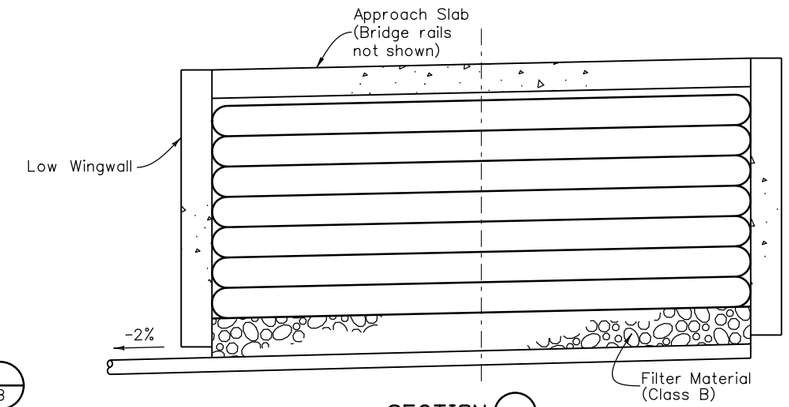

SECTION A

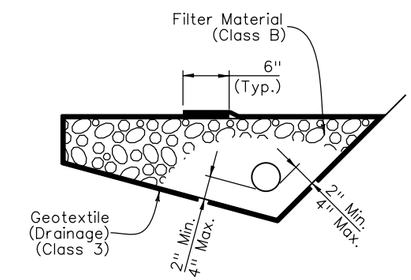

6 INCH PERFORATED PIPE UNDERDRAIN

6 Inch Perforated Pipe Underdrain includes all Filter Material (Class B) and Geotextile (Drainage) (Class A) surrounding the filter Material (Class B).

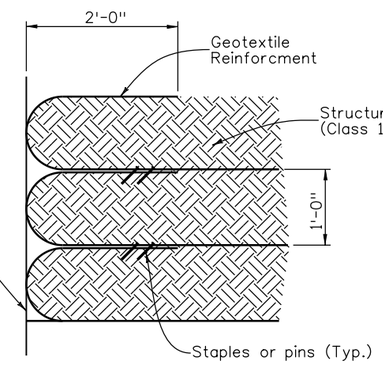

WRAP DETAIL

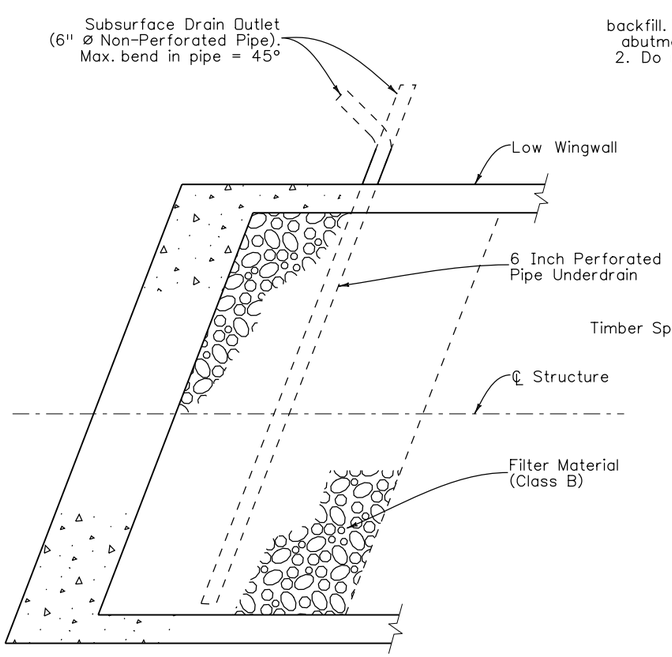

SECTION B

Provide gap between the abutment and backfill. The gap width shall be at least 0.5% of the abutment height, 1" minimum. See Gap Detail 1 and 2. Do not provide this gap at bottom 2 nor the top 2 layers of Reinforced Soil.

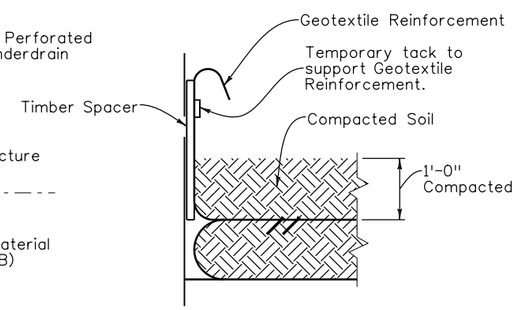

GAP DETAIL STEP 1

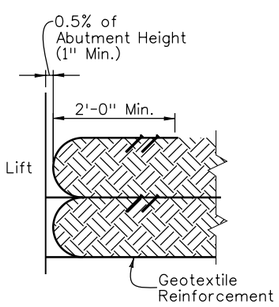

GAP DETAIL STEP 2

When required, the Geotextile Reinforcement wrap at Back Face of Abutment shall be temporarily hung with a spacer board and tack strip. After reaching a total of 1'-0" compacted lift, the tack strip shall be removed and Geotextile Reinforcement shall be pulled back slack free with its end anchored to soil underneath with staple or pins before the spacer board is pulled. Any alternate method to maintain the minimum gap between abutment concrete and Reinforced Soil may be proposed to the Engineer for approval.

NOTES:

1. Geotextile reinforcement shall be woven fabric with a Minimum Average Roll Value of 4800 lb/ft for installations with a gap and 2400 lb/ft for installations without a gap based on ASTM D4595.
2. Geotextile Reinforcement shall be placed by alternating Machine Direction (MD) with Cross Machine Direction (XD) from layer to layer.
3. The Geotextile Reinforcement wrap at Back Face of Abutment shall be pulled back slack free with its end anchored to soil underneath with staples or pins.
4. Minimum splice of all Geofabric shall consist of 6" of overlap.
5. Payment will be made under item 206 Mechanical Reinforcement of Soil (cu.yd.) and item 206 Structure Backfill (Class 1) (cu.yd.) and shall include the cost for 6 inch Perforated Pipe underdrain and Subsurface Drain Outlet (6"ø Non-Perforated Pipe).
6. Installation of Pipe Underdrain and Subsurface Drain Outlet will conform to the Construction requirements of section 605.03 and 605.06, respectively.

Quantities			
	INITIAL	DATE	
Quantities By	TRJ	10/09	
Checked By	JSM	10/09	

Detail			
	INITIAL	DATE	
Detailed By	RGA	10/09	
Checked By	MJN	10/09	

Design			
	INITIAL	DATE	
Designed By	BJA	10/09	
Checked By	MJN	10/09	

BJAllen 10:18:29 AM M:\TRN\07-100-311-12\14679\Bridge\Drawings\Erickson Bridge\14679_MSB_01.dgn

Print Date: 1/14/2010
File Name: 14679_MSB_01.dgn
Horiz. Scale: 1:1 Vert. Scale: As Noted
Unit Information 0224 Unit Leader MH

WILSON & COMPANY Engineers & Architects
999 18TH STREET, SUITE 2600
DENVER, CO 80202
PHONE: 303-297-2976
FAX: 303-297-2693

Sheet Revisions		
Date:	Comments	Init.

Colorado Department of Transportation
8833 South Wadsworth Court
Littleton, CO 80128
Phone: 303-972-9112 FAX: 303-972-9114
Region 6 RLB

As Constructed
No Revisions:
Revised:
Void:

FLYOVER RAMP OVER ERICKSON MECHANICALLY STABILIZED BACKFILL

Designer:	B. Allen	Structure Numbers	F-16-WY
Detailer:	R. Artman		
Sheet Subset:	Bridge	Subset Sheets: B23 of B26	

Project No./Code
ES6 0852-103
17679
Sheet Number 284

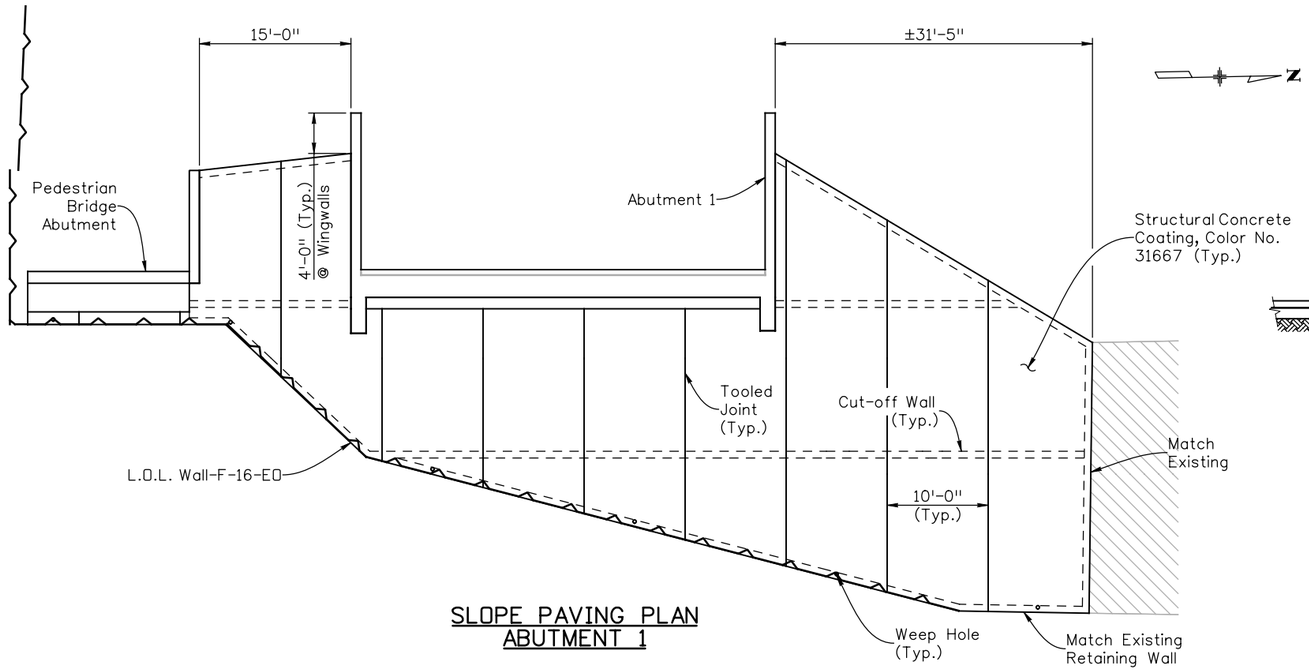

SLOPE PAVING PLAN
ABUTMENT 1

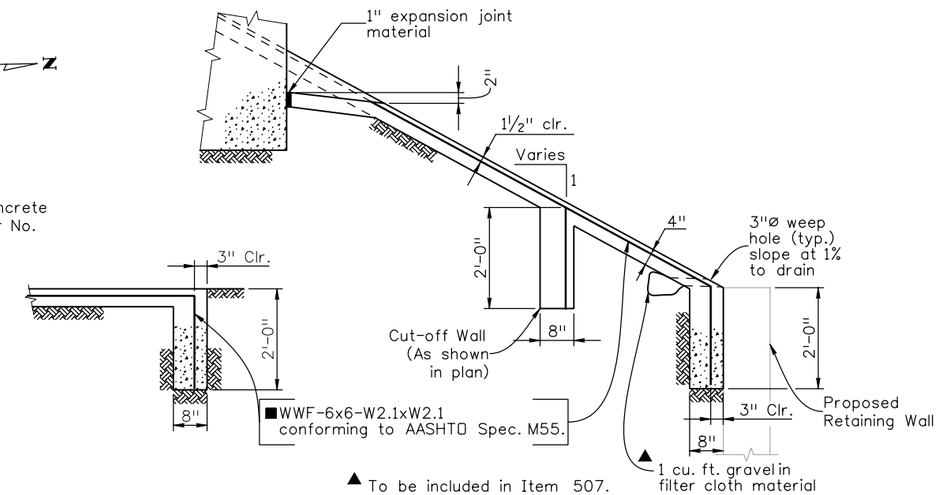

TYPICAL SECTION
THRU CUT-OFF WALL

TYPICAL SECTION
THRU SLOPE PAVING

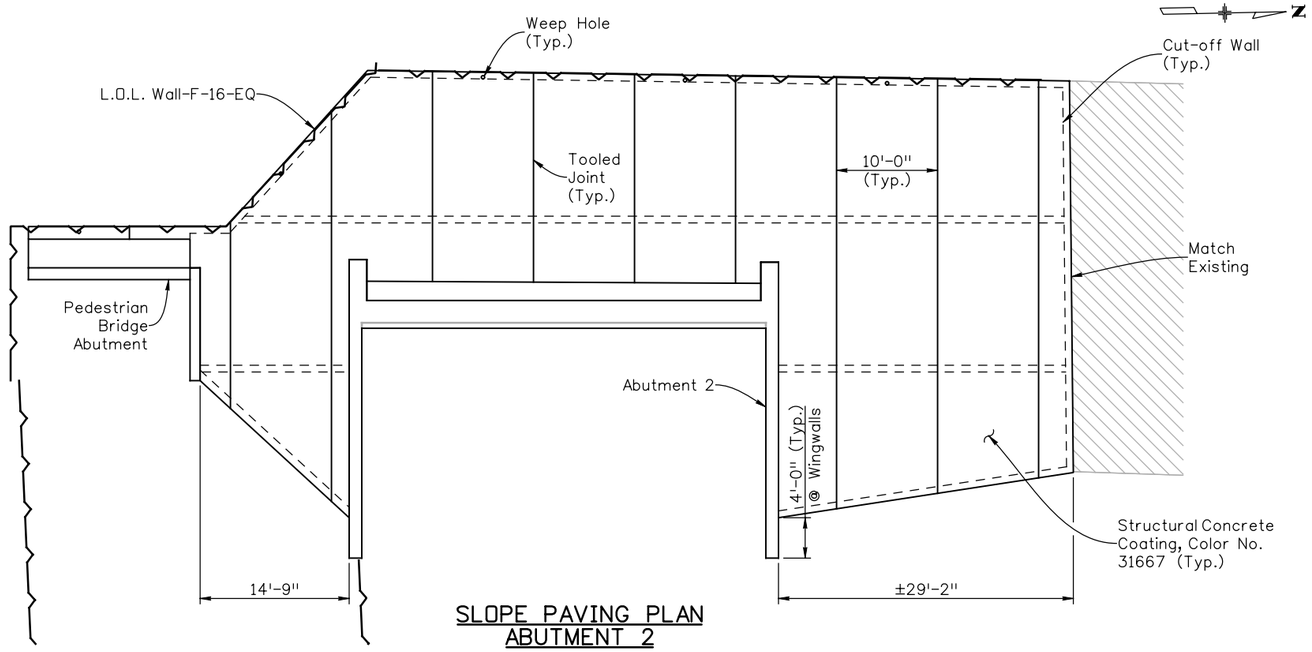

SLOPE PAVING PLAN
ABUTMENT 2

NOTES:

1. Slope paving shall be poured in 10 ft. transverse sections with a tooled construction joint at each section.
2. Wire fabric shall be 2" from the end of joints and shall lap 8" at splices.
3. Where slope or berm paving butts against structural concrete, separate with 1" expansion joint material.
4. Expansion joint material and welded wire fabric shall not be paid for separately, but shall be included in the work.
5. Structure excavation for concrete slope and ditch paving shall be limited to the actual volume occupied by the slope paving concrete.
6. ■ 2.5 lbs. of an approved polypropylene fiber, per cubic yard of concrete, may be substituted for the WWF in this slope paving. If this substitution is made, a continuous #5 reinforcing bar shall be added near the top and bottom of the cutoff wall. The fiber shall be added to the concrete mix in such a fashion that the fibers are uniformly dispersed in the concrete without visible balls or clumps in either the finished slope paving or in the plastic concrete delivered from the concrete truck.

Design				Detail				Quantities		
	INITIAL	DATE		INITIAL	DATE		INITIAL	DATE
Designed By	BJA	10/09	Detailed By	RGA	10/09	Quantities By	TRJ	10/09
Checked By	MJN	10/09	Checked By	BJA	10/09	Checked By	JSM	10/09

rgartman 1:16:41 PM M:\TRN\07-100-311-12\14679\Bridge\Drawings\Erickson Bridge\14679_SlopePavingDet_01.dgn

Print Date: 1/14/2010			
File Name: 14679_SlopePavingDet_01.dgn			
Horiz. Scale: 1:1	Vert. Scale: As Noted		
Unit Information 0224	Unit Leader MH		

WILSON & COMPANY Engineers & Architects
999 18TH STREET, SUITE 2600
DENVER, CO 80202
PHONE: 303-297-2976
FAX: 303-297-2693

Sheet Revisions

Date:	Comments	Init.

Colorado Department of Transportation
DOT
DEPARTMENT OF TRANSPORTATION
8833 South Wadsworth Court
Littleton, CO 80128
Phone: 303-972-9112 FAX: 303-972-9114
Region 6 RLB

As Constructed
No Revisions:
Revised:
Void:

FLYOVER RAMP OVER ERICKSON
SLOPE PAVING DETAILS

Designer:	A. Leifheit	Structure Numbers	F-16-WY
Detailer:	R. Artman		
Sheet Subset:	Bridge	Subset Sheets: B24 of B26	

Project No./Code
ES6 0852-103
17679
Sheet Number 285

State of Colorado
Department of Transportation
Staff Bridge Design
Bridge Geometry Project Coordinate Converter
Version 1.00

Run date & time = Mon Nov 30 13:33:03 2009

Input Northing Offset = 318681.803300
Input Easting Offset = 181577.472500
Input Bearing = S 88 47 34.0000 E

DESCRIPTION

Units: feet;
Project: ES6 0852-103; Subaccount: 17679;
Designer: A LEIFHEIT; Detailer: D ANDERSON;
Location: ERICKSON;
125' Simple span - Flyover Ramp over Erickson Blvd.

HORIZONTAL ALIGNMENT DATA

HORIZONTAL TANGENT

VERTICAL ALIGNMENT DATA

ELEVATION AT PI	ELEVATION AT GRADE		STATION	ELEVATION AT GRADE	ELEVATION AT PI	PERCENT GRADE
						-3.860000
	5461.9900	PC	731+10.0000			
5448.4800	5456.2325	PI	734+60.0000			
	5465.9800	PT	738+10.0000			
						5.000000

TABLE OF ROADWAY CROSS-SLOPES (SUPERELEVATION: E= -NC-)

STATION	SLOPE LEFT	SLOPE RIGHT	VC LENGTH
(ON TANGENT)	-0.0200	0.0200	50.00 (MAX)

OFFSET PROFILE CONTROL TO PIVOT POINT = 0.0000 FEET

LIMITS OF VALID ELEVATION AND CROSS-SLOPE DATA — BEGIN: * UNLIMITED * — END: * UNLIMITED *

LAYOUT LINE DATA

LAYOUT LINE DEFINED TO BE COINCIDENT WITH HORIZONTAL CONTROL

	HCL STA	OFFSET	X	Y
LAYOUT LINE INTERSECTS REF LINE AT	741+94.7200	0.00000000	0.0000	0.0000

DEAD LOAD DEFLECTION DATA

DEFLECTIONS AT TENTH POINTS FROM FITTED CURVE

FOR BENT LINE: CL BRG 1 07 CARD(S): 1 GIRDER LINES REFERENCED BY: A

	0.0	0.1	0.2	0.3	0.4	0.5	0.6	0.7	0.8	0.9	1.0		
													A4= 0.00000
INCH	0.0000	1.4236	2.7291	3.7677	4.4334	4.6624	4.4334	3.7677	2.7291	1.4236	0.0000	INCH	A3= 0.00000
FOOT	0.0000	0.1186	0.2274	0.3140	0.3694	0.3885	0.3694	0.3140	0.2274	0.1186	0.0000	FOOT	A2= 17.6965
													A1=-17.6965
SLOPE	1.185442										-1.185442	SLOPE	A0=-14.2253

BENT LINE DESCRIPTION	INTERSECTION POINT STATION	OFFSET	ELEVATION		FROM LAYOUT LINE OFFSET X	ORDINATE Y	PROJECT COORDINATES NORTHING	EASTING	BENT LINE LENGTH FROM Y-AXIS	SKEW D M S	GIRDER LINE LENGTH FROM REF LINE	ROADWAY CROSS-SLOPE
* HORIZONTAL CONTROL LINE *			AT FINISHED GRADE									
END APRCH1	741+73.1160	0.0000	5484.1358	4	0.0000	-21.6040	318682.2585	181555.8733	0.0000	0 00 00.00	-21.6040	+/-.020000
BF ABUT 1	741+93.2200	0.0000	5485.1410	1	0.0000	-1.5000	318681.8349	181575.9728	0.0000	0 00 00.00	-1.5000	+/-.020000
CL BRG 1	741+94.7200	0.0000	5485.2160	10	0.0000	0.0000	318681.8033	181577.4725	0.0000	0 00 00.00	0.0000	+/-.020000
CL BRG 2	743+19.7200	0.0000	5491.4660	1	0.0000	125.0000	318679.1697	181702.4448	0.0000	0 00 00.00	125.0000	+/-.020000
BF ABUT 2	743+21.2200	0.0000	5491.5410	4	0.0000	126.5000	318679.1381	181703.9444	0.0000	0 00 00.00	126.5000	+/-.020000
END APRCH2	743+41.3240	0.0000	5492.5462	1	0.0000	146.6040	318678.7146	181724.0440	0.0000	0 00 00.00	146.6040	+/-.020000

Left Edge of Deck PARALLEL TO HORIZONTAL CONTROL 0.250000 FEET BELOW FINISHED GRADE

BENT LINE	STATION	OFFSET	ELEVATION	ELEV+DL	X	Y	NORTHING	EASTING	BENT LNTH	SKEW	GIRDER LNTH	CRS-SLP
END APRCH1	741+73.1160	-29.5000	5483.2958		-29.5000	-21.6040	318711.7519	181556.4948	-29.5000	0 00 00.00	-21.6040	-0.020000
F-1	741+78.1420	-29.5000	5483.5471		-29.5000	-16.5780	318711.6460	181561.5197			-16.5780	-0.020000
F-2	741+83.1680	-29.5000	5483.7984		-29.5000	-11.5520	318711.5401	181566.5446			-11.5520	-0.020000
F-3	741+88.1940	-29.5000	5484.0497		-29.5000	-6.5260	318711.4342	181571.5695			-6.5260	-0.020000
BF ABUT 1	741+93.2200	-29.5000	5484.3010		-29.5000	-1.5000	318711.3284	181576.5944	-29.5000	0 00 00.00	-1.5000	-0.020000
CL BRG 1	741+94.7200	-29.5000	5484.3760		-29.5000	0.0000	318711.2968	181578.0940	-29.5000	0 00 00.00	0.0000	-0.020000
F-1	742+07.2200	-29.5000	5485.0010		-29.5000	12.5000	318711.0334	181590.5912			12.5000	-0.020000
F-2	742+19.7200	-29.5000	5485.6260		-29.5000	25.0000	318710.7700	181603.0885			25.0000	-0.020000
F-3	742+32.2200	-29.5000	5486.2510		-29.5000	37.5000	318710.5067	181615.5857			37.5000	-0.020000
F-4	742+44.7200	-29.5000	5486.8760		-29.5000	50.0000	318710.2433	181628.0829			50.0000	-0.020000
F-5	742+57.2200	-29.5000	5487.5010		-29.5000	62.5000	318709.9800	181640.5801			62.5000	-0.020000
F-6	742+69.7200	-29.5000	5488.1260		-29.5000	75.0000	318709.7166	181653.0774			75.0000	-0.020000
F-7	742+82.2200	-29.5000	5488.7510		-29.5000	87.5000	318709.4533	181665.5746			87.5000	-0.020000
F-8	742+94.7200	-29.5000	5489.3760		-29.5000	100.0000	318709.1899	181678.0718			100.0000	-0.020000
F-9	743+07.2200	-29.5000	5490.0010		-29.5000	112.5000	318708.9266	181690.5690			112.5000	-0.020000
CL BRG 2	743+19.7200	-29.5000	5490.6260		-29.5000	125.0000	318708.6632	181703.0663	-29.5000	0 00 00.00	125.0000	-0.020000
BF ABUT 2	743+21.2200	-29.5000	5490.7010		-29.5000	126.5000	318708.6316	181704.5659	-29.5000	0 00 00.00	126.5000	-0.020000
F-1	743+26.2460	-29.5000	5490.9523		-29.5000	131.5260	318708.5257	181709.5908			131.5260	-0.020000
F-2	743+31.2720	-29.5000	5491.2036		-29.5000	136.5520	318708.4198	181714.6157			136.5520	-0.020000
F-3	743+36.2980	-29.5000	5491.4549		-29.5000	141.5780	318708.3139	181719.6406			141.5780	-0.020000
END APRCH2	743+41.3240	-29.5000	5491.7062		-29.5000	146.6040	318708.2080	181724.6655	-29.5000	0 00 00.00	146.6040	-0.020000

G1 PARALLEL TO HORIZONTAL CONTROL 0.250000 FEET BELOW FINISHED GRADE

BENT LINE	STATION	OFFSET	ELEVATION	ELEV+DL	X	Y	NORTHING	EASTING	BENT LNTH	SKEW	GIRDER LNTH	CRS-SLP
BF ABUT 1	741+93.2200	-25.8333	5484.3743		-25.8333	-1.5000	318707.6625	181576.5171	-25.8333	0 00 00.00	-1.5000	-0.020000
CL BRG 1	741+94.7200	-25.8333	5484.4493	484.4493	-25.8333	0.0000	318707.6309	181578.0168	-25.8333	0 00 00.00	0.0000	-0.020000
F-1	742+07.2200	-25.8333	5485.0743	485.1930	-25.8333	12.5000	318707.3675	181590.5140			12.5000	-0.020000
F-2	742+19.7200	-25.8333	5485.6993	485.9268	-25.8333	25.0000	318707.1042	181603.0112			25.0000	-0.020000
F-3	742+32.2200	-25.8333	5486.3243	486.6383	-25.8333	37.5000	318706.8408	181615.5084			37.5000	-0.020000
F-4	742+44.7200	-25.8333	5486.9493	487.3188	-25.8333	50.0000	318706.5774	181628.0057			50.0000	-0.020000
F-5	742+57.2200	-25.8333	5487.5743	487.9629	-25.8333	62.5000	318706.3141	181640.5029			62.5000	-0.020000
F-6	742+69.7200	-25.8333	5488.1993	488.5688	-25.8333	75.0000	318706.0507	181653.0001			75.0000	-0.020000
F-7	742+82.2200	-25.8333	5488.8243	489.1383	-25.8333	87.5000	318705.7874	181665.4973			87.5000	-0.020000
F-8	742+94.7200	-25.8333	5489.4493	489.6768	-25.8333	100.0000	318705.5240	181677.9946			100.0000	-0.020000
F-9	743+07.2200	-25.8333	5490.0743	490.1930	-25.8333	112.5000	318705.2607	181690.4918			112.5000	-0.020000
CL BRG 2	743+19.7200	-25.8333	5490.6993	490.6993	-25.8333	125.0000	318704.9973	181702.9890	-25.8333	0 00 00.00	125.0000	-0.020000
BF ABUT 2	743+21.2200	-25.8333	5490.7743		-25.8333	126.5000	318704.9657	181704.4887	-25.8333	0 00 00.00	126.5000	-0.020000

G2 PARALLEL TO HORIZONTAL CONTROL 0.250000 FEET BELOW FINISHED GRADE

BENT LINE	STATION	OFFSET	ELEVATION	ELEV+DL	X	Y	NORTHING	EASTING	BENT LNTH	SKEW	GIRDER LNTH	CRS-SLP
BF ABUT 1	741+93.2200	-17.9167	5484.5327		-17.9167	-1.5000	318699.7476	181576.3503	-17.9167	0 00 00.00	-1.5000	-0.020000
CL BRG 1	741+94.7200	-17.9167	5484.6077	484.6077	-17.9167	0.0000	318699.7160	181577.8500	-17.9167	0 00 00.00	0.0000	-0.020000
F-1	742+07.2200	-17.9167	5485.2327	485.3513	-17.9167	12.5000	318699.4527	181590.3472			12.5000	-0.020000
F-2	742+19.7200	-17.9167	5485.8577	486.0851	-17.9167	25.0000	318699.1893	181602.8444			25.0000	-0.020000
F-3	742+32.2200	-17.9167	5486.4827	486.7966	-17.9167	37.5000	318698.9260	181615.3417			37.5000	-0.020000
F-4	742+44.7200	-17.9167	5487.1077	487.4771	-17.9167	50.0000	318698.6626	181627.8389			50.0000	-0.020000
F-5	742+57.2200	-17.9167	5487.7327	488.1212	-17.9167	62.5000	318698.3992	181640.3361			62.5000	-0.020000
F-6	742+69.7200	-17.9167	5488.3577	488.7271	-17.9167	75.0000	318698.1359	181652.8333			75.0000	-0.020000
F-7	742+82.2200	-17.9167	5488.9827	489.2966	-17.9167	87.5000	318697.8725	181665.3306			87.5000	-0.020000
F-8	742+94.7200	-17.9167	5489.6077	489.8351	-17.9167	100.0000	318697.6092	181677.8278			100.0000	-0.020000
F-9	743+07.2200	-17.9167	5490.2327	490.3513	-17.9167	112.5000	318697.3458	181690.3250			112.5000	-0.020000
CL BRG 2	743+19.7200	-17.9167	5490.8577	490.8577	-17.9167	125.0000	318697.0825	181702.8222	-17.9167	0 00 00.00	125.0000	-0.020000
BF ABUT 2	743+21.2200	-17.9167	5490.9327		-17.9167	126.5000	318697.0509	181704.3219	-17.9167	0 00 00.00	126.5000	-0.020000

G3 PARALLEL TO HORIZONTAL CONTROL 0.250000 FEET BELOW FINISHED GRADE

BENT LINE	STATION	OFFSET	ELEVATION	ELEV+DL	X	Y	NORTHING	EASTING	BENT LNTH	SKEW	GIRDER LNTH	CRS-SLP
BF ABUT 1	741+93.2200	-10.0000	5484.6910		-10.0000	-1.5000	318691.8327	181576.1835	-10.0000	0 00 00.00	-1.5000	-0.020000
CL BRG 1	741+94.7200	-10.0000	5484.7660	484.7660	-10.0000	0.0000	318691.8011	181577.6832	-10.0000	0 00 00.00	0.0000	-0.020000
F-1	742+07.2200	-10.0000	5485.3910	485.5096	-10.0000	12.5000	318691.5377	181590.1804			12.5000	-0.020000
F-2	742+19.7200	-10.0000	5486.0160	486.2434	-10.0000	25.0000	318691.2744	181602.6776			25.0000	-0.020000
F-3	742+32.2200	-10.0000	5486.6410	486.9550	-10.0000	37.5000	318691.0110	181615.1749			37.5000	-0.020000
F-4	742+44.7200	-10.0000	5487.2660	487.6354	-10.0000	50.0000	318690.7477	181627.6721			50.0000	-0.020000
F-5	742+57.2200	-10.0000	5487.8910	488.2795	-10.0000	62.5000	318690.4843	181640.1693			62.5000	-0.020000
F-6	742+69.7200	-10.0000	5488.5160	488.8854	-10.0000	75.0000	318690.2209	181652.6665			75.0000	-0.020000
F-7	742+82.2200	-10.0000	5489.1410	489.4550	-10.0000	87.5000	318689.9576	181665.1638			87.5000	-0.020000
F-8	742+94.7200	-10.0000	5489.7660	489.9934	-10.0000	100.0000	318689.6942	181677.6610			100.0000	-0.020000
F-9	743+07.2200	-10.0000	5490.3910	490.5096	-10.0000	112.5000	318689.4309	181690.1582			112.5000	-0.020000
CL BRG 2	743+19.7200	-10.0000	5491.0160	491.0160	-10.0000	125.0000	318689.1675	181702.6554	-10.0000	0 00 00.00	125.0000	-0.020000
BF ABUT 2	743+21.2200	-10.0000	5491.0910		-10.0000	126.5000	318689.1359	181704.1551	-10.0000	0 00 00.00	126.5000	-0.020000

	Initial	Date
Design — Designed By	AML	10/09
Design — Checked By	BJA	10/09
Detail — Detailed By	DRA	10/09
Detail — Checked By	BJA	10/09
Quantities — Quantities By	TRJ	10/09
Quantities — Checked By	MJN	10/09

BJAllen 10:21:27 AM M:\TRN\07-100-311-12\14679\Bridge\Drawings\Erickson Bridge\14679_Brdg_Geometry_01.dgn

Print Date: 1/14/2010
File Name: 14679_Brdg_Geometry_01.dgn
Horiz. Scale: 1:1 Vert. Scale: As Noted
Unit Information 0224 Unit Leader MH

WILSON & COMPANY Engineers & Architects — 999 18TH STREET, SUITE 2600, DENVER, CO 80202, PHONE: 303-297-2976, FAX: 303-297-2693

Sheet Revisions		
Date:	Comments	Init.

Colorado Department of Transportation
8833 South Wadsworth Court
Littleton, CO 80128
Phone: 303-972-9112 FAX: 303-972-9114
Region 6 RLB

As Constructed
No Revisions:
Revised:
Void:

FLYOVER RAMP OVER ERICKSON
BRIDGE DECK ELEVATIONS
(1 OF 2)

Designer: A. Leifheit
Detailer: D. Anderson
Structure Numbers: F-16-WY
Sheet Subset: Bridge Subset Sheets: B25 of B26

Project No./Code
ES6 0852-103
17679
Sheet Number 286

G4 PARALLEL TO HORIZONTAL CONTROL 0.250000 FEET BELOW FINISHED GRADE

BENT LINE	STATION	OFFSET	ELEVATION	ELEV+DL	X	Y	NORTHING	EASTING	BENT LNTH	SKEW	GIRDER LNTH	CRS-SLP
BF ABUT 1	741+93.2200	-2.0833	5484.8493		-2.0833	-1.5000	318683.9177	181576.0167	-2.0833	0 00 00.00	-1.5000	-0.020000
CL BRG 1	741+94.7200	-2.0833	5484.9243	484.9243	-2.0833	0.0000	318683.8861	181577.5164	-2.0833	0 00 00.00	0.0000	-0.020000
F-1	742+07.2200	-2.0833	5485.5493	485.6680	-2.0833	12.5000	318683.6228	181590.0136			12.5000	-0.020000
F-2	742+19.7200	-2.0833	5486.1743	486.4018	-2.0833	25.0000	318683.3594	181602.5108			25.0000	-0.020000
F-3	742+32.2200	-2.0833	5486.7993	487.1133	-2.0833	37.5000	318683.0961	181615.0081			37.5000	-0.020000
F-4	742+44.7200	-2.0833	5487.4243	487.7938	-2.0833	50.0000	318682.8327	181627.5053			50.0000	-0.020000
F-5	742+57.2200	-2.0833	5488.0493	488.4379	-2.0833	62.5000	318682.5694	181640.0025			62.5000	-0.020000
F-6	742+69.7200	-2.0833	5488.6743	489.0438	-2.0833	75.0000	318682.3060	181652.4997			75.0000	-0.020000
F-7	742+82.2200	-2.0833	5489.2993	489.6133	-2.0833	87.5000	318682.0426	181664.9970			87.5000	-0.020000
F-8	742+94.7200	-2.0833	5489.9243	490.1518	-2.0833	100.0000	318681.7793	181677.4942			100.0000	-0.020000
F-9	743+07.2200	-2.0833	5490.5493	490.6680	-2.0833	112.5000	318681.5159	181689.9914			112.5000	-0.020000
CL BRG 2	743+19.7200	-2.0833	5491.1743	491.1743	-2.0833	125.0000	318681.2526	181702.4886	-2.0833	0 00 00.00	125.0000	-0.020000
BF ABUT 2	743+21.2200	-2.0833	5491.2493		-2.0833	126.5000	318681.2210	181703.9883	-2.0833	0 00 00.00	126.5000	-0.020000

G5 PARALLEL TO HORIZONTAL CONTROL 0.250000 FEET BELOW FINISHED GRADE

BENT LINE	STATION	OFFSET	ELEVATION	ELEV+DL	X	Y	NORTHING	EASTING	BENT LNTH	SKEW	GIRDER LNTH	CRS-SLP
BF ABUT 1	741+93.2200	5.8333	5485.0077		5.8333	-1.5000	318676.0029	181575.8499	5.8333	0 00 00.00	-1.5000	+0.020000
CL BRG 1	741+94.7200	5.8333	5485.0827	485.0827	5.8333	0.0000	318675.9713	181577.3496	5.8333	0 00 00.00	0.0000	+0.020000
F-1	742+07.2200	5.8333	5485.7077	485.8263	5.8333	12.5000	318675.7079	181589.8468			12.5000	+0.020000
F-2	742+19.7200	5.8333	5486.3327	486.5601	5.8333	25.0000	318675.4446	181602.3441			25.0000	+0.020000
F-3	742+32.2200	5.8333	5486.9577	487.2716	5.8333	37.5000	318675.1812	181614.8413			37.5000	+0.020000
F-4	742+44.7200	5.8333	5487.5827	487.9521	5.8333	50.0000	318674.9179	181627.3385			50.0000	+0.020000
F-5	742+57.2200	5.8333	5488.2077	488.5962	5.8333	62.5000	318674.6545	181639.8357			62.5000	+0.020000
F-6	742+69.7200	5.8333	5488.8327	489.2021	5.8333	75.0000	318674.3912	181652.3330			75.0000	+0.020000
F-7	742+82.2200	5.8333	5489.4577	489.7716	5.8333	87.5000	318674.1278	181664.8302			87.5000	+0.020000
F-8	742+94.7200	5.8333	5490.0827	490.3101	5.8333	100.0000	318673.8645	181677.3274			100.0000	+0.020000
F-9	743+07.2200	5.8333	5490.7077	490.8263	5.8333	112.5000	318673.6011	181689.8246			112.5000	+0.020000
CL BRG 2	743+19.7200	5.8333	5491.3327	491.3327	5.8333	125.0000	318673.3377	181702.3219	5.8333	0 00 00.00	125.0000	+0.020000
BF ABUT 2	743+21.2200	5.8333	5491.4077		5.8333	126.5000	318673.3061	181703.8215	5.8333	0 00 00.00	126.5000	+0.020000

Right Edge of Deck PARALLEL TO HORIZONTAL CONTROL 0.250000 FEET BELOW FINISHED GRADE

BENT LINE	STATION	OFFSET	ELEVATION	ELEV+DL	X	Y	NORTHING	EASTING	BENT LNTH	SKEW	GIRDER LNTH	CRS-SLP
END APRCH1	741+73.1160	9.5000	5484.0758		9.5000	-21.6040	318672.7606	181555.6731	9.5000	0 00 00.00	-21.6040	+0.020000
F-1	741+78.1420	9.5000	5484.3271		9.5000	-16.5780	318672.6547	181560.6980			-16.5780	+0.020000
F-2	741+83.1680	9.5000	5484.5784		9.5000	-11.5520	318672.5488	181565.7229			-11.5520	+0.020000
F-3	741+88.1940	9.5000	5484.8297		9.5000	-6.5260	318672.4429	181570.7478			-6.5260	+0.020000
BF ABUT 1	741+93.2200	9.5000	5485.0810		9.5000	-1.5000	318672.3370	181575.7727	9.5000	0 00 00.00	-1.5000	+0.020000
CL BRG 1	741+94.7200	9.5000	5485.1560		9.5000	0.0000	318672.3054	181577.2723	9.5000	0 00 00.00	0.0000	+0.020000
F-1	742+07.2200	9.5000	5485.7810		9.5000	12.5000	318672.0421	181589.7696			12.5000	+0.020000
F-2	742+19.7200	9.5000	5486.4060		9.5000	25.0000	318671.7787	181602.2668			25.0000	+0.020000
F-3	742+32.2200	9.5000	5487.0310		9.5000	37.5000	318671.5153	181614.7640			37.5000	+0.020000
F-4	742+44.7200	9.5000	5487.6560		9.5000	50.0000	318671.2520	181627.2613			50.0000	+0.020000
F-5	742+57.2200	9.5000	5488.2810		9.5000	62.5000	318670.9886	181639.7585			62.5000	+0.020000
F-6	742+69.7200	9.5000	5488.9060		9.5000	75.0000	318670.7253	181652.2557			75.0000	+0.020000
F-7	742+82.2200	9.5000	5489.5310		9.5000	87.5000	318670.4619	181664.7529			87.5000	+0.020000
F-8	742+94.7200	9.5000	5490.1560		9.5000	100.0000	318670.1986	181677.2502			100.0000	+0.020000
F-9	743+07.2200	9.5000	5490.7810		9.5000	112.5000	318669.9352	181689.7474			112.5000	+0.020000
CL BRG 2	743+19.7200	9.5000	5491.4060		9.5000	125.0000	318669.6719	181702.2446	9.5000	0 00 00.00	125.0000	+0.020000
BF ABUT 2	743+21.2200	9.5000	5491.4810		9.5000	126.5000	318669.6403	181703.7443	9.5000	0 00 00.00	126.5000	+0.020000
F-1	743+26.2460	9.5000	5491.7323		9.5000	131.5260	318669.5344	181708.7692			131.5260	+0.020000
F-2	743+31.2720	9.5000	5491.9836		9.5000	136.5520	318669.4285	181713.7940			136.5520	+0.020000
F-3	743+36.2980	9.5000	5492.2349		9.5000	141.5780	318669.3226	181718.8189			141.5780	+0.020000
END APRCH2	743+41.3240	9.5000	5492.4862		9.5000	146.6040	318669.2167	181723.8438	9.5000	0 00 00.00	146.6040	+0.020000

Design			Detail			Quantities		
	INITIAL	DATE		INITIAL	DATE		INITIAL	DATE
Designed By	AML	10/09	Detailed By	RGA	10/09	Quantities By	TRJ	10/09
Checked By	BJA	10/09	Checked By	BJA	10/09	Checked By	JSM	10/09

BJAllen 10:21:42 AM M:\TRN\07-100-311-12\14679\Bridge\Drawings\Erickson Bridge\14679_Brdg_Geometry_02.dgn

Print Date: 1/14/2010
File Name: 14679_Brdg_Geometry_02.dgn
Horiz. Scale: 1:1 Vert. Scale: As Noted
Unit Information 0224 Unit Leader MH

WILSON & COMPANY Engineers & Architects
999 16TH STREET, SUITE 2600
DENVER, CO 80202
PHONE: 303-297-2976
FAX: 303-297-2693

Sheet Revisions		
Date:	Comments	Init.

Colorado Department of Transportation
DOT DEPARTMENT OF TRANSPORTATION
8833 South Wadsworth Court
Littleton, CO 80128
Phone: 303-972-9112 FAX: 303-972-9114
Region 6 RLB

As Constructed
No Revisions:
Revised:
Void:

FLYOVER RAMP OVER ERICKSON
BRIDGE DECK ELEVATIONS
(2 OF 2)

Designer: A. Leifheit
Detailer: D. Anderson
Sheet Subset: Bridge
Structure Numbers F-16-WY
Subset Sheets: B26 of B26

Project No./Code
ES6 0852-103
17679
Sheet Number 287