GENERAL NOTES

EXCEPT AS SHOWN IN THE PLANS, STRUCTURE EXCAVATION AND BACKFILL SHALL BE IN ACCORDANCE WITH M-206-2 FOR BRIDGES. ALL STRUCTURE BACKFILL IS TABULATED AND PAID FOR UNDER WALL-F-16-EO AND WALL-F-16-EQ.

EXPANSION JOINT MATERIAL SHALL MEET AASHTO SPECIFICATION M213.

A COLORED STRUCTURAL CONCRETE STAIN FINISH WILL BE REQUIRED, AS SHOWN ON THE PLANS, ON EXPOSED CONCRETE SURFACES. THE COLORS SHALL BE FLESH, EQUIVALENT TO FEDERAL STANDARD 595B COLOR NO. 31667. COLORS ARE TO BE SELECTED FROM TEST PANELS PROVIDED BY THE CONTRACTOR.

ALL STRUCTURAL STEEL SHALL BE AS FOLLOWS:

HOLLOW STRUCTURAL STEEL SECTIONS	ASTM A-847 (WEATHERING STEEL)
PLATES AND OTHER STEEL SHAPES	ASTM A-588 (WEATHERING STEEL)
ANCHOR BOLTS	ASTM F-1554, GRADE 36
NUTS FOR ANCHOR BOLTS	ASTM A-563

ALL BOLTS SHALL BE A-325 (TYPE 3), UNLESS OTHERWISE NOTED WITH ASTM A-563 NUTS. ALL WASHERS SHALL BE SPECIFIED ASTM F-436.

GRADE 60 REINFORCING STEEL IS REQUIRED. ALL REINFORCING STEEL SHALL BE NON-COATED.

ALL CONCRETE SHALL BE CLASS D (BRIDGE) f'c = 4,500 psi.

ALL CONCRETE AND REINFORCING FOR BRIDGE DECK SHALL BE PAID UNDER ITEM 628-00001, BRIDGE GIRDER AND DECK UNIT.

PIPE RAILING APPROACH SLAB CURBS IS TABULATED AND PAID FOR UNDER WALL-F-16-EP AND WALL-F-16-EL.

SLOPE PAVING IS TABULATED AND PAID FOR UNDER STRUCTURE F-16-WY, FLYOVER RAMP OVER ERICKSON.

THE CONTRACTOR SHALL BE RESPONSIBLE FOR THE STABILITY OF THE STRUCTURE DURING CONSTRUCTION.

PERMANENT DECK FORMS ARE OPTIONAL.

FOR STRUCTURE NUMBER INSTALLATION, SEE STANDARD S-614-12.

STATIONS, ELEVATIONS, AND DIMENSIONS CONTAINED IN THESE PLANS ARE CALCULATED FROM A RECENT FIELD SURVEY. THE CONTRACTOR SHALL VERIFY ALL DEPENDENT DIMENSIONS IN THE FIELD BEFORE ORDERING OR FABRICATING ANY MATERIAL.

THE INFORMATION SHOWN ON THESE PLANS CONCERNING THE TYPE AND LOCATION OF UNDERGROUND UTILITIES IS NOT GUARANTEED TO BE ACCURATE OR ALL INCLUSIVE. THE CONTRACTOR SHALL CONTACT THE UTILITY NOTIFICATION CENTER OF COLORADO AT 811 (1-800-922-1987) THREE BUSINESS DAYS (TWO FULL BUSINESS DAYS IN ADVANCE NOT INCLUDING THE DAY OF NOTIFICATION) PRIOR TO ANY EXCAVATION OR OTHER EARTHWORK.

DESIGN DATA

AASHTO LRFD BRIDGE DESIGN SPECIFICATIONS, 4TH EDITION WITH 2009 INTERIM REVISIONS

DESIGN METHOD: LOAD AND RESISTANCE FACTOR DESIGN

LIVE LOAD: PEDESTRIAN (85 PSF, NO REDUCTIONS),
H10 AASHTO MAINTENANCE VEHICLE

DEAD LOAD: ASSUMES 225,000 LBS. MAXIMUM TOTAL SUPERSTRUCTURE WEIGHT

REINFORCED CONCRETE:

CLASS D CONCRETE: f'c = 4,500 psi
REINFORCING STEEL: fy = 60,000 psi

THE FOLLOWING TABLE GIVES THE MINIMUM LAP SPLICE LENGTH FOR NON-COATED REINFORCING BARS PLACED IN ACCORDANCE WITH SUBSECTION 602.06. THESE SPLICE LENGTHS SHALL BE INCREASED BY 25% FOR BARS SPACED AT LESS THAN 6" ON CENTER.

BAR SIZE	#4	#5	#6	#7	#8	#9	#10	#11
SPLICE LENGTH FOR CLASS D CONCRETE	1'-1"	1'-4"	1'-7"	1'-11"	2'-6"	3'-1"	3'-11"	4'-10"

THE FOLLOWING TABLE GIVES THE MINIMUM LAP SPLICE LENGTH FOR EPOXY COATED REINFORCING BARS PLACED IN ACCORDANCE WITH SUBSECTION 602.06. THESE SPLICE LENGTHS SHALL BE INCREASED BY 25% FOR BARS SPACED AT LESS THAN 6" ON CENTER.

BAR SIZE	#4	#5	#6	#7	#8	#9	#10	#11
SPLICE LENGTH FOR CLASS D CONCRETE	1'-3"	1'-7"	2'-5"	2'-10"	3'-8"	4'-8"	5'-11"	7'-3"

WHEN THE CONTRACTOR ELECTS TO SUBSTITUTE EPOXY COATED REINFORCEMENT FOR NON-COATED REINFORCING BARS, THE MINIMUM LAP SPLICE SHALL BE AS DESCRIBED ABOVE.

ABBREVIATIONS

E.F. = EACH FACE
F.F. = FAR FACE
N.F. = NEAR FACE
E.S. = EACH SIDE
A.S. = AS SHOWN

INDEX OF DRAWINGS

SHEET NO.	TITLE
B1	GENERAL NOTES & SUMMARY OF QUANTITIES
B2	GENERAL LAYOUT & TYPICAL SECTION
B3	ENGINEERING GEOLOGY
B4	FOUNDATION LAYOUT
B5	ABUTMENT DETAILS (1 OF 2)
B6	ABUTMENT DETAILS (2 OF 2)
B7	WINGWALL DETAILS

BRIDGE DESCRIPTION

1 - SIMPLE SPAN (121'-0") BRIDGE,
STEEL THRU TRUSS
OVER ERICKSON BLVD.
14'-0" TRAIL TRUSS-TO-TRUSS (INSIDE CLEAR)
NO SKEW.

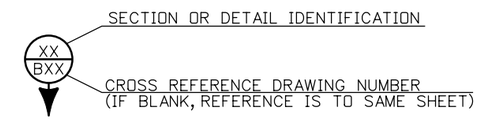

FOR BURIED UTILITY INFORMATION
THREE (3) BUSINESS DAYS BEFORE YOU DIG
CALL 811
(or 1-800-922-1987)
UTILITY NOTIFICATION CENTER OF COLORADO (UNCC)
www.uncc.org

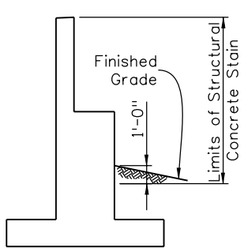

ABUTMENT STAIN LIMITS

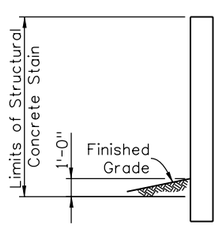

WINGWALL STAIN LIMITS

SUMMARY OF QUANTITIES

Item No.	Description	Units	Total
601-03040	Concrete Class D (Bridge)	CY	37
601-40400	Structural Concrete Stain	SY	41
602-00000	Reinforcing Steel	LB	3683
628-00001	Bridge Girder and Deck Unit	EACH	1

Design			Detail			Quantities		
	INITIAL	DATE		INITIAL	DATE		INITIAL	DATE
Designed By	TRJ	12/09	Detailed By	RGA	12/09	Quantities By	TRJ	12/09
Checked By	BJA	12/09	Checked By	BJA	12/09	Checked By	BJA	12/09

BJAllen 10:22:35 AM M:\TRN\07-100-311-12\14679\Bridge\Drawings\Ped Bridge\14679_GenNotes_01.dgn

Print Date: 1/14/2010
File Name: 14679_GenNotes_01.dgn
Horiz. Scale: 1:1 Vert. Scale: As Noted
Unit Information 0224 Unit Leader MH

WILSON & COMPANY Engineers & Architects
999 18TH STREET, SUITE 2600
DENVER, CO 80202
PHONE: 303-297-2976
FAX: 303-297-2693

Sheet Revisions		
Date:	Comments	Init.

Colorado Department of Transportation
DOT DEPARTMENT OF TRANSPORTATION
8833 South Wadsworth Court
Littleton, CO 80128
Phone: 303-972-9112 FAX: 303-972-9114
Region 6 RLB

As Constructed
No Revisions:
Revised:
Void:

TRAIL OVER ERICKSON
GENERAL NOTES &
SUMMARY OF QUANTITIES

Designer: T. Johnson
Detailer: R. Artman
Sheet Subset: Bridge
Structure Numbers: F-16-WZ
Subset Sheets: B1 of B7

Project No./Code
ES6 0852-103
17679
Sheet Number 288

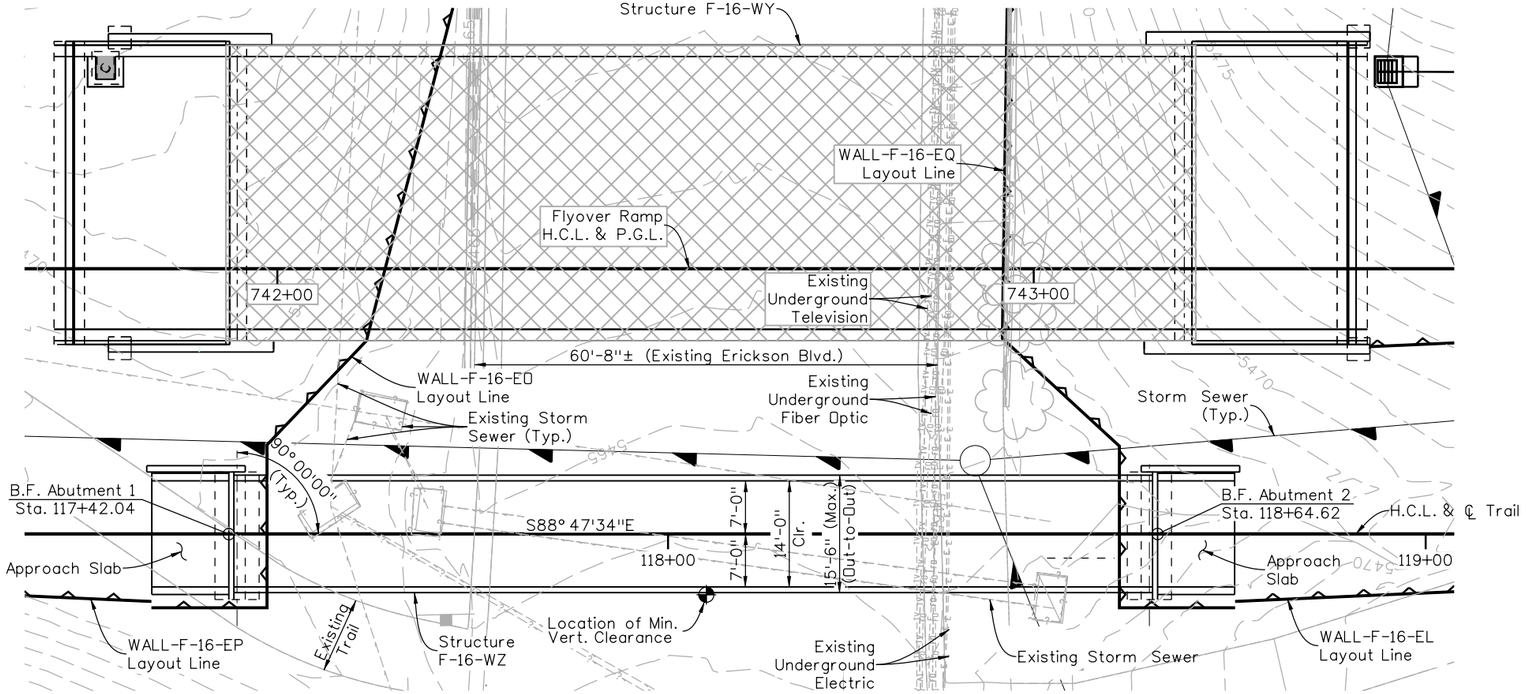

PLAN

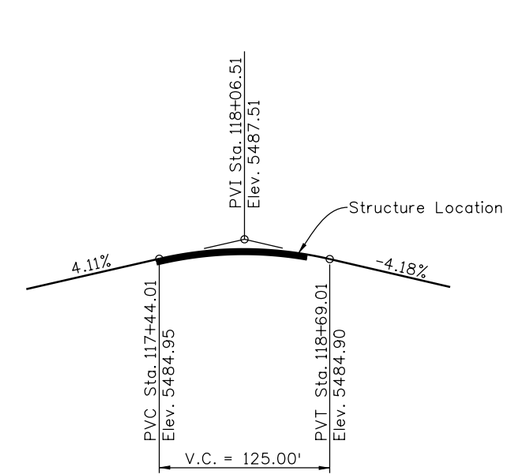

PROFILE GRADE

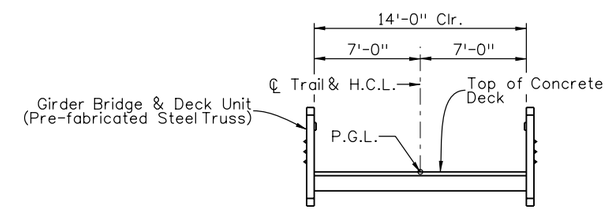

TYPICAL SECTION

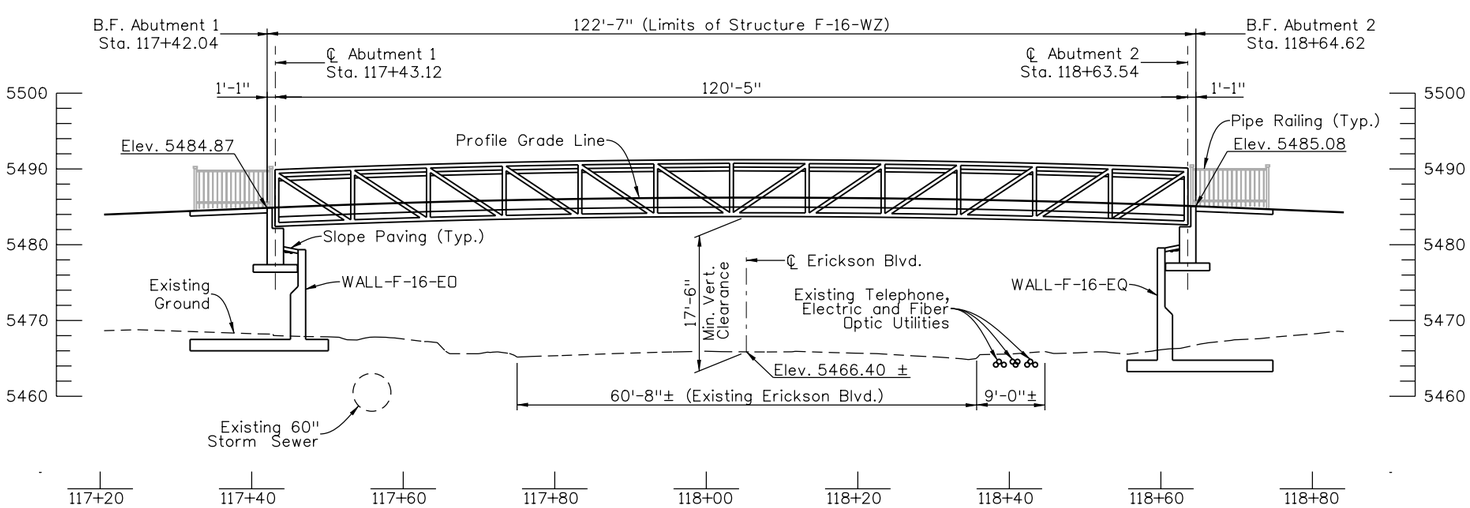

SECTION
(Taken along P.G.L.)

Quantities			
Detail	INITIAL	DATE	
Detailed By	RGA	12/09	Quantities By
Checked By	BJA	12/09	Checked By
Design	INITIAL	DATE	
Designed By	TRJ	12/09	
Checked By	BJA	12/09	

Quantities		
INITIAL	TRJ	BJA
DATE	12/09	12/09

BJAllen 10:24:54 AM M:\TRN\07-100-311-12\14679\Bridge\Drawings\Ped Bridge\14679_GenLay_01.dgn

Print Date: 1/14/2010
File Name: 14679_GenLay_01.dgn
Horiz. Scale: 1:1 Vert. Scale: As Noted
Unit Information 0224 Unit Leader MH

WILSON & COMPANY Engineers & Architects
999 18TH STREET, SUITE 2600
DENVER, CO 80202
PHONE: 303-297-2976
FAX: 303-297-2693

Sheet Revisions

Date:	Comments	Init.

Colorado Department of Transportation
DOT DEPARTMENT OF TRANSPORTATION
8833 South Wadsworth Court
Littleton, CO 80128
Phone: 303-972-9112 FAX: 303-972-9114
Region 6 RLB

As Constructed
No Revisions:
Revised:
Void:

TRAIL OVER ERICKSON
GENERAL LAYOUT

Designer:	T. Johnson	Structure Numbers	F-16-WZ
Detailer:	R. Artman		
Sheet Subset:	Bridge	Subset Sheets:	B2 of B7

Project No./Code
ES6 0852-103
17679
Sheet Number 289

14679_GenLay_01.dgn 1/14/2010 10:24:54 AM

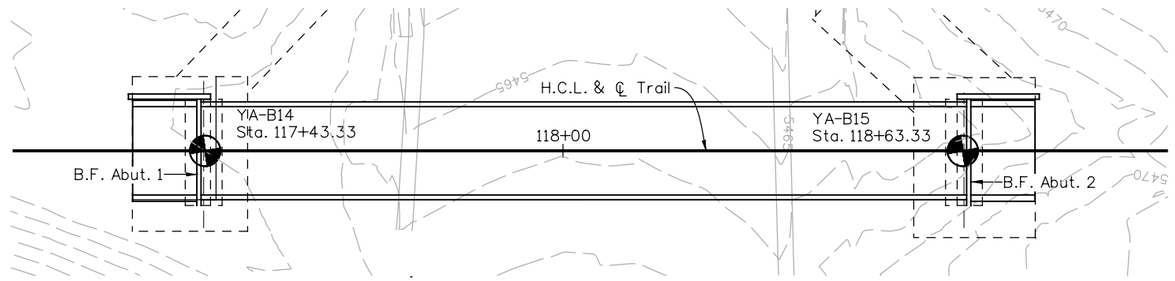

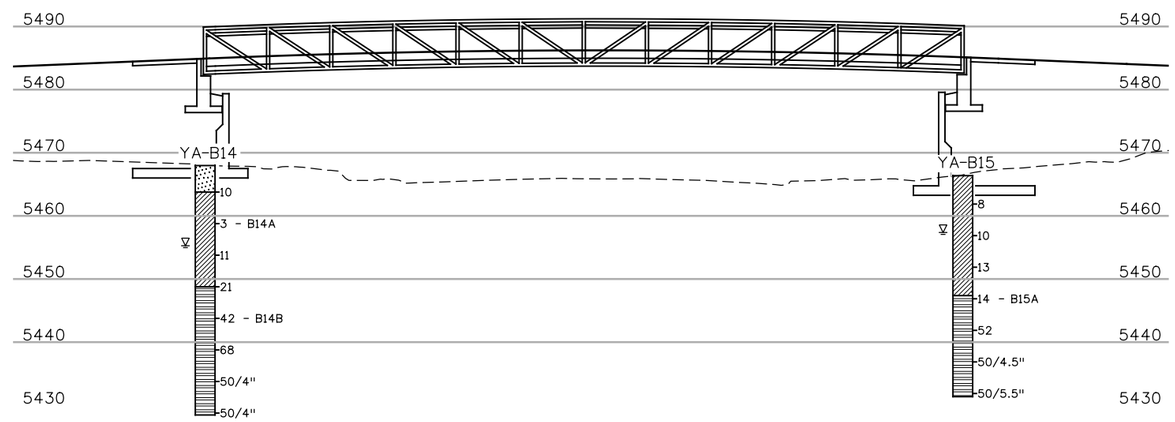

SUMMARY OF TEST RESULTS

Sample No.	Depth	Classification: Corps of Engrs. or Visual	Classification: AASHTO	Grading Analysis (AASHTO) Percent: Gravel	Coarse Sand	Fine Sand	Silt and Clay	Atterberg Limits: Liquid Limit W	Plastic Limit W	Index W	Water Content W %	Dry Unit Weight P.C.F.
B14A	9.5	Clay									21.3	97.5
B14B	24.5	Silty Claystone									22.5	101.5
B15A	19.5	Silty Claystone									17.4	108.2

TYPE OF MATERIAL

- Clay
- Silty Claystone
- Fill

Note: Boulders may be encountered at any depth

LEGEND

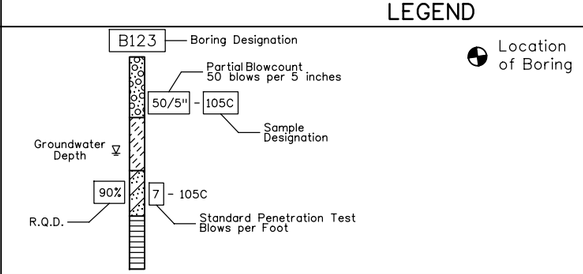

Design	INITIAL	DATE
Designed By	TWS	12/09
Checked By	TWS	12/09

Detail	INITIAL	DATE
Detailed By	RGA	12/09
Checked By	TWS	12/09

Quantities	INITIAL	DATE
Quantities By	TWS	12/09
Checked By	TWS	12/09

rgartmon 11:24:26 AM M:\TRN\07-100-311-12\14679\Bridge\Drawings\Ped Bridge\14679_EngGeology_01.dgn

Print Date: 1/14/2010
File Name: 14679_EngGeology_01.dgn
Horiz. Scale: 1:1 Vert. Scale: As Noted
Unit Information 0224 Unit Leader MH

WILSON & COMPANY Engineers & Architects
999 18TH STREET, SUITE 2600
DENVER, CO 80202
PHONE: 303-297-2976
FAX: 303-297-2693

Sheet Revisions		
Date:	Comments	Init.

Colorado Department of Transportation
DOT DEPARTMENT OF TRANSPORTATION
8833 South Wadsworth Court
Littleton, CO 80128
Phone: 303-972-9112 FAX: 303-972-9114
Region 6 RLB

As Constructed
No Revisions:
Revised:
Void:

TRAIL OVER ERICKSON
ENGINEERING GEOLOGY

Designer: T. Schlittenhart
Detailer: R. Artman
Sheet Subset: Bridge
Structure Numbers: F-16-WZ
Subset Sheets: B3 of B7

Project No./Code
ES6 0852-103
17679
Sheet Number 290

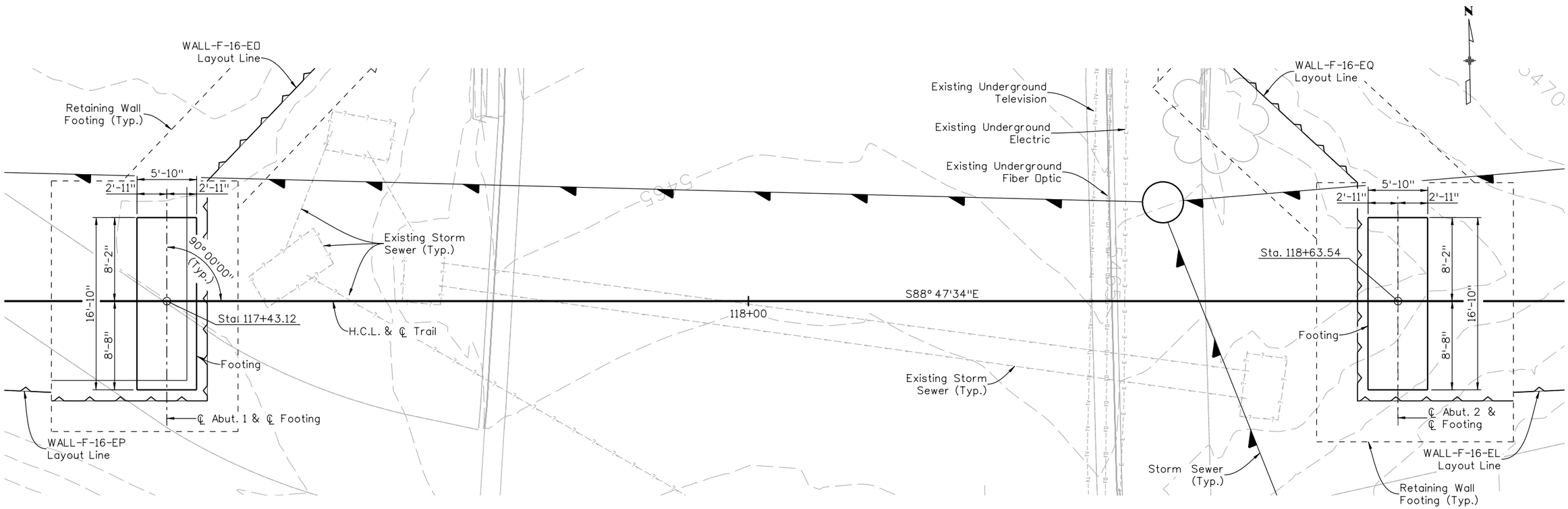

FOUNDATION LAYOUT

NOTES:

1. Footings shall be constructed on Mechanically Stabilized Backfill. See Wall-F-16-EO and Wall-F-16-EQ Plans for details.
2. Footing design based upon recommendations provided by Yeh & Associates, Inc.
3. Footing design data are as follows:

Soil Unit Weight:	125 pcf
Friction Angle:	33 degrees
Equivalent Active Density:	55 pcf
Coefficient of Friction:	0.55
Sliding Resistance Factor:	1.0
Nominal Bearing Capacity:	12,000 psf
Bearing Resistance Factor:	0.45
Maximum Factored Bearing Pressure:	4,600 psf (Strength I)

811. FOR BURIED UTILITY INFORMATION
THREE (3) BUSINESS DAYS
BEFORE YOU DIG
CALL 811
(or 1-800-922-1987)
UTILITY NOTIFICATION
CENTER OF COLORADO (UNCC)
www.uncc.org

Design	INITIAL	DATE	Detail	INITIAL	DATE	Quantities	INITIAL	DATE
Designed By	TRJ	12/09	Detailed By	RGA	12/09	Quantities By	TRJ	12/09
Checked By	BJA	12/09	Checked By	BJA	12/09	Checked By	BJA	12/09

BJAllen 10:28:43 AM M:\TRN\07-100-311-12\14679\Bridge\Drawings\Ped Bridge\14679_FoundLay_01.dgn

Print Date: 1/14/2010
File Name: 14679_FoundLay_01.dgn
Horiz. Scale: 1:1 Vert. Scale: As Noted
Unit Information 0224 Unit Leader MH

WILSON & COMPANY Engineers & Architects
999 18TH STREET, SUITE 2600
DENVER, CO 80202
PHONE: 303-297-2976
FAX: 303-297-2693

Sheet Revisions		
Date:	Comments	Init.

Colorado Department of Transportation
8833 South Wadsworth Court
Littleton, CO 80128
Phone: 303-972-9112 FAX: 303-972-9114
Region 6 RLB

As Constructed
No Revisions:
Revised:
Void:

TRAIL OVER ERICKSON
FOUNDATION LAYOUT

Designer: T. Johnson
Detailer: R. Artman
Structure Numbers: F-16-WZ
Sheet Subset: Bridge
Subset Sheets: B4 of B7

Project No./Code
ES6 0852-103
17679
Sheet Number 291

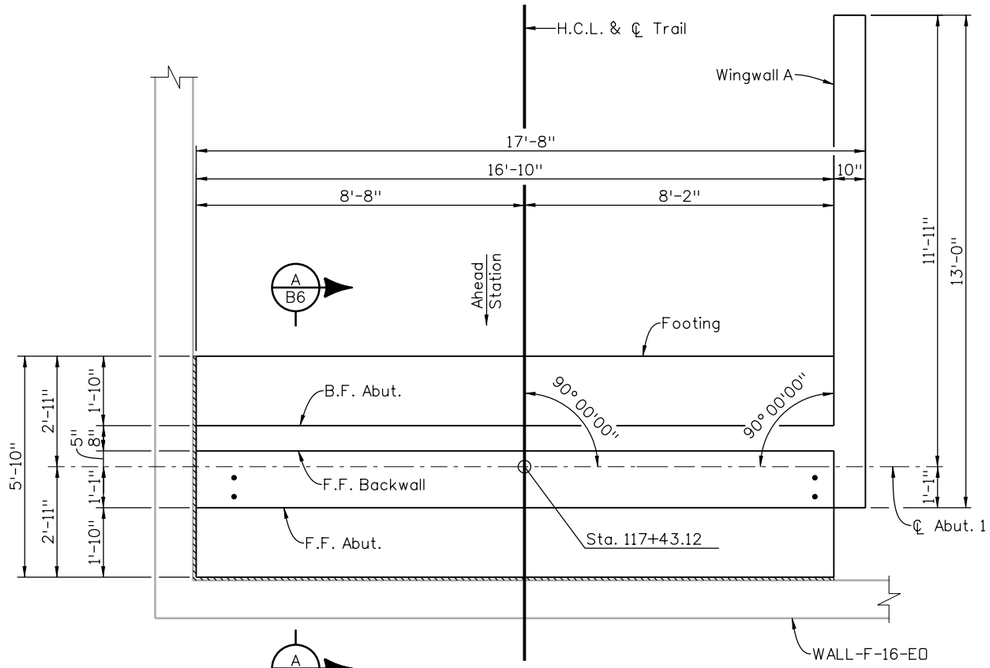

ABUTMENT 1 PLAN

(Abut. 2 Dimensions Similar)

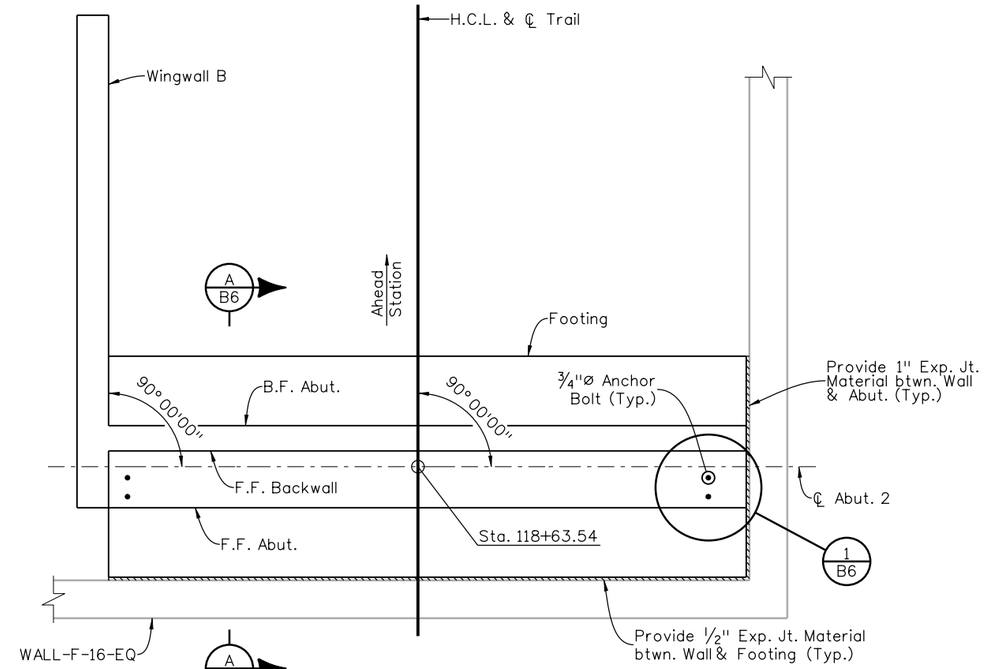

ABUTMENT 2 PLAN

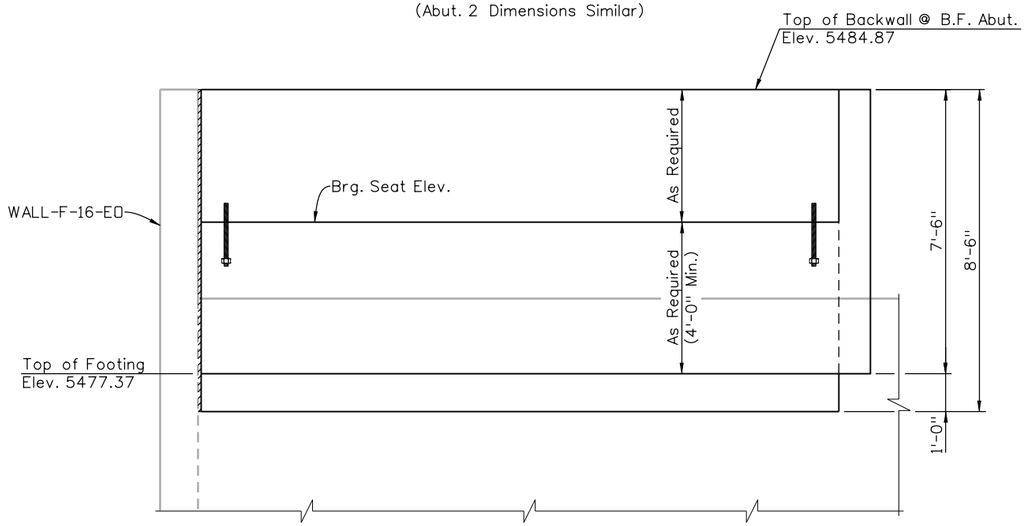

ABUTMENT 1 ELEVATION

(Abut. 2 Dimensions Similar)

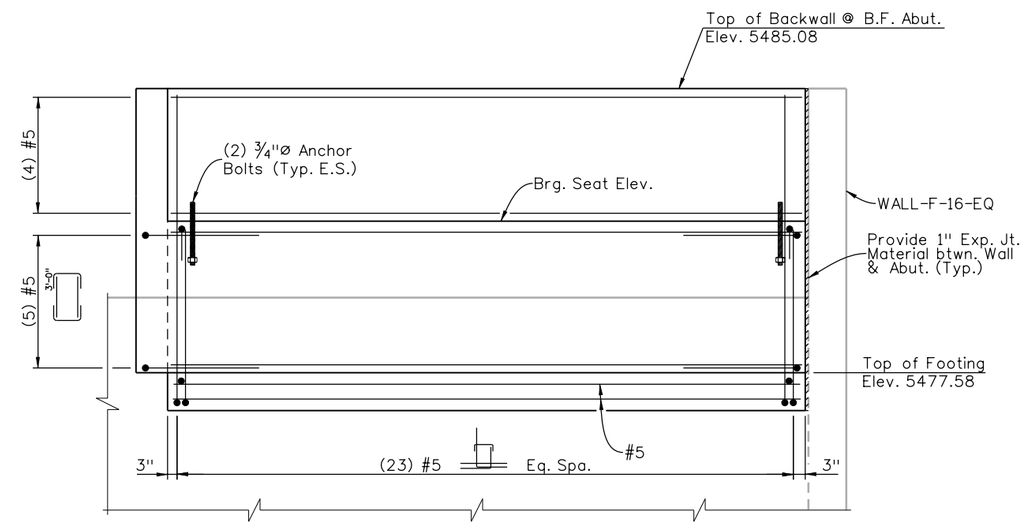

ABUTMENT 2 ELEVATION

(Wingwall Reinf. not shown, Abut. 1 Reinf. Similar)

Design			Detail			Quantities		
	INITIAL	DATE		INITIAL	DATE		INITIAL	DATE
Designed By	TRJ	12/09	Detailed By	RGA	12/09	Quantities By	TRJ	12/09
Checked By	BJA	12/09	Checked By	BJA	12/09	Checked By	BJA	12/09

BJAllen 10:29:12 AM M:\TRN\07-100-311-12\14679\Bridge\Drawings\Ped Bridge\14679_Abut_Det_01.dgn

Print Date: 1/14/2010
File Name: 14679_Abut_Det_01.dgn
Horiz. Scale: 1:1 Vert. Scale: As Noted
Unit Information 0224 Unit Leader MH

WILSON & COMPANY Engineers & Architects
999 18TH STREET, SUITE 2600
DENVER, CO 80202
PHONE: 303-297-2976
FAX: 303-297-2983

Sheet Revisions		
Date:	Comments	Init.

Colorado Department of Transportation
8833 South Wadsworth Court
Littleton, CO 80128
Phone: 303-972-9112 FAX: 303-972-9114
Region 6 RLB

As Constructed
No Revisions:
Revised:
Void:

TRAIL OVER ERICKSON
ABUTMENT DETAILS (1 OF 2)

Designer:	T. Johnson	Structure Numbers	F-16-WZ
Detailer:	R. Artman		
Sheet Subset:	Bridge	Subset Sheets:	B5 of B7

Project No./Code
ES6 0852-103
17679
Sheet Number 292

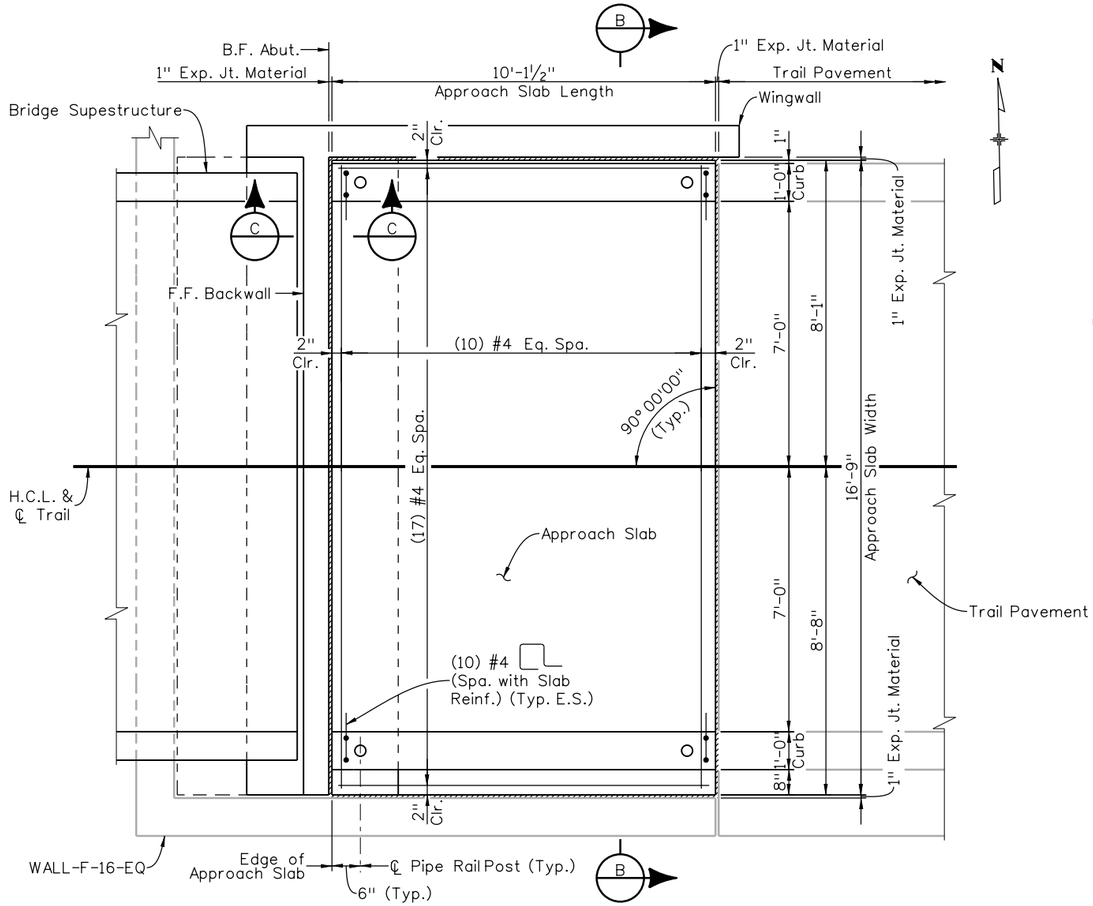

ABUTMENT 2 PLAN

(Abut. 1 Similar)

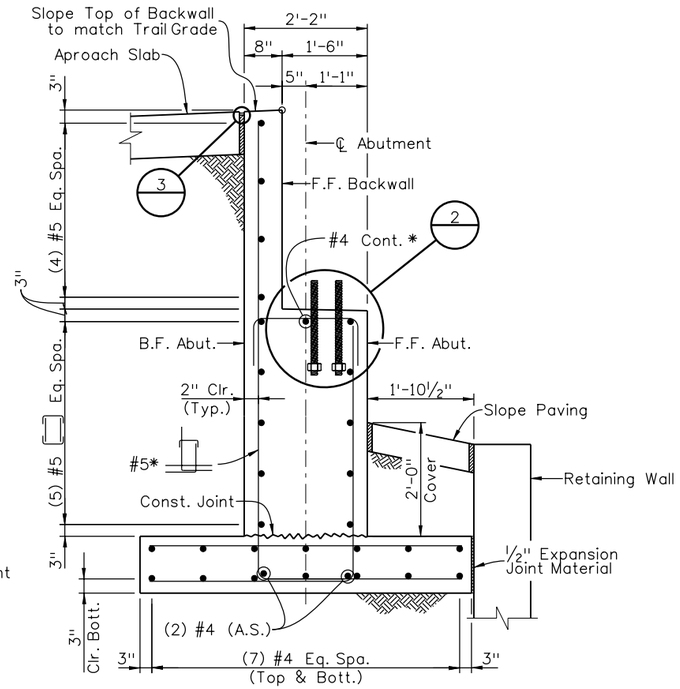

SECTION A/B5

(Bridge Superstructure Not Shown)

* Adjust Reinf. as necessary to avoid Anchor Bolts

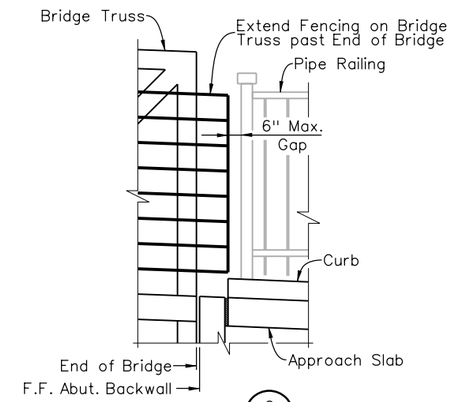

SECTION C

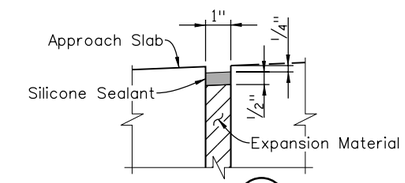

DETAIL 3

(Typ. all sides of Approach Slab)

NOTES:

1. Abutment, wingwall and approach slab concrete shall be Class D (Bridge), f'c = 4,500 psi.
2. The Contractor shall be responsible for determining the bearing seat elevation. This elevation shall be shown on the shop drawings.
3. The Contractor shall be responsible for determining the required projection of the anchor bolts. This dimension shall be shown on the shop drawings.
4. All anchor bolts shall be supplied with a nut and jam nut for securing the bridge superstructure.
5. Anchor bolts and nuts shall be galvanized after fabrication in accordance with ASTM A153.
6. See Wingwall Details for wingwall reinforcement.
7. See Structure F-16-WY, Flyover Ramp over Erickson for Slope Paving Details.
8. See Sheets W52 & W53 for Pipe Railing details.

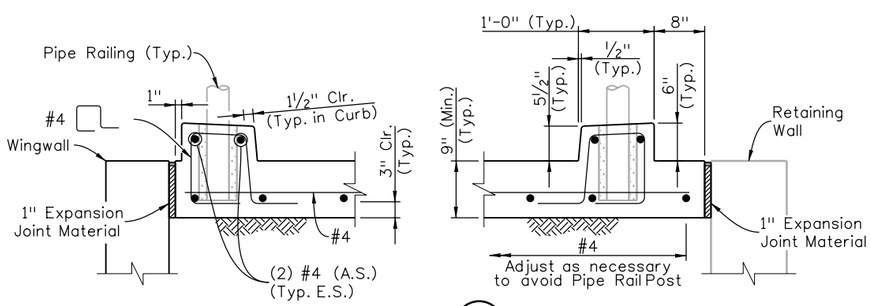

SECTION B

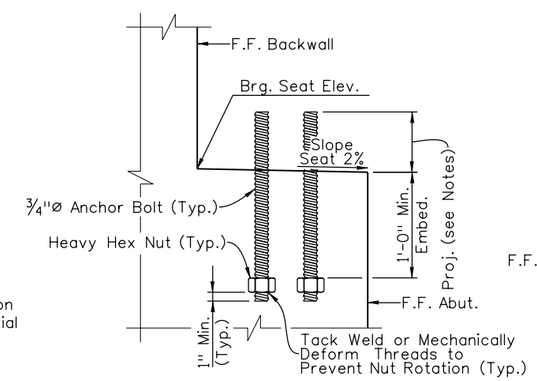

DETAIL 2

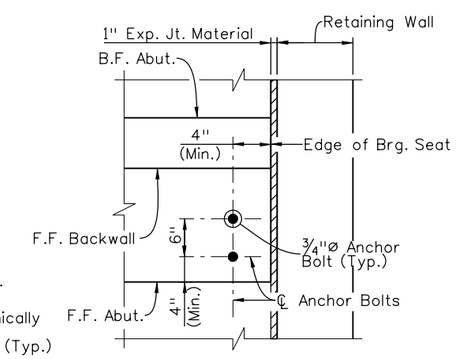

DETAIL 1/B5

(Typ. All Anchor Bolt Locations)

Design				Detail				Quantities		
	INITIAL	DATE		INITIAL	DATE		INITIAL	DATE
Designed By	TRJ	12/09	Detailed By	RGA	12/09	Quantities By	TRJ	12/09
Checked By	BJA	12/09	Checked By	BJA	12/09	Checked By	BJA	12/09

BJAllen 10:31:22 AM M:\TRN\07-100-311-12\14679\Bridge\Drawings\Ped Bridge\14679_Abut_Det_02.dgn

Print Date: 1/14/2010	Sheet Revisions		Colorado Department of Transportation	As Constructed	TRAIL OVER ERICKSON ABUTMENT DETAILS (2 OF 2)	Project No./Code
File Name: 14679_Abut_Det_02.dgn	Date: / Comments / Init.		8833 South Wadsworth Court Littleton, CO 80128 Phone: 303-972-9112 FAX: 303-972-9114	No Revisions:	Designer: T. Johnson; Structure Numbers: F-16-WZ	ES6 0852-103
Horiz. Scale: 1:1 Vert. Scale: As Noted			Region 6 RLB	Revised:	Detailer: R. Artman	17679
Unit Information 0224 Unit Leader MH				Void:	Sheet Subset: Bridge; Subset Sheets: B6 of B7	Sheet Number 293

WILSON & COMPANY Engineers & Architects 999 18TH STREET, SUITE 2800 DENVER, CO 80202 PHONE: 303-297-2976 FAX: 303-297-2983

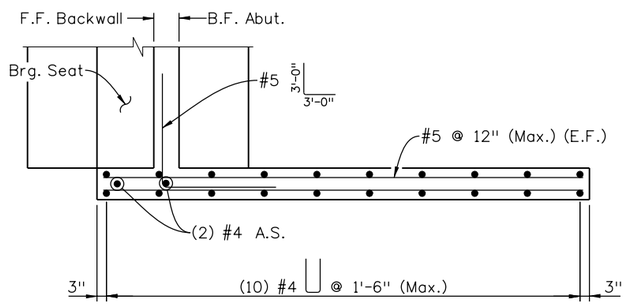

WINGWALL A - PLAN
(Abutment Reinf. not shown)

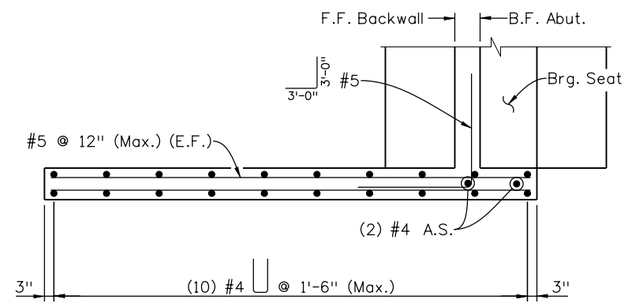

WINGWALL B - PLAN
(Abutment Reinf. not shown)

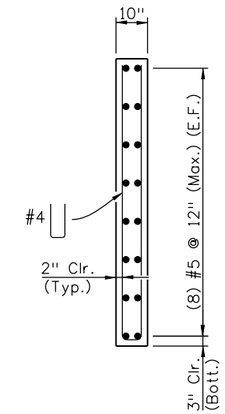

SECTION A

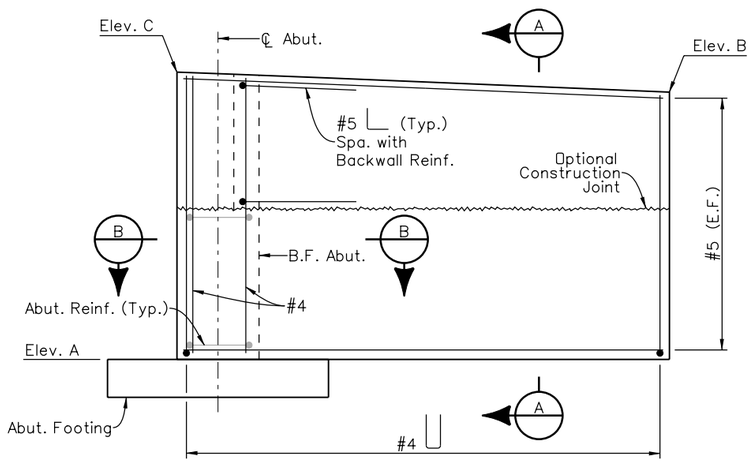

WINGWALL A - ELEVATION
(Footing Reinf. not shown)

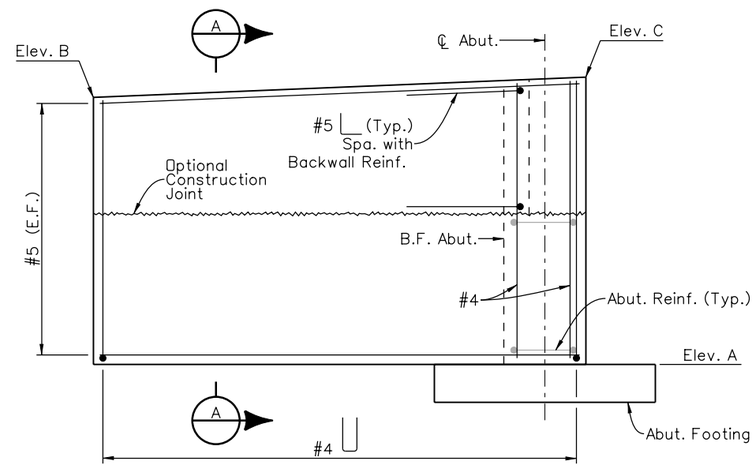

WINGWALL B - ELEVATION
(Footing Reinf. not shown)

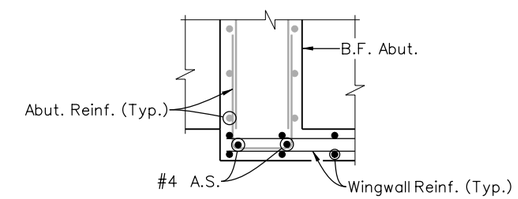

SECTION B
(Wingwall B Similar)

TABLE OF ELEVATIONS			
Wingwall	Elev. A	Elev. B	Elev. C
A	5477.37	5484.42	5484.96
B	5477.58	5484.63	5485.17

Quantities			
	INITIAL	DATE	
Quantities By	TRJ	12/09	
Checked By	BJA	12/09	

Detail			
	INITIAL	DATE	
Detailed By	RGA	12/09	
Checked By	BJA	12/09	

Design			
	INITIAL	DATE	
Designed By	TRJ	12/09	
Checked By	BJA	12/09	

BJAllen 10:31:54 AM M:\TRN\07-100-311-12\14679\Bridge\Drawings\Ped Bridge\14679_Wingwall_01.dgn

Print Date: 1/14/2010
File Name: 14679_Wingwall_01.dgn
Horiz. Scale: 1:1 Vert. Scale: As Noted
Unit Information 0224 Unit Leader MH

WILSON & COMPANY Engineers & Architects
999 16TH STREET, SUITE 2600
DENVER, CO 80202
PHONE: 303-297-2976
FAX: 303-297-2983

Sheet Revisions		
Date:	Comments	Init.

Colorado Department of Transportation
DOT DEPARTMENT OF TRANSPORTATION
8833 South Wadsworth Court
Littleton, CO 80128
Phone: 303-972-9112 FAX: 303-972-9114
Region 6 RLB

As Constructed
No Revisions:
Revised:
Void:

TRAIL OVER ERICKSON
WINGWALL DETAILS

Designer:	T. Johnson	Structure Numbers	F-16-WZ
Detailer:	R. Artman		
Sheet Subset:	Bridge	Subset Sheets:	B7 of B7

Project No./Code
ES6 0852-103
17679
Sheet Number 294