REVISIONS

AS CONSTRUCTED
REVISED DATE NOV 1 6 1968

FEDERAL ROAD REGION No.	DIVISION	PROJECT No.	SHEET No.
9	COLORADO	CC 10-0075-05	5

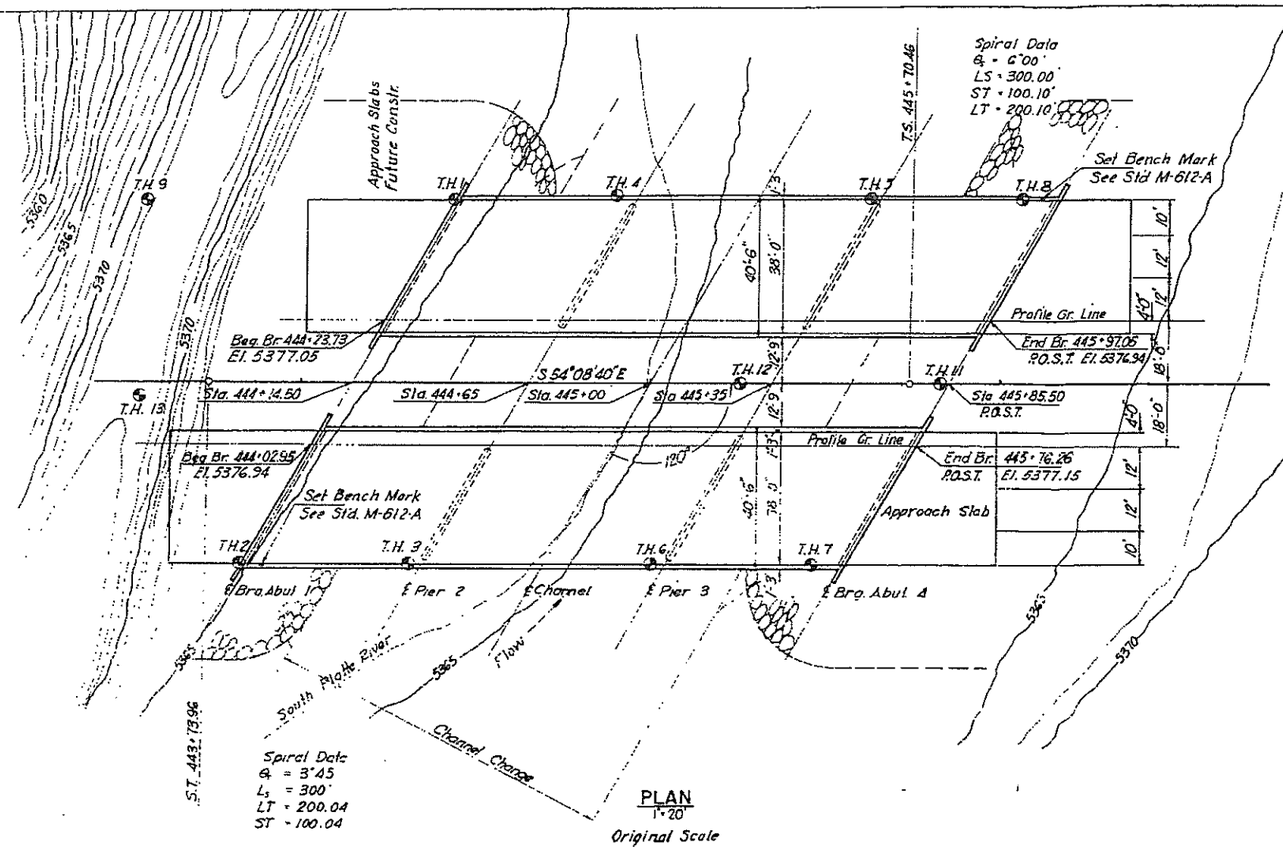

PLAN
1"=20'
Original Scale

Item	Description	Unit	Super struct.	Abut. No. 1	Pier No. 2	Pier No. 3	Abut. No. 4	Total
206	Structure Excavation	Cu. Yd.		56.67	56.65	56.65	56.67	226.7
206	Structure Backfill (Class 3)	Cu. Yd.		18	214.15	214.15	18	464.17
③ 502	Steel Piling 10 BP 42	L.F.		295	495	495	295	1400
506	Heavy Riprap	Cu. Yd.		135	280	280	135	830
① 509	Structural Steel (Galv.)	L.S.				1392		L.S.
513	Drain Pipe (4" ϕ x 1'-0")	Ea.	6	728		728	560	6
516	Dampproofing (Linseed Oil)	S.Y.	843	356.6			382	1581.6
601	Concrete Class "D"	Cu. Yd.	384	12.7			12.7	384
601	Concrete Class "A"	Cu. Yd.		145	49.0	49.0	145	388
602	Reinf. Steel	Lbs.	101,383	1009	3382	3382	1009	110,165
②	½" Exp. Jt. Matl. AASHO M-153-54 Type III	Sq. Ft.			65	65		130

① Design Weight 11,650 Lbs.
② To be included in Bid Price for Item 601 - Concrete
③ 10 WF 45 may be used in lieu of 10 BP 42.

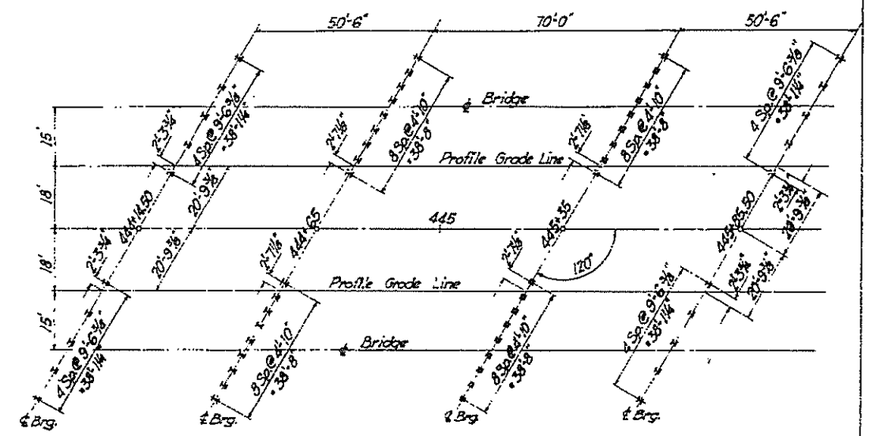

PILE STAKING DIAGRAM
Schematic

River Data:
Design Flow 5000 C.F.S.
Waterway Area 508 S.F. (Interim constr. to M.H.W.)
Channel Slope 0.0015%

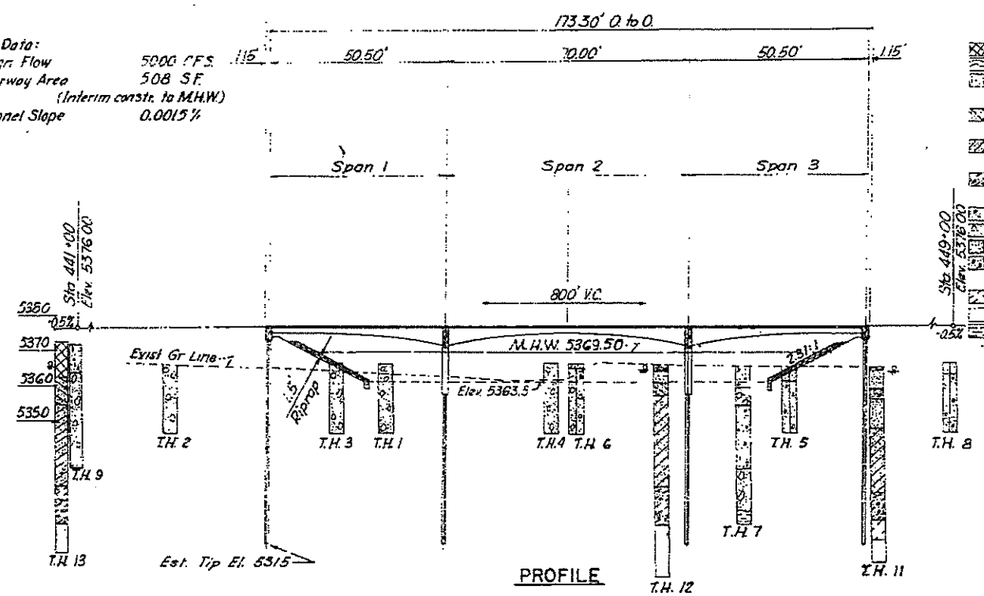

PROFILE

TEST HOLE DATA

- Fill, loose, silt and fine grained sand
- Topsoil
- Sand, Loose, medium to coarse grained clean to slightly silty, brown, with some fine gravel (SP).
- Sand, loose to very loose, silty, fine grained, wet, occasional gravel, gray to brown (SM).
- Sand loose, interlayed clean coarse grained and silty fine grained occasional coarse gravel, wet gray to tan (SP-SM).
- Gravel, medium, dense to dense, sandy, clayey to clean, fine to coarse, wet, tan to brown (GC-GP)
- Sand and gravel
- Sand and gravel, few small 3-4 in. cobbles
- Sand, coarse, saturated
- Sand and gravel, coarse, saturated and small rocks (3-5 in. boulders)
- Claystone, sandstone interlayed medium hard, gray
- Claystone, sandstone, same as above but hard to very hard
- Shale
- Free water level and number of hours after drilling that measurement was taken
- Gradual change in materials, exact strata change is not located

FEB 1968 BRIDGE SECT. B. O. H.

Reviewed P.C. 2-8-68

GENERAL NOTES

All work shall be done according to the Standard Specifications of the Colorado Department of Highways applicable to the project.

All concrete shall be Class "A" or Class "D".

All reinforcing steel shall be intermediate grade steel of a deformed type. Each bar shall be tagged with the bar designation and station number of the project.

If by permission of the Engineer primary bars are spliced, they shall lap a minimum of 40 diameters for bars near tops of beams having more than 12 inches of concrete under the bars, and 24 diameters for bars near bottom of members. Secondary bars when spliced shall lap 24 diameters of the bar.

Dimensions for reinforcing steel not shown as clear shall be to the centerline of the bar.

Soundings and depth of footings are in accordance with the best available data and when different conditions are encountered the Bridge Engineer will inspect and determine if redesign is necessary.

For details of structural excavation and structure backfill, see Standard M-206-A.

All concrete surfaces marked with the symbol ℄ as shown on Sheet No. 12 shall receive Class "2" Surface Finish.

All corners to be chamfered ¾" unless otherwise noted.

LOADING DATA.
Live Load = A.A.S.H.O. HS 20-44
Dead Load = Assumes 15 lbs./sq. ft. additional wearing surface which includes the ½ inch concrete monolithic wearing surface shown.

DESIGNING DATA.
A.A.S.H.O. 1965 Unit Stresses except as noted.
Reinf. steel fs = 20,000 lbs/sq. in.

Concrete fc = 1200 lbs./sq. in
n = 10

Beg. Br. 444+23.73 - End Br. 445+97.05
Beg. Br. 444+02.95 - End Br. 445+76.26

SBL F-16-HV
NBL F-16-HW

COLORADO
DEPARTMENT OF HIGHWAYS
3 SPAN CONTINUOUS
(50'-6" — 70'-0" — 50'-6")
CONC. SLAB & GIRDER
38' RDWY. 1'-3" CURB 60° SKEW
Across South Platte River
Sta. 445+00
Near Littleton Sec. 31 T. 5S R. 68W

Designed by B.S.M.H.	Approved by
Made by L.J.S.	Bridge Engineer
Checked by W.A.H.	Date 19

REVISIONS

FEDERAL ROAD REGION No.	DIVISION	PROJECT No.	SHEET No.
7	COLORADO	CC 10-0075-05	6

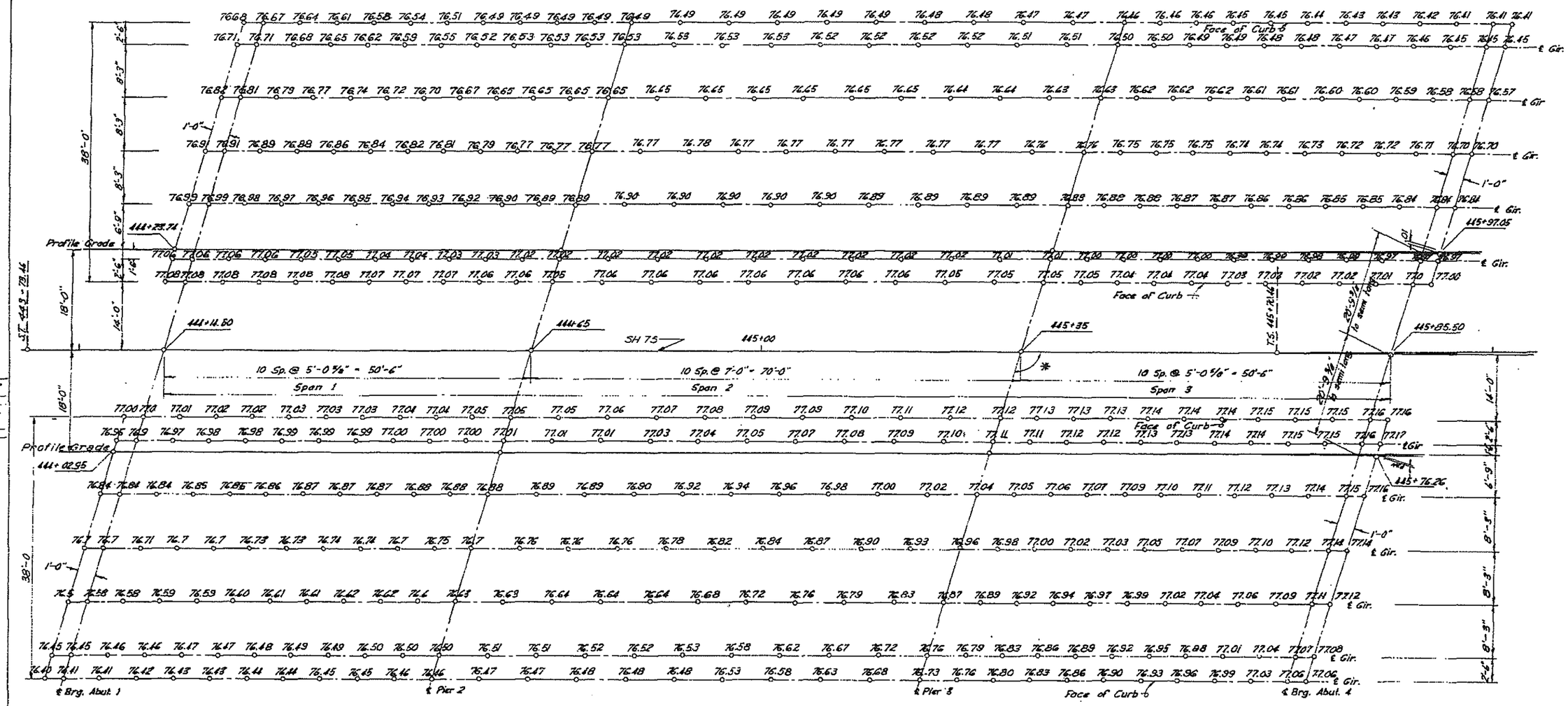

ERECTION DIAGRAM

Finish Grade Elevations on Deck

* Note: SCHEMATIC DIAGRAM ONLY - Not to scale or skew angle.

STRUCTURE NO. SBL F-16-HV
NBL F-16-HW

COLORADO
DEPARTMENT OF HIGHWAYS

ERECTION DIAGRAM

Across So. Platte River Sta. 445+00
Near Littleton Sec. 31 T. 5 S. R. 68 W.

Designed by B.S.H.H.
Made by D.J.V.
Checked by
Approved by Bridge Engineer
Date: 19

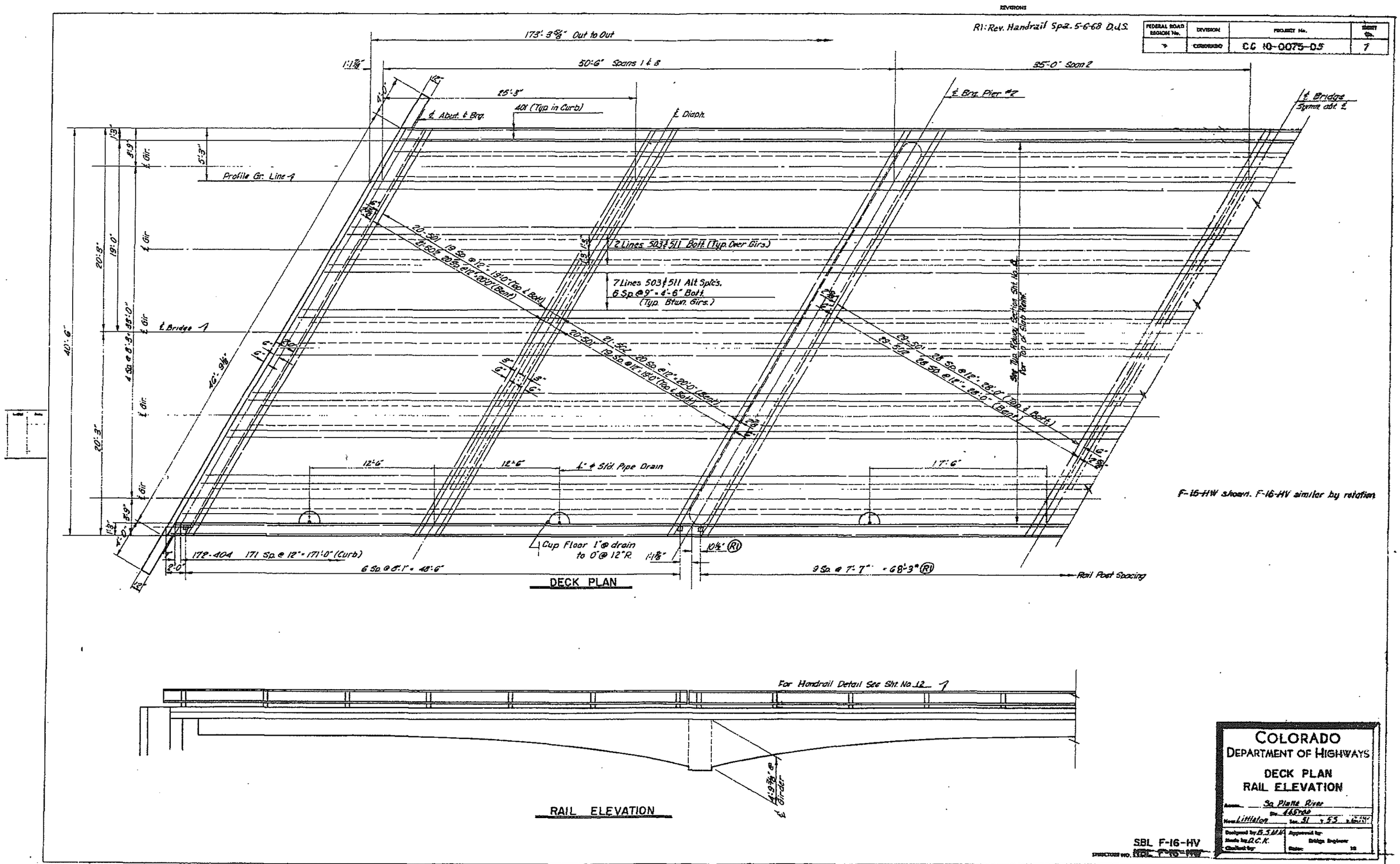

REVISIONS
R1: Rev. Handrail Spa. 5-6-68 D.J.S.
FEDERAL ROAD REGION No.
DIVISION
PROJECT No.
SHEET No.
CC 10-0075-D5
7
173'-3 5/8" Out to Out
50'-6" Spans 1 & 3
35'-0" Span 2
25'-3"
401 (Typ. in Curb)
℄ Abut. & Brg.
℄ Diaph.
℄ Brg. Pier #2
℄ Bridge Symm. abt. ℄
Profile Gr. Line
2 Lines 503 & 511 Bott. (Typ. Over Girs.)
7 Lines 503 & 511 Alt. Splc's.
6 Sp. @ 9" = 4'-6" Bott.
(Typ. Btwn. Girs.)
℄ Bridge
See Typ. Railway Section Sht. No. 8 for Top of Slab Reinf.
12'-6"
12'-6"
4" ϕ Std. Pipe Drain
17'-6"
F-16-HW shown. F-16-HV similar by rotation
Cup Floor 1" ϕ drain to 0" @ 12" R.
172-404 171 Sp. @ 12" = 171'-0" (Curb)
6 Sp. @ 8'-1" = 48'-6"
9 Sp. @ 7'-7" = 68'-3" (R1)
Rail Post Spacing
DECK PLAN
For Handrail Detail See Sht. No. 12
RAIL ELEVATION
COLORADO
DEPARTMENT OF HIGHWAYS
DECK PLAN
RAIL ELEVATION
Sq. Platte River
Littleton
SBL F-16-HV

115-1

REVISIONS

FEDERAL ROAD REGION No.	DIVISION	PROJECT No.	SHEET No.
9	COLORADO	CC 10-0075-05	8

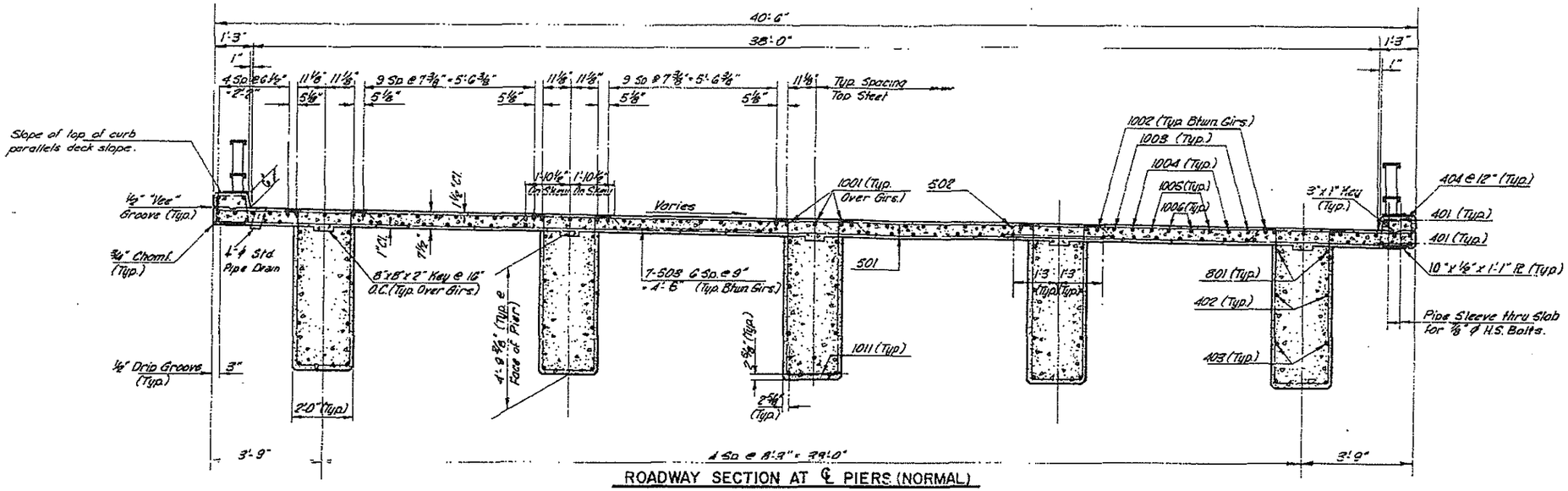

ROADWAY SECTION AT ℄ PIERS (NORMAL)

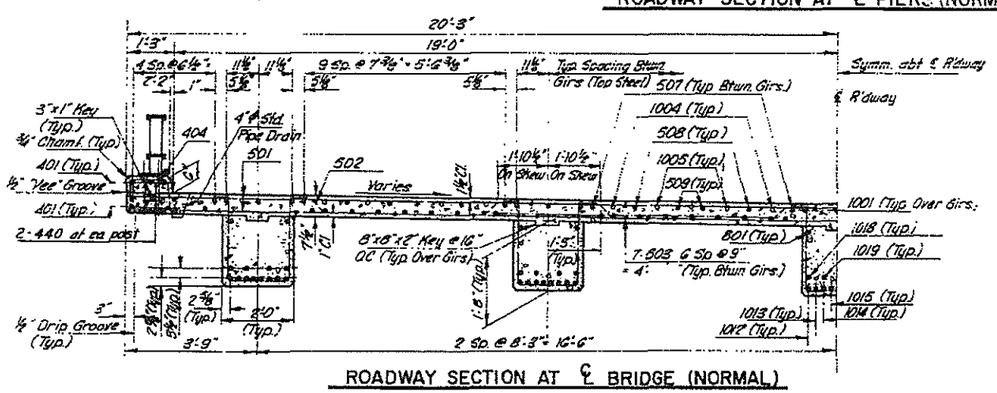

ROADWAY SECTION AT ℄ BRIDGE (NORMAL)

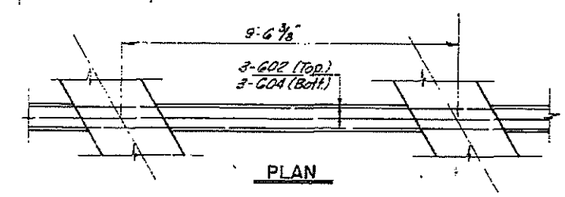

PLAN

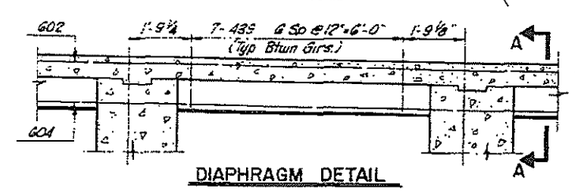

DIAPHRAGM DETAIL

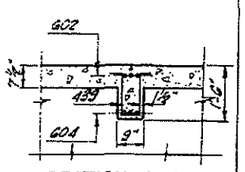

SECTION A-A

SBL F-16-HV
STRUCTURE NO. NBL F-16-HW

COLORADO
DEPARTMENT OF HIGHWAYS
TYPICAL SECTIONS

Area: South Platte River
Near: Littleton Sta. 445+00
Sec. 31 T. 5S R. 68W

Designed by B.S.M.H.
Made by D.C.K.
Checked by
Approved by
Bridge Engineer
Date: 19

REVISIONS

FEDERAL ROAD REGION No.	DIVISION	PROJECT No.	SHEET No.
9	COLORADO	CC 10-0075-05	9

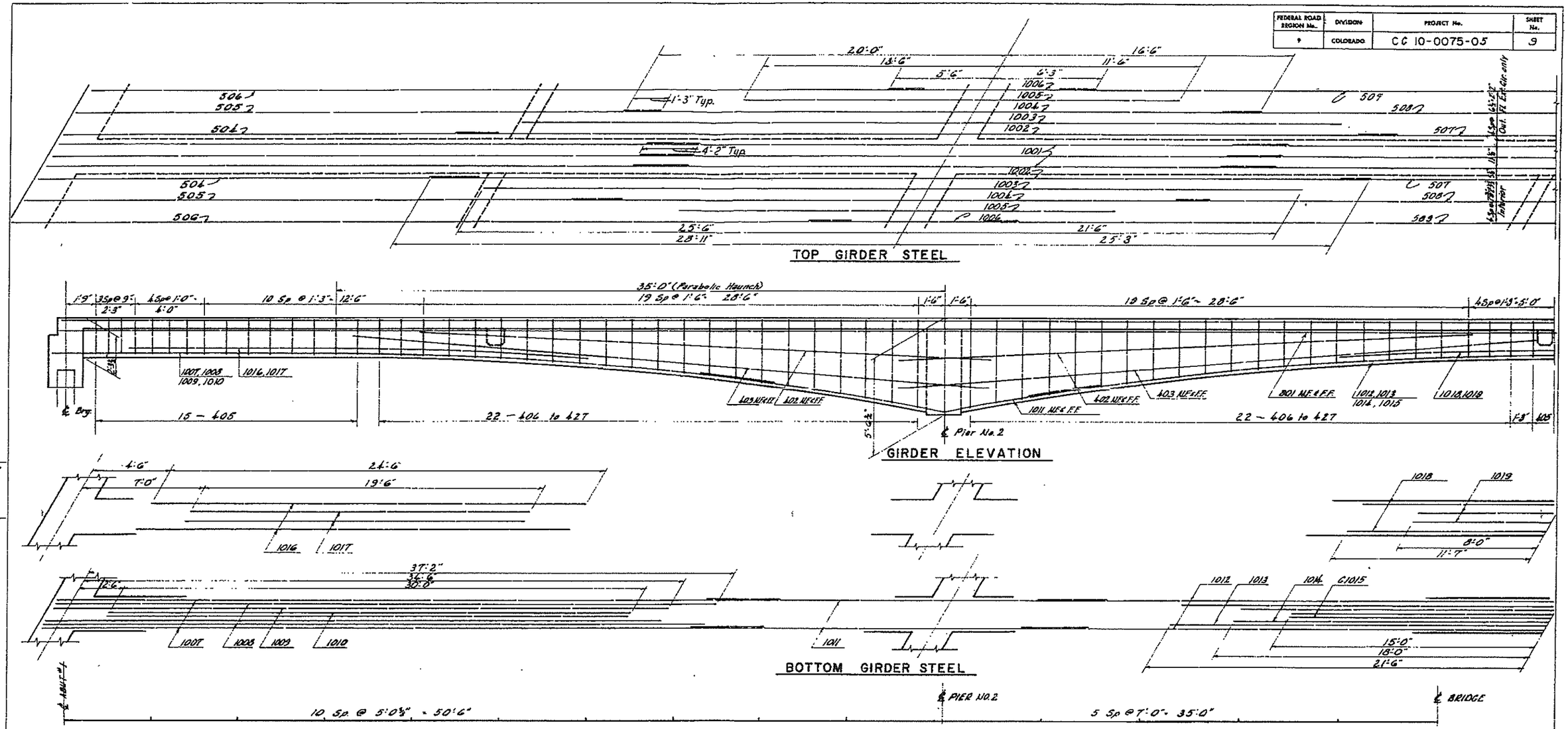

2'-3½"	2'-3½"	2'-3½"	2'-3½"	2'-4¾"	2'-6⅝"	2'-10⅝"	3'-4⅝"	3'-11¾"	4'-8¾"	5'-6½"	4'-5⅛"	3'-5⅞"	2'-9⅞"	2'-5⅛"	2'-3½"
	0.155"	0.273"	0.335"	0.332"	0.276"	0.195"	0.113"	0.049"	0.012"		0.027"	0.106"	0.225"	0.342"	0.394"

Dist. fr. Top of Slab to Bolt of Girder
D.L. Δ Correction

Notes:
Girder shoring shall remain in place full length until all pours have reached a min. strength of 2,400 p.s.i., and the slab shall not be poured until the Girder pours have reached a min strength of 2,400 p.s.i.

COLORADO
DEPARTMENT OF HIGHWAYS
GIRDERS

Across South Platte River
Sta. 445+00
Near Littleton Sec. 31 T. 5S R. 68W

Designed by B.S.M.H.
Made by D.D.L.
Checked by
Approved by
Bridge Engineer
Date: 19

SBL F-16-HV
STRUCTURE NO. NBL F-16-HW

REVISIONS

FEDERAL ROAD REGION No.	DIVISION	PROJECT No.	SHEET No.
9	COLORADO	CC 10-0075-05	10

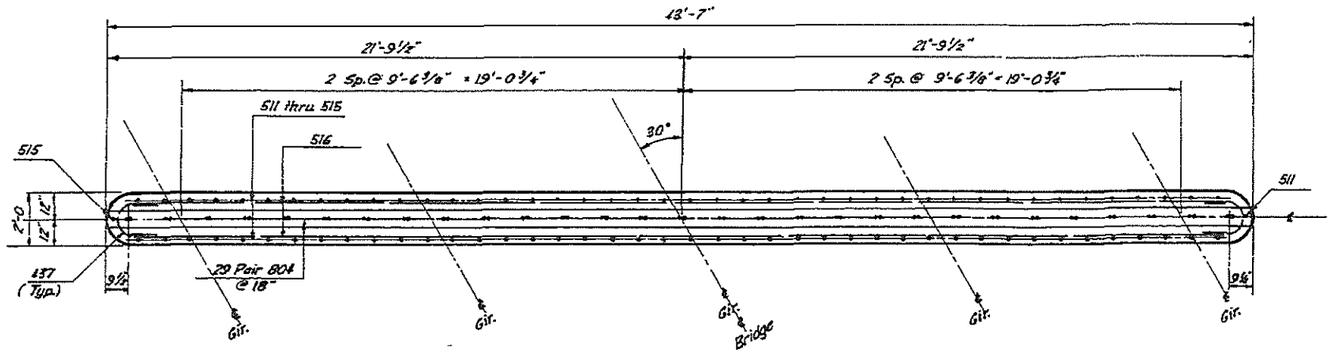

PLAN

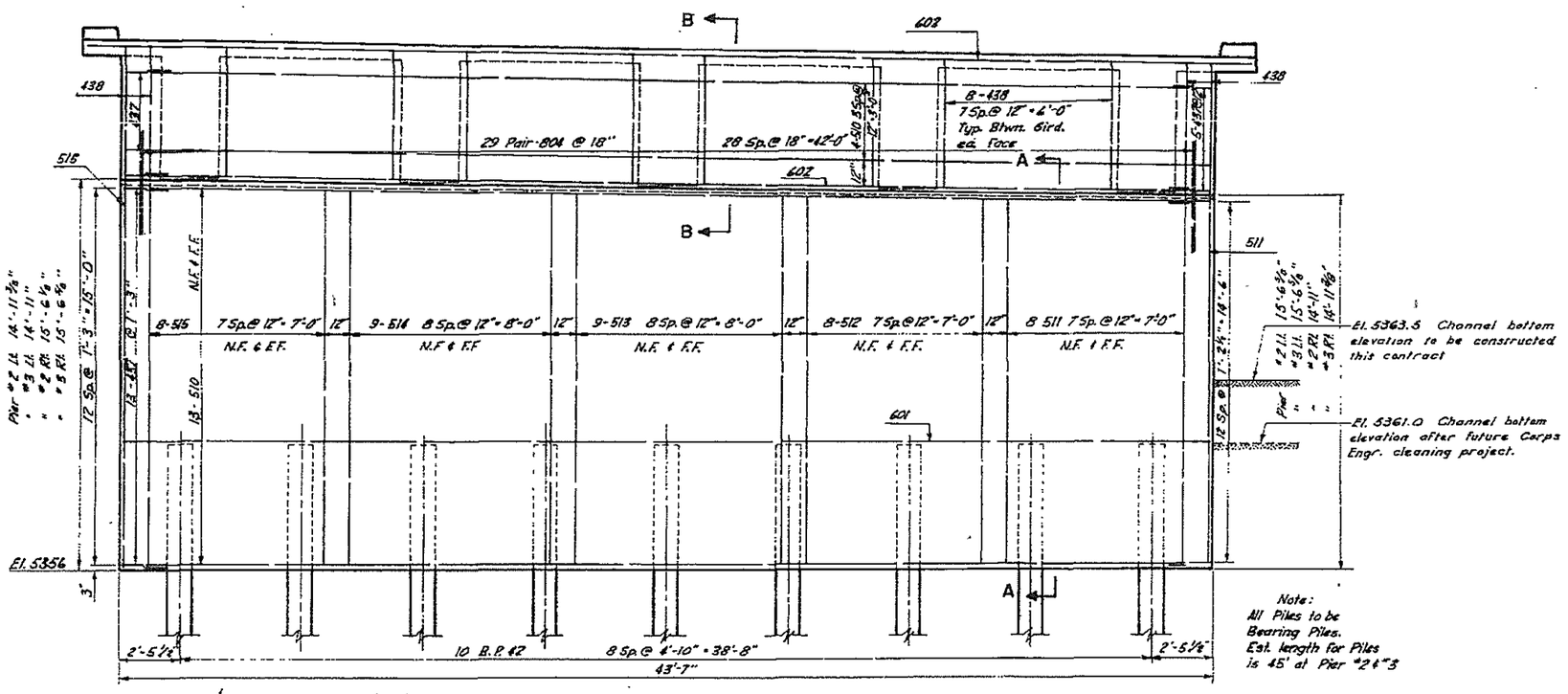

TYP. ELEVATION PIER NOS. 2 & 3

Note:
All Piles to be Bearing Piles.
Est. length for Piles is 45' at Pier #2 & #3

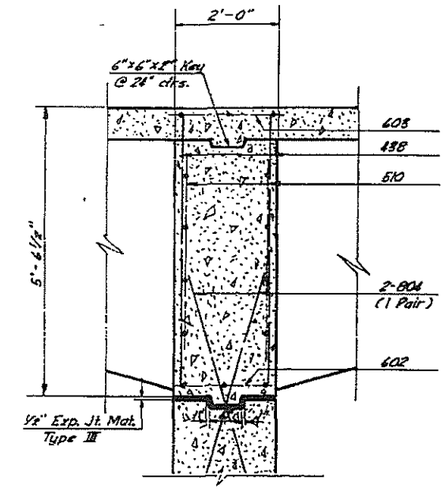

SECTION B – B

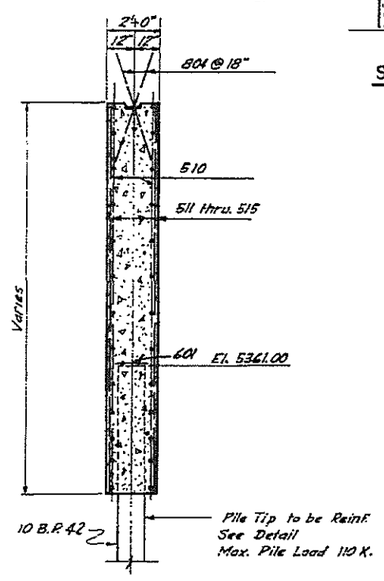

SECTION A – A

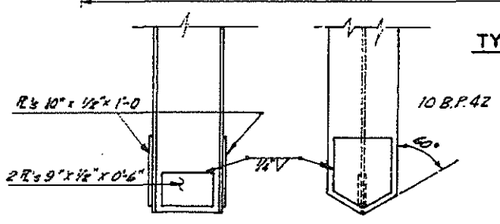

PILE TIP REINFORCEMENT

Cost of pile reinforcement to be included in unit bid price of Item 502.

SBL F-16-HV
STRUCTURE NO. NBL F-16-HW

COLORADO
DEPARTMENT OF HIGHWAYS

PIERS

Across South Platte River Sta. 465+00
Near Littleton Sec. 31 T. 5S R. 68W

Designed by B.S.M.H. Approved by
Made by D.J.V. Bridge Engineer
Checked by Date: 19

FEDERAL ROAD REGION No.	DIVISION	PROJECT No.	SHEET No.
9	COLORADO	CC 10-0075-05	11

REVISIONS

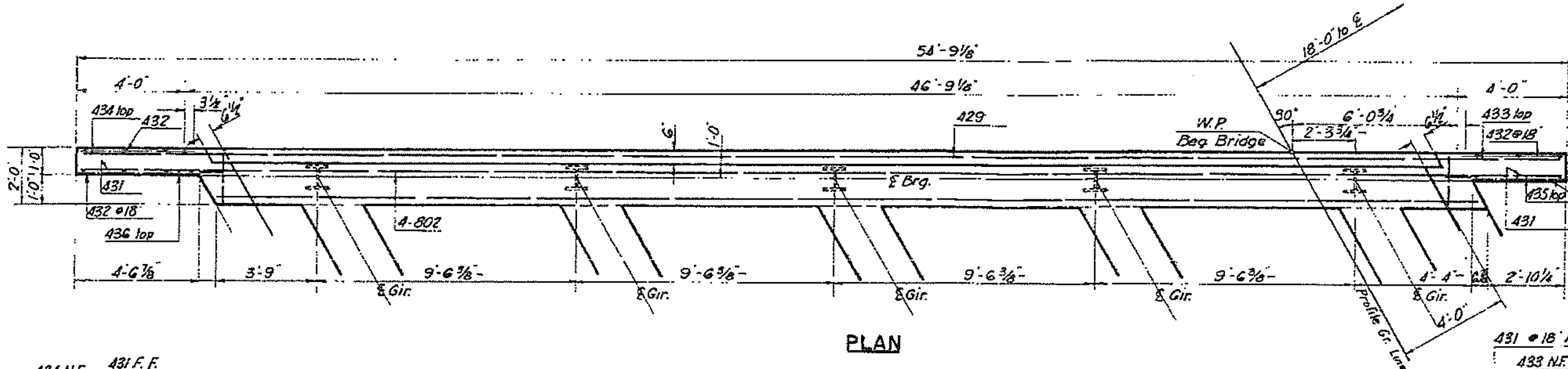

PLAN

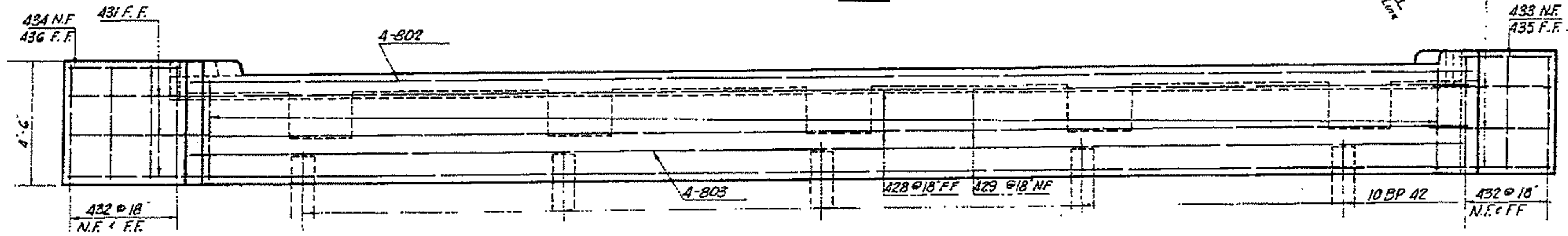

TYPICAL ELEVATION OF ABUTMENT

Abutment No. 1 Rt. Shown;
Abutment No. 1 Lt., No. 4 Rt. & No. 4 Lt., Similar

Note:
Abutment Cap & Girders to be Poured Monolithic.

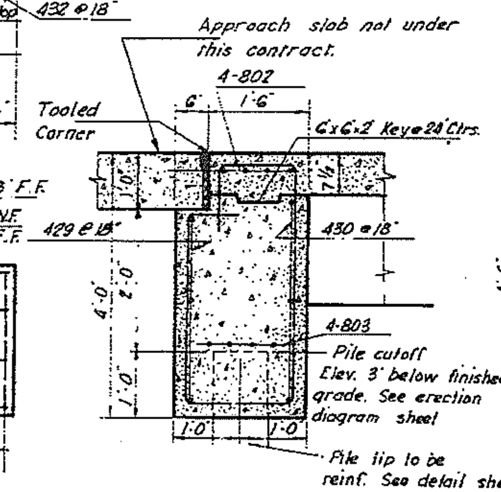

SECTION THRU ABUTMENT

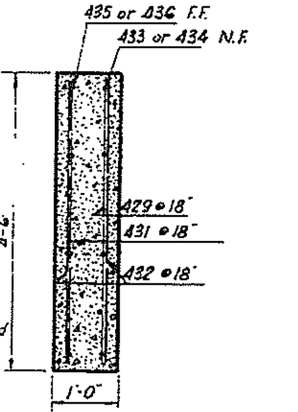

TYP. WING WALL SECTION

Note:
All Piles to be bearing Piles
Estimated length for Piles 59 ft
Max. Pile load 99 K

BENDING DIAGRAMS (Dimensions are out to out of bars)

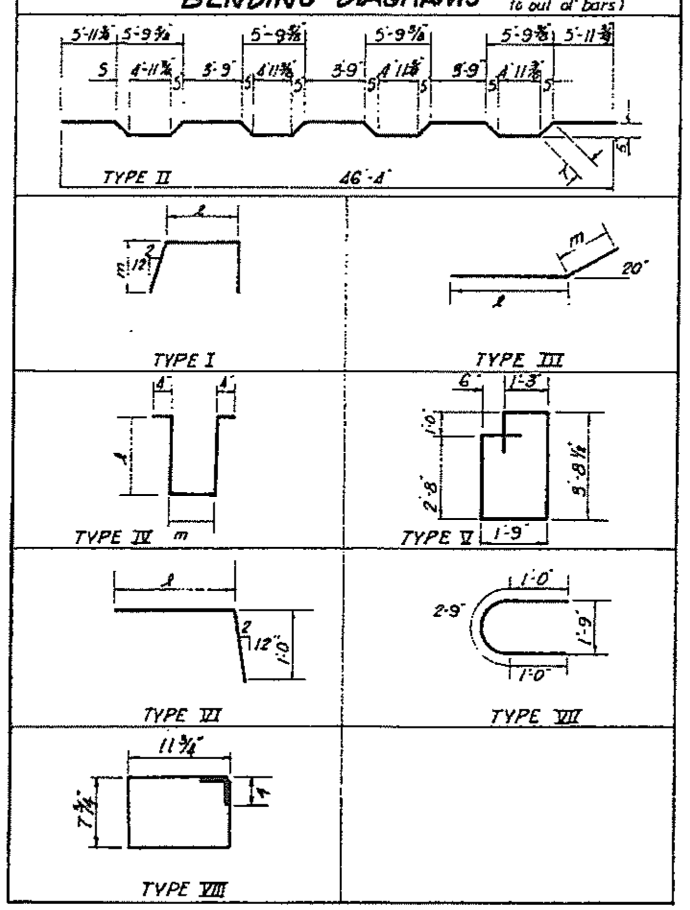

BAR LIST-SUPERSTRUCT. (2-Req'd)

Mark	Size	Length	No. Req'd	Type	Dimensions ℓ	Dimensions m
401	4	35'4"	40	Str		
402		33'0	40	Str		
403		36'0	40	Str		
404		2'-6	344	I	0'-11"	0'-10"
405		6'-5	160	IV	2'-0½	1'-9
406		6'-6	20	IV	2'-0¾	1'-9
407		6'-7	20	IV	2'-1"	1'-9
408		6'-7	20	IV	2'-1¼	1'-9
409		6'-9	20	IV	2'-2	1'-9
410		6'-10"	20	IV	2'-2½	1'-9
411		7'-0"	20	IV	2'-3½	1'-9
412		7'-2	20	IV	2'-4½	1'-9
413		7'-4	20	IV	2'-5¼	1'-9
414		7'-7	20	IV	2'-7	1'-9
415		7'-9	20	IV	2'-8¼	1'-9
416		8'-1	20	IV	2'-10	1'-9
417		8'-4	20	IV	2'-11¾	1'-9
418		8'-8	20	IV	3'-1½	1'-9
419		9'-0	20	IV	3'-3½	1'-9
420		9'-4"	20	IV	3'-5¾	1'-9
421		9'-9"	20	IV	3'-8	1'-9
422		10'-2	20	IV	3'-10½	1'-9
423		10'-7	20	IV	4'-1¼	1'-9
424		11'-1	20	IV	4'-4	1'-9
425		11'-7	20	IV	4'-7	1'-9
426		11'-11	20	IV	4'-9	1'-9
427		12'-7	20	IV	5'-1	1'-9
437		4'-9	20	VII		
438		5'3	144	Str		
439	4	3'-6	84	IV	1'-2¼	0'-6"
440	4	3'11"	96	VIII		
501	5	46'-4	276	Str.		
502		47'-8	142	II		
503		35'-4	95	Str.		
504		23'-0	20	Str.		
505	5	32'-0	20	Str.		

BAR LIST-SUPERSTRUCT. (Cont.)

Mark	Size	Length	No. Req'd	Type	Dimensions ℓ	Dimensions m
506	5	24'-0	40	Str		
507		22'-0"	10	Str		
508		39'-6	10	Str.		
509		30'-8	20	Str.		
510	5	41'-7	16	Str.		
511	5	18'-4	190	Str.		
602	6	41'-7	15	Str		
603	6	46'-4	6	Str.		
604	6	39'-7	9	Str.		
801	8	36'-6	50	Str.		
802	8	46'-4	8	Str.		
1001	10	37'-8"	75	Str.		
1002		34'-2"	20	Str		
1003		47'-0"	20	Str.		
1004		36'-6	20	Str.		
1005		25'-0"	20	Str.		
1006		11'-9	20	Str.		
1007		41'-0	20	Str.		
1008		38'-1	20	Str.		
1009		35'-5	20	Str.		
1010		30'-0	20	Str.		
1011		21'-10"	20	III	13'-11	7'-11
1012		60'-0	10	Str.		
1013		43'-0	10	Str		
1014		36'-0	10	Str.		
1015		30'-0	10	Str.		
1016		24'-6	20	Str.		
1017		19'-6	20	Str		
1018		23'-2	10	Str		
1019	10	16'-0	10	Str.		

BAR LIST-SUPERSTRUCT. (Cont)

Mark	Size	Length	No. Req'd	Type	Dimensions ℓ	Dimensions m

BAR SUMMARY

11404.333 Lin. Ft. #4 @ .668 P.L.F. = 7618
30477.000 Lin. Ft. #5 @ 1.043 P.L.F. = 31,788
1258.000 Lin. Ft. #6 @ 1.502 P.L.F. = 1890
2195.666 Lin. Ft. #8 @ 2.670 P.L.F. = 5862
12601.666 Lin. Ft. #10 @ 4.303 P.L.F. = 54225
Total = 101383

BAR LIST ABUT. (4 Req'd)

Mark	Size	Length	No. Req'd	Type	Dimensions ℓ	Dimensions m
428	4	23'-8"	6	Str.		
429		27'-10	6	Str.		
430		11'-6	31	V		
431		5'-7	6	Str.		
432		4'-2	12	Str		
433		4'-5	1	VI	3'-5½	
434		4'-7	1	VI	3'-7½	
435		5'-2	1	VI	4'-2½	
436	4	6'-9	1	VI	5'-9	
803	8	46'-4	4	Str.		

BAR SUMMARY

769.916 Lin. Ft. #4 @ .668 P.L.F. = 514
185.333 Lin. Ft. #8 @ 2.670 P.L.F. = 495
Total = 1009

BAR LIST-ONE PIER (4 Req'd)

Mark	Size	Length	No. Req'd	Type	Dimensions ℓ	Dimensions m
437	4	4'-9	76	VII		
510	5	41'-7	26	Str.		
511		14'-6	17	Str.		
512		14'-8	16	Str.		
513		14'-9	18	Str		
514		14'-11	18	Str.		
515	5	15'-0	17	Str		
601	6	41'-7	2	Str.		
804	8	4'-8	58	Str.		

BAR SUMMARY

123.500 Lin. Ft. #4 @ .668 P.L.F. = 82
7351.333 Lin. Ft. #5 @ 1.043 P.L.F. = 7452
83.166 Lin. Ft. #6 @ 1.502 P.L.F. = 125
270.666 Lin. Ft. #8 @ 2.670 P.L.F. = 723
Total = 3382

SBL F-16-HV
STRUCTURE NO. NBL F-16-HW

COLORADO
DEPARTMENT OF HIGHWAYS
ABUTMENTS
REINFORCING

Across South Platte River
Sta. 445+00
Near Littleton Sec. 31 T. 5S R. 68W

Designed by B.S.M.H. | Approved by
Made by L.J.S. | Bridge Engineer
Checked by | Date: 19

REVISIONS

FED. ROAD REG. NO.	DIVISION	PROJECT NO.	SHEET NO.	TOTAL SHEETS
9	COLO.	CC-10-0075-05	12	24

R1: Rev Handrail Spa. 5-6-68 D.J.S.

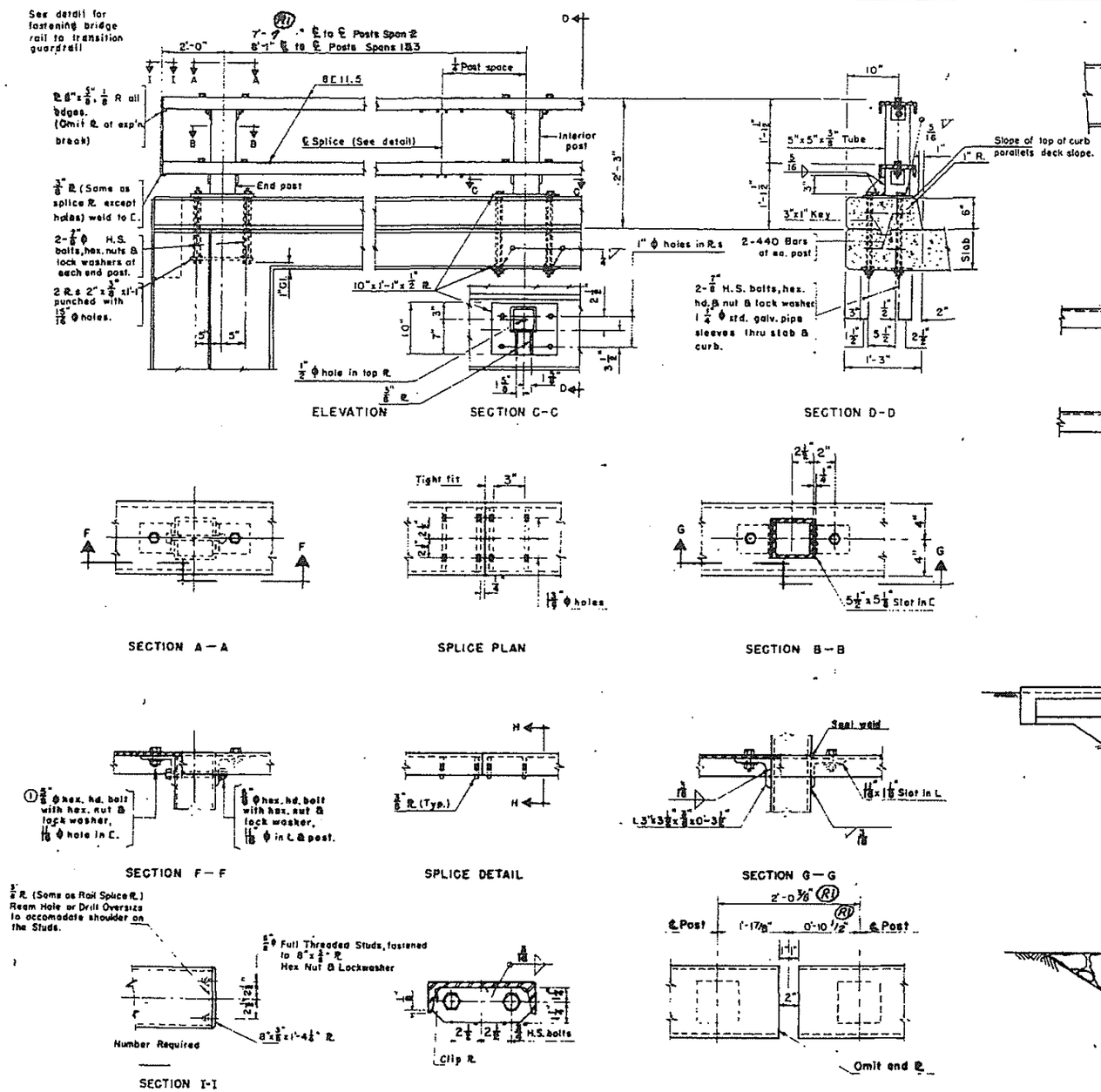

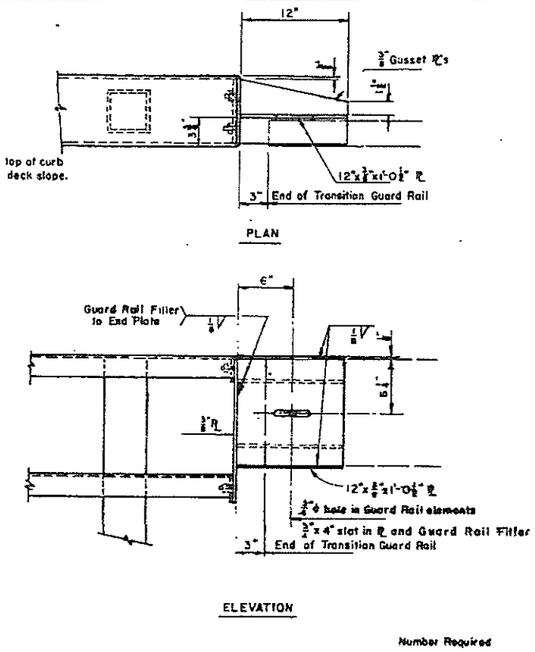

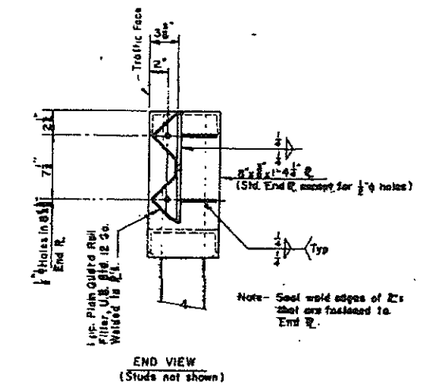

DETAILS OF END CONNECTION FOR FASTENING BRIDGE RAIL TO TRANSITION GUARD RAIL

(Complete Unit to be Galvanized after fabrication)
Detail Shown is For Right Hand Rail
Opposite Hand For Left Hand Rail

Notes.

Posts to be perpendicular to the grade and slope of deck.

All rail elements to be galvanized after fabrication in accordance with specifications.

A.I.S.I. 1144 steel rods may be used in lieu of H.S. bolts shown. 10" wedge test not required for either bolts or rods used in rail assembly.

① 5/8" ϕ standard full threaded studs welded to the channel may be used increase size of slot in the angle to 13/16"x1 1/4".

Channels to be continuous over 3 or 4 posts before splicing.

GALVANIZED STEEL HANDRAIL DETAILS

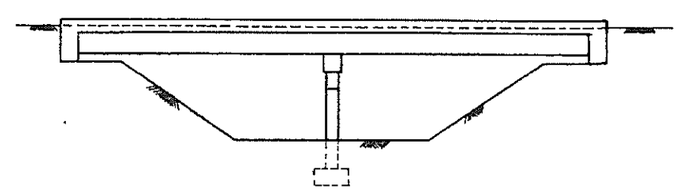

RURAL STREAM CROSSING

DETAILS SHOWING PORTIONS OF STRUCTURE TO RECEIVE CLASS 2 SURFACE FINISH.

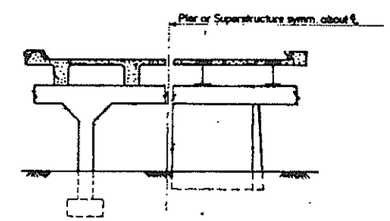

PIER AND SUPERSTRUCTURE

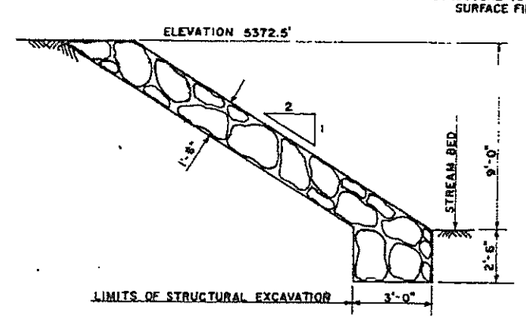

DETAIL OF RIPRAP WITH TOE

NOTES:
TRANSITION ENDS OF RIPRAP MAY BE MODIFIED BY THE ENGINEER TO FIT CONDITIONS ENCOUNTERED IN THE FIELD.

STRUCTURE NO. SBLF-16-HV / NBLF-16-HW

DEPARTMENT OF HIGHWAYS
STATE OF COLORADO

MISC. DETAILS

Across South Platte River
Sta. 445+00
Near Littleton Sec. 31 T. 5S R. 68W

Designed by	Approved by
Made by	Bridge Engineer
Checked by	Date: 19

FED. ROAD REG. NO.	DIVISION	PROJ. NO.	SHEET NO.	TOTAL SHEETS
9	COLO.	CC10-0075-05	19	240

AS CONSTRUCTED
REVISED DATE 11-16-68

FINAL CONSTRUCTION

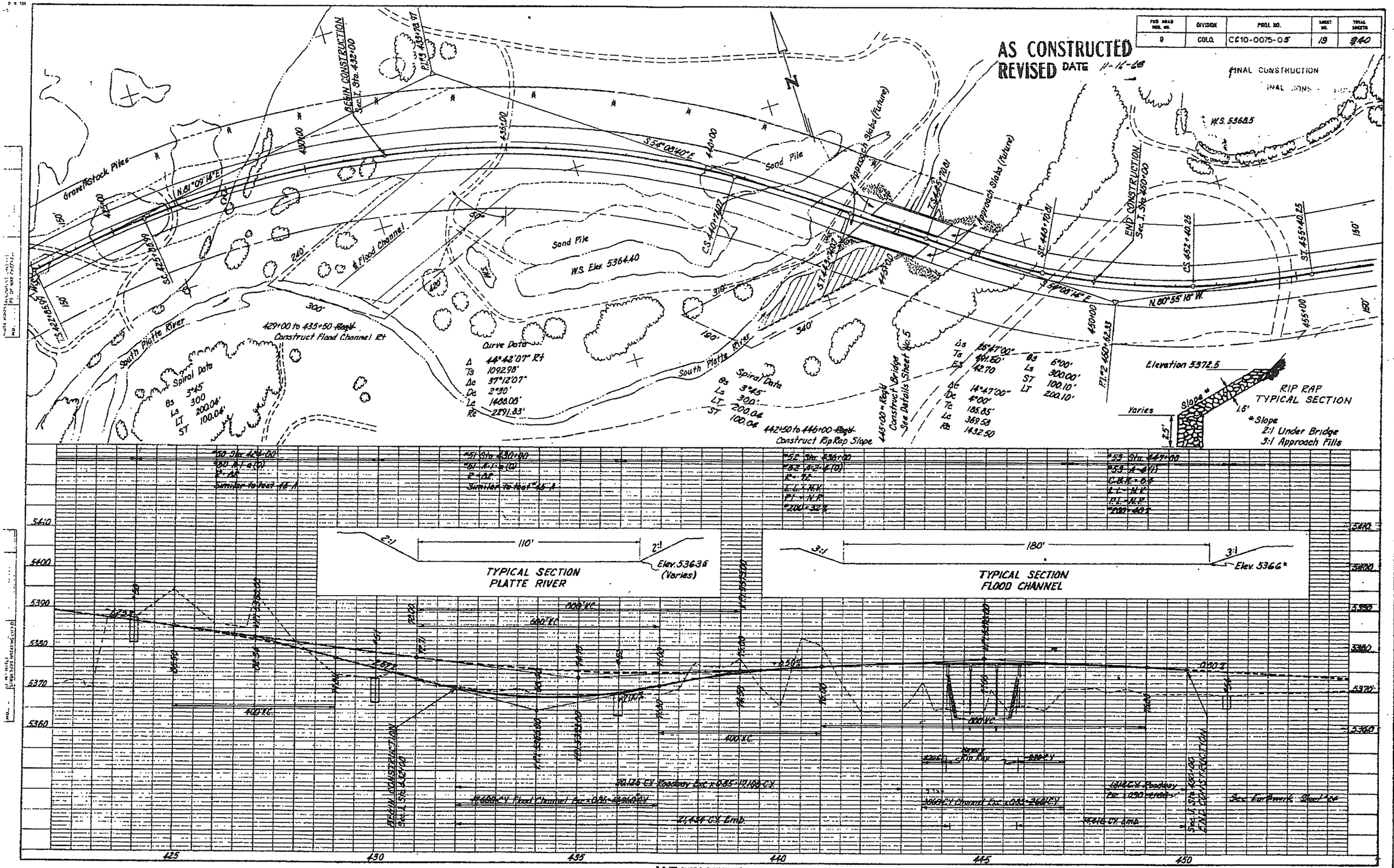

K+E PLATE 1, PLAN-PROFILE KEUFFEL & ESSER CO.

FED. ROAD REG. NO.	DIVISION	PROJ. NO.	SHEET NO.	TOTAL SHEETS
9	COLO.	C C10-0075-05	20	240

FINAL CONSTRUCTION

AS CONSTRUCTED
REVISED DATE 11-16-68

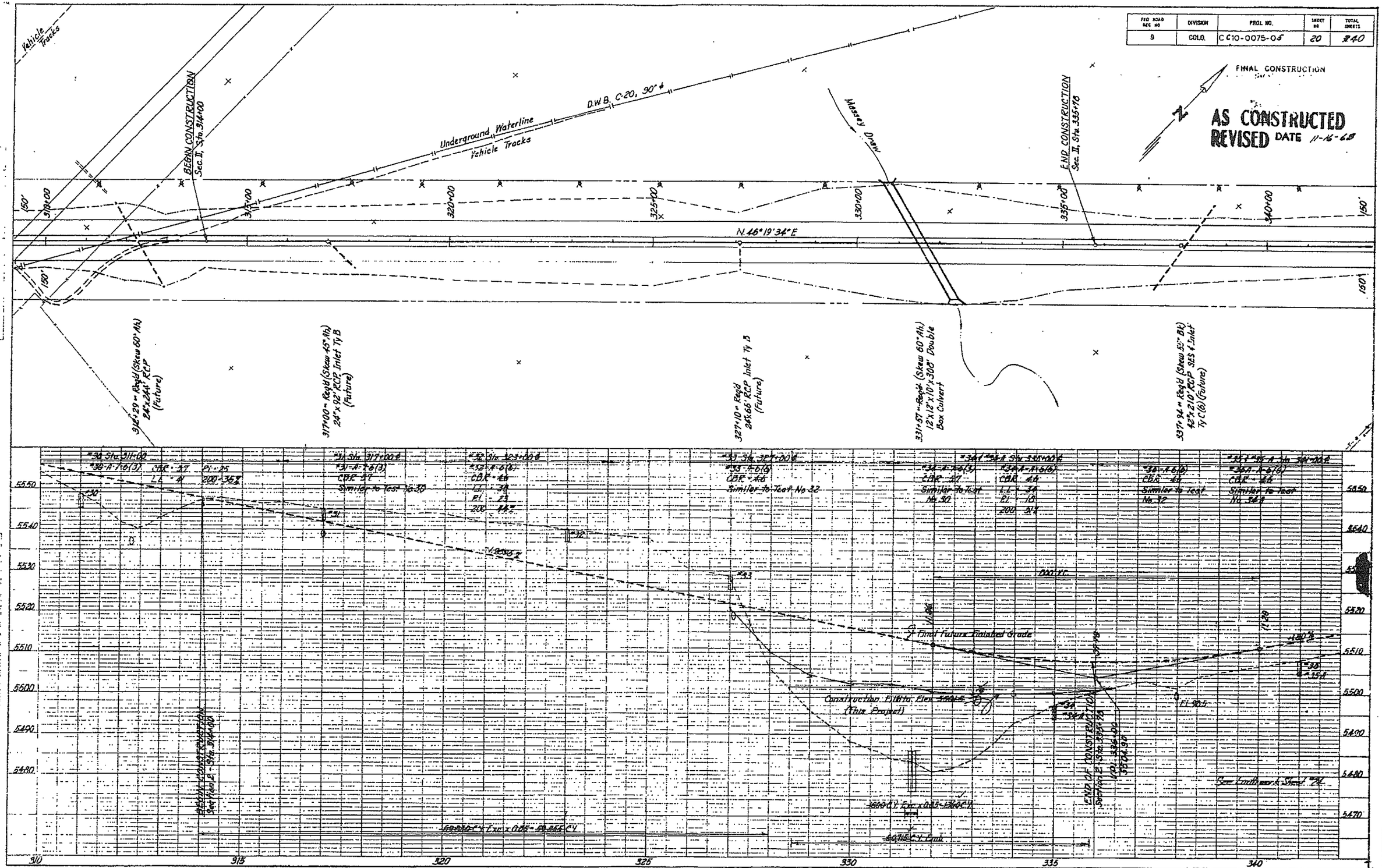

K+E PLATE 1, PLAN-PROFILE
KEUFFEL & ESSER CO.

DEPARTMENT OF HIGHWAYS, STATE OF COLORADO

FED. ROAD REG. NO.	DIVISION	PROJ. NO.	SHEET NO.	TOTAL SHEETS
9	COLO.	CC10-0075-05	21	240

FINAL CONSTRUCTION

AS CONSTRUCTED
REVISED DATE 11-14-65

BAR LIST				
Mark	Size	No. Req'd	Type	Length
401	#4	10	Str.	8'-8"
402		8	"	6'-6"
403		8	"	3'-8"
404		8	"	3'-11"
405	#4	4	Str.	2'-8"
BAR SUMMARY				
224.66 L.Ft. #4 = 0.668#/L.Ft. = 150 Lbs.				

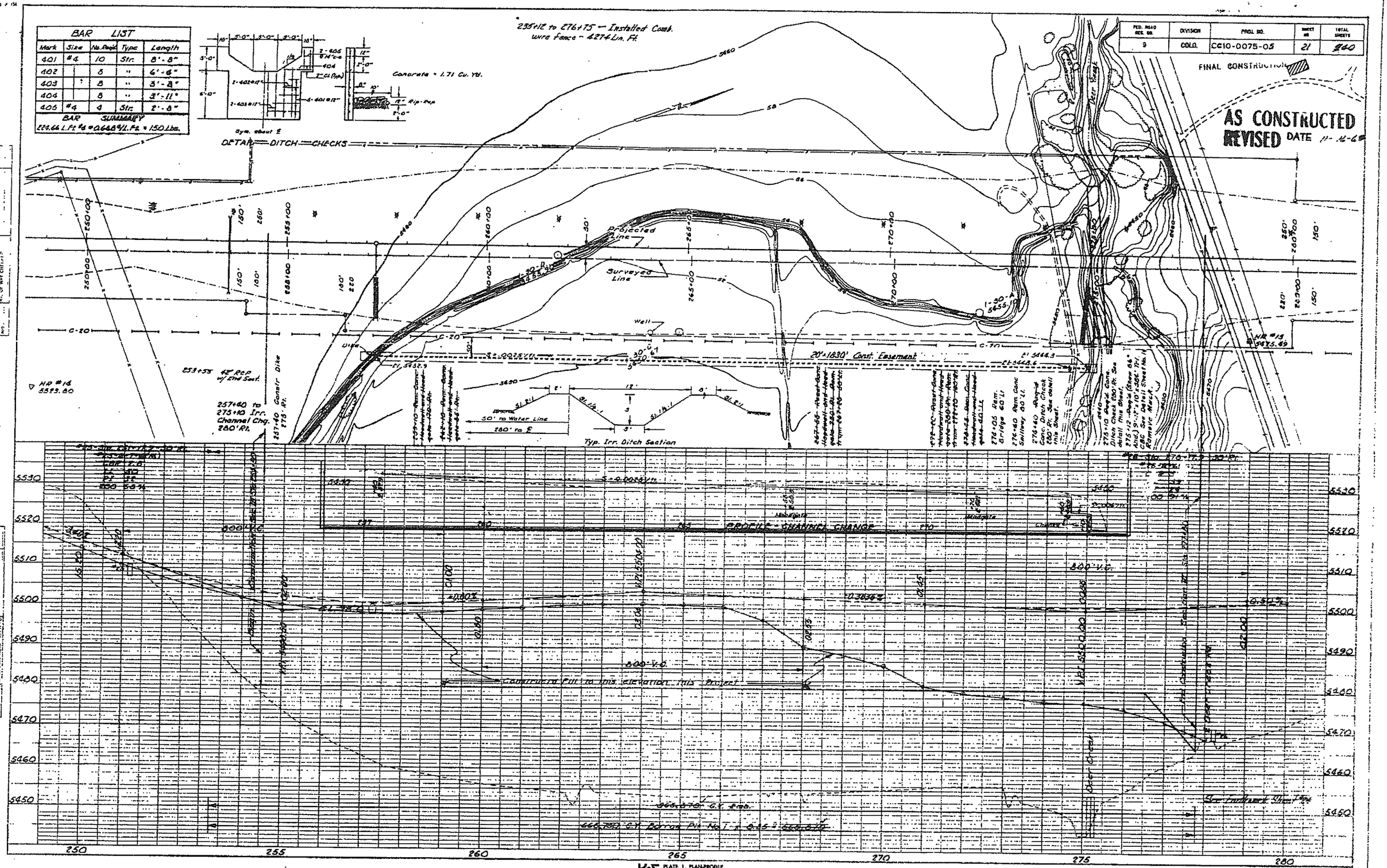

K+E PLATE 1, PLAN-PROFILE
KEUFFEL & ESSER CO.

FED. ROAD REG. NO.	DIVISION	PROJ. NO.	SHEET NO.	TOTAL SHEETS
9	COLO.	CC10-0075-05	22	240

AS CONSTRUCTED
REVISED DATE 11-16-68

FINAL CONSTRUCTION

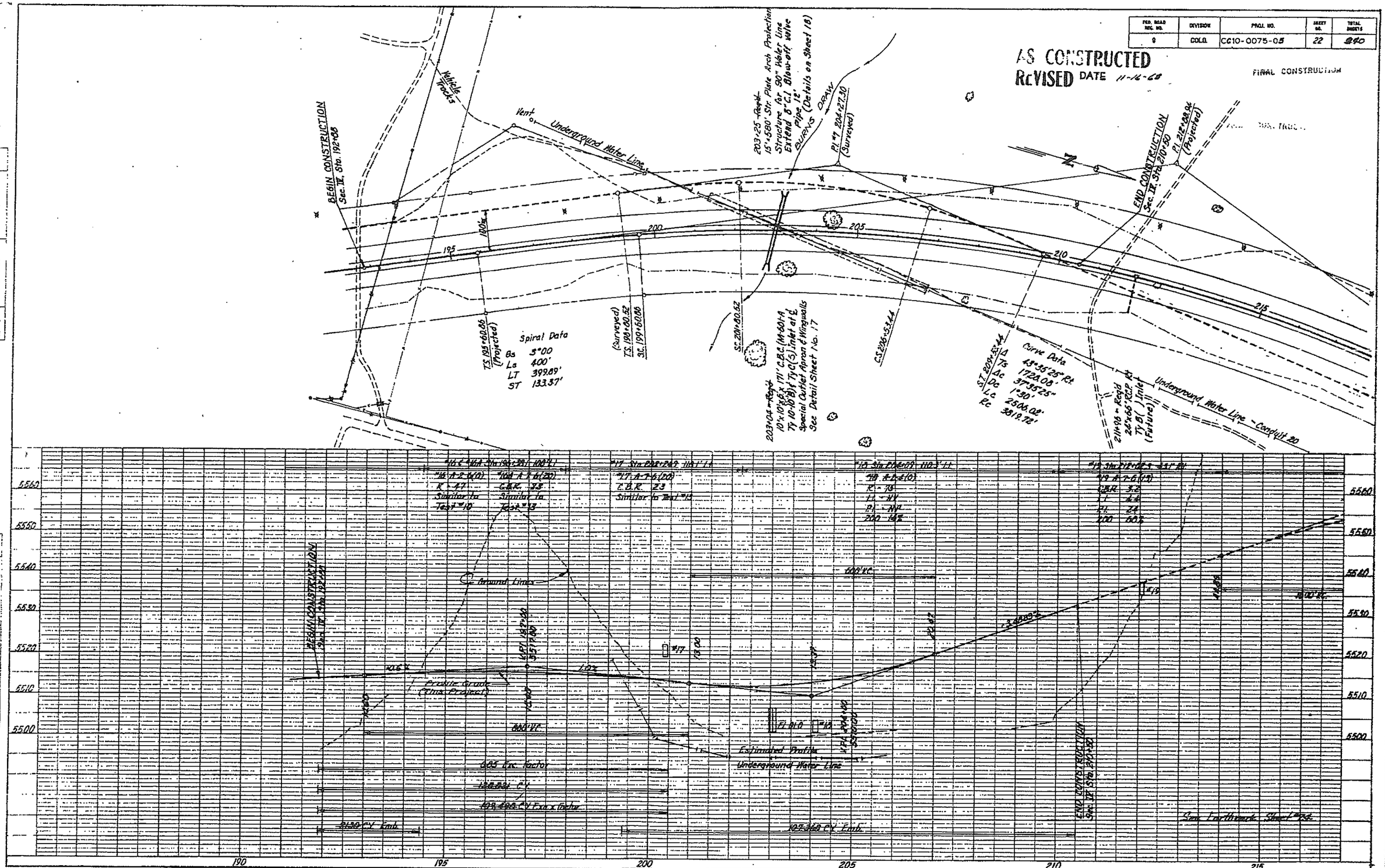

K+E PLATE 1, PLAN-PROFILE KEUFFEL & ESSER CO.