N

F-17-HM

F-17-IE

F-17-ID

F-17-HL

F-17-IT

F-17-JW

F-17-IQ

F-17-JX

F-17-JU

OV

I-25/E/C 470 RAMP B (WB I-25) + RAMP C (WB C-470)

AS CONSTRUCTED			
NO REVISIONS		REVISED 11-6-84	VOID

FEDERAL ROAD REGION NO.	DIVISION	PROJ. NO.	SHEET NO.	TOTAL SHEETS
VIII	COLORADO	I 25-2(154)	8	79

REVISIONS			
R-1	10-17-84	Added Notes	L.E.G.

GENERAL NOTES

ALL WORK ~~SHALL BE~~ DONE ACCORDING TO THE STANDARD SPECIFICATIONS OF THE DIVISION OF HIGHWAYS, STATE OF COLORADO, APPLICABLE TO THE PROJECT.

STRUCTURE EXCAVATION AND BACKFILL ~~SHALL BE~~ IN ACCORDANCE WITH STANDARD M-206-2.

EXPANSION JOINT MATERIAL ~~SHALL MEET~~ AASHTO SPECIFICATION M-213.

ALL STRUCTURAL STEEL EXCEPT PILING ~~SHALL BE~~ ASTM-572 UNLESS OTHERWISE NOTED.

STEEL PILING ~~SHALL BE~~ AASHTO M-183 (ASTM A-36).

STRUCTURAL STEEL FOR INTERMEDIATE DIAPHRAGMS, TRANSVERSE STIFFENERS, LATERAL BRACING AND EXPANSION JOINT DEVICE METAL SHALL BE A-36.

R-1 ALL STEEL SHALL BE PAINTED IN ACCORDANCE WITH SECTION 509 OF THE STANDARD SPECIFICATIONS. THE COLOR (DARK TAN) SHALL MATCH THE DARK TAN FOUND ON THE BOWEN FARM ROAD STRUCTURE AT STA. 940+ AND IS TO BE SELECTED FROM TEST PANELS PROVIDED BY THE CONTRACTOR AS DIRECTED BY THE ENGINEER.

THE GIRDER TENSION FLANGES SHALL BE DEFINED AS FRACTURE CRITICAL.

ALL BOLTS ~~SHALL BE~~ 7/8 INCH DIAMETER, HIGH STRENGTH ASTM A-325, UNLESS OTHERWISE NOTED.

NO WELDING OF ANY KIND ~~SHALL BE~~ PERMITTED ON THE STEEL GIRDERS UNLESS SPECIFICALLY CALLED FOR ON THE PLANS.

GRADE 60 REINFORCING STEEL ~~IS~~ REQUIRED FOR #4 BARS AND LARGER.

THE FOLLOWING TABLE GIVES THE MINIMUM LAP SPLICE LENGTH FOR REINFORCING BARS:

BAR SIZE	#4	#5	#6	#7	#8	#9	#10	#11
SPLICE LENGTH FOR CLASS A CONCRETE	1'-0"	1'-3"	1'-8"	2'-3"	3'-0"	3'-10"	4'-10"	5'-11"
SPLICE LENGTH FOR CLASS D CONCRETE	1'-0"	1'-3"	1'-6"	2'-0"	2'-7"	3'-4"	4'-2"	5'-1"

R-1 ~~THE~~ ABOVE SPLICE LENGTHS ~~SHALL BE~~ INCREASED BY 20 PERCENT FOR 3 BAR BUNDLES. CLASS 5 COLORED COATING FINISH ~~WILL BE~~ REQUIRED ON ALL EXPOSED CONCRETE SURFACES. THE COLOR SHALL BE LIGHT BUFF AND IS TO BE SELECTED FROM TEST PANELS PROVIDED BY THE CONTRACTOR AS DIRECTED BY THE ENGINEER.

APPLIED WIND LOADS AND EARTHQUAKE LOADS WERE NOT CONSIDERED IN ANALYZING THE STRUCTURE FOR STABILITY DURING THE CONSTRUCTION STAGES.

E.F. = EACH FACE
F.F. = FAR FACE
N.F. = NEAR FACE

FOR STRUCTURE NUMBER INSTALLATION, SEE B-27.

ALL CHAMFERS 3/4" UNLESS OTHERWISE NOTED.

QUANTITIES BY T.M.S. 3-84
CHECKED BY S.W.W. 3-84

DESIGN DATA

CURRENT AASHTO SPECIFICATIONS:

LIVE LOAD: AASHTO HS-20-44 AND INTERSTATE ALTERNATE
DEAD LOAD: ASSUMES 48 LBS PER SQ. FT. FOR BITUMINOUS PAVEMENT
DESIGN METHOD: LOAD FACTOR DESIGN
REINFORCED CONCRETE:

CLASS A CONCRETE: f'_c = 3,000 psi, n = 9
CLASS D CONCRETE: f'_c = 4,500 psi, n = 8
REINFORCING STEEL: #4 BARS AND LARGER: f_y = 60,000 psi
STRUCTURAL STEEL: AASHTO M-223 (ASTM A-572) f_y = 50,000 psi
AASHTO M-222 (ASTM A-588) f_y = 50,000 psi
AASHTO M-183 (ASTM A-36) f_y = 36,000 psi

CHECKED BY R.D.G.
DETAILED BY L.M.J.

SUMMARY OF QUANTITIES

ITEM	DESCRIPTION	UNIT	SUPER-STRUCTURE	ABUT. 1	PIER 2	PIER 3	PIER 4	ABUT. 5	APPROACH SLAB	TOTALS
(1) 206	STRUCTURE EXCAVATION	Cu.Yd.		894	612		326	651		2483
206	STRUCTURE BACKFILL (CLASS 2)	Cu.Yd.		588	506		242	573		1909
206	FILTER MATERIAL (CLASS B)	Cu.Yd.		7				7		14
(3) 403	~~HOT BITUMINOUS PAVEMENT (GRADING EX)~~	Ton	295						16	311
502	STEEL PILING (HP 12 x 74)	Lin. Ft.		170				260		430
507	CONCRETE SLOPE AND DITCH PAVING (REINFORCED)	Cu.Yd.		108				253		361
								44		44
(2) 509	STRUCTURAL STEEL	Lb.	1,098,315					42.95		42.95 / 1,098,315
512	BEARING DEVICE (TYPE III)	Each		2	2	2	2	2		10
513	BRIDGE DRAIN (8 INCH)	Each	2							2
(3) 515	WATERPROOFING (MEMBRANE)	Sq.Yd.	2710						150	2860
518	BRIDGE COMPRESSION JOINT SEALER	Lin. Ft.							48	48
518	BRIDGE EXPANSION DEVICE (0-6 INCH)	Lin. Ft.		38				38		76
601	CONCRETE CLASS A (BRIDGE)	Cu.Yd.		79	146	55	137	79		496
601	CONCRETE CLASS A (WALL)	Cu.Yd.		14	161.78		152.76	14		527.54
601	CONCRETE CLASS D (BRIDGE)	Cu.Yd.	866	13.73 42				13.73 42	56	28 27.46 1006
602	REINFORCING STEEL	Lb.	106,590 97,845	9895	40,245	16,120	33,300	9905	6,180	222,235
602	REINFORCING STEEL (EPOXY COATED)	Lb.	149,775 148,475	2250				2250	660	213,490 154,935
~~605~~	~~6 INCH PERFORATED PLASTIC PIPE (P.V.C.)~~	Lin. Ft.		~~55~~				~~55~~		153,635 ~~110~~
605	6 INCH PERFORATED CORRUGATED PLASTIC PIPE UN. FT			104				66		170
613	1 1/2 INCH ELECTRICAL CONDUIT	Lin. Ft.	1442							1442
	FURN. Deck Sensor Equip CMD*C	EA.								1

(1) ~~Includes~~ Did not include 44 Cu. Yd. structure excavation for concrete slope and ditch paving and 278 Cu. Yd. rock excavation.
(2) ~~Does~~ not include 76,930 lbs. structural steel for temporary erection diaphragms.
(3) Future Construction

INDEX OF DRAWINGS

DWG. NO. B-1 GENERAL INFORMATION - SUMMARY OF QUANTITIES
DWG. NO. B-2 GENERAL LAYOUT
DWG. NO. B-3 GENERAL LAYOUT
DWG. NO. B-4 ENGINEERING GEOLOGY
DWG. NO. B-5 CONSTRUCTION LAYOUT AND FOOTING AND PILING LAYOUT
DWG. NO. B-6 CONSTRUCTION LAYOUT AND FOOTING AND PILING LAYOUT
DWG. NO. B-7 CONSTRUCTION LAYOUT AND FOOTING AND PILING LAYOUT
DWG. NO. B-8 ABUTMENT DETAILS
DWG. NO. B-9 WINGWALL DETAILS
DWG. NO. B-10 PIERS 2 AND 4 DETAILS
DWG. NO. B-11 PIER 3 DETAILS
DWG. NO. B-12 FRAMING PLAN AND GIRDER ELEVATION
DWG. NO. B-13 FRAMING PLAN AND GIRDER ELEVATION
DWG. NO. B-14 FRAMING PLAN AND GIRDER ELEVATION
DWG. NO. B-15 CAMBER DIAGRAM
DWG. NO. B-16 END DIAPHRAGM AND PIER DIAPHRAGMS
DWG. NO. B-17 FIELD SPLICE AND LONGITUDINAL STIFFENERS
DWG. NO. B-18 INTERMEDIATE DIAPHRAGMS, TRANSVERSE STIFFENERS AND LATERAL BRACING DETAILS
DWG. NO. B-19 ACCESS MANHOLE, GIRDER DRAIN, AND DECK DRAIN DETAILS
DWG. NO. B-20 SUPERSTRUCTURE DETAILS
DWG. NO. B-21 APPROACH SLAB DETAILS
DWG. NO. B-22 BRIDGE EXPANSION DEVICE (0-6 INCH)
DWG. NO. B-23 ABUTMENT COVER PLATE DETAILS
DWG. NO. B-24 BEARING DETAIL
DWG. NO. B-25 SLOPE PAVING DETAILS
DWG. NO. B-26 BENCH MARK
DWG. NO. B-27 STRUCTURE NUMBER STANDARD
DWG. NO. B-28 ROADWAY APPROACHES
DWG. NO. B-29 BRIDGE DECK ELEVATIONS
DWG. NO. B-30 BRIDGE DECK ELEVATIONS
DWG. NO. B-31 BRIDGE DECK ELEVATIONS
DWG. NO. B-32 BRIDGE DECK ELEVATIONS

BRIDGE DESCRIPTION

4-SPAN (130'-0", 169'-10 1/2", 185'-1 1/2", 145'-0") BRIDGE, WELDED STEEL BOX GIRDER, COMPOSITE, AND CONTINUOUS

OVER I-25

38'-0" ROADWAY CURB TO CURB. 90° 00'00" SKEW

1'-9" CONCRETE BRIDGE BARRIER

HNTB

CROSS REFERENCE DRAWING NUMBER
B
SECTION OR DETAIL IDENTIFICATION

R-1 The galvanized forms on the underside of bridge deck ~~to be~~ was painted light buff to match class 5 surface finish.

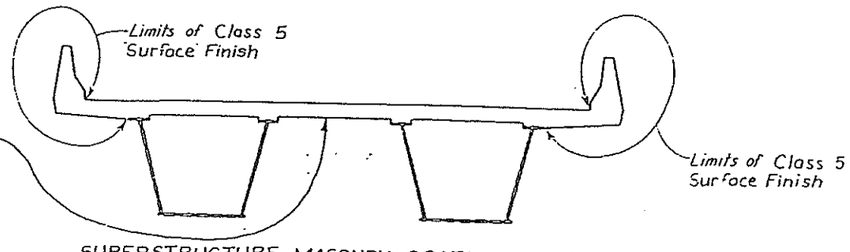

SUPERSTRUCTURE MASONRY COATING FINISH DIAGRAM

RICHARD A. HEDRICK 18018 REGISTERED PROFESSIONAL ENGINEER STATE OF COLORADO

Reviewed 7-24-84
BRIDGE ENGINEER DATE

DIVISION OF HIGHWAYS

GENERAL INFORMATION
SUMMARY OF QUANTITIES
(RAMP B)

Station 7411+68.75 to
Station 7418+05.25

Near: Denver Sec. 3 T. 6 S. R. 67 W.

Designer R. Hedrick | Structure Numbers F-17-IT
Detailer R. Gordon
Drawing Number B-1 of 32 Drawings

AS CONSTRUCTED				
NO REVISIONS		REVISED 11-6-86	VOID	

FEDERAL ROAD REGION NO.	DIVISION	PROJ. NO.	SHEET NO.	TOTAL SHEETS
VIII	COLORADO	I25-2(154)	9	79

REVISIONS

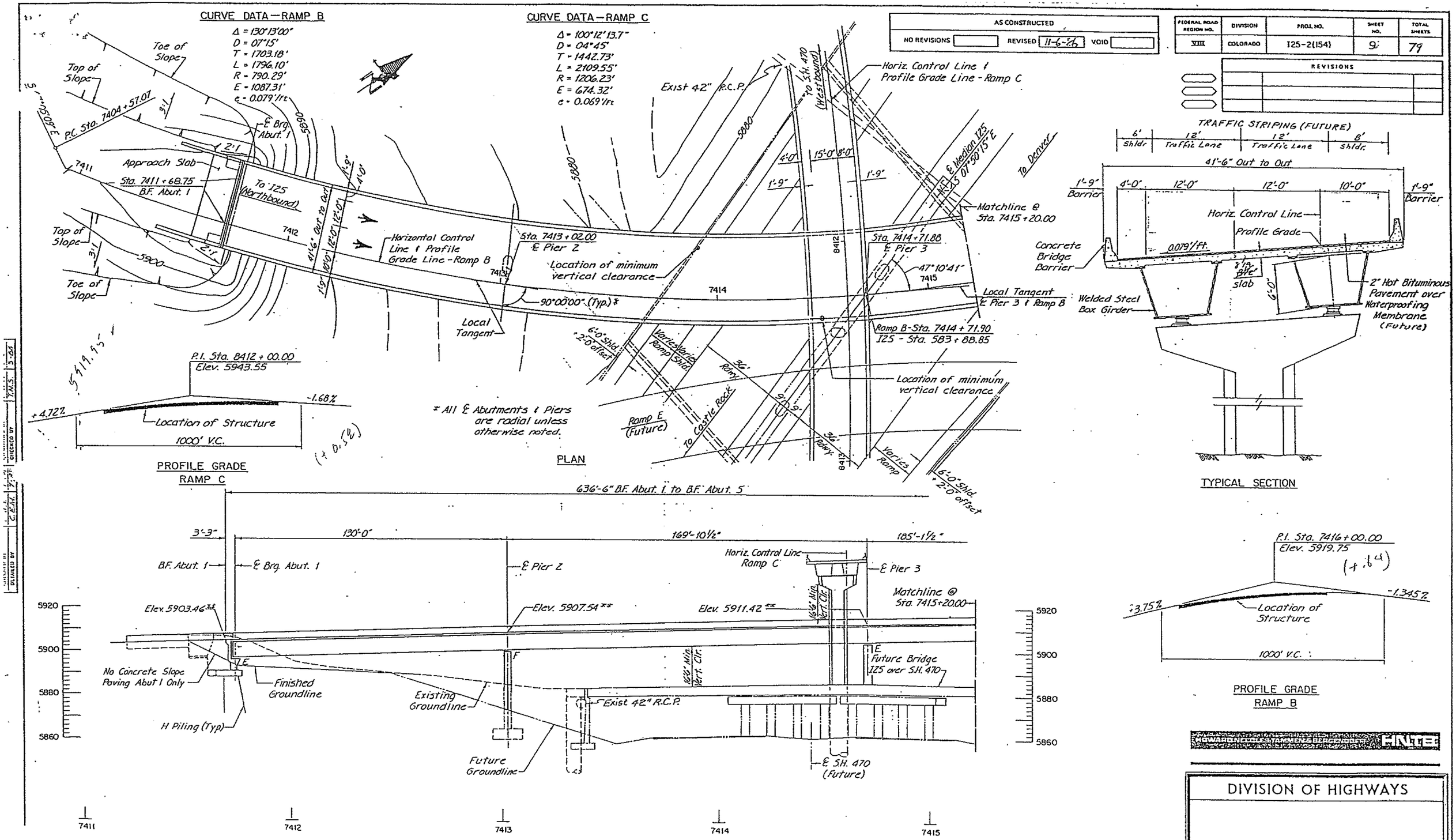

Notes:
Live Loading: HS-20-44 and Interstate Alternate.

Profile Grade for I25 is not shown.

HOWARD NEEDLES TAMMEN & BERGENDOFF FINTEC

DIVISION OF HIGHWAYS

GENERAL LAYOUT

(RAMP B)

Designer R Hedrick	Structure Numbers	F-17-IT	
Detailer C. Meyers			
Drawing Number B-2	of	32	Drawings

AS CONSTRUCTED			
NO REVISIONS	11-3-86	REVISED	VOID

FEDERAL ROAD REGION NO.	DIVISION	PROJ. NO.	SHEET NO.	TOTAL SHEETS
VIII	COLORADO	I25-2(154)	10	79

REVISIONS			
R-1	10-17-84	Added Pipe Around Pier	L.E.G.

DETAILED BY C.E.M. 7-12 | CHECKED BY T.N.S. 3-84

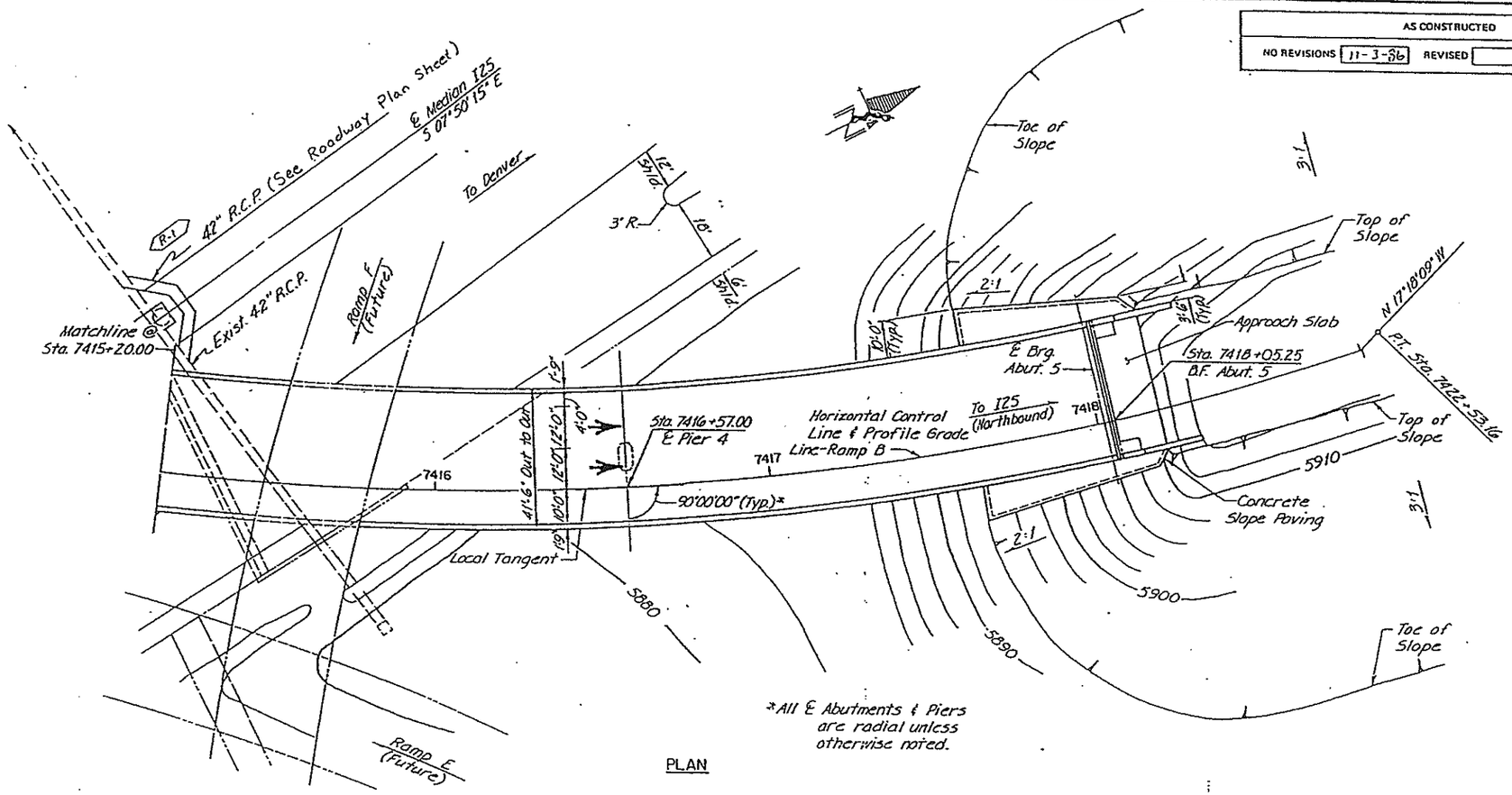

PLAN

*All ℄ Abutments & Piers are radial unless otherwise noted.

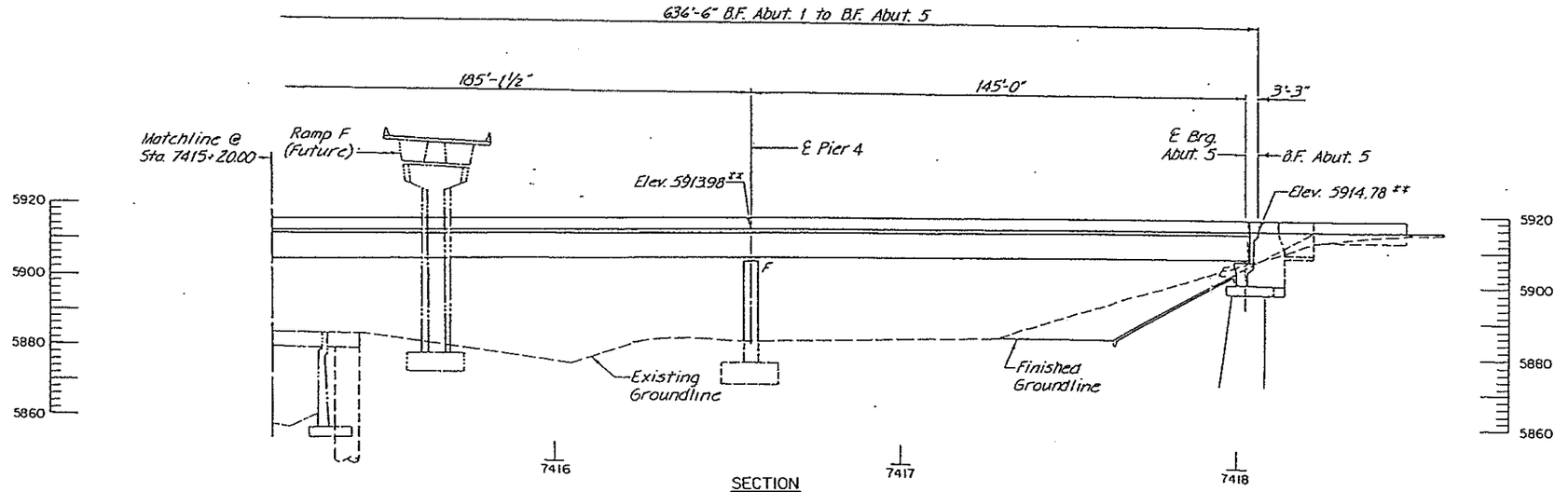

SECTION

Taken @ Horiz. Control Line
**Finished Grade Elevations

HNTB

DIVISION OF HIGHWAYS

GENERAL LAYOUT

(RAMP B)

Designer	R Hedrick	Structure Numbers	F-17-IT
Detailer	C. Meyers		
Drawing Number	B-3	of 32	Drawings

AS CONSTRUCTED			
NO REVISIONS 11-3-86	REVISED	VOID	

FED. ROAD REG. NO.	DIVISION	PROJECT NO.	SHEET NO.	TOTAL SHEETS
VIII	COLORADO	I 25-2(154)	1L	79

REVISIONS		

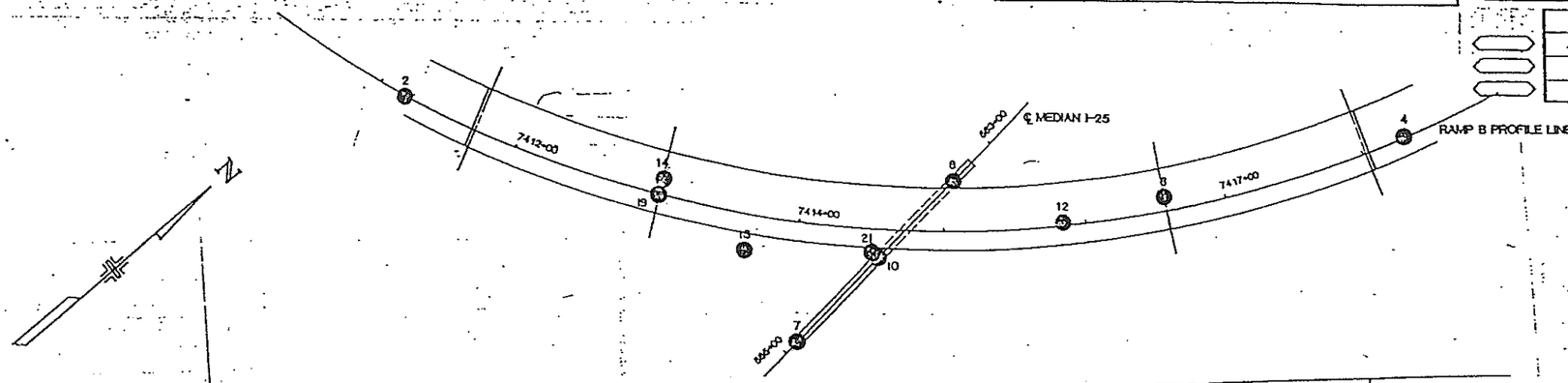

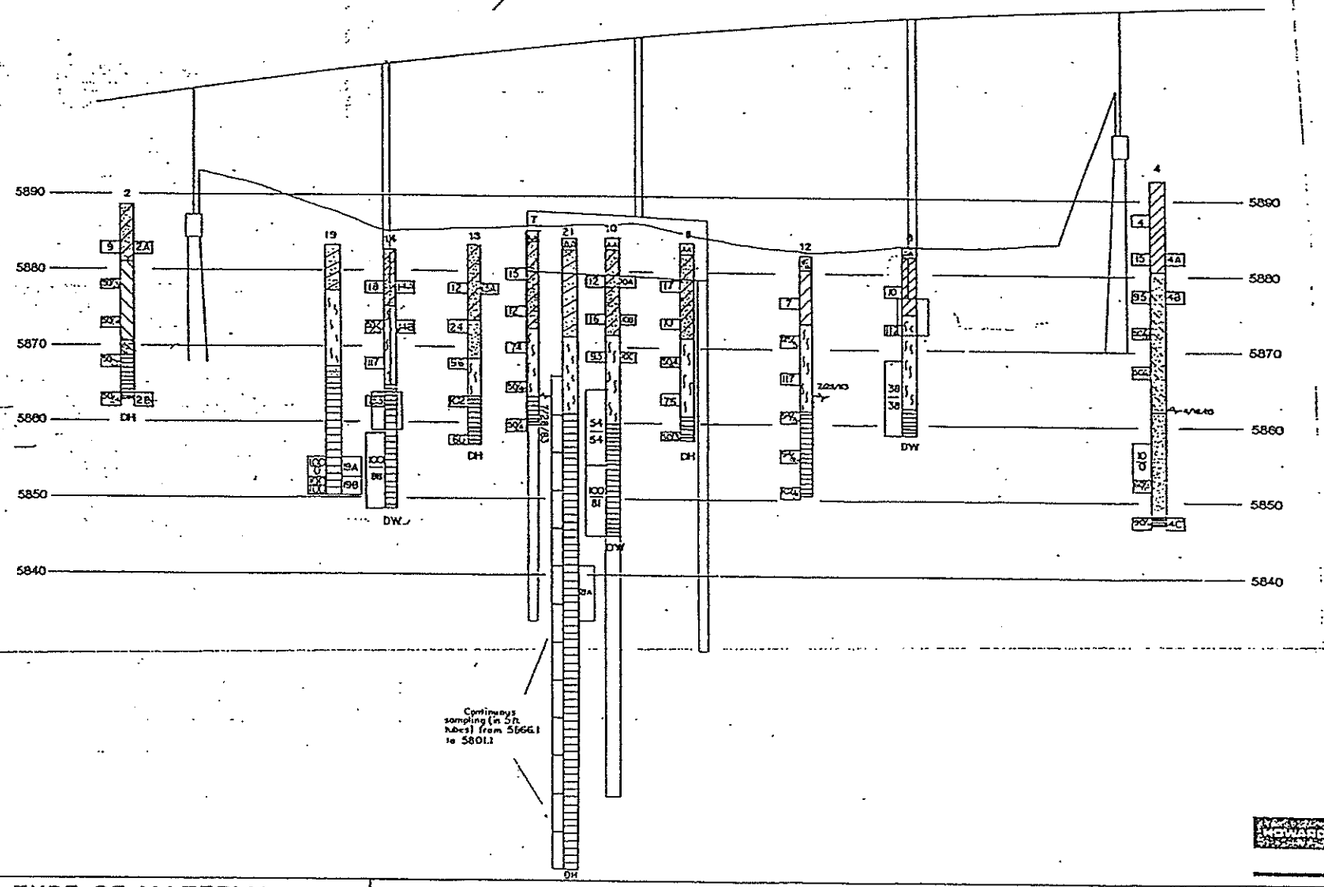

SUMMARY OF TEST RESULTS

Boring No.	Depth	Classification: Comm. of Soils or Wood	Classification: AASHTO	Grading Analysis: Percent Gravel	Coarse Sand	Fine Sand	Silt & Clay	Atterberg Limits: Liquid Limit	Plastic Limit	Plasticity Index	Moisture Content %	Dry Density lbs/cu.ft.	Unconfined Strength Q_u T.S.F.	Triaxial Shear Strength (1000 psf): ϕ	C P.S.F.	Swell Pressure lbs/sq.ft.
2A	5.0-6.5	SILTY CLAY	A-6(9)	6	17	15	62	39	20	19	10.9					
2B	25.0-25.8	SHALE										131.6	12.2			1,383
4A	9.5-11.0	CLAY	A-7-6(20)	1	7	16	76	45	18	27	17.1					
4B	14.5-16.0	SAND	A-2-4(0)	10	38	36	16	NV	NP	NP	3.8					
4C	44.5-45.5	SHALE										132.9	28.1			1,378
6A	22.0-22.8	SHALE										131.57	4.81			2,070
6B	22.8-23.0	SHALE										138.34	4.47			2,079
10A	5.0-6.5	SANDY CLAY	A-7-6(15)	9	21	13	57	52	21	31	21.4					
10B	10.0-11.5	SANDY CLAY	A-7-6(16)	4	12	12	72	41	17	24	21.1					
10C	15.0-16.3	SANDSTONE	A-2-4(0)	1	17	53	29	31	23	8	11.3					
10D	27.1-27.8	SHALE										118.91	0.70			2,040
10E	28.2-28.9	SHALE									21.3	126.8		33.3	12.0	
8-10	29.0-35.5	SHALE									21.8	127.4		27	10	
10F	32.7-33.3	SHALE										120.16	2.28			2,059
13A	5.0-6.5	SANDY CLAY	A-7-6(12)	14	24	13	49	53	18	35	20.0					
14A	4.9-6.0	SANDY CLAY	A-7-6(14)	4	16	25	55	49	16	33	17.0					
14B	9.5-10.8	SANDSTONE	A-2-4(0)	12	37	36	15	23	21	4	6.5					
14C	28.0-28.5	SHALE										124.1	4.6			2,00
19A	28.0-30.5	SHALE	A-7-6(38)	0	0	7	93	63	28	35	22.3	128.0				
19B	30.5-33.0	SHALE	A-7-6(12)	0	2	46	52	57	27	30	23.2	127.7				
21A	43.3-50.8	SHALE									18.5	135.17		35	70.0	

Continuous sampling (4 in. tubes) from 5866.1 to 5801.1

TYPE OF MATERIAL

- ASPHALT CONCRETE & SAND
- CLAY
- SANDY CLAY
- GRAVELLY CLAY
- SHALE
- SANDSTONE
- GRAVELLY SAND
- SAND
- CLAYEY SAND
- SILTY SAND
- CLAYEY GRAVEL
- SILTSTONE

LEGEND

TEST BORING

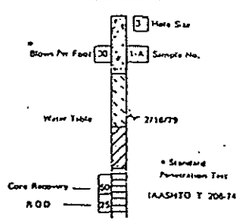

CONTINUOUS PENETRATION TEST

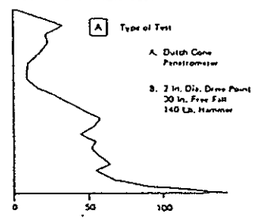

- Location of Test Boring
- Location of Continuous Penetration Test
- Rotary Boring
- Auger Boring
- DH DRY HOLE
- DW DRILLED WITH WATER

STRUCTURE NO. F-17-IT

DIVISION OF HIGHWAYS

(RAMP B)

ENGINEERING GEOLOGY

I-25 AND S.H. 470 INTERCHANGE

Geologist EH, LB
Drawn by PM
Checked by LB JG

Date NOV. 14, 1983

NO REVISIONS | REVISED 11-6-86 | VOID

VIII	COLORADO	I25-2(154)	NO. 12	SHEET 79

REVISIONS

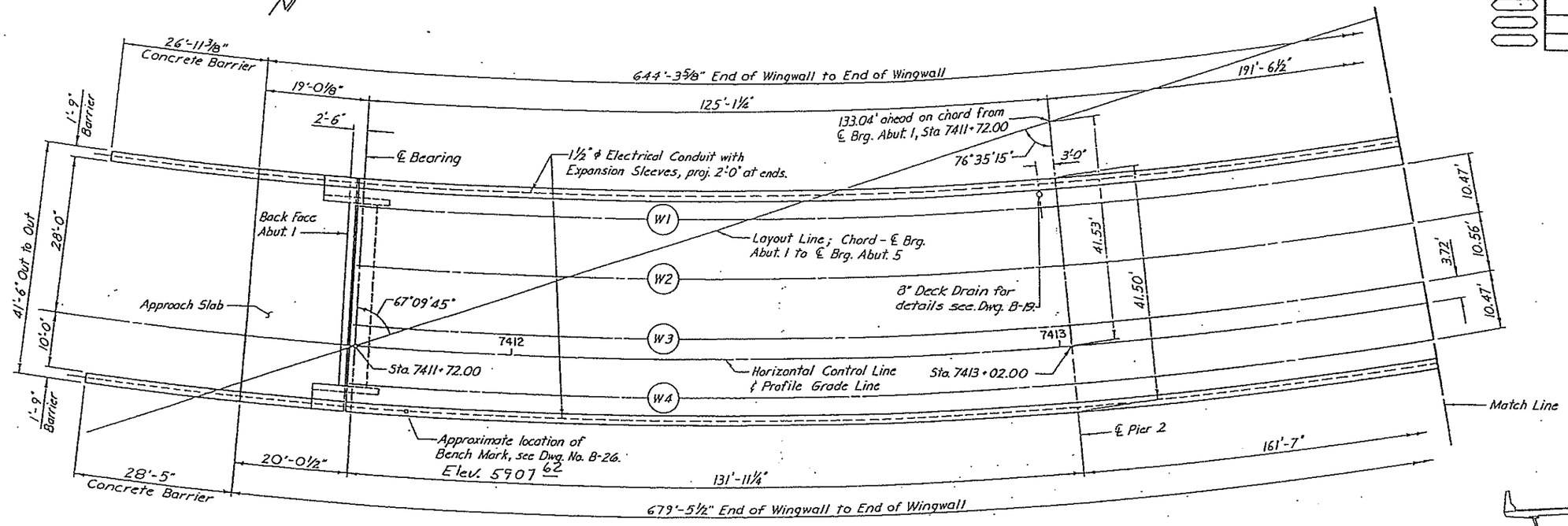

CONSTRUCTION LAYOUT

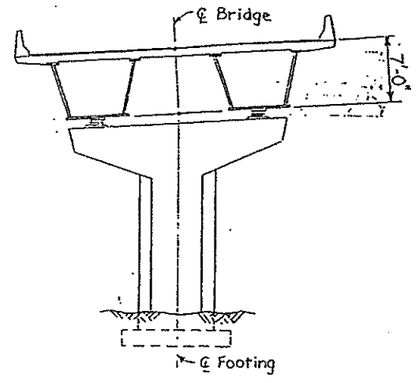

NOTE: PILING CUT-OFF ELEV. = 5885.00 (TYP.)

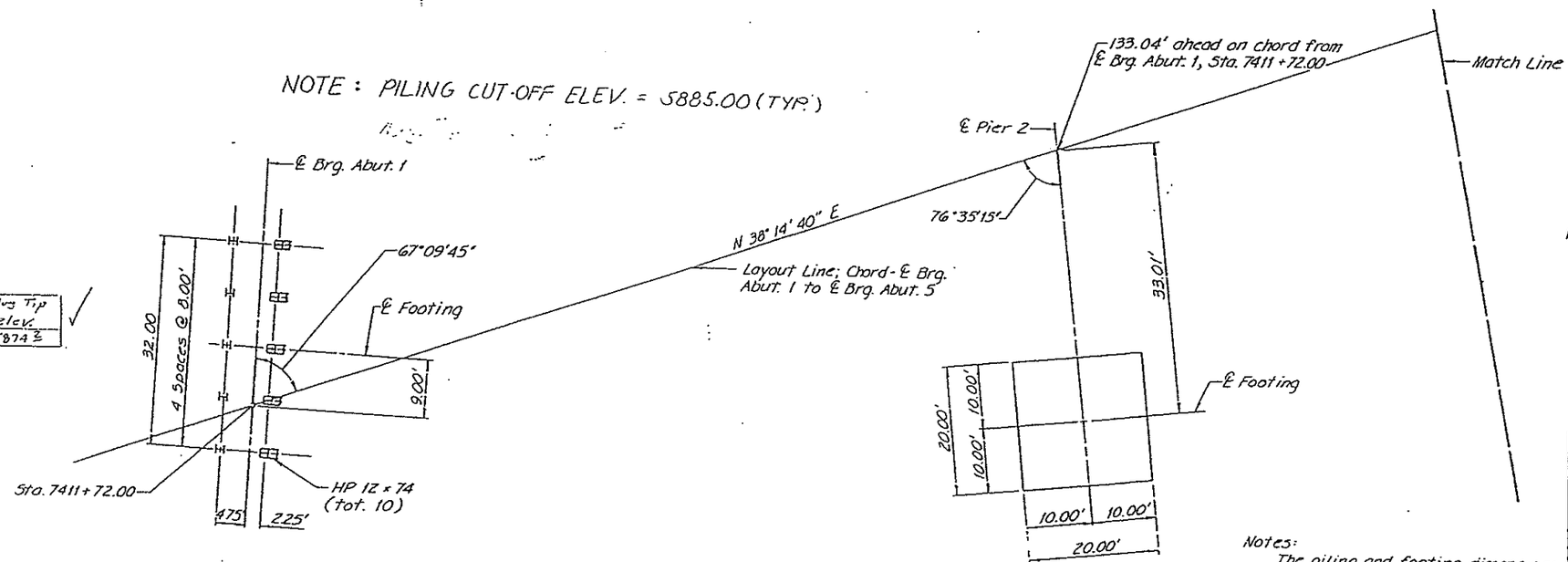

Location	Maximum Pile Load	Est. Tip Elevation	Avg Tip elev.
Abut. 1	85 Tons	5868	5874 ±

FOOTING AND PILING LAYOUT

Note:
All footings are offset from the ℄ of bridge by an amount equal to the rate of superelevation times the superstructure depth of 7'-0".

Notes:
The piling and footing dimensions shown are at the bottom of concrete.
⊞ Indicates piling to be battered in the direction shown. Batter shall be 3:12.
Maximum Pier 2 Footing Pressure is 7.5 Tons/Sq. Ft.

HOWARD NEEDLES TAMMEN & BERGENDOFF HNTB

DIVISION OF HIGHWAYS

CONSTRUCTION LAYOUT
AND
FOOTING AND PILING LAYOUT
(RAMP B)

Designer	T. Stouffer	Structure Numbers	F-17-IT
Detailer	R. Gordon		
Drawing Number B-5		of 32	Drawings

Revision Dates (Preliminary Stage Only)

CHECKED BY	B.W.H.	3-84	QUANTITIES BY	B.W.H.	3-84
DETAILED BY	R.D.G.	3-84	CHECKED BY	T.N.S.	3-84

NO REVISIONS 11-6-76 REVISED VOID

REGION NO.			NO.	SHEET
VIII	COLORADO	I25-2(154)	13	79

REVISIONS

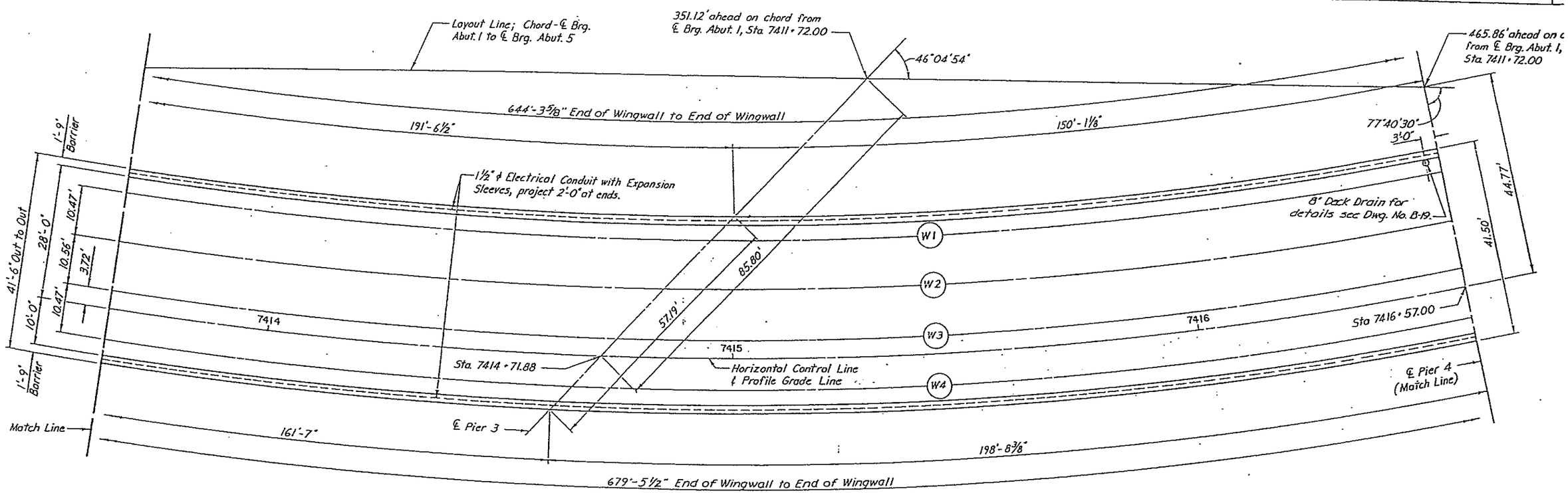

CONSTRUCTION LAYOUT

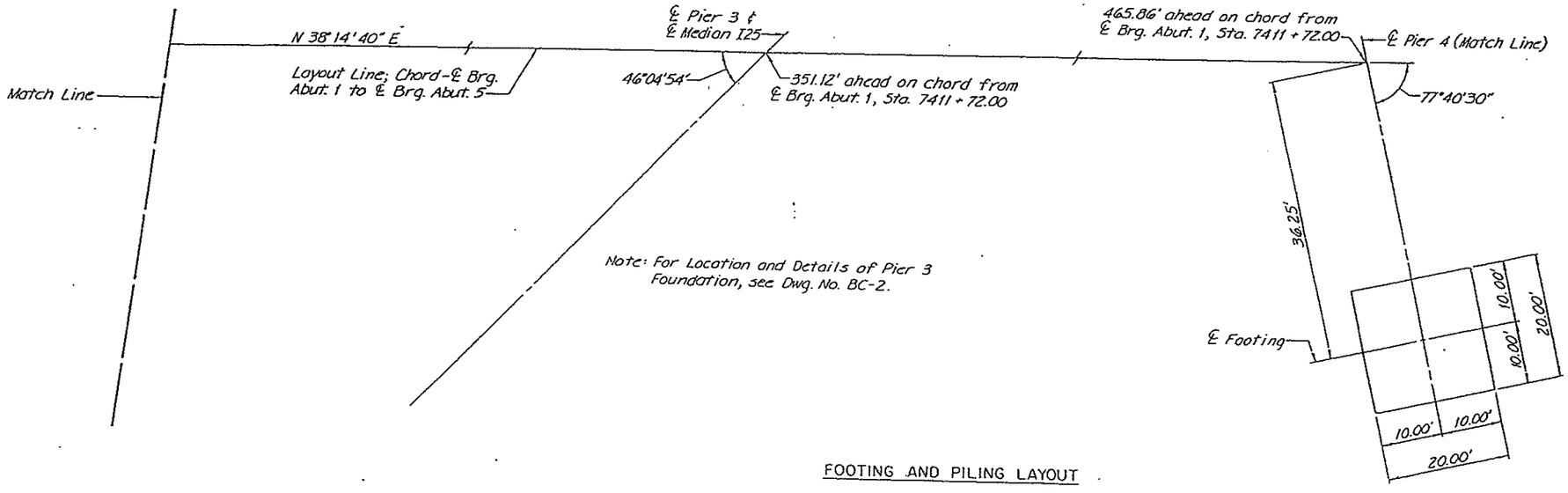

FOOTING AND PILING LAYOUT

Note:
The footing dimensions shown are at the bottom of the concrete.
Maximum Pier 4 Footing Pressure is 8 Tons/Sq. Ft.

HOWARD NEEDLES TAMMEN & BERGENDOFF HNTB

DIVISION OF HIGHWAYS

CONSTRUCTION LAYOUT
AND
FOOTING AND PILING LAYOUT
(RAMP B)

Designer	T. Stauffer	Structure Numbers	F-17-IT
Detailer	R. Gordon		
Drawing Number B-6		of 32	Drawings

Revision Dates (Preliminary Stage Only)

CHECKED BY	B.W.H.	2-84	QUANTITIES BY	B.W.H.	3-84
DETAILED BY	R.D.G.		CHECKED BY	T.N.S.	3-84

AS CONSTRUCTED				
NO REVISIONS		REVISED 11-6-86	VOID	

FEDERAL ROAD REGION NO.	DIVISION	PROJ. NO.	SHEET NO.	TOTAL SHEETS
VIII	COLORADO	I 25-2(154)	14	79

REVISIONS

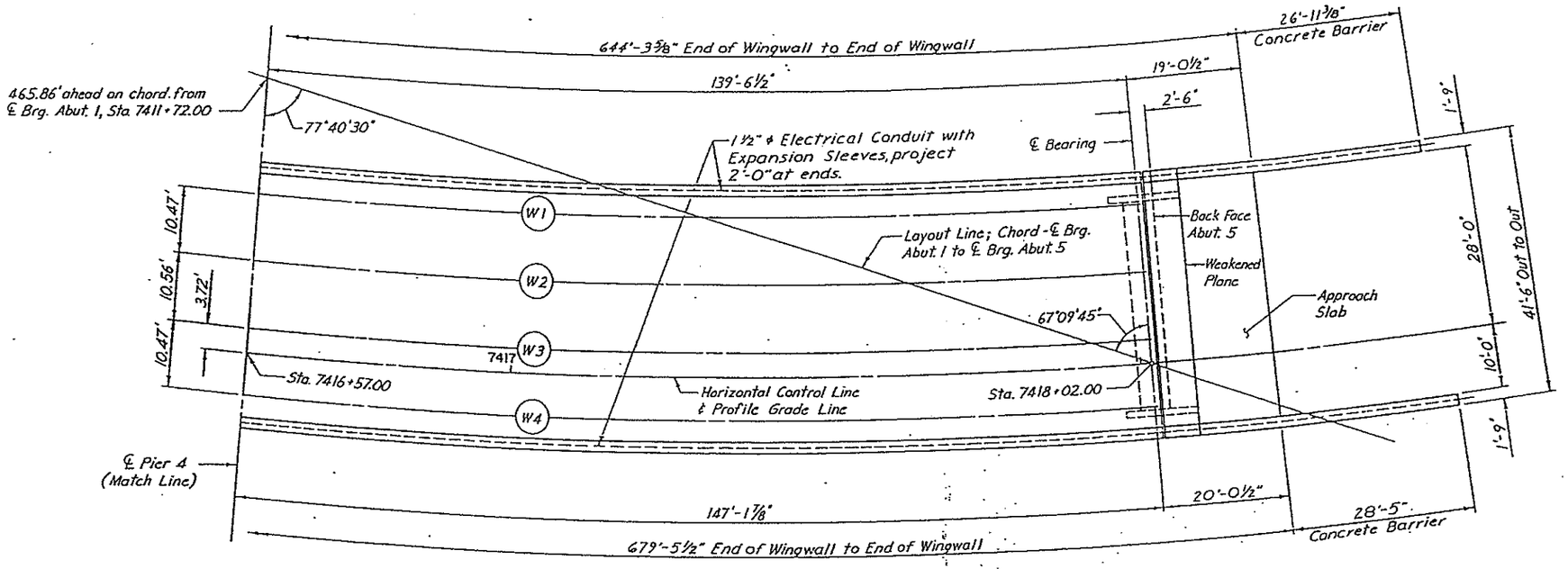

CONSTRUCTION LAYOUT

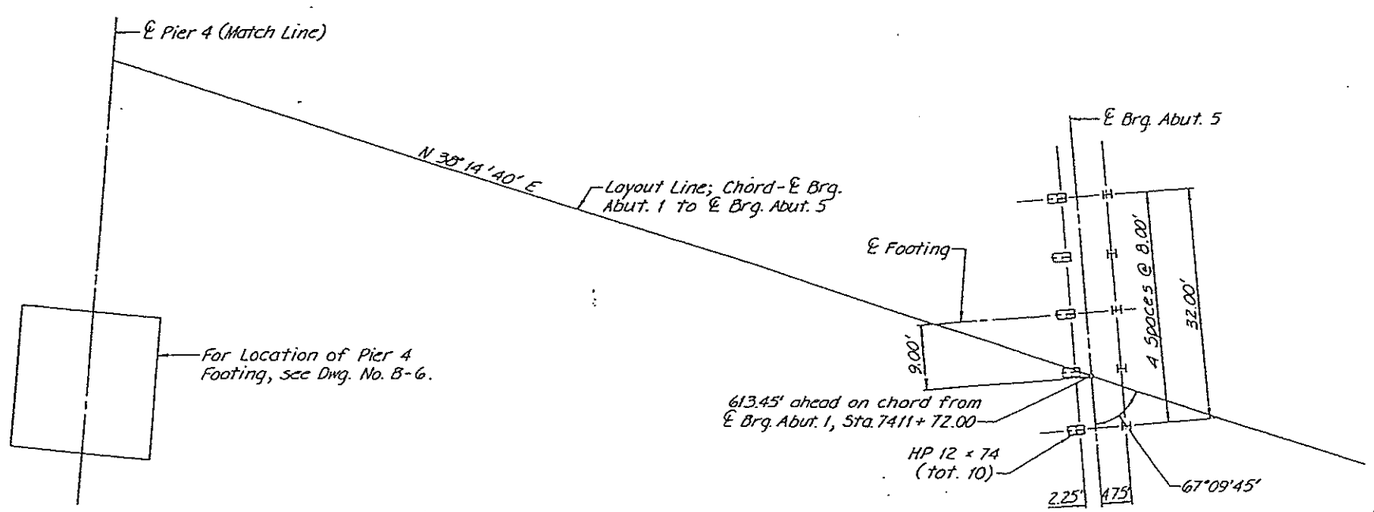

Location	Maximum Pile Load	Est. Tip Elevation	Avg Tip elev
Abut. 5	85 Tons	5870	5871.2

Note:
The piling dimensions shown are at the bottom of the concrete.
⊟ Indicates piling to be battered in the direction shown. Batter shall be 3:12.

FOOTING AND PILING LAYOUT

HNTB

DIVISION OF HIGHWAYS

CONSTRUCTION LAYOUT
AND
FOOTING AND PILING LAYOUT
(RAMP B)

Designer	T. Stauffer	Structure Numbers	F-17-IT
Detailer	R. Gordon		
Drawing Number B-7		of 32	Drawings

Revision Dates (Preliminary Stage Only)

CHECKED BY	D.W.H.	2-84	QUANTITIES BY
DETAILED BY	R.D.G.	3-84	CHECKED BY
DWN.	T.N.S.	3-84	

AS CONSTRUCTED			
NO REVISIONS	11-6-86	REVISED	VOID

FEDERAL ROAD REGION NO.	DIVISION	PROJ. NO.	SHEET NO.	TOTAL SHEETS
VIII	COLORADO	I 25-2(154)	15	79

REVISIONS		

QUANTITIES BY	J.W.H.	3-84
CHECKED BY	T.N.S.	3-84
DETAILED BY	R.D.G.	12

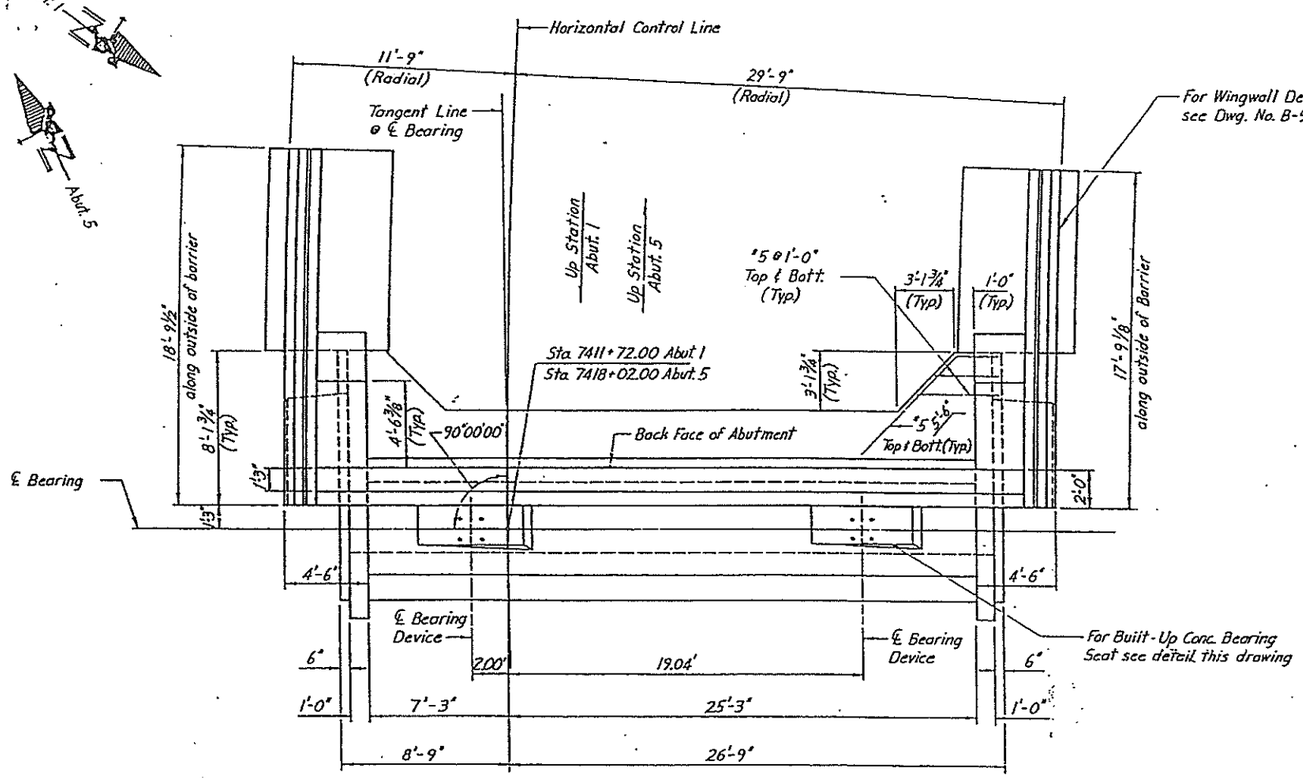

PLAN

Note: Abutment 1 shown, Abutment 5 opposite hand.

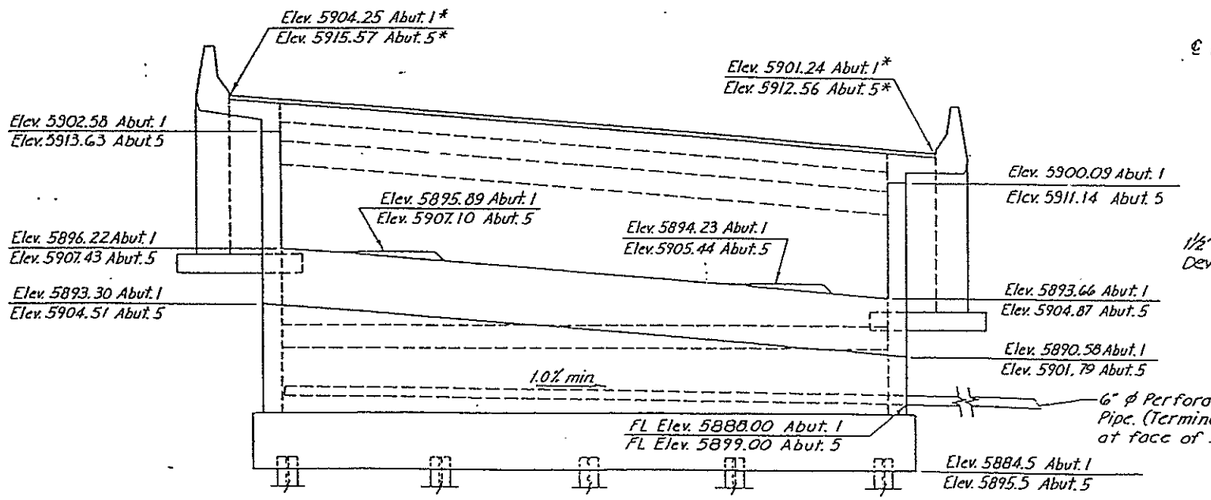

ELEVATION

* Elevations are at Back Face of Abutment, Finished Grade.
Note: Abutment 1 shown, Abutment 5 opposite hand.

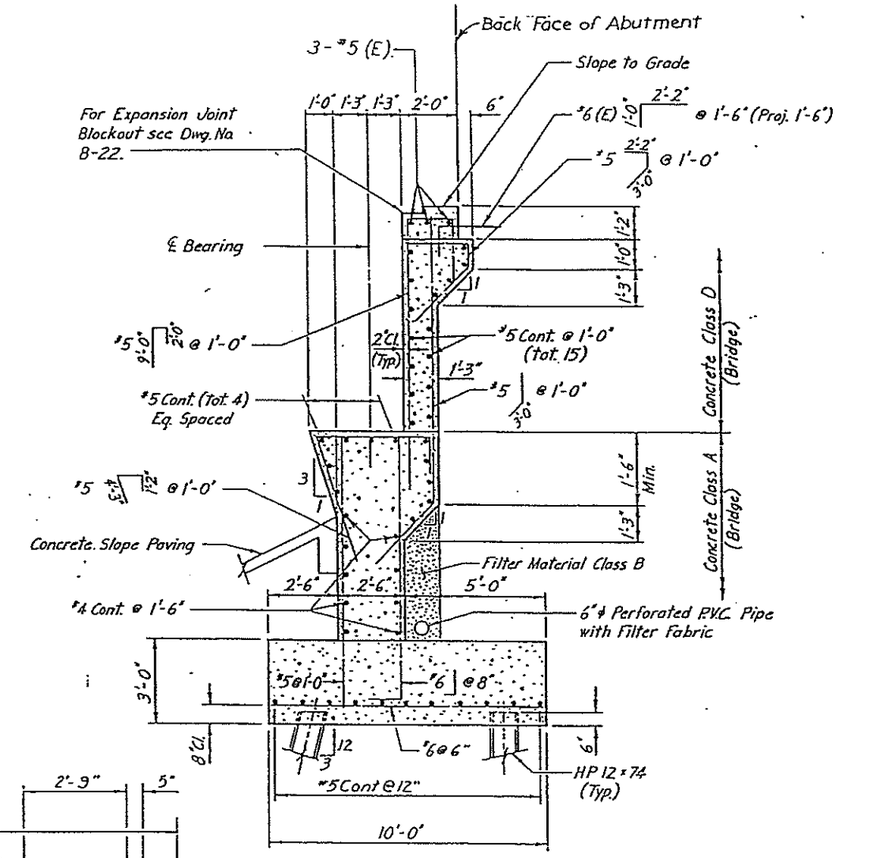

TYPICAL SECTION

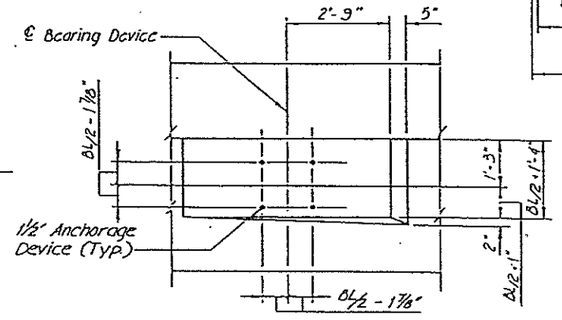

PLAN

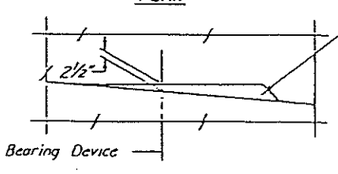

ELEVATION

BUILT UP CONCRETE BEARING SEAT

Note: For Dimension "BL", see Dwg. No. B-24

(E) - Denotes epoxy coated bars.

HNTB

DIVISION OF HIGHWAYS

ABUTMENT DETAILS

(RAMP B)

Designer J. Vaughn	Structure Numbers	F-17-IT
Detailer R. Gordon		
Drawing Number B-8	of 32	Drawings

AS CONSTRUCTED			
NO REVISIONS 11-6-56	REVISED	VOID	

FEDERAL ROAD REGION NO.	DIVISION	PROJ. NO.	SHEET NO.	TOTAL SHEETS
VIII	COLORADO	I 25 - 2(154)	16	79

REVISIONS			
R-1	10-17-84	Added Note.	L.E.G.

QUANTITIES BY	B.W.H.	3-08
CHECKED BY	T.M.S.	3-08
DRAWN BY	D.M.L.	3-08
DETAILED BY	R.D.G.	12
CHECKED BY		
DETAILED BY		

R-1 Concrete Class A (Wall)

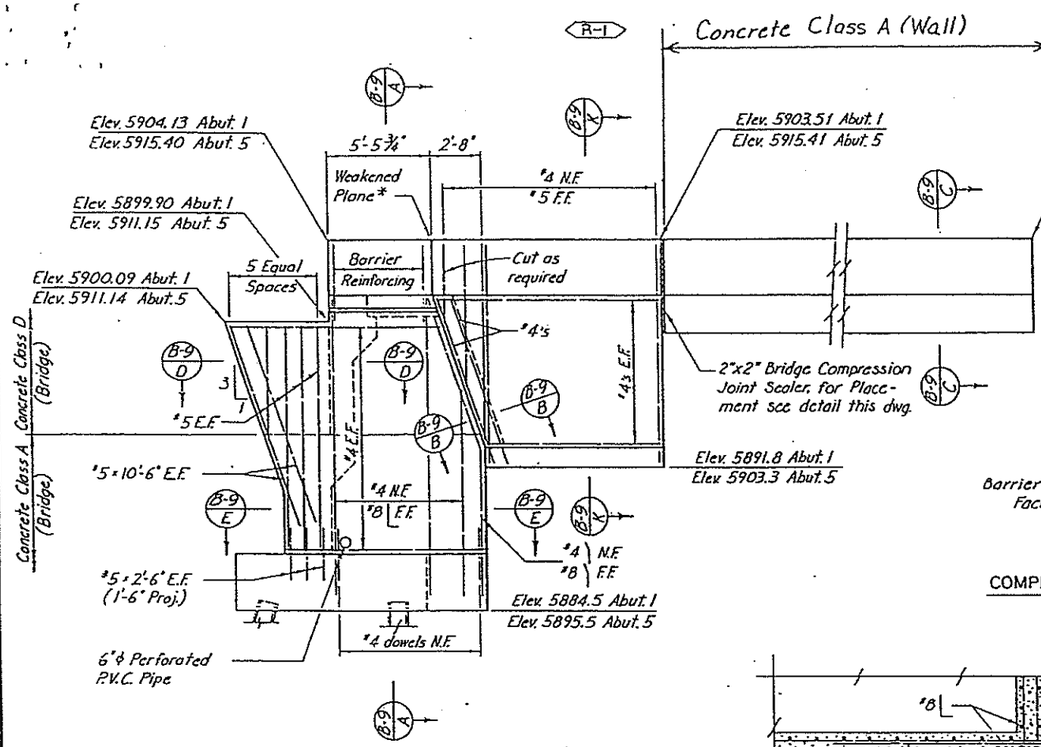

ELEVATION NORTH WINGWALLS

Note: Elevation for Abut. 1 wingwall shown, Abut. 5 wingwall opposite hand.
* Along perimeter of barrier only.

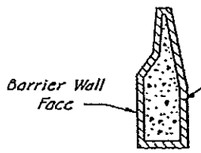

COMPRESSION JOINT SEALER PLACEMENT

R-1 Concrete Class A (Wall)

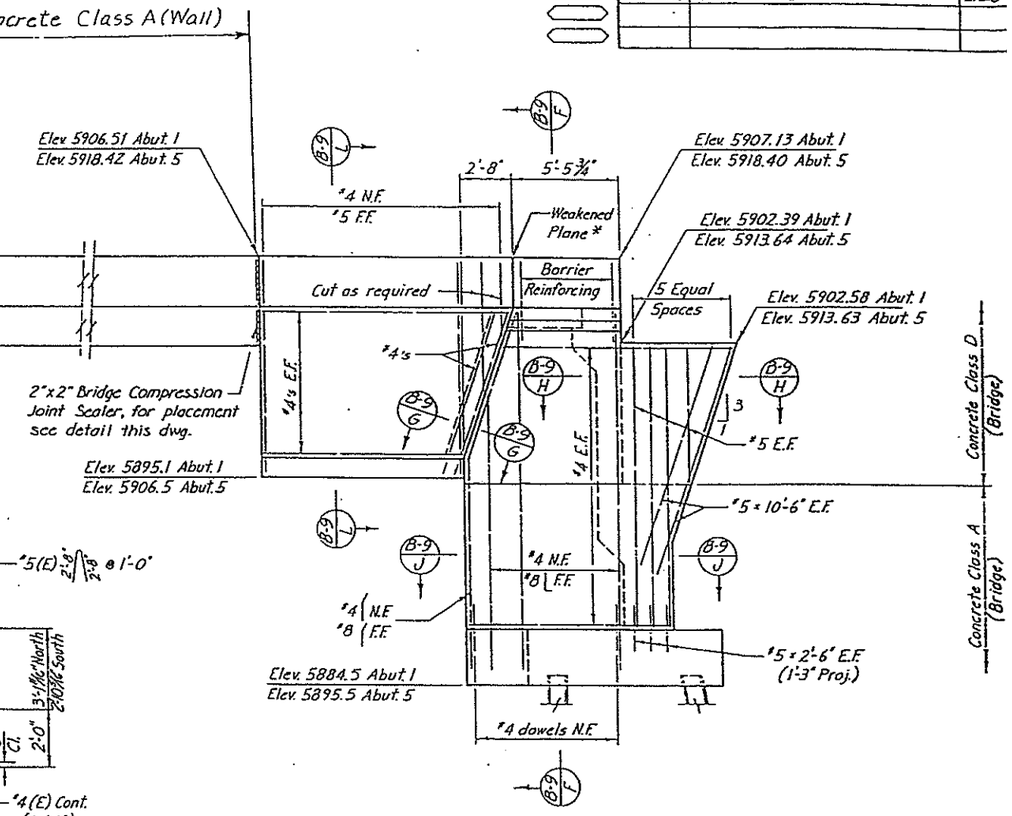

ELEVATION SOUTH WINGWALLS

Note: Elevation for Abut. 1 wingwall shown, Abut. 5 wingwall opposite hand.
* Along perimeter of barrier only.

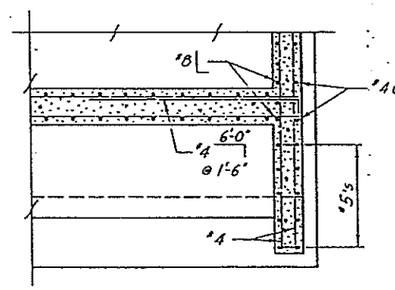

SECTION B-9 D / B-9 H

Note: Section D shown, Section H opposite hand.

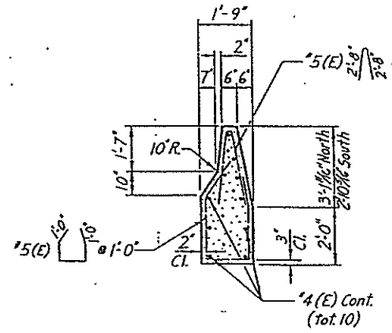

SECTION B-9 C

Note: For length of barrier see Dwg. No. B-5 & B-7.

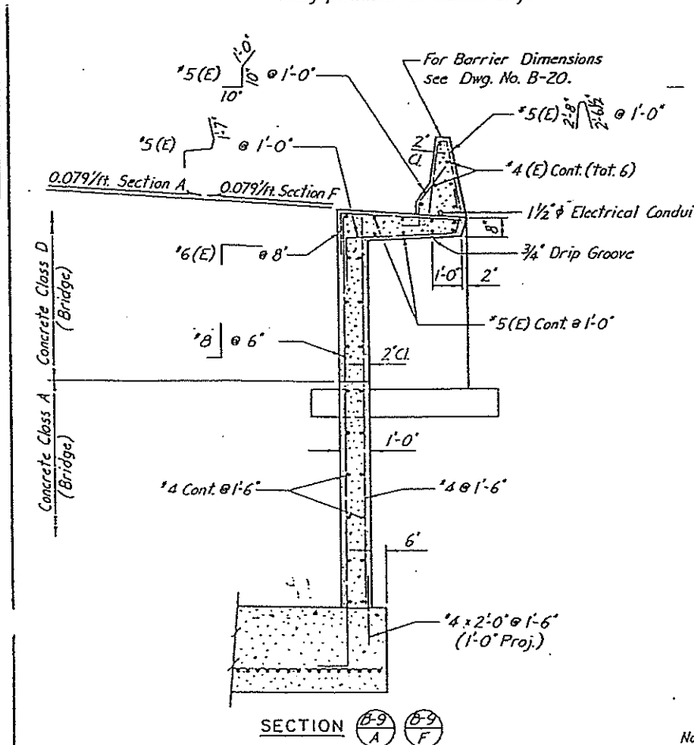

SECTION B-9 A / B-9 F

Note: Section A shown, Section F opposite hand and similar except as noted.

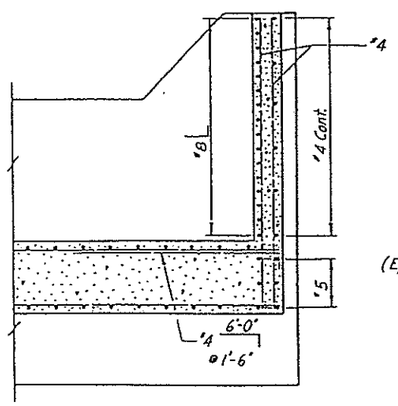

SECTION B-9 E / B-9 J

Note: Section E shown, Section J opposite hand.

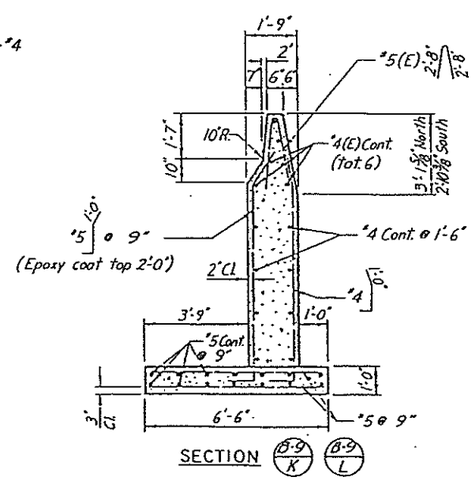

SECTION B-9 K / B-9 L

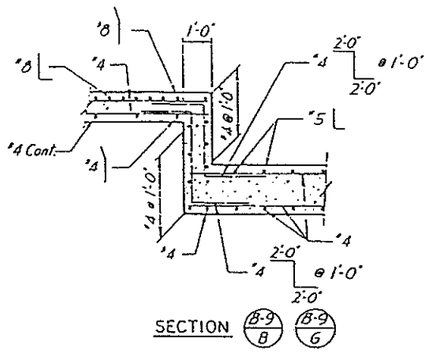

SECTION B-9 B / B-9 G

Note: Section B shown, Section G is opposite hand.

(E) - Denotes epoxy coated bars.

DIVISION OF HIGHWAYS

WINGWALL DETAILS

(RAMP B)

Designer J. Vaughn		Structure Numbers	F-17-IT
Detailer R. Gordon			
Drawing Number B-9	of 32		Drawings

1 Revision Date (Preliminary Stage Only)

AS CONSTRUCTED				
NO REVISIONS 11-6-86	REVISED		VOID	

FEDERAL ROAD REGION NO.	DIVISION	PROJ. NO.	SHEET NO.	TOTAL SHEETS
VIII	COLORADO	I25-2(154)	17	79

REVISIONS

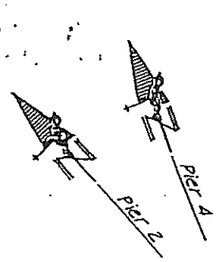

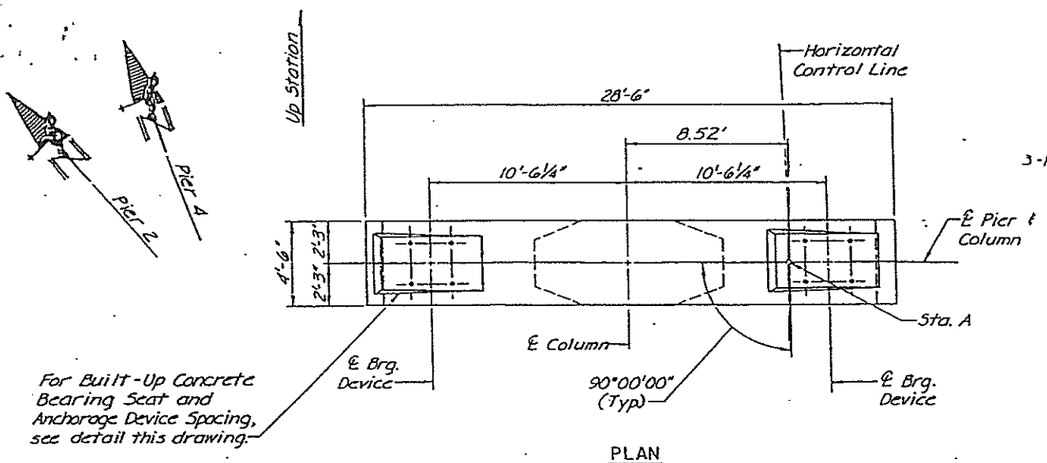

PLAN

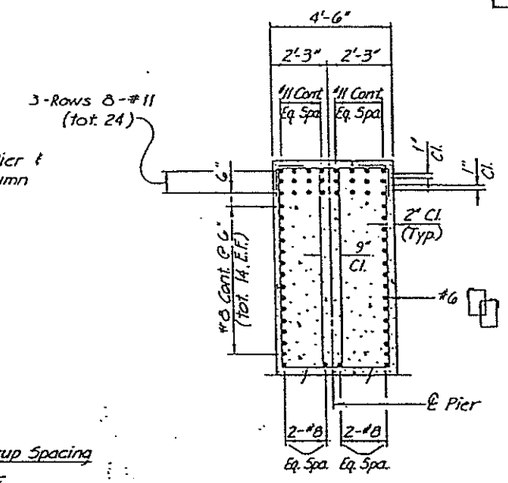

SECTION B-10/A

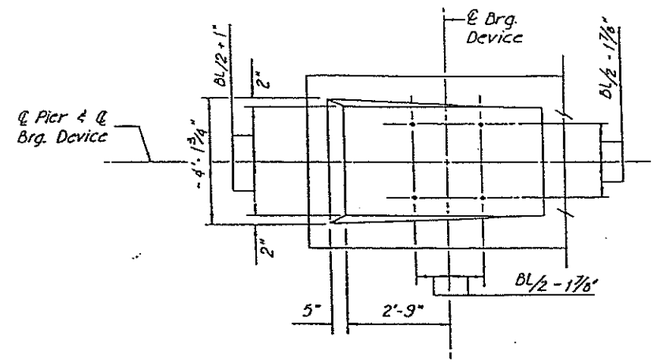

PLAN

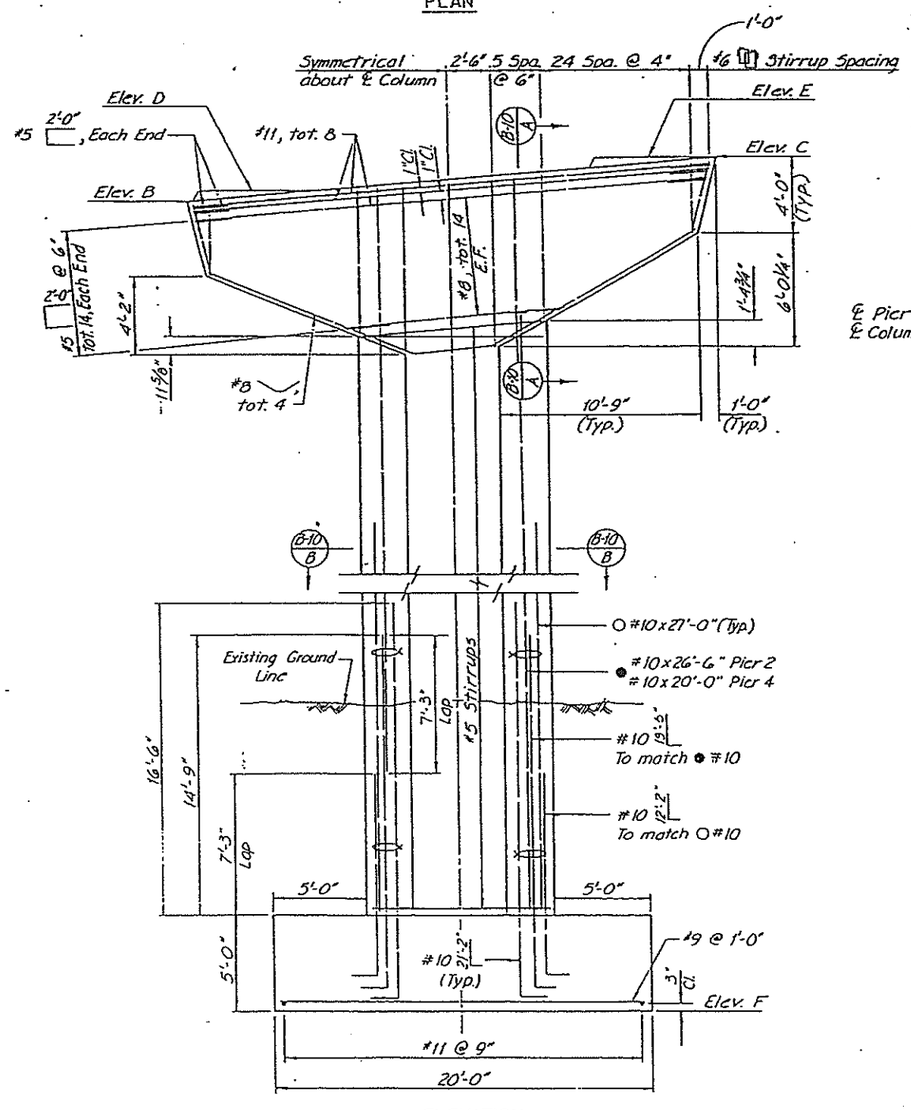

ELEVATION

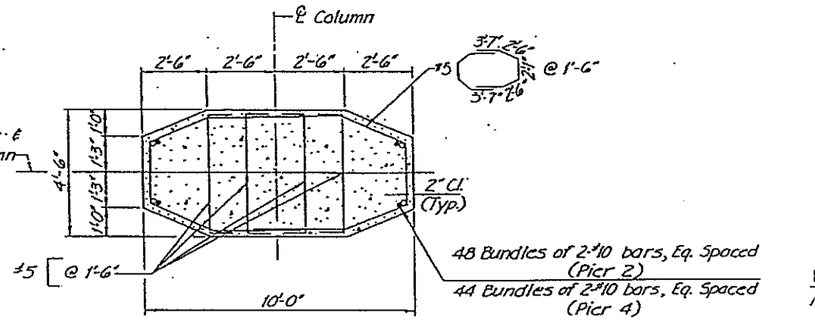

SECTION B-10/B

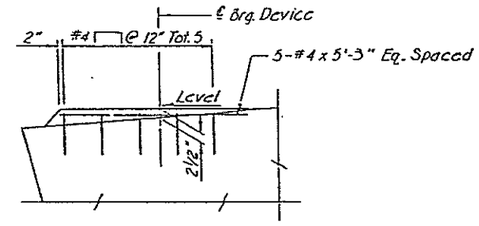

ELEVATION

BUILT-UP CONCRETE BEARING SEAT

Note: For Dimension "BL" see Dwg. No. B-24.

	Pier 2	Pier 4
Sta. A	7413+02.00	7416+57.00
Elev. B	5897.62	5904.07
Elev. C	5899.89	5906.30
Elev. D	5898.13	5904.58
Elev. E	5899.80	5906.22
Elev. F	5859.00	5872.00

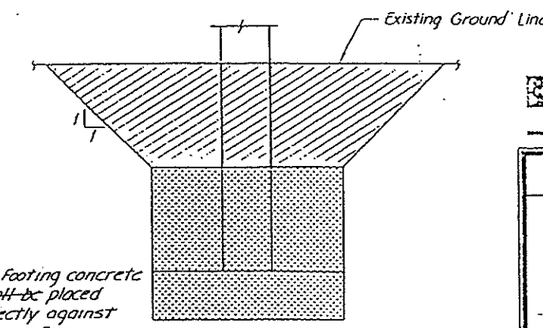

Note: Footing concrete was ~~shall be~~ placed directly against rock surface.

LIMITS OF EXCAVATION

☐ Sand & Clay Excavation

⊠ Rock Excavation

All Excavation ~~to be~~ included in Item 206 Structure Excavation

HNTB

DIVISION OF HIGHWAYS

PIERS 2 AND 4 DETAILS

(RAMP B)

Designer	B. Haynes	Structure Numbers	F-17-IT
Detailer	C. Meyers		
Drawing Number B-10		of 32	Drawings

Revision Dates (Preliminary Stage Only)

CHECKED BY D.M.J. 1-84 | DETAILED BY C.E.M. 1-84 | QUANTITIES BY | CHECKED BY | 3-84

AS CONSTRUCTED			
NO REVISIONS 11-6-86	REVISED		VOID

FEDERAL ROAD REGION NO.	DIVISION	PROJ. NO.	SHEET NO.	TOTAL SHEETS
VIII	COLORADO	125-2(154)	18	79

REVISIONS

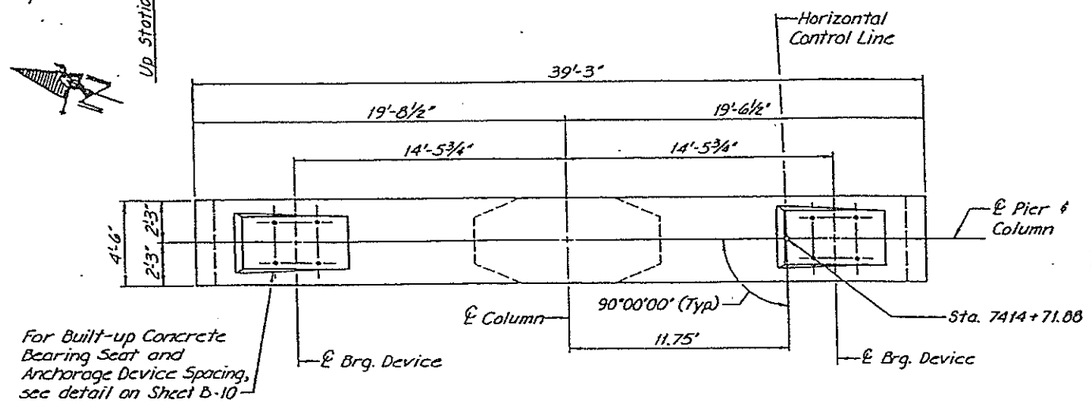

PLAN

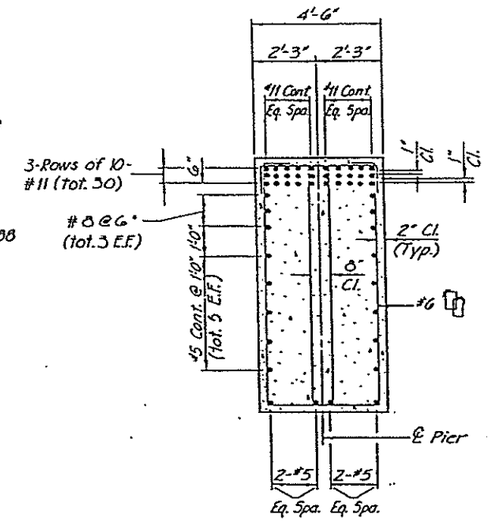

SECTION B-11/A

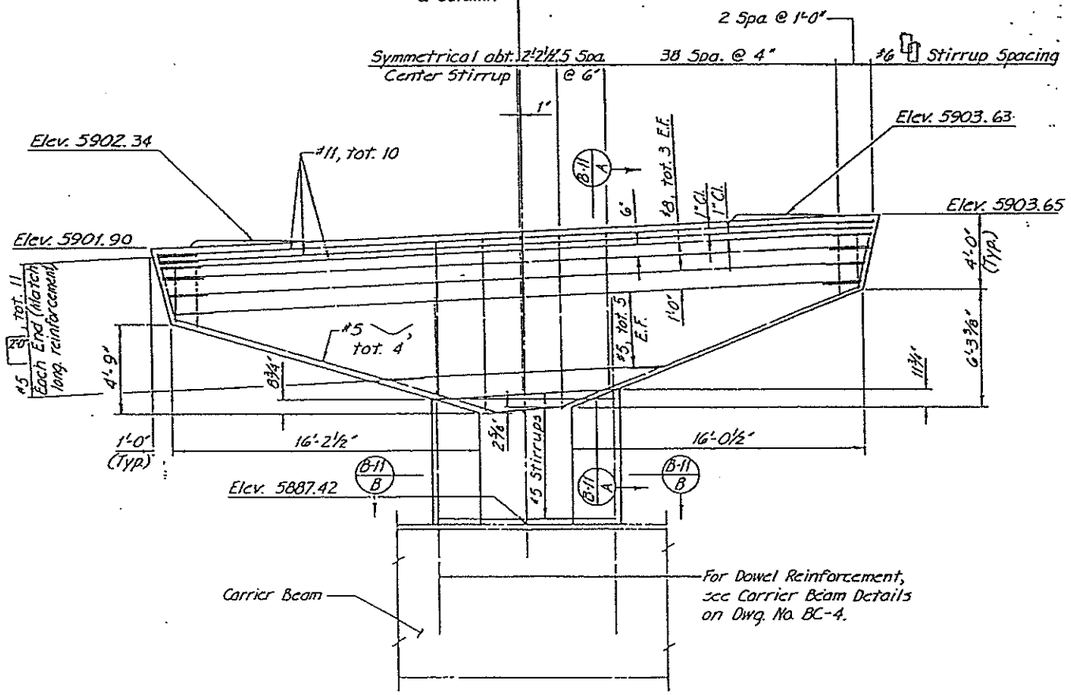

ELEVATION

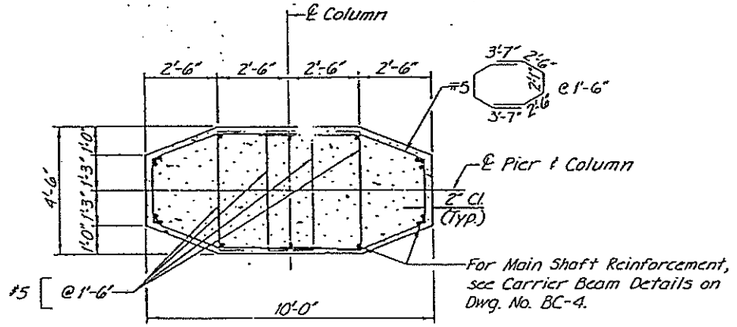

SECTION B-11/B

DESIGNED BY	B.W.H.	3-84
CHECKED BY	D.M.J.	3-84
DETAILED BY	C.E.M.	3-84
QUANTITIES BY	B.W.H.	3-84
CHECKED BY	T.N.S.	3-84

DRAWING 44 132 40-0

EINTE

DIVISION OF HIGHWAYS

PIER 3 DETAILS

(RAMP B)

Designer B. Haynes	Structure Numbers	F-17-IT	
Detailer C. Meyers			
Drawing Number B-11	of	32	Drawings

AS CONSTRUCTED			
NO REVISIONS	11-6-86	REVISED	VOID

FEDERAL ROAD REGION NO.	DIVISION	PROJ. NO.	SHEET NO.	TOTAL SHEETS
VIII	COLORADO	125 - 2(154)	19	79

REVISIONS		

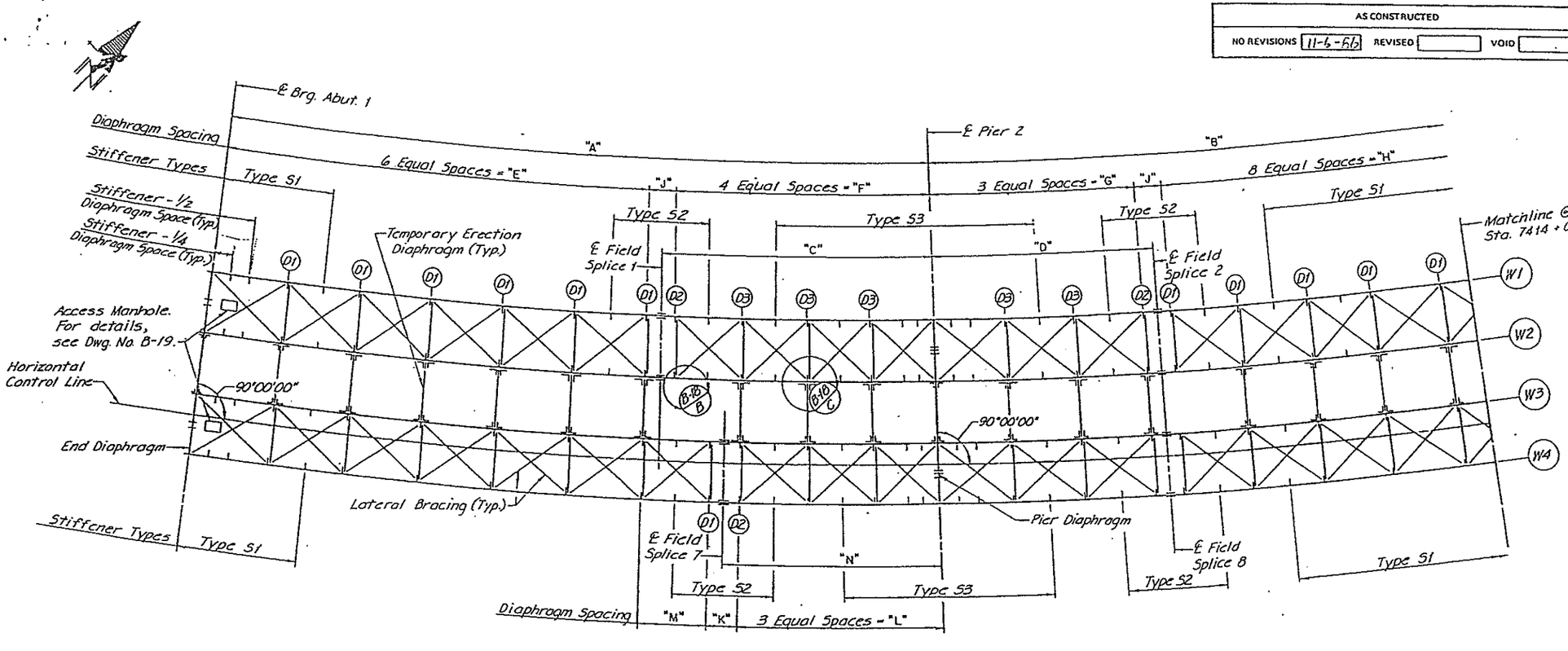

FRAMING PLAN

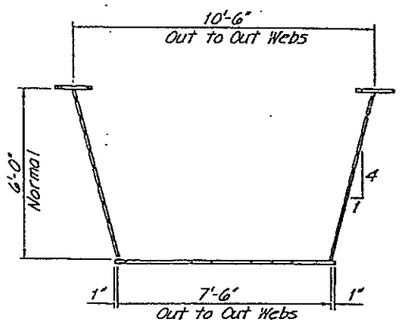

BOX GIRDER GEOMETRY

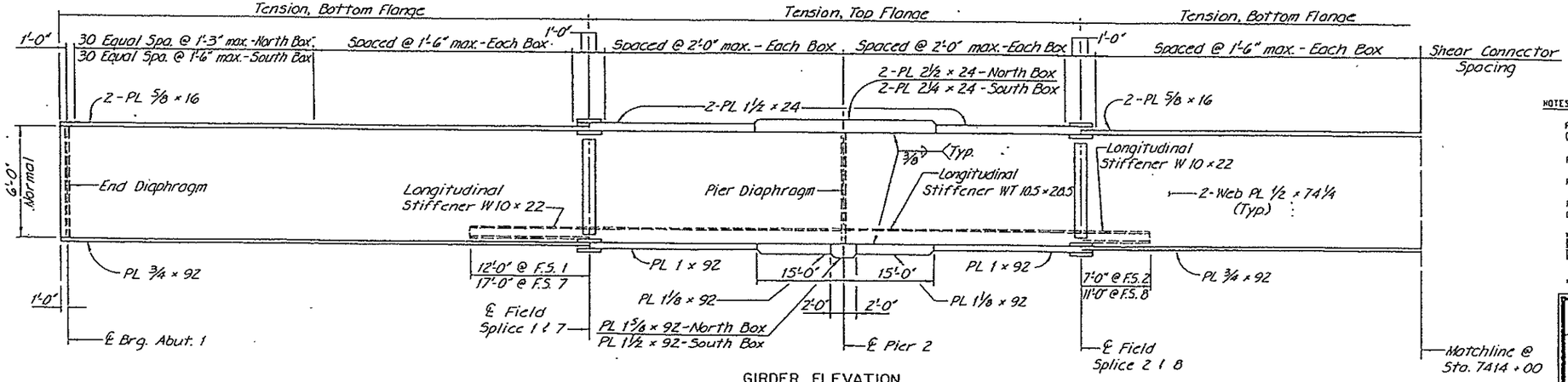

GIRDER ELEVATION

Dimension	"A"	"B"	"C"	"D"	"E"	"F"	"G"	"H"	"J"	"K"	"L"	"M"	"N"
Web "W1"	125'-11 1/16"	187'-9 7/16"	46'-8 3/16"	39'-1 1/8"	76'-8 13/16"	44'-2 3/16"	36'-7 1/8"	72'-8 1/16"	5'-0"	——	——	——	——
Web "W2"	127'-7 9/16"	180'-1 1/2"	47'-3 1/16"	39'-8 5/16"	77'-9 7/16"	44'-9 3/8"	37'-1 1/8"	73'-8 3/8"	5'-0 1/8"	——	——	——	——
Web "W3"	129'-4 1/16"	172'-6 7/16"	——	40'-2 1/16"	78'-10 3/16"	——	37'-8"	74'-8 1/16"	5'-1 3/8"	5'-0"	34'-0 3/16"	11'-5 13/16"	36'-6 3/16"
Horizontal Control Line	130'-0"	169'-10 3/16"	48'-2 1/4"	40'-5 1/16"	79'-2 3/4"	45'-7 1/4"	37'-10 1/16"	75'-0 1/16"	5'-2"	5'-0 1/4"	34'-2 1/2"	11'-6 1/2"	36'-8 5/16"
Web "W4"	131'-1 3/16"	165'-1 7/16"	——	40'-9 1/16"	79'-10 7/8"	——	38'-1 5/16"	75'-8 3/8"	5'-2 1/2"	5'-0 3/4"	34'-6"	11'-7 11/16"	37'-0 7/8"

GIRDER DIMENSION SCHEDULE

Note: All dimensions are at top outside of webs.

NOTES:

FOR FLANGE PLATES WITH THICKNESS EXCEEDING 2" USE AASHTO M-222 (ASTM A-588) STRUCTURAL STEEL.

FOR END & PIER DIAPHRAGM DETAILS, SEE DWG. NO. B-16.

FOR LONGITUDINAL STIFFENERS & FIELD SPLICE DETAILS, SEE DWG. NO. B-17

FOR INTERMEDIATE DIAPHRAGMS, TRANSVERSE STIFFENERS & LATERAL BRACING DETAILS, SEE DWG. NO. B-18.

HINTES

DIVISION OF HIGHWAYS

FRAMING PLAN
AND
GIRDER ELEVATION
(RAMP B)

Designer R. Hedrick	Structure Numbers	F-17-IT
Detailer C. Meyers		
Drawing Number B-12	of 32	Drawings

CHECKED BY			
DETAILED BY	D.M.J.	3-'94	
CHECKED BY	C.E.M.	3-'94	
QUANTITIES BY	J.H.H.	3-'94	
CHECKED BY	T.N.S.	3-'94	

AS CONSTRUCTED			
NO REVISIONS	11-6-86	REVISED	VOID

FEDERAL ROAD REGION NO.	DIVISION	PROJ. NO.	SHEET NO.	TOTAL SHEETS
VIII	COLORADO	I25-2(154)	20	79

REVISIONS		

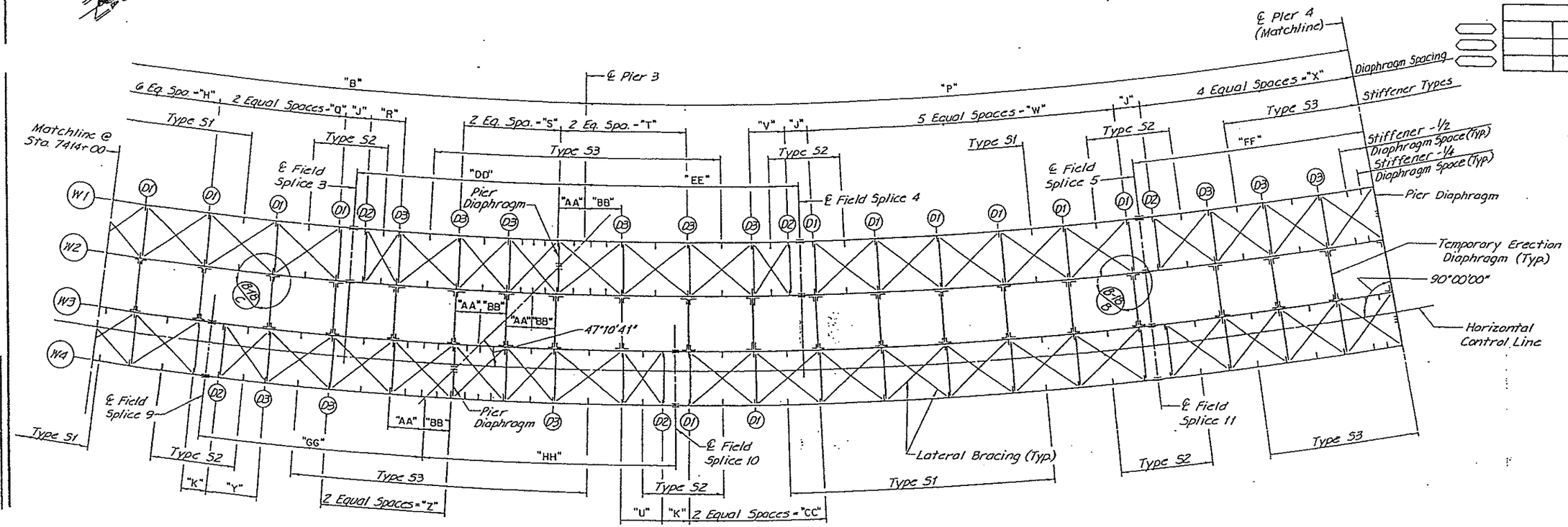

FRAMING PLAN

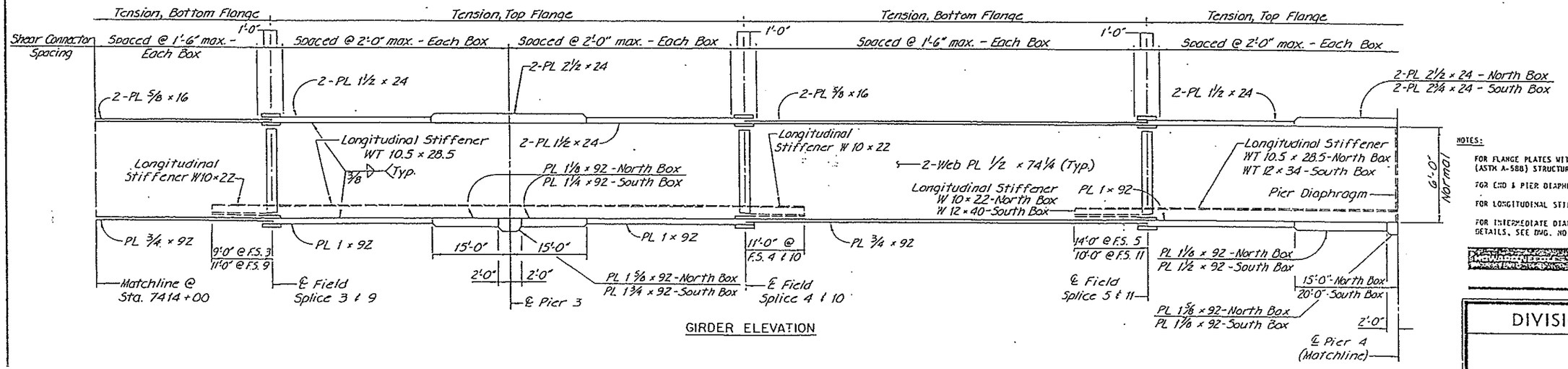

GIRDER ELEVATION

NOTES:

FOR FLANGE PLATES WITH THICKNESS EXCEEDING 2" USE AASHTO M-222 (ASTM A-588) STRUCTURAL STEEL.

FOR END & PIER DIAPHRAGM DETAILS, SEE DWG. NO. B-16.

FOR LONGITUDINAL STIFFENERS & FIELD SPLICE DETAILS, SEE DWG. NO. B-12

FOR INTERMEDIATE DIAPHRAGMS, TRANSVERSE STIFFENERS & LATERAL BRACING DETAILS, SEE DWG. NO. B-18.

HNTB

Dimension	"P"	"Q"	"R"	"S"	"T"	"U"	"V"	"W"	"X"	"Y"	"Z"	"AA"	"BB"	"CC"	"DD"	"EE"	"FF"	"GG"	"HH"
Web "W1"	156'-0 11/16"	26'-1 7/8"	6'-4 1/4"	19'-6 3/16"	25'-5 3/8"	——	7'-4 3/8"	62'-3 11/16"	43'-8 3/16"	——	22'-8 7/16"	5'-1 1/4"	7'-7 1/16"	24'-8 9/16"	44'-10"	42'-6 7/16"	46'-2 7/16"	——	——
Web "W2"	168'-5 3/16"	26'-5 1/8"	6'-5 1/4"	19'-9 1/2"	25'-9 9/16"	——	7'-5 1/2"	63'-1 1/16"	44'-3 3/8"	——	23'-0 3/16"	4'-9 1/8"	5'-0 7/8"	25'-0 9/16"	35'-2 3/8"	53'-4 3/16"	46'-9 7/16"	——	——
Web "W3"	180'-9 5/16"	26'-10 1/4"	——	20'-0 3/4"	26'-1 3/4"	8'-0 1/8"	——	64'-0 7/16"	44'-10 5/8"	8'-5 1/8"	23'-3 9/16"	4'-10 5/16"	5'-2 3/16"	25'-4 13/16"	——	——	47'-5 1/16"	52'-6 3/16"	38'-10 5/16"
Horizontal Control Line	185'-1 7/16"	26'-11 3/4"	6'-6 5/8"	20'-1 7/8"	26'-3 1/4"	8'-1 3/16"	7'-7 1/4"	64'-3 1/4"	45'-1 1/8"	8'-5 3/8"	23'-5 1/4"	——	——	25'-6 1/4"	22'-3 1/16"	67'-11 5/16"	47'-8 1/16"	49'-3 11/16"	42'-6 3/16"
Web "W4"	192'-11 3/16"	27'-2 1/2"	——	20'-3 5/16"	26'-6"	8'-2 1/4"	——	64'-10 1/4"	45'-5 3/4"	8'-6 1/2"	23'-7 5/16"	7'-0"	4'-9 13/16"	25'-8 5/16"	——	——	48'-1"	43'-6"	49'-1 1/4"

GIRDER DIMENSION SCHEDULE

Note: All dimensions are at top outside of webs.

DIVISION OF HIGHWAYS

FRAMING PLAN AND GIRDER ELEVATION

(RAMP B)

Designer	R. Hedrick	Structure Numbers	F-17-IT
Detailer	C. Meyers		
Drawing Number	B-13	of 32	Drawings

DETAILED BY C.E.M. CHECKED BY T.M.S. 3-84

AS CONSTRUCTED			
NO REVISIONS 11-6-86	REVISED		VOID

FEDERAL ROAD REGION NO.	DIVISION	PROJ. NO.	SHEET NO.	TOTAL SHEETS
XIII	COLORADO	I25-2(154)	21	79

REVISIONS

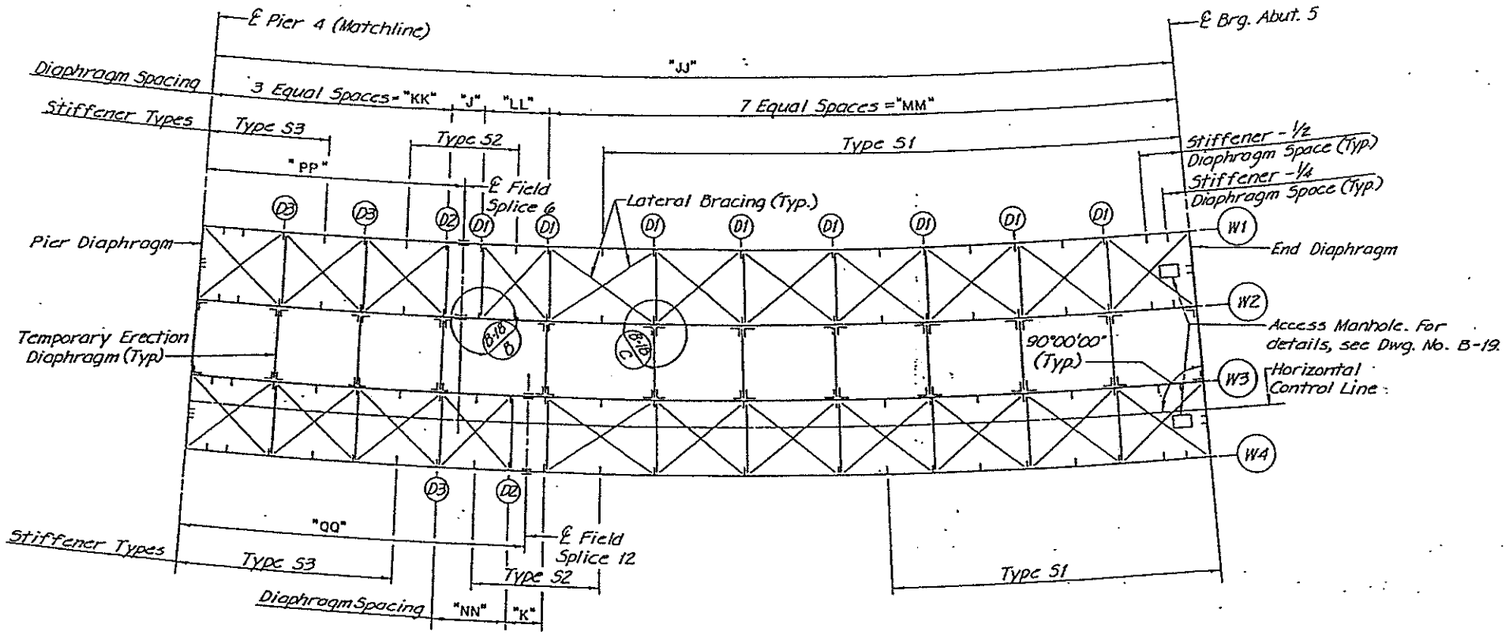

FRAMING PLAN

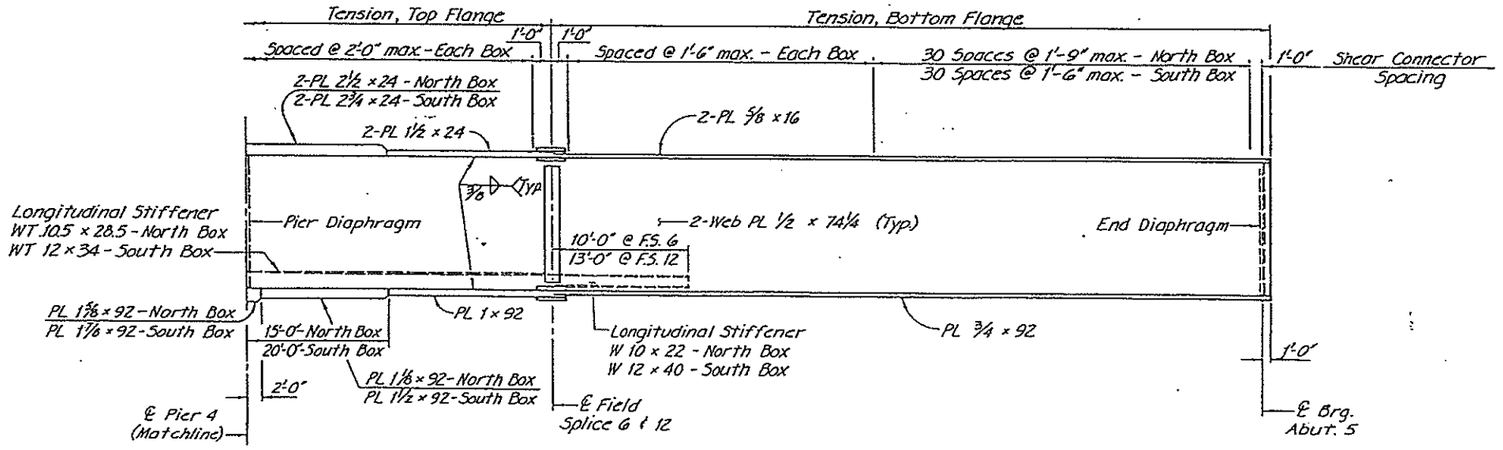

GIRDER ELEVATION

Dimension	"JJ"	"KK"	"LL"	"MM"	"NN"	"PP"	"QQ"
Web "W1"	140'-5 1/2"	34'-3"	9'-7 1/16"	91'-7 7/16"	———	36'-9"	———
Web "W2"	142'-4 9/16"	34'-8 9/16"	9'-8 11/16"	92'-10 3/8"	———	37'-3"	———
Web "W3"	144'-3 13/16"	35'-2 5/16"	———	94'-1 5/8"	9'-11 7/8"	———	47'-8 3/16"
Horizontal Control Line	145'-0"	35'-4 1/4"	9'-10 13/16"	94'-7"	10'-0 1/2"	37'-11 1/4"	47'-10 7/8"
Web "W4"	146'-2 7/8"	35'-7 7/8"	———	95'-4 11/16"	10'-1 9/16"	———	48'-3 13/16"

GIRDER DIMENSION SCHEDULE

Note: All dimensions are at top outside of webs.

NOTES:

FOR FLANGE PLATES WITH THICKNESS EXCEEDING 2" USE AASHTO M-222 (ASTM A-588) STRUCTURAL STEEL.

FOR END & PIER DIAPHRAGM DETAILS, SEE DWG. NO. B-16.

FOR LONGITUDINAL STIFFENERS & FIELD SPLICE DETAILS, SEE DWG. NO. B-1[illegible]

FOR INTERMEDIATE DIAPHRAGMS, TRANSVERSE STIFFENERS & LATERAL BRACING DETAILS, SEE DWG. NO. B-18.

HOWARD NEEDLES TAMMEN & BERGENDOFF HNTB

DIVISION OF HIGHWAYS

FRAMING PLAN
AND
GIRDER ELEVATION
(RAMP B)

Designer R. Hedrick	Structure Numbers	F-17-IT	
Detailer C. Meyers			
Drawing Number B-14	of	32	Drawings

Revision Dates (Preliminary Stage Only)

DESIGNED BY	C.E.M.	CHECKED BY	T.N.S.
DRAWN BY	3-84	QUANTITIES BY	3-84

AS CONSTRUCTED

NO REVISIONS 11-6-76 REVISED VOID

FEDERAL ROAD REGION NO.	DIVISION	PROJ. NO.	SHEET NO.	TOTAL SHEETS
VIII	COLORADO	I25-2(154)	22	79

REVISIONS		

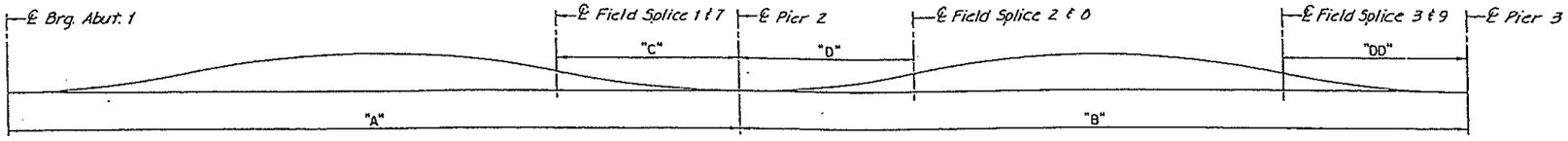

Twentieth Point	1.00	1.05	1.10	1.15	1.20	1.25	1.30	1.35	1.40	1.45	1.50	1.55	1.60	1.65	1.70	1.75	1.80	1.85	1.90	1.95	2.00	2.05	2.10	2.15	2.20	2.25	2.30	2.35	2.40	2.45	2.50	2.55	2.60	2.65	2.70	2.75	2.80	2.85	2.90	2.95	3.00
Girder Dead Load Deflection (Ft.) Webs 1 ℄ 2	.000	.005	.009	.013	.015	.017	.019	.019	.019	.018	.016	.014	.011	.009	.007	.004	.002	.000	-.001	-.001	.000	.004	.010	.018	.026	.035	.043	.050	.055	.057	.057	.054	.049	.042	.034	.026	.019	.012	.007	.003	.000
Girder Dead Load Deflection (Ft.) Webs 3 ℄ 4	.000	.007	.013	.019	.023	.027	.030	.031	.032	.031	.029	.026	.022	.020	.016	.012	.009	.006	.003	.001	.000	.001	.003	.006	.011	.016	.020	.024	.027	.029	.029	.028	.025	.021	.016	.011	.007	.003	.001	.000	.000
Total Dead Load-Girder Dead Load Deflect(Ft)W1 ℄ 2	.000	.016	.032	.046	.057	.065	.069	.069	.066	.060	.052	.043	.032	.023	.014	.006	.000	-.004	-.006	-.005	.000	.022	.050	.084	.123	.162	.199	.232	.256	.267	.264	.253	.232	.198	.159	.124	.091	.061	.038	.020	.000
Total Dead Load-Girder Dead Load Deflect(Ft)W3 ℄ 4	.000	.26	.051	.073	.092	.106	.116	.120	.121	.116	.108	.097	.082	.070	.056	.040	.029	.017	.009	.003	.000	.006	.016	.031	.049	.068	.087	.104	.116	.122	.122	.115	.103	.086	.066	.047	.030	.015	.006	.002	.000
Total Dead Load Deflection (Ft.) Webs 1 ℄ 2	.000	.021	.041	.059	.072	.082	.088	.088	.085	.078	.068	.057	.043	.032	.021	.010	.002	-.004	-.007	-.006	.000	.026	.060	.102	.149	.197	.242	.282	.311	.324	.321	.307	.281	.240	.193	.150	.110	.073	.045	.023	.000
Total Dead Load Deflection (Ft.) Webs 3 ℄ 4	.000	.033	.064	.092	.115	.133	.146	.151	.153	.147	.137	.123	.104	.090	.072	.052	.038	.023	.012	.004	.000	.007	.019	.037	.060	.084	.107	.128	.143	.151	.151	.143	.128	.107	.082	.058	.037	.018	.007	.002	.000
Vertical Curve Correction (Ft.) Webs 1 ℄ 2	.000	.000	.039	.055	.069	.081	.090	.098	.103	.107	.108	.107	.103	.098	.090	.081	.069	.055	.039	.020	.000	.044	.082	.116	.145	.171	.191	.207	.218	.225	.227	.225	.218	.207	.191	.171	.145	.116	.082	.044	.000
Vertical Curve Correction (Ft.) Webs 3 ℄ 4	.000	.020	.039	.055	.069	.081	.090	.098	.103	.107	.108	.107	.103	.098	.090	.081	.069	.055	.039	.020	.000	.034	.065	.093	.116	.136	.152	.165	.174	.179	.181	.179	.174	.165	.152	.136	.116	.093	.065	.034	.000

For dimensions, see Dwg. Nos. B-12, B-13, ℄ B-14.

SPANS 1 & 2

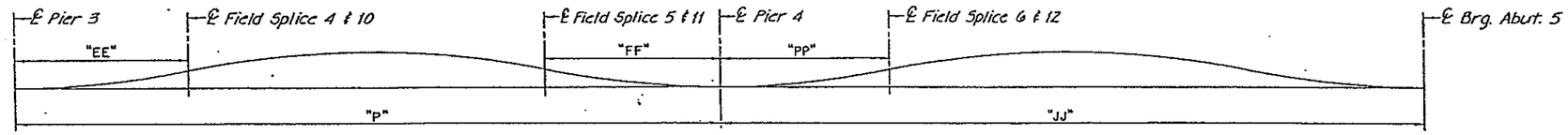

Twentieth Point	3.00	3.05	3.10	3.15	3.20	3.25	3.30	3.35	3.40	3.45	3.50	3.55	3.60	3.65	3.70	3.75	3.80	3.85	3.90	3.95	4.00	4.05	4.10	4.15	4.20	4.25	4.30	4.35	4.40	4.45	4.50	4.55	4.60	4.65	4.70	4.75	4.80	4.85	4.90	4.95	5.00
Girder Dead Load Deflection (Ft.) Webs 1 ℄ 2	.000	.000	.001	.001	.004	.007	.010	.013	.016	.017	.018	.017	.016	.013	.010	.007	.004	.001	.001	.000	.000	.001	.003	.005	.008	.012	.016	.021	.025	.029	.035	.039	.042	.044	.044	.043	.039	.034	.027	.019	.010	.000
Girder Dead Load Deflection (Ft.) Webs 3 ℄ 4	.000	.003	.006	.011	.017	.024	.031	.038	.044	.048	.049	.048	.045	.039	.031	.024	.017	.011	.006	.003	.000	.000	.002	.005	.008	.011	.016	.020	.023	.029	.033	.037	.040	.040	.040	.037	.032	.026	.018	.009	.000
Total Dead Load-Girder Dead Load Deflect.(Ft.)W1 ℄ 2	.000	-.008	-.013	-.011	-.005	.003	.011	.021	.029	.034	.037	.034	.029	.021	.012	.004	-.003	-.008	-.010	-.006	.000	.011	.026	.044	.065	.085	.109	.129	.144	.172	.193	.205	.217	.215	.207	.192	.165	.132	.091	.045	.000
Total Dead Load-Girder Dead Load Deflect.(Ft.)W3 ℄ 4	.000	.008	.018	.035	.059	.085	.113	.142	.165	.180	.185	.180	.167	.142	.112	.085	.057	.034	.018	.008	.000	.003	.010	.020	.034	.048	.066	.081	.095	.119	.139	.154	.168	.168	.168	.158	.137	.112	.078	.038	.000
Total Dead Load Deflection (Ft.) Webs 1 ℄ 2	.000	-.008	-.012	-.010	-.001	.010	.021	.034	.045	.051	.055	.051	.045	.034	.022	.011	.001	-.007	-.009	-.006	.000	.014	.031	.052	.077	.101	.130	.154	.173	.207	.232	.247	.261	.259	.250	.231	.199	.159	.110	.055	.000
Total Dead Load Deflection (Ft.) Webs 3 ℄ 4	.000	.011	.024	.046	.076	.109	.144	.180	.209	.228	.234	.228	.212	.181	.143	.109	.074	.045	.024	.011	.000	.003	.012	.025	.042	.059	.082	.101	.118	.148	.172	.191	.208	.208	.208	.195	.169	.138	.096	.047	.000
Vertical Curve Correction (Ft.) Webs 1 ℄ 2	.000	.033	.063	.090	.113	.132	.148	.160	.169	.175	.176	.175	.169	.160	.148	.132	.113	.090	.063	.033	.000	.025	.048	.068	.086	.100	.112	.122	.129	.132	.134	.132	.129	.122	.112	.100	.086	.068	.048	.025	.000
Vertical Curve Correction (Ft.) Webs 3 ℄ 4	.000	.042	.080	.113	.142	.166	.186	.202	.213	.219	.222	.219	.213	.202	.186	.166	.142	.113	.080	.042	.000	.025	.048	.068	.086	.100	.112	.122	.129	.132	.134	.132	.129	.122	.112	.100	.086	.068	.048	.025	.000

For dimensions, see Dwg. Nos. B-12, B-13, ℄ B-14.

SPANS 3 & 4

QUANTITIES BY | CHECKED BY | DETAILED BY | CHECKED BY

C.E.M. | 7-76 | C.E.M. | 7-76

HOWARD NEEDLES TAMMEN & BERGENDOFF HNTB

DIVISION OF HIGHWAYS

CAMBER DIAGRAM

(RAMP B)

Designer T. Stauffer	Structure Numbers	F-17-IT
Detailer C. Meyers		
Drawing Number B-15	of 32	Drawings

Revision Dates (Preliminary Stage Only)

AS CONSTRUCTED			
NO REVISIONS 11-6-86	REVISED	VOID	

FEDERAL ROAD REGION NO.	DIVISION	PROJ. NO.	SHEET NO.	TOTAL SHEETS
VIII	COLORADO	I 25 - 2(154)	23	79

REVISIONS		

DRAWN	J.W.H.	3-84
QUANTITIES BY	T.H.S.	3-84
CHECKED BY	R.A.H.	3-84
CHECKED BY	R.D.G.	3-84
DETAILED BY		

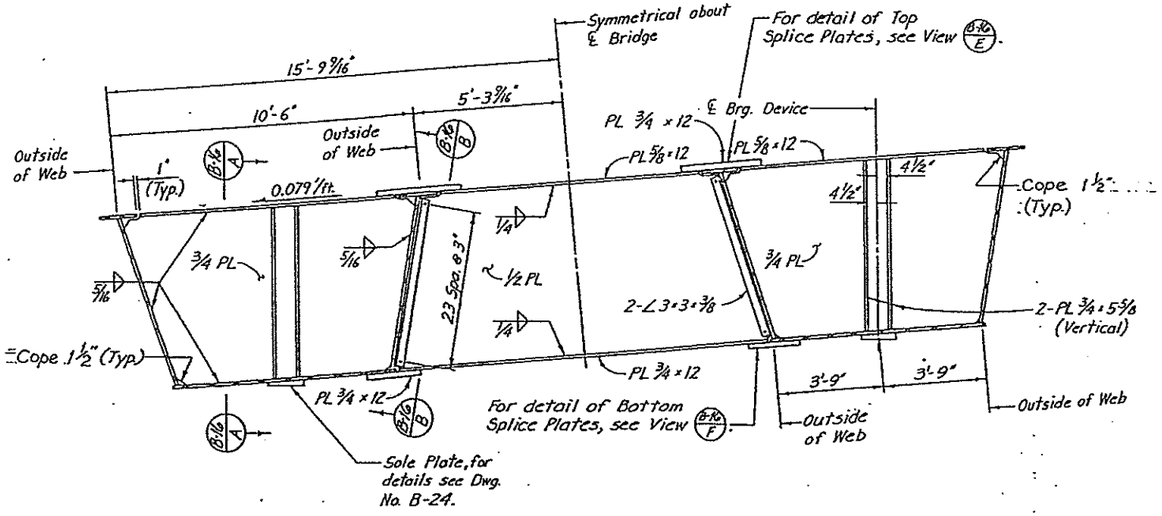

END DIAPHRAGM

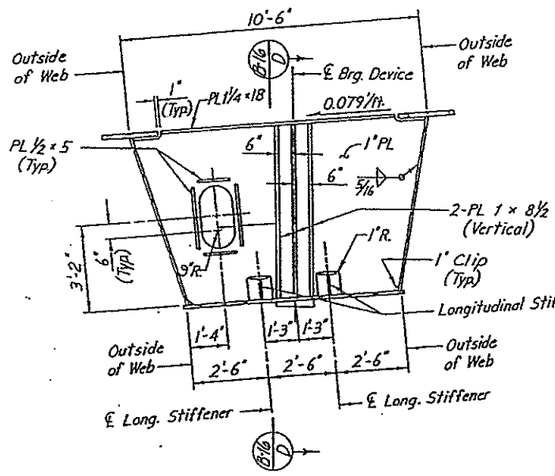

PIER DIAPHRAGM
PIER 3

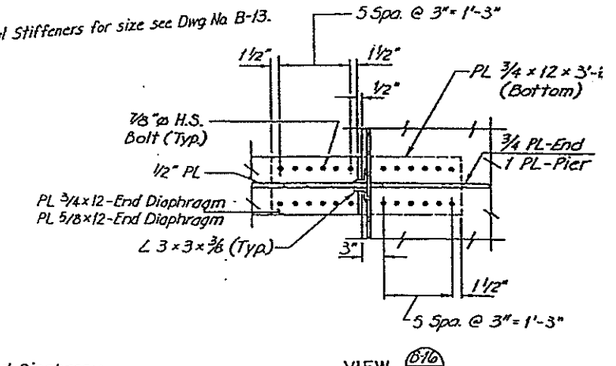

VIEW B-16 F

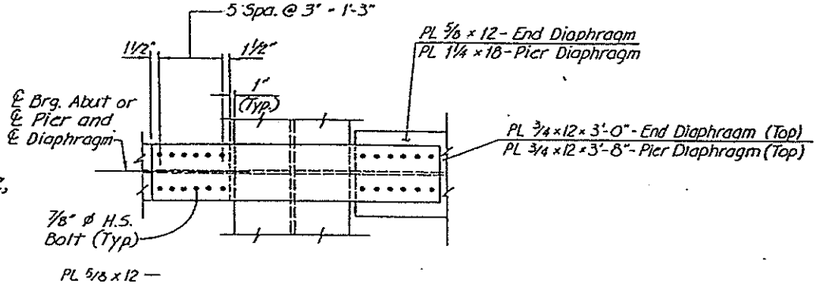

VIEW B-16 E

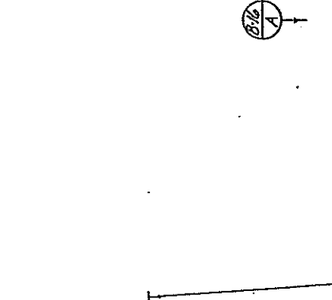

SECTION B-16 A

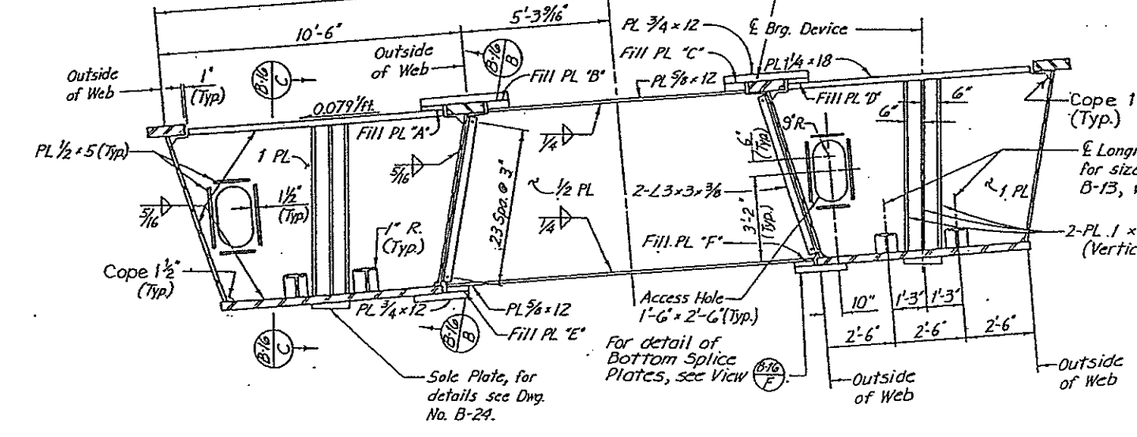

PIER DIAPHRAGM
PIERS 2 & 4

Note: Exposed edges of access holes shall be ground to a smooth finish.

FILL PL THICKNESS		
Fill PL	Pier 2	Pier 4
"A"	1 1/4"	1 1/4"
"B"	1 1/8"	1 7/8"
"C"	1 7/8"	2 1/8"
"D"	1"	1 1/2"
"E"	1"	1"
"F"	7/8"	1 1/4"

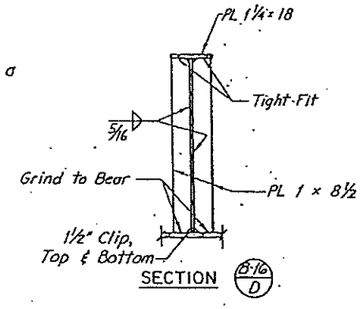

SECTION B-16 D

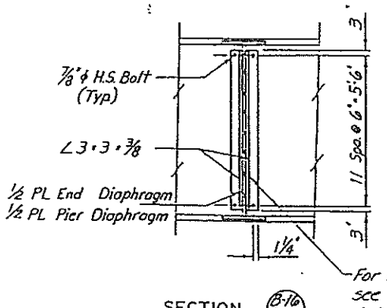

SECTION B-16 B

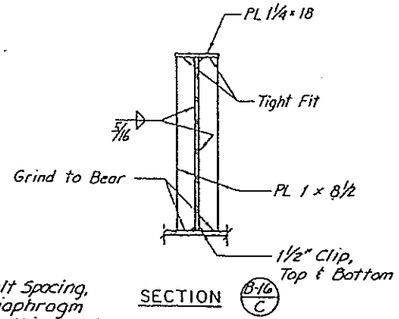

SECTION B-16 C

HIGHWAYS · BRIDGES · TUNNELS · ENGINEERING · PLANNING

DIVISION OF HIGHWAYS

END DIAPHRAGM
AND
PIER DIAPHRAGMS
(RAMP B)

Designer D. Jones	Structure Numbers	F-17-IT
Detailer R. Gordon		
Drawing Number B-16	of 32	Drawings

Revision Dates (Preliminary Stage Only)

AS CONSTRUCTED			
NO REVISIONS	11-6-86	REVISED	VOID

FEDERAL ROAD REGION NO.	DIVISION	PROJ. NO.	SHEET NO.	TOTAL SHEETS
VIII	COLORADO	125-2(154)	24	79

REVISIONS			

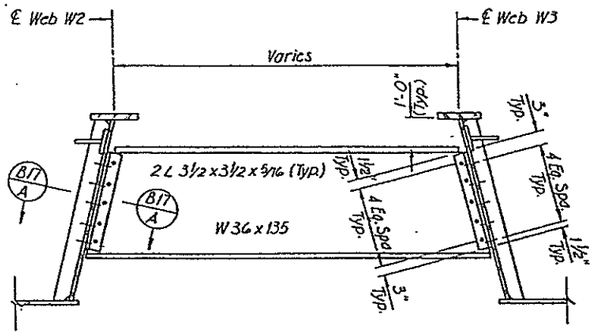

TEMPORARY ERECTION DIAPHRAGM

Note: Diaphragms between box girders were ~~shall be~~ in place during placement and curing of deck, after which these diaphragms ~~shall be~~ were removed with the exception of 7/8" ø H.S. bolts through the web.

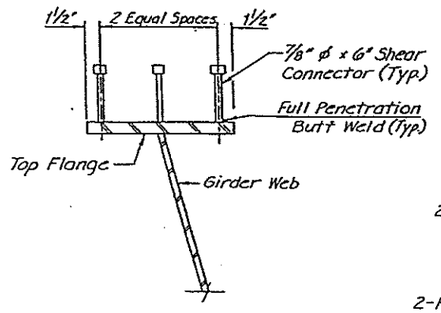

SHEAR CONNECTORS

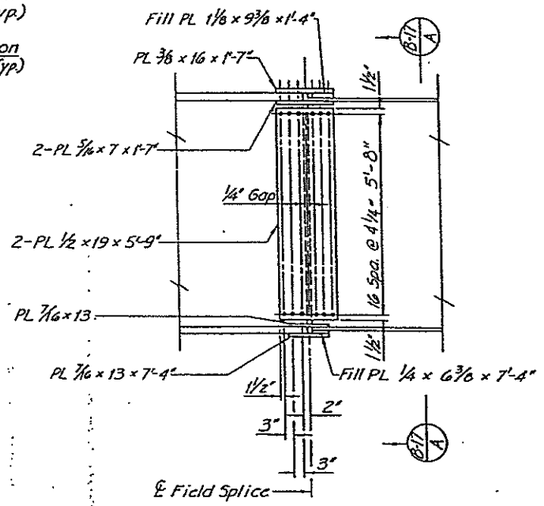

FIELD SPLICE 1

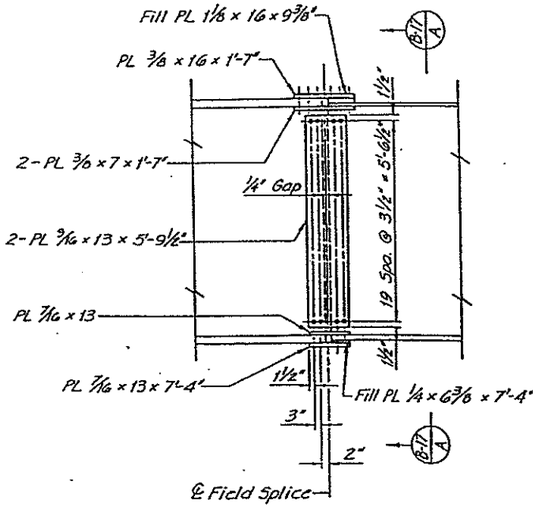

FIELD SPLICES 2 THRU 12

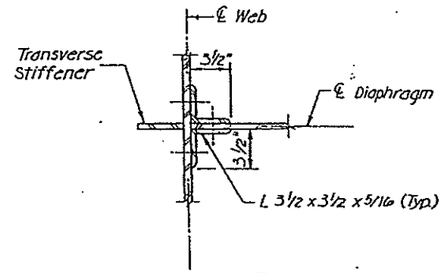

SECTION B-17 A

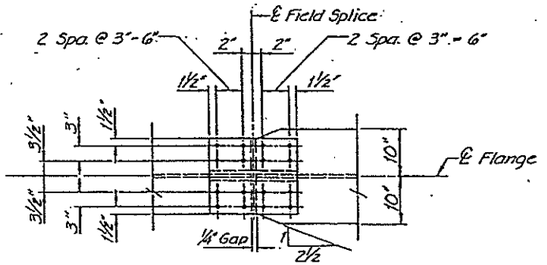

VIEW B-17 B

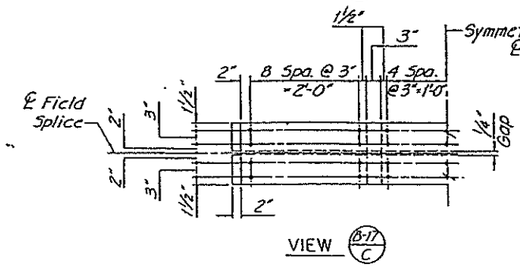

VIEW B-17 C

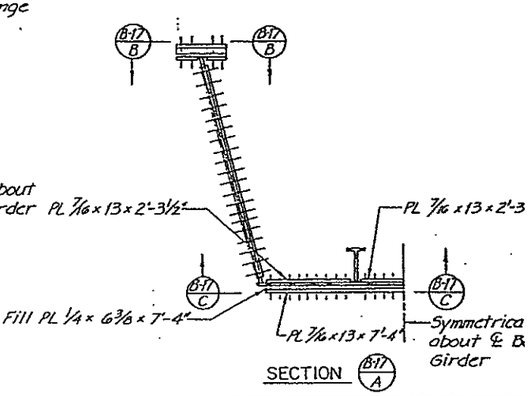

SECTION B-17 A

*For dimension, see Framing Plan & Girder Elevation on Dwg. Nos. B-12, B-13, and B-14.

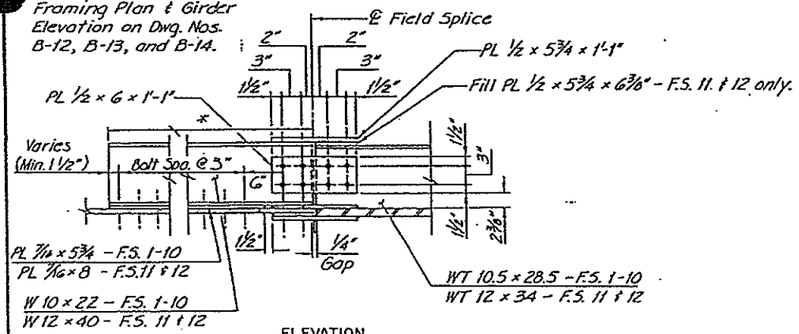

ELEVATION

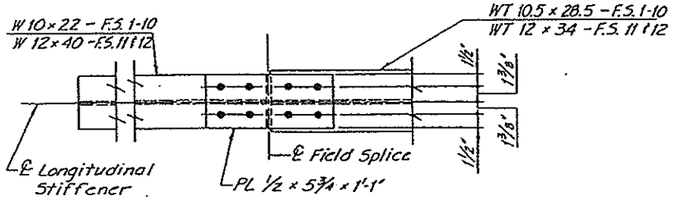

PLAN

LONGITUDINAL STIFFENERS

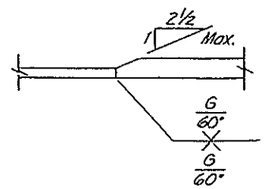

SHOP SPLICE DETAIL

DRAWN BY	R.A.H.	3-84
QUANTITIES BY		
CHECKED BY		
DETAILED BY	C.E.M.	3
CHECKED BY		

DIVISION OF HIGHWAYS

FIELD SPLICE
AND
LONGITUDINAL STIFFENERS
(RAMP B)

Designer	R. Hedrick	Structure Numbers	F-17-IT
Detailer	C. Meyers		
Drawing Number	B-17	of 32	Drawings

Revision Dates (Preliminary Stage Only)

AS CONSTRUCTED			
NO REVISIONS	11-6-86	REVISED	VOID

FEDERAL ROAD REGION NO.	DIVISION	PROJ. NO.	SHEET NO.	TOTAL SHEETS
VIII	COLORADO	I25-2(154)	25	79

REVISIONS		

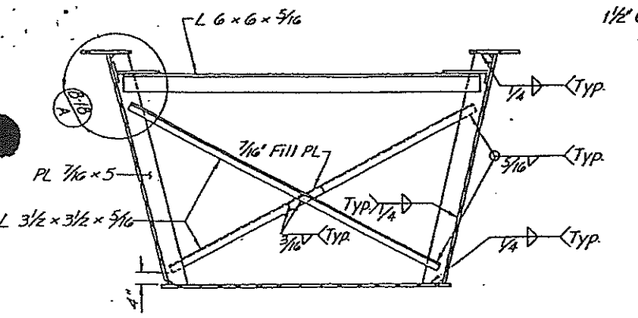

TYPE D1

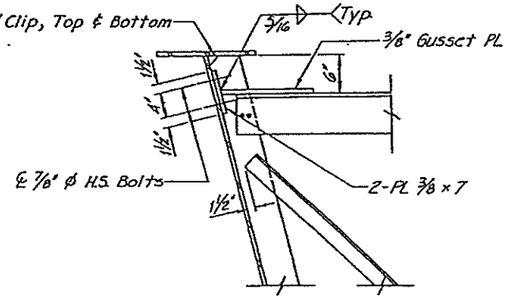

SECTION B-18 A

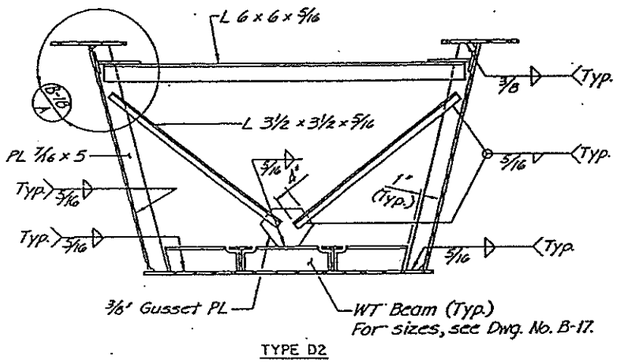

TYPE D2

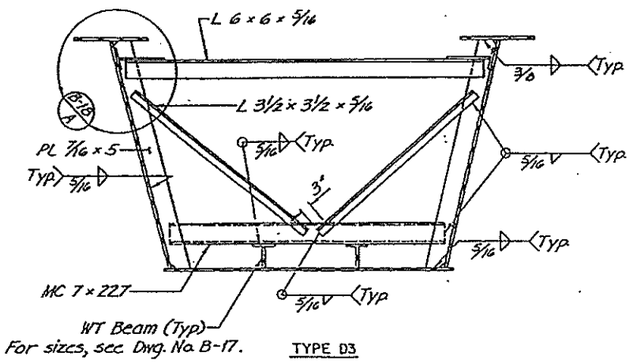

TYPE D3

INTERMEDIATE DIAPHRAGMS

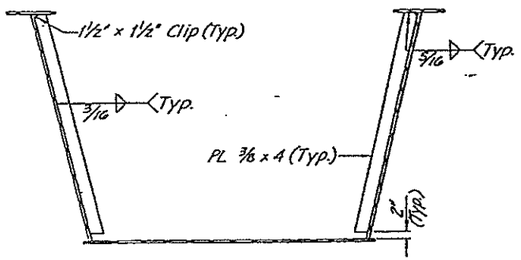

TYPE S1

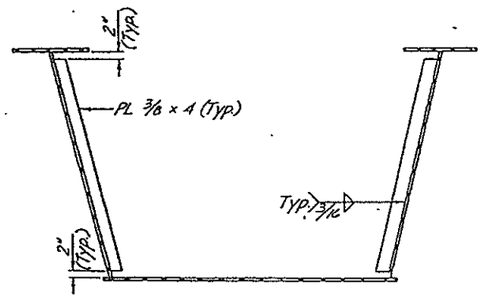

TYPE S2

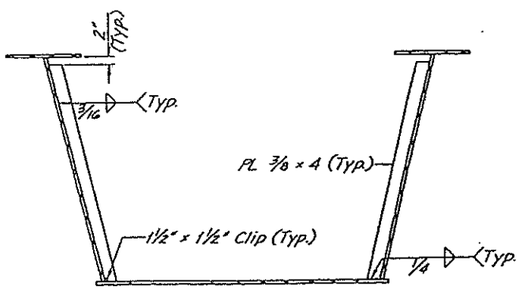

TYPE S3

TRANSVERSE STIFFENERS

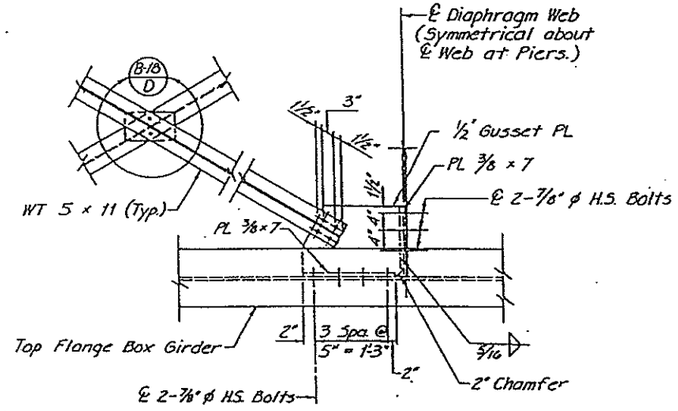

DETAIL B-12 B, B-13 B, B-14 B

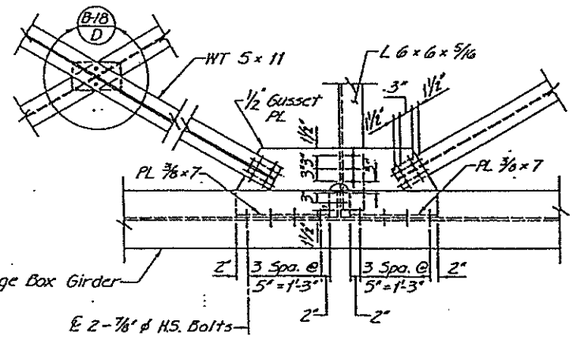

DETAIL B-12 C, B-13 C, B-14 C

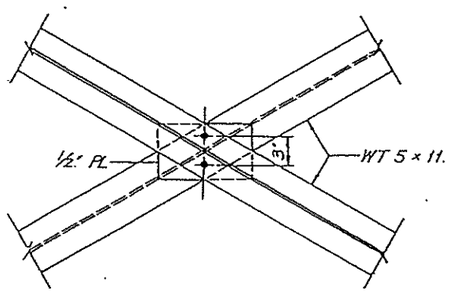

DETAIL B-18 D

LATERAL BRACING

CHECKED BY D.M.J. 3-24
DETAILED BY C.E.M. 1-86
QUANTITIES BY D.M.J. 3-24
LECKO BY R.A.H. 3-24

HOWARD/NEEDLES/TAMMEN & BERGENDOFF HNTB

DIVISION OF HIGHWAYS

INTERMEDIATE DIAPHRAGMS, TRANSVERSE STIFFENERS, AND LATERAL BRACING DETAILS

(RAMP B)

Designer	R. Hedrick	Structure Numbers	F-17-IT
Detailer	C. Meyers		
Drawing Number	B-18	of 32	Drawings

Revision Dates (Preliminary Stage Only)

AS CONSTRUCTED			
NO REVISIONS 11-6-86	REVISED		VOID

FEDERAL ROAD REGION NO.	DIVISION	PROJ. NO.	SHEET NO.	TOTAL SHEETS
VIII	COLORADO	I25-2(154)	26	79

REVISIONS

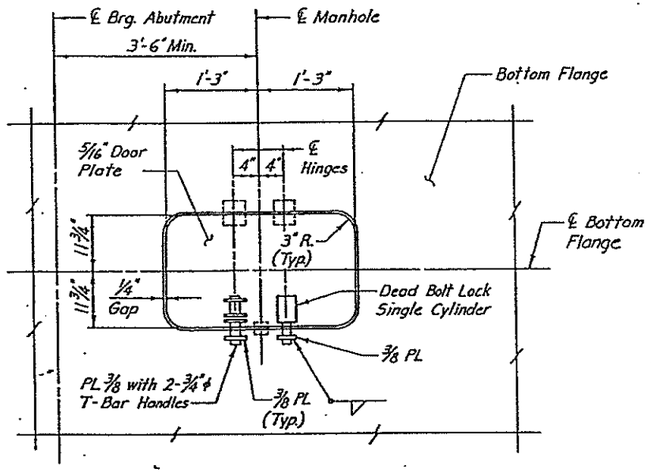

PLAN OF ACCESS MANHOLE IN BOTTOM FLANGE

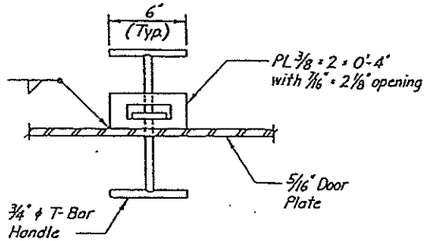

SECTION B-19/A

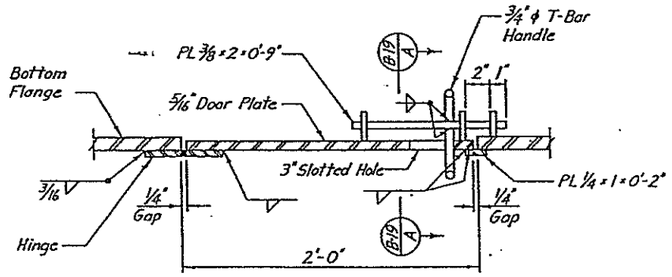

HINGE AND BOLT DETAIL

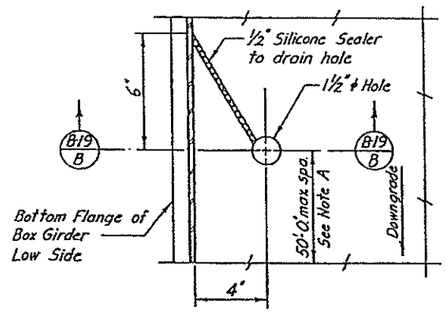

GIRDER DRAIN HOLE DETAILS

Note A:
In addition, ~~provide~~ provided drain holes at low points of box girder.

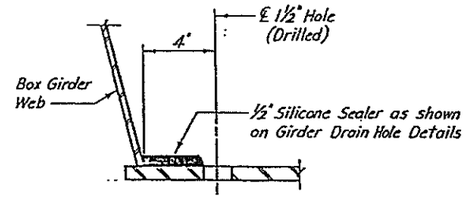

SECTION B-19/B

Note: ~~Clean~~ cleaned steel before applying silicone sealer compound. Compound was subject to approval of engineer.
Silicone Sealer ~~will~~ was not ~~be~~ paid for separately but ~~shall be~~ was included in the cost of the work.

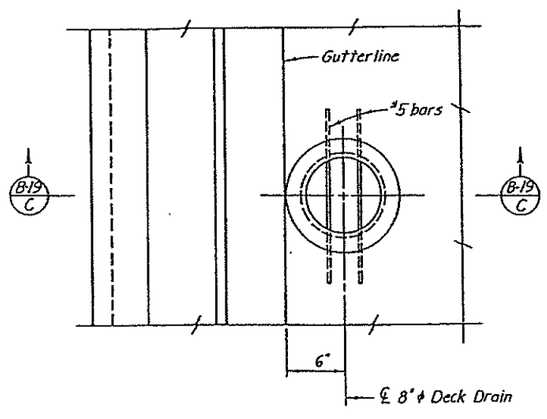

PLAN

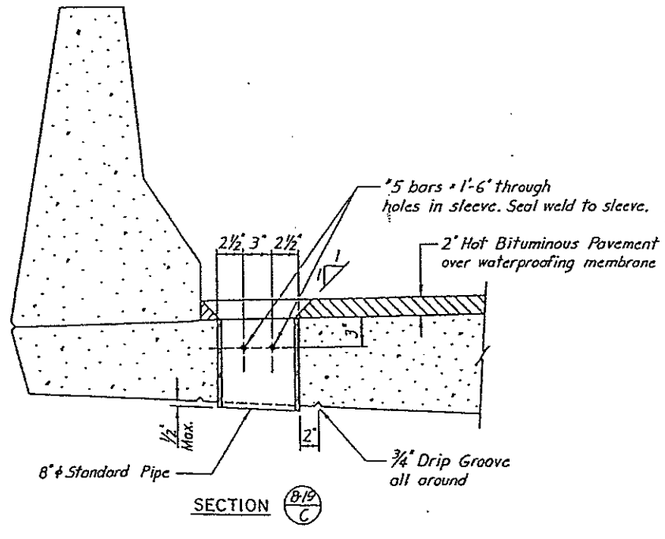

SECTION B-19/C

Notes:
1. Deck drain assembly ~~shall be~~ was galvanized after fabrication.
2. Move or bend reinforcing steel to clear.
3. For deck drain locations see Dwg. No. B-5 thru B-7

DECK DRAIN DETAILS

HOWARD NEEDLES TAMMEN & BERGENDOFF HNTB

DIVISION OF HIGHWAYS

ACCESS MANHOLE, GIRDER DRAIN, AND DECK DRAIN DETAILS

(RAMP B)

Designer D. Jones	Structure Numbers	F-17-IT	
Detailer R. Gordon			
Drawing Number B-19	of	32	Drawings

Revision Dates (Preliminary Stage Only)

CHECKED BY	R.A.H.	10-83	QUANTITIES BY	B.W.H.	3-84
DETAILED BY	R.D.G.	10	CHECKED BY	T.N.S.	3-84

AS CONSTRUCTED			
NO REVISIONS		REVISED 11-6-96	VOID

FEDERAL ROAD REGION NO.	DIVISION	PROJ. NO.	SHEET NO.	TOTAL SHEETS
VIII	COLORADO	I25-2(154)	27	79

REVISIONS			
R-1	10-17-84	Changed Note	L.E.G.

Note: All concrete for Pour ① ~~shall be~~ was placed in place 24 hrs. before starting Pour ② if placed separately.

Welding of the stay-in-place deck forms to the top flange of the box girders ~~shall~~ not be permitted.

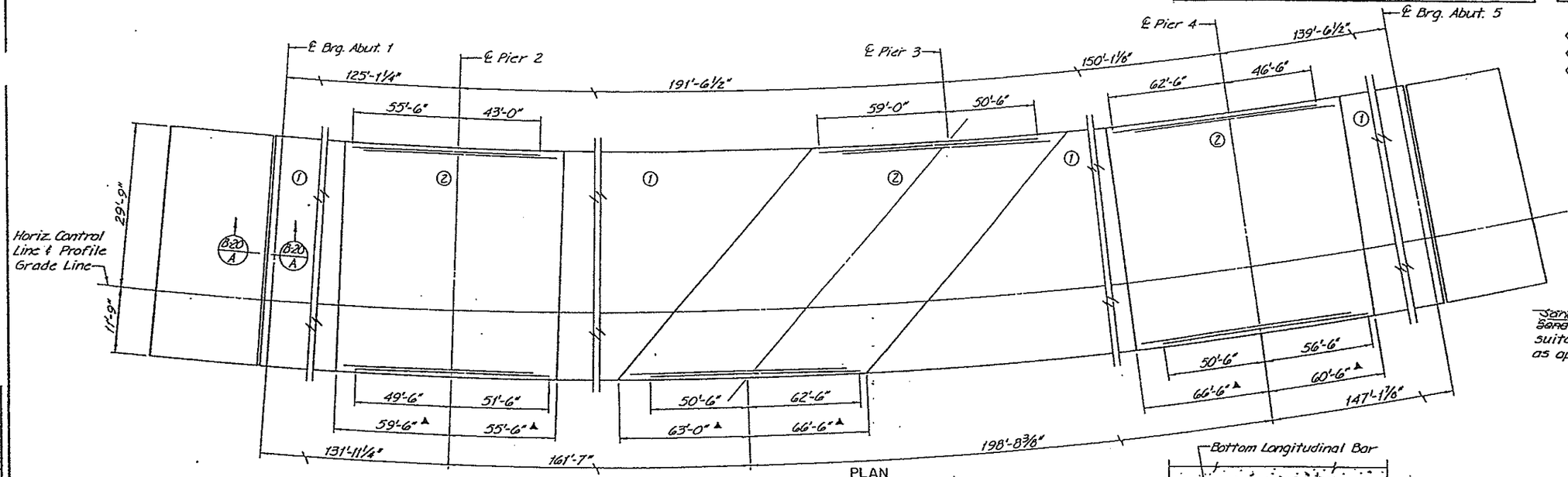

PLAN

▲ Dimensions along Horizontal Control Line.

① Denotes pouring sequence.

~~Sandblast~~ Sandblast prior to applying epoxy bonding agent suitable for bonding wet concrete as approved by the Engineer.

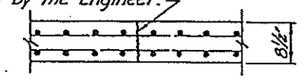

OPTIONAL CONSTRUCTION JOINT DETAIL

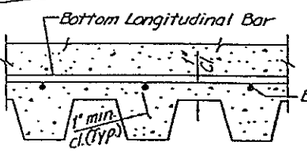

STAY IN PLACE DECK FORM DETAIL

(R-1) Note: Deck ~~shall be~~ may be formed using permanent bridge deck forms between the girders and ~~are~~ not to be used to form the overhangs. See Special Provisions

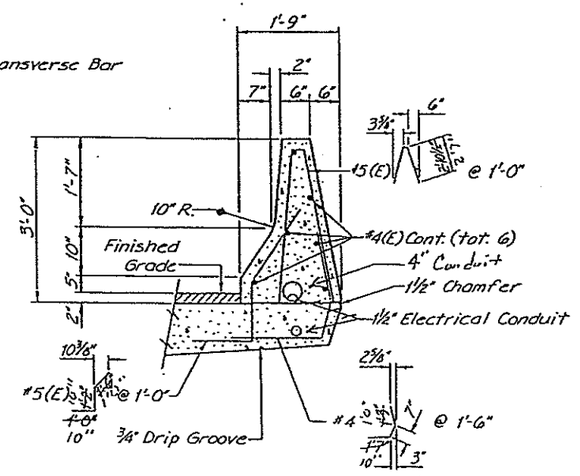

SECTION THRU BARRIER

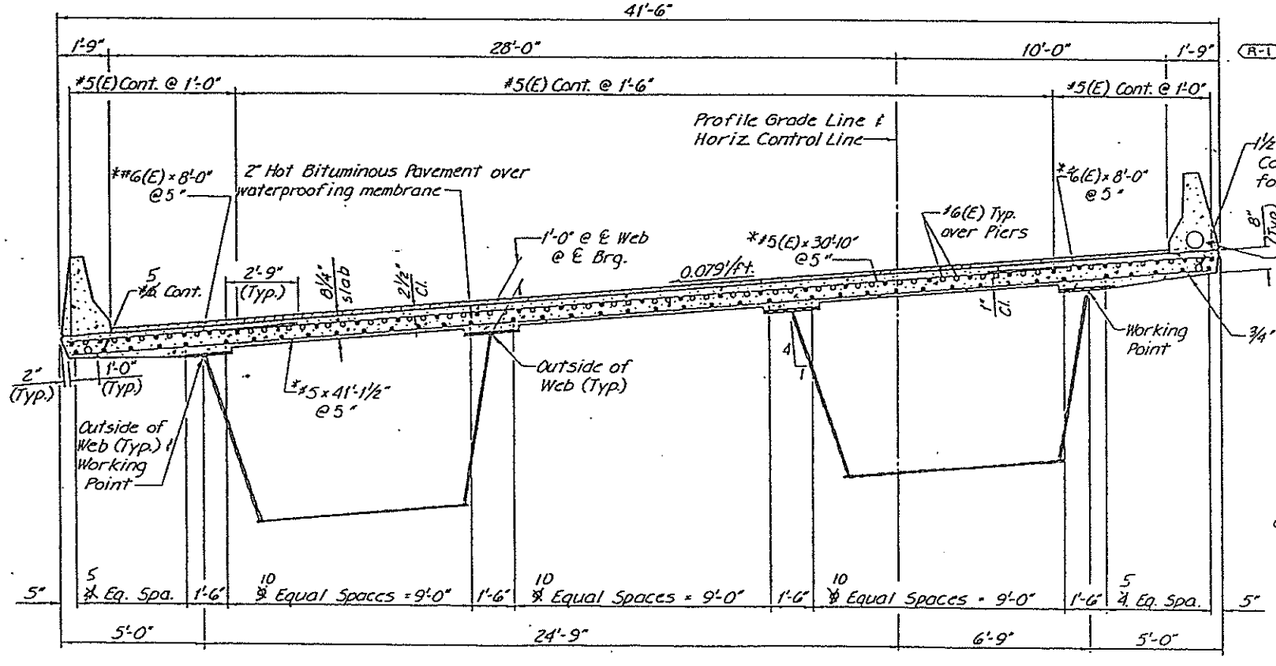

TYPICAL SECTION

*Place radially.

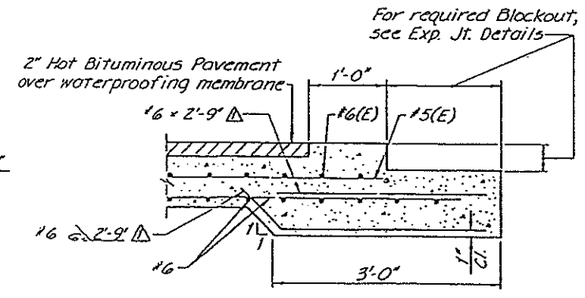

SECTION (B-20 A)

⚠ Match Bottom Longitudinal Reinforcing Steel.

(E) - Epoxy Coated Bars

HINTES

DIVISION OF HIGHWAYS

SUPERSTRUCTURE DETAILS

(RAMP B)

Designer	J. Vaughn	Structure Numbers	F-17-IT
Detailer	C. Meyers		
Drawing Number	B-20	of 32	Drawings

QUANTITIES BY	B.W.H.	3-84
CHECKED BY	R.A.H.	3-84
DESIGNED BY	D.W.H.	3-84
DETAILED BY	C.E.M.	3-84
CHECKED BY		
DETAILED BY		

AS CONSTRUCTED			
NO REVISIONS	11-6-56	REVISED	VOID

FEDERAL ROAD REGION NO.	DIVISION	PROJ. NO.	SHEET NO.	TOTAL SHEETS
VIII	COLORADO	I25-2(154)	28	79

REVISIONS		

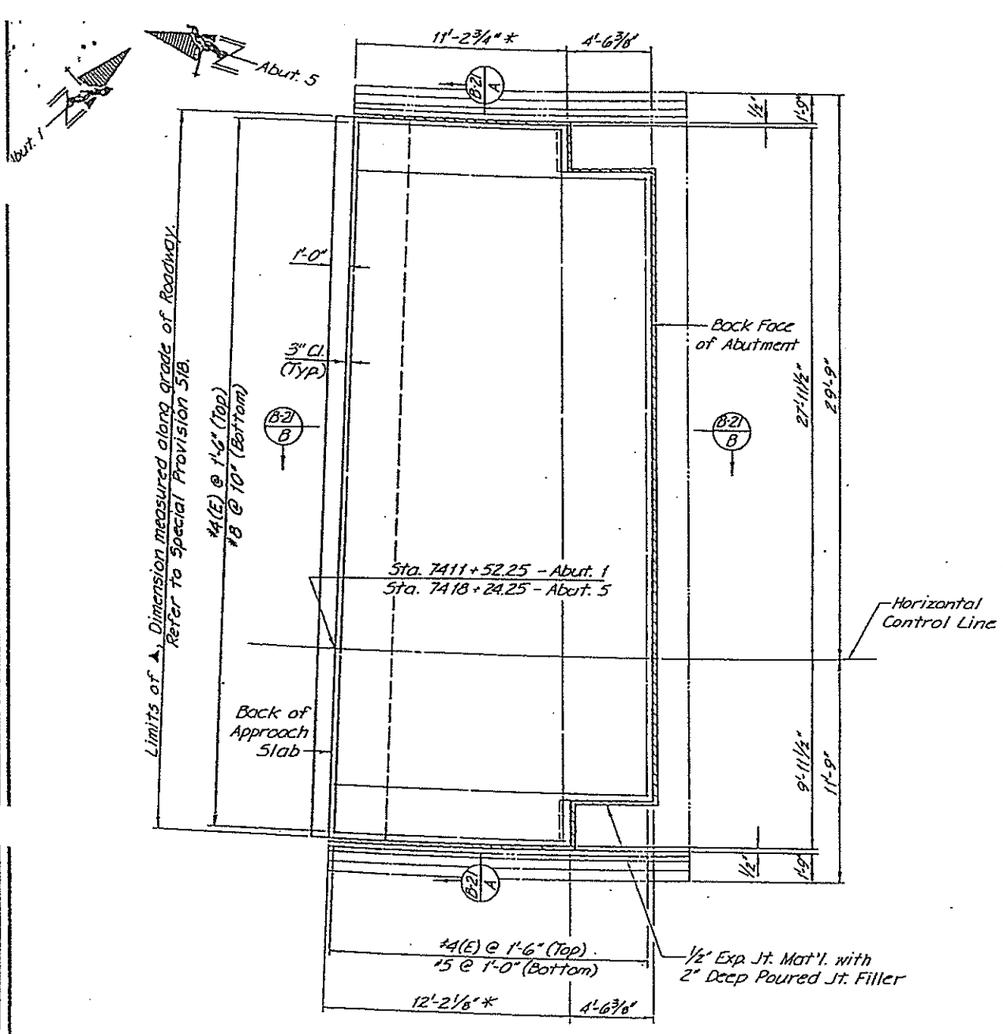

APPROACH SLAB PLAN

Note: Abutment 1 Approach Slab is shown; Abutment 5 Approach Slab is opposite-hand.
*Dimensions are along inside of concrete barrier.

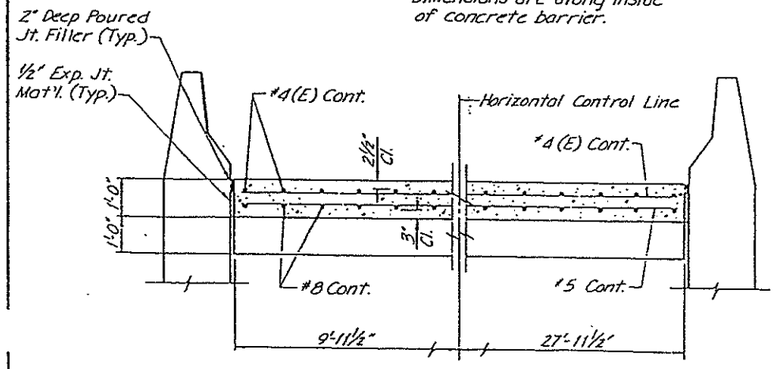

SECTION B-21 A

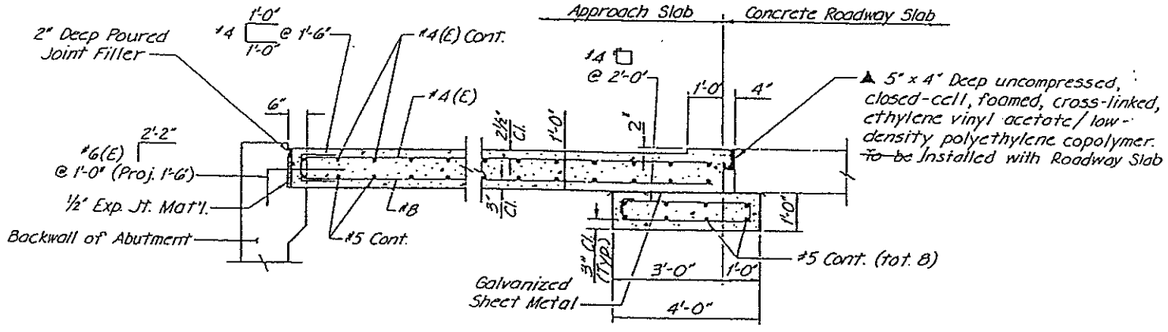

SECTION B-21 B

NOTE:

DIVISION OF HIGHWAYS

APPROACH SLAB DETAILS

(RAMP B)

Designer	D. Jones	Structure Numbers	F-17-IT
Detailer	C. Meyers		
Drawing Number B-21		of 32	Drawings

CHECKED BY	T.N.S.	3-56
DETAILED BY	C.E.M.	1-56

AS CONSTRUCTED			
NO REVISIONS		REVISED 11-6-86	VOID

FEDERAL ROAD REGION NO.	DIVISION	PROJ NO.	SHEET NO.	TOTAL SHEETS
VIII	COLORADO	125-2(154)	44	77

REVISIONS		

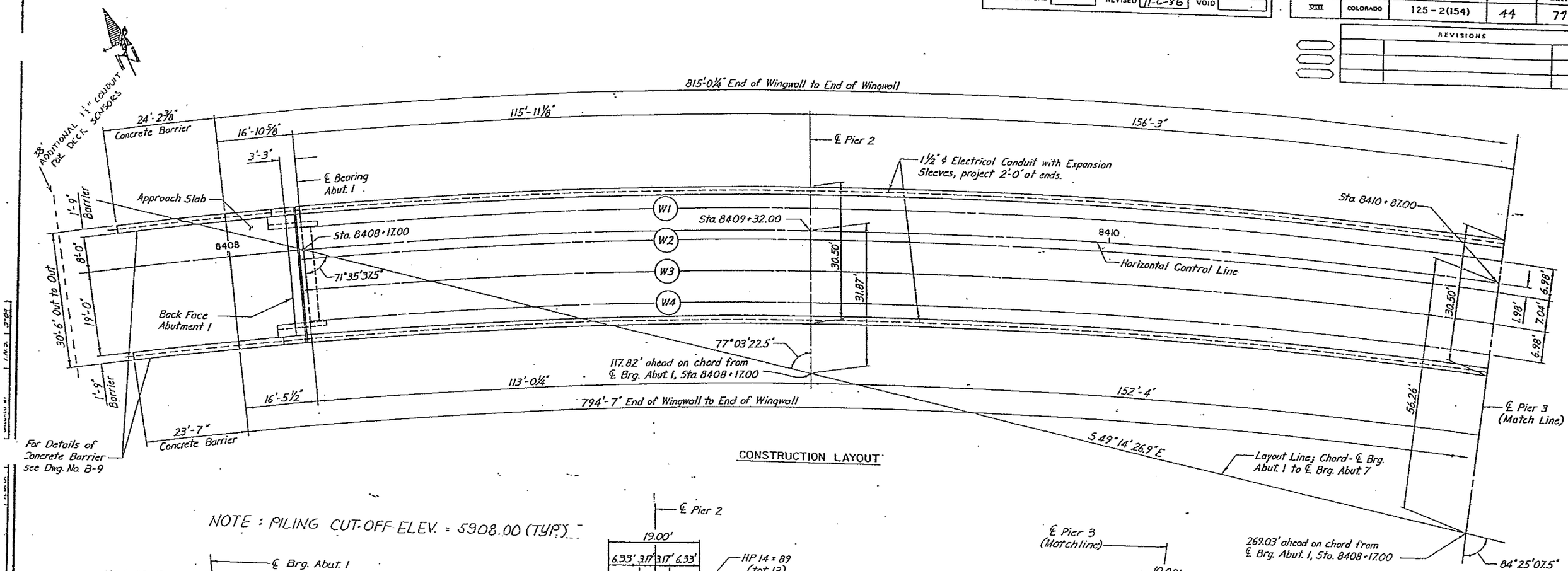

CONSTRUCTION LAYOUT

NOTE : PILING CUT-OFF ELEV. = 5908.00 (TYP.)

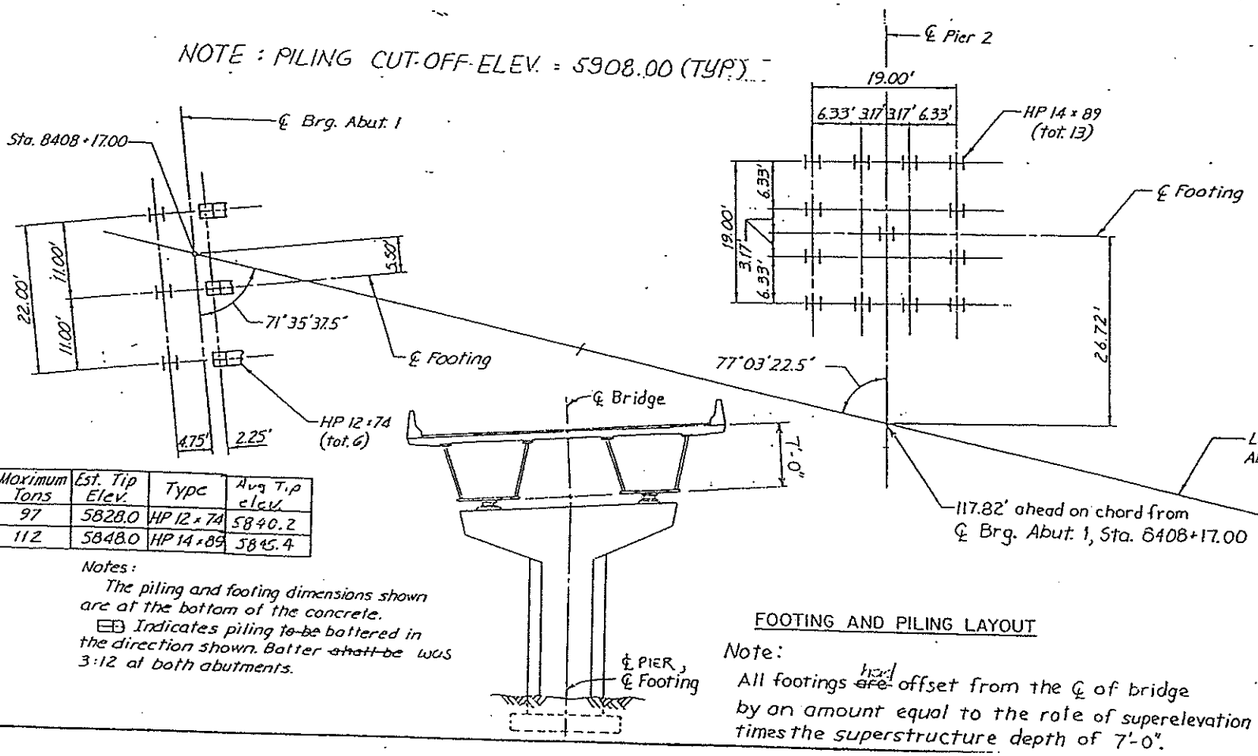

Location	Maximum Tons	Est. Tip Elev.	Type	Avg Tip elev.
Abut. 1	97	5828.0	HP 12×74	5840.2
Pier 2	112	5848.0	HP 14×89	5845.4

Notes:

The piling and footing dimensions shown are at the bottom of the concrete.

⊟ Indicates piling ~~to be~~ battered in the direction shown. Batter ~~shall be~~ was 3:12 at both abutments.

FOOTING AND PILING LAYOUT

Note:

All footings ~~are~~ had offset from the ℄ of bridge by an amount equal to the rate of superelevation times the superstructure depth of 7'-0".

Location	Maximum Actual, Tons	Maximum Allow., Tons	Min. Tip Elevation
Pier 3	570	650	5838.5

Note: Loads shown above are Service Loads.

HNTB

DIVISION OF HIGHWAYS

CONSTRUCTION LAYOUT

AND

FOOTING AND PILING LA

(RAMP C)

Designer D. Jones	Structure Numbers
Detailer R. Gordon	

AS CONSTRUCTED			
NO REVISIONS 11-6-86	REVISED		VOID

FEDERAL ROAD REGION NO.	DIVISION	PROJ. NO.	SHEET NO.	TOTAL SHEETS
VIII	COLORADO	125-2(154)	45	79

REVISIONS

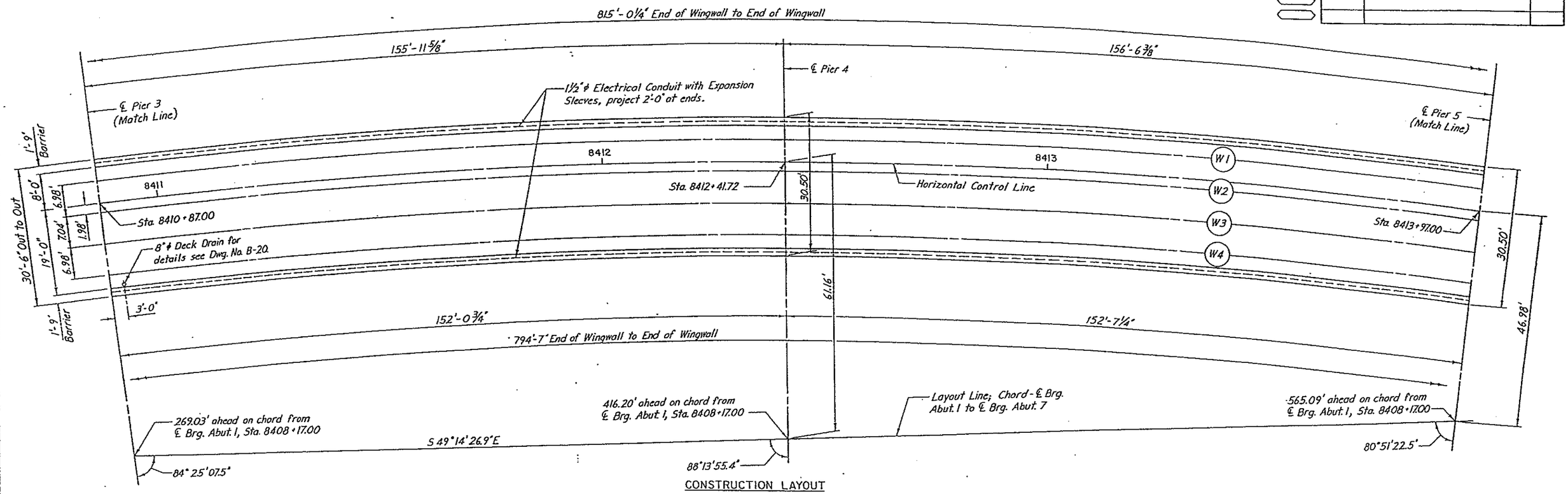

CONSTRUCTION LAYOUT

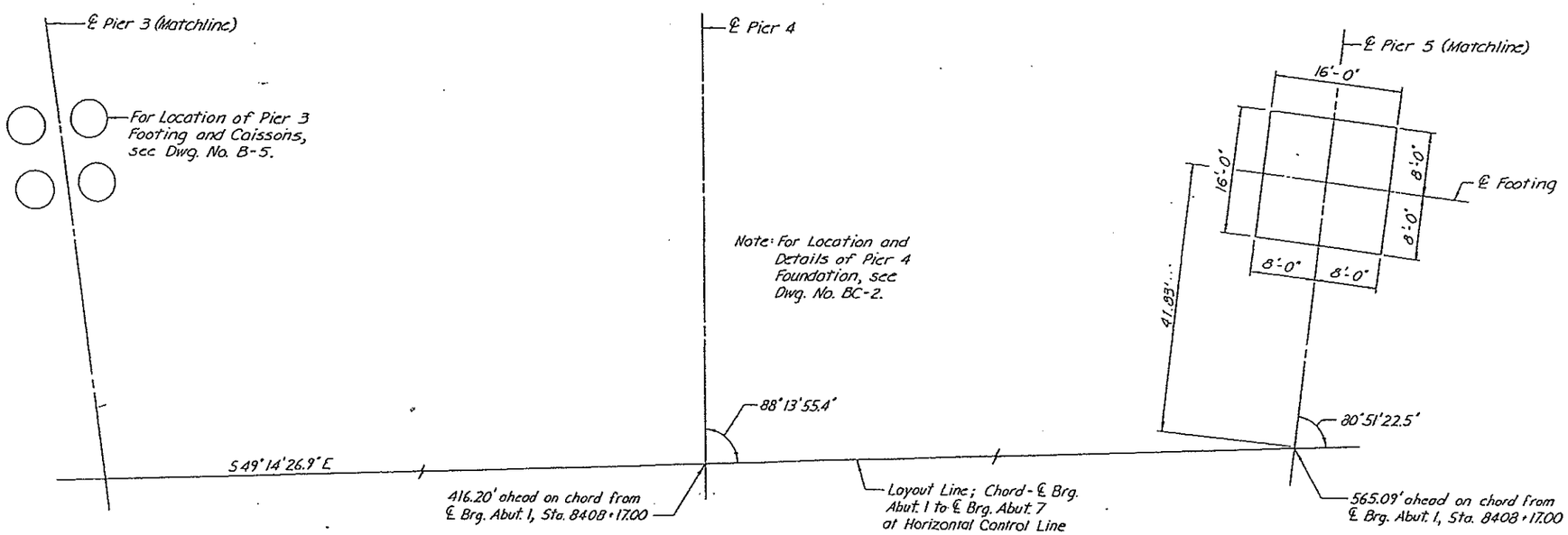

FOOTING AND PILING LAYOUT

Note: The footing dimensions shown are at the bottom of the concrete. Maximum Pier 5 Footing Pressure is 3.0 Tons/Sq. Ft.

HOWARD NEEDLES TAMMEN & BERGENDOFF HNTB

DIVISION OF HIGHWAYS

CONSTRUCTION LAYOUT
AND
FOOTING AND PILING LAYOUT
(RAMP C)

Designer	D. Jones	Structure Numbers	F-17-IQ
Detailer	R. Gordon		

QUANTITIES BY	J.M.V.	3-84
CHECKED BY	T.N.S.	3-84
CHECKED BY	T.N.S.	9-
DETAILED BY	R.O.G.	9

AS CONSTRUCTED			
NO REVISIONS		REVISED 11-6-86	VOID

FEDERAL ROAD REGION NO.	DIVISION	PROJ. NO.	SHEET NO.	TOTAL SHEETS
VIII	COLORADO	125-2(154)	46	79

REVISIONS

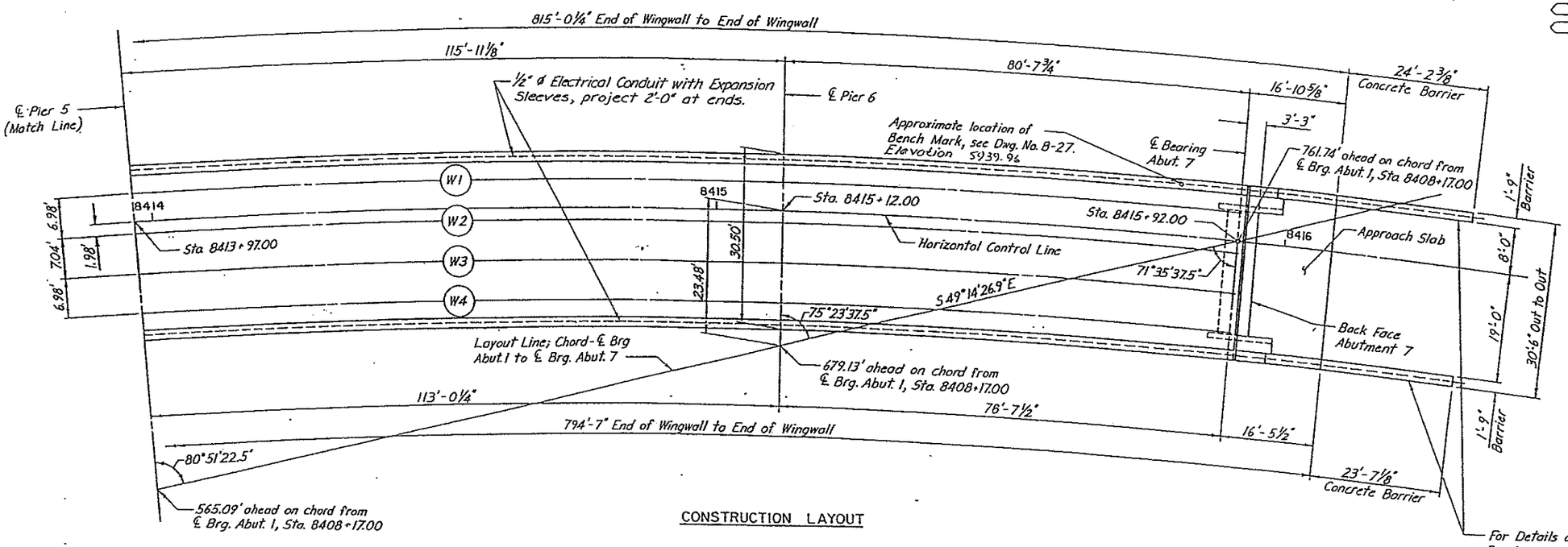

CONSTRUCTION LAYOUT

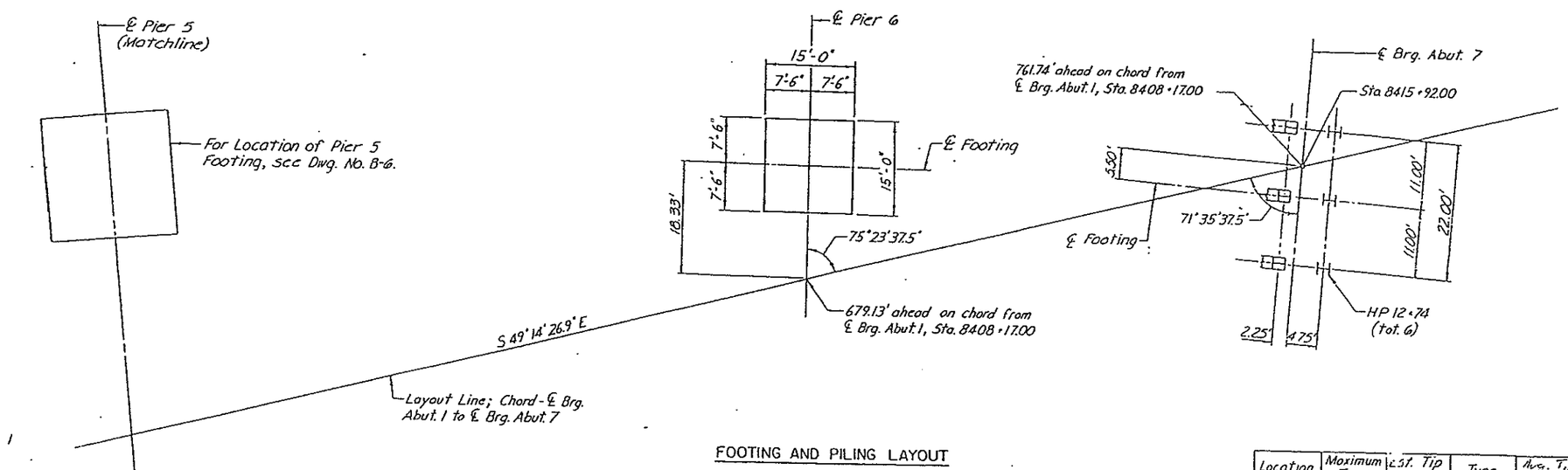

FOOTING AND PILING LAYOUT

Location	Maximum Tons	Est. Tip Elev.	Type	Avg. Tip elev.
Abut. 7	97.2	5875.0	HP 12×74	5879

Notes:
The piling and footing dimensions shown are at the bottom of the concrete.
Indicates piling ~~to be~~ battered in the direction shown. Batter ~~shall be~~ plus 3:12 at both abutments.
Maximum Pier 6 Footing Pressure is 8.1 Tons/Sq. Ft.

HOWARD NEUBECK TAMMEN & BERGENDOFF HNTB

DIVISION OF HIGHWAYS

CONSTRUCTION LAYOUT
AND
FOOTING AND PILING LAYOUT
(RAMP C)

Designer D. Jones | Structure F-17-IQ

DETAILED BY R.D.G. 9-8 | CHECKED BY T.N.S. 3-84

AS CONSTRUCTED			
NO REVISIONS	11-6-96	REVISED	VOID

FEDERAL ROAD REGION NO.	DIVISION	PROJ. NO.	SHEET NO.	TOTAL SHEETS
VIII	COLORADO	125-2(154)	47	79

REVISIONS		

CHECKED BY	DETAILED BY	QUANTITIES BY	CHECKED BY
10-10	D.H.J.	J.M.V.	T.M.S.
6-10	R.D.G.	3-94	5-94

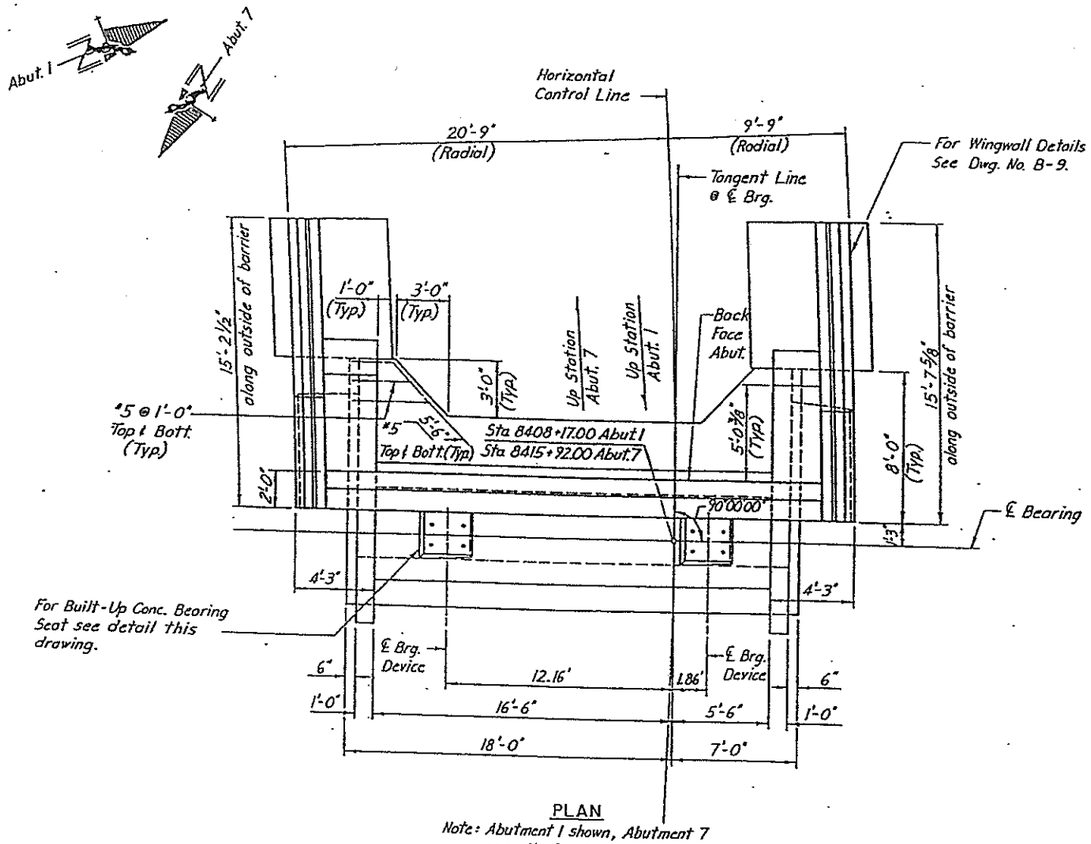

PLAN

Note: Abutment 1 shown, Abutment 7 opposite hand.

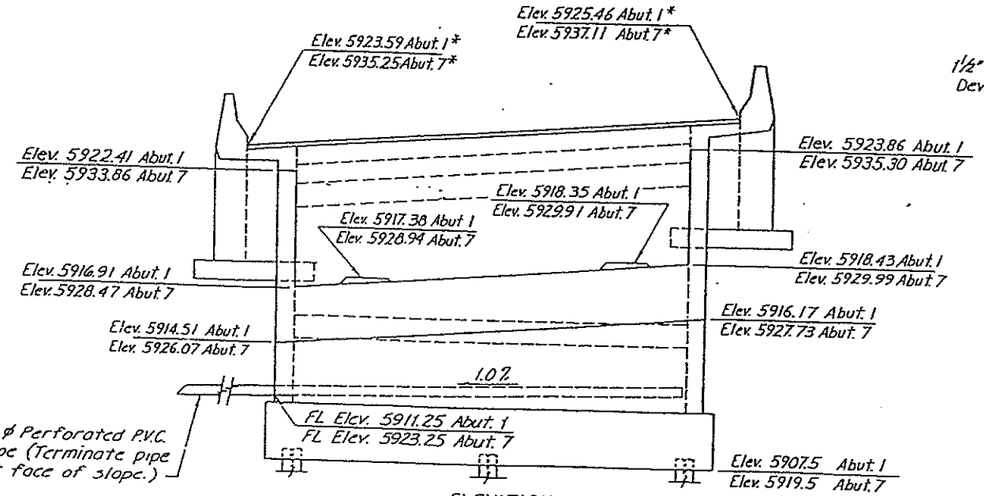

ELEVATION

* Elevations are at Back Face of Abutment, Finished Grade.

Note: Abutment 1 shown, Abutment 7 opposite hand.

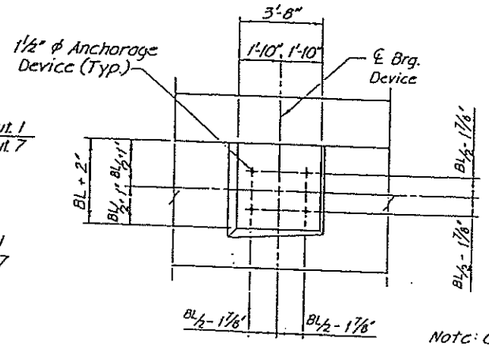

PLAN

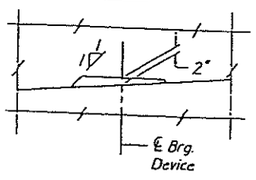

ELEVATION

BUILT-UP CONCRETE BEARING SEAT

Note: Concrete for Bearing Seat shall be monolithic with pier cap.

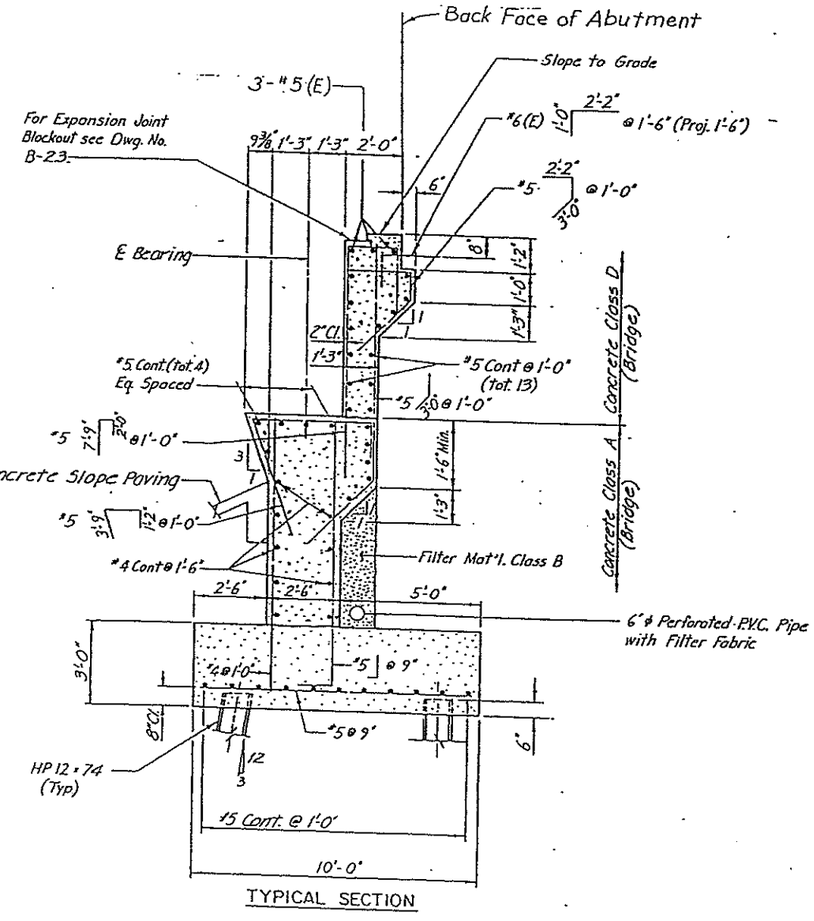

TYPICAL SECTION

(E) - Denotes epoxy coated bars.

NOTES

DIVISION OF HIGHWAYS

ABUTMENT 1 & 7 DETAILS

(RAMP C)

Designer J. Vaughn | Structure F-17-10

AS CONSTRUCTED			
NO REVISIONS	11-4-76	REVISED	VOID

FEDERAL ROAD REGION NO.	DIVISION	PROJ. NO.	SHEET NO.	TOTAL SHEETS
VIII	COLORADO	125 - 2(154)	48	79

REVISIONS		

QUANTITIES BY	J.M.V.	3-69
CHECKED BY	T.M.S.	3-69
CHECKED BY	J.M.V.	11-69
DETAILED BY	R.O.G.	1"

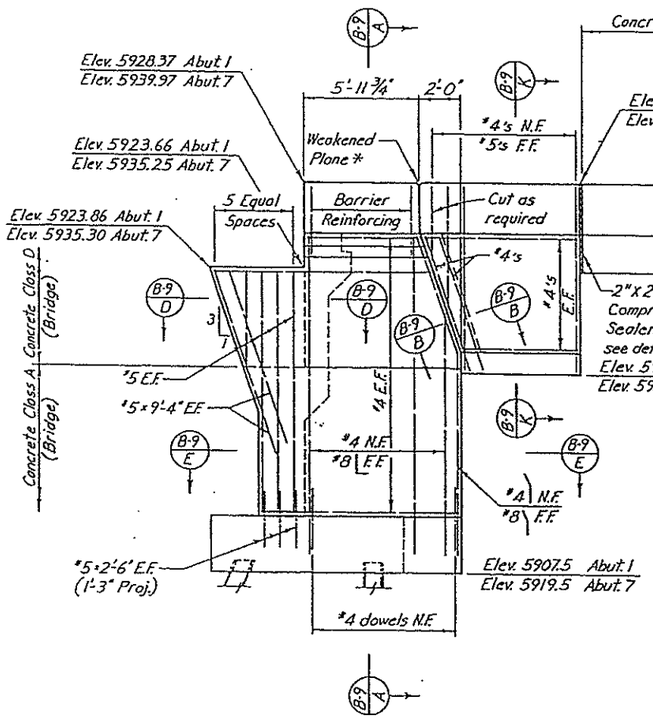

ELEVATION LEFT WINGWALLS

Note: Elevation for Abut. 1 wingwall shown, Abut. 7 wingwall opposite hand.
* Along perimeter of barrier only.

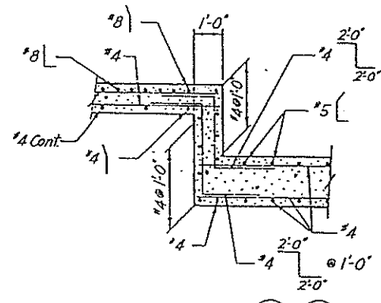

SECTION B-9 B / B-9 G

Note: Section B shown, Section G is opposite hand.

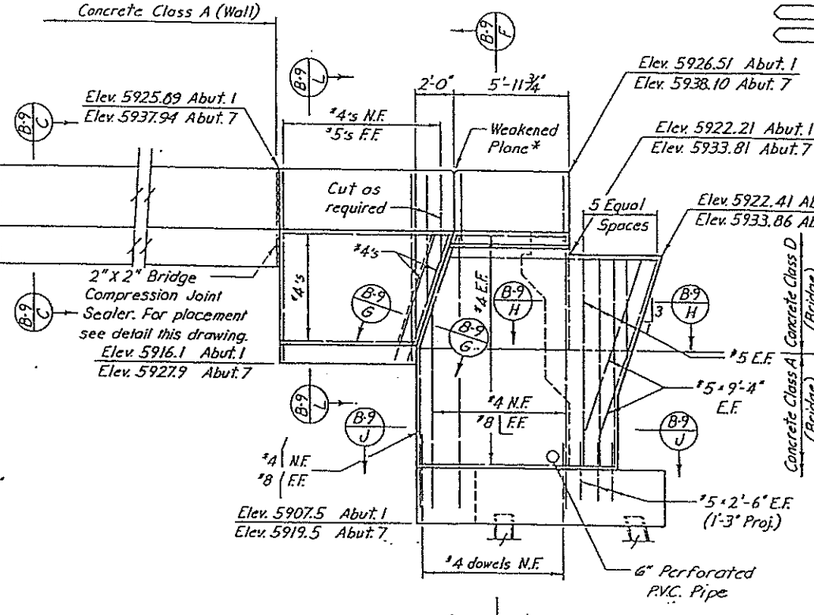

ELEVATION RIGHT WINGWALLS

Note: Elevation for Abut. 1 wingwall shown, Abut. 7 wingwall opposite hand.
* Along perimeter of barrier only.

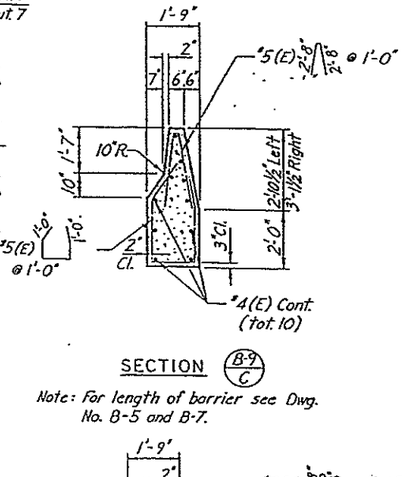

SECTION B-9 C

Note: For length of barrier see Dwg. No. B-5 and B-7.

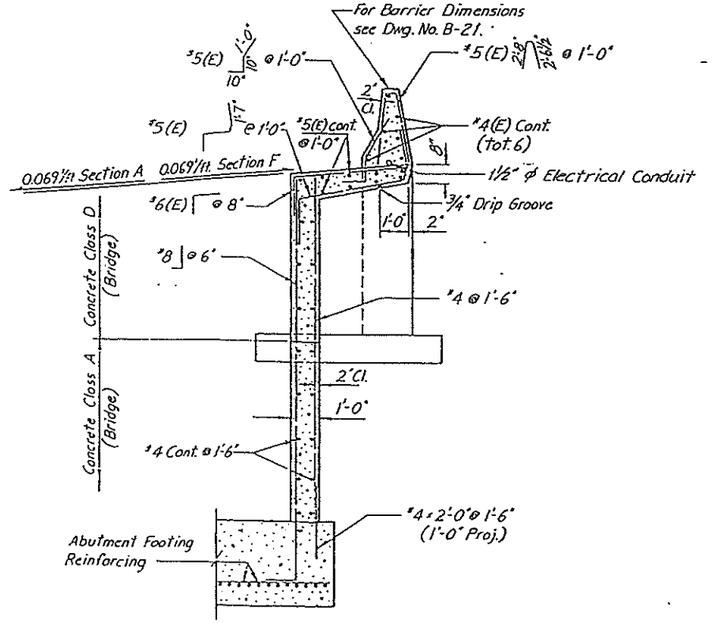

SECTION B-9 A / B-9 F

Note: Section A shown, Section F opposite hand and similar except as noted.

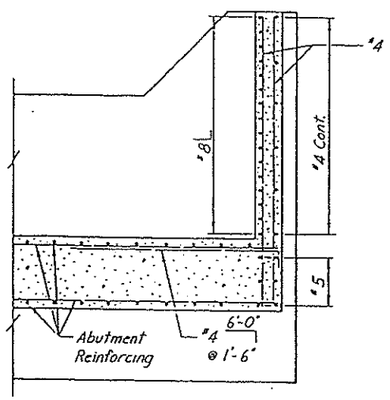

SECTION B-9 E / B-9 J

Note: Section E shown, Section J opposite hand.

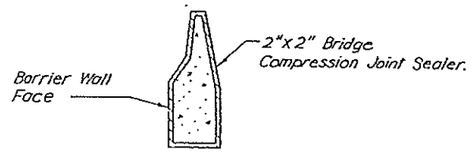

BRIDGE COMPRESSION JOINT SEALER PLACEMENT

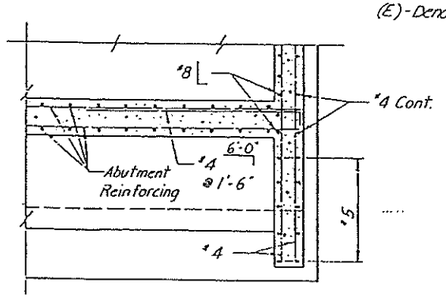

SECTION B-9 D / B-9 H

Note: Section D shown, Section H opposite hand.

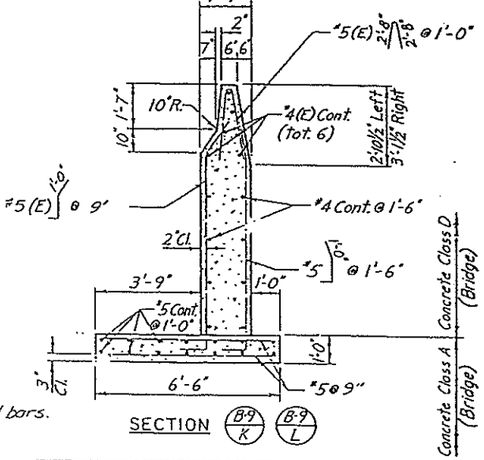

(E)-Denotes epoxy coated bars.

SECTION B-9 K / B-9 L

HINTS

DIVISION OF HIGHWAYS

WINGWALL DETAILS

(RAMP C)

Designer	T. Stauffer	Structure Numbers	F-17-10
Detailer	R. Gordon		

AS CONSTRUCTED				
NO REVISIONS 11-6-86	REVISED		VOID	

FEDERAL ROAD REGION NO.	DIVISION	PROJ. NO.	SHEET NO.	TOTAL SHEETS
VIII	COLORADO	I25-2(154)	49	79

REVISIONS

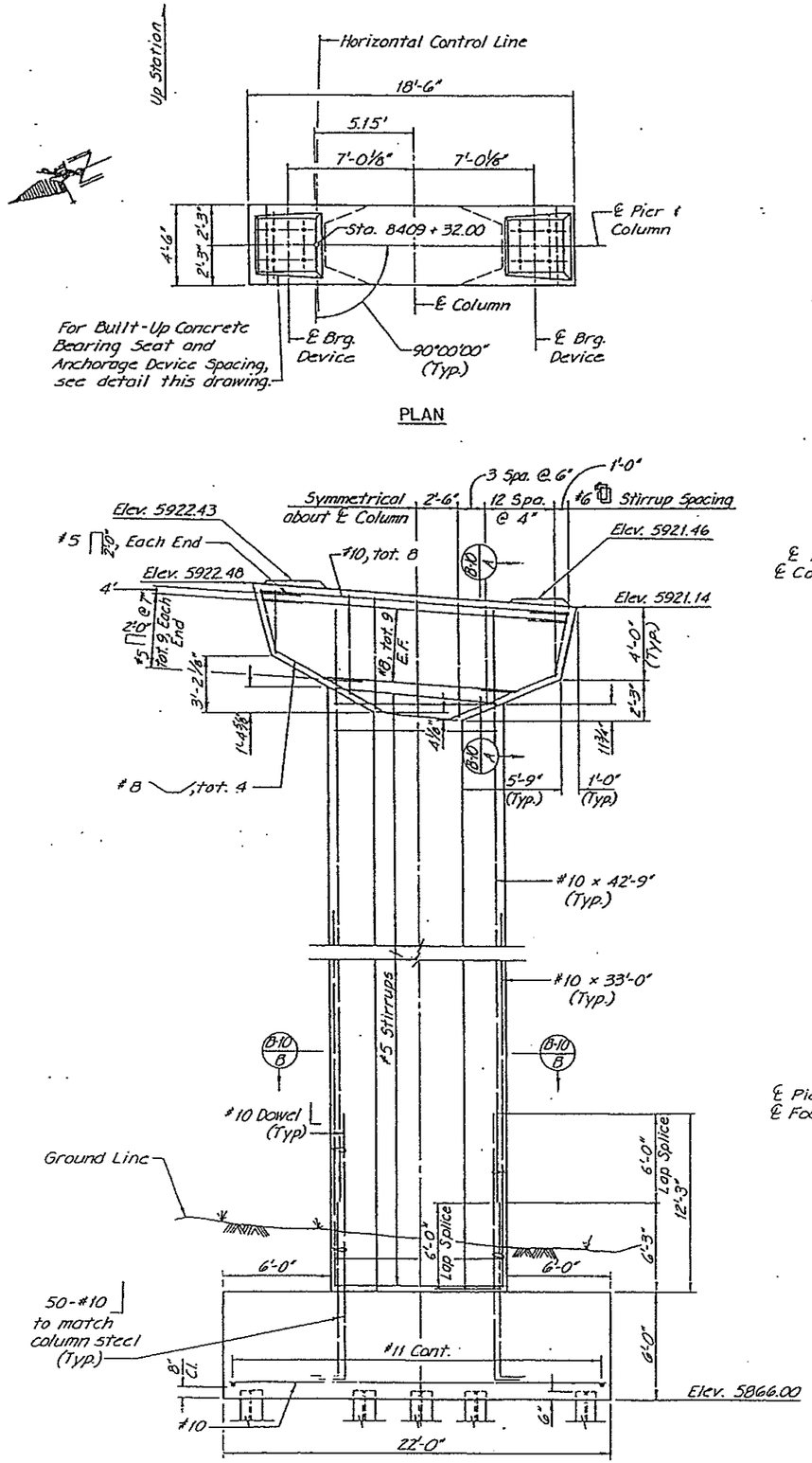

PLAN

ELEVATION

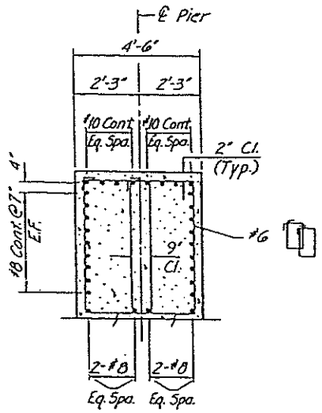

SECTION B-10 A

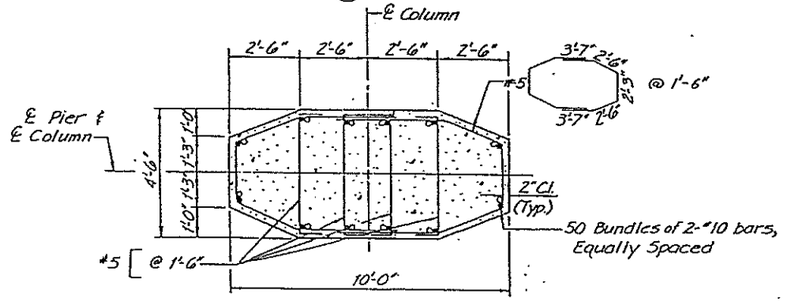

SECTION B-10 B

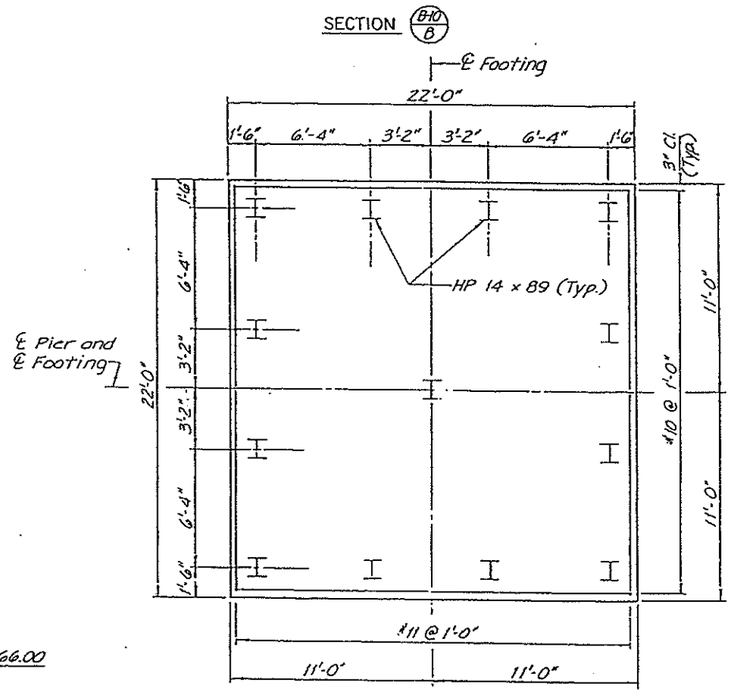

FOOTING PLAN

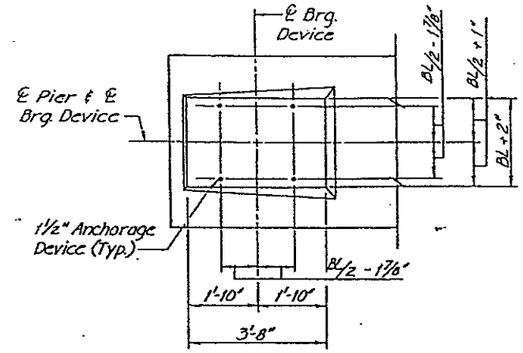

PLAN

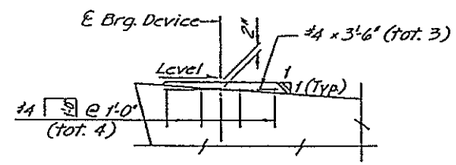

ELEVATION

BUILT-UP CONCRETE BEARING SEAT

Note: For Dimension BL, see Dwg. No. B-25. Concrete for Bearing Seat ~~shall~~ was ~~be~~ monolithic with pier cap.

CHECKED BY	D.M.J.	12-8-84	QUANTITIES BY	J.M.V.	3-84
DETAILED BY	C.E.M.	12	CHECKED BY	T.N.S.	3-84

HOWARD NEEDLES TAMMEN & BERGENDOFF HNTB

DIVISION OF HIGHWAYS

PIER 2 DETAILS

(RAMP C)

Designer B. Haynes	Structure Numbers	F-17-IQ
Detailer C. Meyers		

AS CONSTRUCTED			
NO REVISIONS		REVISED 11-6-86	VOID

FEDERAL ROAD REGION NO.	DIVISION	PROJ. NO.	SHEET NO.	TOTAL SHEETS
VIII	COLORADO	I25-2(154)	50	79

REVISIONS			

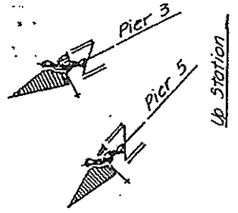

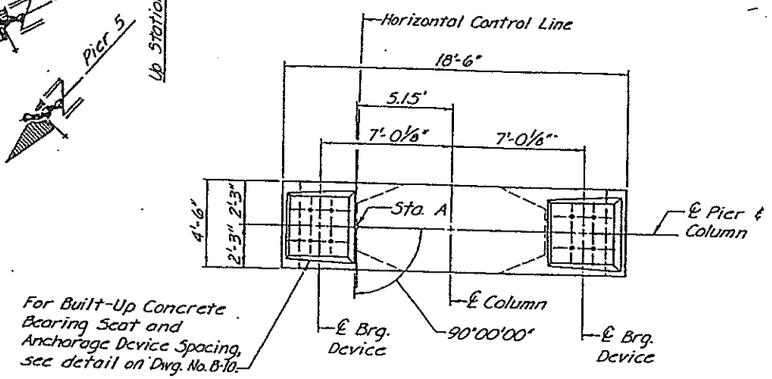

PLAN

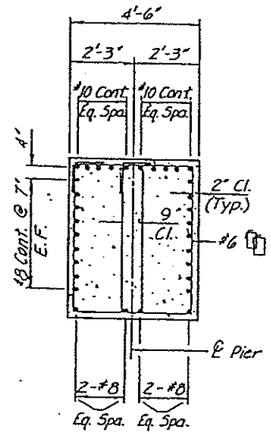

SECTION (B-11/A)

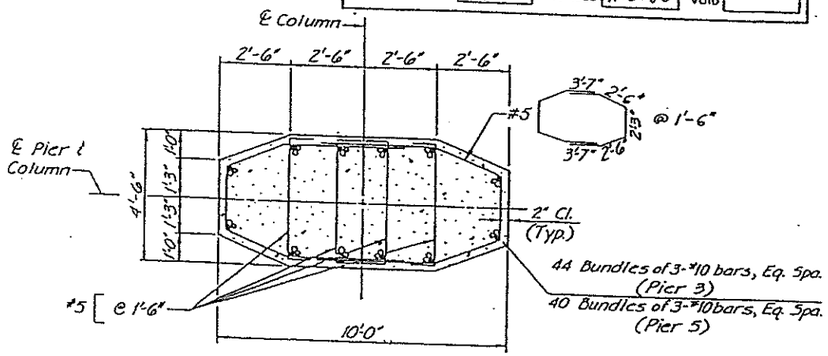

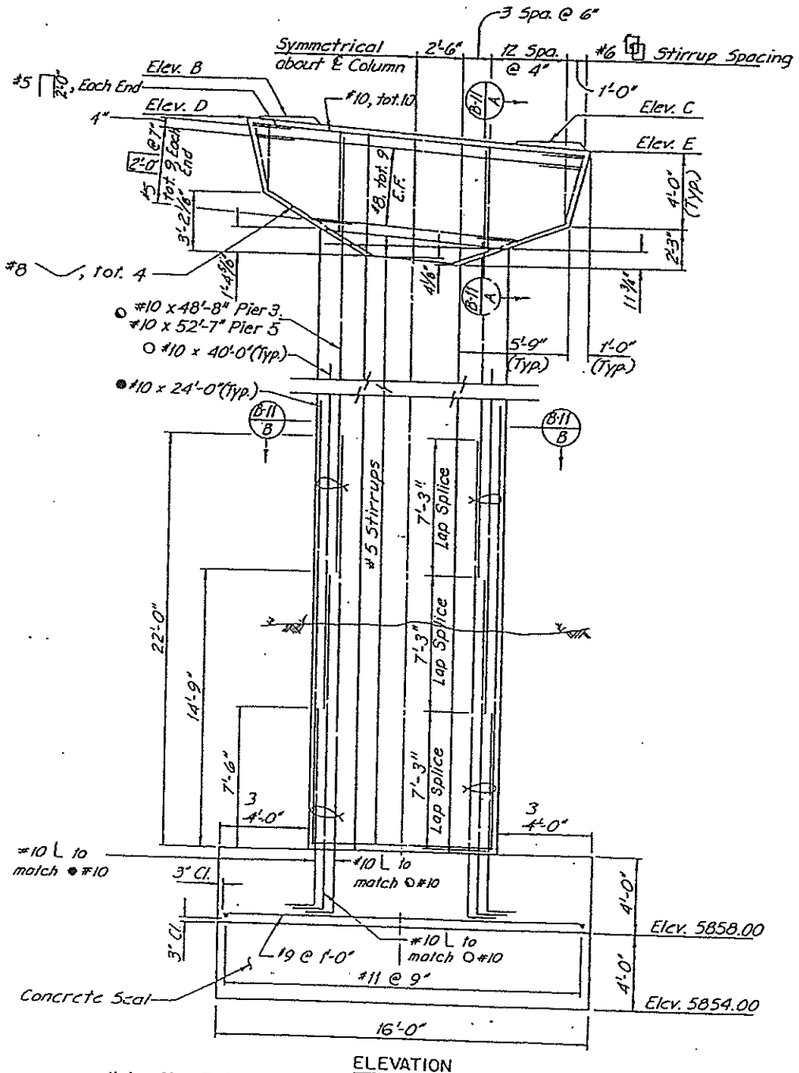

ELEVATION

Note: Pier 5 footing is shown. For Pier 3 footing, see detail this drawing.

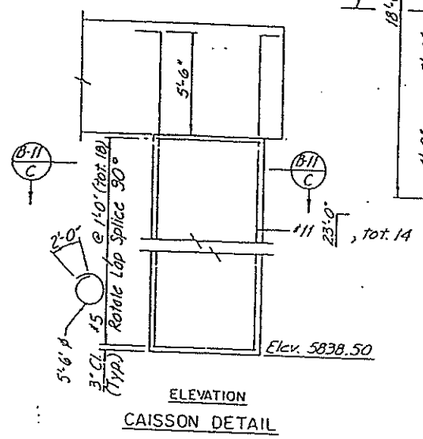

ELEVATION

CAISSON DETAIL

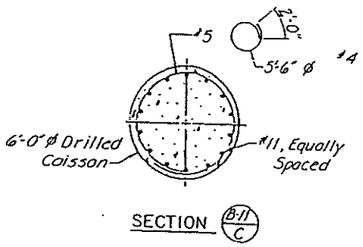

SECTION (B-11/C)

SECTION (B-11/B)

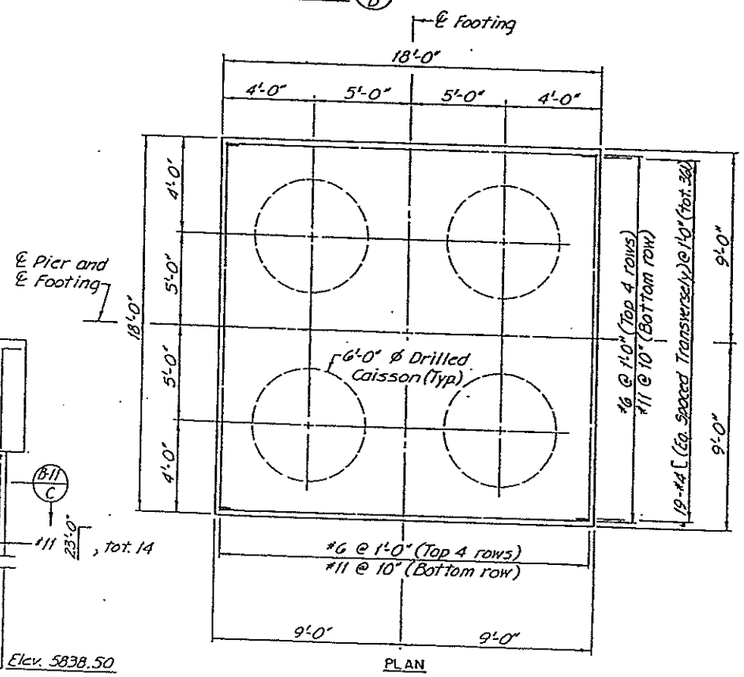

PLAN

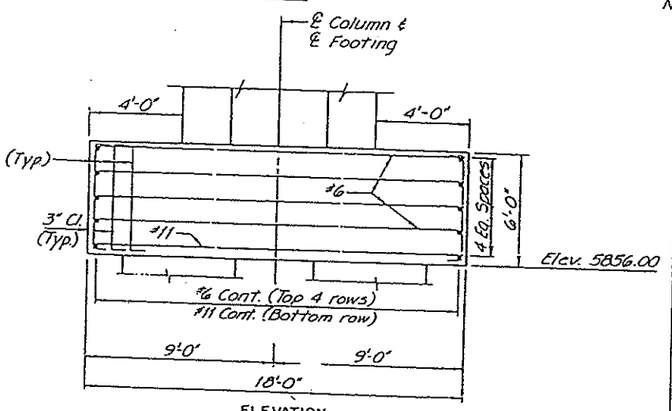

ELEVATION

	Pier 3	Pier 5
Sta. A	8410+87.00	8413+97.00
Elev. B	5926.67	5930.57
Elev. C	5925.70	5929.60
Elev. D	5926.66	5930.56
Elev. E	5925.38	5929.28

Note: For Limits of Excavation see Dwg. No. B-13.

HAWARD ENGINEERING TECHNOLOGY CENTER HNTB

DIVISION OF HIGHWAYS

PIERS 3 AND 5 DETAILS

(RAMP C)

Designer	B. Haynes	Structure	F-17-IQ
Detailer	C. Meyers		

QUANTITIES BY	J.M.V.	3-84
CHECKED BY	T.M.S.	3-84
CHECKED BY	C.E.M.	
DETAILED BY	J.M.V.	

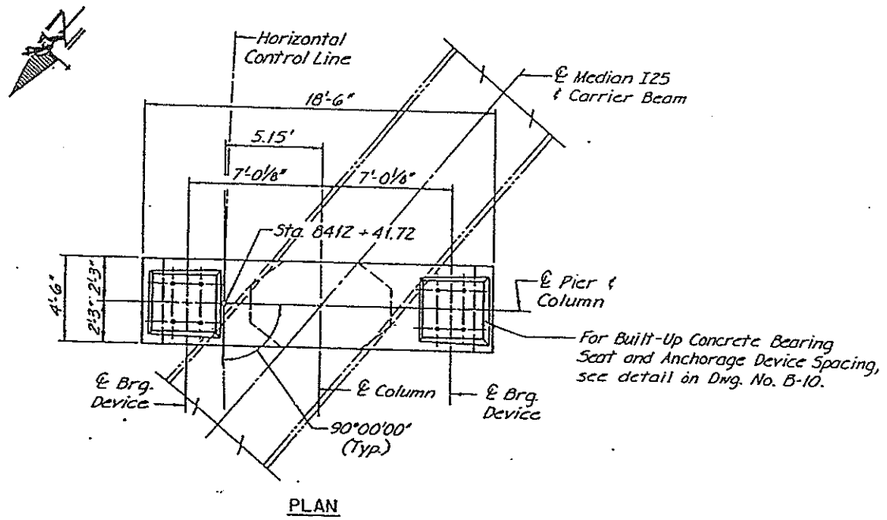

PLAN

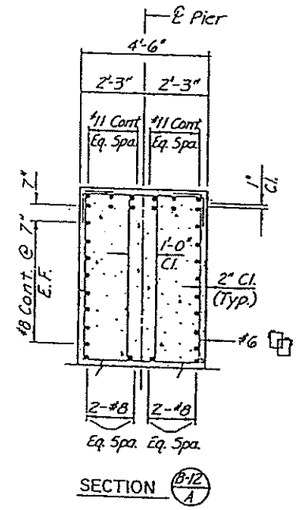

SECTION B-12 / A

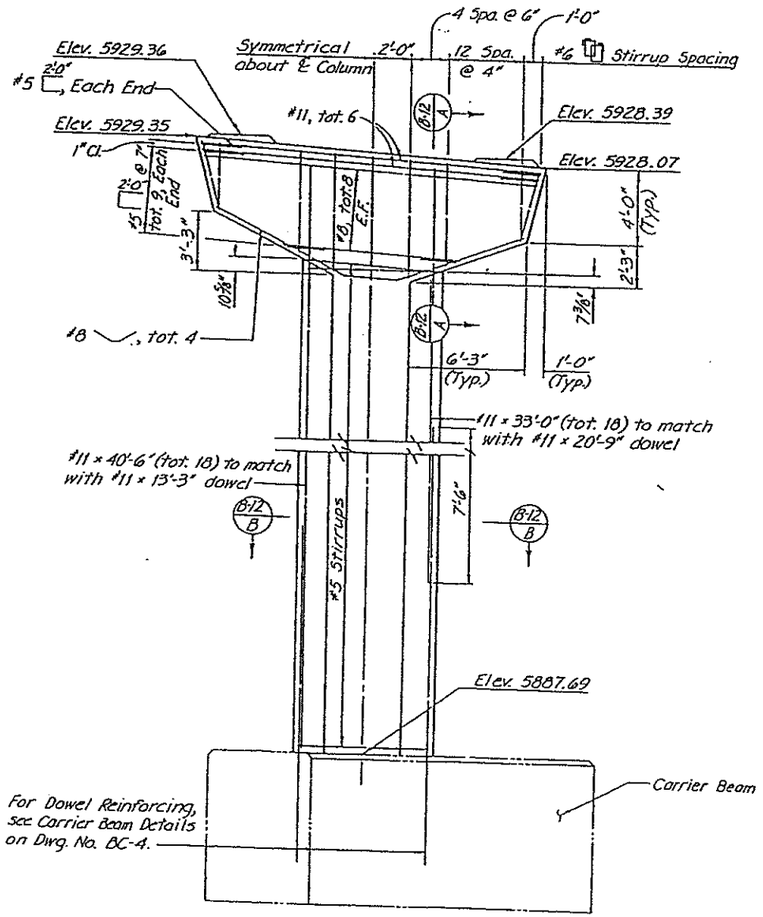

ELEVATION

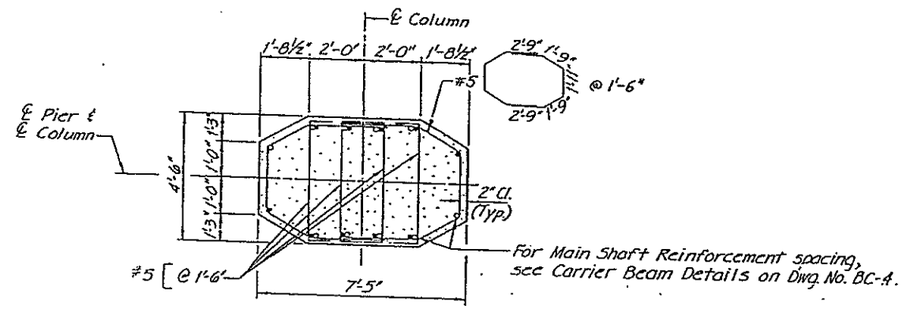

SECTION B-12 / B

AS CONSTRUCTED			
NO REVISIONS 11-6-56	REVISED	VOID	

FEDERAL AID REGION NO.	DIVISION	PROJ. NO.	SHEET NO.	TOTAL SHEETS
VIII	COLORADO	I25-2(154)	51	79

REVISIONS		

QUANTITIES BY	3-64
CHECKED BY	D.M.J. 3-64
DETAILED BY	C.E.H. T.N.S. 3-64

DIVISION OF HIGHWAYS

PIER 4 DETAILS

(RAMP C)

Designer B. Haynes | Structure F-17-10

AS CONSTRUCTED			
NO REVISIONS		REVISED 11-6-96	VOID

FEDERAL ROAD REGION NO.	DIVISION	PROJ. NO.	SHEET NO.	TOTAL SHEETS
VIII	COLORADO	I25-2(154)	52	79

REVISIONS		

DRAWN BY	D.M.J.	
CHECKED BY	C.E.M.	
QUANTITIES BY	J.M.V.	3-84
CHECKED BY	T.M.S.	3-84
DESIGNED BY		
DETAILED BY		

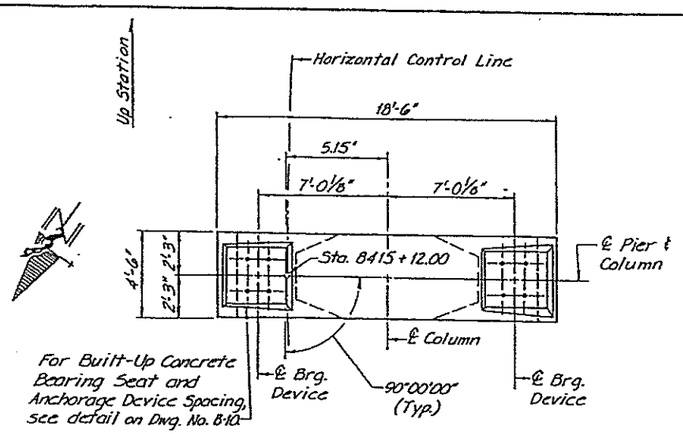

PLAN

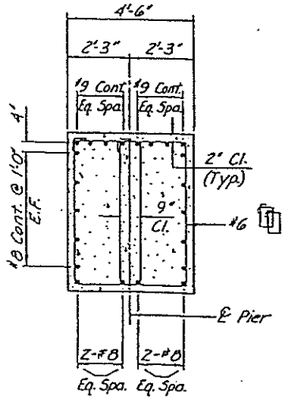

SECTION B-13/A

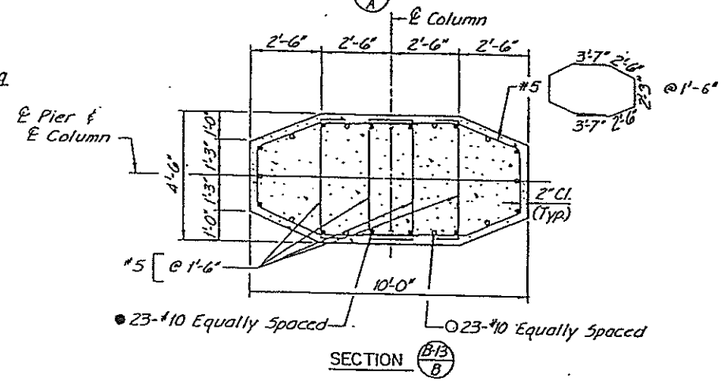

SECTION B-13/B

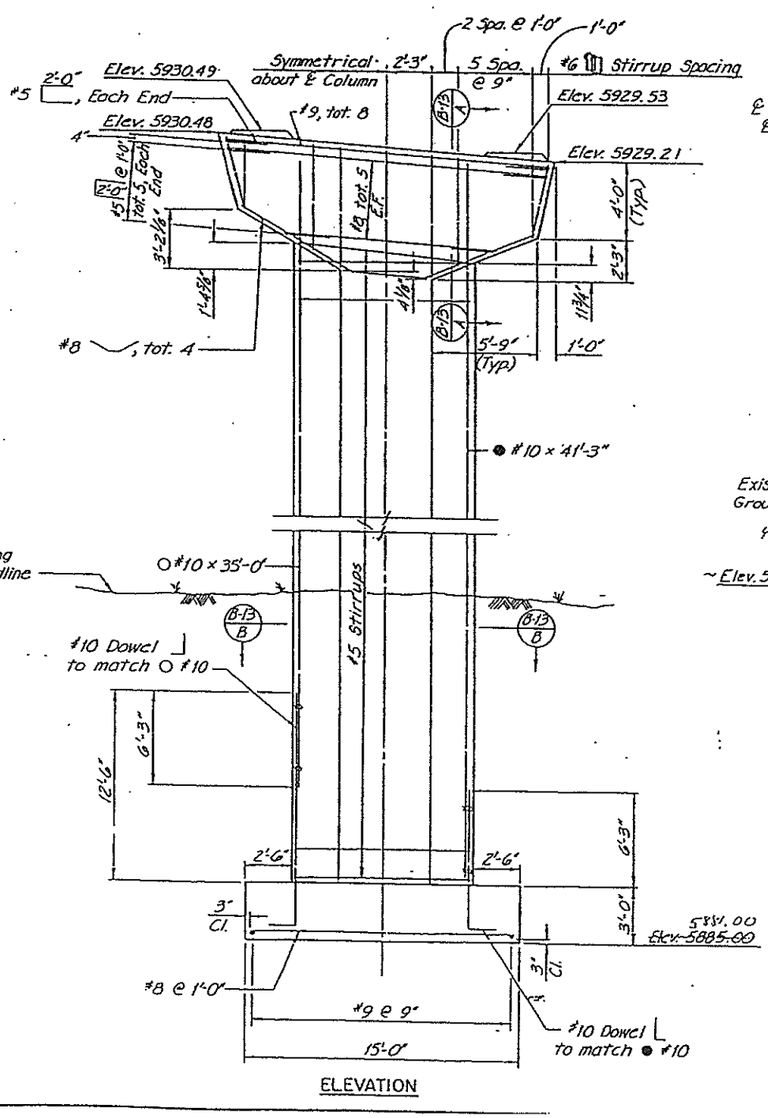

ELEVATION

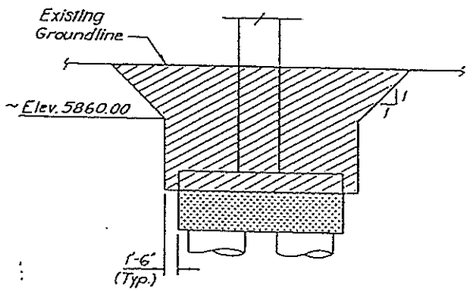

PIER 3

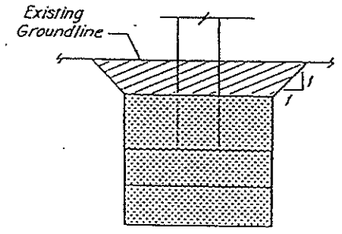

PIER 5

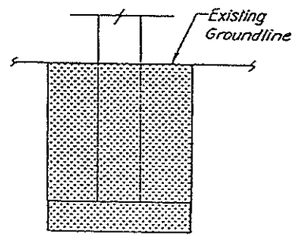

PIER 6

LIMITS OF EXCAVATION

Sand or Clay Excavation

Rock Excavation

Note: Footing concrete ~~shall be~~ W.O.S. placed directly against rock surface. All Excavation to be included in Item 206 Structure Excation.

DIVISION OF HIGHWAYS

PIER 6 DETAILS

(RAMP C)

Designer	B. Haynes	Structure Numbers	F-17-IQ
Detailer	C. Meyers		

AS CONSTRUCTED			
NO REVISIONS 11-6-56	REVISED	VOID	

FEDERAL ROAD REGION NO.	DIVISION	PROJ. NO.	SHEET NO.	TOTAL SHEETS
VIII	COLORADO	125 - 2(154)	53	79

REVISIONS		

DETAILED BY R.D.G.
CHECKED BY T.H.S.
DATE 3-64 3-64

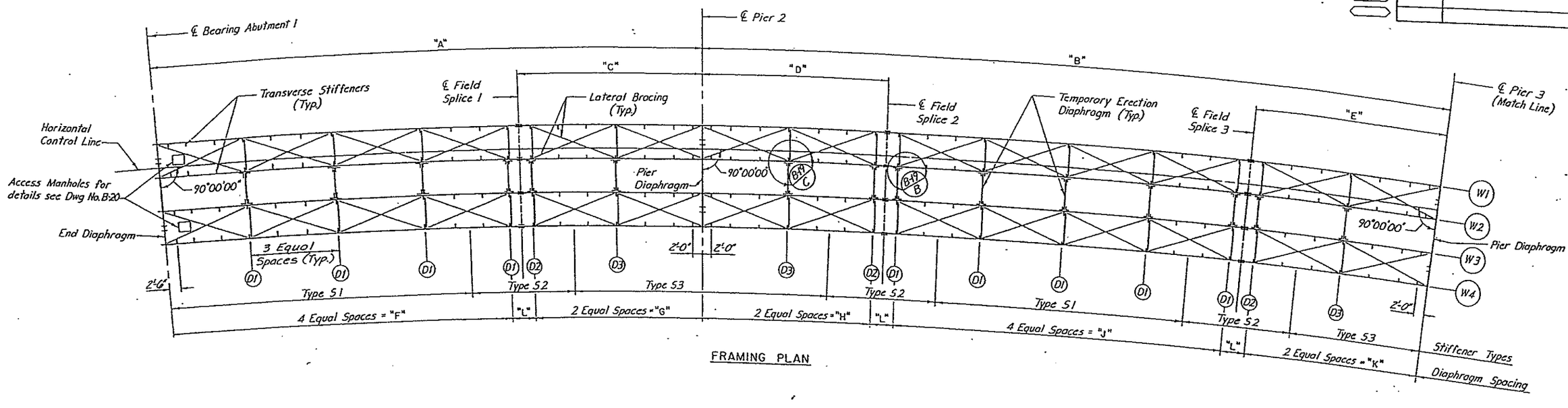

FRAMING PLAN

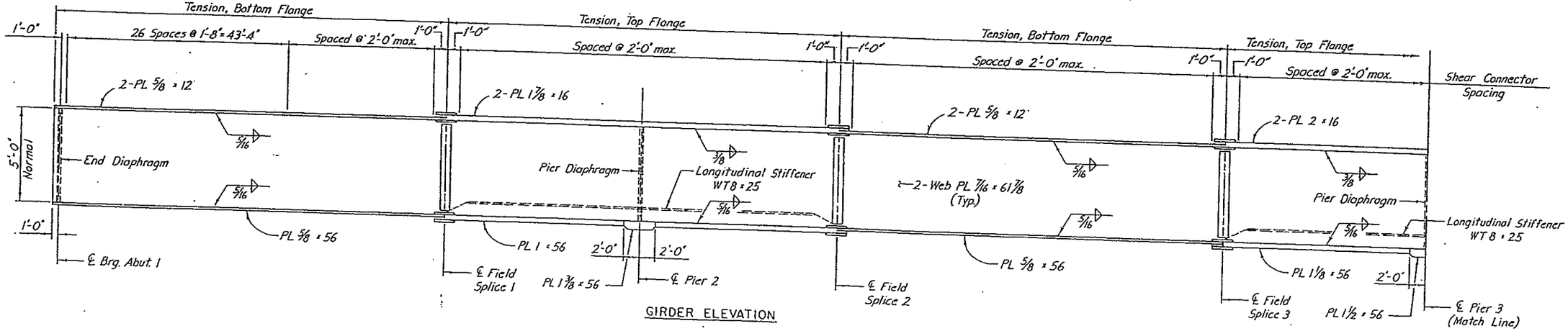

GIRDER ELEVATION

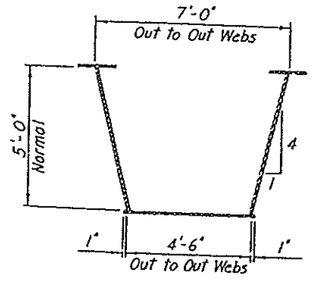

BOX GIRDER GEOMETRY

Dimension	"A"	"B"	"C"	"D"	"E"	"F"	"G"	"H"	"J"	"K"	"L"
Web "W1"	115'-5 3/8"	155'-7 11/16"	35'-2 7/16"	35'-1 1/4"	36'-1 1/4"	77'-9 3/16"	32'-8 5/16"	32'-7 3/16"	79'-5 1/4"	33'-7 1/4"	5'-0"
Horizontal Control Line	115'-0"	155'-0"	35'-0 11/16"	34'-11 1/2"	35'-11 7/16"	—	—	—	—	—	4'-11 3/4"
Web "W2"	114'-9 3/4"	154'-6 15/16"	35'-0"	34'-10 13/16"	35'-10 3/4"	77'-3 13/16"	32'-6 3/16"	32'-4 15/16"	78'-11 3/16"	33'-4 5/16"	4'-11 3/16"
Web "W3"	114'-1 1/16"	153'-10 1/16"	34'-9 5/16"	34'-8 3/8"	35'-8 1/4"	76'-10 3/16"	32'-4 1/16"	32'-2 1/16"	78'-6 1/4"	33'-2 5/8"	4'-11 1/4"
Web "W4"	113'-5 1/16"	152'-11 9/16"	34'-7 1/8"	34'-5 15/16"	35'-5 3/4"	76'-5 1/16"	32'-1 3/8"	32'-0 3/8"	78'-0 9/16"	33'-0 1/2"	4'-11"

GIRDER DIMENSION SCHEDULE

NOTES:

FOR END & PIER DIAPHRAGMS & FIELD SPLICE DETAILS, SEE DWG. NO. B-18.

FOR INTERMEDIATE DIAPHRAGMS, TRANSVERSE & LONGITUDINAL STIFFENERS & LATERAL BRACING DETAILS, SEE DWG. NO. B-19.

HUNTER

DIVISION OF HIGHWAYS

FRAMING PLAN
AND
GIRDER ELEVATION
(RAMP C)

Designer D. Jones

AS CONSTRUCTED			
NO REVISIONS 11-6-86	REVISED		VOID

FEDERAL ROAD REGION NO.	DIVISION	PROJ. NO.	SHEET NO.	TOTAL SHEETS
VIII	COLORADO	I 25 – 2(154)	54	79

REVISIONS

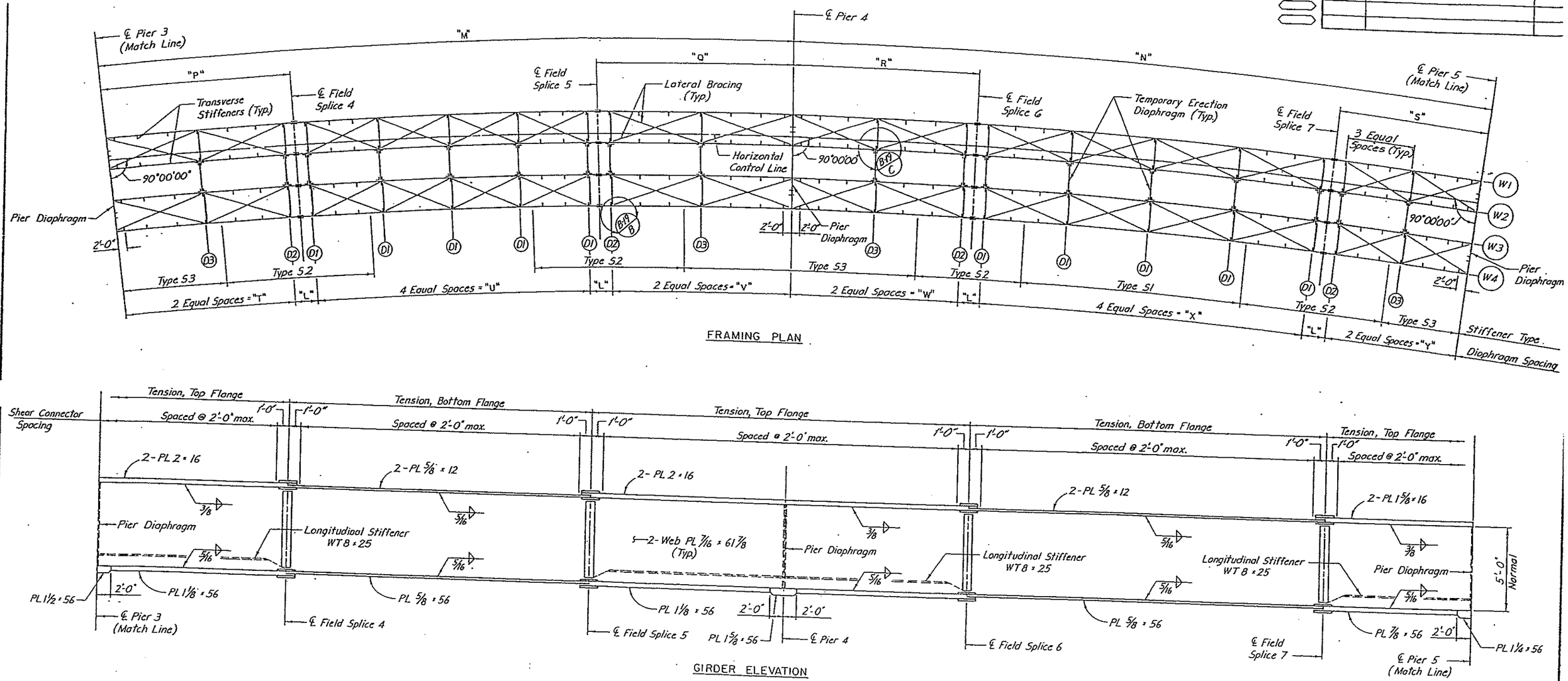

FRAMING PLAN

GIRDER ELEVATION

Dimension	"M"	"N"	"P"	"Q"	"R"	"S"	"T"	"U"	"V"	"W"	"X"	"Y"
Web "W1"	155'-4 5/16"	155'-11 1/16"	37'-3 11/16"	39'-4 15/16"	37'-0 1/16"	30'-7 1/16"	34'-9 11/16"	73'-7 11/16"	36'-10 15/16"	34'-6 1/16"	83'-3 15/16"	28'-1 1/16"
Horizontal Control Line	154'-8 5/8"	155'-3 3/8"	37'-1 13/16"	39'-3"	36'-10 1/4"	30'-5 9/16"	—	—	—	—	—	—
Web "W2"	154'-5 9/16"	155'-0 5/16"	37'-1 1/8"	39'-2 1/4"	36'-9 1/2"	30'-4 15/16"	34'-7 5/16"	73'-2 9/16"	36'-8 11/16"	34'-3 11/16"	82'-10 1/4"	27'-11 1/8"
Web "W3"	153'-6 3/4"	154'-1 7/16"	36'-10 1/2"	38'-11 1/2"	36'-6 15/16"	30'-2 13/16"	34'-4 7/8"	72'-9 1/2"	36'-5 7/8"	34'-1 5/16"	82'-4 7/16"	27'-9 3/16"
Web "W4"	152'-8"	153'-2 5/8"	36'-7 15/16"	38'-8 3/4"	36'-4 3/8"	30'-0 11/16"	34'-2 7/16"	72'-4 5/16"	36'-3 1/4"	33'-10 7/8"	81'-10 9/16"	27'-7 3/16"

GIRDER DIMENSION SCHEDULE

Note: All dimensions are at outside of webs

NOTES:

FOR END & PIER DIAPHRAGMS & FIELD SPLICE DETAILS, SEE DWG. NO. B-18.

FOR INTERMEDIATE DIAPHRAGMS, TRANSVERSE & LONGITUDINAL STIFFENERS & LATERAL BRACING DETAILS, SEE DWG. NO. B-19.

HOWARD NEEDLES TAMMEN & BERGENDOFF INTE

DIVISION OF HIGHWAYS

FRAMING PLAN
AND
GIRDER ELEVATION
(RAMP C)

Designer D. Jones | Structure F-17-1Q
Detailer R.D.G.

DETAILED BY R.D.G. | CHECKED BY T.N.S. | 3-84

AS CONSTRUCTED			
NO REVISIONS 11-6-86	REVISED	VOID	

FEDERAL ROAD REGION NO.	DIVISION	PROJ. NO.	SHEET NO.	TOTAL SHEETS
VIII	COLORADO	125-2(154)	55	79

REVISIONS		

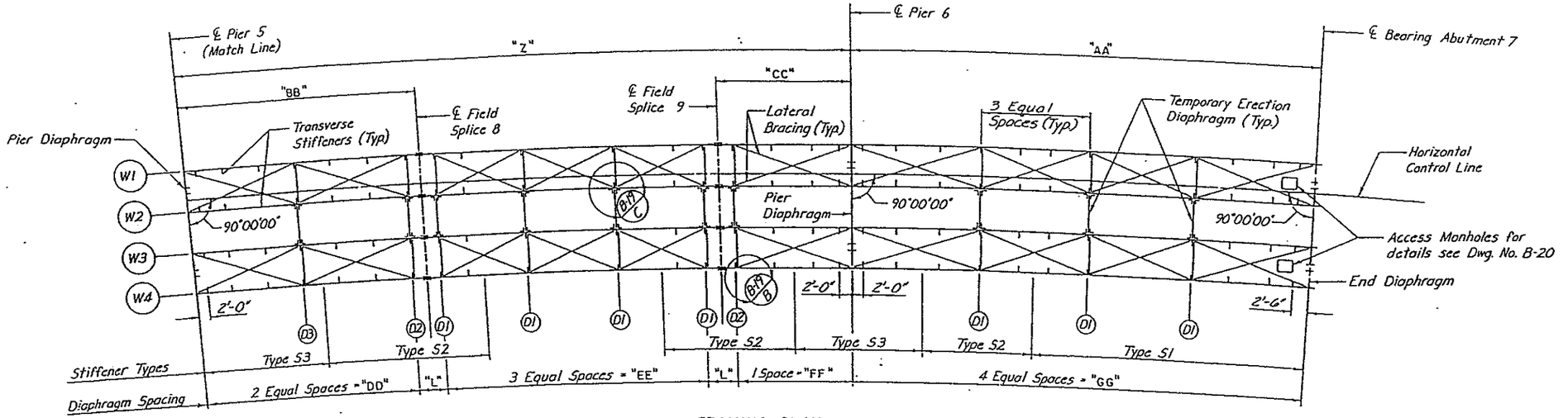

FRAMING PLAN

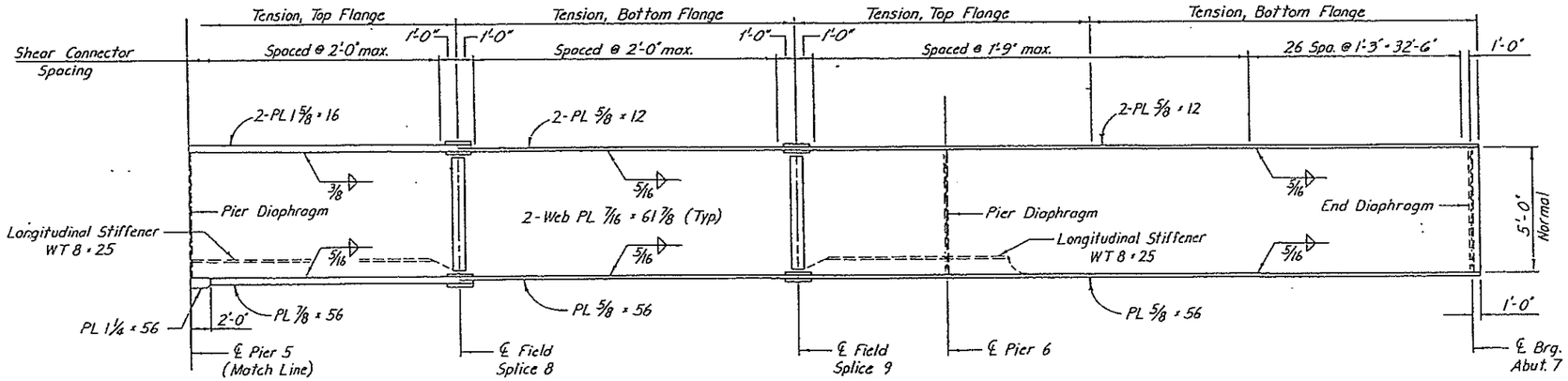

ELEVATION

Dimension	"Z"	"AA"	"BB"	"CC"	"DD"	"EE"	"FF"	"GG"
Web "W1"	115'-5 3/4"	80'-4"	37'-0 1/16"	19'-11 1/2"	34'-6 1/16"	53'-6 3/16"	17'-5 1/2"	77'-10"
Horizontal Control Line	115'-0"	80'-0"	36'-10 1/4"	19'-10 1/2"	———	———	———	———
Web "W2"	114'-9 3/4"	79'-10 7/16"	36'-9 1/2"	19'-10 1/8"	34'-3 11/16"	53'-2 1/2"	17'-4 5/16"	77'-4 3/8"
Web "W3"	114'-1 11/16"	79'-4 13/16"	36'-6 5/16"	19'-8 11/16"	34'-1 5/16"	52'-10 7/16"	17'-3 1/16"	76'-11 7/16"
Web "W4"	113'-5 11/16"	78'-11 1/4"	36'-4 3/8"	19'-7 5/16"	33'-10 7/8"	52'-7"	17'-1 3/16"	76'-5 3/4"

GIRDER DIMENSION SCHEDULE

Note: All dimensions are at outside of webs

NOTES:

FOR END & PIER DIAPHRAGMS & FIELD SPLICE DETAILS, SEE DWG. NO. B-18.

FOR INTERMEDIATE DIAPHRAGMS, TRANSVERSE & LONGITUDINAL STIFFENERS & LATERAL BRACING DETAILS, SEE DWG. NO. B-19.

ENTER

DIVISION OF HIGHWAYS

FRAMING PLAN
AND
GIRDER ELEVATION
(RAMP C)

Designer D. Jones		Structure Numbers	F-17-IQ
Detailer R. Gordon			
Drawing Number B-16	of 34		Drawings

CHECKED BY	T.N.S.	3'-03"	
DETAILED BY	R.D.G.	3'-04"	
QUANTITIES BY	J.N.V.		
CHECKED BY	T.N.S.		

AS CONSTRUCTED			
NO REVISIONS 11-6-86	REVISED		VOID

FEDERAL ROAD REGION NO.	DIVISION	PROJ. NO.	SHEET NO.	TOTAL SHEETS
VIII	COLORADO	I25-2(154)	60	79

REVISIONS		
R-1	10-17-84	Changed Note	L.E.G.

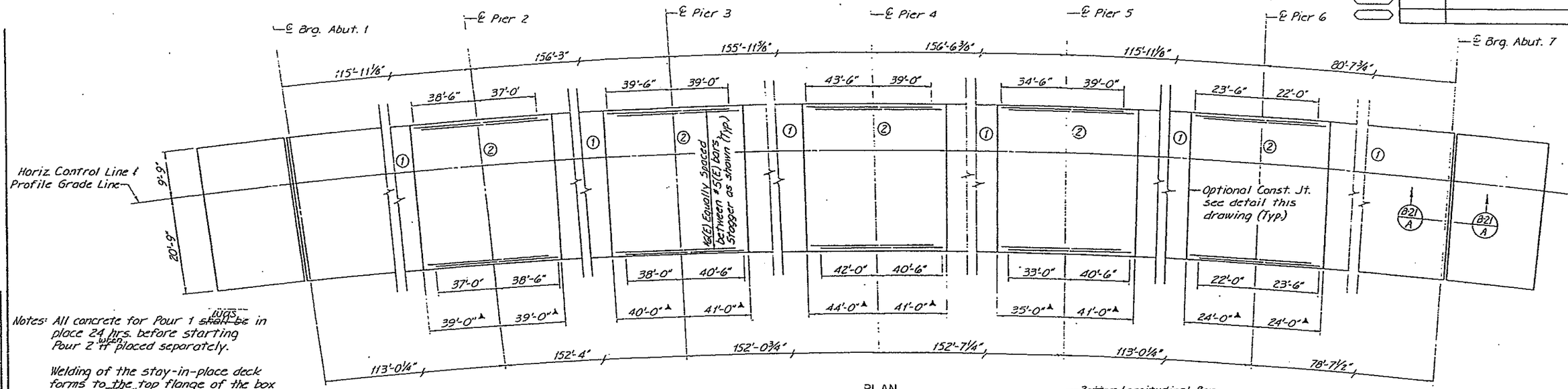

Notes: All concrete for Pour 1 ~~shall be~~ was in place 24 hrs. before starting Pour 2 ~~if~~ when placed separately.

Welding of the stay-in-place deck forms to the top flange of the box girders ~~shall~~ was not be permitted in Sections ②.

PLAN

① Denotes pouring sequence.
▲Dimensions are at Horizontal Control Line.

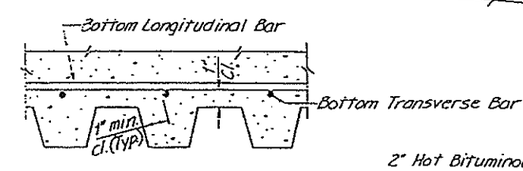

STAY IN PLACE DECK FORM DETAIL

Note: Deck ~~shall be~~ was formed using permanent bridge deck forms between the girders and ~~are~~ were not to be used to form the overhangs. See Special Provisions.

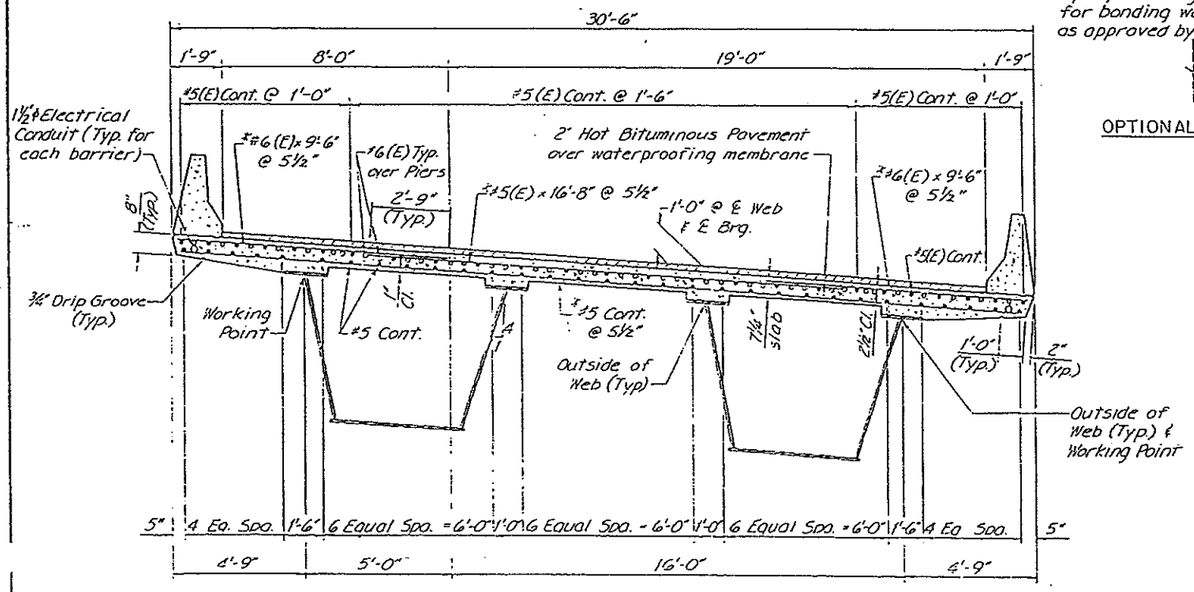

TYPICAL SECTION

* Place radially

Sandblasted ~~Sandblast~~ prior to applying approved epoxy bonding agent suitable for bonding wet concrete as approved by the Engineer

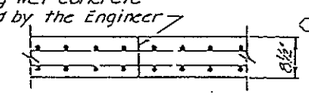

OPTIONAL CONSTRUCTION JOINT DETAIL

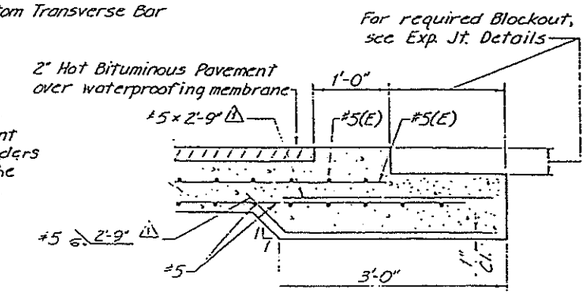

SECTION B-21 A

⚠ Match Bottom Longitudinal Reinforcing Steel.

(E) - Epoxy Coated Bars

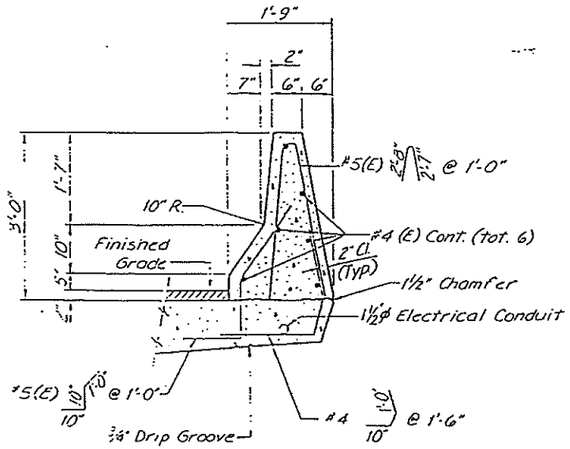

SECTION THRU BARRIER

DIVISION OF HIGHWAYS

SUPERSTRUCTURE DETAILS

(RAMP C)

Designer J Vaughn	Structure Numbers	F-17-IQ
Detailer C Meyers		

CHECKED BY	DETAILED BY	QUANTITIES BY	CHECKED BY
D.M.J.	C.E.M.	J.M.V.	T.N.S.
11-24	11	3-84	3-84

AS CONSTRUCTED					
NO REVISIONS		REVISED	11-6-85	VOID	

FEDERAL ROAD REGION NO.	DIVISION	PROJ. NO.	SHEET NO.	TOTAL SHEETS
VIII	COLORADO	I25-2(154)	75	79

	REVISIONS		
R-1	10-17-84	Revised Note and Pay Item	L.E

GENERAL NOTES

ALL WORK ~~SHALL BE~~ WAS DONE ACCORDING TO THE STANDARD SPECIFICATIONS OF THE DIVISION OF HIGHWAYS, STATE OF COLORADO, APPLICABLE TO THE PROJECT.

STRUCTURE EXCAVATION AND BACKFILL ~~SHALL BE~~ WAS IN ACCORDANCE WITH STANDARD M-206-2.

GRADE 60 REINFORCING STEEL IS REQUIRED FOR #4 BARS AND LARGER.

THE FOLLOWING TABLE GIVES THE MINIMUM LAP SPLICE LENGTH FOR REINFORCING BARS:

BAR SIZE	#4	#5	#6	#7	#8	#9	#10	#11
SPLICE LENGTH FOR CLASS A CONCRETE	1'-0"	1'-3"	1'-8"	2'-3"	3'-0"	3'-10"	4'-10"	5'-11"
SPLICE LENGTH FOR CLASS S CONCRETE	1'-0"	1'-3"	1'-6"	2'-0"	2'-7"	3'-4"	4'-2"	5'-1"

THE ABOVE SPLICE LENGTHS ~~SHALL BE~~ WERE INCREASED BY 20 PERCENT FOR 3 BAR BUNDLES.

APPLIED WIND LOADS AND EARTHQUAKE LOADS WERE NOT CONSIDERED IN ANALYZING THE STRUCTURE FOR STABILITY DURING THE CONSTRUCTION STAGES.

E.F. = EACH FACE
F.F. = FAR FACE
N.F. = NEAR FACE

ALL CHAMFERS 3/4" UNLESS OTHERWISE NOTED.

DESIGN DATA

CURRENT AASHTO SPECIFICATIONS:

LIVE LOAD: AASHTO HS-20-44 AND INTERSTATE ALTERNATE
DEAD LOAD: ASSUMES 48 LBS. PER SQ. FT. FOR BITUMINOUS PAVEMENT
DESIGN METHOD: LOAD FACTOR DESIGN
REINFORCED CONCRETE:

CLASS A CONCRETE: f'_c = 3,000 psi, n = 9

REINFORCING STEEL: #4 BARS AND LARGER: f_y = 60,000 psi

PRESTRESSED CONCRETE:

CLASS S CONCRETE: f'_{ci} = 5,000 psi - AT TIME OF RELEASE OF PRESTRESS FORCE.
f'_c = 6,000 psi - AT 28 DAYS.
AIR ENTRAINMENT 4 - 8%

PRESTRESSING STEEL: f'_s = 270,000 psi

~~USE~~ USED
~~USE~~ 1/2" ϕ STRANDS (STRESS-RELIEVED) CONFORMING TO THE REQUIREMENTS OF ASTM-A421. ALTERNATE STRANDS ARE LOW-RELAXATION STRANDS MEETING THE REQUIREMENTS OF ASTM-A416-68 GRADE 270.
FOR
~~IF~~ LOW-RELAXATION STRANDS ARE USED, THE NET COMPRESSIVE STRESS IN THE CONCRETE AFTER ALL LOSSES ~~SHALL BE~~ AT LEAST AS LARGE AS THAT PROVIDED BY THE STRESS-RELIEVED STRANDS. ~~ALSO~~ THE ULTIMATE STRENGTH OF THE STRUCTURE WITH THE LOW-RELAXATION STRANDS ~~SHALL MEET~~ THE REQUIREMENTS OF THE APPLICABLE AASHTO SPECIFICATIONS. MET.

INITIAL PRESTRESS FORCE: THE JACKING FORCE PER TENDON INCLUDING ALL LOSSES

$$F_i = 0.74 \times f'_s \times A_s$$

INCLUDES FRICTION LOSSES BASED ON μ = 0.25 AND K = 0.0002 AND LONG TERM LOSSES OF 33,000 psi.

FINAL PRESTRESS FORCE: (FOR VALUES OF F_f SEE DWG. NO. BC-4).

A_s = AREA OF PRESTRESSING STEEL
f'_s = ULTIMATE STRENGTH OF PRESTRESSING STEEL

SUMMARY OF QUANTITIES

ITEM	DESCRIPTION	UNIT	TOTALS	
206	STRUCTURE EXCAVATION	Cu.Yd.	495	
206	STRUCTURE BACKFILL (CLASS 2)	Cu. Yd.	280	
503	DRILLED CAISSON (72 INCH)	Lin.Ft.	47	
503	DRILLED CAISSON (84 INCH)	Lin.Ft.	49	
R-1 ② 503	CAISSON (SPECIAL)	LIN.FT.	61	
601	CONCRETE CLASS S (BRIDGE)	Cu.Yd.	~~256~~	358.22
602	REINFORCING STEEL	Lb.	~~31,510~~	31,918
602	REINFORCING STEEL (EPOXY COATED)	Lb.	5,525	
① 618	PRESTRESSING STEEL WIRE OR STRAND	Lb.	~~44,330~~	45,485

Included
① ~~Includes~~ furnishing, placing in the concrete, and post-tensioning the prestressing steel. The Contractor ~~shall~~ did furnish all stressing equipment and accessories required for installation and stressing operations. Weight ~~shall~~ was not be remeasured, but ~~shall be~~ the quantity shown. WAS

R-1 ② Quantities for Information Only, ~~to be~~ included in the Bid Item 503 Caisson (Special)
Str. Exc. 153 Cu. Yds. Conc. Cl. A (Bridge)
146 Cu. Yd., Reinf. Steel 28,293 Lbs.

INDEX OF DRAWINGS

DWG. NO. BC-1 CENTRAL PIER SH470-125 GENERAL INFORMATION - SUMMARY OF QUANTITIES
DWG. NO. BC-2 CENTRAL PIER SH470-125 PLAN AND ELEVATION
DWG. NO. BC-3 CENTRAL PIER SH470-125 CONSTRUCTION SEQUENCE
DWG. NO. BC-4 CENTRAL PIER SH470-125 MISCELLANEOUS DETAILS
DWG. NO. BC-5 CENTRAL PIER SH470-125 MISCELLANEOUS DETAILS

DESIGNED BY	FHH	5-84
CHECKED BY	BWH	5-84
DETAILED BY	CEM	5-84
CHECKED BY		
QUANTITIES BY		
CHECKED BY		
INITIAL	ST	12-13
	DER	4
	ART	

CROSS REFERENCE DRAWING NUMBER
8
SECTION OR DETAIL IDENTIFICATION

BRUNING 44-133 60960

Reviewed [signature] 7-24-84
BRIDGE ENGINEER DATE

DIVISION OF HIGHWAYS

CENTRAL PIER – SH 470-125
GENERAL INFORMATION
SUMMARY OF QUANTITIES

Station 583+25.83 to
Station 584+95.83

Near: Denver Sec. 3 T. 6 S. R. 67 W.

Designer	S. Treyger	Structure Numbers	
Detailer	R. Torgeson		

Drawing Number BC-1 of 5 Drawings

Revision Dates (Preliminary Stage Only)

AS CONSTRUCTED			
NO REVISIONS	11-6-86	REVISED	VOID

FEDERAL ROAD REGION NO.	DIVISION	PROJ. NO.	SHEET NO.	TOTAL SHEETS
VIII	COLORADO	I-25-2(154)	74	79

REVISIONS		

DESIGNED BY	P.W.M.	3-84
QUANTITIES BY	T.N.S.	3-84
CHECKED BY		
DETAILED BY	T.N.S.	3-84
CHECKED BY	M.S.A.	3-84

Edge of Shoulder
Sta. 4451+78 ℄ Brg. Abut 1
Sta. 4452+98 ℄ Pier 2
Sta. 4454+58 ℄ Pier 3
Sta. 8415+92 ℄ Brg. Abut 7
8420
Sta. 3414+84 ℄ Brg. Abut 1
3415
4455
4452
Sta. 7418+02 ℄ Brg. Abut 5
7420
Sta. 3415+59 ℄ Pier 2
Ramp E (Future)
9'-0"
Sta. 4456+18 ℄ Pier 4
Sta. 8415+12 ℄ Pier 6
8415
627,500 N.
2,178,500 E.
Sta. 3416+59 ℄ Pier 3
7'-0"
Ramp B
Sta. 7416+57 ℄ Pier 4
0'-9"
Future I-25 Widening
Ramp C
Sta. 8413+97 ℄ Pier 5
Future Edge of Shoulder
Sta. 4457+58 ℄ Pier 5
5'-0"
Edge of Shoulder
Sta. 4459+10 ℄ Pier 6
Sta. 8412+75.36 ℄ Pier 4
7415
Sta. 3417+98.68 ℄ Pier 4
580
585
℄ Median I-25
S07°50'15"E 590
2nd Level
TO DENVER
TO COLORADO SPRINGS
4460
Sta. 7414+71.88 ℄ Pier 3
I-25 Overpass
Edge of Shoulder
Future Edge of Shoulder
Sta. 4462+50 ℄ Pier 8
Ramp F (Future)
Sta. 8410+87 ℄ Pier 3
Future I-25 Widening
8'-0"
39'-0"
Str. No. F-17-IT
5'-0"
Sta. 3419+51 ℄ Pier 5
3420
Sta. 4461+10 ℄ Pier 7
8410
Sta. 7413+02 ℄ Pier 2
Sta. 8409+32 ℄ Pier 2
Sta. 3420+66 ℄ Brg. Abut 6
Sta. 7411+72 ℄ Brg. Abut 1
Sta. 4463+55 ℄ Brg. Abut 9
Sta. 8408+17 ℄ Brg. Abut 1
Str. No. F-17-IO
℄ Median S.H. 470 (Future)
3rd Level
4th Level
S86°24'52"E
7410
1st Level
TO LITTLETON

Ramp C Sta. 8412+33.94 = I-25 Sta. 584+00.98
Ramp B
I-25
Ramp C
Ramp B Sta. 7414+71.90 = I-25 Sta. 583+88.85
Ramp C Sta. 8412+25.00
Ramp B Sta. 7414+64.05

NOTES

DIVISION OF HIGHWAYS

S.H. 470 / I-25 INTERCHANGE

(RAMPS B & C)

Designer	R. Hedrick	Structure Numbers	I-25
Detailer	M. Anzio		S.H. 470

STATE DEPARTMENT OF HIGHWAYS
DIVISION OF HIGHWAYS
D. O. H. FORM NO. 126
REV. FEB. 1984

13

AS CONSTRUCTED

NO REVISIONS ☐ REVISED ☐ VOID ☐

FED. ROAD REGION	DIVISION	PROJ. NO.	SHEET NO.	SHEET TOTAL
VIII	Colorado	IA06/IB02	55	

REVISIONS			
A-1	4-2-90	REVISED QUANTITIES	D.K.M.

GENERAL NOTES

ALL WORK SHALL BE DONE ACCORDING TO THE STANDARD SPECIFICATIONS OF THE DIVISION OF HIGHWAYS, STATE OF COLORADO.

ELEVATIONS CONTAINED IN THESE PLANS ARE CALCULATED FROM A RECENT FIELD SURVEY. THE CONTRACTOR SHALL VERIFY ALL DEPENDENT DIMENSIONS IN THE FIELD BEFORE ORDERING OR FABRICATING ANY MATERIAL OR BEGINNING CONSTRUCTION OF BRIDGE WIDENING.

STATIONS AND DIMENSIONS CONTAINED IN THESE PLANS ARE CALCULATED FROM THE "AS CONSTRUCTED PLANS". THOSE STATIONS AND DIMENSIONS MAY BE ADJUSTED TO MEET THE EXISTING STRUCTURE. THE CONTRACTOR SHALL VERIFY ALL DEPENDENT DIMENSIONS IN THE FIELD BEFORE ORDERING OR FABRICATING ANY MATERIAL OR BEGINNING CONSTRUCTION OF BRIDGE WIDENING.

CLASS I FINISH, FOLLOWED BY APPLICATION OF A COLORED ACRYLIC COATING, WILL BE REQUIRED ON ALL EXPOSED CONCRETE SURFACES DOWN TO 1'-0" BELOW GROUND LINE. REQUIREMENTS FOR COATING ARE GIVEN IN REVISIONS OF SECTION 601, STRUCTURAL CONCRETE (COATING).

ALL EXTERIOR CONCRETE CORNERS SHALL BE CONSTRUCTED WITH ¾" CHAMFERS, UNLESS OTHERWISE NOTED.

GRADE 60 REINFORCING STEEL IS REQUIRED FOR #4 BARS AND LARGER. ALL REINFORCING STEEL SHALL BE EPOXY COATED, UNLESS NOTED OTHERWISE.

THE FOLLOWING TABLE GIVES THE MINIMUM CLASS "B" LAP SPLICE FOR EPOXY COATED REINFORCING BARS:

BAR SIZE	#4	#5	#6	#7	#8	#9	#10	#11
SPLICE LENGTH FOR CLASS B CONCRETE	1'-3"	1'-7"	2'-0"	2'-9"	3'-9"	4'-7"	5'-9"	7'-1"
SPLICE LENGTH FOR CLASS D CONCRETE	1'-3"	1'-7"	1'-10"	2'-3"	2'-11"	3'-7"	4'-9"	5'-10"

THE ABOVE SPLICE LENGTHS SHALL BE INCREASED BY 20 PERCENT FOR 3-BAR BUNDLES AND 33 PERCENT FOR 4-BAR BUNDLES

ANY SPLICES NOT SHOWN SHALL BE APPROVED BY THE ENGINEER.

ABBREVIATIONS:

E.W. = EACH WAY
E.F. = EACH FACE
F.F. = FAR FACE
N.F. = NEAR FACE
J = JUNCTION BOX
H.C.L. = HORIZONTAL CONTROL LINE
H.B.P. = HOT BITUMINOUS PAVEMENT
CONT. = CONTINUOUS
(B) = BLACK REINFORCING BAR (EPOXY COATED REINFORCING BAR MAY BE PROVIDED AT NO ADDITIONAL COST TO THE PROJECT).

THE INFORMATION SHOWN ON THESE PLANS CONCERNING TYPE AND LOCATION OF UNDERGROUND UTILITIES IS NOT GUARANTEED TO BE ACCURATE OR ALL- INCLUSIVE. THE CONTRACTOR IS RESPONSIBLE FOR MAKING HIS OWN DETERMINATION AS TO THE TYPE AND LOCATION OF UNDERGROUND UTILITIES AS MAY BE NECESSARY TO AVOID DAMAGE TO THEM.

PERMANENT STEEL BRIDGE DECK FORMS MAY BE USED.

STRUCTURE EXCAVATION AND BACKFILL SHALL BE IN ACCORDANCE WITH STANDARD M-206-2, UNLESS NOTED OTHERWISE. ADEQUATE SHORING OF THE EXCAVATION ADJACENT TO THE ROADWAYS SHALL BE PROVIDED DURING ALL PHASES OF CONSTRUCTION. METHOD OF SHORING SHALL BE APPROVED BY THE ENGINEER. PAYMENT FOR SHORING TO BE INCLUDED IN ITEM 206, STRUCTURE EXCAVATION.

THE CONTRACTOR IS RESPONSIBLE FOR THE STABILITY OF THE STRUCTURE DURING CONSTRUCTION

DESIGN DATA

CURRENT AASHTO SPECIFICATIONS:

LIVE LOAD: HS-20-44 AND INTERSTATE ALTERNATE
DEAD LOAD: ASSUMES 48 LBS. PER SQ. FT. FOR BITUMINOUS PAVEMENT

REINFORCED CONCRETE:

CLASS B CONCRETE: fc = 1,200 psi, n = 9: F'c = 3,000 psi AT 28 DAYS
CLASS D CONCRETE: fc = 1,800 psi, n = 8: F'c = 4,500 psi AT 28 DAYS
CLASS S CONCRETE: fc = 2,200 psi, n = 7: F'c = 5,500 psi AT 28 DAYS

REINFORCING STEEL: #4 BARS AND LARGER: fs = 24,000 psi, fy = 60,000 psi

PRESTRESSED CONCRETE: F's = 270,000 psi, fs = (SEE DETAILS)

DESIGN METHODS:

ABUTMENT, PIER CAPS AND FOOTINGS, I-GIRDERS & SLAB: SERVICE LOAD DESIGN
PIER COLUMNS: LOAD FACTOR DESIGN

SUMMARY OF QUANTITIES

ITEM	DESCRIPTION	UNIT	STRUCTURE No. F-17-ID SUPER-STRUCT.	ABUT #1	PIER #2	PIER #3	ABUT #4	APPROACH SLAB (2)	TOTAL
202	Removal Of Portions Of Present Structure	L.S.	L.S.	L.S.	—	—	L.S.	L.S.	L.S.
(3) 206	Structure Excavation	Cu. Yd.	—	168	188	160	207	—	723
206	Structure Backfill (Class 1)	Cu. Yd.	—	69	—	—	86	—	155
206	Structure Backfill (Class 2)	Cu. Yd.	—	29	180	148	37	—	394
403	Hot Bituminous Pavement (Grading E) (Haul And Asphalt) (Rubberized)	Ton	150	—	—	—	—	17	167
502	Steel Piling (HP 12 x 53)	Lin. Ft.	—	293	—	—	218	—	511
507	Concrete Slope And Ditch Paving (Reinforced)	Cu. Yd.	—	38	—	—	44	—	82
515	Waterproofing (Membrane)	Sq. Yd.	695	—	—	—	—	78	773
518	Bridge Compression Joint Sealer	Lin. Ft.	—	7	—	—	7	134	148
(1) 601	Concrete Class B (Bridge)	Cu. Yd.	—	52	66	64	55	—	237
601	Concrete Class D (Bridge)	Cu. Yd.	198	32	—	—	34	54	318
602	Reinforcing Steel	LB	—	1,148	2,587	2,587	1,148	—	7,470
602	Reinforcing Steel (Epoxy Coated)	LB	52,030	8,598	12,683	12,595	9,563	12,482	107,951
606	Bridge Rail Type 4 (470)	Lin. Ft.	304	—	—	—	—	—	304
613	3 Inch Electrical Conduit	Lin. Ft.	334	—	—	—	—	—	334
618	Prestressed Concrete Unit (I Section) (95 To 100 Feet)	Each	3	—	—	—	—	—	3
618	Prestressed Concrete Unit (I Section) (60 To 65 Feet)	Each	6	—	—	—	—	—	6

(1) ½" Expansion Joint Material To Be Included In The Bid Price.
(2) Quantities Shown Include Both Approaches.
(3) Includes 82 Cu. Yds. Structure Excavation for Concrete Slope and Ditch Paving
(38 Cu. Yds. @ Abut. #1)
(44 Cu. Yds. @ Abut. #4)

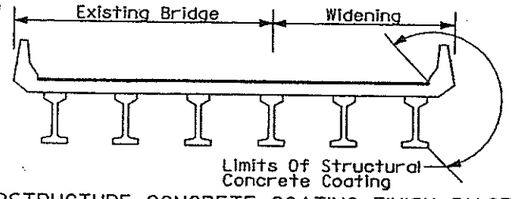

SUPERSTRUCTURE CONCRETE COATING FINISH DIAGRAM

DRAWING LIST

A-1

DWG. NO.	TITLE
B1	GENERAL INFORMATION AND SUMMARY OF QUANTITIES
B2	GENERAL LAYOUT
B3	ENGINEERING GEOLOGY
B4	CONSTRUCTION LAYOUT
B5	FOOTING AND PILING LAYOUT
B6	ABUTMENT # 1 DETAILS
B7	ABUTMENT # 4 DETAILS
B8	ABUTMENT DETAILS
B9	WING WALL DETAILS
B10	RETAINING WALL AND BRIDGE RAIL TYPE 4 (470)
B11	PIERS #2 AND #3
B12	SUPERSTRUCTURE DETAILS #1
B13	SUPERSTRUCTURE DETAILS #2
B14	COLORADO G54 GIRDER
B15	SLOPE PAVING DETAILS
B16	APPROACH SLAB DETAILS
B17	BRIDGE DECK ELEVATIONS #1
B18	BRIDGE DECK ELEVATIONS #2
B19	BRIDGE DECK ELEVATIONS #3
B20	ROADWAY APPROACHES

A-1

A-1

A-1

CROSS REFERENCE DRAWING NUMBER

B

SECTION OR DETAIL IDENTIFICATION

BRIDGE DESCRIPTION

WIDENING OF 3-SPAN (62'-4¼", 99'-0", 62'-4¼") BRIDGE. CONTINUOUS PRECAST PRESTRESSED CONCRETE GIRDERS WITH CAST-IN-PLACE DECK SLAB. VARIABLE ROADWAY WIDTH, VARIABLE SKEW. BRIDGE RAIL TYPE 4 (470)

	INITIAL	DATE	CHECKED BY
DESIGNED BY	J.S.	3/90	QUANTITIES BY
CHECKED BY	D.M.	3/90	CHECKED BY
DETAILED BY	R.B.	3/90	

E-470
Engineer 470 Partnership

DIVISION OF HIGHWAYS

RAMPS B AND H OVER SE RAMP
BRIDGE WIDENING

GENERAL INFORMATION AND SUMMARY OF QUANTITIES

Station	7424+90.30 to 7427+20.10
Near : Littleton	Sec. 3 T. 6S R. 67W
Designer	J. Showers
Detailer	R. Bretz
Structure Numbers	F-17-ID
Drawing Number	B1 of 20 Drawings

Revision Dates (Preliminary Stage Only)

OSA2:[40,144]125GN01.90A

OSA:[40,144]125GN01.90A 27-MAR-1990 11:02

STATE OF COLORADO
STATE DEPARTMENT OF HIGHWAYS
DIVISION OF HIGHWAYS
S. H. FCRH NO. 126
REV. FEB. 1984

AS CONSTRUCTED			
NO REVISIONS ☐	REVISED ☐	VOID ☐	

FED. ROAD REGION	DIVISION	PROJ. NO.	SHEET NO.	TOTAL SHEETS
VIII	Colorado	IA06/1842	56	

REVISIONS			

INITIAL	DATE	
J.S.	3/90	DESIGNED BY
D.M.	3/90	CHECKED BY
R.B.	3/90	QUANTITIES BY
		CHECKED BY
		DETAILED BY
		CHECKED BY

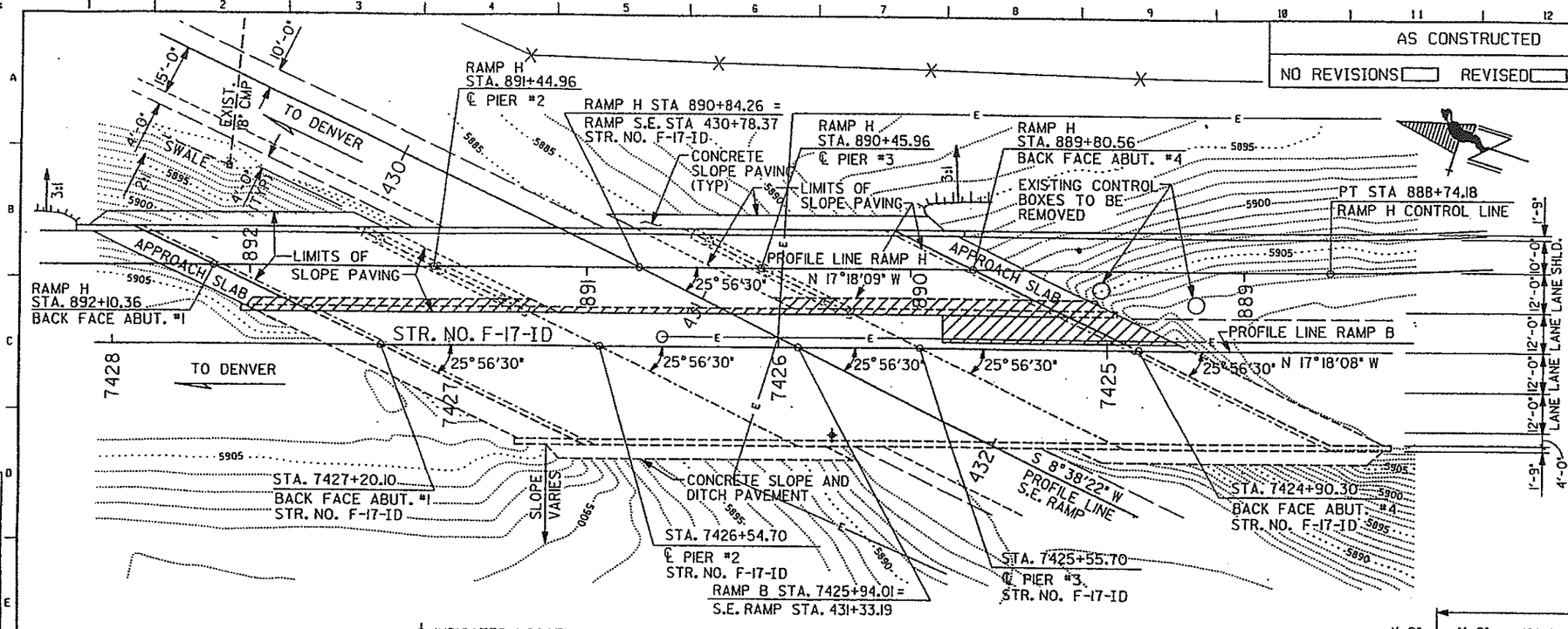

PROFILE GRADE STR. F-17-ID
ALONG PGL RAMP B (SEE NOTE 4)

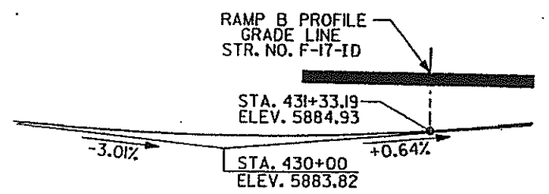

PROFILE GRADE S.E. RAMP
(SEE NOTE 4)

⊕ INDICATES LOCATION OF MINIMUM VERTICAL CLEARANCE

PLAN

▨ INDICATES EXISTING STRUCTURE TO BE REMOVED.

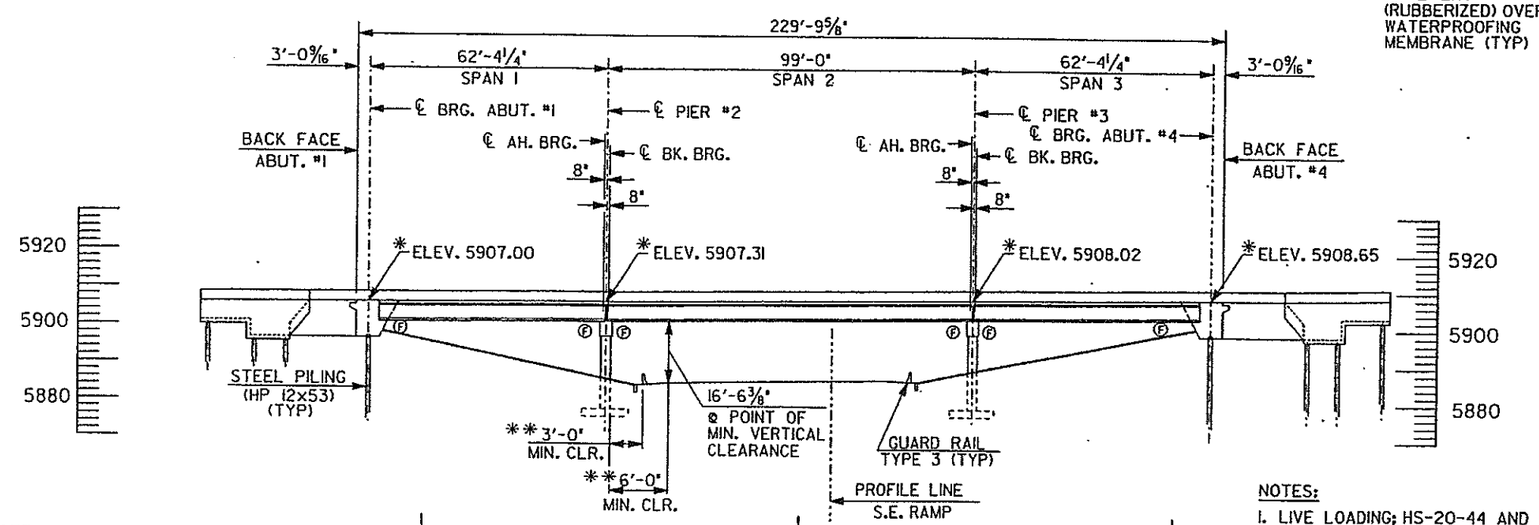

SECTION
(TAKEN AT PROFILE LINE)

*INDICATES FINISHED ROADWAY ELEVATIONS AT TOP OF EXISTING PAVEMENT ON PROFILE LINE RAMP B (SEE NOTE 4)
**MEASURED PERPENDICULAR TO S.E. RAMP

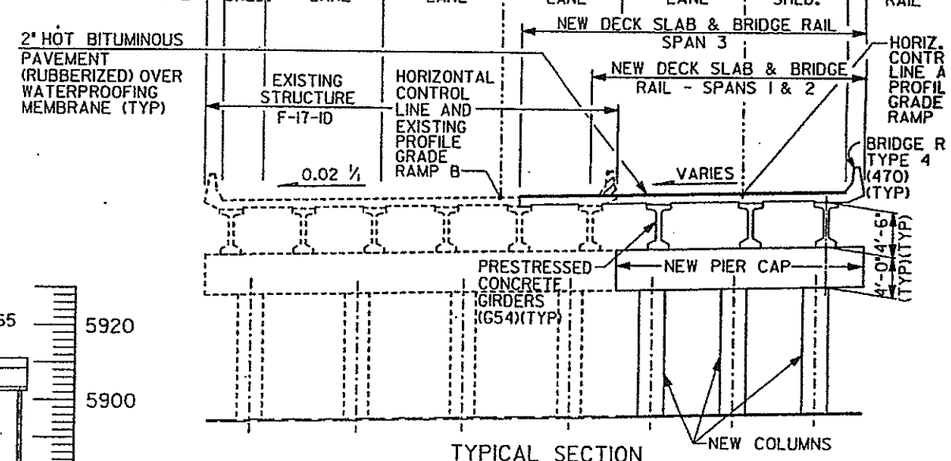

TYPICAL SECTION
(LOOKING UP-STATION RAMP B)

NOTES:

4. VERTICAL GEOMETRY IS BASED ON E-470 SURVEY OF EXISTING RAMP B BRIDGE. CONTRACTOR TO VERIFY EXISTING GEOMETRY PRIOR TO BEGINNING OF CONSTRUCTION.
5. SEE ROADWAY DWGS. FOR INFORMATION REGARDING SITE GRADING, RETAINING WALLS, DRAINAGE & UTILITIES.

NOTES:

1. LIVE LOADING: HS-20-44 AND INTERSTATE ALTERNATE
2. Ⓕ IS FIXED BEARING
3. LAYOUT BASED ON CONSTRUCTION LAYOUT OF EXISTING RAMP B BRIDGE, STRUCTURE F-17-ID, FEDERAL AID PROJECT I-25-2(153). CONTRACTOR TO VERIFY GEOMETRY PRIOR TO BEGINING OF CONSTRUCTION OF BRIDGE WIDENING.

E-470
Engineer 470 Partnership

DIVISION OF HIGHWAYS

RAMPS B AND H OVER SE RAMP
BRIDGE WIDENING

GENERAL LAYOUT

Designer	J. Showers	Structure Numbers	F-17-ID
Detailer	R. Bretz		
Drawing Number	B2 of 20 Drawings		

OSA2:[40,144]125PE02.DGN

Revision Dates	(Preliminary Stage Only)

FED ROAD REG NO.	DIVISION	PROJECT NO.	SHEET NO.	TOTAL SHEETS
VIII	COLORADO	1Aϕ6/1Bϕ2	57	

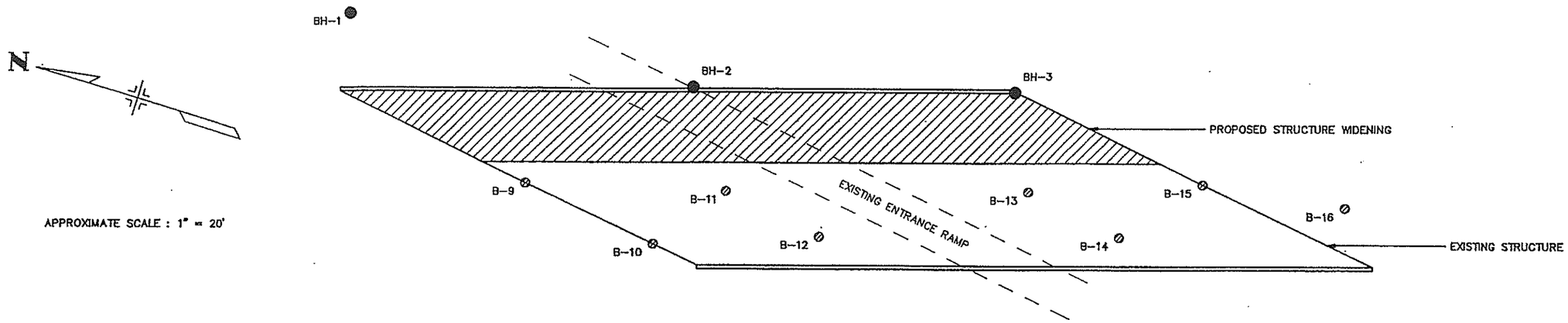

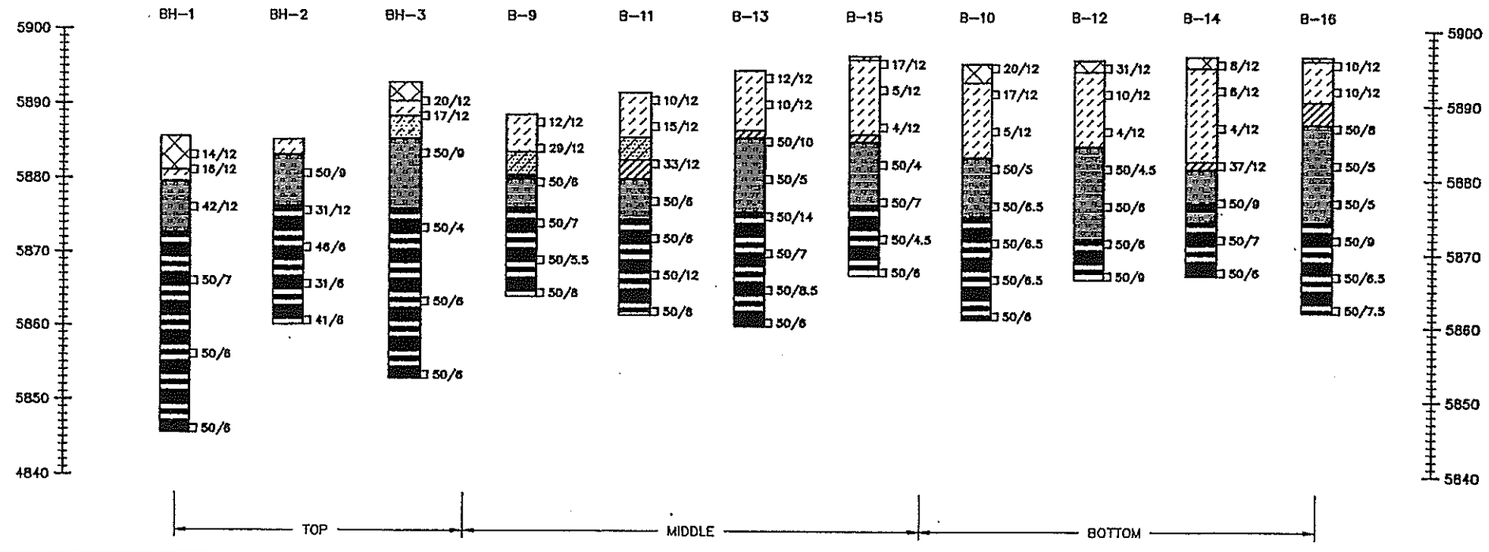

SUMMARY OF TEST RESULTS

Sample No.	Depth	Classification: Type of Deposit or Visual	Classification: AASHTO	Grading Analysis: Percent Gravel	Coarse Sand	Fine Sand	Silt and Clay	Atterberg Limits: Liquid Limit LL	Plastic Limit PL	Plasticity Index IP	Water Cont. W %	Wet Unit Weight γ P.C.F.	Unconfined Strength Qu T.S.F.	Triaxial Shear Strength: ϕ°	C P.S.I.	Dia. of Sample (Inches)
BH-1	4	Clay, sandy									17.2	129				1.935
BH-1	19	Claystone									16.4	135	6.5			1.935
BH-1	29	Claystone					92	51	18	33	17.2	132				1.935
BH-2	4	Sandstone					41				16.0	128				1.935
BH-2	9	Claystone									23.9	121				1.935
BH-2	19	Claystone									15.2	134	8.3			1.935
BH-3	2	Clay, sandy					61	42	16	26	13.0	130				1.935
BH-3	9	Sandstone					7				4.9	116				1.935
BH-3	29	Claystone									16.1	130				1.935
BH-3	39	Claystone									20.6	125	7.3			1.935

TYPE OF MATERIAL

- Fill, clay, sandy, stiff to very stiff, slightly moist to very moist, brown.
- Clay, sandy to very sandy, stiff to very stiff, slightly moist to moist, brown (CL).
- Sand, clayey, medium dense, dry, brown.
- Sand, silty.
- Weathered bedrock.
- Sandstone bedrock, silty, medium hard to hard, slightly moist, gray, olive, rust.
- Claystone bedrock, silty to sandy, medium hard to very hard, moist, olive, gray, rust, purple.

LEGEND

TEST BORING

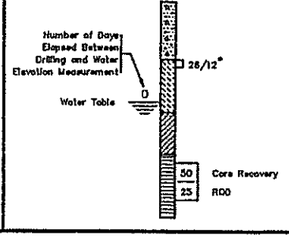

* DRIVE SAMPLE

The symbol 26/12 indicates 26 blows of a 140 pound hammer falling 30 inches were required to drive a 2.5 inch sampler 12 inches.

Location of Test Boring

Location of Test Boring

NOTES

1. Borings B-9 through B-16 were drilled and logged by others for the existing structure.
2. No free water was measured in the borings at the time of drilling.

E-470

RAMP B/H BRIDGE E-470 AT I-25

ENGINEERING GEOLOGY

CTL/Thompson, Inc.

Drawn by WJW
Checked by CSM
Date September 1989

STRUCTURE E-17-ID
DWG NO. B 3 OF 20

STATE OF COLORADO
STATE DEPARTMENT OF HIGHWAYS
DIVISION OF HIGHWAYS
C.D.H. FORM NO. 126
REV. FEB. 1984

AS CONSTRUCTED
NO REVISIONS ☐ REVISED ☐ VOID ☐

FED. ROAD REGION	DIVISION	PROJ. NO.	SHEET NO.	SHEETS TOTAL
VIII	Colorado	IA06/IB42	58	

REVISIONS			

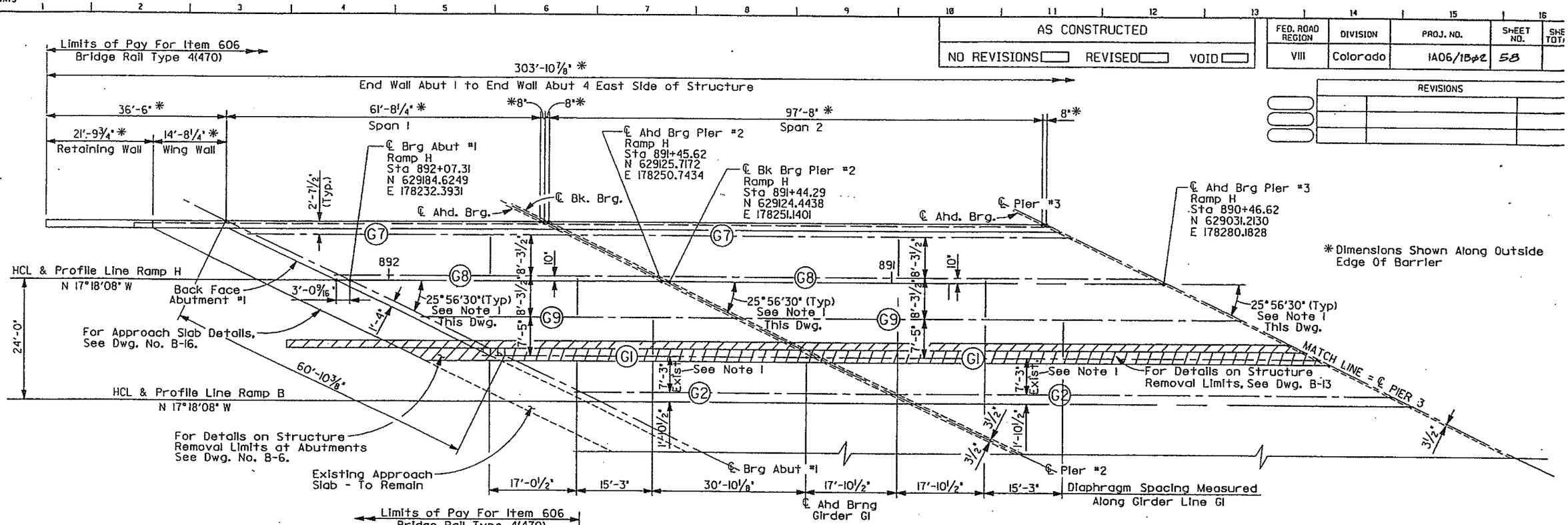

CONSTRUCTION LAYOUT - SPANS 1 & 2

*Dimensions Shown Along Outside Edge Of Barrier

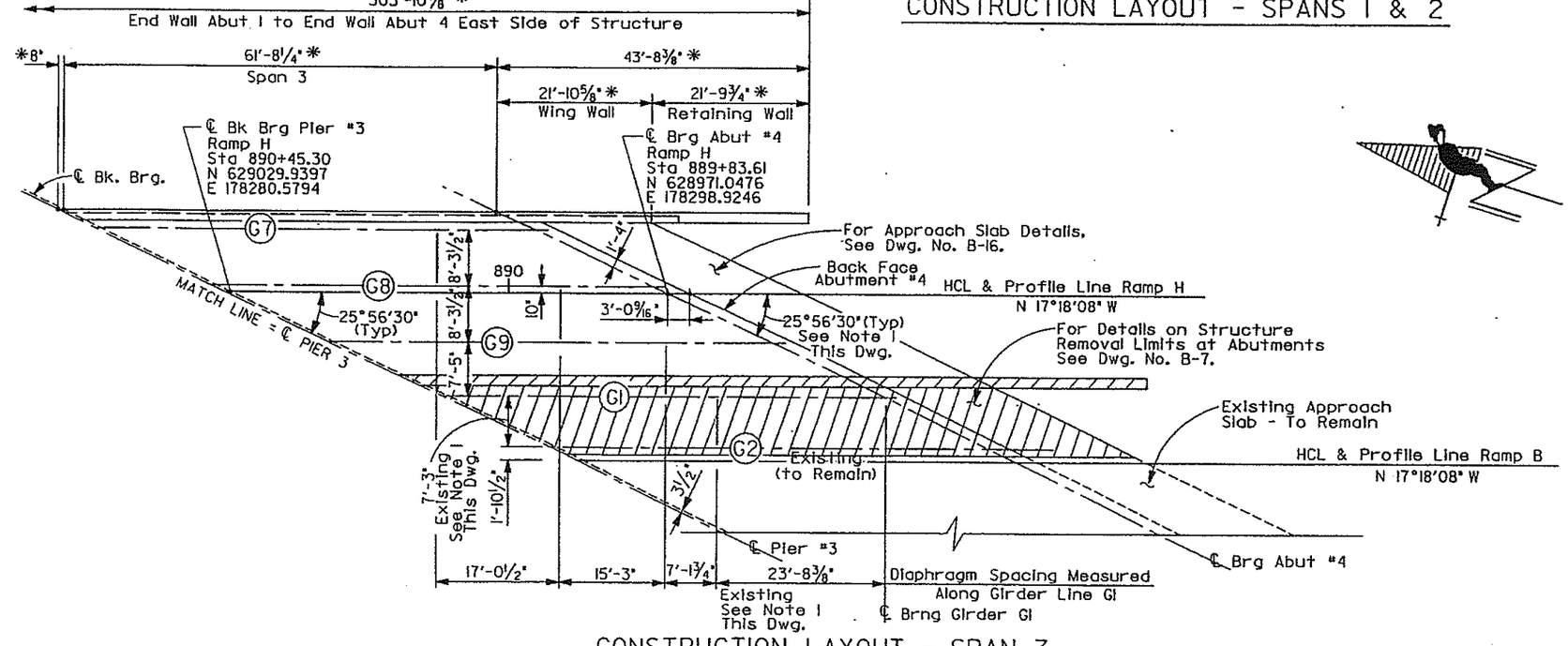

CONSTRUCTION LAYOUT - SPAN 3

▨ - Indicates Existing Structure to be Removed

Note:
1. Layout Based On Construction Layout Of Existing Ramp B Bridge, Structure F-17-ID, Federal Aid Project I-25-2(153). Contractor To Verify Existing Structure Geometry Prior To Beginning Of Construction Of Bridge Widening.
2. See Dwg. B13 For Additional Layout Information.

DESIGNED BY	J.S.	3/90
CHECKED BY	D.M.	3/90
QUANTITIES BY		
CHECKED BY		
DETAILED BY	R.B.	3/90
CHECKED BY		

DIVISION OF HIGHWAYS

RAMPS B AND H OVER SE RAMP
BRIDGE WIDENING

CONSTRUCTION LAYOUT

E-470
Engineer 470 Partnership

Designer	J. Showers	Structure Numbers	F-17-ID
Detailer	R. Bretz		
Drawing Number	B4 of 20 Drawings		

Revision Dates (Preliminary Stage Only)

OSA2:[40,144]BHCL1.90F

STATE OF COLORADO
STATE DEPARTMENT OF HIGHWAYS
DIVISION OF HIGHWAYS
C.H. FORM NO. 126
REV. FEB. 1984

AS CONSTRUCTED		
NO REVISIONS ☐	REVISED ☐	VOID ☐

FED. ROAD REGION	DIVISION	PROJ. NO.	SHEET NO.	SH TOT
VIII	Colorado	IA06/1B02	59	

REVISIONS

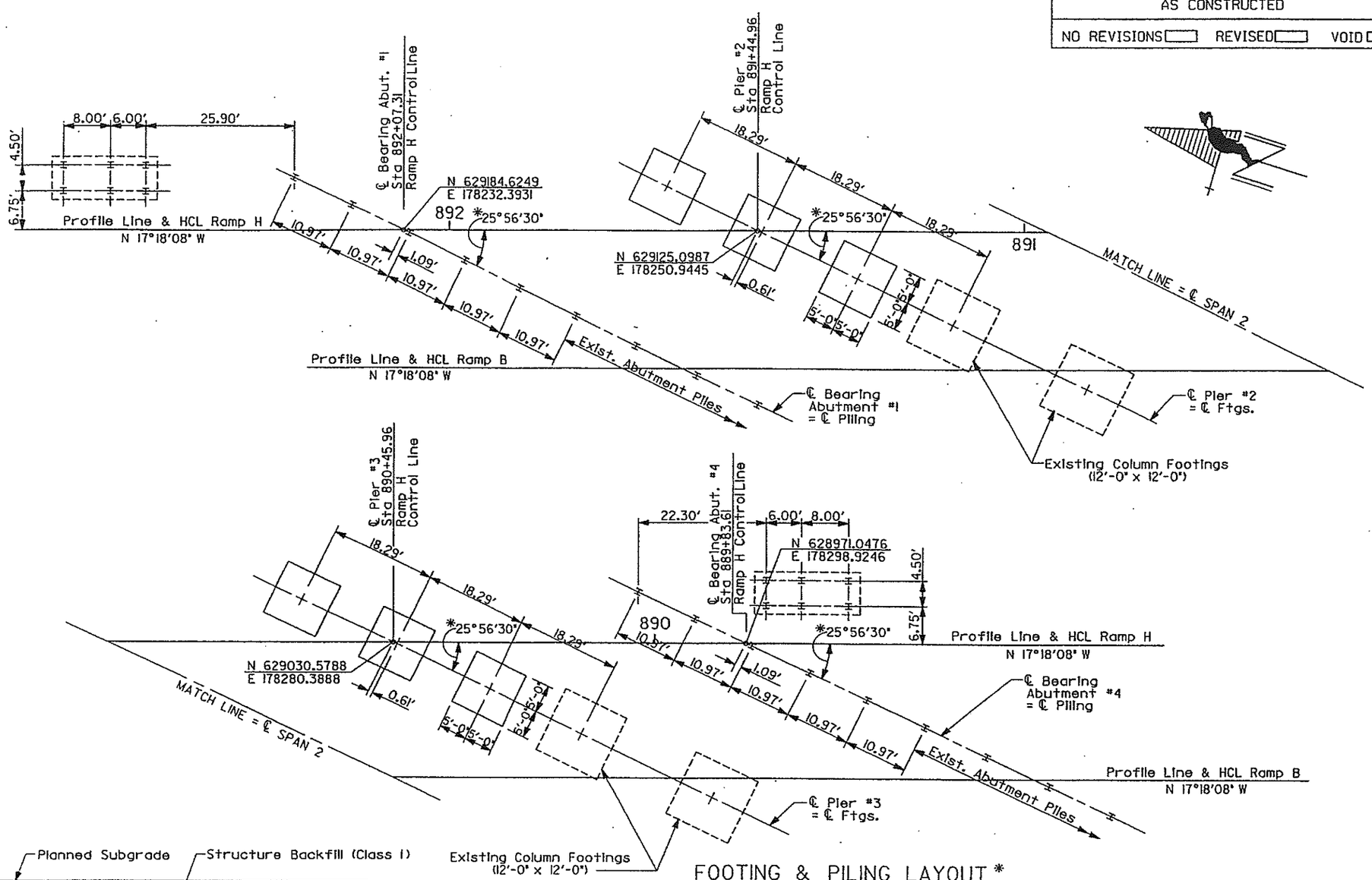

FOOTING & PILING LAYOUT *

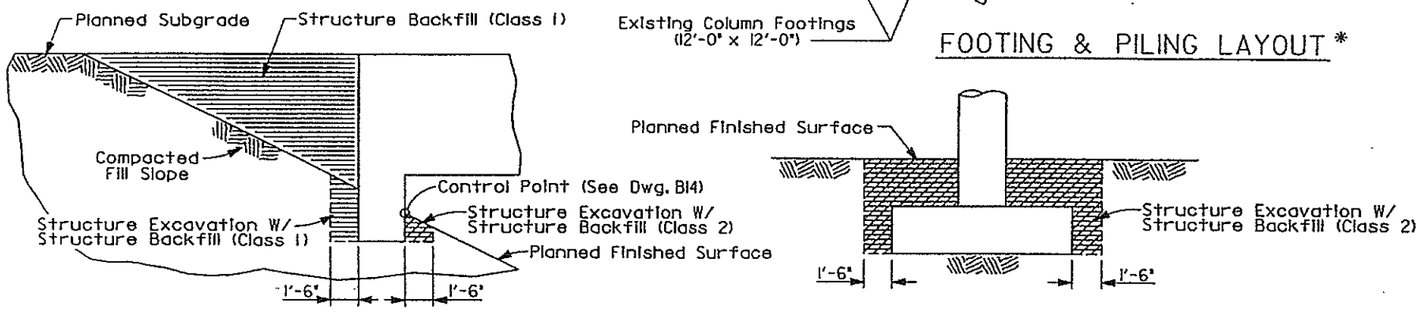

STRUCTURE EXCAVATION & BACKFILL DETAILS

PILING INFORMATION

LOCATION	PILING SIZE	MAX PILE DESIGN LOAD	EST. TIP ELEVATION
Abut 1	HP 12x53	79 Tons	5872.0
Retaining Wall At Abut 1	HP 12x53	51 Tons	5872.0
Abut 4	HP 12x53	79 Tons	5880.0
Retaining Wall At Abut 4	HP 12x53	51 Tons	5880.0

SPREAD FOOTING DESIGN PRESSURES

LOCATION	MAXIMUM FOOTING DESIGN PRESSURE
Pier 2	4.5 K / Sq. Ft.
Pier 3	4.5 K / Sq. Ft.

Notes:

1. The Piling And Footing Dimensions Shown Are At The Bottom Of The Concrete.
2. Abutment Piles Shall Be End Bearing HP 12x53 And Shall Be Driven Vertical.
3. For Utilities, See Roadway Plan Dwgs.

*Layout Based Upon Construction Layout Of Existing Ramp B Bridge, Structure F-17-1D, Federal Aid Project I-25-2(153). Contractor To Verify Existing Structure Geometry Prior To Beginning Of Construction Of Bridge Widening.

	INITIAL	DATE			
DESIGNED BY	J.S.	3/90	CHECKED BY	J.S.	3/90
CHECKED BY	D.M.	3/90	QUANTITIES BY	D.M.	3/90
DETAILED BY	R.B.	3/90	CHECKED BY		

E-470
Engineer 470 Partnership

DIVISION OF HIGHWAYS

RAMPS B AND H OVER SE RAMP BRIDGE WIDENING

FOOTING & PILING LAYOUT

Designer	J. Showers	Structure Numbers	F-17-1D
Detailer	R. Bretz		
Drawing Number	B5	of 20	Drawings

Revision Dates (Preliminary Stage Only)

OSA2:[40,144]BHFPL1.90G

STATE OF COLORADO
STATE DEPARTMENT OF HIGHWAYS
DIVISION OF HIGHWAYS
S. H. FORM NO. 126:
REV. FEB. 1984

AS CONSTRUCTED
NO REVISIONS ☐ REVISED ☐ VOID ☐

FED. ROAD REGION	DIVISION	PROJ. NO.	SHEET NO.	SH TOT
VIII	Colorado	IA06/18#2	68	

REVISIONS		

Note:
Expose And Clean Exist. Reinf. In Approach Slab For 3'-0" Beyond Limit Of Removal. Lap New Reinf. Onto Existing. See Dwg. B16 For Additional Information.

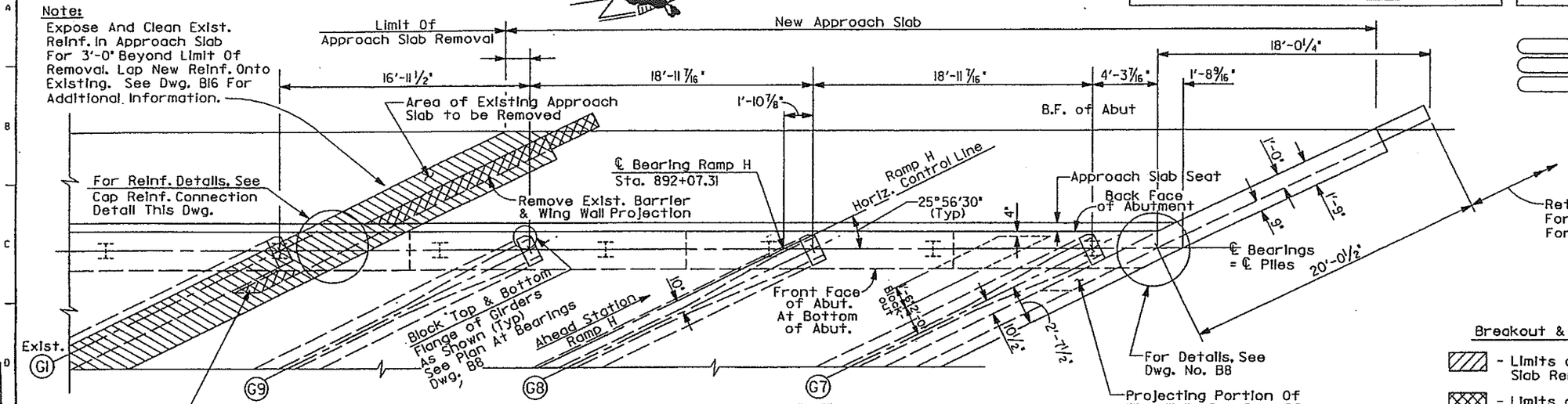

Note: Contractor To Take Appropriate Precautions To Not Damage Exist. Precast Girder During Removal Of Exist. Deck Slab And Projecting Portion Of Exist. Wing Wall.

PLAN - ABUTMENT #1

Note: Projecting Portion Of Lower Portion Of Abutment Wall Not Shown For Clarity. See Section A, Dwg. B8 For Addl. Info.

Note:
Existing Wingwall Not Shown For Clarity. See Dwg. No. B8 For Details of Removal.

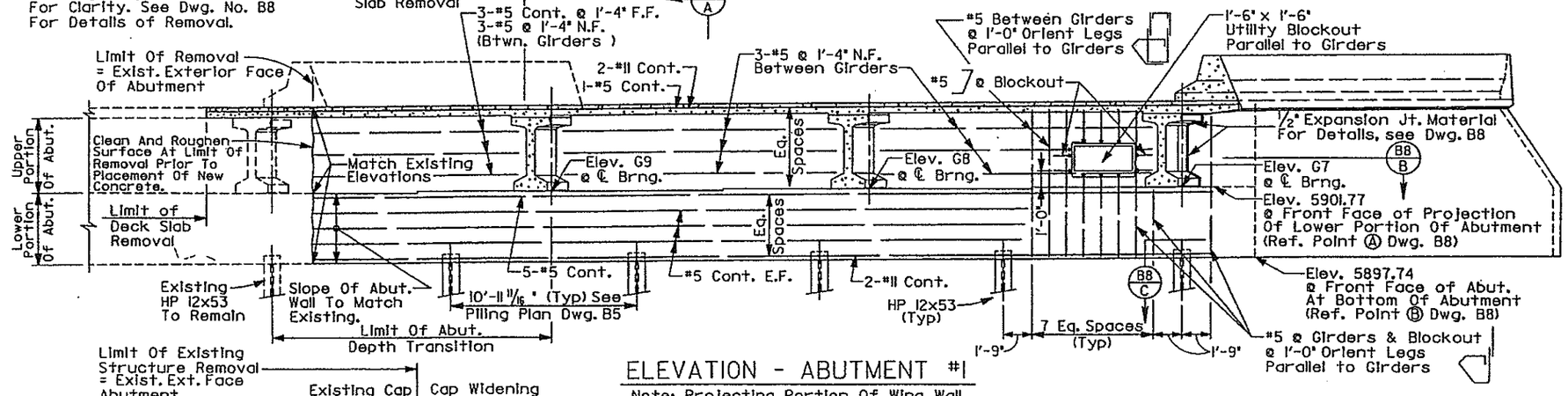

ELEVATION - ABUTMENT #1

Note: Projecting Portion Of Wing Wall Not Shown For Clarity.

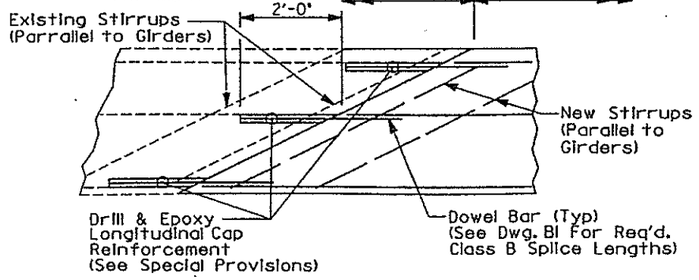

CAP REINFORCING CONNECTION DETAIL

TABLE OF GIRDER SEAT ELEVATIONS*

GIRDER	ELEVATION @ ℄ BEARING
G7	5902.02
G8	5901.88
G9	5901.76

*Elevations Are At Bottom of Bearing Pad.

Breakout & Removal Legend

▨ - Limits of Deck Slab, Barrier & Approach Slab Removal

▩ - Limits of Full Removal

Notes:

1. For Barrier Details, See Dwg. No. B13
2. For Wingwall Details, See Dwg. No. B9
3. At Limits Of Existing Structure Removal, Saw Cut 1" Into Exposed Concrete Surfaces Prior To Removal.
4. Layout Based on Construction Layout of Existing Ramp B Bridge, Structure F-17-ID, Federal Aid Project I-25-2(153). Contractor to Verify Existing Structure Geometry Prior to Beginning of Construction of Bridge Widening.
5. Vertical Geometry Is Based on E-470 Survey of Existing Ramp B Bridge. Contractor to Verify Existing Geometry Prior to Beginning of Construction.

	INITIAL	DATE
DESIGNED BY	D.M.	3/90
CHECKED BY	C.R.	3/90
DETAILED BY	R.B.	3/90
CHECKED BY	C.R.	3/90
QUANTITIES BY	D.M.	3/90
CHECKED BY	D.M.	3/90

E-470
Engineer 470 Partnership

DIVISION OF HIGHWAYS

RAMPS B AND H OVER SE RAMP BRIDGE WIDENING

ABUTMENT #1 DETAILS

Designer	D. McDaniel	Structure Numbers	F-17-ID
Detailer	R. Bretz		
Drawing Number	B6 of 20 Drawings		

Revision Dates (Preliminary Stage Only)

QSA2:[40,144]BHAD1.90J
12-MAR-1990 20:30

STATE OF COLORADO
STATE DEPARTMENT OF HIGHWAYS
DIVISION OF HIGHWAYS
S.H. FORM NO. 126
REV. FEB. 1984

AS CONSTRUCTED						
NO REVISIONS ☐	REVISED ☐	VOID ☐	FED. ROAD REGION	DIVISION	PROJ. NO.	SHEET NO.	SHEET TOTAL
			VIII	Colorado	IA06/18#2	61	

REVISIONS		

DATE	BY	CHECKED BY	BY	CHECKED BY
5/90	D.M.			
3/90	D.M.	QUANTITIES BY	D.M.	C.R.
3/90	C.R.	CHECKED BY	C.R.	3/90

DATE	INITIAL	DESIGNED BY	CHECKED BY	DETAILED BY
3/90	D.M.	D.M.	C.R.	R.B.

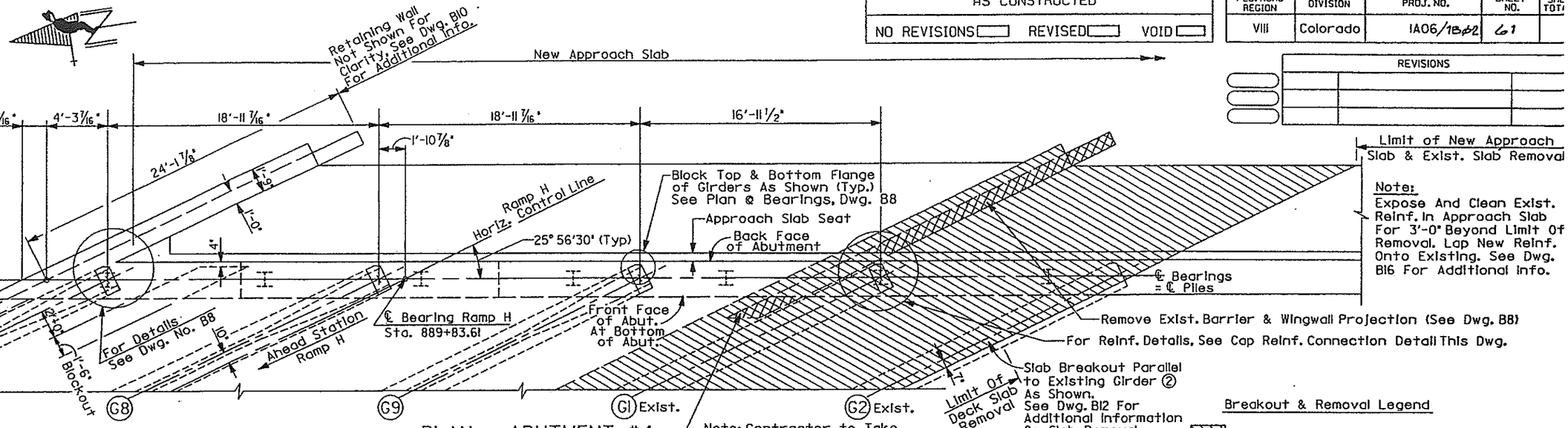

PLAN - ABUTMENT #4

Note: Projecting Portion Of Lower Portion Of Abutment Wall Not Shown For Clarity. See Section A, Dwg. B8 For Addl. Info.

Note: Contractor to Take Appropriate Precautions to not Damage Exist. Precast Girders During Removal of Exist. Deck Slab and Projecting Portion of Exist. Wingwall.

Breakout & Removal Legend

- ▨ - Limits of Deck Slab, Barrier & Approach Slab Removal
- ▩ - Limits of Full Removal

Notes:

1. For Barrier Details, See Dwg. No. B13
2. For Wingwall Details, See Dwg. No. B9
3. At Limits Of Existing Structure Removal, Saw Cut 1" Into Exposed Concrete Surfaces Prior To Removal.
4. Layout Based On Construction Layout of Existing Ramp B Bridge, Structure F-17-ID, Federal Aid Project I-25-2(153). Contractor to Verify Existing Structure Geometry Prior to Beginning of Construction of Bridge Widening.
5. Vertical Geometry Is Based on E-470 Survey of Existing Ramp B Bridge. Contractor to Verify Existing Geometry Prior to Beginning of Construction.

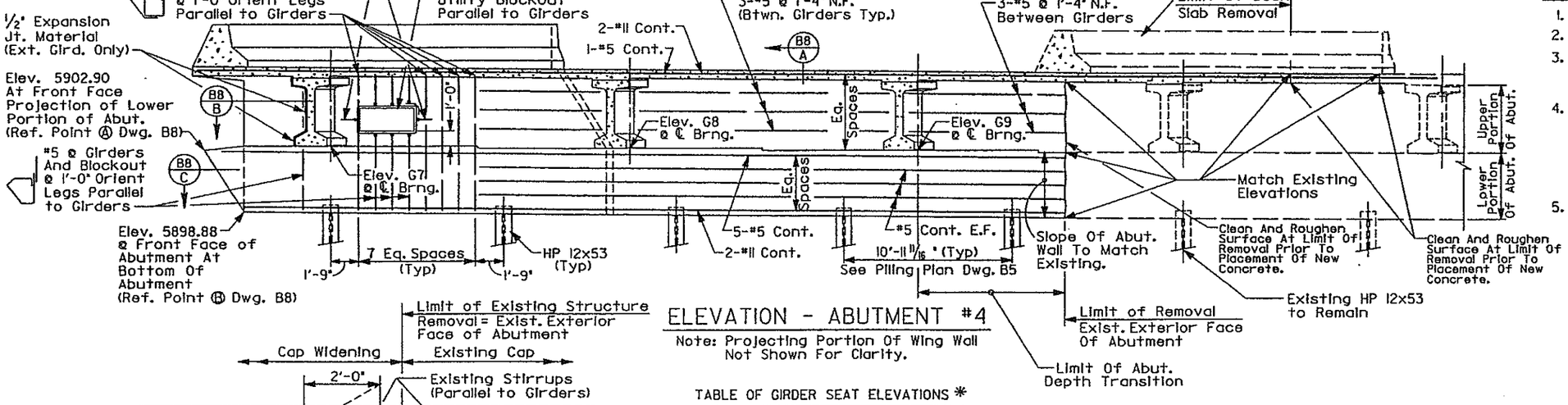

ELEVATION - ABUTMENT #4

Note: Projecting Portion Of Wing Wall Not Shown For Clarity.

TABLE OF GIRDER SEAT ELEVATIONS *

GIRDER	ELEVATION @ ℄ BEARING
G7	5903.15
G8	5903.13
G9	5903.12

*Elevations Are @ Bottom of Bearing Pad

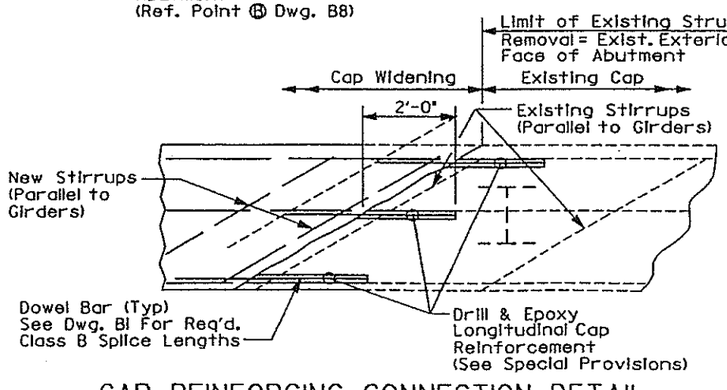

CAP REINFORCING CONNECTION DETAIL

E-470
Engineer 470 Partnership

DIVISION OF HIGHWAYS

RAMPS B AND H OVER SE RAMP BRIDGE WIDENING

ABUTMENT #4 DETAILS

Designer	D. McDaniel	Structure Numbers	F-17-ID
Detailer	R. Bretz		
Drawing Number	B7 of 20 Drawings		

Revision Dates (Preliminary Stage Only)

OSA2:[40,144]BHAD2.90J

STATE OF COLORADO
DEPARTMENT OF HIGHWAYS
DIVISION OF HIGHWAYS:
STANDARD PLAN NO. 126:
FEB. 1984

AS CONSTRUCTED
NO REVISIONS ☐ REVISED ☐ VOID ☐

FED. ROAD REGION	DIVISION	PROJ. NO.	SHEET NO.	SHEET TOTAL
VIII	Colorado	IA06/1862	62	

REVISIONS		

INITIAL	DATE	CHECKED BY
D.M.	3/90	D.M.
QUANTITIES BY		CHECKED BY
D.M.	3/90	C.R.
DESIGNED BY		CHECKED BY
D.M.	3/90	R.B.
DETAILED BY		CHECKED BY

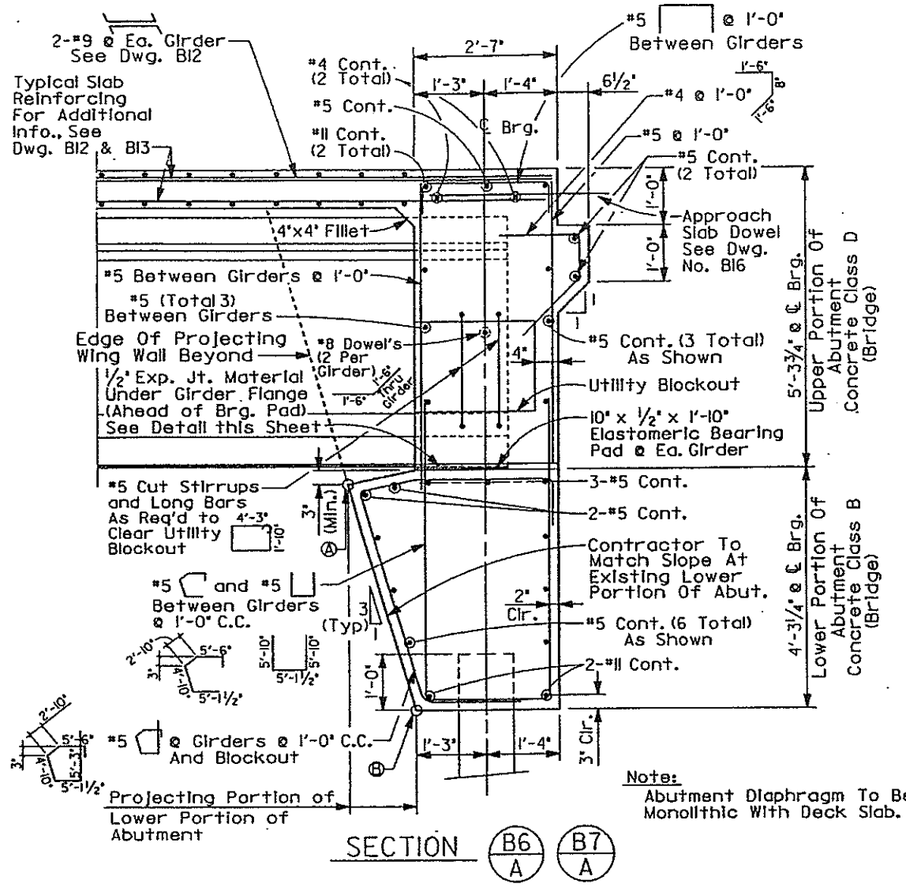

SECTION B6/A B7/A

Note:
Abutment Diaphragm To Be Poured Monolithic With Deck Slab.

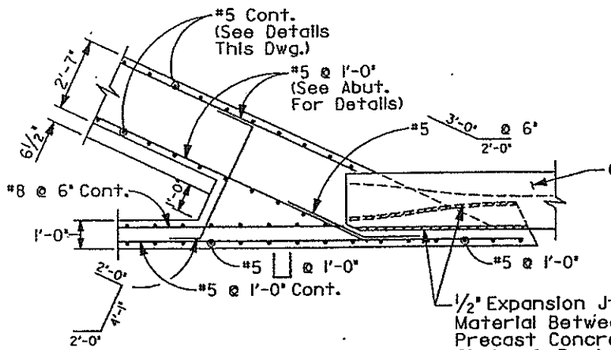

ACUTE CORNER DETAIL
Abutment 4

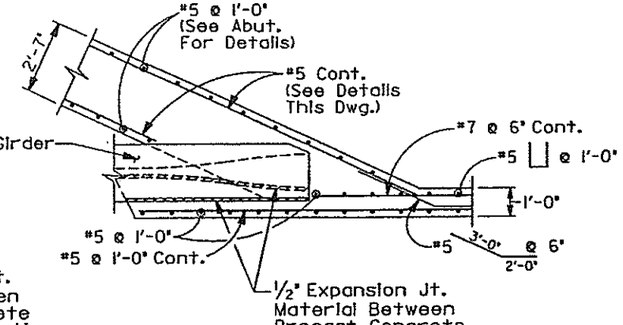

OBTUSE CORNER DETAIL
Abutment 1

SECTION B6/B B7/B

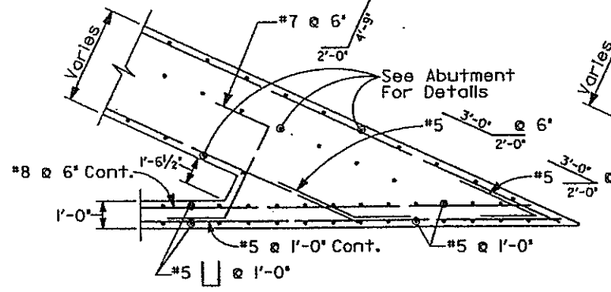

ACUTE CORNER DETAIL
Abutment 4

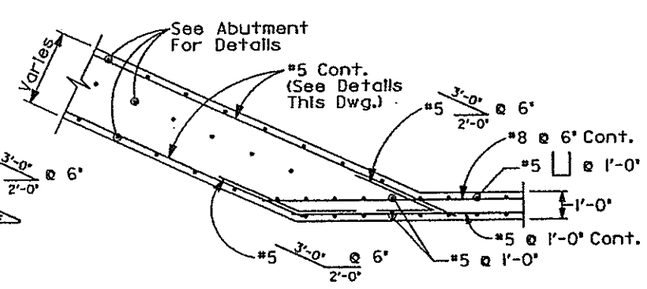

OBTUSE CORNER DETAIL
Abutment 1

SECTION B6/C B7/C

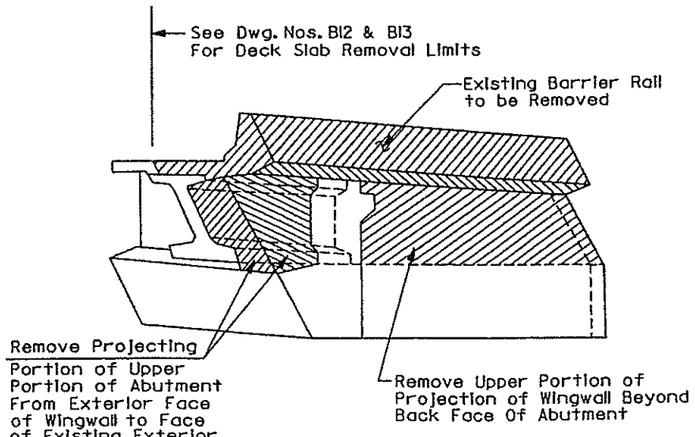

DETAIL OF REMOVAL OF EXISTING WINGWALLS

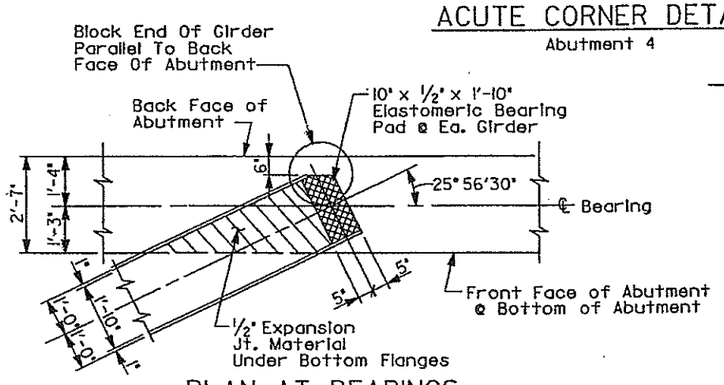

PLAN AT BEARINGS

E-470
Engineer 470 Partnership

DIVISION OF HIGHWAYS

RAMPS B AND H OVER SE RAMP BRIDGE WIDENING

ABUTMENT DETAILS

Designer	D. McDaniel	Structure Numbers	F-17-ID
Detailer	R. Bretz		
Drawing Number	B8 of 20 Drawings		

Revision Dates (Preliminary Stage Only)

OSA2:[40,144]BHAD3.90J

STATE OF COLORADO
STATE DEPARTMENT OF HIGHWAYS
DIVISION OF HIGHWAYS
S.H. FORM NO. 126
REV. FEB. 1984

AS CONSTRUCTED						
NO REVISIONS ☐	REVISED ☐	VOID ☐				
FED. ROAD REGION	DIVISION	PROJ. NO.	SHEET NO.	SHEET TOTAL		
VIII	Colorado	IA06/IB&E	63			

REVISIONS		

INITIAL	DATE
DESIGNED BY D.M.	3/90
DRAWN BY C.R.	3/90
DETAILED BY R.B.	3/90
CHECKED BY D.M.	3/90
QUANTITIES BY D.M.	3/90
CHECKED BY C.R.	3/90

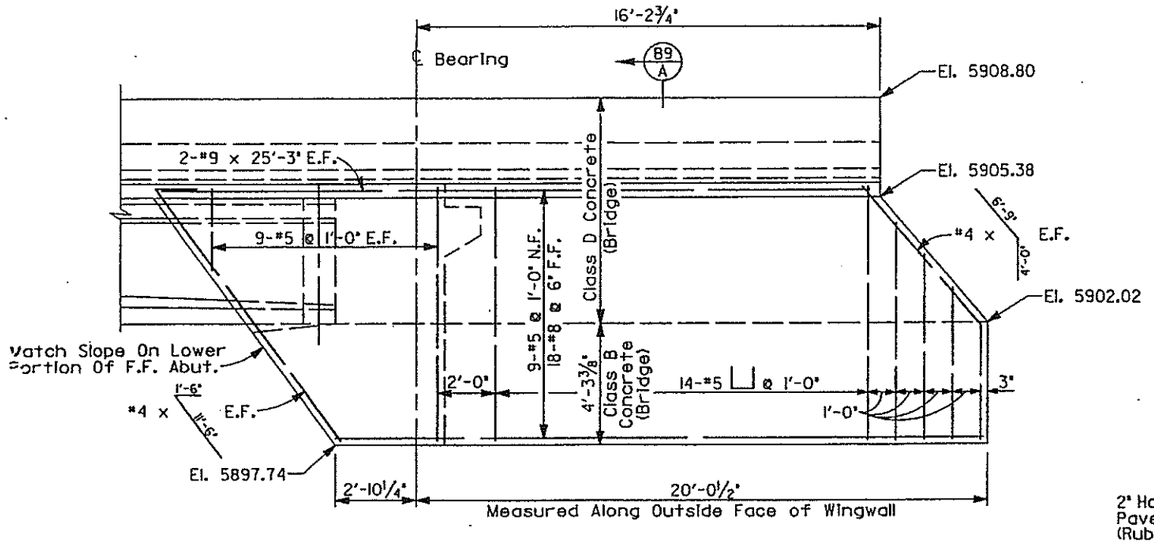

ELEVATION OF EAST WINGWALL @ ABUTMENT #1

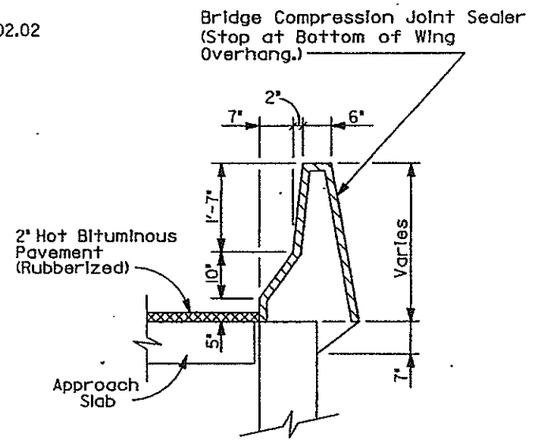

VIEW AT END OF WING WALL

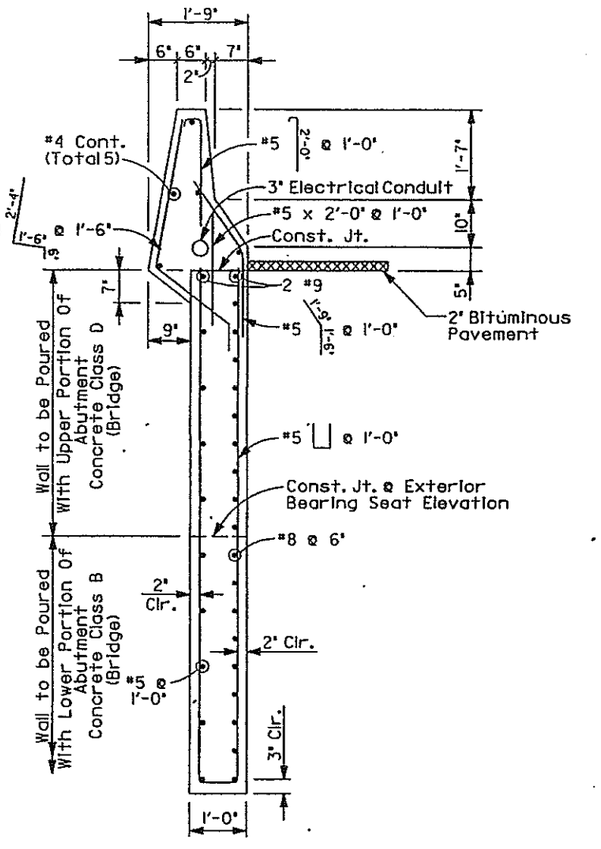

SECTION B9 A
Wing Wall Section

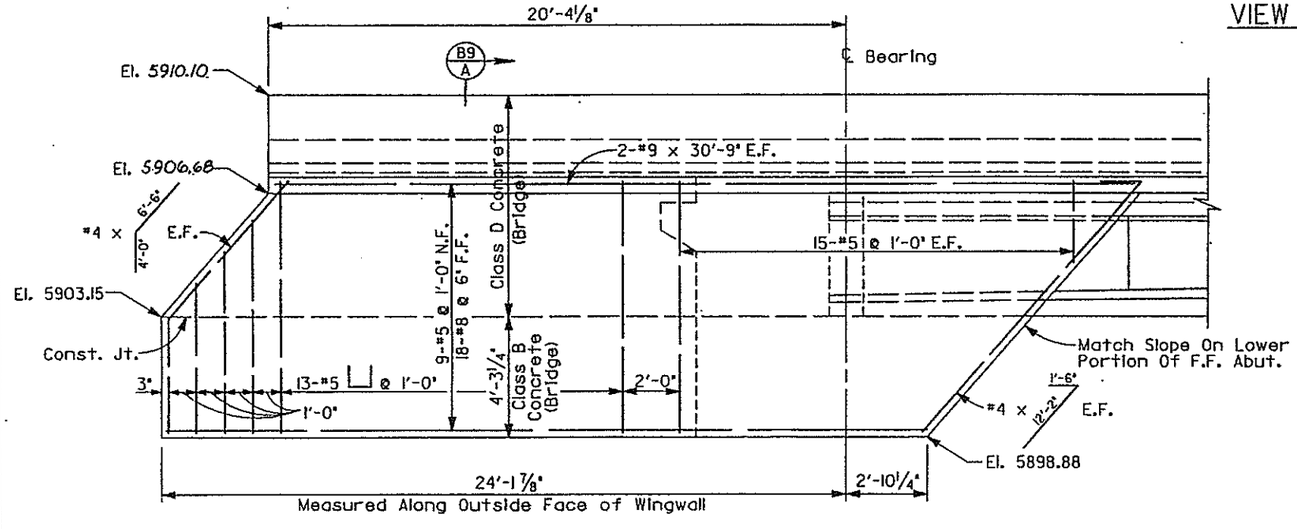

ELEVATION OF EAST WINGWALL @ ABUTMENT #4

Notes:

1. Layout Based on Construction Layout of Existing Ramp B Bridge, Structure F-17-ID, Federal Aid Project I-25-2(153). Contractor to Verify Existing Structure Geometry Prior to Beginning of Construction of Bridge Widening.
2. Vertical Geometry Is Based on E-470 Survey of Existing Ramp B Bridge. Contractor to Verify Existing Geometry Prior to Beginning of Construction.

E-470
Engineer 470 Partnership

DIVISION OF HIGHWAYS

RAMPS B AND H OVER SE RAMP BRIDGE WIDENING

WING WALL DETAILS

Designer	D. McDaniel	Structure Numbers	F-17-ID
Detailer	R. Bretz		
Drawing Number	B9 of 20 Drawings		

Revision Dates (Preliminary Stage Only)

QSA2:[40,144]BHAD4.90J

AS CONSTRUCTED					
NO REVISIONS ☐	REVISED ☐	VOID ☐			

FED. ROAD REGION	DIVISION	PROJ. NO.	SHEET NO.	SHE TOT
VIII	Colorado	IA06/1B02	64	

REVISIONS		

	INITIAL	DATE	
DESIGNED BY	D.M.	3/90	CHECKED BY
CHECKED BY	C.R.	3/90	QUANTITIES BY
DETAILED BY	R.B.	3/90	CHECKED BY

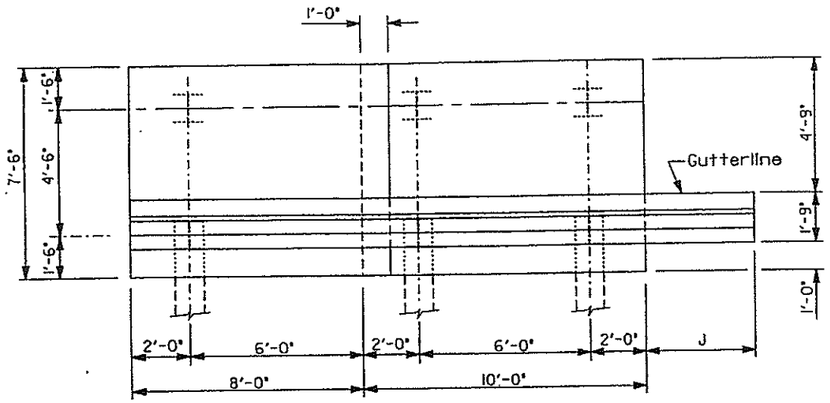

PLAN

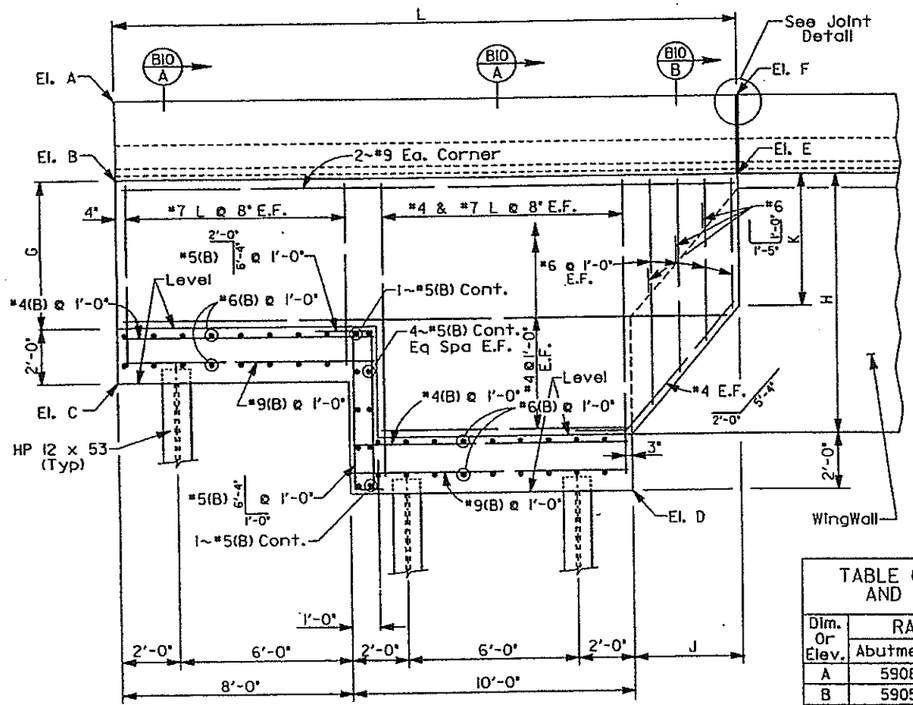

ELEVATION

Note:

1. Vertical Geometry Is Based On E-470 Survey Of Existing Ramp A Bridge. Contractor To Verify Prior To Beginning Of Construction.
2. For Piling Layout, See Dwg. B5.

TABLE OF DIMENSIONS AND ELEVATIONS

Dim. Or Elev.	RAMPS B AND H	
	Abutment #1	Abutment #4
A	5908.78	5910.30
B	5905.95	5907.46
C	5899.84	5901.27
D	5895.74	5896.88
E	5905.97	5907.26
F	5908.80	5910.10
G	4'-1 3/8"	4'-2 1/4"
H	8'-2 3/4"	8'-4 9/16"
J	3'-9 3/4"	3'-9 3/4"
K	4'-10 1/2"	4'-3 1/4"
L	21'-9 3/4"	21'-9 3/4"

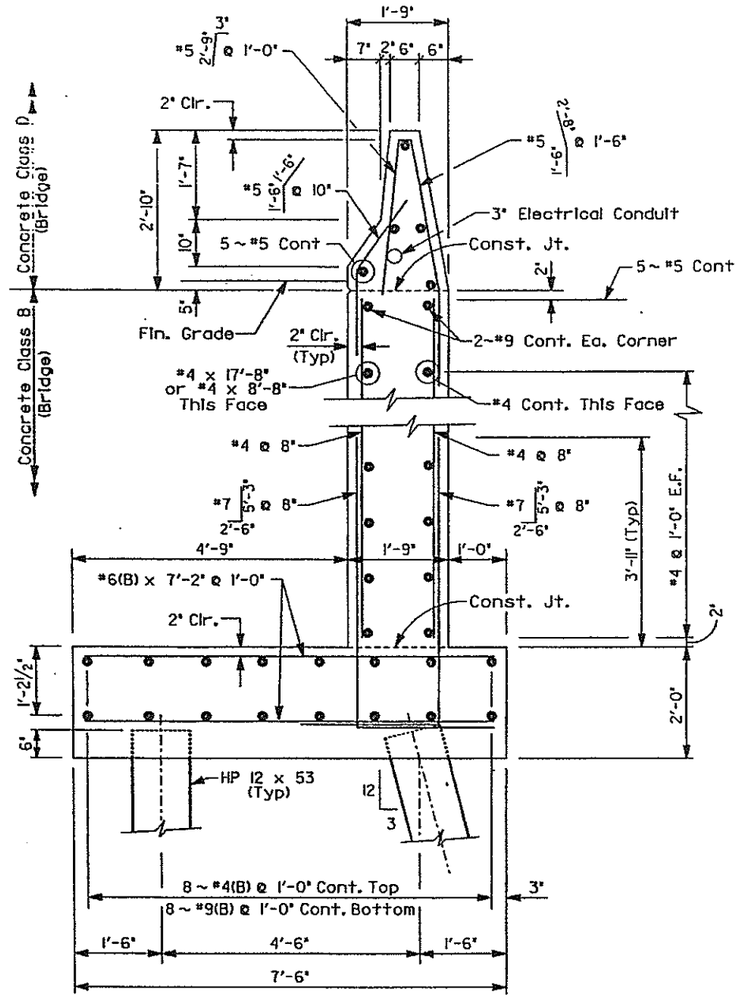

SECTION BIO A

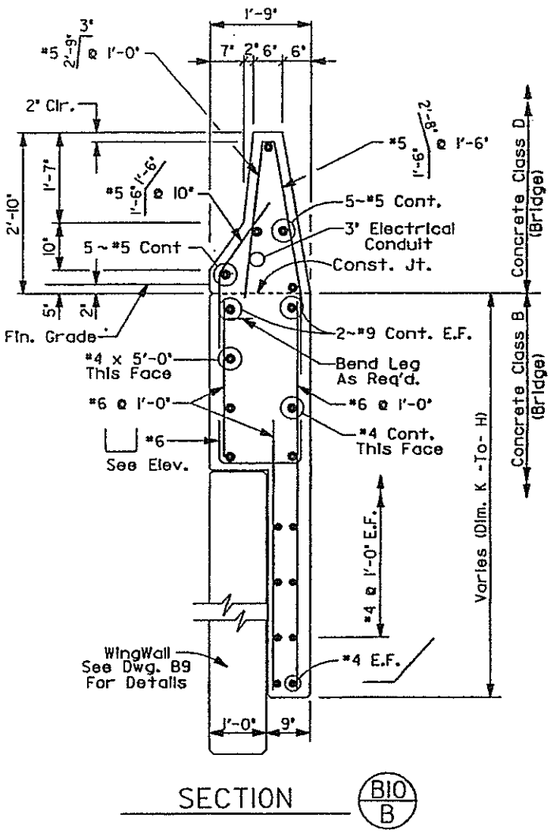

SECTION BIO B

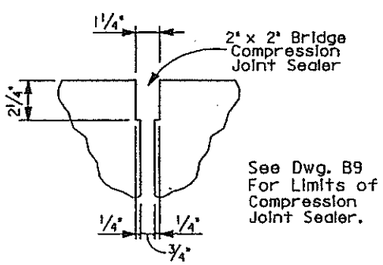

JOINT DETAIL

E-470
Engineer 470 Partnership

DIVISION OF HIGHWAYS

RAMPS B AND H OVER SE RAMP BRIDGE WIDENING

RETAINING WALL AND BRIDGE RAIL TYPE 4 (470)

Designer	D. McDaniel	Structure Number's	F-17-ID
Detailer	R. Bretz		
Drawing Number	B10 of 20 Drawings		

Revision Dates	(Preliminary Stage Only)

QSA2:[40,144]125RW01.90L

JAN 1990 2057

STATE OF COLORADO
STATE DEPARTMENT OF HIGHWAYS
DIVISION OF HIGHWAYS
D. O. H. FORM NO. 726
REV. FEB. 1984

AS CONSTRUCTED					
NO REVISIONS ☐	REVISED ☐	VOID ☐			
FED. ROAD REGION	DIVISION	PROJ. NO.	SHEET NO.	SHEET TOTAL	
VIII	Colorado	IA06/IB02	65	14	

REVISIONS			
A-1	4-2-90	REVISED REINF.	D.K.M.

*Contractor To Verify Existing Structure Dimensions Prior To Construction.

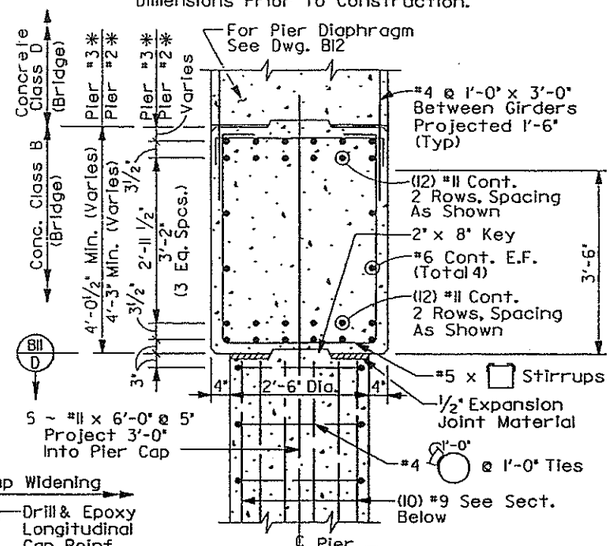

SECTION B11 A
Pier Cap

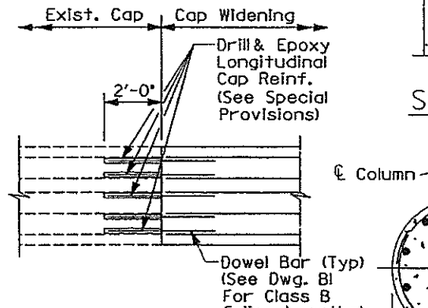

CAP REINFORCING CONNECTION DETAIL

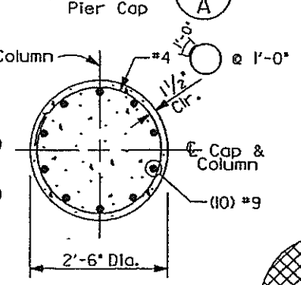

SECTION B11 B
Typical Column

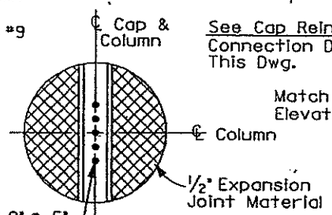

SECTION B11 D

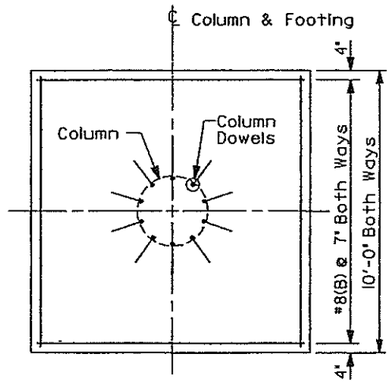

TYPICAL FOOTING PLAN

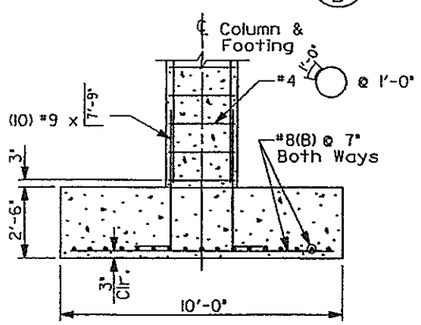

SECTION B11 C

Notes:

1. At Limits Of Existing Structure Removal, Saw Cut 1" Into Exposed Concrete Surfaces Prior To Removal.
2. Layout Based on Construction Layout of Existing Ramp B Bridge, Structure F-17-ID, Federal Aid Project I-25-2(153). Contractor to Verify Existing Structure Geometry Prior to Beginning of Construction of Bridge Widening.
3. Vertical Geometry Is Based on E-470 Survey of Existing Ramp B Bridge. Contractor to Verify Existing Geometry Prior to Beginning of Construction.

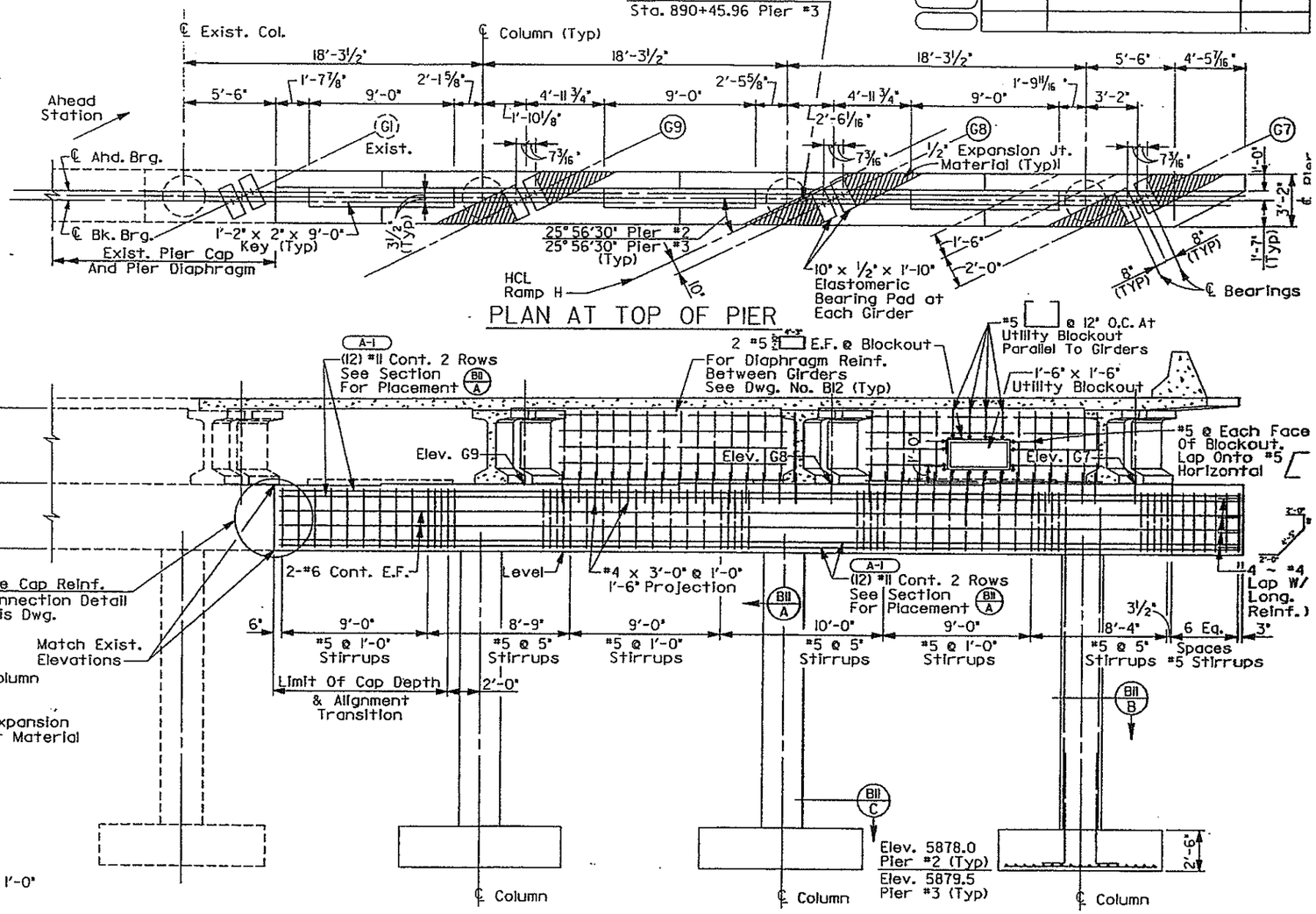

PLAN AT TOP OF PIER

SECTION
Looking Ahead-Station Ramp H

	ELEV. G7	ELEV. G8	ELEV. G9
PIER 2	5902.18	5902.08	5901.98
PIER 3	5902.68	5902.63	5902.59

E-470
Engineer 470 Partnership

DIVISION OF HIGHWAYS

RAMPS B AND H OVER SE RAMP BRIDGE WIDENING

PIERS #2 & #3

Designer	C.J. Roth	Structure Numbers	F-17-ID
Detailer	R. Bretz		
Drawing Number	B11 of 20 Drawings		

Revision Dates (Preliminary Stage Only)

QSA2:[40,144]BHPD1.90M

STATE OF COLORADO
STATE DEPARTMENT OF HIGHWAYS
DIVISION OF HIGHWAYS
S.D.H. FORM NO. 126
REV. FEB. 1984

| AS CONSTRUCTED | | |

ATE OF COLORADO
ATE DEPARTMENT OF HIGHWAYS
VISION OF HIGHWAYS:
D. NO. FORM NO. 126:
V. FEB. 1984

AS CONSTRUCTED					
NO REVISIONS ☐	REVISED ☐	VOID ☐			
FED. ROAD REGION	DIVISION	PROJ. NO.	SHEET NO.	SH TO	
VIII	Colorado	IA06/IBØ2	67		

REVISIONS		

	DATE	CHECKED BY
INITIAL	3.90	J.S.
DESIGNED BY	3/90	D.M.
CHECKED BY	3.90	QUANTITIES BY
DETAILED BY	3/90	CHECKED BY

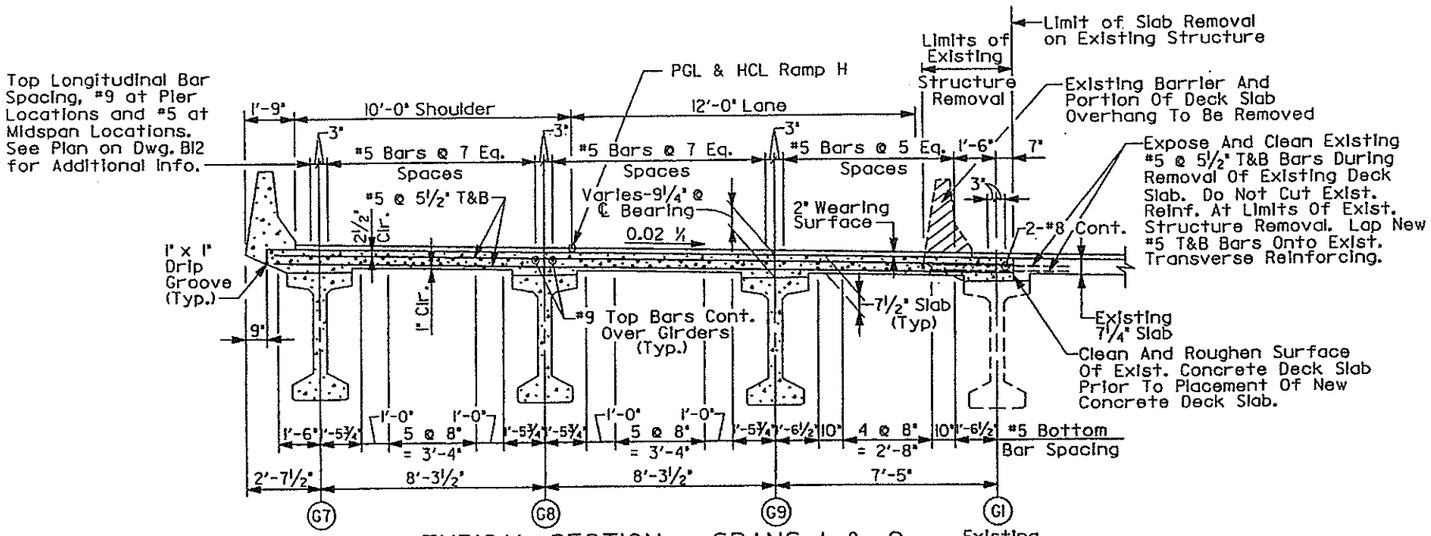

TYPICAL SECTION - SPANS 1 & 2

LOOKING BACK STATION

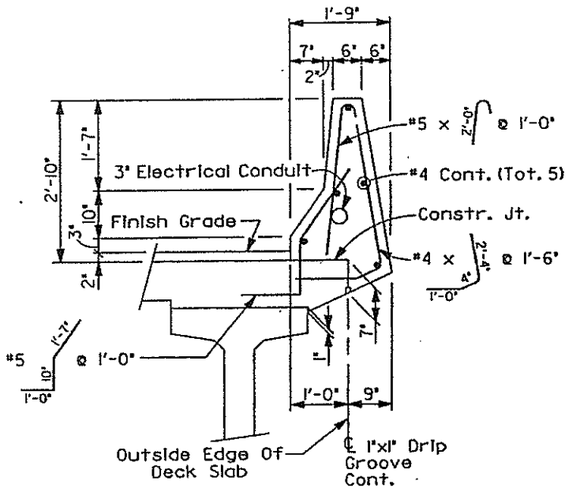

SECTION THRU BRIDGE RAIL

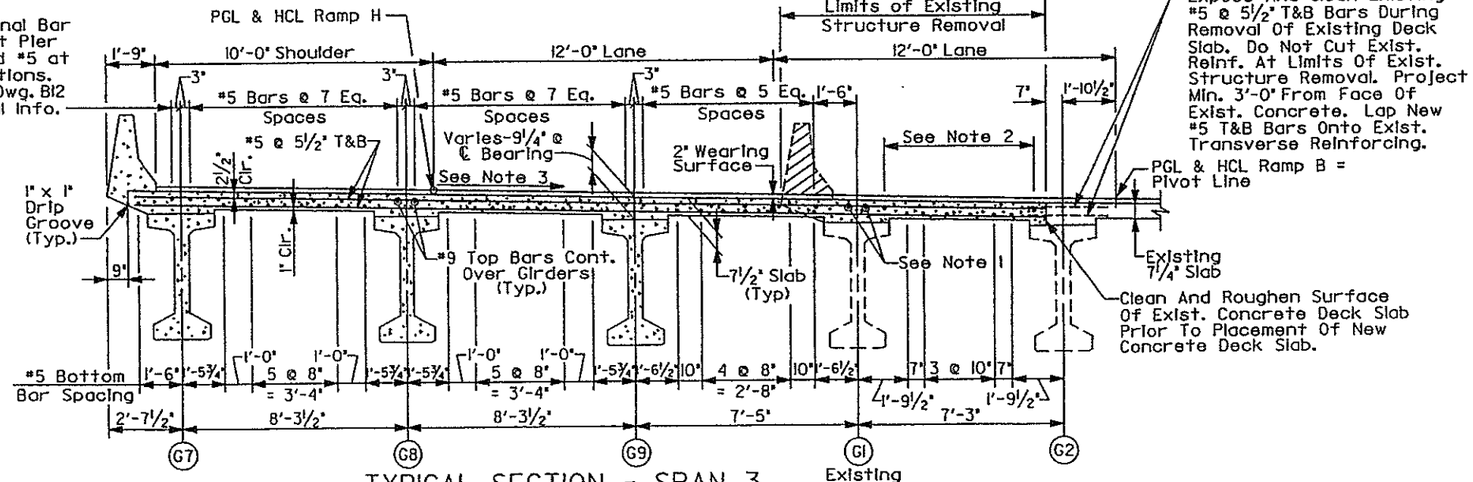

TYPICAL SECTION - SPAN 3

LOOKING BACK STATION

Notes:

1. 2 - #8 Cont. Over Girder Line G1 Lapped onto Exist. 2-#8 Projected 10'-0" Into Area of Slab Remov
2. Reinforcing Steel In This Area to Match Existing Size and Spacing. 8-#8 @ Equal Spacing at Pier 3, and 4-#5 @ Equal Spacing at Midspan of Span 3. See Dwg. B12 For Additional Information.
3. Cross Slope on Deck Varies In Span 3. See Profile Dwg. For Ramp H For Additional Information.
4. Layout Based on Construction Layout of Existing Ramp B Bridge, Structure F-17-ID, Federal Aid Project I-25-2(153). Contractor to Verify Existing Structure Geometry Prior to Beginning of Construction of Bridge Widening.
5. Vertical Geometry Is Based on E-470 Survey of Existing Ramp B Bridge. Contractor to Verify Existing Geometry Prior to Beginning of Construction.

E-470
Engineer 470 Partnership

DIVISION OF HIGHWAYS

RAMPS B AND H OVER SE RAMP
BRIDGE WIDENING

SUPERSTRUCTURE
DETAILS #2

Designer	J. Showers	Structure Numbers	F-17-ID
Detailer	R. Bretz		
Drawing Number	B13 of 20 Drawing		

Revision Dates (Preliminary Stage Only)							

OSA2:[40,144]BHSSD2.90N

ATE OF COLORADO
ATE DEPARTMENT OF HIGHWAYS
VISION OF HIGHWAYS
M. FORM NO. 126
Y. FEB. 1984

STANDARD EB-618-54

AS CONSTRUCTED			
NO REVISIONS ☐	REVISED ☐	VOID ☐	

FED. ROAD REGION	DIVISION	PROJ. NO.	SHEET NO.	SHEET TOTAL
VIII	Colorado	IA06/IBØ2	68	

REVISIONS		

INITIAL	DATE	CHECKED BY
JLS	8-89	
LRC	8-89	
DGB	8-89	QUANTITIES BY
MJD	9-89	CHECKED BY

DESIGNED BY
CHECKED BY
DETAILED BY

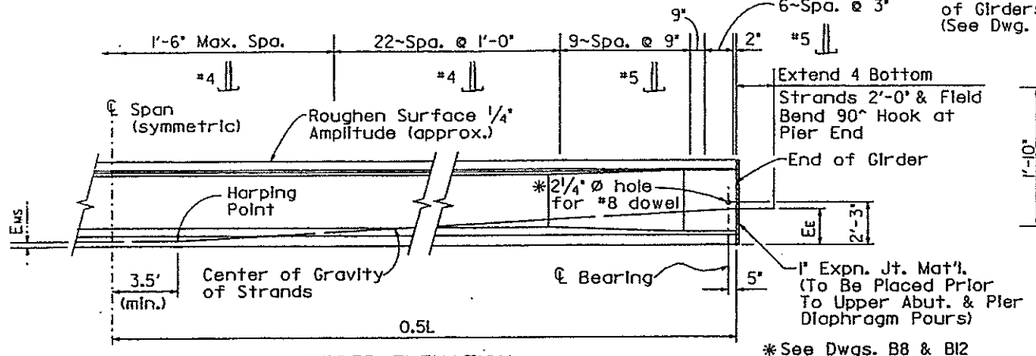

GIRDER ELEVATION

*See Dwgs. B8 & B12 for Locations for #8 Dowel.

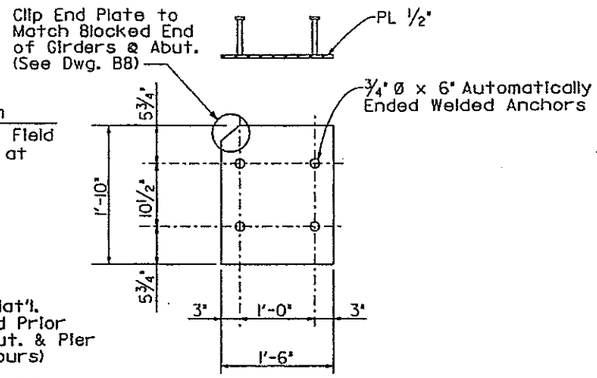

END PLATE DETAIL
Galvanize after Fabrication.

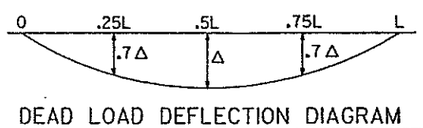

DEAD LOAD DEFLECTION DIAMGRAM

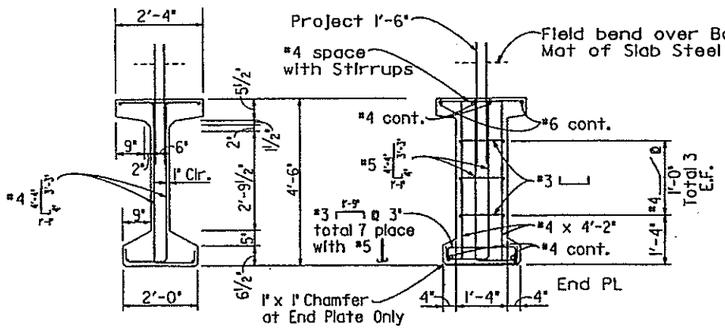

THROUGH MID SPAN THROUGH END PLATE

TYPICAL GIRDER SECTIONS

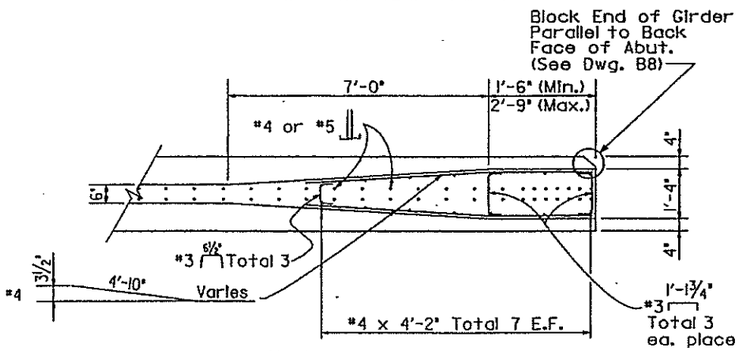

SECTION THRU END BLOCK

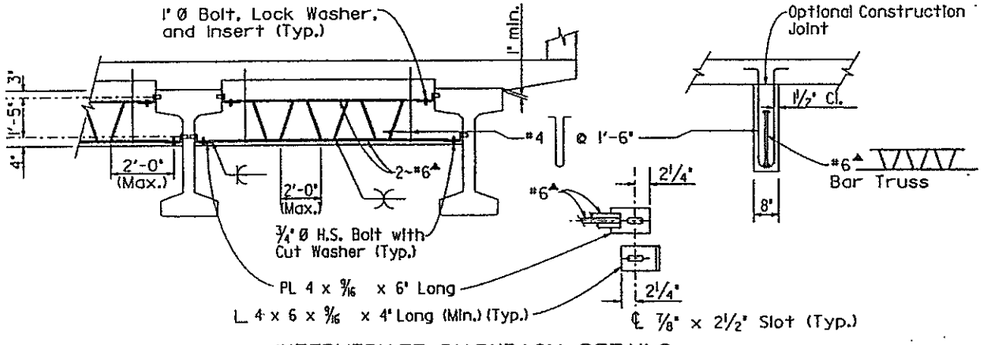

INTERMEDIATE DIAPHRAGM DETAILS
For Location of Diaphragm, see Construction Layout

▲#6 bar shall be ASTM A706 or 3/4" Ø A36

GIRDER SCHEDULE

Span No.	Girder No.	L (Feet)	As (Square Inch)	E_{MS} (Inch)	E_E (Inch)	F_I (KIPS)	F_F (KIPS)	Concrete Strength f_{ci} (PSI)	Concrete Strength f_c (PSI)	Δ (Inch)	Expected Camber (Inch)
1	7	62.52	2.45	2.96	16.93	496	409	4,500	5,000	0.274	0.841
1	8	62.52	2.45	2.96	16.93	496	410	4,500	5,000	0.322	0.817
1	9	62.52	2.45	2.96	16.93	496	410	4,500	5,000	0.322	0.817
2	7	98.50	6.12	3.17	20.61	1,240	875	6,500	7,000	1.880	3.650
2	8	98.50	6.12	3.17	20.61	1,240	879	6,500	7,000	1.770	3.650
2	9	98.50	6.12	3.17	20.61	1,240	879	6,500	7,000	1.770	3.650
3	7	62.52	2.45	2.96	16.93	496	409	4,500	5,000	0.274	0.841
3	8	62.52	2.45	2.96	16.93	496	410	4,500	5,000	0.322	0.817
3	9	62.52	2.45	2.96	16.93	496	410	4,500	5,000	0.322	0.817

NOTES

All work necessary to fabricate and install the integral parts of the girder (including #6 Bar Truss and elastomeric leveling and bearing pads) as shown on the plans shall be included in the bid price for Item No. 618, Prestressed Concrete Unit.

When approved by the Engineer, a minimum of tack welding will be permitted on ASTM A706 uncoated reinforcing steel.

Reinforcing projecting from the top of the girder and reinforcing within eight feet of an expansion device in the bridge deck shall be epoxy coated. Damaged coating on girder reinforcing need not be repaired.

At girder ends not embedded in concrete diaphragms, cut strands off 1" below the surface of the concrete and finish with an approved epoxy grout. At girder ends embedded in concrete diaphragms, cut strands to project 3". Do not make cosmetic repairs (damage less than 1 1/2" deep) to the parts of the girders embedded in concrete.

Use 1/2" Ø fs=270 KSI low relaxation strands meeting the requirements of ASTM A416 Grade 270. Alternate strands are 1/2" Ø stress relieved strands meeting the requirements of ASTM A416 Grade 270. If stress relieved strands are used, the jacking force and initial concrete strengths shall be adjusted as appropriate to provide the final force (Ff) shown. The fabricator shall include design calculations with the shop plans.

The minimum distance between groups or individual strands shall be 1 3/4" (measured between centers of adjacent strands). The minimum cover for prestressing steel is 1 1/2".

A minimum of two harping points shall be used per girder.

As Is the minimum area of the prestressing steel.

fs Is the ultimate strength of the prestressing steel.

FI Is the jacking force per girder including all losses.

Ff Is the final force per girder after all losses

fci Is the required concrete strength at release of prestress force.

fc Is the required concrete strength at 28 days of age.

Δ Is the deflection at centerline of span due to cast-in-place slab, diaphragms, asphalt, curbs, rails, and walks.

Concrete shall be Class S.

Entrained air is not required for girder concrete.

End Blocks shall be used on all girders unless otherwise noted.

Use 1/2" chamfer on all corners, except as noted.

Expected camber is projected to 90 days girder age. If girders, deck, forms, and reinforcing will not be placed before that girder age, weights, temporary tensioning, or other means approved by the Engineer shall be used to limit camber growth. Prior to deck pour, measure and report E-470 Project Engineer to cambers exceeding the expected camber by more than 1 1/2" because the anticipated haunch may not exist and the girder flange may interfere with the deck reinforcement.

Use and installation of the #6 Bar Truss shall not relieve the Contractor of its full responsibility to construct the work in a manner which provides all necessary rigidity, supports all loads imposed, and provides in the finished structure the lines and grades indicated on the plans.

No girders shall be erected and left unbraced. The #6 Bar Truss shall be connected to the adjacent girders simultaneously with the erection of the girders.

For girders passing over traffic, the #6 Bar Truss shall be connected to the girders prior to the release of the erection equipment.

The Contractor is responsible for determining necessary bracing requirements, and for providing adequate bracing for the specific wind and weather conditions to be encountered for each specific project.

The Contractor shall field verify C.C. bearing distances prior to girder fabrication. See special provisions for additional information.

DIVISION OF HIGHWAYS

RAMPS B AND H OVER SE RAMP BRIDGE WIDENING

COLORADO G54 GIRDER

E-470
Engineer 470 Partnership

Designer	J. Showers	Structure Numbers	F-17-10
Detailer	R. Bretz		
Drawing Number	B14	of 20	Drawings

Revision Dates (Preliminary Stage Only)

STANDARD EB-618-54

UDA2:[200,20]YOSG54B.90N

ATE OF COLORADO
ATE DEPARTMENT OF HIGHWAYS
VISION OF HIGHWAYS:
C.H. FORM NO. 126:
Y. FEB. 1984

AS CONSTRUCTED			FED. ROAD REGION	DIVISION	PROJ. NO.	SHEET NO.	SHE TOT
NO REVISIONS ☐	REVISED ☐	VOID ☐	VIII	Colorado	IA06/1B02	69	

REVISIONS

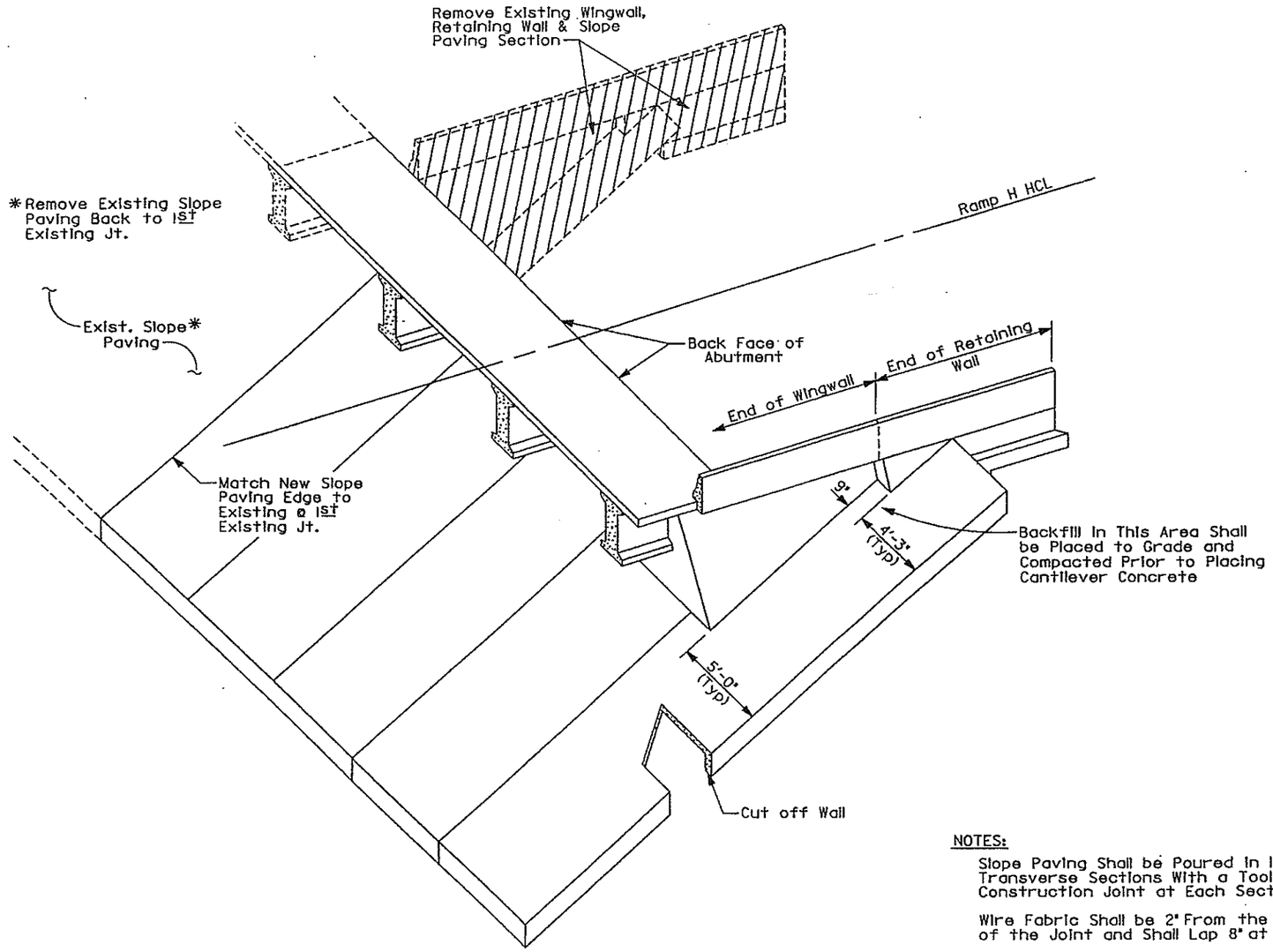

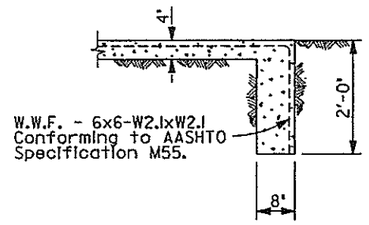

SECTION THRU CUT-OFF WALL

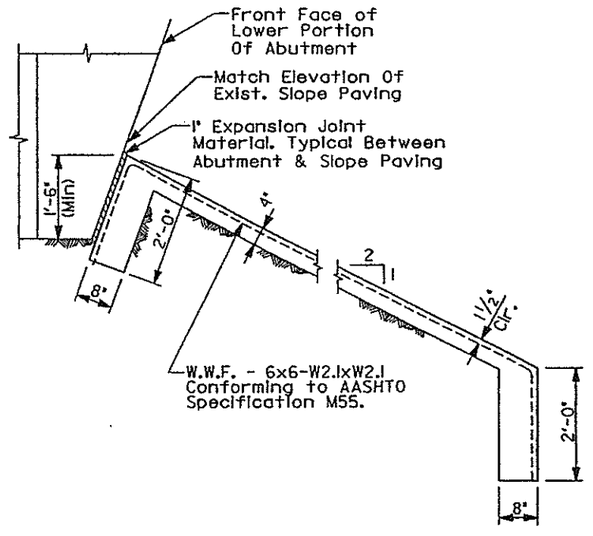

SECTION THRU SLOPE PAVING

NOTES:

Slope Paving Shall be Poured in 10 Ft. Transverse Sections With a Tooled Construction Joint at Each Section.

Wire Fabric Shall be 2" From the End of the Joint and Shall Lap 8" at Splices.

Where Slope Paving Butts Against Structural Concrete, Separate with 1" Exp. Jt. Material.

Expansion Joint Material and Welded Wire Fabric Shall Not be Paid For Separately, but Shall be Included in Item 507.

The Surface of Finished Slope Paving Shall Receive A Class 3, Float Finish of Uniform Appearence Free of Float Marks and Smoothly Troweled Construction Joints.

Structural Excavation For Slope and Ditch Paving Shall Be Limited To The Actual Volume Occupied By The Slope Paving Concrete.

See General Layout For Limits of Slope Paving

	INITIAL	DATE			
DESIGNED BY	J.S.	3/90	CHECKED BY	J.S.	3/90
CHECKED BY	D.M.	3/90	QUANTITIES BY	D.M.	3/90
DETAILED BY	R.B.	3/90	CHECKED BY	C.R.	3/90
				D.M.	3/90

E-470
Engineer 470 Partnership

DIVISION OF HIGHWAYS

RAMPS B AND H OVER SE RAMP BRIDGE WIDENING

SLOPE PAVING DETAILS

Designer	J. Showers	Structure Numbers	F-17-10
Detailer	R. Bretz		
Drawing Number	B15	of 20	Drawings

Revision Dates (Preliminary Stage Only)

QSA2:[40,144]BHSPD1.90N

GENERAL NOTES:

ALL WORK SHALL BE DONE ACCORDING TO THE STANDARD SPECIFICATIONS OF THE DIVISION OF HIGHWAYS, STATE OF COLORADO, APPLICABLE TO THE PROJECT.

CLASS 1 FINISH, FOLLOWED BY APPLICATION OF A COLORED ACRYLIC COATING, WILL BE REQUIRED ON ALL EXPOSED CONCRETE SURFACES DOWN TO 1'-0" BELOW GROUND LINE. REQUIREMENTS FOR COATING ARE GIVEN IN REVISION OF SECTION 601, STRUCTURAL CONCRETE (COATING). COLOR TO BE DETERMINED BY ENGINEER.

EXPANSION JOINT MATERIAL SHALL MEET AASHTO SPECIFICATION M-213.

STRUCTURE EXCAVATION AND BACKFILL SHALL BE IN ACCORDANCE WITH STANDARD M-206-2, EXCEPT AS NOTED. ADEQUATE SHORING OF THE EXCAVATION ADJACENT TO THE ROADWAYS SHALL BE PROVIDED DURING ALL PHASES OF CONSTRUCTION. METHOD OF SHORING SHALL BE APPROVED BY THE ENGINEER.

ALL STRUCTURAL STEEL SHALL BE AASHTO M-183 (ASTM A-36).

GRADE 60 REINFORCING STEEL IS REQUIRED FOR #4 BARS AND LARGER. ALL REINFORCING STEEL SHALL BE EPOXY COATED UNLESS OTHERWISE NOTED.

THE FOLLOWING TABLE GIVES THE MINIMUM CLASS B LAP SPLICE FOR EPOXY COATED REINFORCING BARS :

BAR SIZE	#4	#5	#6	#7	#8	#9	#10	#11
SPLICE LENGTH FOR CLASS B CONCRETE	1'-3"	1'-6"	2'-0"	2'-8"	3'-6"	4'-5"	5'-7"	6'-10"
SPLICE LENGTH FOR CLASS D CONCRETE	1'-3"	1'-6"	1'-10"	2'-2"	2'-10"	3'-7"	4'-7"	5'-7"

THE LENGTHS SHALL BE INCREASED BY 20 PERCENT FOR 3-BAR BUNDLES AND 33 PERCENT FOR 4-BAR BUNDLES.

ANY REINFORCING STEEL SPLICES NOT SHOWN SHALL BE APPROVED BY THE ENGINEER.

THE CONTRACTOR SHALL BE RESPONSIBLE FOR THE STABILITY OF THE STRUCTURE DURING CONSTRUCTION.

THE INFORMATION SHOWN ON THESE DRAWINGS CONCERNING TYPE AND LOCATION OF UNDERGROUND UTILITIES IS NOT GUARANTEED TO BE ACCURATE OR ALL INCLUSIVE. THE CONTRACTOR IS RESPONSIBLE FOR MAKING HIS OWN DETERMINATION AS TO THE TYPE AND LOCATION OR UNDERGROUND UTILITIES AS MAY BE NECESSARY TO AVOID DAMAGE THERETO.

ABBREVIATIONS :

E.W.	= EACH WAY	J	= JUNCTION BOX
E.F.	= EACH FACE	H.C.L.	= HORIZONTAL CONTROL LINE
F.F.	= FAR FACE	H.B.P.	= HOT BITUMINOUS PAVEMENT
N.F.	= NEAR FACE	CONT.	= CONTINUOUS
(SB)	= SOUTHBOUND	(B)	= BLACK REINFORCING BAR (EPOXY COATED REINFORCING BAR MAY BE PROVIDED AT NO ADDITIONAL COST TO THE PROJECT).
(NB)	= NORTHBOUND		
Spc., Sp.	= SPACES	E.J.M.	= EXPANSION JOINT MATERIAL

ALL EXTERIOR CONCRETE CORNERS SHALL BE CONSTRUCTED WITH ¾" CHAMFERS, UNLESS OTHERWISE NOTED.

PERMANENT STEEL BRIDGE DECK FORMS SHALL BE USED FOR ALL INTERIOR SLAB SPANS AS SHOWN IN THE TYPICAL SECTIONS. NO STEEL BRIDGE DECK FORMS WILL BE ALLOWED ON THE CANTILEVER PORTIONS OF THE SLAB, AND IMMEDIATELY ADJACENT TO THE DECK DRAINS.

ALL ANCHOR BOLTS SHALL BE 1¼" DIAMETER, A325 HIGH STRENGTH, UNLESS NOTED.

DESIGN DATA

CURRENT AASHTO SPECIFICATIONS :

LIVE LOAD : HS-20-44 AND INTERSTATE ALTERNATE
DEAD LOAD : ASSUMES 48 LBS PER SQ. FT. FOR BITUMINOUS PAVEMENT
: ASSUMES 12 LBS PER SQ. FT. FOR IN-PLACE FORMWORK

REINFORCED CONCRETE :
CLASS B CONCRETE : F'c = 3,000 psi AT 28 DAYS ; fc = 1,200 psi, n = 9
CLASS D CONCRETE : F'c = 4,500 psi AT 28 DAYS ; fc = 1,800 psi, n = 8

REINFORCING STEEL : #4 BARS AND LARGER : Fy = 60,000 psi, Fs = 24,000 psi

STRUCTURAL STEEL : AASHTO M-183 (ASTM A-36) Fy = 36,000 psi, Fs = 20,000 psi

PRESTRESSED CONCRETE : f's = 270,000 psi, f'c = (SEE DETAILS)

DESIGN METHODS

ABUTMENT, CAPS, I-GIRDERS & SLAB : SERVICE LOAD DESIGN
PIER COLUMNS, ABUTMENT & PIER CAISSONS: LOAD FACTOR DESIGN.

INITIAL	DATE	
AEG	7-89	Designed By
JHP	8-89	Checked By
JHP	7-89	Quantities By
GMC	7-89	Detailed By
AEG	9-89	Checked By
JHP	9-89	Quantities By
JHP	9-89	Checked By
GMT	9-89	

SY24:: 05A3:1174.1741SIGS00121.90A

SUMMARY OF QUANTITIES

ITEM	DESCRIPTION	UNIT	Structure NO. F-17-JU (Southbound) SUPER-STRUCTURE	ABUT. #1	PIER #2	ABUT. #3	TOTAL	Structure NO. F-17-JV (Northbound) SUPER-STRUCTURE	ABUT. #1	PIER #2	ABUT. #3	TOTAL	TOTALS
206	STRUCTURE EXCAVATION	CU.YDS.		980	30	1625	2635		970	35	1625	2630	5265
206	STRUCTURE BACKFILL (CLASS 1)	CU.YDS.		660		1030	1690		665		925	1640	3330
206	STRUCTURE BACKFILL (CLASS 2)	CU.YDS.			15		15			20		20	35
403	HOT BITUMINOUS PAVEMENT (GRADE E) (HAUL AND ASPHALT)	TON	138	13		13	164	131	13		12	156	320
503	DRILLED CAISSON (24 INCH)	LIN.FT.		612		192	804		560		192	752	1556
503	DRILLED CAISSON (30 INCH)	LIN.FT.				330	330				300	300	630
503	DRILLED CAISSON (60 INCH)	LIN.FT.			88		88			88		88	176
512	BEARING DEVICE (TYPE II)	EACH		8		8	16		8		8	16	32
513	BRIDGE DRAIN (8-INCH)	EACH	1				1	1				1	2
515	WATERPROOFING (MEMBRANE)	SQ. YD.	1299	123		118	1540	1242	122		108	1472	3012
518	BRIDGE COMPRESSION JOINT SEALER	LIN.FT.	155	9		9	173	155	9		9	173	346
518	WATERSTOP (6 INCH)	LIN.FT.		13		20	33		13		21	34	67
601	CONCRETE, CLASS B (BRIDGE)	CU.YDS.		262.5	147.0	410.5	820		264.3	146.0	388.7	799	1619
(1) 601	CONCRETE, CLASS D (BRIDGE)	CU.YDS.	446.0	54.5		52.5	553	427.0	54.1		47.9	529	1082
601	CONCRETE (ARCHITECTURAL TREATMENT TYPE 1)	SQ. YD.		141		180	321		142		197	339	660
601	CONCRETE (ARCHITECTURAL TREATMENT TYPE 2)	SQ. YD.		9		31	40		9		0	9	49
602	REINFORCING STEEL	LBS.		16,820		20,865	37,685		16,605		20,620	37,225	74,910
(2) 602	REINFORCING STEEL (EPOXY-COATED)	LBS.	131,025	40,640	26,080	64,020	261,765	125,680	40,050	25,770	59,280	250,780	512,545
605	6 INCH PERFORATED PLASTIC PIPE (POLYVINYL CHLORIDE)	LIN.FT.		96		91	187		96		85	181	368
605	6 INCH PLASTIC PIPE (POLYVINYL CHLORIDE)	LIN.FT.		20		20	40		20		20	40	80
605	MOLDED PLASTIC SHEET DRAIN	SQ. FT.		1769		2263	4032		1781		2104	3885	7917
606	BRIDGE RAIL TYPE 4 (SPECIAL)	LIN.FT.	159	9		9	177	159	9		9	177	354
606	BRIDGE RAIL TYPE 4 (470)	LIN.FT.	160	41		55	256	157	40		56	253	509
613	¾ INCH ELECTRICAL CONDUIT	LIN.FT.	26		60		86	26		60		86	172
613	2 INCH ELECTRICAL CONDUIT	LIN.FT.	515	54		68	637	508	53		69	630	1267
618	PRESTRESSED CONCRETE UNIT (I-SECTION) (75-80 FEET)	EACH	16				16	16				16	32

(1) INCLUDES 209 CU. YDS. FOR APPROACH SLAB.
(2) INCLUDES 27,095 LBS. FOR APPROACH SLAB.

Cross Reference Drawing Number
B-
Section or Detail Identification

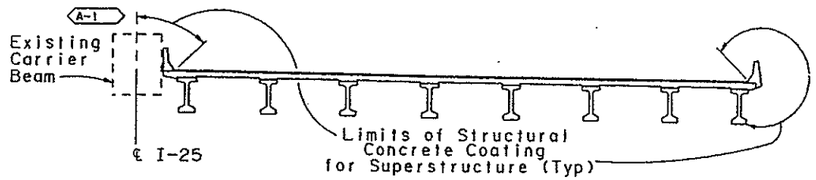

SUPERSTRUCTURE CONCRETE COATING FINISH DIAGRAM

AS CONSTRUCTED					
NO REVISIONS		REVISED		VOID	

FEDERAL ROAD REGION NO.	DIVISION	PROJECT NUMBER	SHEET NUMBER
VIII	COLORADO	1A02	20

REVISIONS			
A-1	10- 5-89	BID ITEMS, QUANTITIES & NOTES	AEG
	- -		
	- -		

INDEX OF DRAWINGS

DWG. No.	DESCRIPTION
B-1	GENERAL INFORMATION AND SUMMARY OF QUANTITIES
B-2	GENERAL LAYOUT
B-3	ENGINEERING GEOLOGY
B-4	CONSTRUCTION LAYOUT
B-5	CAISSON LAYOUT (SOUTHBOUND)
B-6	CAISSON LAYOUT (NORTHBOUND)
B-7	CAISSON DETAILS
B-8	ABUTMENT #1 AND WINGWALL PLAN AND ELEVATION
B-9	ABUTMENT #3 AND WINGWALL PLAN AND ELEVATION
B-10	ABUTMENT TYPICAL SECTIONS
B-11	ABUTMENT DETAILS MISCELLANEOUS
B-12	ABUTMENT #1 WINGWALL ELEVATIONS AND DETAILS
B-13	ABUTMENT #3 WINGWALL ELEVATIONS AND DETAILS
B-14	WINGWALL TYPICAL SECTIONS
B-15	PIER #2 PLAN AND ELEVATION (SOUTHBOUND)
B-16	PIER #2 PLAN AND ELEVATION (NORTHBOUND)
B-17	PIER #2 SECTION AND DETAILS
B-18	DECK REINFORCEMENT AND BRIDGE RAIL DETAILS
B-19	DECK REINFORCEMENT DETAILS
B-20	ABUTMENT DIAPHRAGM DETAILS
B-21	ABUTMENT #1 CARRIER BEAM WINGWALL
B-22	ABUTMENT #3 CARRIER BEAM WINGWALL
B-23	PIER DIAPHRAGM DETAILS
B-24	DECK DRAIN DETAILS
B-25	DECK DRAIN DETAILS
B-26	COLORADO G54 GIRDER
B-27	BEARING DEVICE (TYPE II)
B-28	APPROACH SLAB DETAILS
B-29	BRIDGE DECK ELEVATIONS
B-30	BRIDGE DECK ELEVATIONS
B-31	ROADWAY APPROACHES

BRIDGE DESCRIPTION

TWO TAPERED, 2-SPAN (76'-6",76'-6") I-25 BRIDGES.
CONCRETE PRESTRESSED CONTINUOUS I-GIRDER OVER SH 470/E-470.
SOUTHBOUND, CURB-TO-CURB VARIES FROM 76'-11¼" TO 73'-9½" AT ℄ BEARINGS ABUTMENTS
NORTHBOUND, CURB-TO-CURB VARIES FROM 76'-6" TO 67'-8¼" AT ℄ BEARINGS ABUTMENTS
SKEW ANGLE: 78°34'37"
1'-3" CONCRETE BRIDGE RAIL TYPE 4 (SPECIAL), MEDIAN,
1'-9" CONCRETE BRIDGE RAIL TYPE 4 (470), OUTSIDE.

E-470
Engineer 470 Partnership

DIVISION OF HIGHWAYS

I-25 OVER SH 470/E-470
GENERAL INFORMATION
SUMMARY OF QUANTITIES
STA. 583+31.01 TO 584+91.15
T.6.S., S.3, R.67 W. NEAR DENVER

Designer A. Griffith		Structure Numbers	F-17-JU
Detailer G.Christnacht			F-17-JV
Drawing Number B-1	of 31	Drawings	

SUMMARY OF QUANTITIES/GEN'L INFO.
SIGS00121.90A

AS CONSTRUCTED					
NO REVISIONS		REVISED		VOID	

FEDERAL ROAD REGION NO.	DIVISION	PROJECT NUMBER	SHEET NUMBER
VIII	COLORADO	1A02	21

REVISIONS			
A-1	10-5-89	DIMENSIONS	AEG
	- -		
	- -		

INITIAL	DATE		
AEG	7-25-89	Checked By	AEG 9-89
JHP	7-25-89	Quantities By	JHP 9-89
GMC	7-25-89	Checked By	GMC 9-89

Designed By	AEG
Checked By	JHP
Detailed By	GMC

Note: Station Equation; E-470 Sta. 39+97.16 = SH-470 Sta. 1412+75.3559

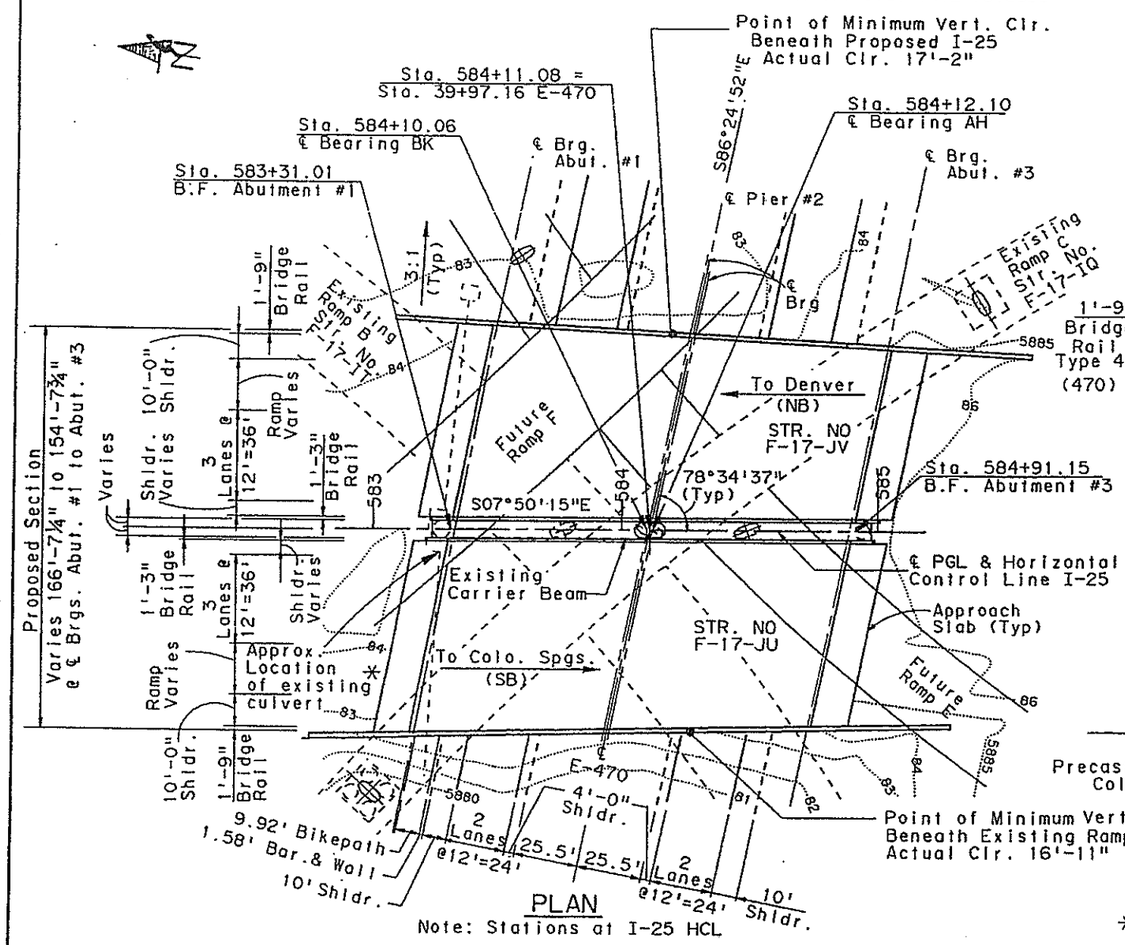

PLAN

Note: Stations at I-25 HCL

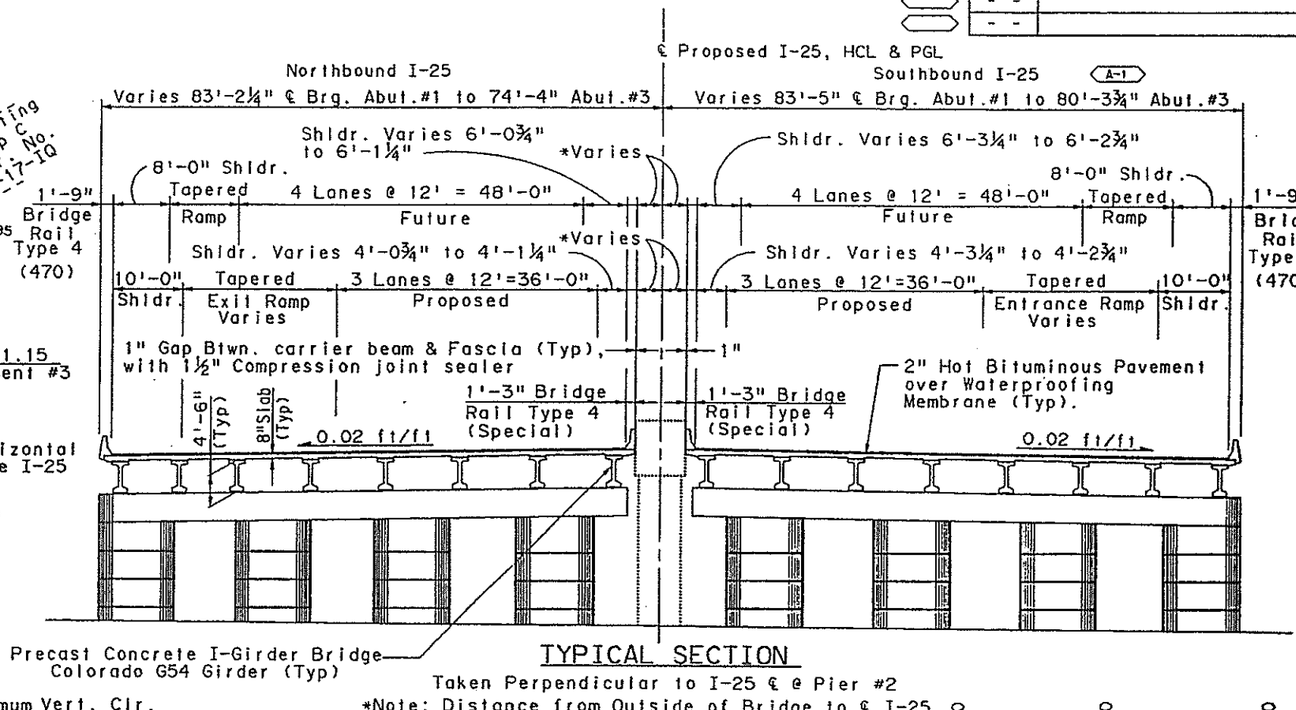

TYPICAL SECTION

Taken Perpendicular to I-25 ℄ @ Pier #2

*Note: Distance from Outside of Bridge to ℄ I-25 Varies from 3'-5¾" to 3'-6¼" (SB) & 3'-8¼" to 3'-7¾" (NB).

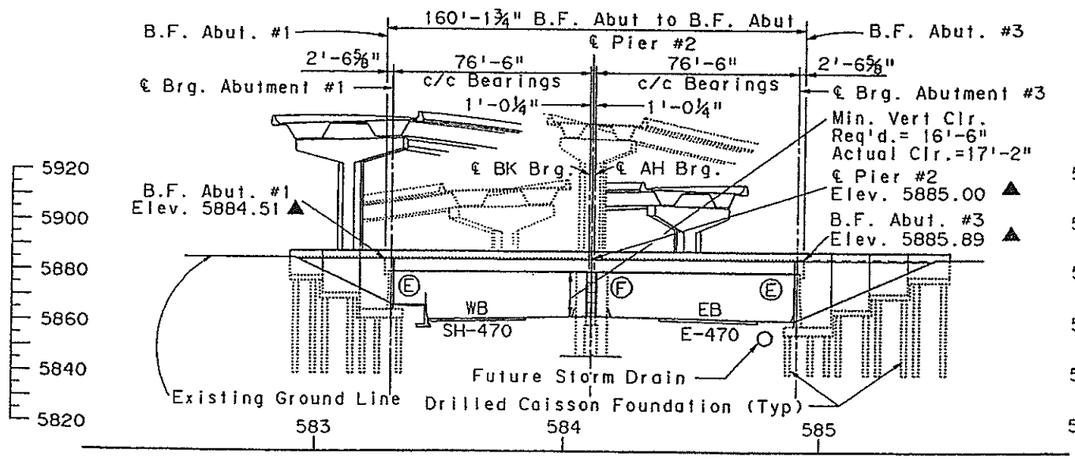

SECTION

Taken Along HCL I-25

▲: Indicates Finished Grade Elevation at top of Asphalt.

* NOTE: 42 inch Culvert to be removed.

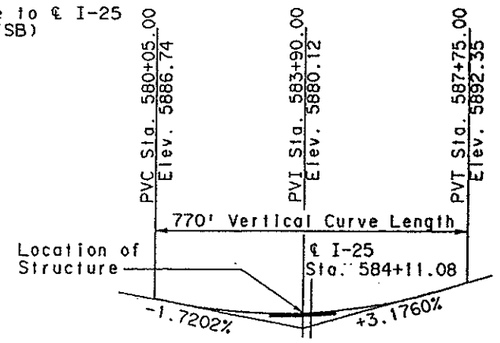

I-25 PROFILE GRADE

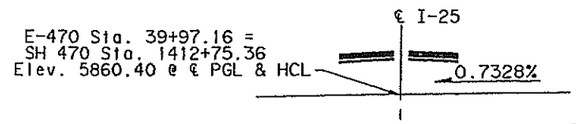

E-470 PROFILE GRADE

Notes: F=Fixed Bearing and E=Expansion Bearing
Live Load: HS 20-44 & Interstate Alternate Loading

E-470

Engineer 470 Partnership

DIVISION OF HIGHWAYS

I-25 OVER SH 470/E-470

GENERAL LAYOUT

Designer A.GRIFFITH	Structure Numbers	F-17-JU	
Detailer G.CHRISTNACHT		F-17-JV	
Drawing Number B-2	of 31	Drawings	

GENERAL LAYOUT/SECTIONS

SIGLT0121.90B

S12H::0585 11/4,1741SIGLT0121 90B

FED ROAD REG NO.	DIVISION	PROJECT NO.	SHEET NO.	TOTAL SHEETS
VIII	COLORADO		22	

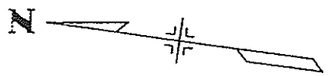

APPROXIMATE SCALE : 1" = 30'

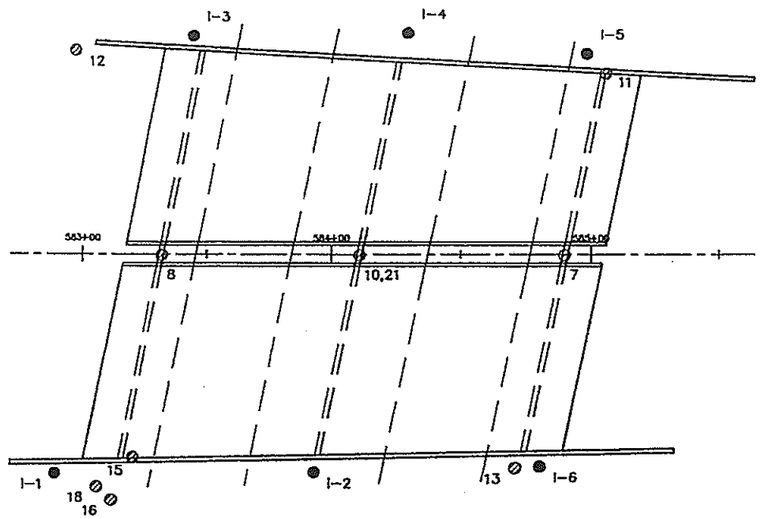

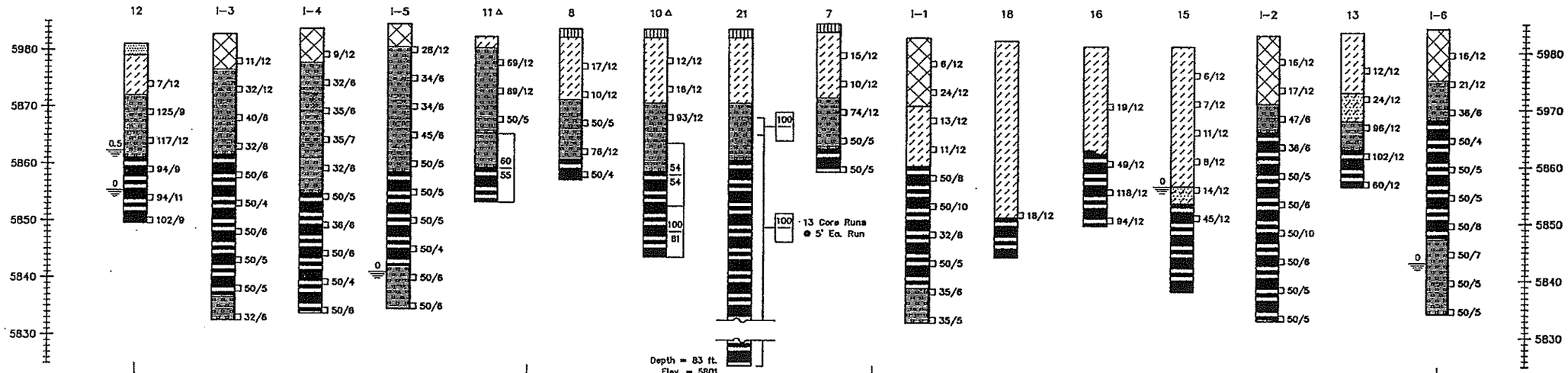

SUMMARY OF TEST RESULTS

Sample No.	Depth	Classification: Corp of Engrs. or Visual	Classification: AASHTO	Grading Analysis: Percent Gravel	Coarse Sand	Fine Sand	Silt and Clay	Atterberg Limits: Liquid Limit LL	Plastic Limit PL	Plastic Index PI	Water Cont. W %	Wet Unit Weight γ P.C.F.	Unconfined Strength Qu T.S.F.	Triaxial Shear Strength: φ°	c P.S.I.	Dia. of Sample (Inches)
I-1	14	Clay Sandy CL					53	47	17	30	14.2	131				1.935
I-1	24	Claystone									20.3	128	9.2			1.935
I-1	44	Sandstone									17.6	125				1.935
I-2	29	Claystone					99	60	22	38	21.8	128				1.935
I-2	39	Claystone									17.5	129	5.9			1.935
I-3	19	Sandstone		0			13				12.9	119				1.935
I-3	29	Claystone									20.4	130	10.6			1.935
I-4	24	Sandstone		0			16				13.7	117				1.935
I-4	39	Claystone									17.0	133	9.5			1.935
I-5	19	Sandstone		0			20				13.0	127				1.935
I-5	34	Claystone									20.0	127	9.9			1.935
I-5	39	Claystone									14.7	136				1.935
I-6	19	Claystone					94	56	22	34	20.3	126				1.935
I-6	24	Claystone									16.7	132	12.3			1.935
I-6	29	Claystone									21.7	127				1.935
I-6	34	Claystone									24.3	124				1.935

TYPE OF MATERIAL

- Asphalt pavement and base course.
- Man-made fill, clay, claystone, sand, medium stiff to very stiff, moist, gray, brown.
- Clay, sandy, stiff to very stiff, medium moist, brown.
- Sand, gravelly, loose, dry.
- Sand, clayey, medium dense, moist, brown.
- Sandstone bedrock, silty to clayey, hard to very hard, moist, brown, gray.
- Claystone bedrock, silty to sandy, hard to very hard, moist, gray, olive, rust.

LEGEND

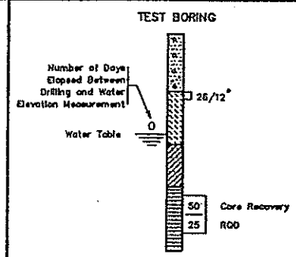

" DRIVE SAMPLE

The symbol 26/12 indicates 26 blows of a 140 pound hammer falling 30 inches were required to drive a 2.5 inch o.d. sampler 12 inches.

- Location of New Test Boring
- Location of Existing Test Boring
- △ Indicates a test hole drilled with water.

NOTES

1. Non-prefixed borings were drilled and logged by others for the existing structure.

E-470
I-25
MAINLINE BRIDGES
ENGINEERING GEOLOGY
CTL/Thompson, Inc.

Drawn by WJW
Checked by CSM
Date September 1989

STRUCTURE E-17-JU / E-17-JV
DWG NO. B-3 OF 31

AS CONSTRUCTED					
NO REVISIONS		REVISED		VOID	

FEDERAL ROAD REGION NO.	DIVISION	PROJECT NUMBER	SHEET NUMBER
VIII	COLORADO	1A02	23

REVISIONS		
- -		
- -		
- -		

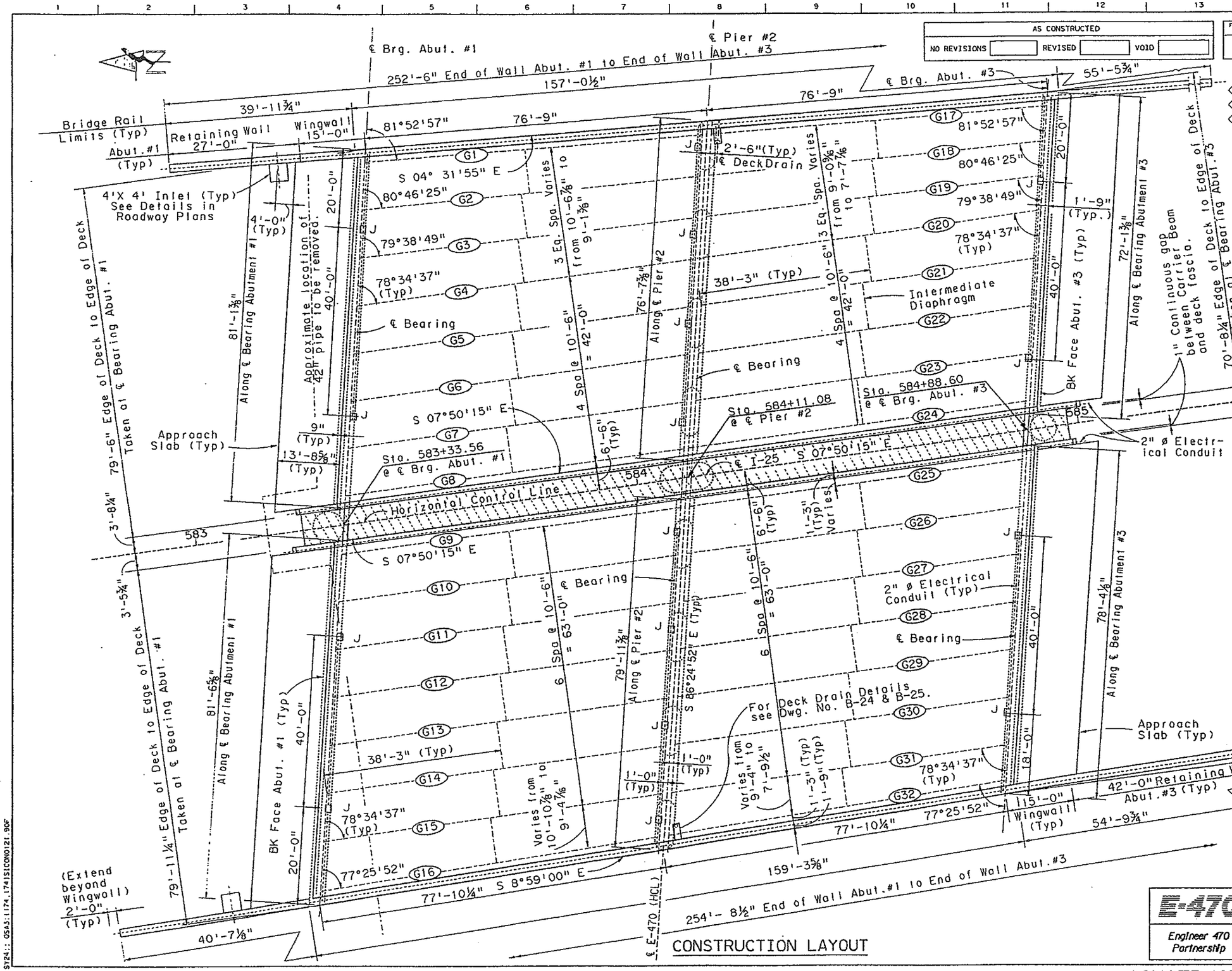

CONSTRUCTION LAYOUT

NOTES:

Construct Abutments and Pier parallel to ℄ SH 470/E-470.

For location of ¾" Electrical Conduit in Abutments & Pier, see Details on Dwg No. B-17, B-20 and B-23.

J = 6"x6"x4" Junction box. Drain for Condensation.

	INITIAL	DATE			
Designed By	AEG	7-89	Checked By	AEG	9-14-89
Checked By	JHP	7-89	Quantities By	JHP	9-89
Detailed By	ALG	7-89	Checked By	GNI	9-89

SY24:: OSA3:1174,1741SICON0121.90F

E-470

Engineer 470 Partnership

DIVISION OF HIGHWAYS

I-25 OVER SH 470/E-470
CONSTRUCTION LAYOUT

Designer A. Griffith	Structure Numbers	F-17-JU	
Detailer A. Griffith		F-17-JV	
Drawing Number B-4	of 31	Drawings	

CONSTRUCTION LAYOUT - I25 BRIDGE

SICON0121.90F

AS CONSTRUCTED					
NO REVISIONS		REVISED		VOID	

FEDERAL ROAD REGION NO.	DIVISION	PROJECT NUMBER	SHEET NUMBER
VIII	COLORADO	1A02	24

REVISIONS		
- -		
- -		
- -		

	INITIAL	DATE
Designed By	AEG	9-89
Checked By	AEG	9-89
Quantities By	JHP	9-89
Checked By	JHP	9-89
Detailed By	AEG	9-89
Checked By	GNT	9-89

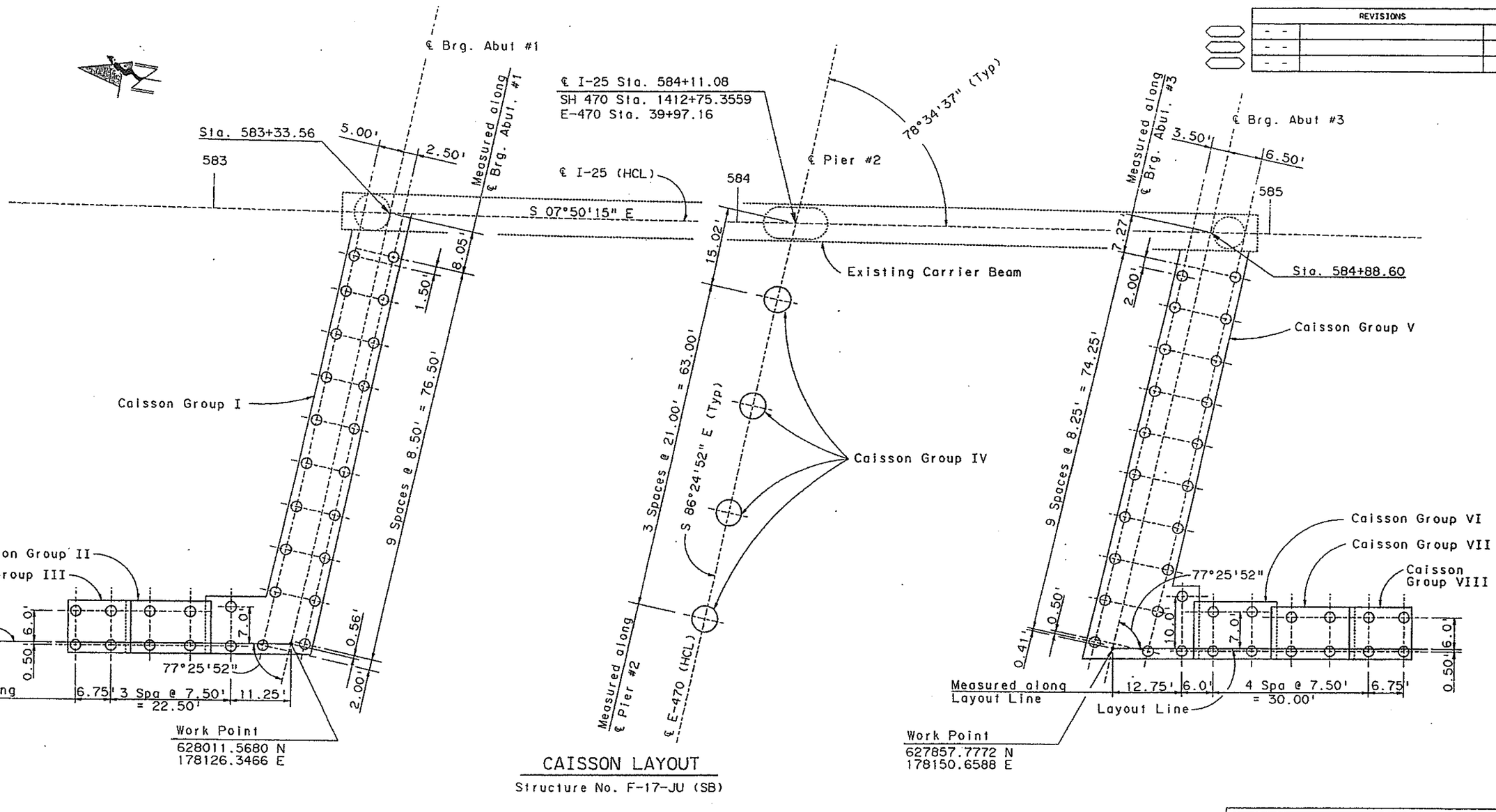

CAISSON LAYOUT

Structure No. F-17-JU (SB)

NOTES:

For Caisson Details & Estimated Tip Elevations for Caisson Group, See Dwg. No. B-7.

Layout Line Located at outside edge of Barrier Fascia.

Coordinates are referenced to the Colorado State Plane Coordinate System.

E-470

Engineer 470 Partnership

DIVISION OF HIGHWAYS

I-25 OVER SH 470/E-470

CAISSON LAYOUT SOUTHBOUND

Designer A. GRIFFITH		Structure Numbers	F-17-JU
Detailer A. GRIFFITH			F-17-JV
Drawing Number B-5	of 31	Drawings	

CAISSON LAYOUT (SOUTHBOUND

S124:: 05A5:1174.1741SIP1L0221.90G

AS CONSTRUCTED					
NO REVISIONS		REVISED		VOID	

FEDERAL ROAD REGION NO.	DIVISION	PROJECT NUMBER	SHEET NUMBER
VIII	COLORADO	IA02	25

REVISIONS			
	- -		
	- -		
	- -		

	INITIAL	DATE
Designed By	AEG	8-89
Checked By	JHP	8-89
Detailed By	AEG	8-89

Checked By	JHP	9-89
Quantities By	JHP	9-89
Checked By	GNT	9-89

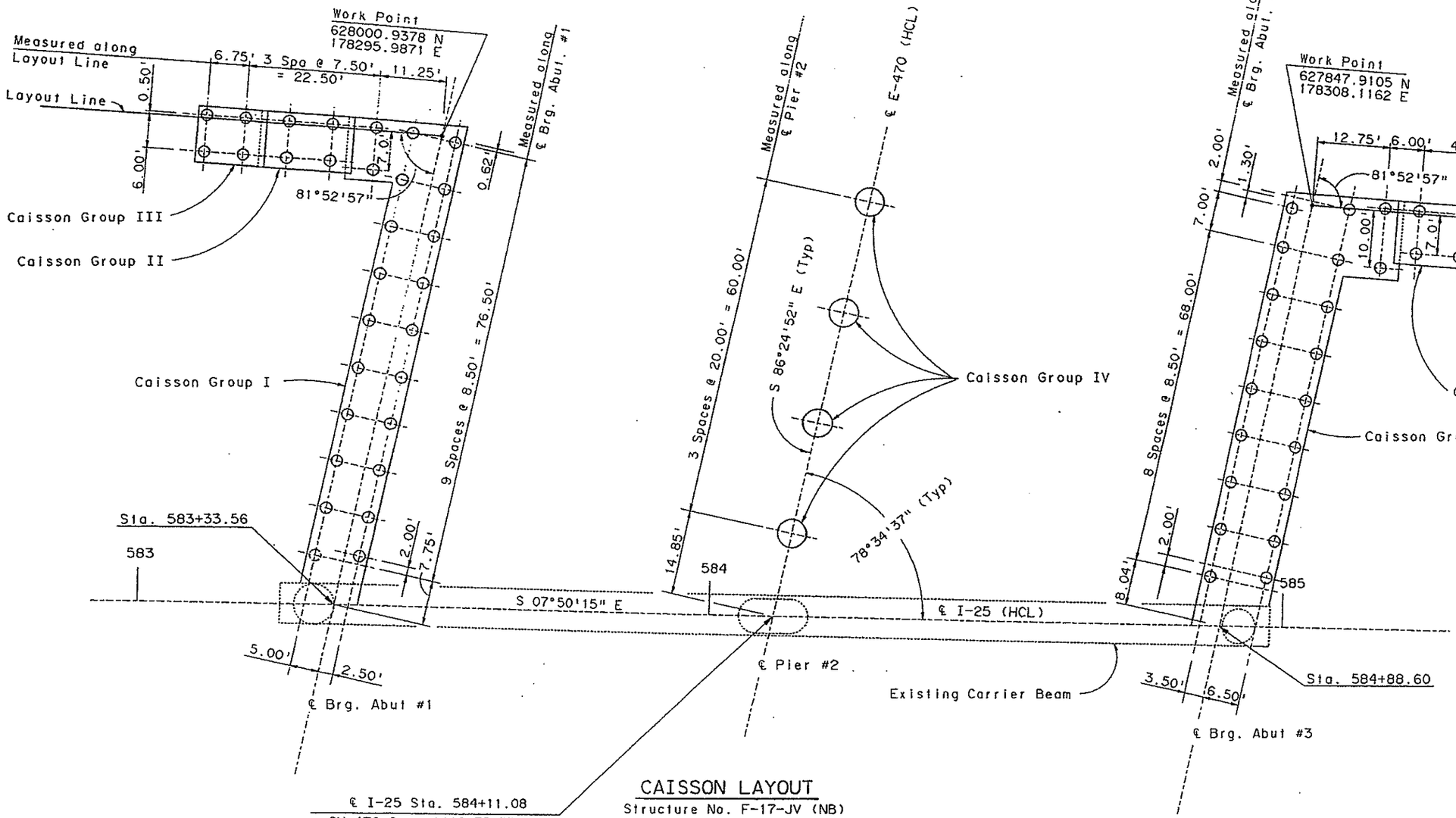

CAISSON LAYOUT

Structure No. F-17-JV (NB)

NOTES:

For Caisson Details & Estimated Tip Elevations for Caisson Group, See Dwg. No. B-7.

Layout Line Located at outside edge of Barrier Fascia.

Coordinates are referenced to the Colorado State Plane Coordinate System.

E-470

Engineer 470 Partnership

DIVISION OF HIGHWAYS

I-25 OVER SH 470/E-470
CAISSON LAYOUT NORTHBOUND

Designer A. GRIFFITH	Structure Numbers	F-17-JU	
Detailer A. GRIFFITH		F-17-JV	
Drawing Number B-6	of 31	Drawings	

5724:: OSA3:1174.1741SIPIL0121.90G

AS CONSTRUCTED					
NO REVISIONS		REVISED		VOID	

FEDERAL ROAD REGION NO.	DIVISION	PROJECT NUMBER	SHEET NUMBER
VIII	COLORADO	1A02	26

REVISIONS			
- -			
- -			
- -			

CAISSON DATA

CAISSON GROUP	LOCATION	DIMENSIONS "A"	"B"	"C"	"CC"	"D"	"E"	ELEVATIONS "F"	"G"	"H"	REINFORCEMENT # OF BARS	SIZE	DOWELS # OF BARS	SIZE	STANDARD HOOK REQUIRED	DESIGN LOAD PER CAISSON	TOTAL NUMBER OF CAISSONS
I	ABUT.#1(SB)	2'-0"	3 5/8"	20'-0"	2'-8"	----	20'-0"	5859.0	5859.0	5839.0	10	#8	-	-	YES	271 Kips	22
II	ABUT.#1(SB)	2'-0"	3 5/8"	17'-6"	1'-8"	----	10'-0"	5867.5	5860.0	5850.0	10	#7	-	-	YES	97 Kips	4
III	ABUT.#1(SB)	2'-0"	3 5/8"	25'-6"	1'-2"	----	10'-0"	5875.5	5860.0	5850.0	10	#7	-	-	YES	42 Kips	4
IV	PIER #2(SB)	5'-0"	9 5/8"	22'-0"	----	9'-4"	22'-0"	5858.0	5858.0	5836.0	30	#9	30	#9	-	844 Kips	4
V	ABUT.#3(SB)	2'-6"	3 5/8"	15'-0"	2'-8"	----	15'-0"	5853.0	5853.0	5838.0	10	#10	-	-	YES	371 Kips	22
VI	ABUT.#3(SB)	2'-0"	3 5/8"	18'-0"	2'-8"	----	18'-0"	5860.5	5860.5	5842.5	10	#8	-	-	YES	207 Kips	4
VII	ABUT.#3(SB)	2'-0"	3 5/8"	15'-0"	1'-8"	----	15'-0"	5869.0	5869.0	5854.0	10	#7	-	-	YES	96 Kips	4
VIII	ABUT.#3(SB)	2'-0"	3 5/8"	15'-0"	1'-2"	----	12'-0"	5877.0	5874.0	5862.0	10	#7	-	-	YES	37 Kips	4
I	ABUT.#1(NB)	2'-0"	3 5/8"	20'-0"	2'-8"	----	20'-0"	5859.0	5859.0	5839.0	10	#8	-	-	YES	271 Kips	22
II	ABUT.#1(NB)	2'-0"	3 5/8"	15'-0"	1'-8"	----	15'-0"	5867.5	5867.5	5852.5	10	#7	-	-	YES	96 Kips	4
III	ABUT.#1(NB)	2'-0"	3 5/8"	15'-0"	1'-2"	----	12'-6"	5875.5	5873.0	5860.5	10	#7	-	-	YES	37 Kips	4
IV	PIER #2(NB)	5'-0"	9 5/8"	22'-0"	----	9'-4"	22'-0"	5858.0	5858.0	5836.0	30	#9	30	#9	-	844 Kips	4
V	ABUT.#3(NB)	2'-6"	3 5/8"	15'-0"	2'-8"	----	15'-0"	5853.0	5853.0	5838.0	10	#10	-	-	YES	371 Kips	20
VI	ABUT.#3(NB)	2'-0"	3 5/8"	18'-0"	2'-8"	----	18'-0"	5860.5	5860.5	5842.5	10	#7	-	-	YES	207 Kips	4
VII	ABUT.#3(NB)	2'-0"	3 5/8"	15'-0"	1'-8"	----	15'-0"	5869.0	5869.0	5854.0	10	#7	-	-	YES	96 Kips	4
VIII	ABUT.#3(NB)	2'-0"	3 5/8"	15'-0"	1'-2"	----	15'-0"	5877.0	5877.0	5862.0	10	#7	-	-	YES	37 Kips	4

(B)

NOTES:

1. For Caisson layout, see Dwg. No. B-5 & B-6.
2. Dimension "A" shown is the outside diameter of the caisson.
3. Dimension "B" indicates the required minimum clearance for Dowel bars from edge of caisson.
4. Dimension "C" shown is based on an estimated top of bedrock elevation "G". If Elevation "G" is higher than elevation "F", then elevation "G" has been recorded as "F".
5. Dimension "CC" is the projected length of caisson reinforcing to be extended above top of Caisson when dowels are not required. See table if Standard hook is required.
6. Dowel bars at all pier locations shall be epoxy-coated. All other reinforcing is non epoxy-coated.
7. Dowel bars are included in the Caisson, and will not be paid for separately.
8. Top of bedrock elevation shall be verified at the time of construction by the Engineer.
9. Dimension "E" shown is the required minimum penetration in bedrock.
10. Provide a clean roughened surface at top of Caisson.

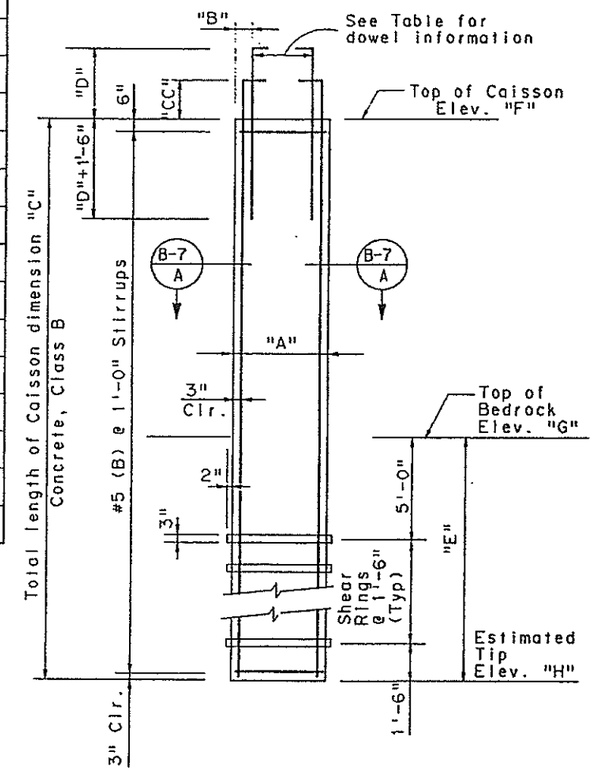

ELEVATION

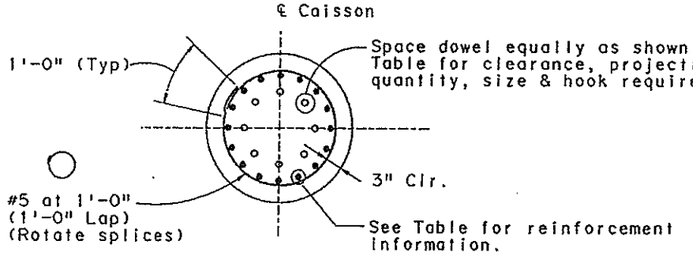

TYPICAL SECTION B-7 A

INITIAL	DATE	Checked By	DATE	Checked By	DATE
AEG	8-89	JAP	9-89	JAP	9-89
GMT	8-89	Quantities By	9-89	Checked By	9-89
GMC	8-89	Checked By	9-89		

Designed By AEG
Checked By GMT
Detailed By GMC

S124:: 05A3:1174.1741SIPTL0321.906

E-470 Engineer 470 Partnership

DIVISION OF HIGHWAYS

I-25 OVER SH 470/E-470
CAISSON DETAILS

Designer A. GRIFFITH	Structure Numbers	F-17-JU	
Detailer G CHRISTNACHT		F-17-JV	
Drawing Number B-7	of 31	Drawings	

AS CONSTRUCTED					
NO REVISIONS		REVISED		VOID	

FEDERAL ROAD REGION NO.	DIVISION	PROJECT NUMBER	SHEET NUMBER
VIII	COLORADO	1A02	27

REVISIONS		
10-5-89	NOTES	AEG
- -		
- -		

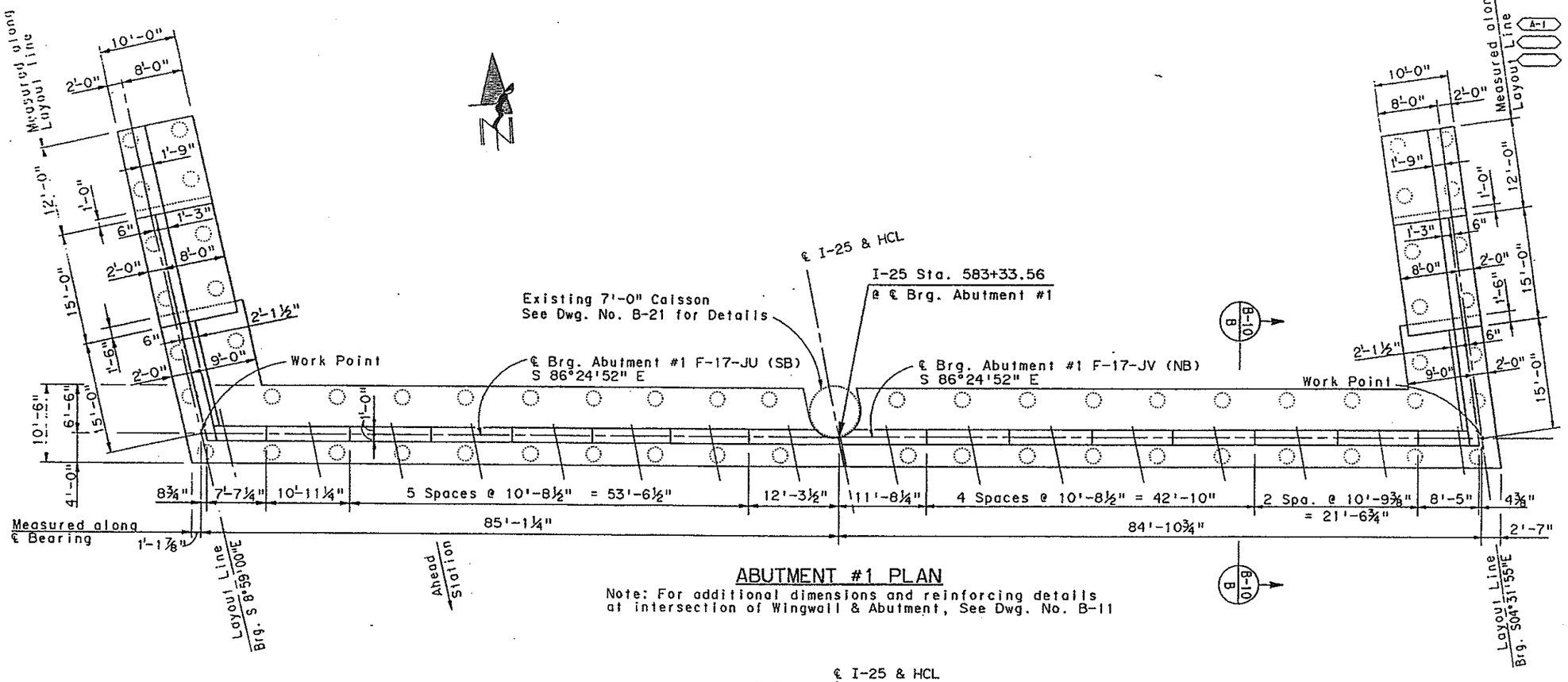

ABUTMENT #1 PLAN

Note: For additional dimensions and reinforcing details at intersection of Wingwall & Abutment, See Dwg. No. B-11

BEARING SEAT ELEVATIONS:

Girder No.	Abutment #1
Northbound Str.No. F-17-JV	
G1	5877.32
G2	5877.52
G3	5877.72
G4	5877.93
G5	5878.12
G6	5878.33
G7	5878.53
G8	5878.73
Southbound Str.No. F-17-JU	
G9	5878.72
G10	5878.50
G11	5878.29
G12	5878.07
G13	5877.85
G14	5877.64
G15	5877.42
G16	5877.20

ABUTMENT #1	
Girder #	Angle F
G1	08°07'03"
G2	09°13'35"
G3	10°21'11"
G4-15	11°25'23"
G16	12°34'09"

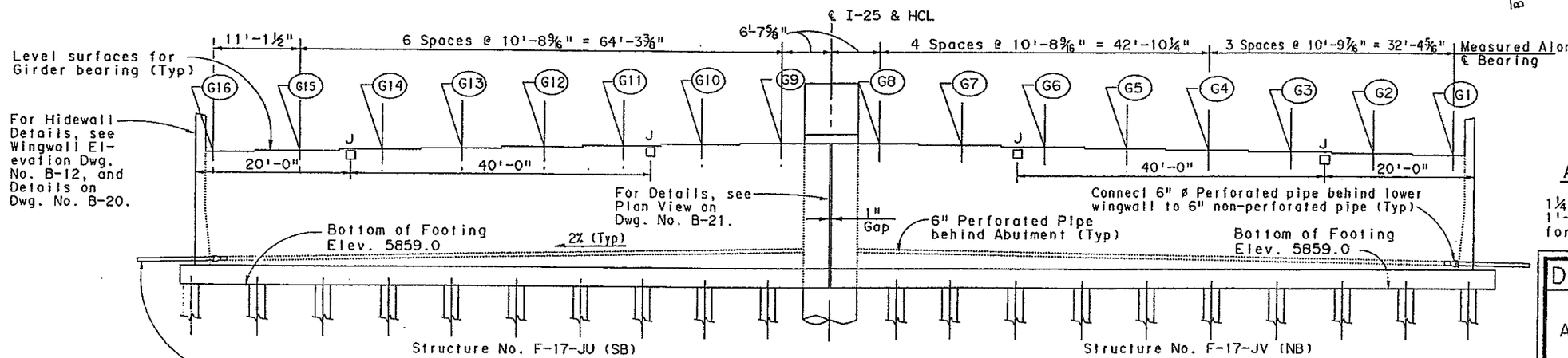

ABUTMENT #1 ELEVATION

Looking Back Station

J= 6"x 6"x 4" junction box. Drain for condensation.

Note: Front Face Abutment Requires Architectural Treatments, Type 1 & Type 2. See Special Provision for Details. A-1
For positive drain behind Abutment Wall, see Detail A, Dwg. No. B-10

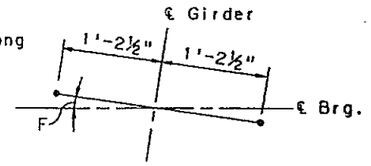

ANCHOR BOLT DETAIL

1¼" ø H.S. Bolts x 1'-6". Embed 1'-0" into concrete and project 6" for connection to sole plate.

INITIAL	DATE	Checked By	AEG	9-89
Designed By AEG	7-89	Quantities By	JHP	9-89
Checked By JHP	8-89	Checked By	GMT	9-89
Detailed By GMC	7-89			

SY24:: OSA3:1174.1741SIABT0121.90J

E-470
Engineer 470 Partnership

DIVISION OF HIGHWAYS

I-25 OVER SH-470/E-470
ABUTMENT #1 AND WINGWALLS
PLAN & ELEVATION

Designer A. Griffith	Structure Numbers	F-17-JU	
Detailer G.Christnacht		F-17-JV	
Drawing Number B-8	of 31	Drawings	

ABUTMENT #1 AND WINGWALL PLAN

SIABT0121.90J

AS CONSTRUCTED					
NO REVISIONS		REVISED		VOID	

FEDERAL ROAD REGION NO.	DIVISION	PROJECT NUMBER	SHEET NUMBER
VIII	COLORADO	1A02	28

REVISIONS			
A-1	10-5-89	NOTES	AEG
	- -		
	- -		

INITIAL	DATE	Designed By	Checked By	Quantities By	Checked By
JHP	7-89	JHP	AEG	JHP	GNT
JHP	8-89	AEG	GMC	JHP	GNT
AEG	8-89	Checked By		JHP	GNT
GMC	7-89	Detailed By		JHP	GNT

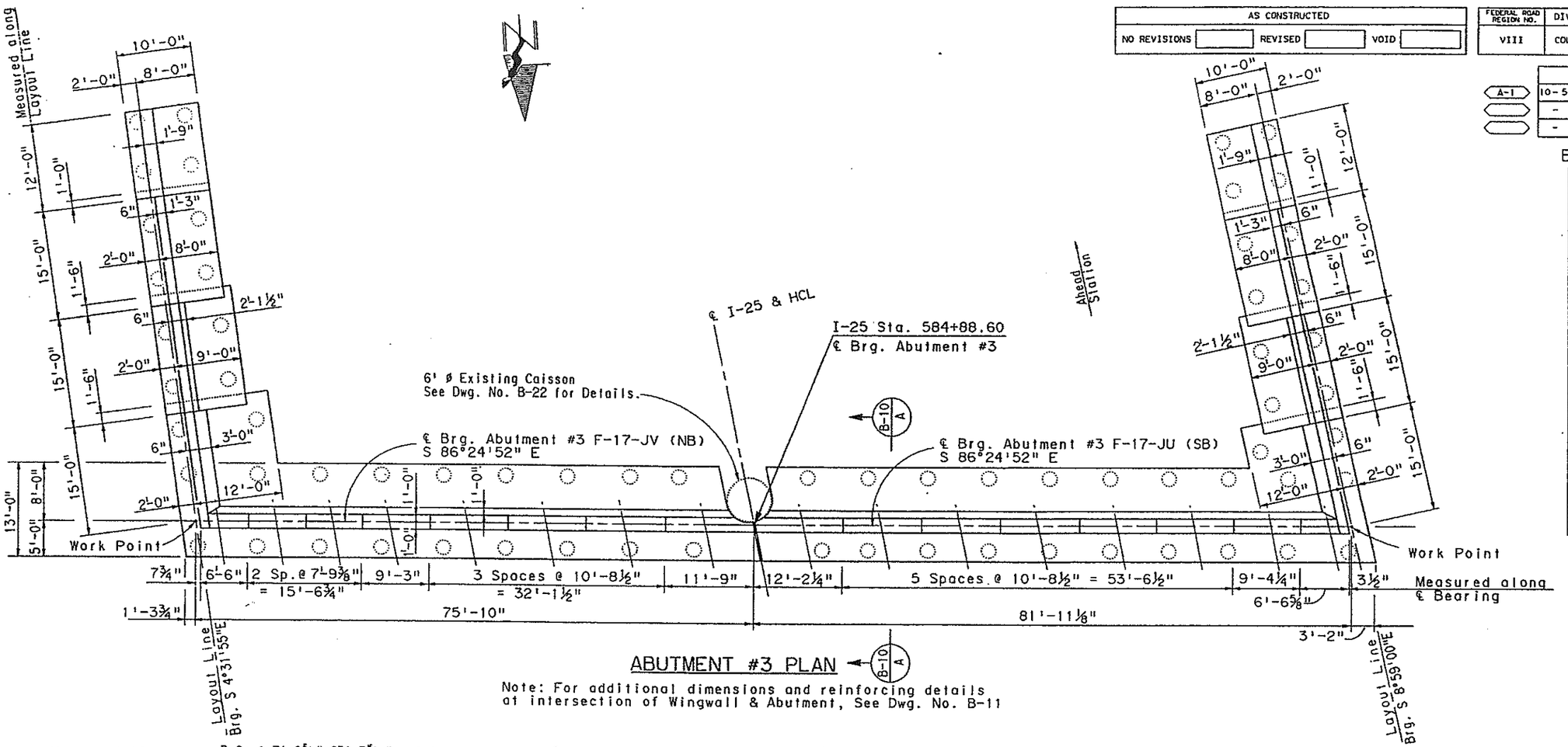

ABUTMENT #3 PLAN

Note: For additional dimensions and reinforcing details at intersection of Wingwall & Abutment, See Dwg. No. B-11

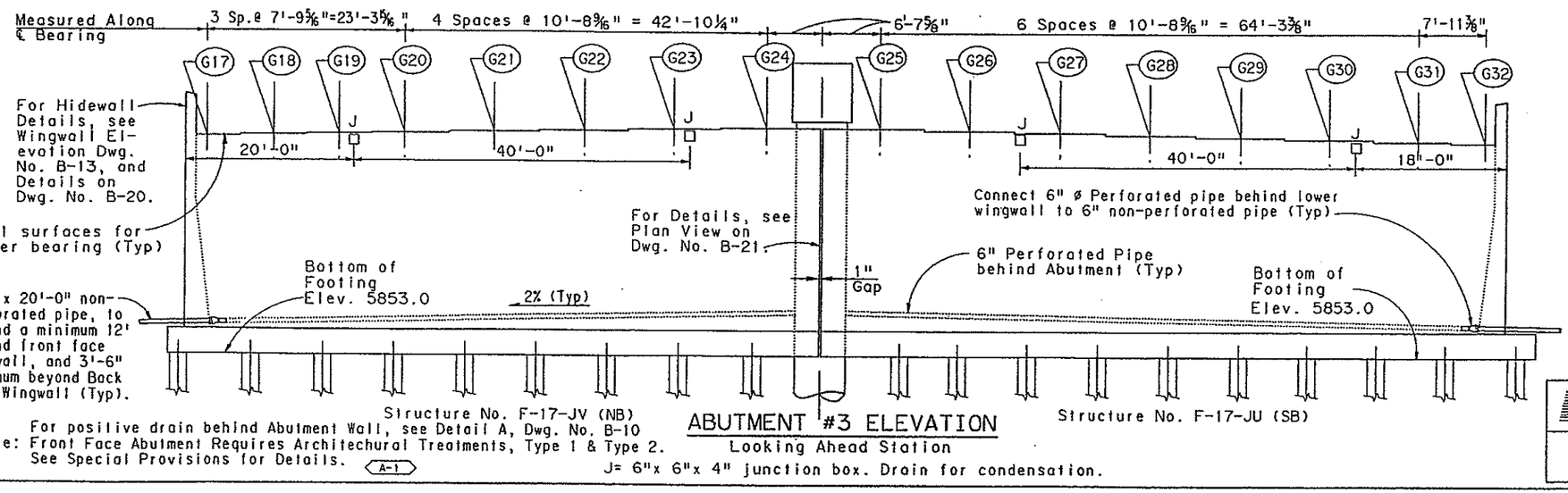

ABUTMENT #3 ELEVATION

Looking Ahead Station

Note: For positive drain behind Abutment Wall, see Detail A, Dwg. No. B-10
For Front Face Abutment Requires Architechural Treatments, Type 1 & Type 2. See Special Provisions for Details. A-1

J= 6"x 6"x 4" junction box. Drain for condensation.

BEARING SEAT ELEVATIONS:

Girder No.	Abutment #3
Northbound Str.No.F-17-JV	
G17	5878.97
G18	5879.10
G19	5879.23
G20	5879.36
G21	5879.54
G22	5879.72
G23	5879.90
G24	5880.08
Southbound Str.No.F-17-JU	
G25	5880.05
G26	5879.81
G27	5879.57
G28	5879.33
G29	5879.09
G30	5878.86
G31	5878.62
G32	5878.44

ABUTMENT #3	
Girder #	Angle F
G17	08°07'03"
G18	09°13'35"
G19	10°21'11"
G20-31	11°25'23"
G32	12°34'08"

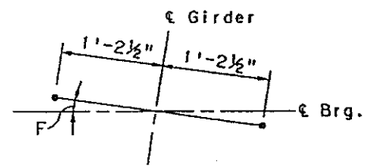

ANCHOR BOLT DETAIL

1¼" ø H.S. Bolts x 1'-6". Embed 1'-0" into concrete and project 6" for connection to sole plate.

E-470

Engineer 470 Partnership

DIVISION OF HIGHWAYS

I-25 OVER SH-470/E-470
ABUTMENT #3 AND WINGWALLS
PLAN & ELEVATION

Designer J. Peck		Structure Numbers	F-17-JU
Detailer G.Christnochi			F-17-JV
Drawing Number	B-9	of 31	Drawings

ABUTMENT #3 AND WINGWALL PLAN

START0221.00

AS CONSTRUCTED					
NO REVISIONS		REVISED		VOID	

FEDERAL ROAD REGION NO.	DIVISION	PROJECT NUMBER	SHEET NUMBER
VIII	COLORADO	1A02	29

REVISIONS			
A-1	10-5-89	DIMENSIONS	AEG
	- -		
	- -		

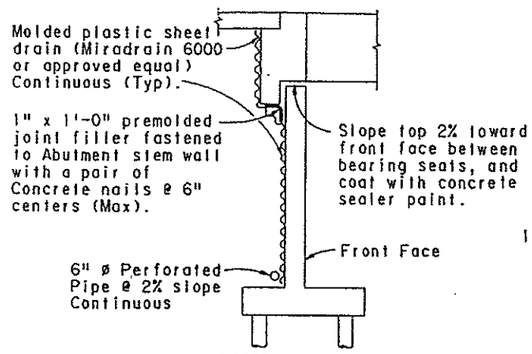

DETAIL A

Positive drain behind Abutments (Typ).

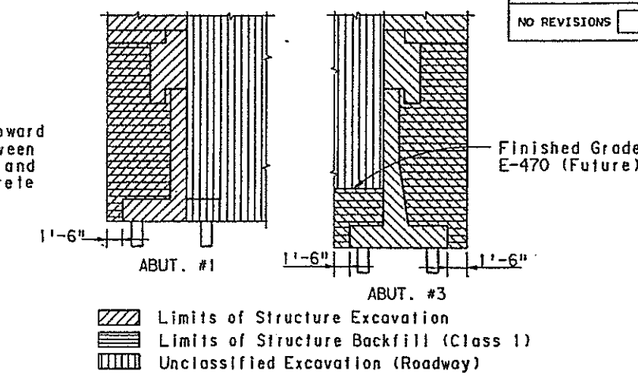

LIMIT OF QUANTITIES

NOTES:

1. For anchor bolt locations and seat elevations See Dwg No. B-8 & B-9.
2. For Details of wingwall and abutment interface see Dwg. No. B-11.
3. Initial Backfill for Abutment #1 & Abutment #3 shall be placed 1'-6" below bearing seat elevation. Once end diaphragms and deck have been poured, backfill the Abut. #1 & Abutment #3 simultaneously in 1 ft. lifts.
4. See Detail A, this sheet, for positive drain behind abutment walls.
5. 4-Inch Void forming material (Styrofoam) shall be included in the work and shall not be paid for separately.
6. All Concrete on this Drawing is Concrete, Class B (Bridge).

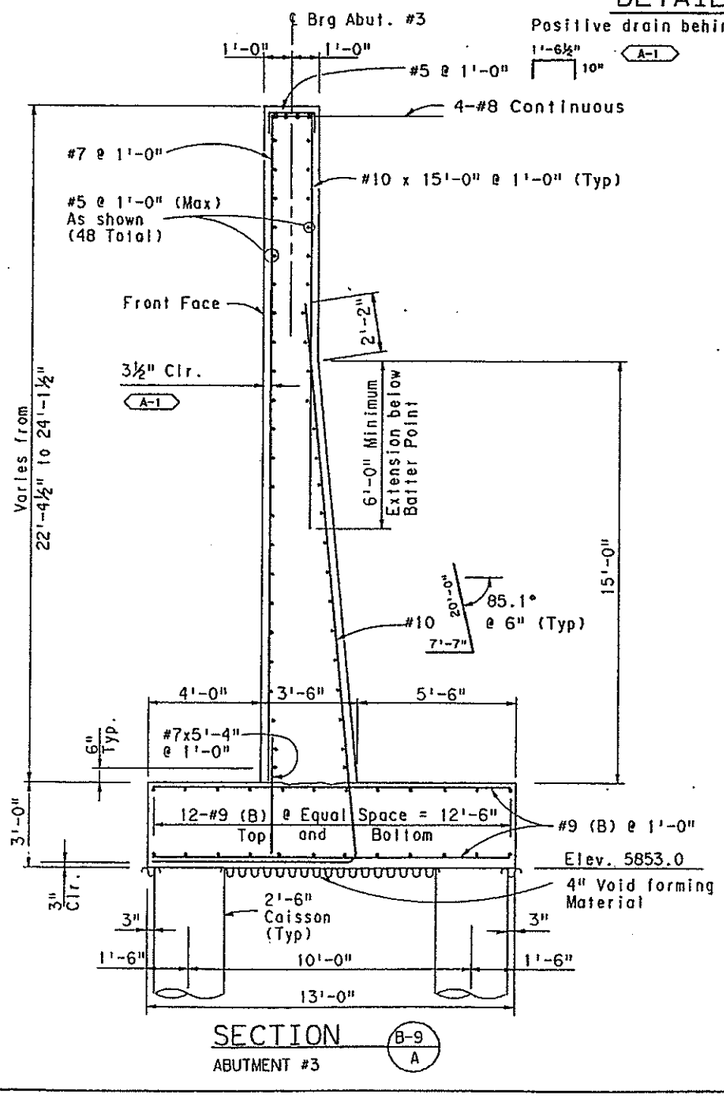

SECTION B-9 A

ABUTMENT #3

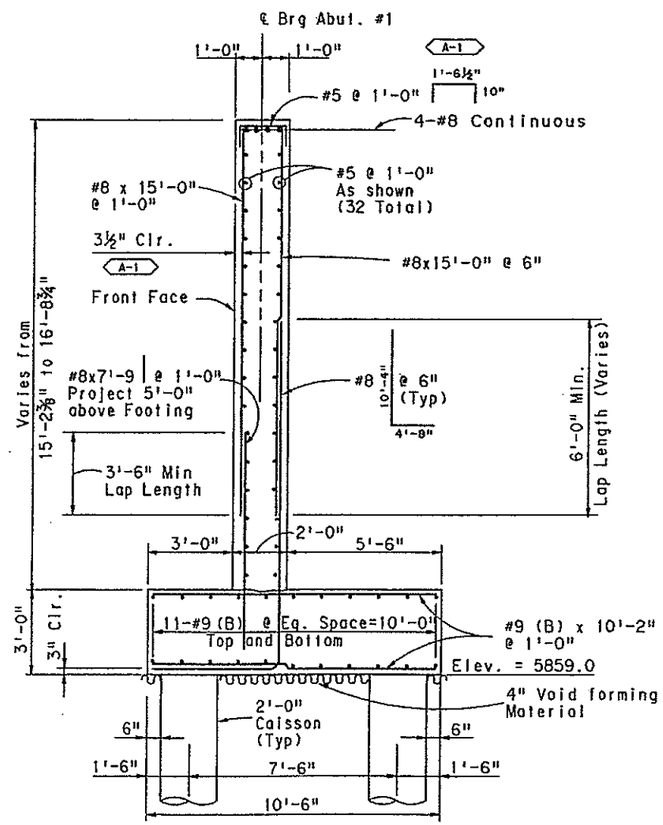

SECTION B-8 B

ABUTMENT #1

	INITIAL	DATE			
Designed By	AEG	8-89	Checked By	AEG	9-89
Checked By	JHP	8-89	Quantities By	JHP	9-89
Detailed By	GMC	8-89	Checked By	GNT	9-89

SY24:: OSA3:1174,174|SIABT0321.90J

E-470

Engineer 470 Partnership

DIVISION OF HIGHWAYS

I-25 OVER SH 470/E-470
ABUTMENT TYPICAL SECTIONS

Designer A. Griffith		Structure Numbers	F-17-JU
Detailer G.Christnacht			F-17-JV
Drawing Number	B-10	of 31	Drawings

ABUTMENTS #1 & #3 TYPICAL SECTIONS

SIABT0321.90J

AS CONSTRUCTED						FEDERAL ROAD REGION NO.	DIVISION	PROJECT NUMBER	SHEET NUMBER
NO REVISIONS		REVISED		VOID		VIII	COLORADO	1A02	30

REVISIONS		
- -		
- -		
- -		

	INITIAL	DATE
Designed By	GNT	8-89
Checked By	AEG	8-89
Detailed By	GNT	8-89
Checked By	AEG	9-89
Quantities By	JHP	9-89
Checked By	JHP	9-89
Checked By	GNT	9-89

SY24:::05A3::1174,1741S1AB10521.90J

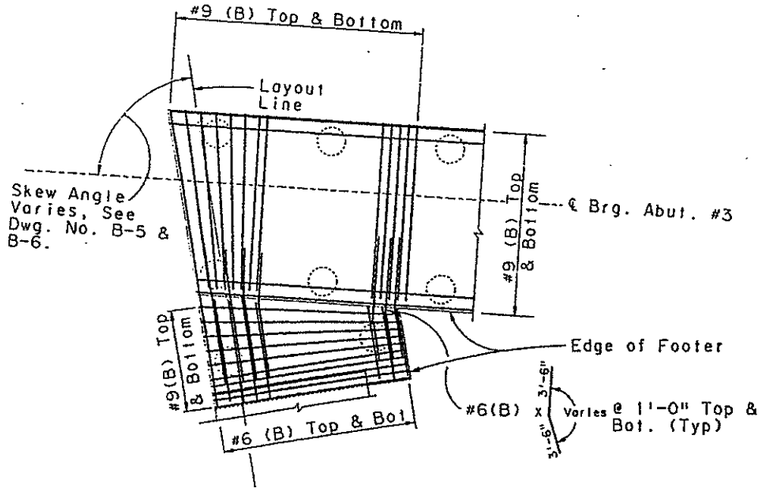

TYPICAL REBAR DETAILS AT ABUTMENT #3 FOOTERS @ CORNERS

Southbound shown, Northbound similar-opposite hand with different skew angles.

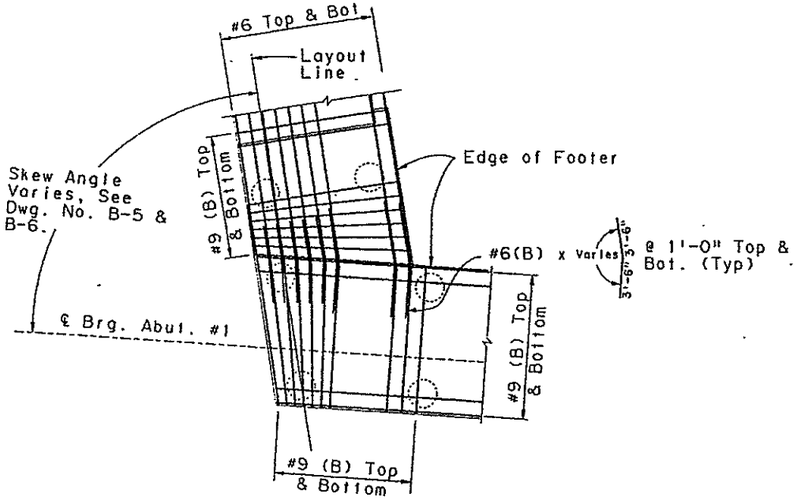

TYPICAL REBAR DETAILS AT ABUTMENT #1 FOOTERS & CORNERS

Southbound shown, Northbound similar-opposite hand with different skew angles.

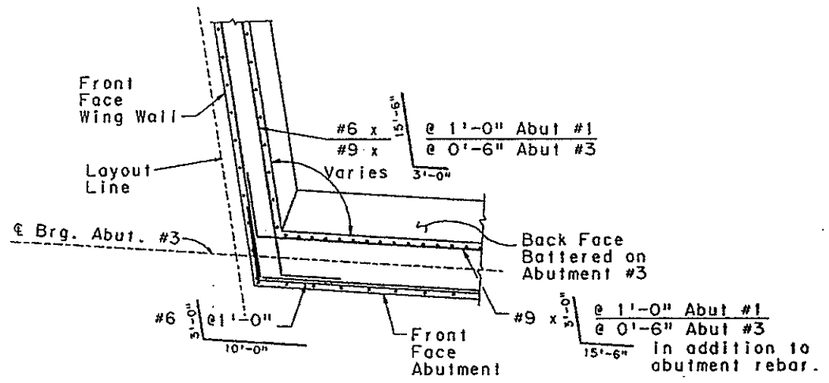

PLAN OF TYPICAL WALL CORNER

E-470

Engineer 470 Partnership

DIVISION OF HIGHWAYS

I-25 OVER SH 470/E-470
ABUTMENT DETAILS
MISCELLANEOUS

Designer G. Tsiouvaras	Structure Numbers	F-17-JU	
Detailer G. Tsiouvaras		F-17-JV	
Drawing Number B-11	of 31	Drawings	

AS CONSTRUCTED					
NO REVISIONS		REVISED		VOID	

FEDERAL ROAD REGION NO.	DIVISION	PROJECT NUMBER	SHEET NUMBER
VIII	COLORADO	1A02	31

REVISIONS		
- -		
- -		
- -		

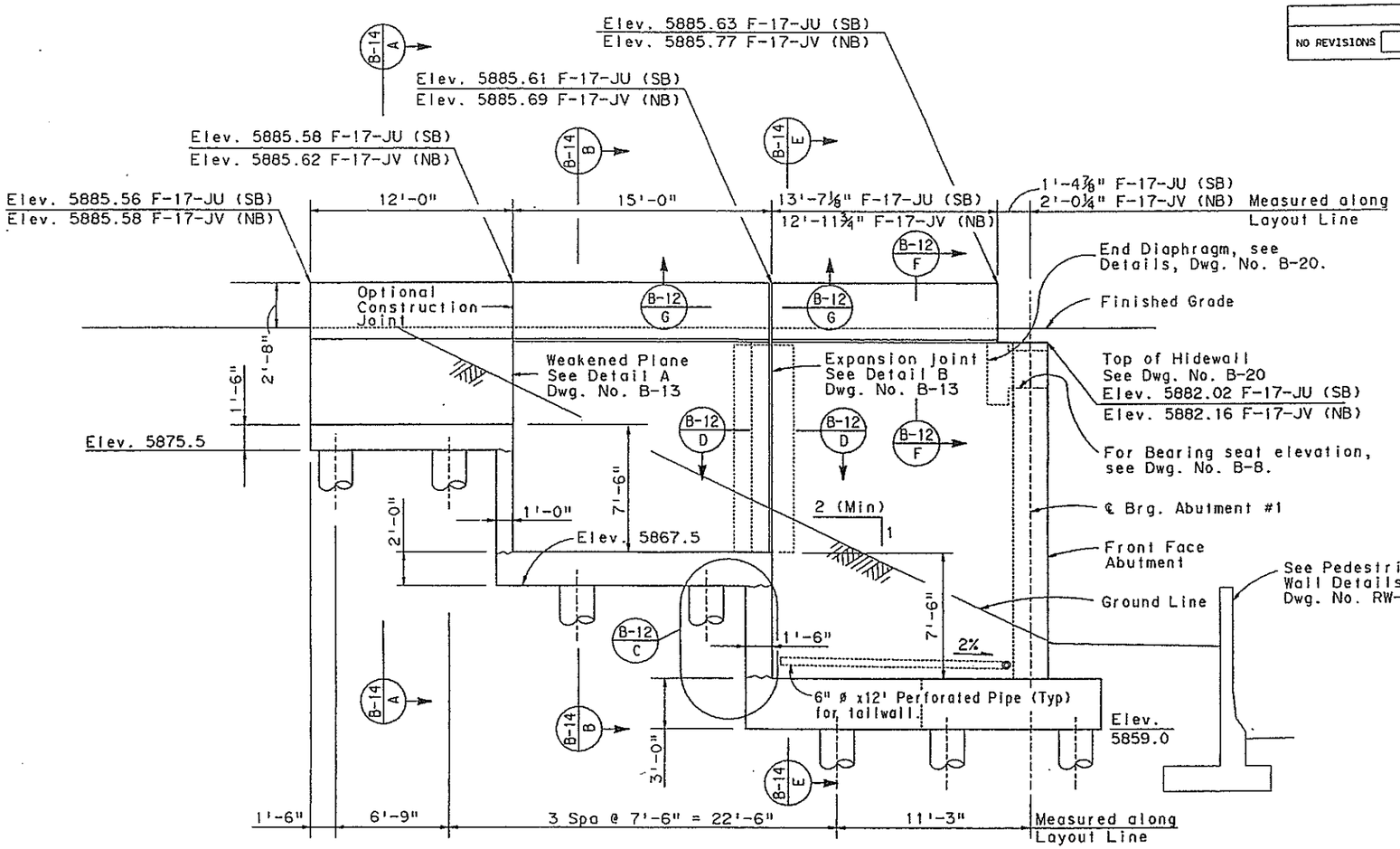

ELEVATION ABUTMENT #1

Str. No. F-17-JU (SB) shown
Str. No. F-17-JV (NB) Similar, Opposite hand

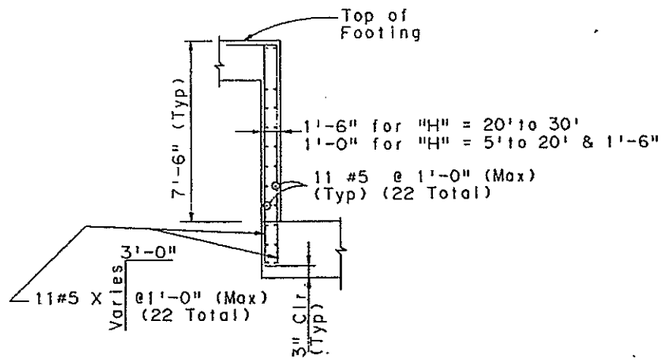

SECTION B-12 C B-13 E

Typical Footing Step

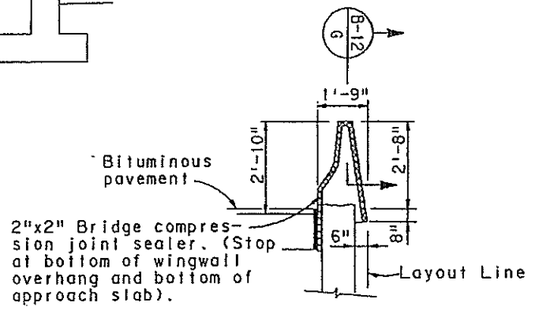

SECTION B-12 F B-13 F

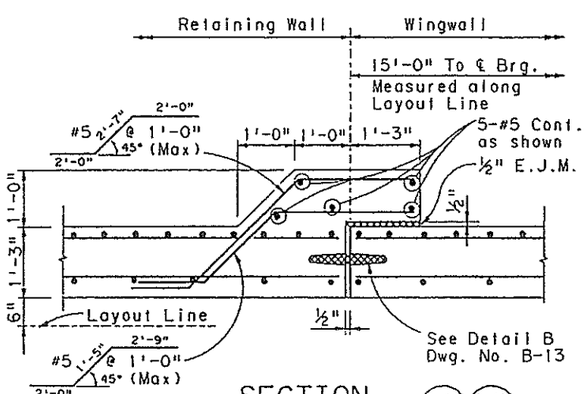

SECTION B-12 D B-13 H

NOTES:

1. Dimensions taken along Layout Line established at Outside edge of barrier fascia. Elevations provided are at 2'-10" above a Work Point (W. Pt.) established at intersection of projected finished grade elevation at outside edge of barrier as shown at Sections A,B,C & D on Dwg. No. B-14.
2. See Plan View of Wingwalls on Dwg. No. B-8 & B-9.
3. For information regarding 6" ø perforated pipe, see Dwg. No. B-8.

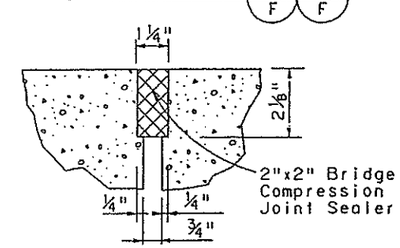

SECTION B-12 G B-13 I

INITIAL	DATE	Checked By	AEG	9-89
AEG	7-89		JHP	9-89
GNT	8-89	Quantities By	JHP	9-89
GMC	7-89	Checked By	GNT	9-89

Designed By
Checked By
Detailed By

SY24:: QSA3:1174,1741S1WWL0121.90K

E-470
Engineer 470 Partnership

DIVISION OF HIGHWAYS

I-25 OVER SH-470/E-470
ABUTMENT #1 WINGWALL
ELEVATION AND DETAILS

Designer A. Griffith		Structure Numbers	F-17-JU
Detailer G.Christnacht			F-17-JV
Drawing Number	B-12	of 31	Drawings

ABUTMENT #1 WINGWALL ELEVATIONS

STWWL0121.90K

AS CONSTRUCTED					
NO REVISIONS		REVISED		VOID	

FEDERAL ROAD REGION NO.	DIVISION	PROJECT NUMBER	SHEET NUMBER
VIII	COLORADO	1A02	32

REVISIONS			
- -			
- -			
- -			

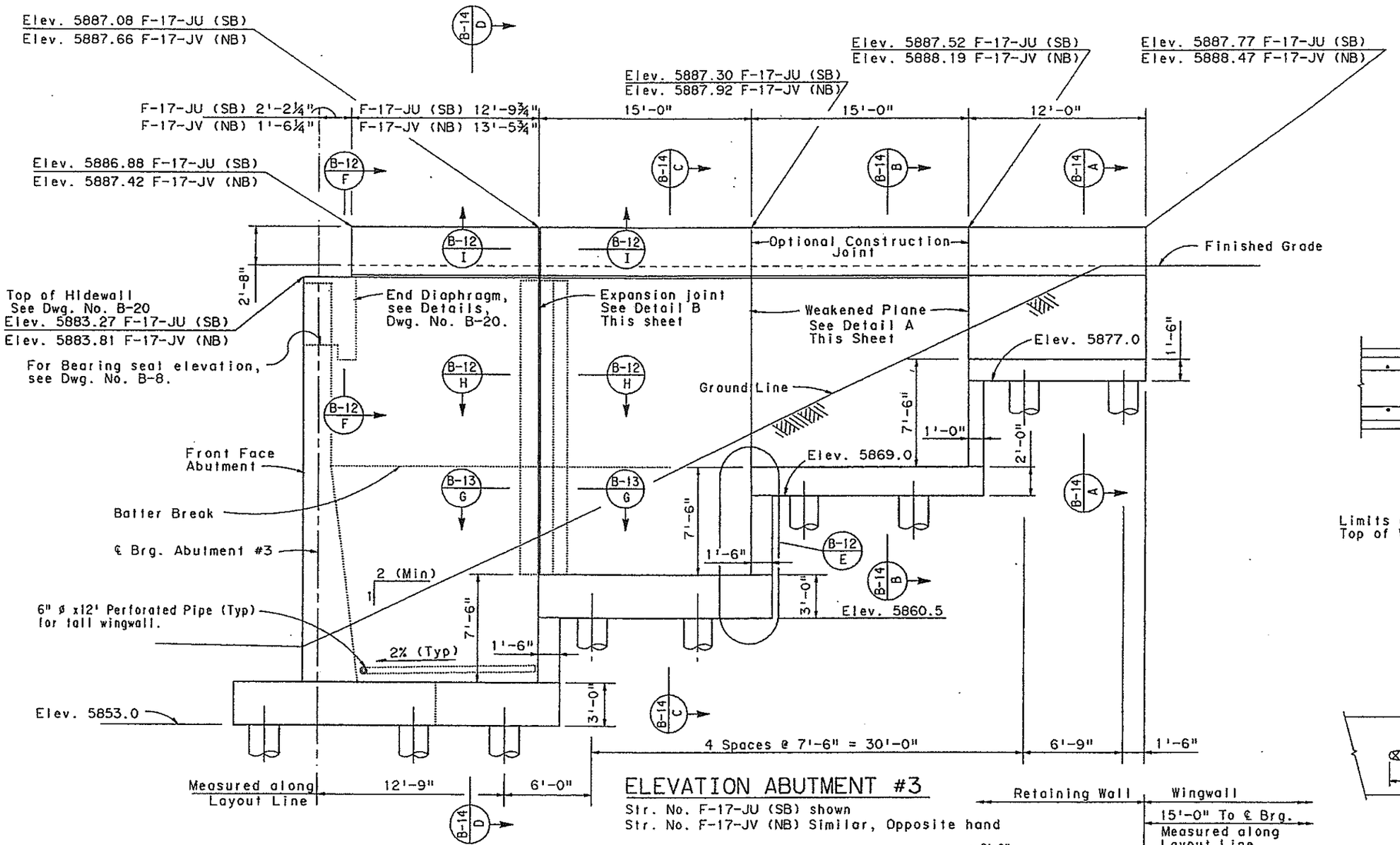

ELEVATION ABUTMENT #3

Str. No. F-17-JU (SB) shown
Str. No. F-17-JV (NB) Similar, Opposite hand

NOTES:
1. Dimensions taken along Layout Line established at Outside edge of barrier fascia. Elevations provided are at 2'-10" above a Work Point (W. Pt.) established at intersection of projected finished grade elevation at outside edge of barrier as shown at Sections A,B,C & D on Dwg. No. B-14.
2. See Plan View of Wingwalls on Dwg. No. B-8 & B-9.
3. For information regarding 6" ø perforated pipe, see Dwg. No. B-9.

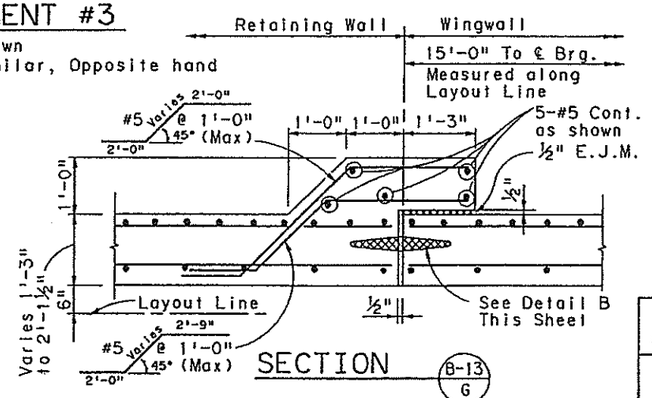

SECTION

B-13 / 6

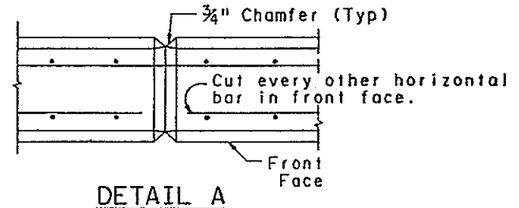

DETAIL A

Weakened Plane
Plan View

Limits of Control Joint are From Top of Wall to Top of Footing.

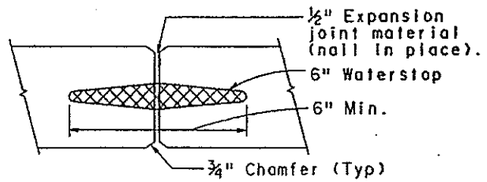

DETAIL B

Expansion joint

INITIAL	DATE	Checked By	AEG	9-89
Designed By	AEG 8-89		JHP	9-89
Checked By	GNT 8-89	Quantities By	JHP	9-89
Detailed By	AEG 8-89	Checked By	GNT	9-89

SX24::: 05A3:1174,1741SIWL022I.90K

E-470
Engineer 470 Partnership

DIVISION OF HIGHWAYS

I-25 OVER SH-470/E-470
ABUTMENT #3 WINGWALL
ELEVATION AND DETAILS

Designer A. GRIFFITH	Structure Numbers	F-17-JU	
Detailer A. GRIFFITH		F-17-JV	
Drawing Number B-13	of 31	Drawings	

ABUTMENT #3 WINGWALL ELEVATIO

AS CONSTRUCTED							
NO REVISIONS		REVISED		VOID			

FEDERAL ROAD REGION NO.	DIVISION	PROJECT NUMBER	SHEET NUMBER
VIII	COLORADO	1A02	33

REVISIONS			
A-1	10-5-89	NOTES	AEG
	- -		
	- -		

	INITIAL	DATE
Designed By	GNT	8-89
Checked By	AEG	8-89
Detailed By	GMC	8-89
Checked By	JHP	9-89
Quantities By	JHP	9-89
Checked By	GNT	9-89

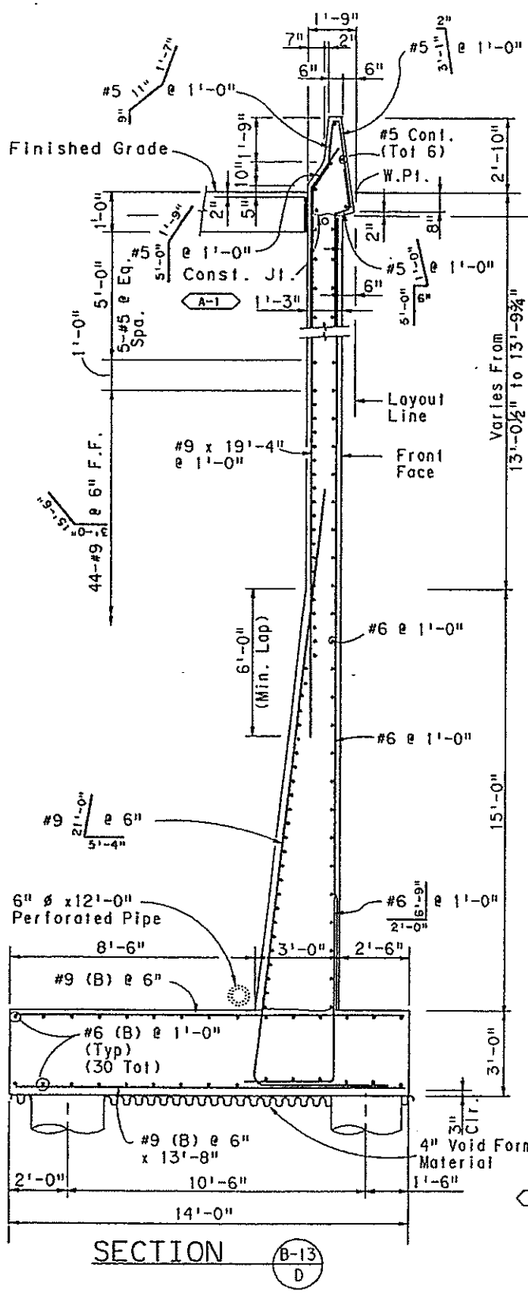

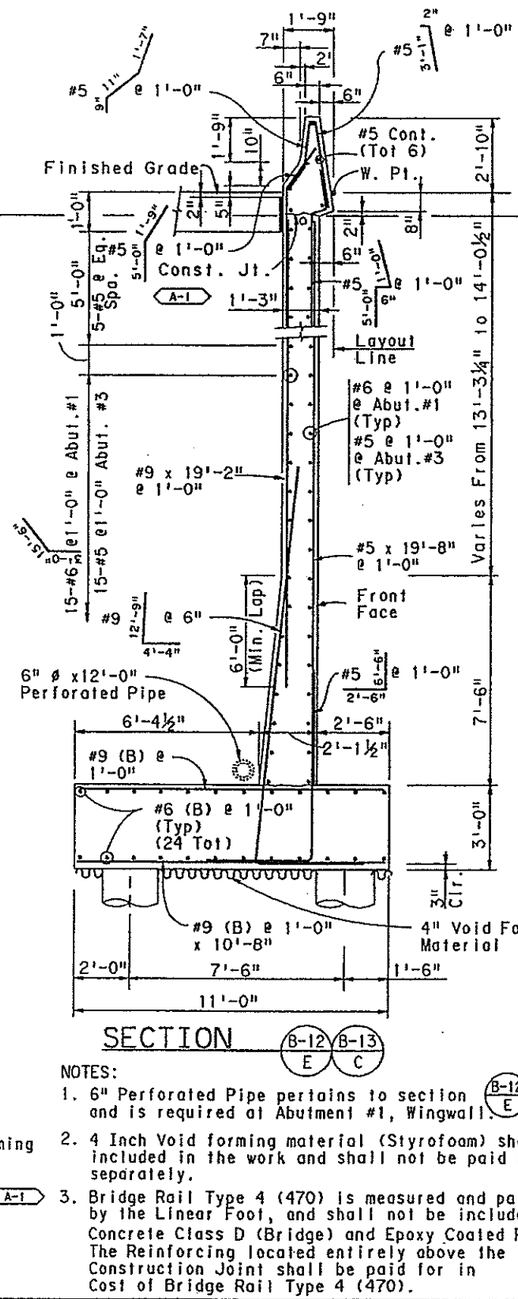

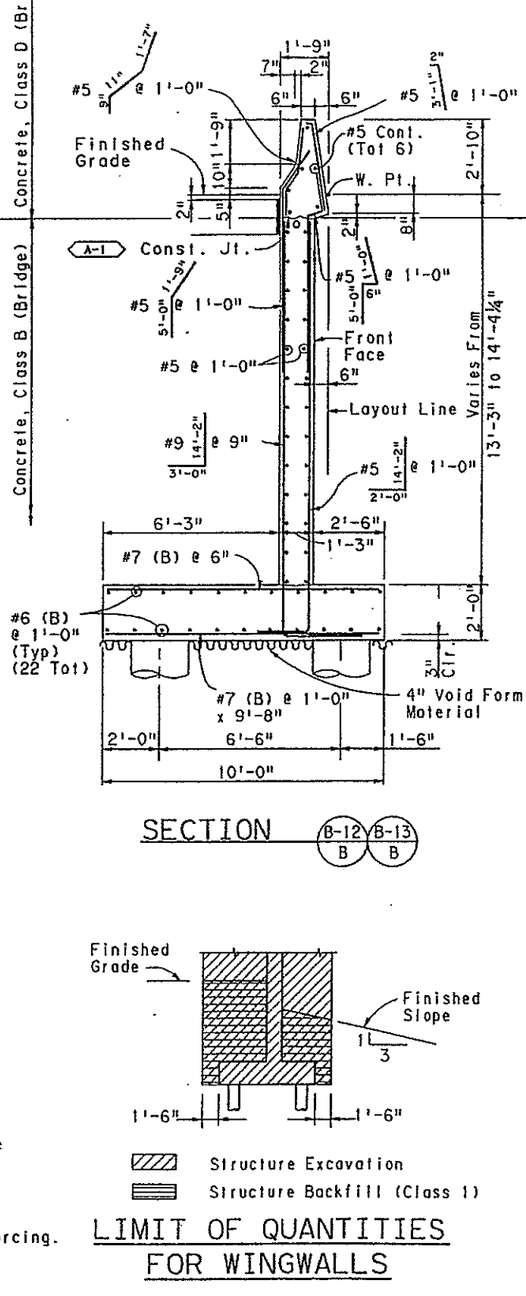

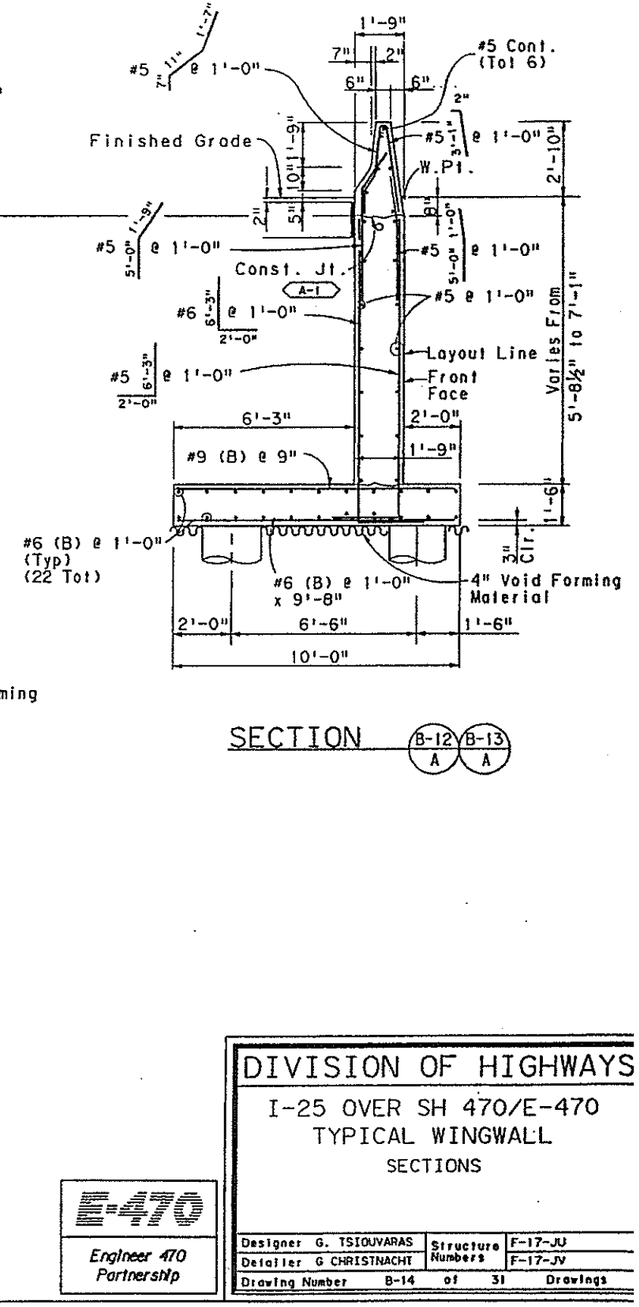

NOTES:

1. 6" Perforated Pipe pertains to section B-12 E and is required at Abutment #1, Wingwall 1.
2. 4 Inch Void forming material (Styrofoam) shall be included in the work and shall not be paid for separately.
3. Bridge Rail Type 4 (470) is measured and paid for by the Linear Foot, and shall not be included in Concrete Class D (Bridge) and Epoxy Coated Reinforcing. The Reinforcing located entirely above the Construction Joint shall be paid for in Cost of Bridge Rail Type 4 (470). A-1

LIMIT OF QUANTITIES FOR WINGWALLS

E-470
Engineer 470 Partnership

DIVISION OF HIGHWAYS

I-25 OVER SH 470/E-470

TYPICAL WINGWALL

SECTIONS

Designer G. TSIOUVARAS		Structure Numbers	F-17-JU
Detailer G CHRISTNACHT			F-17-JV
Drawing Number B-14	of 31	Drawings	

TYPICAL WINGWALL SECTION

STWW 0321 90

S124:: 05A3:1174,1415|WW.0321.90K

AS CONSTRUCTED					
NO REVISIONS		REVISED		VOID	

FEDERAL ROAD REGION NO.	DIVISION	PROJECT NUMBER	SHEET NUMBER
VIII	COLORADO	1A02	35

REVISIONS			
- -			
- -			
- -			

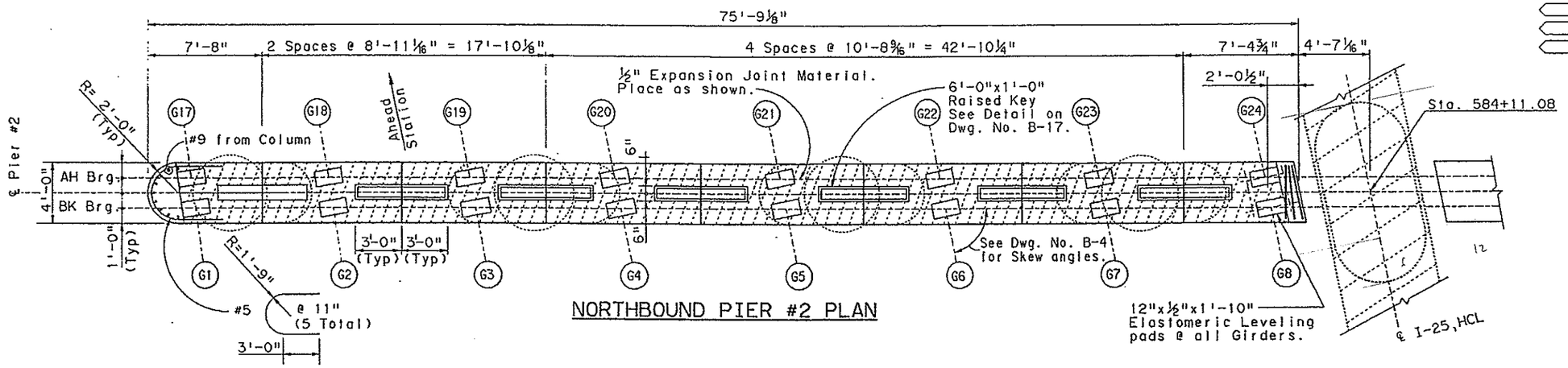

NORTHBOUND PIER #2 PLAN

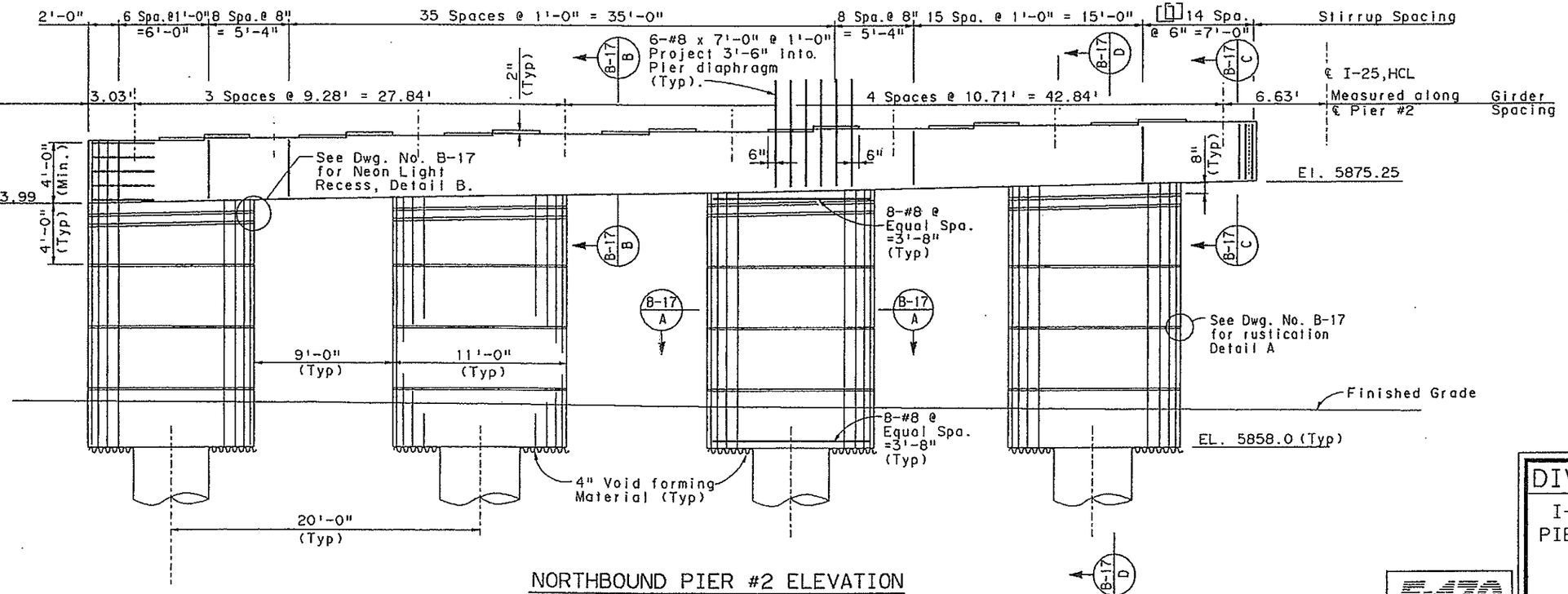

NORTHBOUND PIER #2 ELEVATION

LOOKING UP STATION

4 Inch Void forming material (Styrofoam) shall be included in the work, and shall not be paid for separately.

Bearing Seat Elevations
Str. F-17-JV (Northbound)

Girder	Elevation
G1 & G17	5878.09
G2 & G18	5878.25
G3 & G19	5878.42
G4 & G20	5878.58
G5 & G21	5878.77
G6 & G22	5878.96
G7 & G23	5879.15
G8 & G24	5879.35

	INITIAL	DATE	
Designed By	JHP	9-89	Checked By
Checked By	AEG	9-89	Quantities
Detailed By	JHP	9-89	Checked By
Quantities By	GNT	9-89	

E-470
Engineer 470 Partnership

DIVISION OF HIGHWAYS

I-25 OVER SH 470/E-470
PIER #2 PLAN & ELEVATION
(NORTHBOUND)

Designer J. Peck	Structure Numbers	F-17-JU
Detailer A. Griffith		F-17-JV
Drawing Number B-16	of 31	Drawings

PIER #2 DETAILS (NORTHBOUND)

STRPD0321.90M

S1234:: 05A5.11/A4.1/415IPRD0321.90M

AS CONSTRUCTED					
NO REVISIONS		REVISED		VOID	

FEDERAL ROAD REGION NO.	DIVISION	PROJECT NUMBER	SHEET NUMBER
VIII	COLORADO	1A02	36

REVISIONS			
A-1	10-5-89	NOTES	AEG
	- -		
	- -		

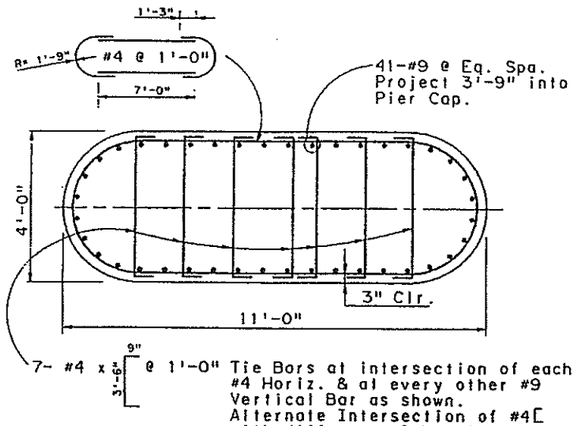

SECTION B-15 A / B-16 A

Typical Pier Reinforcing detail

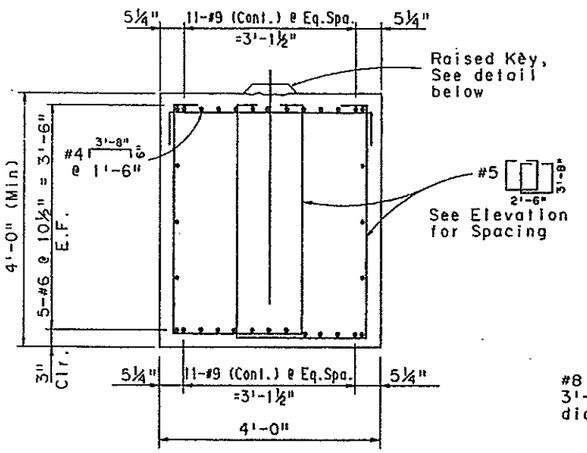

SECTION B-15 B / B-16 B

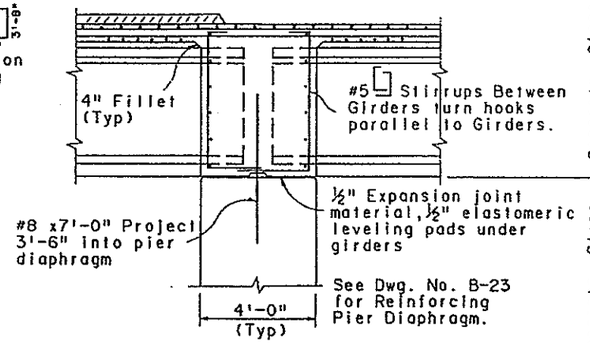

SECTION

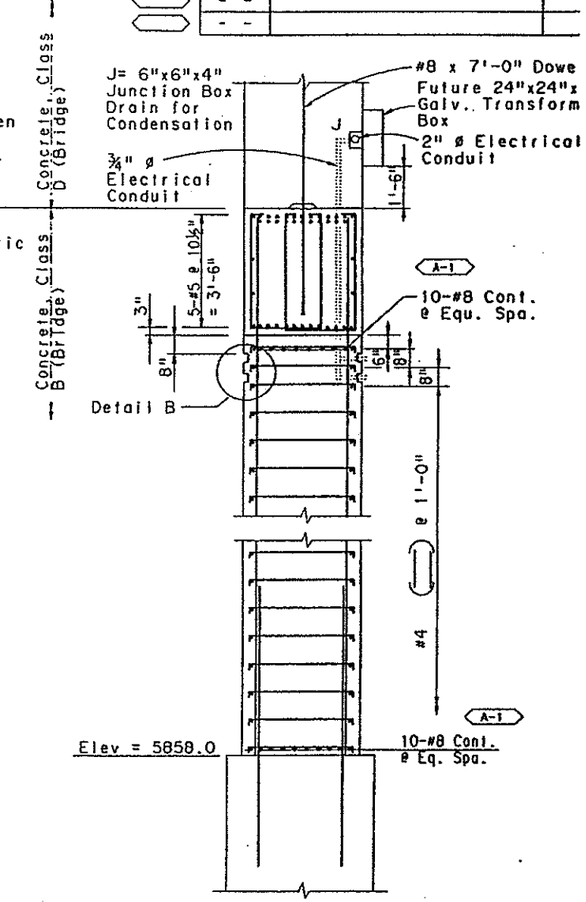

SECTION B-15 D / B-16 D

NOTE: Work this sheet with Dwg. No. B-23 for location and Details for Junction and Future Transformer Boxes.

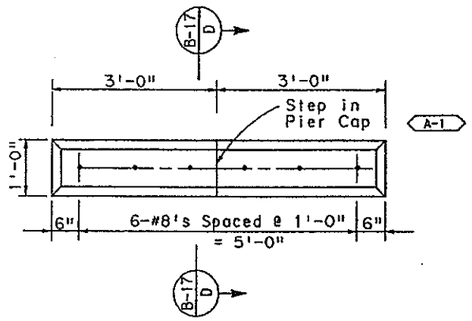

RAISED KEY PLAN

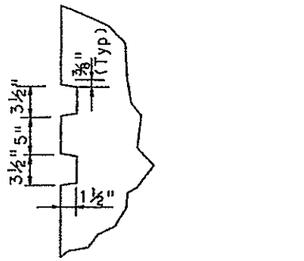

DETAIL B

Neon Tube Recesses shall run parallel to bottom of Pier Cap and Bridge Cross slope.

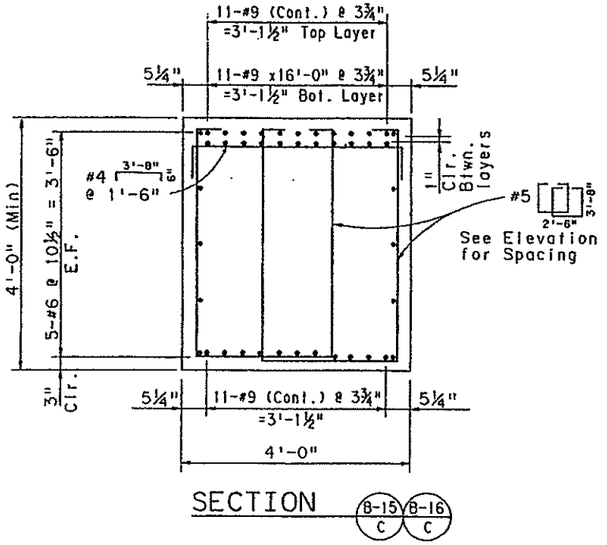

SECTION B-15 C / B-16 C

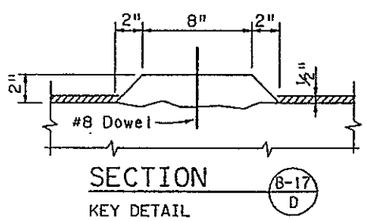

SECTION B-17 D

KEY DETAIL

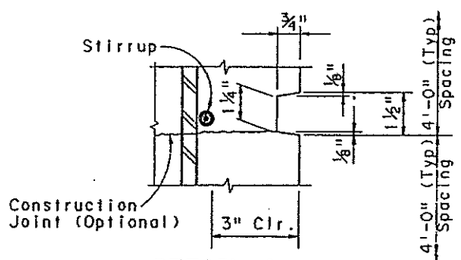

DETAIL A

Rustication joints shall be horizontal with the first rustication located 4'-0" below the lowest point of the pier cap at the outside edge. Adjacent piers on the same structure shall utilize rustication at the same elevation.

Note: Longitudinal #9 bars in the Pier Cap shall be spliced together Vertically (one above the other). The minimum lap length shall be 9'-3". The 11-#9x16'-0" in the Bottom Layer of the Top Reinforcement in the Cantilever shall be placed 2" from the Cantilever end and extend over the column. A-1

INITIAL	DATE	
Designed By	JHP	8-89
Checked By	AEG	8-89
Detailed By	AEG	8-89
Checked By	AEG	9-89
Quantities By	JHP	9-89
Checked By	GNT	9-89

SY24::: 05A3:1174.1741S|PRD0121.90M

DIVISION OF HIGHWAYS

I-25 OVER SH 470/E-470

PIER #2 SECTION & DETAILS

E-470

Engineer 470 Partnership

Designer J. Peck		Structure Numbers	F-17-JU
Detailer A. Griffith			F-17-JV
Drawing Number	B-17	of	31 Drawings

PIER # 2 TYP SECTION & DETAIL

SIPRD0121.90

AS CONSTRUCTED									
NO REVISIONS		REVISED		VOID					

FEDERAL ROAD REGION NO.	DIVISION	PROJECT NUMBER	SHEET NUMBER
VIII	COLORADO	1A02	37

REVISIONS		
10- 5-89	NOTES	AEG
- -		
- -		

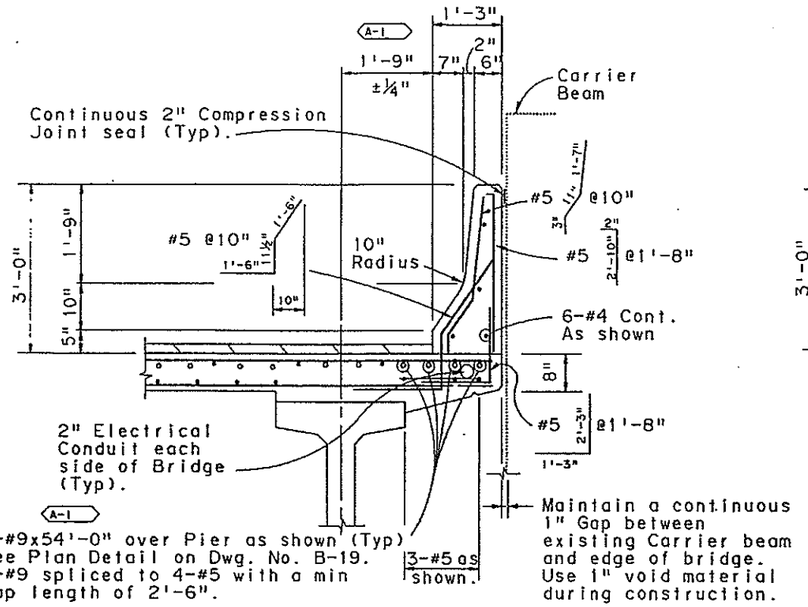

SECTION AT BRIDGE RAIL TYPE 4 (SPECIAL)

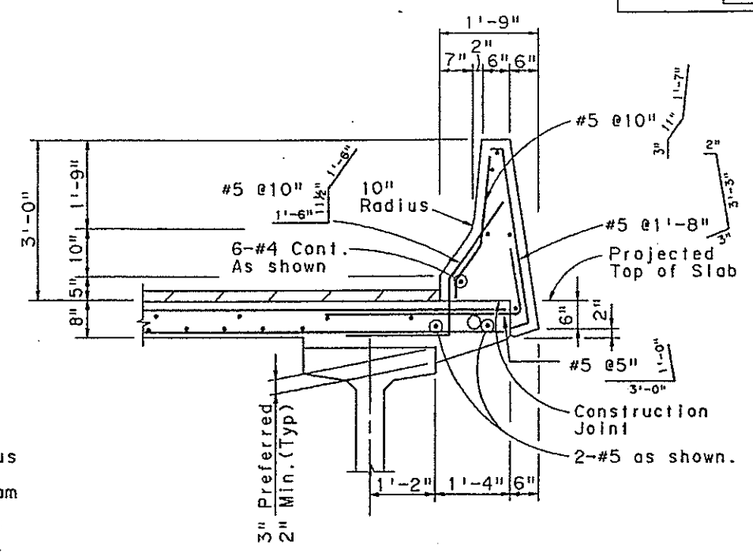

SECTION AT BRIDGE RAIL TYPE 4 (470)

Note: For additional reinforcing over piers, see Plan Detail on Dwg. No. B-19 & Deck Drain Details Dwg. No. B-24 & B-25.

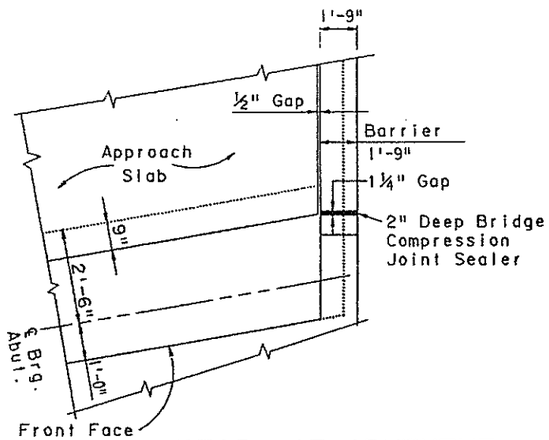

DETAIL AT ABUTMENT

See Details on Dwg. No. B-12.

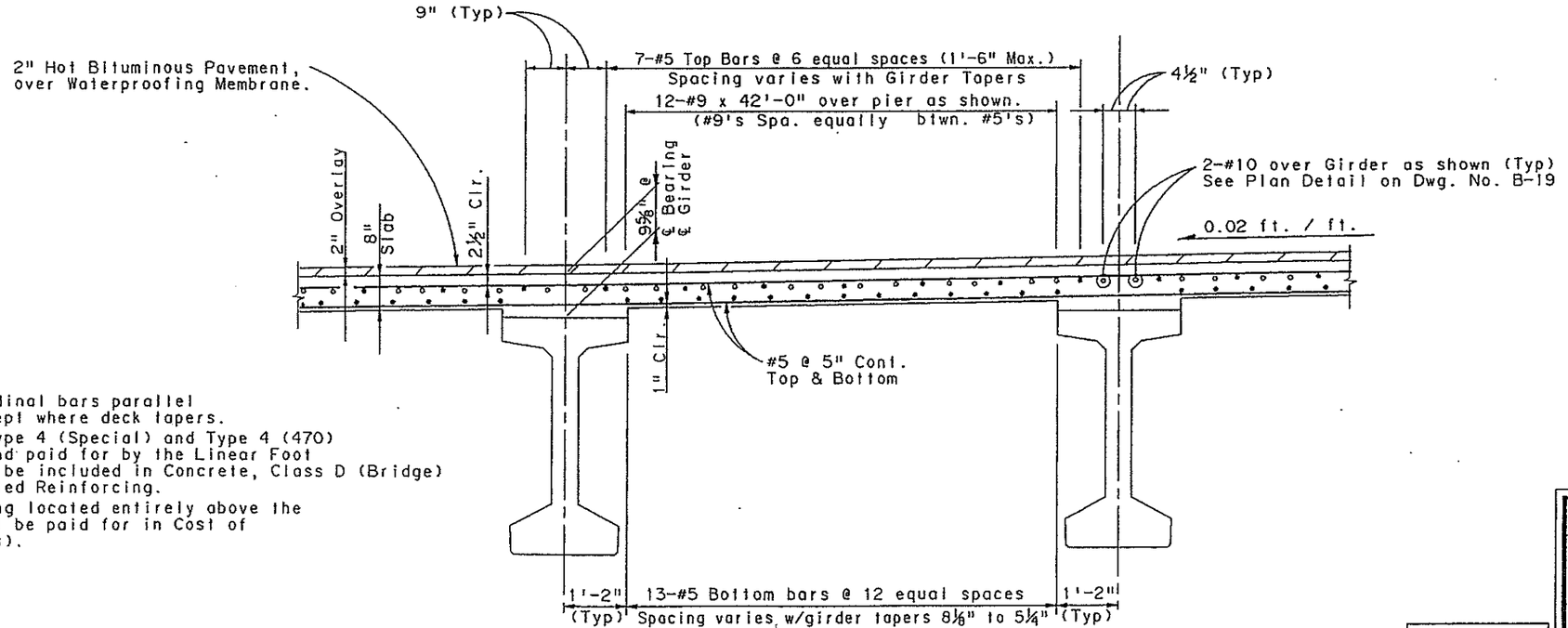

SECTION AT TYPICAL GIRDER BAY

Note: Place longitudinal bars parallel to ℄ I-25 except where deck tapers.
Bridge Rail Type 4 (Special) and Type 4 (470) is measured and paid for by the Linear Foot and shall not be included in Concrete, Class D (Bridge) and Epoxy-coated Reinforcing.
The Reinforcing located entirely above the top slab shall be paid for in Cost of Bridge Rail (s).

	INITIAL	DATE
Designed By	AEG	8-89
Checked By	JAP	8-89
Detailed By	GMC	8-89
Quantities By	JAP	8-89
Checked By	GNF	8-89

SY24:: DSA3:1174_1741S10K50111.90N

DIVISION OF HIGHWAYS

I-25 OVER SH 470/E-470 DECK REINFORCEMENT AND BRIDGE RAIL DETAILS

Designer A. Griffith	Structure Numbers	F-17-JU
Detailer G Christinacht		F-17-JV
Drawing Number B-18	of 31	Drawings

E-470 Engineer 470 Partnership

AS CONSTRUCTED					
NO REVISIONS		REVISED		VOID	

FEDERAL ROAD REGION NO.	DIVISION	PROJECT NUMBER	SHEET NUMBER
VIII	COLORADO	1A02	38

REVISIONS		
- -		
- -		
- -		

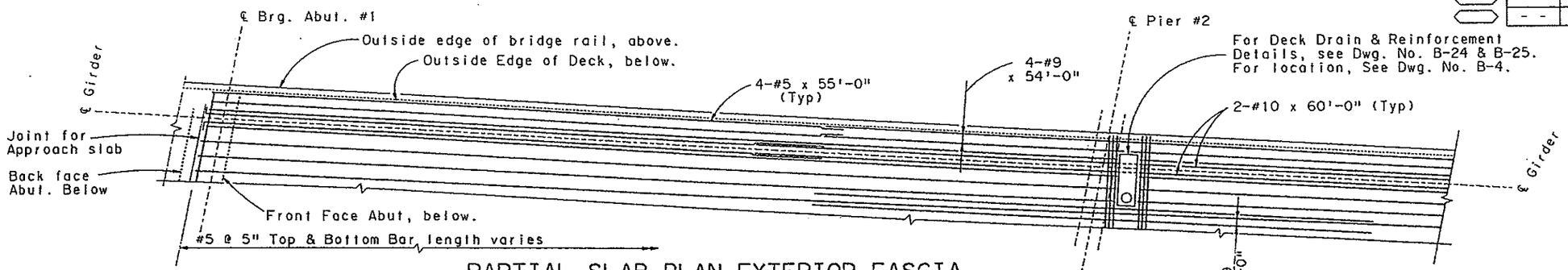

PARTIAL SLAB PLAN EXTERIOR FASCIA

Structure No. F-17-JV (NB) Shown,
Structure No. F-17-JU (SB) Similar

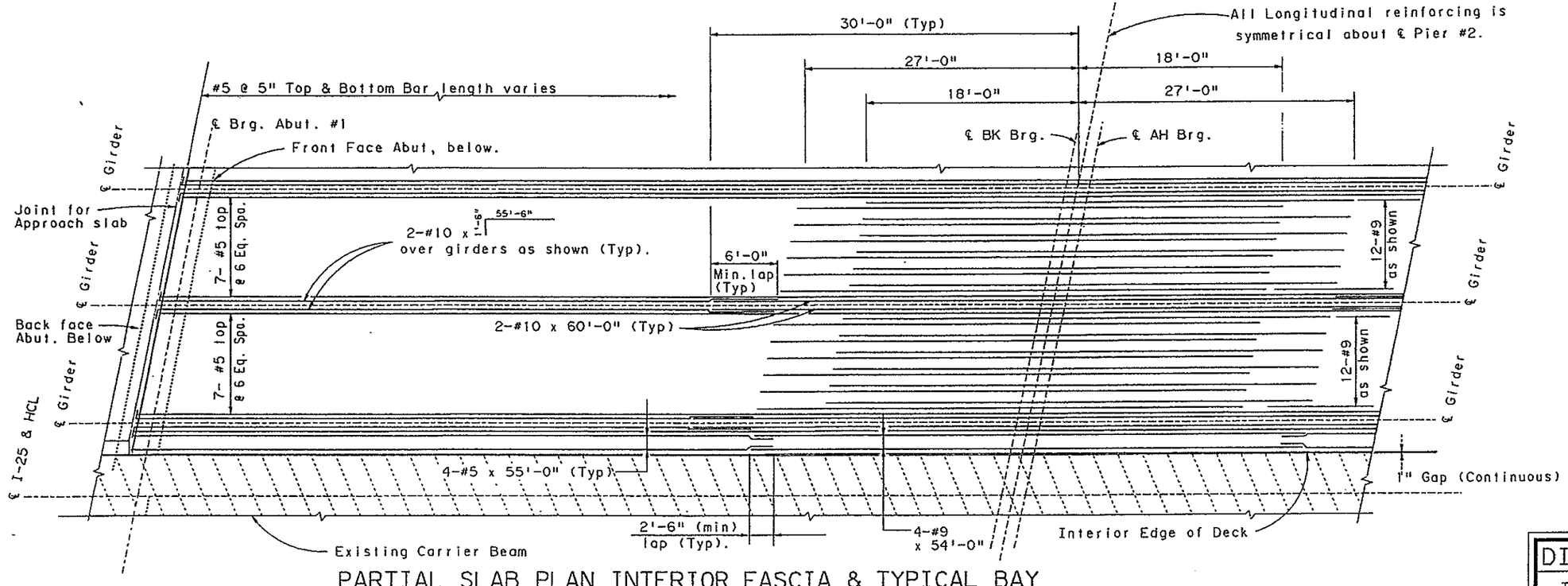

PARTIAL SLAB PLAN INTERIOR FASCIA & TYPICAL BAY

Structure No. F-17-JV (NB) Shown,
Structure No. F-17-JU (SB) Similar

NOTE:
1. Bottom Longitudinal reinforcing not shown here, see Section, Dwg. No. B-18.
2. Stop Top & Bottom transverse slab reinforcing 2" from end of joint for Approach Slab, see Diaphragm Details Dwg. No. B-20.
3. Place Transverse reinforcing parallel to ℄ Brg. of Abutments and continuous over pier, except as shown in Section on Dwg. No. B-23.
4. 2" ø Conduits not shown here, see Dwg. No. B-4 & B-18 for location.
5. See Reinforcing for Bridge Rail Type 4 (470) & Bridge Rail Type 4 (Special), Details on Dwg. No. B-18.

	INITIAL	DATE			
Designed By	AEG	8-89	Checked By	AEG	9-89
Checked By	JHP	8-89	Quantities By	JHP	9-89
Detailed By	AEG	8-89	Checked By	AEG	9-89

E-470
Engineer 470 Partnership

DIVISION OF HIGHWAYS
I-25 OVER SH 470/E-470
DECK REINFORCMENT DETAILS

Designer A. GRIFFITH	Structure Numbers	F-17-JU	
Detailer A. GRIFFITH		F-17-JV	
Drawing Number B-19	of 31	Drawings	

DECK REINFORCING DETAIL SHEET
SIDKS0221.90N

AS CONSTRUCTED		
NO REVISIONS	REVISED	VOID

FEDERAL ROAD REGION NO.	DIVISION	PROJECT NUMBER	SHEET NUMBER
VIII	COLORADO	1A02	39

REVISIONS		
10- 5-89	NOTES	AEG
- -		
- -		

INITIAL	DATE			
Designed By AEG	8-89	Checked By	AEG	9-89
Checked By JHP	8-89	Quantities By	JHP	9-89
Detailed By AEG	8-89	Checked By	GNT	9-89

PLAN

ELEVATION

ABUTMENT #1 SHOWN
ABUTMENT #3 SIMILAR

END CONCRETE DIAPHRAGM SECTION

ABUTMENT #1 SHOWN
ABUTMENT #3 SIMILAR

NOTE: Rubber Sheeting and Joint Filler will not be paid for separately but shall be included in the work.

J = 6"x6"x4" Junction Box. Drain for Condensation.

E-470
Engineer 470 Partnership

DIVISION OF HIGHWAYS

I-25 OVER SH 470/E-470
ABUTMENT DIAPHRAGM
DETAILS

Designer A. GRIFFITH	Structure Numbers	F-17-JU
Detailer A. GRIFFITH		F-17-JV
Drawing Number B-20 of 31 Drawings		

ABUTMENT DIAPH. DETAIL

SY24: OSA3 1174.1741SISSM0111 90N

AS CONSTRUCTED					
NO REVISIONS		REVISED		VOID	

FEDERAL ROAD REGION NO.	DIVISION	PROJECT NUMBER	SHEET NUMBER
VIII	COLORADO	1A02	40

REVISIONS		
- -		
- -		
- -		

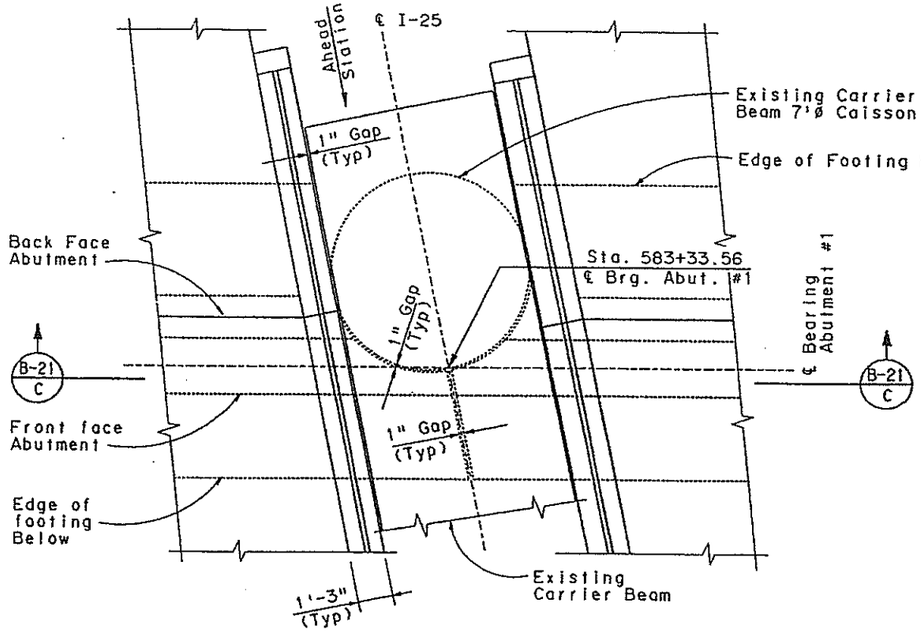

PLAN - ABUTMENT #1 AT CARRIER BEAM

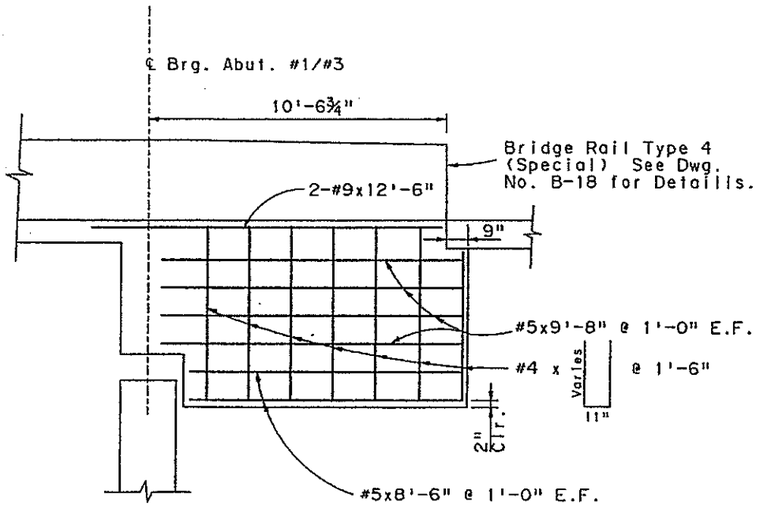

SECTION B-21 B / B-22 B

Taken parallel ℄ I-25

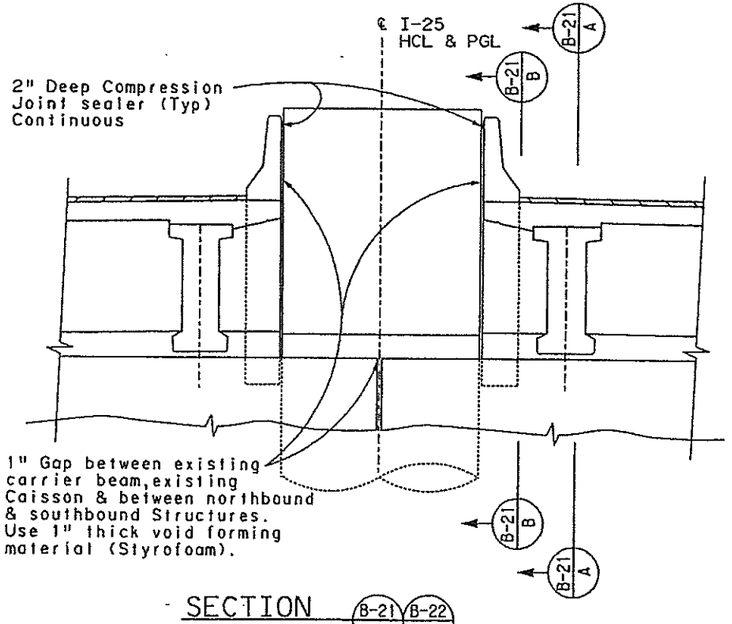

SECTION B-21 C / B-22 C

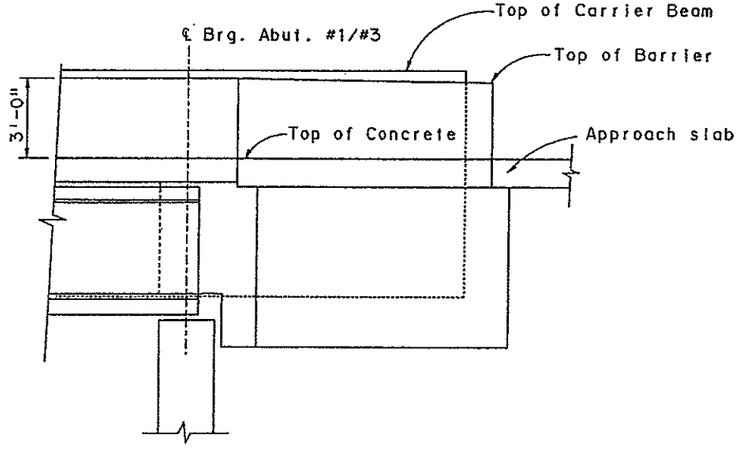

SECTION B-21 A

NOTES:

1. All Carrier Beam Wingwall concrete is Concrete, Class D (Bridge).
2. 1 Inch Void forming material (Styrofoam) shall be included in the work, and shall not be paid for separately.

	INITIAL	DATE	Checked By	JHP	9-89
Designed By	JHP	7/89		AEG	9-89
Checked By	AEG	7/89	Quantities By	JHP	9-89
Detailed By	GMC	7/89	Checked By	GNT	9-89

E-470
Engineer 470 Partnership

DIVISION OF HIGHWAYS

I-25 OVER SH 470/E-470 ABUTMENT #1

CARRIER BEAM WINGWALL

Designer J. Peck	Structure Numbers	F-17-JU	
Detailer G.Christnacht		F-17-JV	
Drawing Number B-21	of 31	Drawings	

S724:: 05A3:1174,1741SICBW0121.90K

AS CONSTRUCTED					
NO REVISIONS		REVISED		VOID	

FEDERAL ROAD REGION NO.	DIVISION	PROJECT NUMBER	SHEET NUMBER
VIII	COLORADO	1A02	41

REVISIONS		
- -		
- -		
- -		

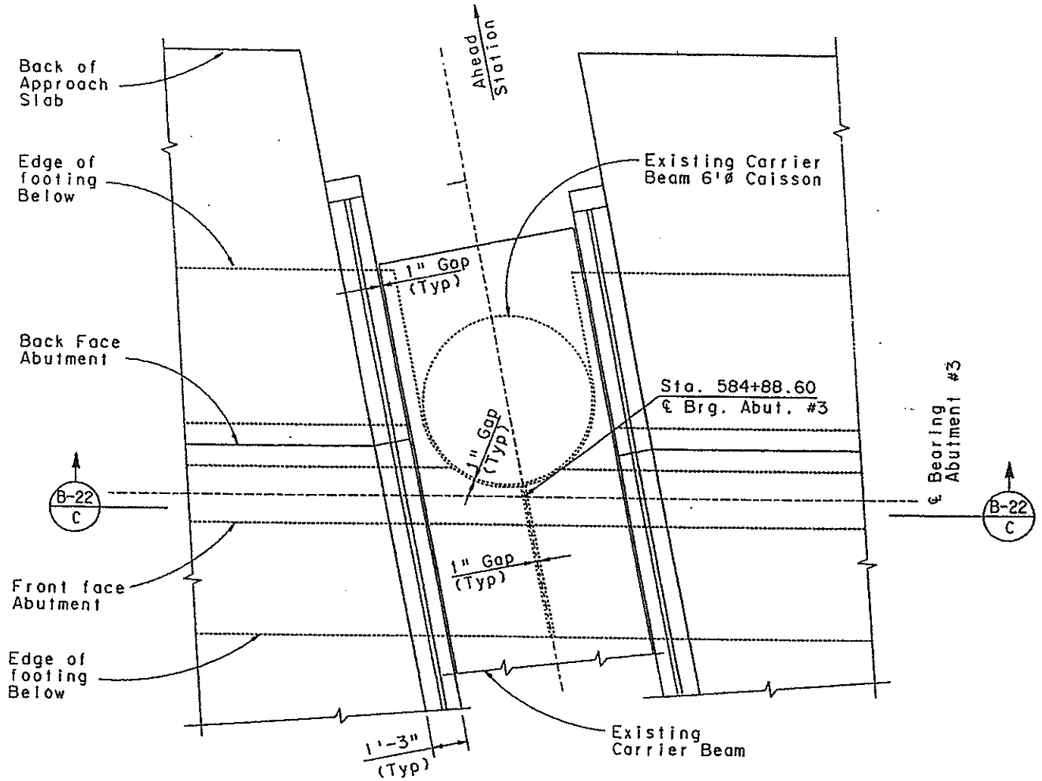

PLAN - ABUTMENT #3 AT CARRIER BEAM

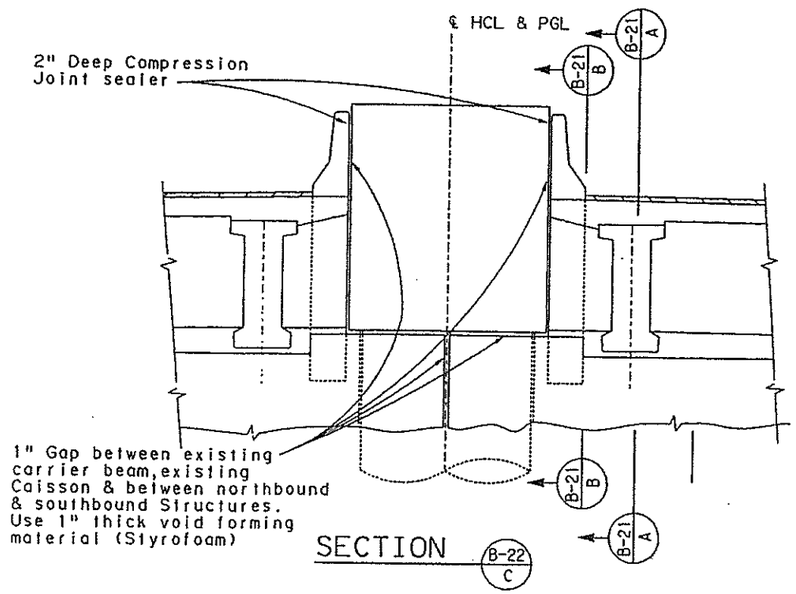

SECTION B-22 C

	INITIAL	DATE
Designed By	JHP	6-99
Checked By	AEG	8-99
Detailed By	GMC	8-99

Checked By	JHP	9-99
Quantities By	JHP	9-99
Checked By	GMT	9-99

SY24:: OSA3:1174.1741SICBW0221.90K

E-470
Engineer 470 Partnership

DIVISION OF HIGHWAYS

I-25 OVER SH 470/E-470
ABUTMENT #3
CARRIER BEAM WINGWALL

Designer J. Peck		Structure Numbers	F-17-JU
Detailer G.Christnacht			F-17-JV
Drawing Number	B-22	of	31 Drawings

AS CONSTRUCTED			
NO REVISIONS	REVISED	VOID	

FEDERAL ROAD REGION NO.	DIVISION	PROJECT NUMBER	SHEET NUMBER
VIII	COLORADO	1A02	42

REVISIONS	
- -	
- -	
- -	

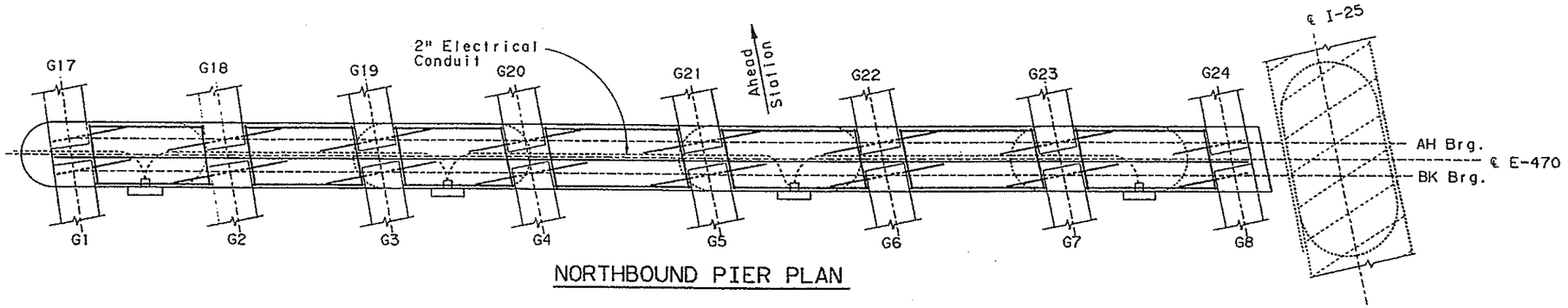

NORTHBOUND PIER PLAN

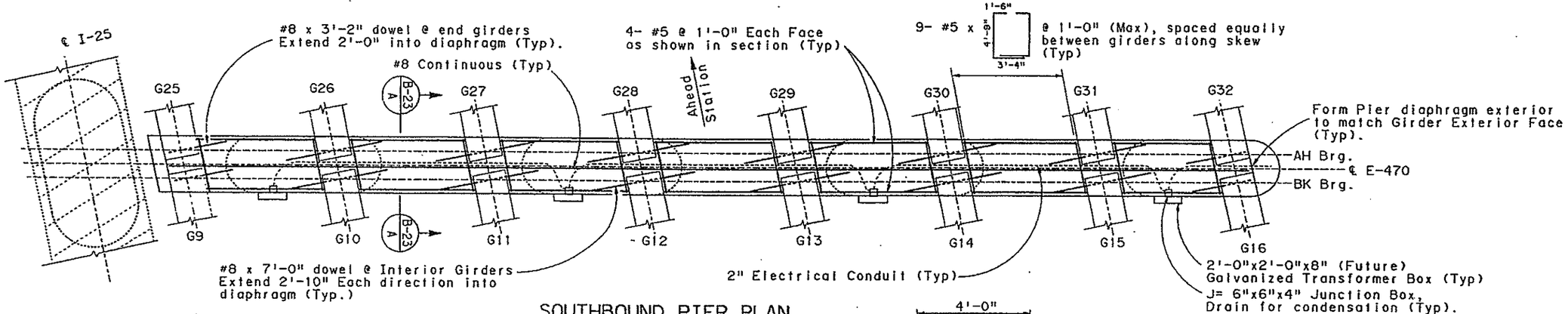

SOUTHBOUND PIER PLAN

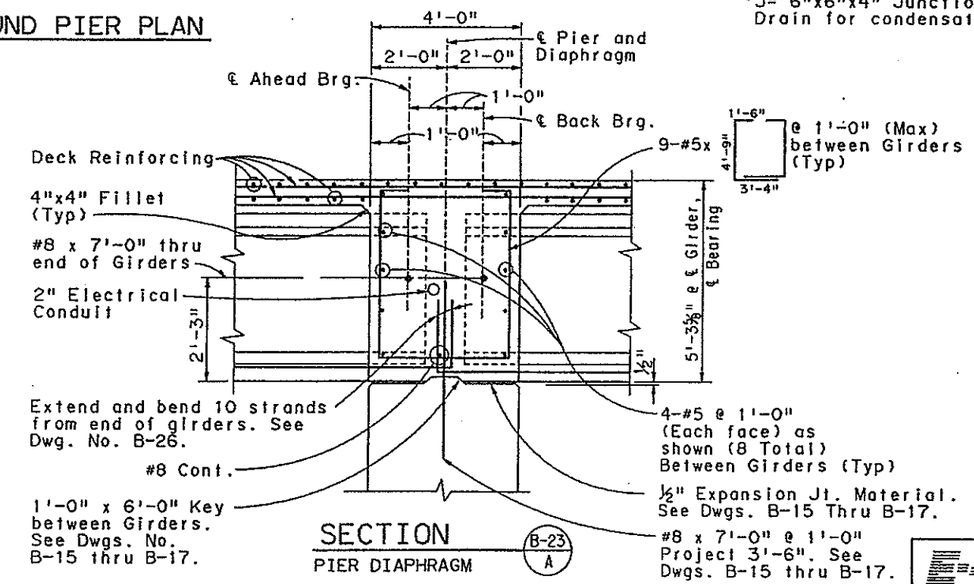

SECTION B-23 A

PIER DIAPHRAGM

NOTE:

NOTES:

1. Pour Diaphragm Concrete monolithic with the deck.
2. 2'-0"x2'-0"x8" (Future) Galvanized Transformer box for lighting at columns shall be placed adjacent to 6"x6"x4" junction Box. Drill and epoxy grout a minimum of four ¾" ø Anchor Bolts as required.
   Work this sheet with Dwg. No. B-4 & B-17, for junction and transformer box details, and location of ¾" Electrical Conduit.

	INITIAL	DATE			
Designed By	AEG	8-89	Checked By	AEG	9-89
Checked By	JHP	8-89	Quantities By	JHP	9-89
Detailed By	GMC	8-89	Checked By	GNT	9-89

SY24:: OSA3:(174,174)SIDIA0121.90R

E-470

Engineer 470 Partnership

DIVISION OF HIGHWAYS

I-25 OVER SH 470/E-470
PIER DIAPHRAGM DETAILS

Designer A. Griffith	Structure Numbers	F-17-JU	
Detailer G.Christnacht		F-17-JV	
Drawing Number B-23	of 31	Drawings	

PIER #2 DIAPH. DETAIL

SIDIA0121.90

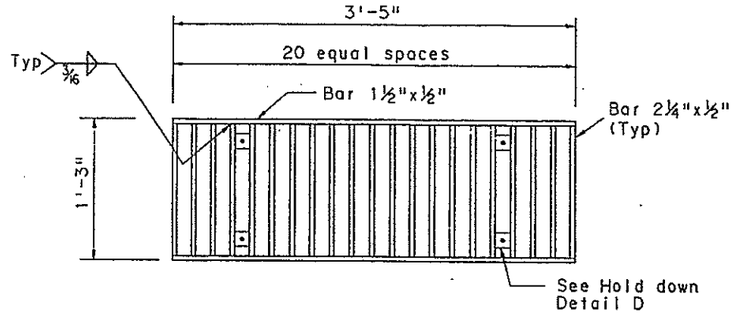

GRATING PLAN

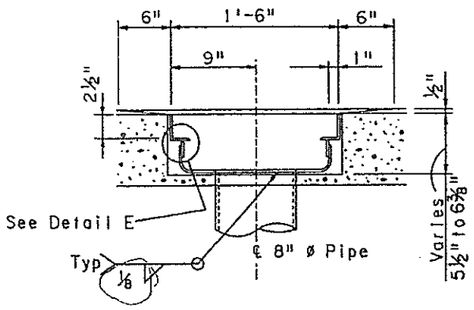

SECTION A-A

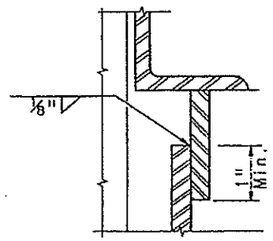

DETAIL E

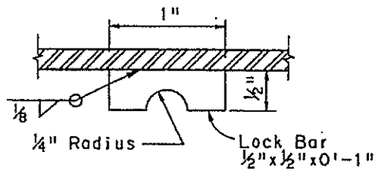

LOCK BAR DETAIL F

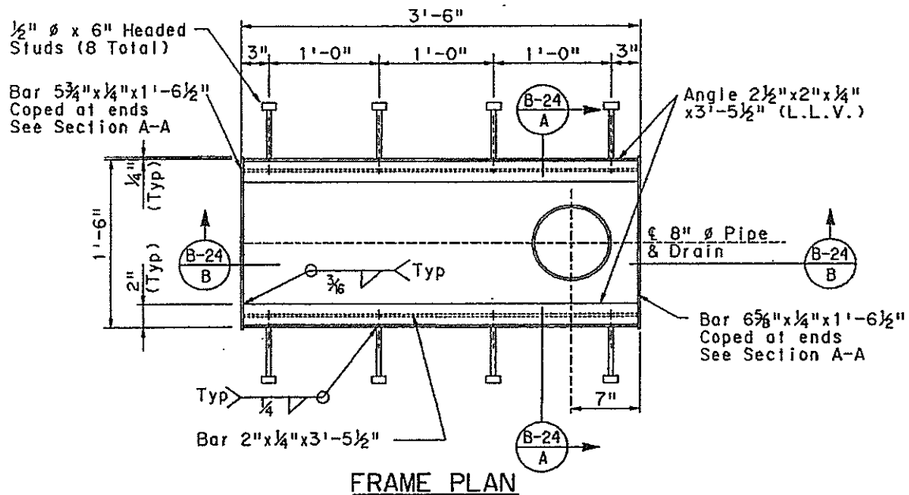

FRAME PLAN

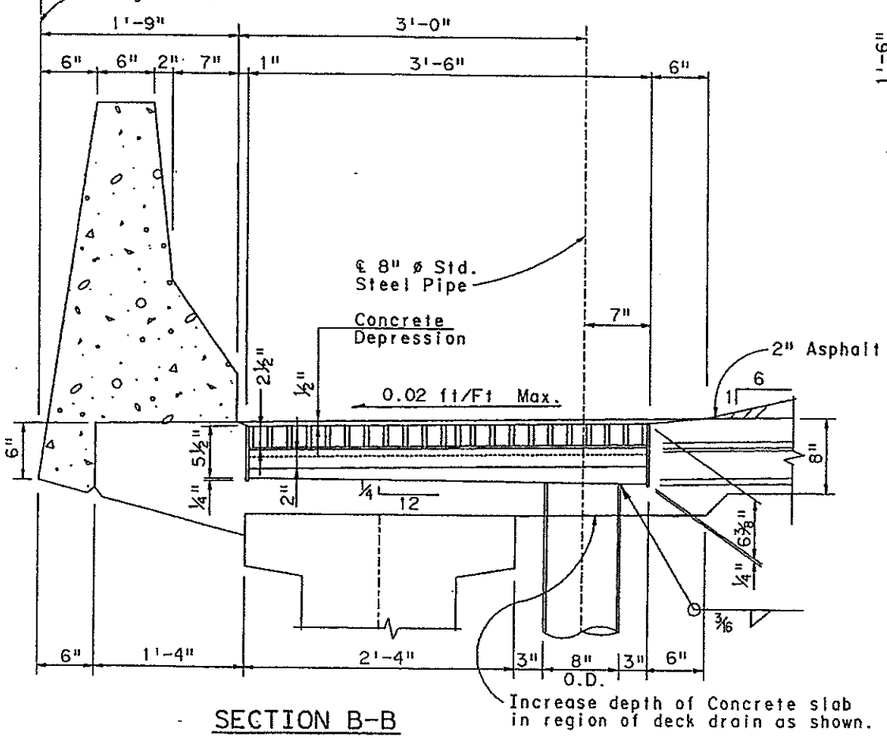

SECTION B-B
FABRICATED DECK DRAIN

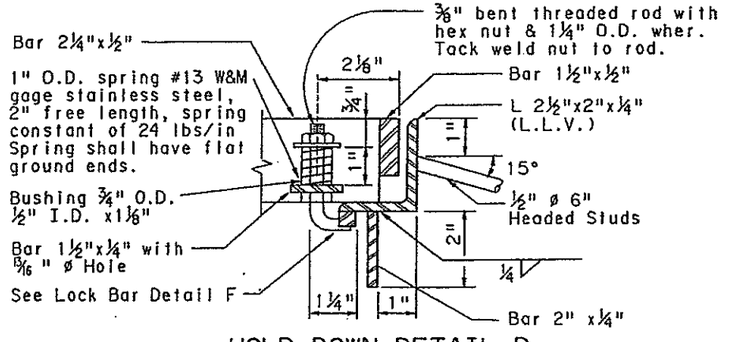

HOLD DOWN DETAIL D

AS CONSTRUCTED					
NO REVISIONS		REVISED		VOID	

FEDERAL ROAD REGION NO.	DIVISION	PROJECT NUMBER	SHEET NUMBER
VIII	COLORADO	1A02	43

REVISIONS			
- -			
- -			
- -			

NOTES:

1. All pipes to be 8"x 0.322 welded steel pipe, ASTM A53 Grade B, except as noted. Fittings and bends shall have a minimum wall thickness of ¼".
2. All pipes shall be supported at 6'-0" max. spacing as shown in Detail on Drawing No. B-25.
3. All joints and/or connections shall be butt-welded or connected by a pipe sleeve and shall be smooth throughout inside of pipe.
4. All bends shall be on a 2'-6" minimum radius measured along centerline of pipe. All bends shall be smooth.
5. Fabricated deck drains, 8" diameter pipes, and pipe supports shall be galvanized after fabrication.
6. All steel plates, bars and shapes shall conform to ASTM A36 unless otherwise noted. All anchor bolts shall conform to ASTM A307.
7. All galvanized metal surfaces to be painted shall be blast cleaned and chemically treated as indicated in the specifications.
8. All visible metal surfaces for bridge drains and 8" diameter pipes shall be painted to match existing concrete surfaces.
9. Paint shall be a two-coat urethane system, or an epoxy mastic-urethane system as indicated in the specifications.
10. It is estimated 100 L.F. of drain pipe will be required at Pier #2. All work and materials to be paid for under Item 513, Bridge Drain (8-Inch).

	INITIAL	DATE	
Designed By	AEG	7-89	Checked By
Checked By	JHP	9-89	Quantities By
Detailed By	GMC	7-89	Checked By

Checked By	9-89	AEG	9-89
Quantities By	9-89	JHP	9-89
Checked By	9-89	GNT	9-89

SY24:: OSA3:[174.174]SIDRAIN1.90X

DIVISION OF HIGHWAYS

I-25 OVER SH 470/E-470
DECK DRAIN DETAILS

E-470
Engineer 470 Partnership

Designer A. Griffith		Structure Numbers	F-17-JU
Detailer A. Griffith			F-17-JV
Drawing Number	B-24	of	31 Drawings

DECK DRAIN DETAILS

AS CONSTRUCTED					
NO REVISIONS		REVISED		VOID	

FEDERAL ROAD REGION NO.	DIVISION	PROJECT NUMBER	SHEET NUMBER
VIII	COLORADO	1A02	44

REVISIONS			
A-1	10-5-89	DIMENSIONS	AEG
	- -		
	- -		

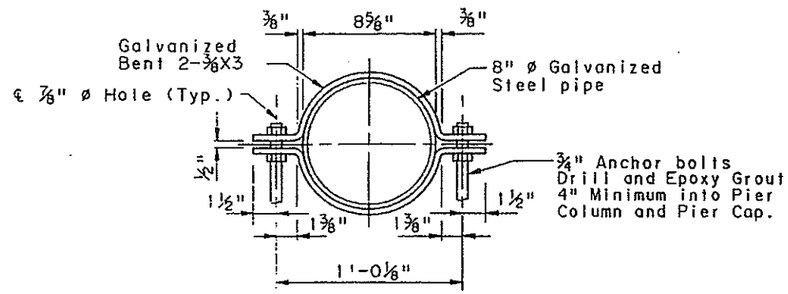

DRAIN PIPE CLAMP DETAIL

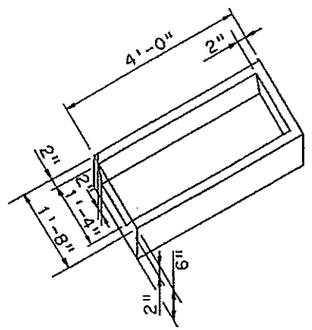

CONCRETE SPLASH BLOCK DETAIL

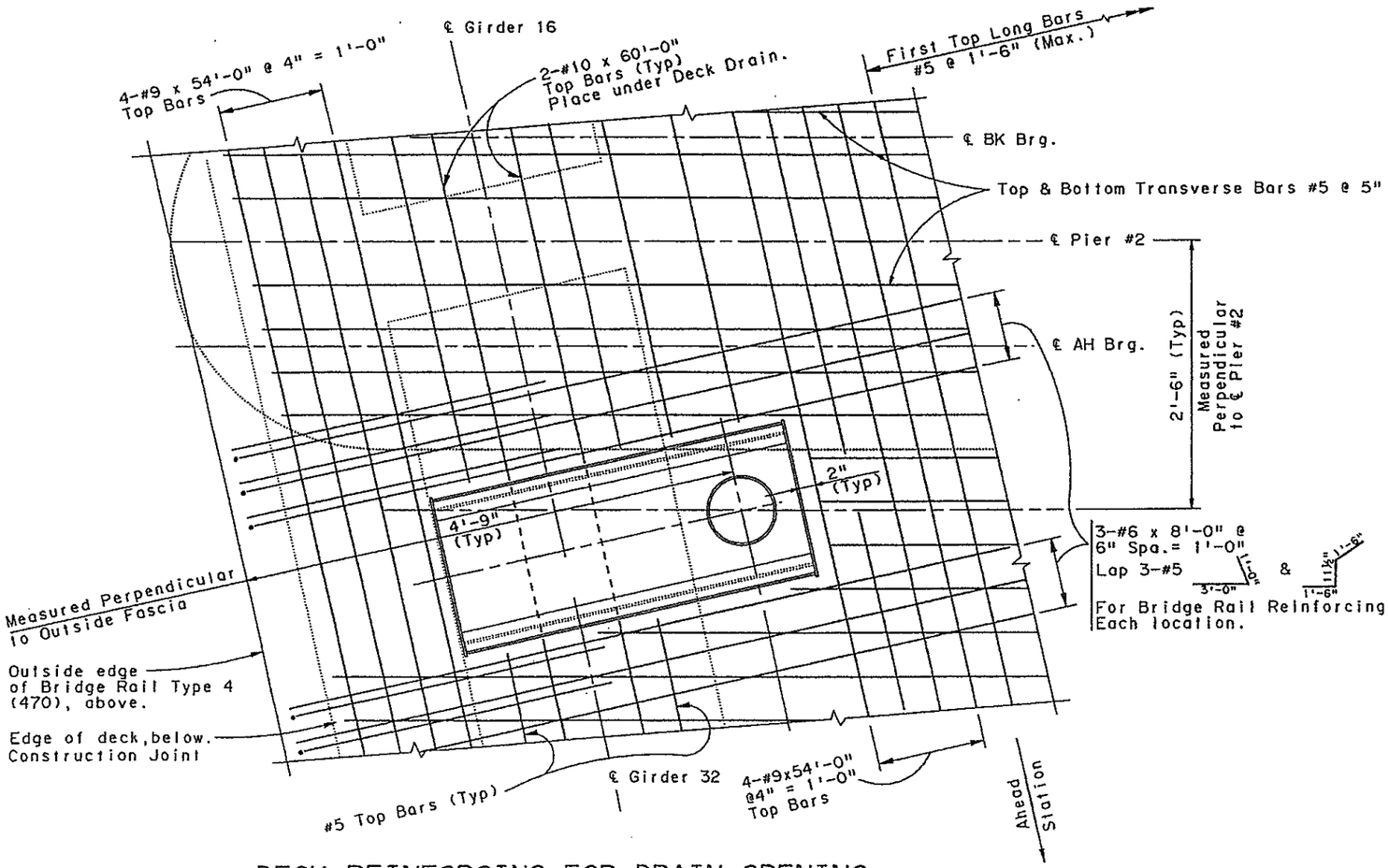

DECK REINFORCING FOR DRAIN OPENING

Partial plan of Pier # 2 Str. No. F-17-JU (SB) Shown,
Str. No. F-17-JV (NB) Similar - Opposite Hand.
This sheet used in Conjunction with Dwg. No. B-18 &.B-19.
Longitudinal Bottom Bars not shown for clarity.

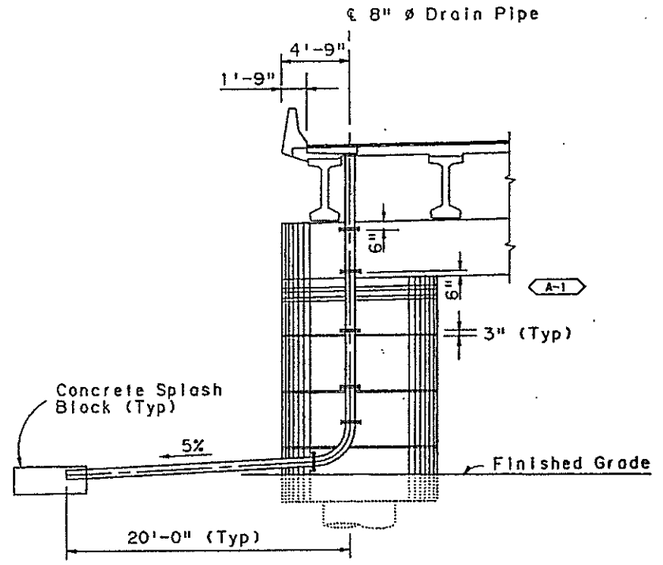

DECK DRAIN DETAIL

Pier #2 Str. No. F-17-JU (SB) Shown
Pier #2 Str. No. F-17-JV (NB) Similar

NOTES:

1. Locate Pipe clamp anchor bolts 3" above rustication joints, 6" below top of pier cap, and at both ends of elbow
2. Use 2'-6" Radius for elbow.
3. Extend pipe 20 ft. parallel to ℄ E-470 for Str. No. F-17-JU (SB) and extend pipe 20 ft. perpendicular to ℄ E-470 for Str. No. F-17-JV (NB) towards True South.

INITIAL	DATE	
Designed By	AEG	8-89
Checked By	JHP	8-89
Detailed By	AEG	8-89
Checked By	JHP	9-89
Quantities By	JHP	9-89
Checked By	GNT	9-89

DIVISION OF HIGHWAYS

I-25 OVER SH 470/E-470
DECK DRAIN DETAILS

E-470
Engineer 470 Partnership

Designer GRIFFITH		Structure Numbers	F-17-JU
Detailer GRIFFITH			F-17-JV
Drawing Number	B-25 of 31 Drawings		

AS CONSTRUCTED							
NO REVISIONS		REVISED		VOID			

FEDERAL ROAD REGION NO.	DIVISION	PROJECT NUMBER	SHEET NUMBER
VIII	COLORADO	1A02	45

REVISIONS			
A-1	10-5-89	CAMBERS & NOTES	AEG
	- -		
	- -		

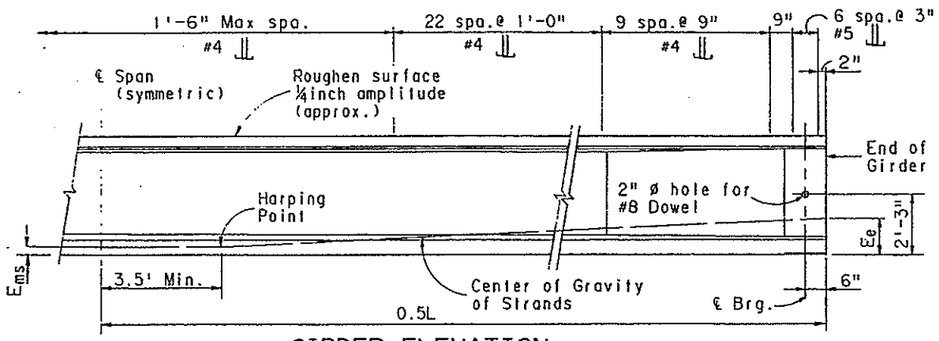

GIRDER ELEVATION

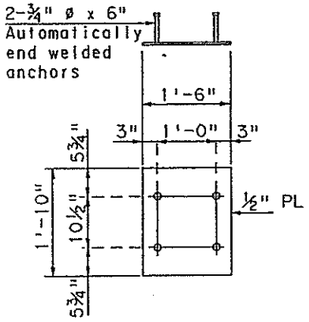

END PLATE DETAIL

Galvanize after fabrication.

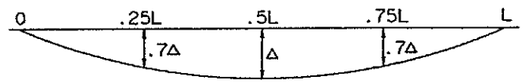

DEAD LOAD DEFLECTION DIAGRAM

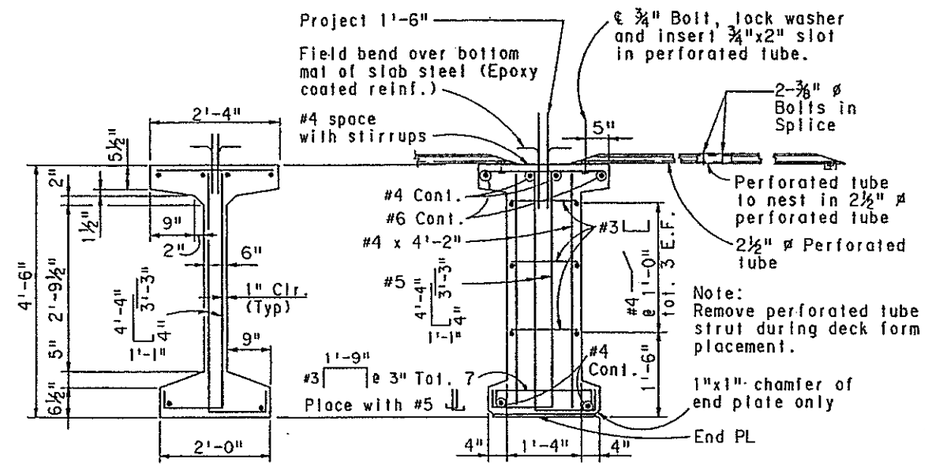

THROUGH MID-SPAN THROUGH END PLATE

TYPICAL GIRDER SECTIONS

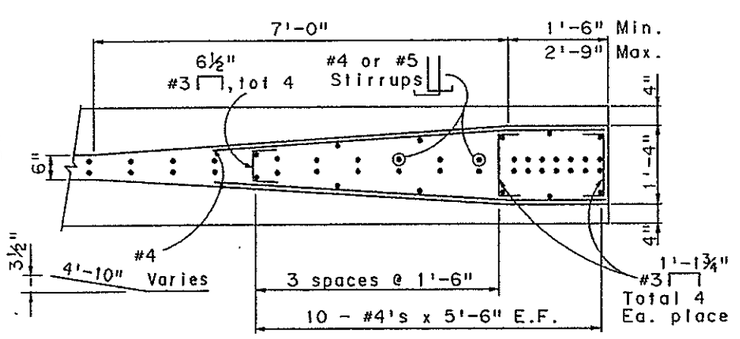

SECTION THRU END BLOCK

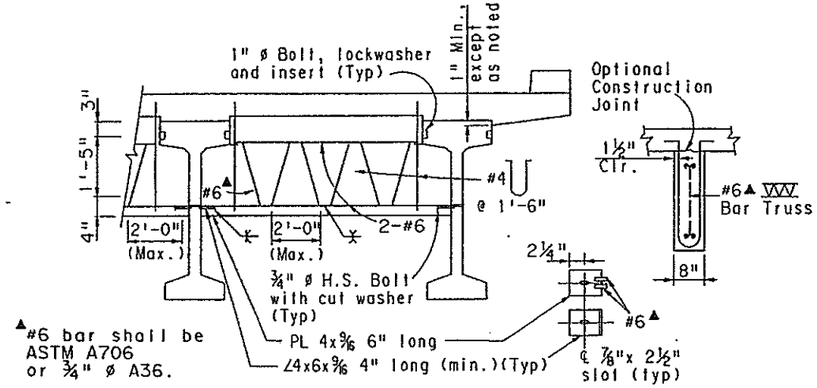

▲#6 bar shall be ASTM A706 or ¾" ø A36.

INTERMEDIATE DIAPHRAGM DETAILS

For location of diaphragms, See framing plans.

GIRDER SCHEDULE A-1

Span No.	Girder No.	L (Ft.)	As# (Square Inch)	Ems (Inch)	Ee (Inch)	Fi (KIPS)	Ff (KIPS)	Concrete Strength f'ci (PSI)	Concrete Strength f'c (PSI)	Δ (Inch)	Expected Camber (Inch)
1	G1	76'-9"	4.590	2.98	17.25	892	675	4610	5500	0.76	1.368
1	G2	76'-11⅝"	4.590	2.98	17.25	892	675	4610	5500	0.76	1.368
1	G3	76'-2⅝"	4.590	2.98	17.25	892	675	4610	5500	0.76	1.368
1	G4-15	77'-6"	4.590	2.98	17.25	892	675	4610	5500	0.76	1.368
1	G16	77'-10"	4.590	2.98	17.25	892	675	4610	5500	0.76	1.368
2	G17	76'-9"	4.590	2.98	17.25	892	675	4610	5500	0.76	1.368
2	G18	76'-11⅝"	4.590	2.98	17.25	892	675	4610	5500	0.76	1.368
2	G19	77'-2⅝"	4.590	2.98	17.25	892	675	4610	5500	0.76	1.368
2	G20-31	77'-6"	4.590	2.98	17.25	892	675	4610	5500	0.76	1.368
2	G32	77'-10"	4.590	2.98	17.25	892	675	4610	5500	0.76	1.368

NOTES:

All work necessary to fabricate and install the integral parts of the girder (including the #6 Bar Truss, and elastomeric leveling and bearing pads) as shown on the plans shall be included in the bid price for Item No. 618, Prestressed Concrete Unit.

When approved by the Engineer a minimum of tack welding will be permitted on ASTM A706 uncoated reinforcing steel.

Reinforcing projecting from the top of the girder and reinforcing within 8 feet of an expansion device in the bridge deck shall be epoxy coated. Damaged coating on girder reinforcing need not be repaired.

At girder ends not embedded in concrete diaphragms, cut strands off 1" below the surface of the concrete and finish with an approved epoxy grout. At girder ends embedded in concrete diaphragms, cut strands to project 3 In. Do not make cosmetic repairs (damage less than 1½" deep) to the parts of the girders embedded in concrete.

Use ½"ø f's=270 KSI low relaxation strands meeting the requirements of ASTM A416 grade 270. Alternate strands are ½"ø stress relieved strands meeting the requirements of ASTM A416 grade 270. If stress relieved strands are used, the jacking force and initial concrete strengths shall be adjusted as appropriate to provide the final force (F_f) shown. The fabricator shall include design calculations with the shop plans.

The minimum distance between groups or individual strands shall be 1¾" (measured between centers of adjacent strands). The minimum cover for prestressing steel is 1½".

A minimum of two harping points shall be used per girder.

A_s* is the minimum area of the prestressing steel.
f'_s is the ultimate strength of the prestressing steel.
F_i is the jacking force per girder including all losses.
F_f is the final force per girder after all losses.
f'_{ci} is the required concrete strength at release of prestress force.
f'_c is the required concrete strength at 28 days of age.
Δ is the deflection at centerline of span due to cast-in-place slab, diaphragms, asphalt, curbs, rails and walks.

Concrete shall be Class S.

Entrained air is not required for girder concrete.

End blocks shall be used on all girders unless otherwise noted.

Use ½" chamfer on all corners, except as noted.

Expected camber is projected to 90 days girder age. If girders, deck forms and reinforcing will not be placed before that girder age; weights, temporary tensioning, or others means approved by the Engineer shall be used to limit camber growth. Prior to deck pour, measure and report to Engr. Bridge Design cambers exceeding the expected camber by more than 1½".

Use and installation of the #6 Bar Truss shall not relieve the Contractor of its full responsibility to construct the work in a manner which provides all necessary rigidity, supports all loads imposed, and provides in the finished structure the lines and grades indicated on the plans.

No girders shall be erected and left unbraced. The #6 Bar truss shall be connected to the adjacent girders simultaneously with erection of the girders.

For girders passing over traffic the #6 Bar Truss shall be connected to the girders prior to the release of the erection equipment.

The Contractor is responsible for determining necessary bracing requirements, and for providing adequate bracing for the specific wind and weather conditions to be encountered for each specific project.

10 Strands to be turned up at Pier Diaphragm, extend 3'-0" at Piers.

INITIAL	DATE
Designed By GNT	
Checked By AEG	8-89
Detailed By GMC	8-89
Checked By GNT	9-89
Quantities By JHP	9-89
Checked By JHP	9-89

DIVISION OF HIGHWAYS

I-25 OVER SH 470/E-470

COLORADO G54 GIRDER

E-470

Engineer 470 Partnership

Designer G. Tsiouvaras		Structure Numbers	F-17-JU
Detailer G Christinachi			F-17-JV
Drawing Number	B-26	of 31	Drawings

AS CONSTRUCTED					
NO REVISIONS		REVISED		VOID	

FEDERAL ROAD REGION NO.	DIVISION	PROJECT NUMBER	SHEET NUMBER
VIII	COLORADO	1A02	46

REVISIONS		
- -		
- -		
- -		

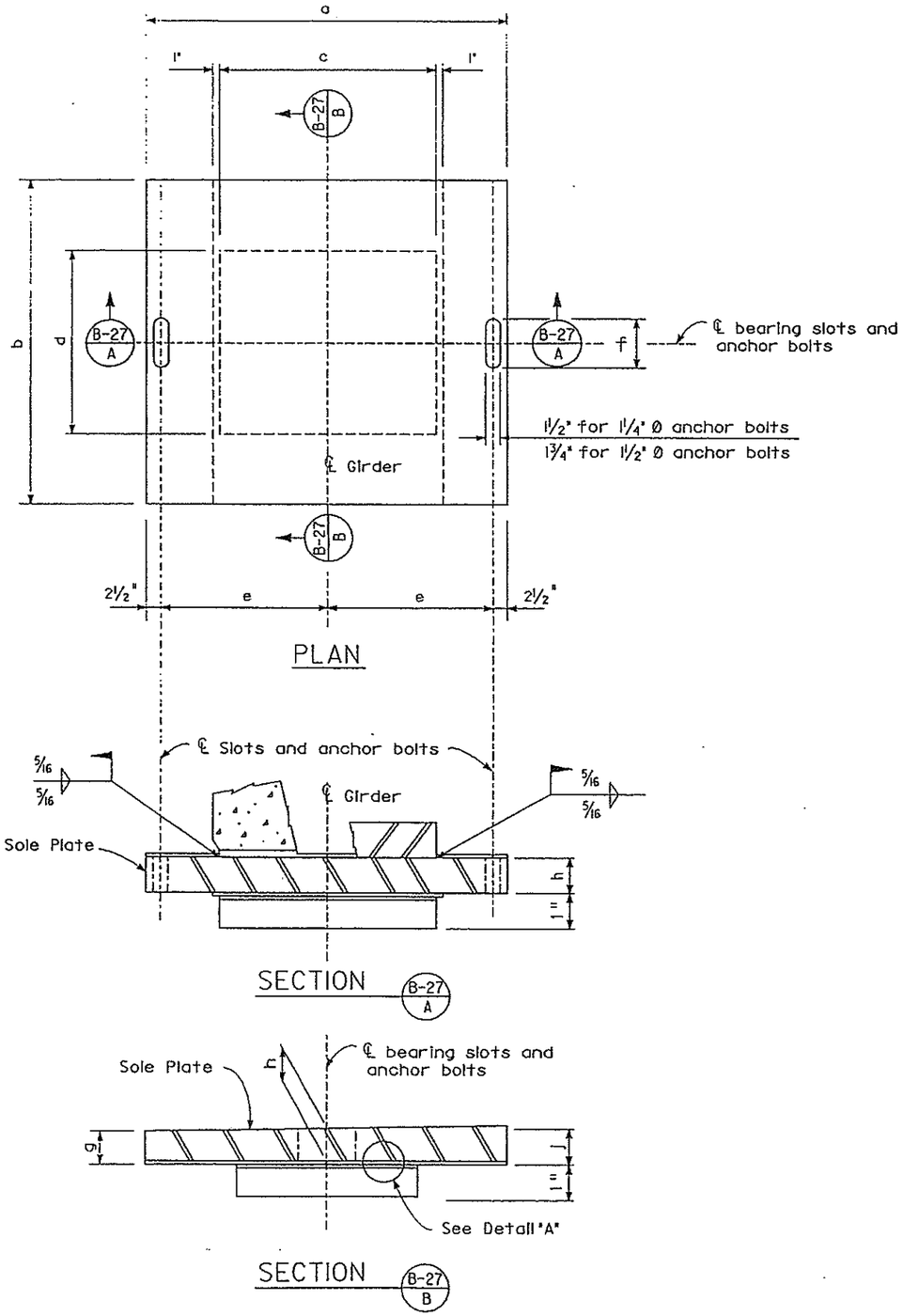

NOTES:

The centerlines of the upper and lower elements of the expansion bearings shall be aligned with the centerlines of the anchor bolts and girder at a mid-point temperature of 40°. The upper element only shall be adjusted, in relation to the fixed bearing, for each 10° temperature change. Adjust away from the fixed bearing one 10° temperature increment for each 10° change above 40° and toward the fixed bearing for each 10° change below 40°.

Provide ¼" clearance between jam nut and sole plate under all temperature conditions prior to jamming.

Sole plates, stainless steel plates, T.F.E. and elastomeric pads shall be included in the bid price for item No. 512, Bearing Device (Type II).

Seal weld stainless steel to the sole plate.

T.F.E. and substrate to be vulcanized to the elastomeric pad.

Location	No. Req'd.	Dimensions (inches) a	b	c	d	e	f	g	h	j	10° Temp. Increment
Abut. #1	16	34	11	24	9	14½	5	1⅜	1⅜	1⅜	0.055"
Abut. #3	16	34	11	24	9	14½	5	1⅜	1⅜	1⅜	0.055"

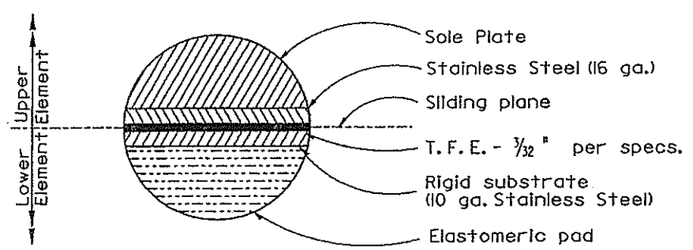

DETAIL "A"

INITIAL	DATE	Checked By	
Designed By JHP	7-89	JHP	9-89
Checked By AEG	8-89	AEG	9-89
Detailed By GMC	7-89	Quantities By JHP	9-89
		Checked By GNT	9-89

E-470
Engineer 470 Partnership

DIVISION OF HIGHWAYS
I-25 OVER SH 470/E-470
BEARING DEVICE (TYPE II)

Designer J. Peck	Structure Numbers	F-17-JU	
Detailer G.Christnacht		F-17-JV	
Drawing Number B-27	of 31	Drawings	

BEARING DEVICE (TYPE II

SY24:: OSA3:1174,1741SIBRG0221.90T

AS CONSTRUCTED					
NO REVISIONS		REVISED		VOID	

FEDERAL ROAD REGION NO.	DIVISION	PROJECT NUMBER	SHEET NUMBER
VIII	COLORADO	1A02	47

REVISIONS			
A-1	10- 5-89	NOTES & DIMENSIONS	AEG
	- -		
	- -		

	INITIAL	DATE			
Designed By	AEG	8-89	Checked By	AEG	9-89
Checked By	JHP	8-89	Quantities By	JHP	9-89
Detailed By	AEG	8-89	Checked By	GNT	9-89

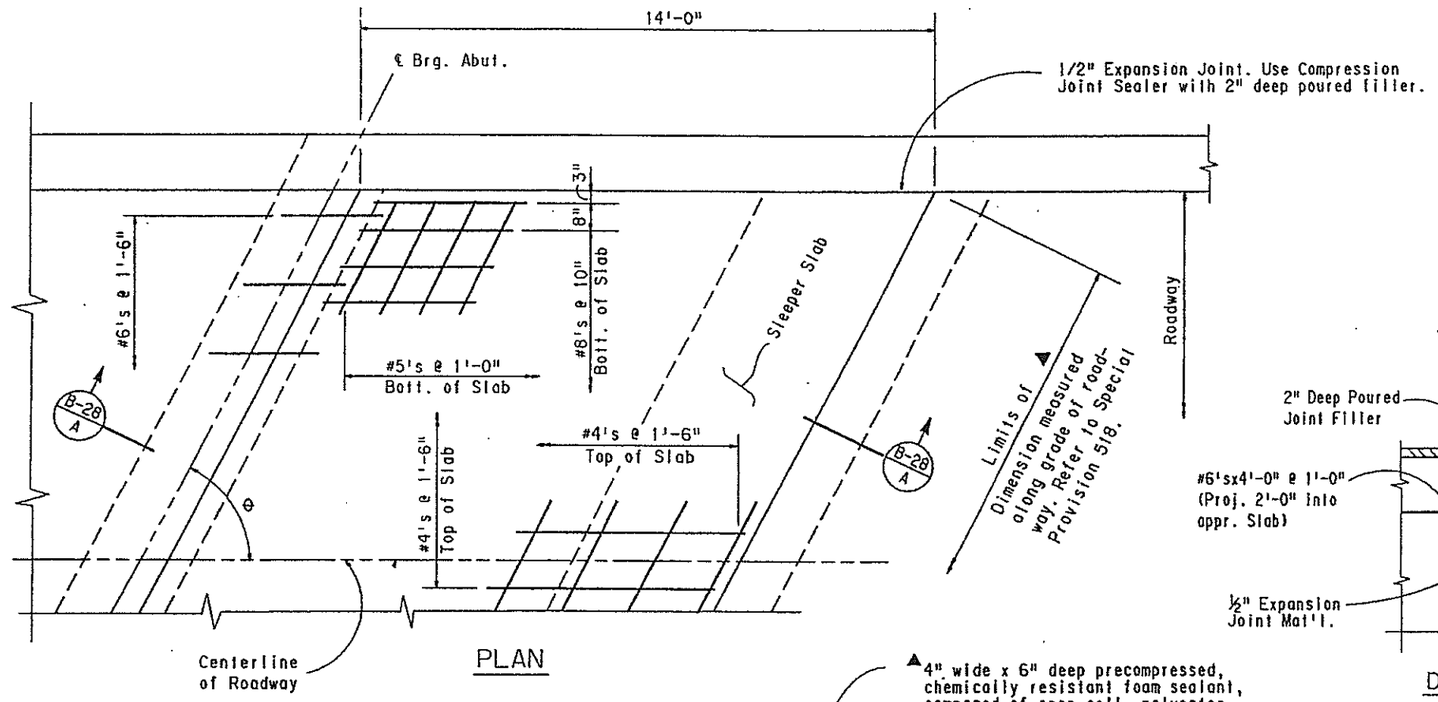

PLAN

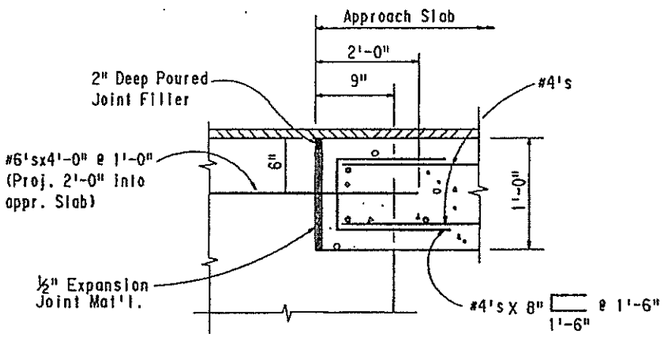

DETAIL B

GENERAL NOTES:

Concrete for approach slab shall be class D (Bridge

½" Expansion Joint Material shall meet AASHTO Spec. M-213.

The 20 gage galvanized sheet metal will not be measured and paid for separately, but shall be included in the work.

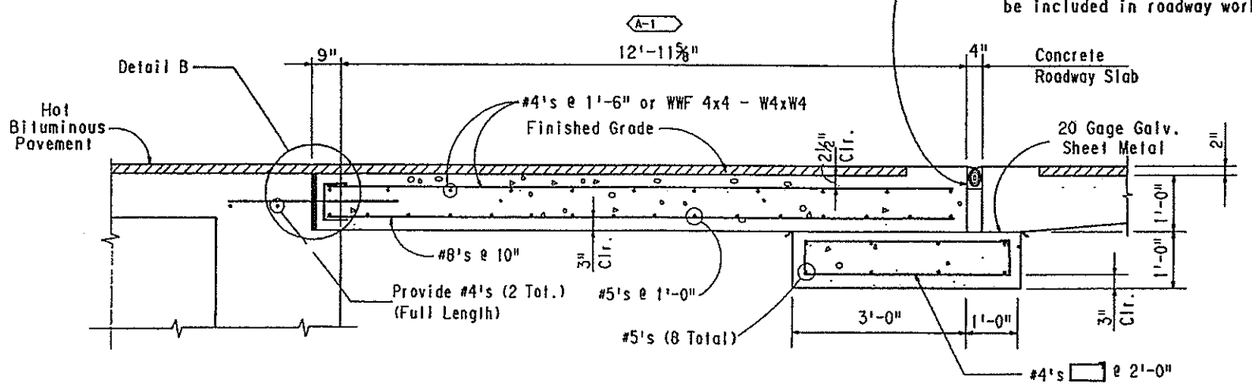

▲4" wide x 6" deep precompressed, chemically resistant foam sealant, composed of open cell, polyester polyurethane foam impregnated with neoprene rubber suspended in chlorinated hydrocarbons. 250 (To be included in roadway work.)

SECTION B-28 A

Taken perpendicular to ℄ Bearing

E-470

Engineer 470 Partnership

DIVISION OF HIGHWAYS

I-25 OVER SH 470/E-470

APPROACH SLAB DETAILS

Designer A. Griffith		Structure Numbers	F-17-JU
Detailer A. Griffith			F-17-JV
Drawing Number	B-28	of	31 Drawings

SI24::: QSAS 11.01_1\SIAPSO111.9DW

AS CONSTRUCTED		
NO REVISIONS	REVISED	VOID

FEDERAL ROAD REGION NO.	DIVISION	PROJECT NUMBER	SHEET NUMBER
VIII	COLORADO	1A02	48

EAST EDGE SB I-25

BENT LINE DESCRIPTION OR FRACTIONAL POINT DESIGNATION	STATION	OFFSET	ELEVATION
END SLAB	583+17.0688	3.4793	5884.2345
BEGIN SLAB	583+31.0682	3.4823	5884.2777
CL BRG A1	583+32.8535	3.4827	5884.2841
F-1	583+40.5034	3.4844	5884.3138
F-2	583+48.1534	3.4860	5884.3472
F-3	583+55.8033	3.4877	5884.3844
F-4	583+63.4532	3.4894	5884.4253
F-5	583+71.1031	3.4910	5884.4699
F-6	583+78.7530	3.4927	5884.5182
F-7	583+86.4030	3.4943	5884.5702
F-8	583+94.0529	3.4960	5884.6260
F-9	584+01.7028	3.4976	5884.6855
BK BRG P2	584+09.3527	3.4993	5884.7487
CL PIER 2	584+10.3729	3.4995	5884.7574
AH BRG P2	584+11.3931	3.4998	5884.7662
F-1	584+19.0430	3.5014	5884.8341
F-2	584+26.6929	3.5031	5884.9057
F-3	584+34.3428	3.5047	5884.9811
F-4	584+41.9928	3.5064	5885.0602
F-5	584+49.6427	3.5080	5885.1430
F-6	584+57.2926	3.5097	5885.2295
F-7	584+64.9425	3.5114	5885.3197
F-8	584+72.5925	3.5130	5885.4137
F-9	584+80.2424	3.5147	5885.5114
CL BRG A3	584+87.8923	3.5163	5885.6128
BEGIN SLAB	584+89.6776	3.5167	5885.6370
END SLAB	585+03.6770	3.5198	5885.8338

℄ GIRDER 9 & 25

BENT LINE DESCRIPTION OR FRACTIONAL POINT DESIGNATION	STATION	OFFSET	ELEVATION
END SLAB	583+16.4584	6.5000	5884.1725
BEGIN SLAB	583+30.4584	6.5000	5884.2152
CL BRG A1	583+32.2438	6.5000	5884.2215
F-1	583+39.8941	6.5000	5884.2510
F-2	583+47.5444	6.5000	5884.2842
F-3	583+55.1946	6.5000	5884.3211
F-4	583+62.8449	6.5000	5884.3617
F-5	583+70.4951	6.5000	5884.4060
F-6	583+78.1454	6.5000	5884.4541
F-7	583+85.7957	6.5000	5884.5059
F-8	583+93.4459	6.5000	5884.5613
F-9	584+01.0962	6.5000	5884.6206
BK BRG P2	584+08.7464	6.5000	5884.6835
CL PIER 2	584+09.7666	6.5000	5884.6922
AH BRG P2	584+10.7869	6.5000	5884.7009
F-1	584+18.4371	6.5000	5884.7686
F-2	584+26.0874	6.5000	5884.8400
F-3	584+33.7376	6.5000	5884.9151
F-4	584+41.3879	6.5000	5884.9939
F-5	584+49.0382	6.5000	5885.0764
F-6	584+56.6884	6.5000	5885.1627
F-7	584+64.3387	6.5000	5885.2527
F-8	584+71.9889	6.5000	5885.3464
F-9	584+79.6392	6.5000	5885.4438
CL BRG A3	584+87.2894	6.5000	5885.5450
BEGIN SLAB	584+89.0748	6.5000	5885.5691
END SLAB	585+03.0748	6.5000	5885.7655

℄ GIRDER 10 & 26

BENT LINE DESCRIPTION OR FRACTIONAL POINT DESIGNATION	STATION	OFFSET	ELEVATION
END SLAB	583+14.3369	17.0000	5883.9572
BEGIN SLAB	583+28.3369	17.0000	5883.9979
CL BRG A1	583+30.1223	17.0000	5884.0040
F-1	583+37.7725	17.0000	5884.0325
F-2	583+45.4228	17.0000	5884.0646
F-3	583+53.0731	17.0000	5884.1005
F-4	583+60.7233	17.0000	5884.1400
F-5	583+68.3736	17.0000	5884.1833
F-6	583+76.0238	17.0000	5884.2304
F-7	583+83.6741	17.0000	5884.2811
F-8	583+91.3244	17.0000	5884.3356
F-9	583+98.9746	17.0000	5884.3938
BK BRG P2	584+06.6249	17.0000	5884.4557
CL PIER 2	584+07.6451	17.0000	5884.4642
AH BRG P2	584+08.6653	17.0000	5884.4728
F-1	584+16.3155	17.0000	5884.5395
F-2	584+23.9658	17.0000	5884.6098
F-3	584+31.6161	17.0000	5884.6839
F-4	584+39.2663	17.0000	5884.7617
F-5	584+46.9166	17.0000	5884.8432
F-6	584+54.5668	17.0000	5884.9284
F-7	584+62.2171	17.0000	5885.0174
F-8	584+69.8674	17.0000	5885.1101
F-9	584+77.5176	17.0000	5885.2065
CL BRG A3	584+85.1679	17.0000	5885.3066
BEGIN SLAB	584+86.9533	17.0000	5885.3305
END SLAB	585+00.9533	17.0000	5885.5249

℄ GIRDER 11 & 27

BENT LINE DESCRIPTION OR FRACTIONAL POINT DESIGNATION	STATION	OFFSET	ELEVATION
END SLAB	583+12.2153	27.5000	5883.7421
BEGIN SLAB	583+26.2153	27.5000	5883.7810
CL BRG A1	583+28.0007	27.5000	5883.7868
F-1	583+35.6510	27.5000	5883.8142
F-2	583+43.3012	27.5000	5883.8453
F-3	583+50.9515	27.5000	5883.8801
F-4	583+58.6017	27.5000	5883.9187
F-5	583+66.2520	27.5000	5883.9610
F-6	583+73.9023	27.5000	5884.0070
F-7	583+81.5525	27.5000	5884.0567
F-8	583+89.2028	27.5000	5884.1101
F-9	583+96.8530	27.5000	5884.1673
BK BRG P2	584+04.5033	27.5000	5884.2281
CL PIER 2	584+05.5235	27.5000	5884.2365
AH BRG P2	584+06.5437	27.5000	5884.2450
F-1	584+14.1940	27.5000	5884.3106
F-2	584+21.8442	27.5000	5884.3799
F-3	584+29.4945	27.5000	5884.4530
F-4	584+37.1448	27.5000	5884.5297
F-5	584+44.7950	27.5000	5884.6102
F-6	584+52.4453	27.5000	5884.6944
F-7	584+60.0955	27.5000	5884.7823
F-8	584+67.7458	27.5000	5884.8740
F-9	584+75.3961	27.5000	5884.9693
CL BRG A3	584+83.0463	27.5000	5885.0684
BEGIN SLAB	584+84.8317	27.5000	5885.0921
END SLAB	584+98.8317	27.5000	5885.2847

℄ GIRDER 12 & 28

BENT LINE DESCRIPTION OR FRACTIONAL POINT DESIGNATION	STATION	OFFSET	ELEVATION
END SLAB	583+10.0937	38.0000	5883.5273
BEGIN SLAB	583+24.0937	38.0000	5883.5643
CL BRG A1	583+25.8791	38.0000	5883.5699
F-1	583+33.5294	38.0000	5883.5962
F-2	583+41.1797	38.0000	5883.6263
F-3	583+48.8299	38.0000	5883.6601
F-4	583+56.4802	38.0000	5883.6976
F-5	583+64.1304	38.0000	5883.7389
F-6	583+71.7807	38.0000	5883.7838
F-7	583+79.4310	38.0000	5883.8325
F-8	583+87.0812	38.0000	5883.8843
F-9	583+94.7315	38.0000	5883.9410
BK BRG P2	584+02.3817	38.0000	5884.0009
CL PIER 2	584+03.4019	38.0000	5884.0092
AH BRG P2	584+04.4222	38.0000	5884.0175
F-1	584+12.0724	38.0000	5884.0820
F-2	584+19.7227	38.0000	5884.1503
F-3	584+27.3729	38.0000	5884.2223
F-4	584+35.0232	38.0000	5884.2981
F-5	584+42.6734	38.0000	5884.3775
F-6	584+50.3237	38.0000	5884.4607
F-7	584+57.9740	38.0000	5884.5476
F-8	584+65.6242	38.0000	5884.6382
F-9	584+73.2745	38.0000	5884.7325
CL BRG A3	584+80.9247	38.0000	5884.8306
BEGIN SLAB	584+82.7101	38.0000	5884.8540
END SLAB	584+96.7101	38.0000	5885.0447

℄ GIRDER 13 & 29

BENT LINE DESCRIPTION OR FRACTIONAL POINT DESIGNATION	STATION	OFFSET	ELEVATION
END SLAB	583+07.9722	48.5000	5883.3127
BEGIN SLAB	583+21.9722	48.5000	5883.3479
CL BRG A1	583+23.7576	48.5000	5883.3532
F-1	583+31.4078	48.5000	5883.3785
F-2	583+39.0581	48.5000	5883.4076
F-3	583+46.7084	48.5000	5883.4404
F-4	583+54.3586	48.5000	5883.4768
F-5	583+62.0089	48.5000	5883.5171
F-6	583+69.6591	48.5000	5883.5610
F-7	583+77.3094	48.5000	5883.6086
F-8	583+84.9596	48.5000	5883.6600
F-9	583+92.6099	48.5000	5883.7151
BK BRG P2	584+00.2602	48.5000	5883.7739
CL PIER 2	584+01.2804	48.5000	5883.7820
AH BRG P2	584+02.3006	48.5000	5883.7902
F-1	584+09.9508	48.5000	5883.8538
F-2	584+17.6011	48.5000	5883.9210
F-3	584+25.2514	48.5000	5883.9920
F-4	584+32.9016	48.5000	5884.0667
F-5	584+40.5519	48.5000	5884.1451
F-6	584+48.2021	48.5000	5884.2272
F-7	584+55.8524	48.5000	5884.3131
F-8	584+63.5027	48.5000	5884.4027
F-9	584+71.1529	48.5000	5884.4960
CL BRG A3	584+78.8032	48.5000	5884.5930
BEGIN SLAB	584+80.5886	48.5000	5884.6162
END SLAB	584+94.5886	48.5000	5884.8050

℄ GIRDER 14 & 30

BENT LINE DESCRIPTION OR FRACTIONAL POINT DESIGNATION	STATION	OFFSET	ELEVATION
END SLAB	583+05.8506	59.0000	5883.0985
BEGIN SLAB	583+19.8506	59.0000	5883.1317
CL BRG A1	583+21.6360	59.0000	5883.1369
F-1	583+29.2863	59.0000	5883.1612
F-2	583+36.9365	59.0000	5883.1892
F-3	583+44.5868	59.0000	5883.2209
F-4	583+52.2370	59.0000	5883.2564
F-5	583+59.8873	59.0000	5883.2955
F-6	583+67.5376	59.0000	5883.3384
F-7	583+75.1878	59.0000	5883.3851
F-8	583+82.8381	59.0000	5883.4354
F-9	583+90.4883	59.0000	5883.4895
BK BRG P2	583+98.1386	59.0000	5883.5472
CL PIER 2	583+99.1588	59.0000	5883.5552
AH BRG P2	584+00.1790	59.0000	5883.5633
F-1	584+07.8293	59.0000	5883.6258
F-2	584+15.4795	59.0000	5883.6920
F-3	584+23.1298	59.0000	5883.7619
F-4	584+30.7800	59.0000	5883.8356
F-5	584+38.4303	59.0000	5883.9130
F-6	584+46.0806	59.0000	5883.9941
F-7	584+53.7308	59.0000	5884.0789
F-8	584+61.3811	59.0000	5884.1675
F-9	584+69.0313	59.0000	5884.2597
CL BRG A3	584+76.6816	59.0000	5884.3557
BEGIN SLAB	584+78.4670	59.0000	5884.3787
END SLAB	584+92.4670	59.0000	5884.5656

℄ GIRDER 15 & 31

BENT LINE DESCRIPTION OR FRACTIONAL POINT DESIGNATION	STATION	OFFSET	ELEVATION
END SLAB	583+03.7290	69.5000	5882.8846
BEGIN SLAB	583+17.7290	69.5000	5882.9159
CL BRG A1	583+19.5144	69.5000	5882.9208
F-1	583+27.1647	69.5000	5882.9440
F-2	583+34.8150	69.5000	5882.9710
F-3	583+42.4652	69.5000	5883.0017
F-4	583+50.1155	69.5000	5883.0361
F-5	583+57.7657	69.5000	5883.0743
F-6	583+65.4160	69.5000	5883.1162
F-7	583+73.0662	69.5000	5883.1617
F-8	583+80.7165	69.5000	5883.2111
F-9	583+88.3668	69.5000	5883.2641
BK BRG P2	583+96.0170	69.5000	5883.3208
CL PIER 2	583+97.0372	69.5000	5883.3287
AH BRG P2	583+98.0574	69.5000	5883.3366
F-1	584+05.7077	69.5000	5883.3981
F-2	584+13.3580	69.5000	5883.4633
F-3	584+21.0082	69.5000	5883.5322
F-4	584+28.6585	69.5000	5883.6048
F-5	584+36.3087	69.5000	5883.6812
F-6	584+43.9590	69.5000	5883.7603
F-7	584+51.6093	69.5000	5883.8450
F-8	584+59.2595	69.5000	5883.9325
F-9	584+66.9098	69.5000	5884.0238
CL BRG A3	584+74.5600	69.5000	5884.1187
BEGIN SLAB	584+76.3454	69.5000	5884.1414
END SLAB	584+90.3454	69.5000	5884.3264

℄ GIRDER 16 & 32

BENT LINE DESCRIPTION OR FRACTIONAL POINT DESIGNATION	STATION	OFFSET	ELEVATION
END SLAB	583+01.4615	80.7225	5882.6562
BEGIN SLAB	583+15.5183	80.4414	5882.6913
CL BRG A1	583+17.3109	80.4055	5882.6967
F-1	583+24.9922	80.2519	5882.7220
F-2	583+32.6735	80.0983	5882.7511
F-3	583+40.3548	79.9446	5882.7840
F-4	583+48.0361	79.7910	5882.8206
F-5	583+55.7174	79.6374	5882.8610
F-6	583+63.3987	79.4838	5882.9051
F-7	583+71.0800	79.3302	5882.9530
F-8	583+78.7613	79.1765	5883.0046
F-9	583+86.4426	79.0229	5883.0599
BK BRG P2	583+94.1239	78.8693	5883.1191
CL PIER 2	583+95.1483	78.8488	5883.1272
AH BRG P2	583+96.1726	78.8283	5883.1355
F-1	584+03.8539	78.6747	5883.1993
F-2	584+11.5352	78.5211	5883.2670
F-3	584+19.2165	78.3674	5883.3383
F-4	584+26.8978	78.2138	5883.4135
F-5	584+34.5791	78.0602	5883.4924
F-6	584+42.2604	77.9066	5883.5750
F-7	584+49.9417	77.7530	5883.6614
F-8	584+57.6230	77.5993	5883.7515
F-9	584+65.3043	77.4457	5883.8454
CL BRG A3	584+72.9856	77.2921	5883.9431
BEGIN SLAB	584+74.7783	77.2562	5883.9664
END SLAB	584+88.8351	76.9751	5884.1564

WEST EDGE SB I-25

BENT LINE DESCRIPTION OR FRACTIONAL POINT DESIGNATION	STATION	OFFSET	ELEVATION
END SLAB	583+00.8528	83.7351	5882.5950
BEGIN SLAB	583+14.9096	83.4540	5882.6295
CL BRG A1	583+16.7022	83.4181	5882.6348
F-1	583+24.3835	83.2645	5882.6599
F-2	583+32.0648	83.1109	5882.6887
F-3	583+39.7461	82.9572	5882.7212
F-4	583+47.4274	82.8036	5882.7576
F-5	583+55.1087	82.6500	5882.7973
F-6	583+62.7900	82.4964	5882.8414
F-7	583+70.4713	82.3428	5882.8890
F-8	583+78.1526	82.1891	5882.9403
F-9	583+85.8339	82.0355	5882.9954
BK BRG P2	583+93.5152	81.8819	5883.0542
CL PIER 2	583+94.5396	81.8614	5883.0624
AH BRG P2	583+95.5639	81.8409	5883.0706
F-1	584+03.2452	81.6873	5883.1341
F-2	584+10.9265	81.5337	5883.2015
F-3	584+18.6078	81.3800	5883.2725
F-4	584+26.2891	81.2264	5883.3474
F-5	584+33.9704	81.0728	5883.4260
F-6	584+41.6517	80.9192	5883.5083
F-7	584+49.3330	80.7656	5883.5944
F-8	584+57.0143	80.6119	5883.6842
F-9	584+64.6956	80.4583	5883.7778
CL BRG A3	584+72.3769	80.3047	5883.8752
BEGIN SLAB	584+74.1695	80.2688	5883.8984
END SLAB	584+88.2263	79.9877	5884.0879

WEST EDGE NB I-25

BENT LINE DESCRIPTION OR FRACTIONAL POINT DESIGNATION	STATION	OFFSET	ELEVATION
END SLAB	583+18.5168	-3.6872	5884.2343
BEGIN SLAB	583+32.5162	-3.6841	5884.2788
CL ABUT 1	583+34.3015	-3.6838	5884.2854
F-1	583+41.9514	-3.6821	5884.3159
F-2	583+49.6014	-3.6804	5884.3501
F-3	583+57.2513	-3.6788	5884.3880
F-4	583+64.9012	-3.6771	5884.4297
F-5	583+72.5511	-3.6755	5884.4751
F-6	583+80.2011	-3.6738	5884.5241
F-7	583+87.8510	-3.6721	5884.5770
F-8	583+95.5009	-3.6705	5884.6335
F-9	584+03.1508	-3.6688	5884.6937
BK BRG P2	584+10.8008	-3.6672	5884.7577
CL PIER 2	584+11.8209	-3.6669	5884.7665
AH BRG P2	584+12.8411	-3.6667	5884.7754
F-1	584+20.4910	-3.6651	5884.8441
F-2	584+28.1409	-3.6634	5884.9165
F-3	584+35.7909	-3.6617	5884.9926
F-4	584+43.4408	-3.6601	5885.0725
F-5	584+51.0907	-3.6584	5885.1561
F-6	584+58.7406	-3.6568	5885.2434
F-7	584+66.3906	-3.6551	5885.3344
F-8	584+74.0405	-3.6535	5885.4291
F-9	584+81.6904	-3.6518	5885.5276
CL BRG A3	584+89.3403	-3.6501	5885.6297
BEGIN SLAB	584+91.1256	-3.6497	5885.6541
END SLAB	585+05.1250	-3.6467	5885.8523

℄ GIRDER 8 & 24

BENT LINE DESCRIPTION OR FRACTIONAL POINT DESIGNATION	STATION	OFFSET	ELEVATION
END SLAB	583+19.0852	-6.5000	5884.1796
BEGIN SLAB	583+33.0852	-6.5000	5884.2246
CL ABUT 1	583+34.8706	-6.5000	5884.2312
F-1	583+42.5208	-6.5000	5884.2620
F-2	583+50.1711	-6.5000	5884.2964
F-3	583+57.8213	-6.5000	5884.3346
F-4	583+65.4716	-6.5000	5884.3765
F-5	583+73.1219	-6.5000	5884.4221
F-6	583+80.7721	-6.5000	5884.4714
F-7	583+88.4224	-6.5000	5884.5245
F-8	583+96.0726	-6.5000	5884.5813
F-9	584+03.7229	-6.5000	5884.6418
BK BRG P2	584+11.3732	-6.5000	5884.7060
CL PIER 2	584+12.3934	-6.5000	5884.7148
AH BRG P2	584+13.4136	-6.5000	5884.7237
F-1	584+21.0638	-6.5000	5884.7927
F-2	584+28.7141	-6.5000	5884.8653
F-3	584+36.3643	-6.5000	5884.9417
F-4	584+44.0146	-6.5000	5885.0218
F-5	584+51.6649	-6.5000	5885.1056
F-6	584+59.3151	-6.5000	5885.1932
F-7	584+66.9654	-6.5000	5885.2845
F-8	584+74.6156	-6.5000	5885.3794
F-9	584+82.2659	-6.5000	5885.4782
CL BRG A3	584+89.9162	-6.5000	5885.5806
BEGIN SLAB	584+91.7016	-6.5000	5885.6050
END SLAB	585+05.7016	-6.5000	5885.8037

℄ GIRDER 7 & 23

BENT LINE DESCRIPTION OR FRACTIONAL POINT DESIGNATION	STATION	OFFSET	ELEVATION
END SLAB	583+21.2067	-17.0000	5883.9756
BEGIN SLAB	583+35.2067	-17.0000	5884.0225
CL ABUT 1	583+36.9921	-17.0000	5884.0294
F-1	583+44.6424	-17.0000	5884.0611
F-2	583+52.2926	-17.0000	5884.0966
F-3	583+59.9429	-17.0000	5884.1358
F-4	583+67.5932	-17.0000	5884.1788
F-5	583+75.2434	-17.0000	5884.2254
F-6	583+82.8937	-17.0000	5884.2758
F-7	583+90.5439	-17.0000	5884.3299
F-8	583+98.1942	-17.0000	5884.3877
F-9	584+05.8445	-17.0000	5884.4492
BK BRG P2	584+13.4947	-17.0000	5884.5145
CL PIER 2	584+14.5149	-17.0000	5884.5234
AH BRG P2	584+15.5351	-17.0000	5884.5325
F-1	584+23.1854	-17.0000	5884.6025
F-2	584+30.8356	-17.0000	5884.6762
F-3	584+38.4859	-17.0000	5884.7533
F-4	584+46.1362	-17.0000	5884.8347
F-5	584+53.7864	-17.0000	5884.9196
F-6	584+61.4367	-17.0000	5885.0081
F-7	584+69.0869	-17.0000	5885.1004
F-8	584+76.7372	-17.0000	5885.1964
F-9	584+84.3875	-17.0000	5885.2962
CL BRG A3	584+92.0377	-17.0000	5885.3996
BEGIN SLAB	584+93.8231	-17.0000	5885.4243
END SLAB	585+07.8231	-17.0000	5885.6249

℄ GIRDER 6 & 22

BENT LINE DESCRIPTION OR FRACTIONAL POINT DESIGNATION	STATION	OFFSET	ELEVATION
END SLAB	583+23.3283	-27.5000	5883.7719
BEGIN SLAB	583+37.3283	-27.5000	5883.8207
CL ABUT 1	583+39.1137	-27.5000	5883.8278
F-1	583+46.7639	-27.5000	5883.8606
F-2	583+54.4142	-27.5000	5883.8971
F-3	583+62.0645	-27.5000	5883.9374
F-4	583+69.7147	-27.5000	5883.9813
F-5	583+77.3650	-27.5000	5884.0290
F-6	583+85.0152	-27.5000	5884.0804
F-7	583+92.6655	-27.5000	5884.1355
F-8	584+00.3158	-27.5000	5884.1944
F-9	584+07.9660	-27.5000	5884.2569
BK BRG P2	584+15.6163	-27.5000	5884.3232
CL PIER 2	584+16.6365	-27.5000	5884.3323
AH BRG P2	584+17.6567	-27.5000	5884.3415
F-1	584+25.3069	-27.5000	5884.4125
F-2	584+32.9572	-27.5000	5884.4872
F-3	584+40.6075	-27.5000	5884.5657
F-4	584+48.2577	-27.5000	5884.6479
F-5	584+55.9080	-27.5000	5884.7337
F-6	584+63.5582	-27.5000	5884.8234
F-7	584+71.2085	-27.5000	5884.9167
F-8	584+78.8588	-27.5000	5885.0137
F-9	584+86.5090	-27.5000	5885.1145
CL BRG A3	584+94.1593	-27.5000	5885.2190
BEGIN SLAB	584+95.9447	-27.5000	5885.2439
END SLAB	585+09.9447	-27.5000	5885.4464

℄ GIRDER 5 & 21

BENT LINE DESCRIPTION OR FRACTIONAL POINT DESIGNATION	STATION	OFFSET	ELEVATION
END SLAB	583+25.4499	-38.0000	5883.5685
BEGIN SLAB	583+39.4499	-38.0000	5883.6192
CL ABUT 1	583+41.2353	-38.0000	5883.6265
F-1	583+48.8855	-38.0000	5883.6604
F-2	583+56.5358	-38.0000	5883.6979
F-3	583+64.1860	-38.0000	5883.7392
F-4	583+71.8363	-38.0000	5883.7842
F-5	583+79.4866	-38.0000	5883.8329
F-6	583+87.1368	-38.0000	5883.8853
F-7	583+94.7871	-38.0000	5883.9415
F-8	584+02.4373	-38.0000	5884.0013
F-9	584+10.0876	-38.0000	5884.0649
BK BRG P2	584+17.7379	-38.0000	5884.1323
CL PIER 2	584+18.7581	-38.0000	5884.1415
AH BRG P2	584+19.7783	-38.0000	5884.1508
F-1	584+27.4285	-38.0000	5884.2229
F-2	584+35.0788	-38.0000	5884.2986
F-3	584+42.7290	-38.0000	5884.3781
F-4	584+50.3793	-38.0000	5884.4613
F-5	584+58.0296	-38.0000	5884.5482
F-6	584+65.6798	-38.0000	5884.6389
F-7	584+73.3301	-38.0000	5884.7332
F-8	584+80.9803	-38.0000	5884.8313
F-9	584+88.6306	-38.0000	5884.9331
CL BRG A3	584+96.2809	-38.0000	5885.0386
BEGIN SLAB	584+98.0663	-38.0000	5885.0638
END SLAB	585+12.0663	-38.0000	5885.2681

NOTE: ELEVATIONS ARE AT TOP OF CONCRETE DECK 0.1667 FEET BELOW FINISHED GRADE.

	INITIAL	DATE	Checked By	JHP	9-89
Designed By	JHP	8-89		GNT	9-89
Checked By	AEG	8-89	Quantities By	JHP	9-89
Detailed By	GMC	8-89	Checked By	GNT	9-89

E-470
Engineer 470 Partnership

DIVISION OF HIGHWAYS

I-25 OVER SH 470/E-470 BRIDGE DECK ELEVATIONS

Designer J. Peck	Structure Numbers	F-17-JU
Detailer G.Christnacht		F-17-JV
Drawing Number B-29 of 31 Drawings		

BRIDGE DECK ELEVATION

SIBDE0121.90

SY24:: 0543:[174,174]SIBDE0121.90X

℄ GIRDER 4 & 20

BENT LINE DESCRIPTION OR FRACTIONAL POINT DESIGNATION	STATION	OFFSET	ELEVATION
END SLAB	583+27.5714	-48.5000	5883.3654
BEGIN SLAB	583+41.5714	-48.5000	5883.4179
CL ABUT 1	583+43.3568	-46.5000	5883.4255
F-1	583+51.0071	-48.5000	5883.4604
F-2	583+58.6573	-48.5000	5883.4990
F-3	583+66.3076	-48.5000	5883.5413
F-4	583+73.9579	-48.5000	5883.5873
F-5	583+81.6081	-48.5000	5883.6370
F-6	583+89.2584	-48.5000	5883.6905
F-7	583+96.9086	-48.5000	5883.7477
F-8	584+04.5589	-48.5000	5883.8086
F-9	584+12.2092	-48.5000	5883.8732
BK BRG P2	584+19.8594	-48.5000	5883.9416
CL PIER 2	584+20.8796	-48.5000	5883.9510
AH BRG P2	584+21.8998	-48.5000	5883.9604
F-1	584+29.5501	-48.5000	5884.0335
F-2	584+37.2003	-48.5000	5884.1103
F-3	584+44.8506	-48.5000	5884.1908
F-4	584+52.5009	-48.5000	5884.2750
F-5	584+60.1511	-48.5000	5884.3630
F-6	584+67.8014	-48.5000	5884.4547
F-7	584+75.4516	-48.5000	5884.5501
F-8	584+83.1019	-48.5000	5884.6492
F-9	584+90.7522	-48.5000	5884.7520
CL BRG A3	584+98.4024	-48.5000	5884.8586
BEGIN SLAB	585+00.1878	-48.5000	5884.8840
END SLAB	585+14.1878	-48.5000	5885.0902

℄ GIRDER 3 & 19

BENT LINE DESCRIPTION OR FRACTIONAL POINT DESIGNATION	STATION	OFFSET	ELEVATION
END SLAB	583+29.7684	-59.3730	5883.1553
BEGIN SLAB	583+43.7145	-59.1066	5883.2150
CL ABUT 1	583+45.4931	-59.0726	5883.2235
F-1	583+53.1139	-58.9270	5883.2621
F-2	583+60.7348	-58.7814	5883.3045
F-3	583+68.3556	-58.6358	5883.3505
F-4	583+75.9764	-58.4903	5883.4003
F-5	583+83.5973	-58.3447	5883.4537
F-6	583+91.2181	-58.1991	5883.5108
F-7	583+98.8390	-58.0535	5883.5716
F-8	584+06.4598	-57.9079	5883.6362
F-9	584+14.0807	-57.7623	5883.7044
BK BRG P2	584+21.7015	-57.6168	5883.7763
CL PIER 2	584+22.7178	-57.5974	5883.7861
AH BRG P2	584+23.7341	-57.5779	5883.7961
F-1	584+31.3549	-57.4324	5883.8726
F-2	584+38.9757	-57.2868	5883.9529
F-3	584+46.5966	-57.1412	5884.0369
F-4	584+54.2174	-56.9956	5884.1245
F-5	584+61.8383	-56.8500	5884.2159
F-6	584+69.4591	-56.7044	5884.3109
F-7	584+77.0800	-56.5589	5884.4097
F-8	584+84.7008	-56.4133	5884.5121
F-9	584+92.3217	-56.2677	5884.6182
CL BRG A3	584+99.9425	-56.1221	5884.7280
BEGIN SLAB	585+01.7210	-56.0881	5884.7542
END SLAB	585+15.6672	-55.8217	5884.9663

℄ GIRDER 2 & 18

BENT LINE DESCRIPTION OR FRACTIONAL POINT DESIGNATION	STATION	OFFSET	ELEVATION
END SLAB	583+31.9653	-70.2461	5882.9456
BEGIN SLAB	583+45.8577	-69.7133	5883.0123
CL ABUT 1	583+47.6293	-69.6453	5883.0216
F-1	583+55.2207	-69.3541	5883.0641
F-2	583+62.8122	-69.0629	5883.1102
F-3	583+70.4036	-68.7718	5883.1600
F-4	583+77.9950	-68.4806	5883.2135
F-5	583+85.5865	-68.1894	5883.2706
F-6	583+93.1779	-67.8982	5883.3314
F-7	584+00.7693	-67.6071	5883.3958
F-8	584+08.3607	-67.3159	5883.4639
F-9	584+15.9522	-67.0247	5883.5357
BK BRG P2	584+23.5436	-66.7335	5883.6112
CL PIER 2	584+24.5559	-66.6947	5883.6213
AH BRG P2	584+25.5683	-66.6559	5883.6319
F-1	584+33.1597	-66.3647	5883.7120
F-2	584+40.7511	-66.0735	5883.7957
F-3	584+48.3426	-65.7823	5883.8831
F-4	584+55.9340	-65.4912	5883.9742
F-5	584+63.5254	-65.2000	5884.0690
F-6	584+71.1169	-64.9088	5884.1674
F-7	584+78.7083	-64.6176	5884.2694
F-8	584+86.2997	-64.3265	5884.3752
F-9	584+93.8911	-64.0353	5884.4846
CL BRG A3	585+01.4826	-63.7441	5884.5976
BEGIN SLAB	585+03.2542	-63.6761	5884.6245
END SLAB	585+17.1466	-63.1433	5884.8425

℄ GIRDER 1 & 17

BENT LINE DESCRIPTION OR FRACTIONAL POINT DESIGNATION	STATION	OFFSET	ELEVATION
END SLAB	583+34.1623	-81.1191	5882.7362
BEGIN SLAB	583+48.0008	-80.3198	5882.8099
CL ABUT 1	583+49.7656	-80.2179	5882.8201
F-1	583+57.3276	-79.7811	5882.8664
F-2	583+64.8896	-79.3444	5882.9163
F-3	583+72.4516	-78.9076	5882.9698
F-4	583+80.0136	-78.4709	5883.0270
F-5	583+87.5756	-78.0341	5883.0878
F-6	583+95.1376	-77.5973	5883.1522
F-7	584+02.6996	-77.1606	5883.2202
F-8	584+10.2616	-76.7238	5883.2920
F-9	584+17.8237	-76.2871	5883.3673
BK BRG P2	584+25.3857	-75.8503	5883.4463
CL PIER 2	584+26.3941	-75.7920	5883.4571
AH BRG P2	584+27.4025	-75.7338	5883.4679
F-1	584+34.9645	-75.2970	5883.5515
F-2	584+42.5266	-74.8603	5883.6387
F-3	584+50.0886	-74.4235	5883.7296
F-4	584+57.6506	-73.9868	5883.8241
F-5	584+65.2126	-73.5500	5883.9222
F-6	584+72.7746	-73.1132	5884.0240
F-7	584+80.3366	-72.6765	5884.1294
F-8	584+87.8986	-72.2397	5884.2384
F-9	584+95.4606	-71.8030	5884.3511
CL BRG A3	585+03.0226	-71.3662	5884.4674
BEGIN SLAB	585+04.7874	-71.2643	5884.4951
END SLAB	585+18.6259	-70.4650	5884.7189

EAST EDGE NB I-25

BENT LINE DESCRIPTION OR FRACTIONAL POINT DESIGNATION	STATION	OFFSET	ELEVATION
END SLAB	583+34.7624	-84.0894	5882.5124
BEGIN SLAB	583+48.6009	-83.2901	5882.5866
CL ABUT 1	583+50.3657	-83.1882	5882.5969
F-1	583+57.9277	-82.7514	5882.6434
F-2	583+65.4897	-82.3147	5882.6936
F-3	583+73.0518	-81.8779	5882.7474
F-4	583+80.6138	-81.4411	5882.8049
F-5	583+88.1758	-81.0044	5882.8660
F-6	583+95.7378	-80.5676	5882.9307
F-7	584+03.2998	-80.1308	5882.9990
F-8	584+10.8618	-79.6941	5883.0710
F-9	584+18.4238	-79.2573	5883.1467
BK BRG P2	584+25.9858	-78.8205	5883.2259
CL PIER 2	584+26.9943	-78.7623	5883.2368
AH BRG P2	584+28.0027	-78.7041	5883.2477
F-1	584+35.5647	-78.2673	5883.3316
F-2	584+43.1267	-77.8305	5883.4191
F-3	584+50.6887	-77.3938	5883.5102
F-4	584+58.2507	-76.9570	5883.6050
F-5	584+65.8127	-76.5202	5883.7034
F-6	584+73.3747	-76.0835	5883.8054
F-7	584+80.9367	-75.6467	5883.9111
F-8	584+88.4988	-75.2099	5884.0205
F-9	584+96.0608	-74.7732	5884.1334
CL BRG A3	585+03.6228	-74.3364	5884.2500
BEGIN SLAB	585+05.3876	-74.2345	5884.2778
END SLAB	585+19.2261	-73.4352	5884.5021

SECTION

LOOKING AHEAD STATION

NOTE: ELEVATIONS ARE AT TOP OF CONCRETE DECK 0.1667 FEET BELOW FINISHED GRADE.

	INITIAL	DATE
Designed By	JHP	8-89
Checked By	AEG	8-89
Detailed By	GMC	8-89

Checked By	JHP	9-89
Quantities By	GNT	9-89
Checked By	JHP	9-89
	GNT	9-89

E-470
Engineer 470 Partnership

DIVISION OF HIGHWAYS

I-25 OVER SH 470/E-470
BRIDGE DECK ELEVATIONS

Designer J. Peck	Structure Numbers	F-17-JU
Detailer G.Christnacht		F-17-JV
Drawing Number B-30 of 31 Drawings		

BRIDGE DECK ELEVATION

AS CONSTRUCTED					
NO REVISIONS		REVISED		VOID	

FEDERAL ROAD REGION NO.	DIVISION	PROJECT NUMBER	SHEET NUMBER
VIII	COLORADO	1A02	50

REVISIONS			
- -			
- -			
- -			

ROADWAY APPROACHES

ELEVATIONS ARE AT FINISHED GRADE

NORTH OUT SHOULDER

	STATION	OFFSET	ELEVATION
END N APR	582+50.0000	-76.2086	5882.9125
	582+60.0000	-75.6377	5882.9109
	582+70.0000	-75.0668	5882.9156
	582+80.0000	-74.4959	5882.9267
	582+90.0000	-73.9249	5882.9441
	583+00.0000	-73.3540	5882.9679
	583+10.0000	-72.7831	5882.9981
	583+20.0000	-72.2122	5883.0346
	583+30.0000	-71.6413	5883.0775
	583+40.0000	-71.0704	5883.1267
	583+50.0000	-70.4994	5883.1823
BEG N APR	583+60.0000	-69.9285	5883.2443
BEG S APR	584+70.0000	-63.6485	5884.3454
	584+80.0000	-63.0775	5884.4837
	584+90.0000	-62.5066	5884.6283
	585+00.0000	-61.9357	5884.7793
	585+10.0000	-61.3648	5884.9366
	585+20.0000	-60.7939	5885.1003
END S APR	585+30.0000	-60.2230	5885.2703

NB MEDIAN SHOULDER

	STATION	OFFSET	ELEVATION
END N APR	582+50.0000	-7.7500	5884.2817
	582+60.0000	-7.7500	5884.2686
	582+70.0000	-7.7500	5884.2619
	582+80.0000	-7.7500	5884.2616
	582+90.0000	-7.7500	5884.2676
	583+00.0000	-7.7500	5884.2800
	583+10.0000	-7.7500	5884.2988
	583+20.0000	-7.7500	5884.3239
	583+30.0000	-7.7500	5884.3553
	583+40.0000	-7.7500	5884.3931
	583+50.0000	-7.7500	5884.4373
BEG N APR	583+60.0000	-7.7500	5884.4878
BEG S APR	584+70.0000	-7.7500	5885.4634
	584+80.0000	-7.7500	5885.5902
	584+90.0000	-7.7500	5885.7234
	585+00.0000	-7.7500	5885.8630
	585+10.0000	-7.7500	5886.0089
	585+20.0000	-7.7500	5886.1612
END S APR	585+30.0000	-7.7500	5886.3198

HORIZONTAL CONTROL

	STATION	OFFSET	ELEVATION
END N APR	582+50.0000	0.0000	5884.4367
	582+60.0000	0.0000	5884.4236
	582+70.0000	0.0000	5884.4169
	582+80.0000	0.0000	5884.4166
	582+90.0000	0.0000	5884.4226
	583+00.0000	0.0000	5884.4350
	583+10.0000	0.0000	5884.4538
	583+20.0000	0.0000	5884.4789
	583+30.0000	0.0000	5884.5103
	583+40.0000	0.0000	5884.5481
	583+50.0000	0.0000	5884.5923
BEG N APR	583+60.0000	0.0000	5884.6428
BEG S APR	584+70.0000	0.0000	5885.6184
	584+80.0000	0.0000	5885.7452
	584+90.0000	0.0000	5885.8784
	585+00.0000	0.0000	5886.0180
	585+10.0000	0.0000	5886.1639
	585+20.0000	0.0000	5886.3162
END S APR	585+30.0000	0.0000	5886.4748

SB MEDIAN SHOULDER

	STATION	OFFSET	ELEVATION
END N APR	582+50.0000	7.7500	5884.2817
	582+60.0000	7.7500	5884.2686
	582+70.0000	7.7500	5884.2619
	582+80.0000	7.7500	5884.2616
	582+90.0000	7.7500	5884.2676
	583+00.0000	7.7500	5884.2800
	583+10.0000	7.7500	5884.2988
	583+20.0000	7.7500	5884.3239
	583+30.0000	7.7500	5884.3553
	583+40.0000	7.7500	5884.3931
	583+50.0000	7.7500	5884.4373
BEG N APR	583+60.0000	7.7500	5884.4878
BEG S APR	584+70.0000	7.7500	5885.4634
	584+80.0000	7.7500	5885.5902
	584+90.0000	7.7500	5885.7234
	585+00.0000	7.7500	5885.8630
	585+10.0000	7.7500	5886.0089
	585+20.0000	7.7500	5886.1612
END S APR	585+30.0000	7.7500	5886.3198

SOUTH OUT SHOULDER

	STATION	OFFSET	ELEVATION
END N APR	582+50.0000	73.3460	5882.9698
	582+60.0000	73.1452	5882.9607
	582+70.0000	72.9444	5882.9581
	582+80.0000	72.7436	5882.9617
	582+90.0000	72.5428	5882.9718
	583+00.0000	72.3419	5882.9882
	583+10.0000	72.1411	5883.0109
	583+20.0000	71.9403	5883.0400
	583+30.0000	71.7395	5883.0755
	583+40.0000	71.5387	5883.1174
	583+50.0000	71.3379	5883.1655
BEG N APR	583+60.0000	71.1371	5883.2201
BEG S APR	584+70.0000	68.9283	5884.2398
	584+80.0000	68.7274	5884.3707
	584+90.0000	68.5266	5884.5079
	585+00.0000	68.3258	5884.6515
	585+10.0000	68.1250	5884.8014
	585+20.0000	67.9242	5884.9577
END S APR	585+30.0000	67.7234	5885.1203

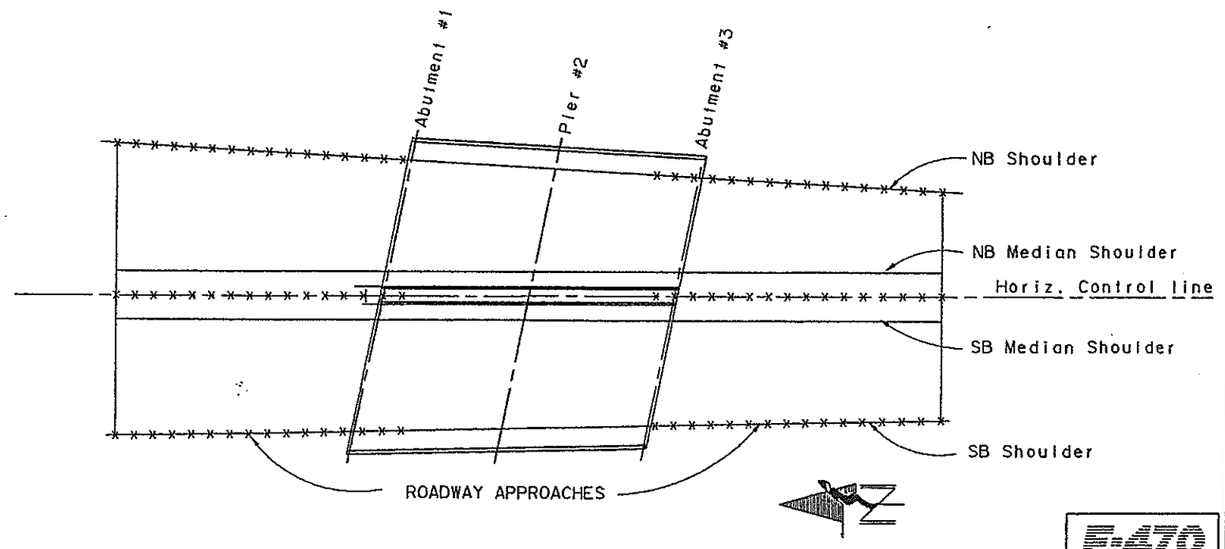

	INITIAL	DATE
Designed By	JHP	8-89
Checked By	AEG	8-89
Detailed By	GMC	8-89
Checked By	GNT	9-89
Quantities By	JHP	9-89
Checked By	GNT	9-89

SY24_: 05A3.1171.1/01SHNA0121.90Y

E-470 Engineer 470 Partnership

DIVISION OF HIGHWAYS

I-25 OVER SH 470/E-470
ROADWAY APPROACHES

Designer J. Peck	Structure Numbers	F-17-JU
Detailer G Christinachi		F-17-JV
Drawing Number B-31	of 31	Drawings

STATE OF COLORADO
STATE DEPARTMENT OF HIGHWAYS
DIVISION OF HIGHWAYS
C.D.O.H. FORM NO. 126
REV. FEB. 1984

AS CONSTRUCTED		
NO REVISIONS ☐	REVISED ☐	VOID ☐

FED. ROAD REGION	DIVISION	PROJ. NO.	SHEET NO.	SHEET TOTALS
VIII	Colorado	1A06/1B02	32	

REVISIONS			
A-1	4-2-90	REVISED QUANTITIES	D.K.M.

GENERAL NOTES

ALL WORK SHALL BE DONE ACCORDING TO THE STANDARD SPECIFICATIONS OF THE DIVISION OF HIGHWAYS, STATE OF COLORADO.

ELEVATIONS CONTAINED IN THESE PLANS ARE CALCULATED FROM A RECENT FIELD SURVEY. THE CONTRACTOR SHALL VERIFY ALL DEPENDENT DIMENSIONS IN THE FIELD BEFORE ORDERING OR FABRICATING ANY MATERIAL OR BEGINNING CONSTRUCTION OF BRIDGE WIDENING.

STATIONS AND DIMENSIONS CONTAINED IN THESE PLANS ARE CALCULATED FROM THE "AS CONSTRUCTED PLANS". THOSE STATIONS AND DIMENSIONS MAY BE ADJUSTED TO MEET THE EXISTING STRUCTURE. THE CONTRACTOR SHALL VERIFY ALL DEPENDENT DIMENSIONS IN THE FIELD BEFORE ORDERING OR FABRICATING ANY MATERIAL OR BEGINNING CONSTRUCTION OF BRIDGE WIDENING.

CLASS I FINISH, FOLLOWED BY APPLICATION OF A COLORED ACRYLIC COATING, WILL BE REQUIRED ON ALL EXPOSED CONCRETE SURFACES DOWN TO 1'-0" BELOW GROUND LINE. REQUIREMENTS FOR COATING ARE GIVEN IN REVISIONS OF SECTION 601, STRUCTURAL CONCRETE (COATING).

ALL EXTERIOR CONCRETE CORNERS SHALL BE CONSTRUCTED WITH ¾" CHAMFERS, UNLESS OTHERWISE NOTED.

GRADE 60 REINFORCING STEEL IS REQUIRED FOR #4 BARS AND LARGER. ALL REINFORCING STEEL SHALL BE EPOXY COATED, UNLESS NOTED OTHERWISE.

THE FOLLOWING TABLE GIVES THE MINIMUM CLASS "B" LAP SPLICE FOR EPOXY COATED REINFORCING BARS:

BAR SIZE	#4	#5	#6	#7	#8	#9	#10	#11
SPLICE LENGTH FOR CLASS B CONCRETE	1'-3"	1'-7"	2'-0"	2'-9"	3'-9"	4'-7"	5'-9"	7'-1"
SPLICE LENGTH FOR CLASS D CONCRETE	1'-3"	1'-7"	1'-10"	2'-3"	2'-11"	3'-7"	4'-9"	5'-10"

THE ABOVE SPLICE LENGTHS SHALL BE INCREASED BY 20 PERCENT FOR 3-BAR BUNDLES AND 33 PERCENT FOR 4-BAR BUNDLES

ANY SPLICES NOT SHOWN SHALL BE APPROVED BY THE ENGINEER.

ABBREVIATIONS:

E.W. = EACH WAY
E.F. = EACH FACE
F.F. = FAR FACE
N.F. = NEAR FACE
J = JUNCTION BOX
H.C.L. = HORIZONTAL CONTROL LINE
H.B.P. = HOT BITUMINOUS PAVEMENT
CONT. = CONTINUOUS
(B) = BLACK REINFORCING BAR (EPOXY COATED REINFORCING BAR MAY BE PROVIDED AT NO ADDITIONAL COST TO THE PROJECT).

THE INFORMATION SHOWN ON THESE PLANS CONCERNING TYPE AND LOCATION OF UNDERGROUND UTILITIES IS NOT GUARANTEED TO BE ACCURATE OR ALL- INCLUSIVE. THE CONTRACTOR IS RESPONSIBLE FOR MAKING HIS OWN DETERMINATION AS TO THE TYPE AND LOCATION OF UNDERGROUND UTILITIES AS MAY BE NECESSARY TO AVOID DAMAGE TO THEM.

PERMANENT STEEL BRIDGE DECK FORMS MAY BE USED.

STRUCTURE EXCAVATION AND BACKFILL SHALL BE IN ACCORDANCE WITH STANDARD M-206-2, UNLESS NOTED OTHERWISE. ADEQUATE SHORING OF THE EXCAVATION ADJACENT TO THE ROADWAYS SHALL BE PROVIDED DURING ALL PHASES OF CONSTRUCTION. METHOD OF SHORING SHALL BE APPROVED BY THE ENGINEER. PAYMENT FOR SHORING TO BE INCLUDED IN ITEM 206, STRUCTURE EXCAVATION.

THE CONTRACTOR IS RESPONSIBLE FOR THE STABILITY OF THE STRUCTURE DURING CONSTRUCTION

DESIGN DATA

CURRENT AASHTO SPECIFICATIONS:

LIVE LOAD: HS-20-44 AND INTERSTATE ALTERNATE
DEAD LOAD: ASSUMES 48 LBS. PER SQ. FT. FOR BITUMINOUS PAVEMENT

REINFORCED CONCRETE:

CLASS B CONCRETE: fc = 1,200 psi, n = 9: F'c = 3,000 psi AT 28 DAYS
CLASS D CONCRETE: fc = 1,800 psi, n = 8: F'c = 4,500 psi AT 28 DAYS
CLASS S CONCRETE: fc = 2,200 psi, n = 7: F'c = 5,500 psi AT 28 DAYS

REINFORCING STEEL: #4 BARS AND LARGER: fs = 24,000 psi, fy = 60,000 psi

PRESTRESSED CONCRETE: F'c = 270,000 psi, fs = (SEE DETAILS)

DESIGN METHODS:

ABUTMENT, PIER CAPS AND FOOTINGS, I-GIRDERS & SLAB: SERVICE LOAD DESIGN
PIER COLUMNS: LOAD FACTOR DESIGN

SUMMARY OF QUANTITIES

ITEM	DESCRIPTION	UNIT	STRUCTURE No. F-17-IE						
			SUPER-STRUCT.	ABUT #1	PIER #2	PIER #3	ABUT #4	APPROACH SLAB ②	TOTAL
202	Removal Of Portions Of Present Structure	L.S.	L.S.	L.S.	—	—	L.S.	L.S.	L.S.
③ 206	Structure Excavation	Cu. Yd.	—	220	151	151	229	—	751
206	Structure Backfill (Class 1)	Cu. Yd.	—	85	—	—	101	—	186
206	Structure Backfill (Class 2)	Cu. Yd.	—	39	128	128	49	—	344
403	Hot Bituminous Pavement (Grading E) (Haul And Asphalt) (Rubberized)	Ton	187	—	—	—	—	27	214
502	Steel Piling (HP 12 x 53)	Lin. Ft.	—	218	—	—	290	—	508
507	Concrete Slope And Ditch Paving (Reinforced)	Cu. Yd.	—	66	—	—	37	—	103
513	Bridge Drain (Special)	Each	1	—	—	—	—	—	1
515	Waterproofing (Membrane)	Sq. Yd.	864	—	—	—	—	125	989
518	Bridge Compression Joint Sealer	Lin. Ft.	—	7	—	—	7	157	171
① 601	Concrete Class B (Bridge)	Cu. Yd.	—	53	81	88	69	—	291
601	Concrete Class D (Bridge)	Cu. Yd.	286	34	—	—	49	71	440
602	Reinforcing Steel	LB	—	1090	3450	3450	1090	—	9080
602	Reinforcing Steel (Epoxy Coated)	LB	86,657	8,821	11,128	15,959	10,840	9125	142,530
606	Bridge Rail Type 4 (470)	Lin. Ft.	268	—	—	—	—	—	268
613	3 Inch Electrical Conduit	Lin. Ft.	298	—	—	—	—	—	298
618	Prestressed Concrete Unit (I Section) (70 To 75 Feet)	Each	4	—	—	—	—	—	4
618	Prestressed Concrete Unit (I Section) (60 To 65 Feet)	Each	1	—	—	—	—	—	1
618	Prestressed Concrete Unit (I Section) (55 To 60 Feet)	Each	4	—	—	—	—	—	4
618	Prestressed Concrete Unit (I Section) (50 To 55 Feet)	Each	3	—	—	—	—	—	3

① ½" Expansion Joint Material To Be Included In The Bid Price.
② Quantities Shown Include Both Approaches.
③ Includes 103 Cu. Yds. Structure Excavation for Concrete Slope and Ditch Paving (66 Cu. Yds. @ Abut. #1, 37 Cu. Yds. @ Abut. #4).

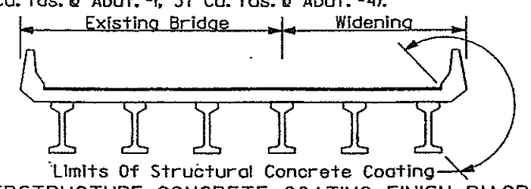

SUPERSTRUCTURE CONCRETE COATING FINISH DIAGRAM

DRAWING LIST

DWG. NO.	TITLE
B1	GENERAL INFORMATION AND SUMMARY OF QUANTITIES
B2	GENERAL LAYOUT
B3	ENGINEERING GEOLOGY
B4	CONSTRUCTION LAYOUT
B5	FOOTING AND PILING LAYOUT
B6	ABUTMENT #1 DETAILS
B7	ABUTMENT #4 DETAILS
B8	ABUTMENT DETAILS
B9	WING WALL DETAILS
B10	RETAINING WALL AND BRIDGE RAIL TYPE 4 (470)
B11	PIER #2
B12	PIER #3
B13	SUPERSTRUCTURE DETAILS #1
B14	SUPERSTRUCTURE DETAILS #2
B15	COLORADO G54 GIRDER
B16	SLOPE PAVING DETAILS
B17	APPROACH SLAB DETAILS
B18	BRIDGE DECK ELEVATIONS #1
B19	BRIDGE DECK ELEVATIONS #2
B20	BRIDGE DECK ELEVATIONS #3
B21	DECK DRAINAGE DETAILS #1
B22	DECK DRAINAGE DETAILS #2
B23	ROADWAY APPROACHES

A-1 / B — CROSS REFERENCE DRAWING NUMBER; SECTION OR DETAIL IDENTIFICATION

BRIDGE DESCRIPTION

WIDENING OF 3-SPAN (52'-8⅝", 65'-0", 49'-11½") BRIDGE. CONTINUOUS PRECAST PRESTRESSED CONCRETE GIRDERS WITH CAST-IN-PLACE DECK SLAB. VARIABLE ROADWAY WIDTH, VARIABLE SKEW. BRIDGE RAIL TYPE 4 (470)

SB I-25 To WB C470

DIVISION OF HIGHWAYS

RAMPS A AND F OVER SW RAMP
BRIDGE WIDENING

GENERAL INFORMATION AND SUMMARY OF QUANTITIES

Station	241+56.00 to 241+28.00		
Near : Littleton	Sec. 3 T. 6S R. 67W		
Designer J. Showers		Structure Numbers	F-17-IE
Detailer R. Bretz			
Drawing Number	B1 of 23 Drawings		

E-470 — Engineer 470 Partnership

CHECKED BY	INITIAL	DATE	DESIGNED BY	CHECKED BY
QUANTITIES BY	D.M.	3/90	CHECKED BY	
CHECKED BY	R.B.	3/90	DETAILED BY	

Revision Dates (Preliminary Stage 5-4)

QSA2:[40,144]125GN02.90A

BRS 1990 (4-90) M-21

STATE OF COLORADO
STATE DEPARTMENT OF HIGHWAYS
DIVISION OF HIGHWAYS
S.H. FORM NO. 1266
REV. FEB. 1964

AS CONSTRUCTED
NO REVISIONS ☐ REVISED ☐ VOID ☐

FED. ROAD REGION	DIVISION	PROJ. NO.	SHEET NO.	SHEET TOTAL
VIII	Colorado	IA06/IB82	33	

REVISIONS		

DESIGNED BY	CHECKED BY	DETAILED BY	CHECKED BY	QUANTITIES BY	CHECKED BY
J.S.	D.M.	R.B.			
DATE 3/90	DATE 3/90	DATE 3/90			

CURVE DATA
RAMP A
HORIZONTAL CONTROL LINE

P.I. = 2414+32.63
△c = 21°39' 29" LT.
Rc = 1909.86'
Lc = 710.82'
Tc = 359.57'
Dc = 3°00'00"

RAMP F STA. 628+21.57
S.W. RAMP STA. 237+66.75

RAMP F
STA. 627+14.91
BACK FACE ABUT. 1

STA. 627+29.48
PT CURVE F-1
RAMP F

RAMP F
STA. 627+73.69
℄ PIER 2

BEGIN RAMP F
P.C. CURVE F-1 STA. 626+87.48
= S.W. RAMP STA. 2413+20.44 EXIST. RAMP A

STA. 628+91.63
P.C. CURVE F-2
RAMP F

RAMP F
STA. 628+45.96
℄ PIER 3

CONCRETE SLOPE PAVING (TYP)

PROFILE LINE
S.W. RAMP

10' RECREATIONAL TRAIL. SEE RECREATIONAL TRAIL TYPICAL SECTIONS FOR DETAILS.

TO CASTLE ROCK

TO PARKER

SLOPE PAVING LIMITS

APPROACH SLAB

33°54'34.6"

S8°43'10.6"W

RAMP F
STA. 629+06.15
BACK FACE ABUT. 4

PROFILE LINE RAMP F

627

628

629

RAMP A
STA. 2413+28.00
BACK FACE ABUT. 1
STR. NO. F-17-IE

STR. F-17-IE

38°40'1.70" FROM TANGENT AT STA. 2412+29.62 RAMP A

TO LITTLETON

PROFILE LINE RAMP A

2413 2412 2411

RAMP A
STA. 2411+56.00
BACK FACE ABUT. 4
STR. NO. F-17-IE

ELEC. LINE IN BRIDGE

RAMP A
STA. 2412+08.00
℄ PIER 3
STR. NO. F-17-IE

RAMP A STA. 2412+29.72 =
S.W. RAMP STA. 237+13.20

EXIST. CULVERT

RAMP A
STA. 2412+73.00
℄ PIER 2
STR. NO. F-17-IE

S 25°24' E

CONCRETE SLOPE AND DITCH PAVEMENT

1'-9" 10'-0" SHLDR. 12'-0" LANE 12'-0" LANE 10'-0" SHLDR. 1'-9"

4'-0" 15'-0" 6'-0" 4'-0" TYP

5895 5900 5905 5910

CURVE DATA
RAMP F
HORIZONTAL CONTROL LINE
CURVE F-1

P.I. = 627+08.48
△c = 196° 33.5' RT.
Rc = 1885.86'
Lc = 41.99'
Tc = 20.99'
Dc = 3°02'17.4"

CURVE DATA
RAMP F
HORIZONTAL CONTROL LINE
CURVE F-2

P.I. = 632+72.77
△c = 42°32' 47.5' LT.
Rc = 978.93'
Lc = 726.93'
Tc = 381.14'
Dc = 5°51'10.4"

PLAN

INDICATES LOCATION OF MINIMUM VERTICAL CLEARANCE

INDICATES EXISTING STRUCTURE TO BE REMOVED

172'-0"
2'-3⅜" 52'-8⅝" 65'-0" 49'-11½" 2'-0½"

℄ PIER 2 ℄ PIER 3 ℄ BRG.
℄ BRG. ℄ BK. BRG. ℄ BK. BRG.
℄ AH. BRG. ℄ AH. BRG.
10¾" 10¾" 10¾" 10¾"

BACK FACE ABUT. 1
BACK FACE ABUT. 4
MIN. CLR.

*EL. 5910.87
*EL. 5911.49
*EL. 5912.20
*EL. 5912.59

5920 5910 5900 5890 5880

STEEL PILING (HP 12x53) (TYP)

PROFILE LINE S.W. RAMP

MIN. CLR. 16'-6"

6'-0"

**3'-0" MIN. CLR.

10' RECREATIONAL TRAIL. SEE RECREATIONAL TRAIL TYPICAL SECTIONS FOR DETAILS.

SECTION
(TAKEN AT PROFILE LINE RAMP A)

2413 2412 2411

*INDICATES FINISHED ROADWAY ELEVATIONS AT TOP OF EXISTING PAVEMENT ON PROFILE LINE RAMP A. SEE NOTE 4.

**MEASURED PERPENDICULAR TO S.W. RAMP.

1000' VC
STA. 2407+50
El. 5917.61
-1.17%
4.66%
LOCATION OF STRUCTURE
STATION AHEAD

PROFILE GRADE STR F-17-IE RAMP A
(SEE NOTE 4)

600' VC
STR. F-17-IE
STA. 240+00
El. 5890.90
-1.05%
-1.81%
0.54%
STA. 234+00
El. 5887.12
600' VC

PROFILE GRADE S.W. RAMP
(SEE NOTE 4)

WIDTH VARIES
NEW DECK SLAB & BRIDGE RAIL
SPANS 1, 2 & 3
EXISTING STRUCTURE F-17-IE

1'-9" RAIL 10'-0" SHLDR. 12'-0" LANE 12'-0" LANE VARIES 12'-0" LANE 12'-0" LANE 10'-0" SHLDR. 1'-9" RAIL

2" HOT BITUMINOUS PAVEMENT (RUBBERIZED) OVER WATERPROOFING MEMBRANE (TYP)

HORIZONTAL CONTROL LINE & EXISTING PROFILE GRADE RAMP A

HORIZONTAL CONTROL LINE & PROFILE GRADE RAMP F

0.053'/'

VARIES

BRIDGE RAIL TYPE 4 (470)(TYP.)

PRESTRESSED CONCRETE GIRDERS (G-54), NUMBER OF ADDITIONAL GIRDER LINES VARIES FROM 3 PER SPAN TO 5 PER SPAN SEE CONSTRUCTION LAYOUT, DWG. NO. B4, FOR ADDITIONAL INFORMATION

NEW PIER CAP

4'-6" (TYP.)

NEW COLUMNS

TYPICAL SECTION
(LOOKING UP-STATION RAMP A)

NOTES:

1. LIVE LOADING: HS-20-44 AND INTERSTATE ALTERNATE
2. (F) IS FIXED BEARING
3. LAYOUT IS BASED ON LAYOUT OF EXISTING RAMP A BRIDGE, STRUCTURE F-17-IE, FEDERAL AID PROJECT I-25-2(153). CONTRACTOR TO VERIFY EXISTING STRUCTURE GEOMETRY PRIOR TO BEGINNING OF CONSTRUCTION OF BRIDGE WIDENING.
4. VERTICAL GEOMETRY IS BASED ON E-470 SURVEY OF EXISTING RAMP A BRIDGE. CONTRACTOR TO VERIFY PRIOR TO BEGINNING OF CONSTRUCTION.
5. SEE ROADWAY DWGS. FOR INFORMATION REGARDING SITE GRADING, RETAINING WALLS, DRAINAGE & UTILITIES.

E-470
Engineer 470 Partnership

DIVISION OF HIGHWAYS

RAMPS A AND F OVER SW RAMP
BRIDGE WIDENING

GENERAL LAYOUT

Designer	J. Showers	Structure Numbers	F-17-IE
Detailer	R. Bretz		
Drawing Number	B2 of 23 Drawings		

Revision Dates	(Preliminary Stage Only)

QSA2:[40,144]I25PE01.DGN

FED ROAD REG NO.	DIVISION	PROJECT NO.	SHEET NO.	TOTAL SHEETS
VIII	COLORADO	1A66/1B02	34	

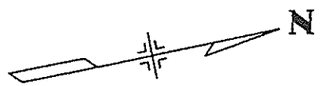

APPROXIMATE SCALE : 1" = 20'

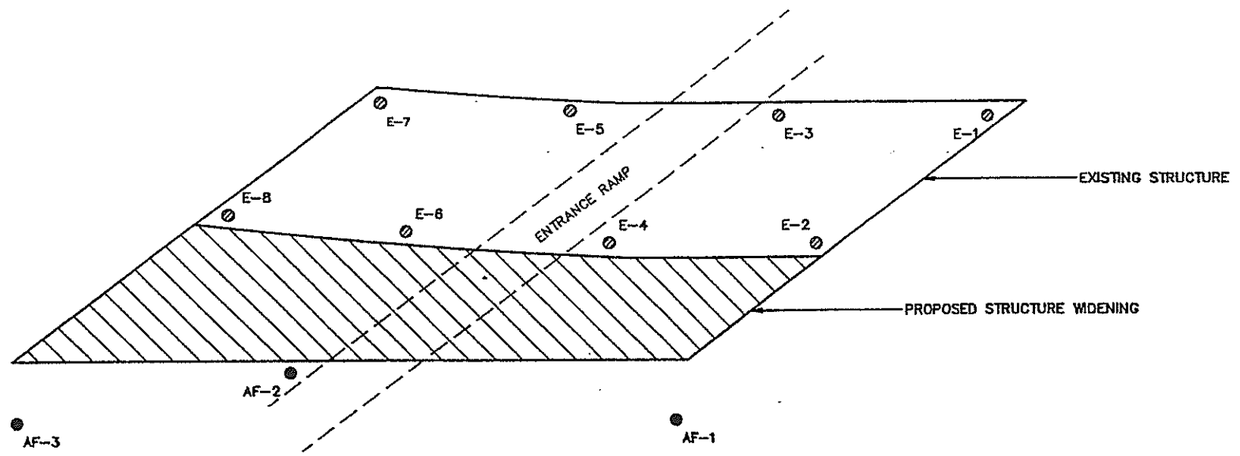

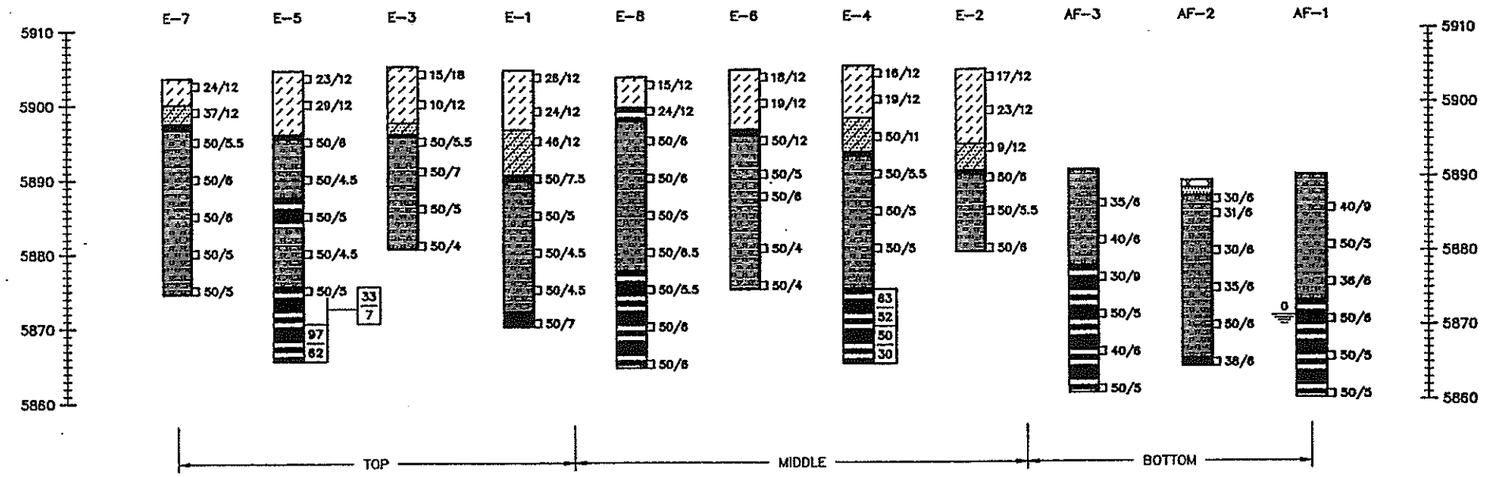

SUMMARY OF TEST RESULTS

Sample No.	Depth	Classification: Corp. of Engrs. of Visual	Classification: AASHTO	Grading Analysis: Percent Gravel	Coarse Sand	Fine Sand	Silt and Clay	Atterberg Limits: Liquid Limit LL	Plastic Limit PL	Plasticity Index PI	Water Cont. W %	Wet Unit Weight γ P.C.F.	Unconfined Strength Qu T.S.F.	Triaxial Shear Strength: φ°	C P.S.I.	Dia. of Sample (Inches)
AF-1	9	Sandstone					23				10.4	121				1.935
AF-1	19	Claystone					77	49	30		17.5	133				1.935
AF-1	24	Claystone									15.7	131	12.3			1.935
AF-2	9	Sandstone									16.7	127				1.935
AF-2	14	Sandstone					8				15.1	127				1.935
AF-3	4	Sandstone					9				6.7	107				1.935
AF-3	14	Claystone									17.4	129				1.935
AF-3	19	Claystone									13.3		10.2			1.935
AF-3	24	Claystone									14.9	136				1.935

TYPE OF MATERIAL

- Fill, clay, sandy, asphalt oil, stiff, moist, brown, black.
- Clay, sandy.
- Sand, silty.
- Sand, clean, medium dense, dry, brown, rust.
- Sandstone bedrock, clean to silty, poorly cemented, hard to very hard, dry to moist, lt. gray, brown, rust.
- Claystone bedrock, silty to sandy, hard to very hard, moist, gray, maroon.

LEGEND

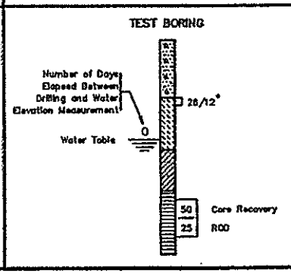

- DRIVE SAMPLE

The symbol 26/12 indicates 26 blows of a 140 pound hammer falling 30 inches were required to drive a 2.5 inch o.d. sampler 12 inches.

- Location of New Test Boring
- Location of Existing Test Boring

NOTES

1. Borings E-1 through E-8 were drilled and logged by others for the existing structure.
2. No free water was measured in the borings at the time of drilling.

E-470

RAMP A/F BRIDGE E-470 AT I-25

ENGINEERING GEOLOGY

CTL/Thompson, Inc.

Drawn by WJW
Checked by CSM
Date September 1989

STRUCTURE F-17-IE
DWG NO. B 3 OF 23

STATE OF COLORADO
STATE DEPARTMENT OF HIGHWAYS
DIVISION OF HIGHWAYS
C.D.O.H. FORM NO. 126
REV. FEB. 1984

AS CONSTRUCTED					
NO REVISIONS ☐	REVISED ☐	VOID ☐			

FED. ROAD REGION	DIVISION	PROJ. NO.	SHEET NO.	SHEET TOTAL
VIII	Colorado	IA06/IB02	35	

REVISIONS			
A-1	4-2-90	Added Girder ℄	DKM

DESIGNED BY	INITIAL	DATE
CHECKED BY	J.S.	3/90
QUANTITIES BY	D.M.	3/90
CHECKED BY		3/90
DETAILED BY	R.B.	3/90

* Dimensions Shown Along Outside Edge Of Barrier.

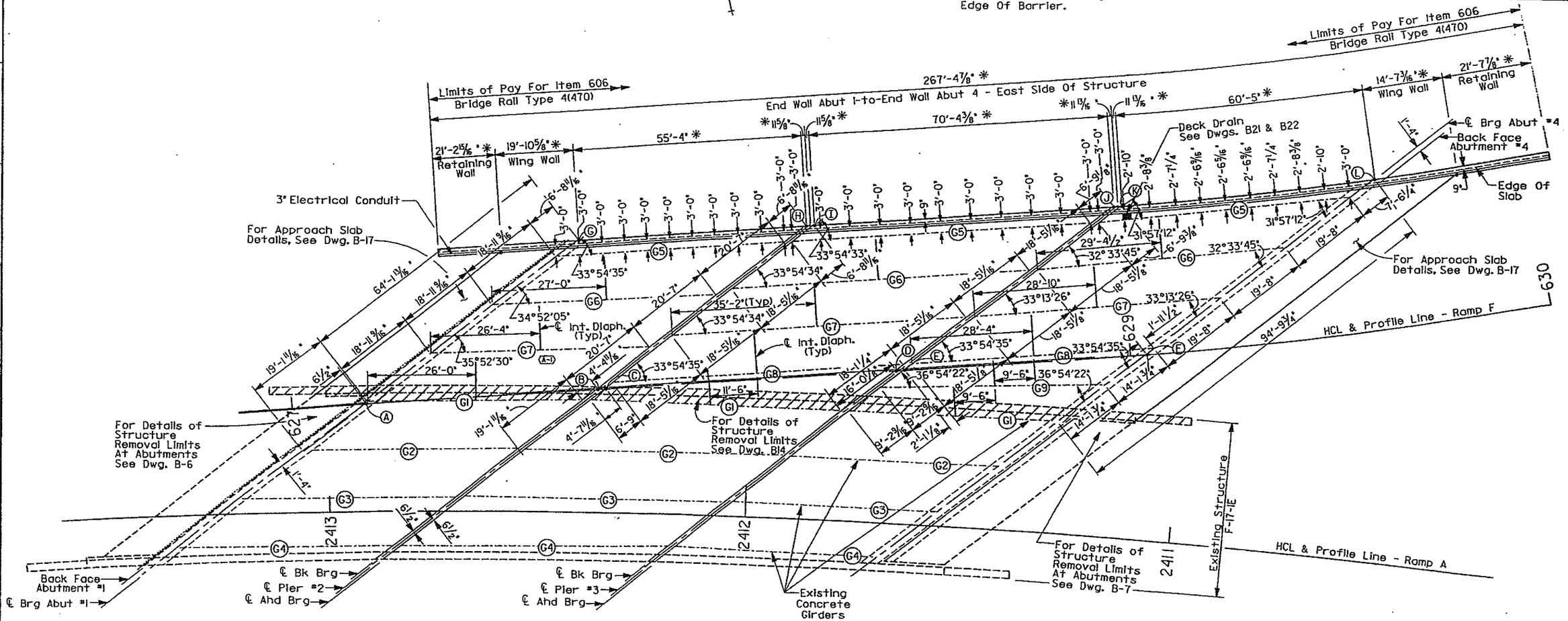

Indicates Existing Structure To Be Removed

COORDINATE LIST

POINT	DESCRIPTION	N	E	RAMP F STA	OFFSET
Ⓐ	℄ BRG AT ABUT 1 & HCL RAMP F	629139.5542	177874.9416	627+17.32	0.00
Ⓑ	℄ BK BRG AT PIER 2 & HCL RAMP F	629084.7887	177866.5818	627+72.72	0.00
Ⓒ	℄ AHD BRG AT PIER 2 & HCL RAMP F	629082.8711	177866.2877	627+74.66	0.00
Ⓓ	℄ BK BRG AT PIER 3 & HCL RAMP F	629013.3540	177855.6257	628+44.99	0.00
Ⓔ	℄ AHD BRG AT PIER 3 & HCL RAMP F	629011.4364	177855.3316	628+46.93	0.00
Ⓕ	℄ BRG AT ABUT 4 & HCL RAMP F	628955.3017	177846.7976	629+03.71	0.00
Ⓖ	℄ BRG AT ABUT 1 & O.F. OF BARRIER	629081.5000	177902.2455	627+70.56	35.75'
Ⓗ	℄ BK BRG AT PIER 2 & O.F. OF BARRIER	629026.8043	177893.8567	628+25.90	35.75'
Ⓘ	℄ AHD BRG AT PIER 2 & O.F. OF BARRIER	629024.8848	177893.5623	628+27.84	35.75'
Ⓙ	℄ BK BRG AT PIER 3 & O.F. OF BARRIER	628955.3293	177882.9176	628+98.46	35.75'
Ⓚ	℄ AHD BRG AT PIER 3 & O.F. OF BARRIER	628953.3852	177882.6353	629+00.50	35.75'
Ⓛ	℄ BRG AT ABUT 4 & O.F. OF BARRIER	628893.3429	177875.9377	629+63.21	35.75'

Note:

1. Layout Based On Construction Layout Of Existing Ramp A Bridge, Structure F-17-IE, Federal Aid Project I-25-2(153). Contractor To Verify Existing Structure Geometry Prior To Beginning Of Construction Of Bridge Widening.
2. See Dwg. B14 For Additional Layout Information.
3. All Edge Offsets Are Placed At 10th Points and Normal To The Exterior Girder.

E-470
Engineer 470 Partnership

DIVISION OF HIGHWAYS

RAMPS A AND F OVER SW RAMP
BRIDGE WIDENING

CONSTRUCTION LAYOUT

Designer	J. Showers	Structure Numbers	F-17-IE
Detailer	R. Bretz		
Drawing Number	B4 of 23 Drawings		

Revision Dates (Preliminary Stage Only.)

QSA2:[40,144]AFCL01.90F

STATE OF COLORADO
STATE DEPARTMENT OF HIGHWAYS
DIVISION OF HIGHWAYS
C.D.O.H. FORM NO. 1261
REV. FEB. 1984

AS CONSTRUCTED
NO REVISIONS ☐ REVISED ☐ VOID ☐

FED. ROAD REGION	DIVISION	PROJ. NO.	SHEET NO.	SH TOT
VIII	Colorado	IA06/IB⊕2	36	

REVISIONS		

PILING INFORMATION

LOCATION	PILING SIZE	MAX PILE DESIGN LOAD	EST. TIP ELEVATION
Abut 1	HP 12x53	88 Tons	5885.0
Retaining Wall At Abut 1	HP 12x53	51 Tons	5885.0
Abut 4	HP 12x53	82 Tons	5885.0
Retaining Wall At Abut 4	HP 12x53	51 Tons	5885.0

SPREAD FOOTING DESIGN PRESSURES

LOCATION	MAXIMUM FOOTING DESIGN PRESSURE
Pier 2	4.60 K / Sq. Ft.
Pier 3	6.40K / Sq. Ft.

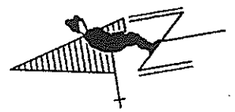

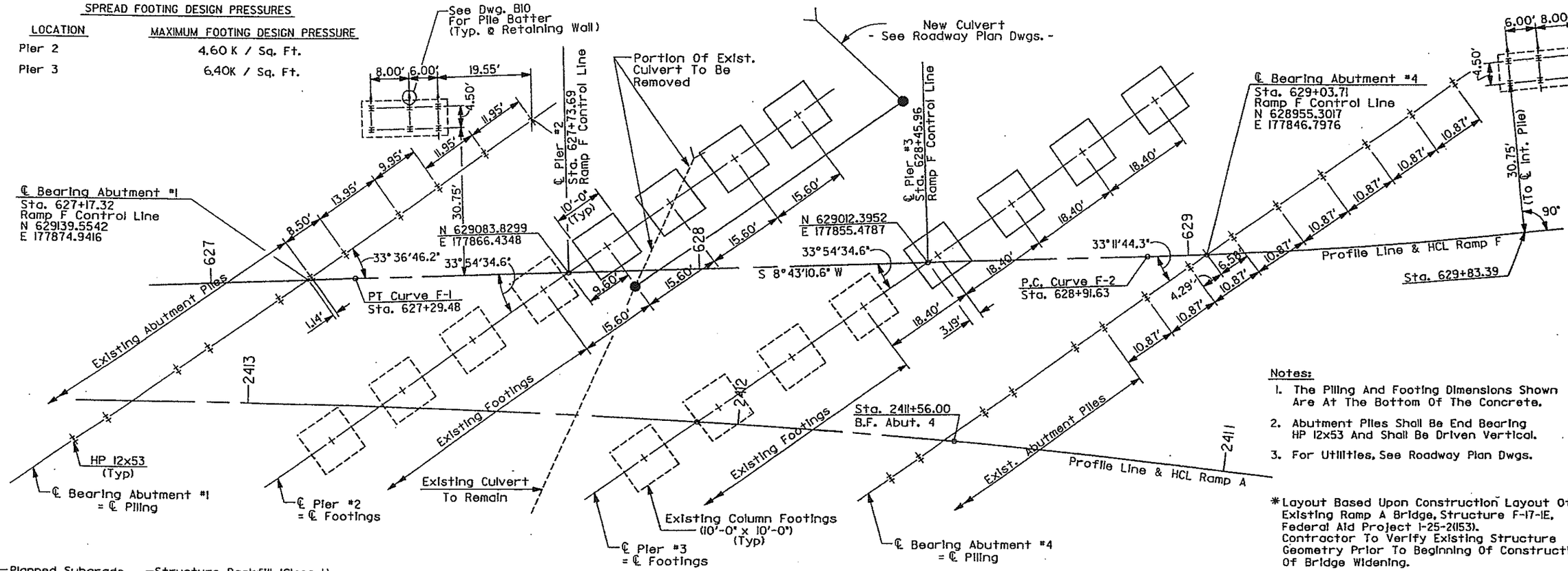

Notes:

1. The Piling And Footing Dimensions Shown Are At The Bottom Of The Concrete.
2. Abutment Piles Shall Be End Bearing HP 12x53 And Shall Be Driven Vertical.
3. For Utilities, See Roadway Plan Dwgs.

*Layout Based Upon Construction Layout Of Existing Ramp A Bridge, Structure F-17-IE, Federal Aid Project I-25-2(153). Contractor To Verify Existing Structure Geometry Prior To Beginning Of Construction Of Bridge Widening.

FOOTING & PILING LAYOUT *

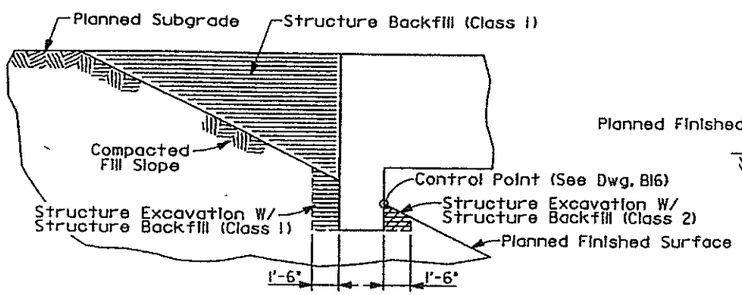

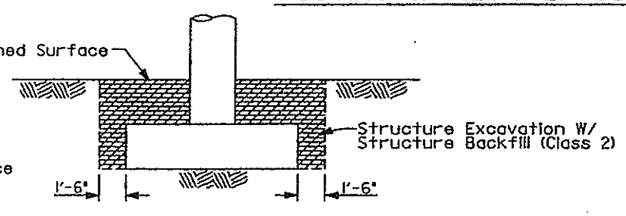

STRUCTURE EXCAVATION & BACKFILL DETAILS

INITIAL	DATE
DESIGNED BY J.S.	3/90
CHECKED BY D.M.	3/90
DETAILED BY R.B.	3/90
QUANTITIES BY	
CHECKED BY	

E-470
Engineer 470 Partnership

DIVISION OF HIGHWAYS

RAMPS A AND F OVER SW RAMP BRIDGE WIDENING

FOOTING & PILING LAYOUT

Designer J. Showers	Structure Numbers	F-17-IE
Detailer R. Bretz		
Drawing Number B5 of 23 Drawings		

Revision Dates (Preliminary Stage Only)								

OSA2:[40,144]AFFPLI.90G

STATE OF COLORADO
STATE DEPARTMENT OF HIGHWAYS
DIVISION OF HIGHWAYS
S. H. FORM NO. 126
REV. FEB. 1984

AS CONSTRUCTED

NO REVISIONS ☐ REVISED ☐ VOID ☐

FED. ROAD REGION	DIVISION	PROJ. NO.	SHEET NO.	SHEET TOTAL
VIII	Colorado	IA06/IBØ2	37	

REVISIONS		

	DATE	INITIAL
DESIGNED BY	3/90	D.M.
CHECKED BY	3/90	C.R.
DETAILED BY	3/90	R.B.
QUANTITIES BY	3/90	D.M.
CHECKED BY	3/90	C.R.

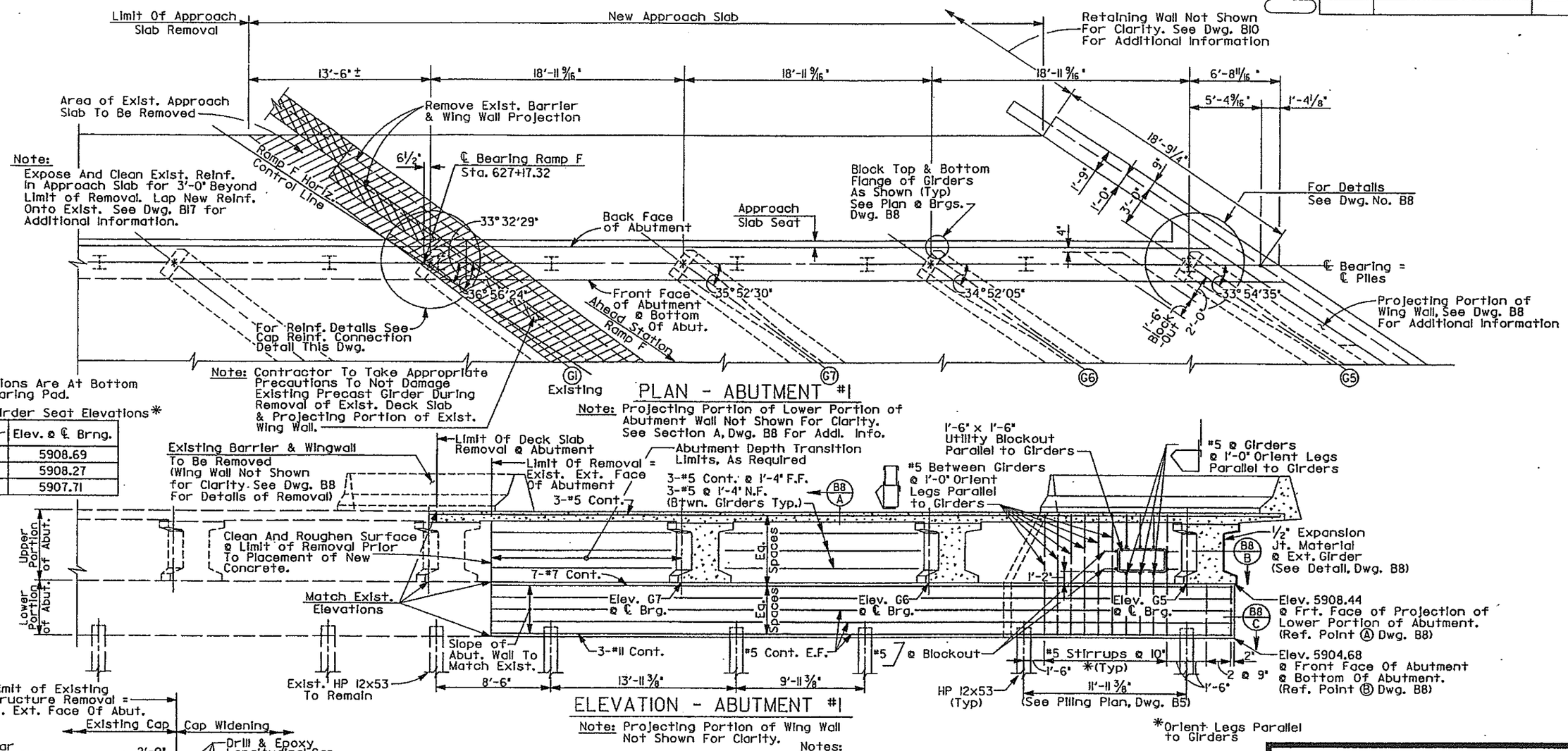

*Elevations Are At Bottom Of Bearing Pad.

Table of Girder Seat Elevations*

Girder	Elev. ℄ Brng.
G5	5908.69
G6	5908.27
G7	5907.71

Note: Contractor To Take Appropriate Precautions To Not Damage Existing Precast Girder During Removal of Exist. Deck Slab & Projecting Portion of Exist. Wing Wall.

PLAN - ABUTMENT #1

Note: Projecting Portion of Lower Portion of Abutment Wall Not Shown For Clarity. See Section A, Dwg. B8 For Addl. Info.

*Orient Legs Parallel to Girders

ELEVATION - ABUTMENT #1

Note: Projecting Portion of Wing Wall Not Shown For Clarity.

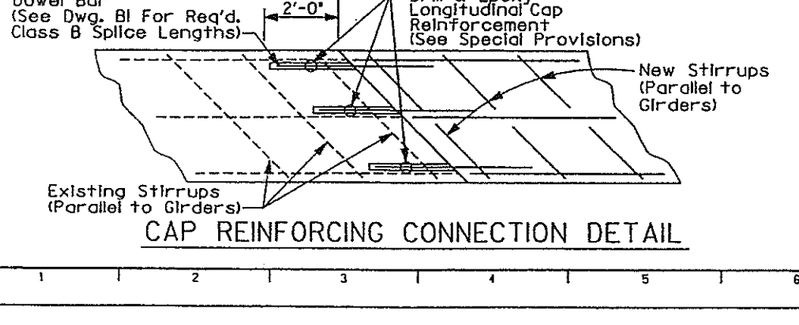

CAP REINFORCING CONNECTION DETAIL

Breakout & Removal Legend

- ▨ - Limits of Deck Slab, Barrier & Approach Slab Removal
- ▩ - Limits of Full Removal

Notes:

1. For Barrier Details, See Dwg. B14.
2. For Wing Wall Details, See Dwg. B9.
3. At Limits of Existing Structure Removal, Saw Cut 1" Into Existing Exposed Concrete Surfaces Prior To Removal.
4. Layout Is Based On Layout Of Existing Ramp A Bridge, Structure F-17-IE, Federal Aid Project I-25-2(153). Contractor To Verify Existing Structure Geometry Prior To Beginning Of Construction Of Bridge Widening.
5. Vertical Geometry Is Based On E-470 Survey Of Existing Ramp A Bridge. Contractor To Verify Prior To Beginning Of Construction.

E-470
Engineer 470 Partnership

DIVISION OF HIGHWAYS

RAMPS A AND F OVER SW RAMP BRIDGE WIDENING

ABUTMENT #1 DETAILS

Designer	D. McDaniel	Structure Numbers	F-17-IE
Detailer	R. Bretz		
Drawing Number	B6 of 23 Drawings		

Revision Dates (Preliminary Stage Only)

OSA2:[40,144]AFAD2.90J

STATE OF COLORADO
STATE DEPARTMENT OF HIGHWAYS
DIVISION OF HIGHWAYS
S.O.H. FORM NO. 126
REV. FEB. 1984

AS CONSTRUCTED			
NO REVISIONS ☐	REVISED ☐	VOID ☐	

FED. ROAD REGION	DIVISION	PROJ. NO.	SHEET NO.	SHEET TOTA
VIII	Colorado	IA06/1B⌀2	38	

REVISIONS		

	INITIAL	DATE
DESIGNED BY	D.M.	3/90
CHECKED BY	D.M.	3/90
DETAILED BY	R.B.	3/90
QUANTITIES BY	C.R.	3/90
CHECKED BY		

Retaining Wall Not Shown For Clarity. See Dwg. B10 For Additional Information

New Approach Slab

1'-6⅜" | 6'-1 7/16" | 19'-8" | 19'-8" | 19'-8" | 14'-1¾" | 7'-3"± | 14'-1¾"

Limit of Existing Approach Slab Removal

1'-11½"

Remove Exist. Barrier & Wing Wall Projection

Area of Exist. Approach Slab to be Removed

24"

Note: Expose & Clean Exist. Reinf. In Approach Slab for 3'-0" Beyond Limit of Removal. Lap New Reinf. Onto Exist. See Dwg. B17 For Addl. Info.

R=944.93'

1'-0" | 1'-9" | 8"

15'-11 3/16" Along Outside Face of Wingwall

For Details See Dwg. No. B8

Approach Slab Seat

4"

Block Top & Bottom Flange of Girders As Shown (Typ) See Plan @ Brgs. Dwg. B8

Back Face of Abutment

Ahead Station Ramp F

Ramp F Horiz. Control Line

℄ Bearing Ramp F Sta. 629+03.71

33 11'43" @ HCL

For Reinf. Details See Cap Reinf. Connection Detail This Dwg.

℄ Bearing = ℄ Piles

Exist. G1

Slab Breakout Parallel To Exist. Girder G1 As Shown. See Dwg. B13 For Addl. Info.

31°57'12" | 32°33'45" | 33°13'26" | 33°54'35" | 36°54'22" | 40°23'17"

1'-6" Block Out

2'-0"

Front Face of Abutment @ Bottom Of Abut.

Projecting Portion of Wing Wall, See Dwg. B8 For Additional Information

G5 | G6 | G7 | G8 | G9

Note: Contractor To Take Appropriate Precautions To Not Damage Existing Precast Girder During Removal of Exist. Deck Slab & Projecting Portion of Exist. Wing Wall

Limit Of Exist. Approach Slab & Deck Slab Removal

PLAN - ABUTMENT #4

Note: Projecting Portion of Lower Portion of Abutment Wall Not Shown For Clarity. See Section A, Dwg. B8 For Addl. Info.

#5 @ 1'-0" @ Girders & Blockout Orient Legs Parallel To Girders

#5 @ 1'-0" Btwn. Girds. Orient Legs Parallel To Girders

1'-6" x 1'-6" Utility Blockout Parallel to Girders

#5 @ Blockout

3-#5 Cont. F.F.

3-#5 Cont.

3-#5 @ 1'-4" N.F. (Typ. Btwn. Girds.)

B8 A

Limit Of Exist. Structure Removal = Exist. Exterior Face of Abut

Exist. Barrier & Wingwall To Be Removed (Wingwall Not Shown For Clarity. See Dwg. B8 For Details of Removal.

½" Expansion Jt. Material (Ext. Girder Only) (See Detail, Dwg. B8)

B8 B

Elev. 5908.65 @ Frt. Face of Projection of Lower Portion of Abutment. (Ref. Point Ⓐ Dwg. B8)

B8 C

Elev. 5904.70 @ Front Face Of Abutment @ Bottom Of Abutment. (Ref. Point Ⓑ Dwg. B8)

1'-2"

Elev. G5 @ ℄ Brg.

Elev. G6 @ ℄ Brg.

Elev. G7 @ ℄ Brg.

Elev. G8 @ ℄ Brg.

Elev. G9 @ ℄ Brg.

Eq. Spaces

7-#7 Cont.

3-#11 Cont.

#5 Cont. E.F.

Match Exist. Elevations

Upper Portion of Abutment

Clean & Rougher Surface @ Limit of Removal Prior To Placement of New Concrete

Lower Portion of Abutment

#5 Stirrups @ 10" (Typ)

1'-6" | 1'-6"

10'-10½"±

See Piling Plan, Dwg. B5

HP 12x53 (Typ)

Slope of Abut. Wall To Match Existing

Exist. HP 12x53 To Remain

Limit Of Abutment Depth Transition As Required

ELEVATION - ABUTMENT #4

Note: Projecting Portion of Wing Wall Not Shown For Clarity.

Breakout & Removal Legend

- Limits of Deck Slab, Barrier & Approach Slab Removal
- Limits of Full Removal

Limit of Existing Structure Removal = Exist. Ext. Face of Abut.

Cap Widening | Existing Cap

2'-0"

Dowel Bar (Typ) See Dwg. B1 For Req'd. Class B Splice Lengths

Drill & Epoxy Longitudinal Cap Reinforcement (See Special Provisions)

New Stirrups (Parallel to Girders)

Existing Stirrups (Parallel to Girders)

CAP REINFORCING CONNECTION DETAIL

Table of Girder Seat Elev's

Girder	Elev. @ ℄ Brng.
G5	5908.90
G6	5909.10
G7	5909.23
G8	5908.28
G9	5908.93

*Elevations Are At Bottom Of Bearing Pad.

Notes:

1. For Barrier Details, See Dwg. B14.
2. For Wing Wall Details, See Dwg. B9.
3. At Limits of Existing Structure Removal, Saw Cut 1" Into Existing Exposed Concrete Surfaces Prior To Removal.
4. Layout Is Based On Layout Of Existing Ramp A Bridge, Structure F-17-IE, Federal Aid Project I-25-2(153). Contractor To Verify Existing Structure Geometry Prior To Beginning Of Construction Of Bridge Widening.
5. Vertical Geometry Is Based On E-470 Survey Of Existing Ramp A Bridge. Contractor To Verify Prior To Beginning Of Construction.

E-470 Engineer 470 Partnership

DIVISION OF HIGHWAYS

RAMPS A AND F OVER SW RAMP BRIDGE WIDENING

ABUTMENT #4 DETAILS

Designer	D. McDaniel	Structure Numbers	F-17-IE
Detailer	R. Bretz		

Drawing Number B7 of 23 Drawings

Revision Dates								(Preliminary Stage Only)

QSA2:[40,144]AFAD3.90J

FED. ROAD REGION	DIVISION	PROJ. NO.	SHEET NO.	SHEET TOTAL
VIII	Colorado	IA06/1862	39	

AS CONSTRUCTED

NO REVISIONS ☐ REVISED ☐ VOID ☐

REVISIONS

SECTION (B6/A) (B7/A)

Note:
Abutment Diaphragm To Be Poured Monolithic With Deck Slab.

ACUTE CORNER DETAIL
Abutment 1

OBTUSE CORNER DETAIL
Abutment 4

SECTION (B6/B) (B7/B)

ACUTE CORNER DETAIL
Abutment 1

OBTUSE CORNER DETAIL
Abutment 4

SECTION (B6/C) (B7/C)

DETAIL OF REMOVAL OF EXISTING WINGWALLS

PLAN AT BEARINGS

DESIGNED BY	D.M.	CHECKED BY	D.M. 3/90
CHECKED BY	C.R.	QUANTITIES BY	D.M. 3/90
DETAILED BY	R.B.	CHECKED BY	C.R. 3/90

Initial / Date: D.M. 3/90; C.R. 3/90; R.B. 3/90

E-470
Engineer 470 Partnership

DIVISION OF HIGHWAYS

RAMPS A AND F OVER SW RAMP
BRIDGE WIDENING

ABUTMENT DETAILS

Designer	D. McDaniel	Structure Numbers	F-17-IE
Detailer	R. Bretz		

Drawing Number B8 of 23 Drawings

Revision Dates (Preliminary Stage Only)

ATE OF COLORADO
ATE DEPARTMENT OF HIGHWAYS
ISION OF HIGHWAYS
O.H. FORM NO. 126
V. FEB. 1984

AS CONSTRUCTED						
NO REVISIONS ☐	REVISED ☐	VOID ☐	FED. ROAD REGION	DIVISION	PROJ. NO.	SHEET NO.	SHEET TOTAL
			VIII	Colorado	IA06/15ø2	4ø	

REVISIONS		

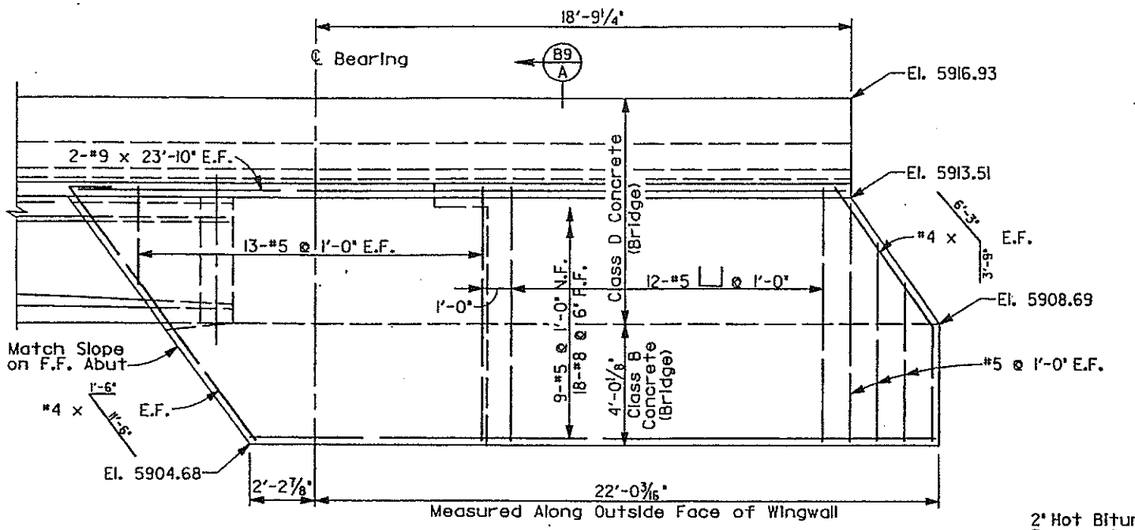

ELEVATION OF EAST WINGWALL @ ABUTMENT #1

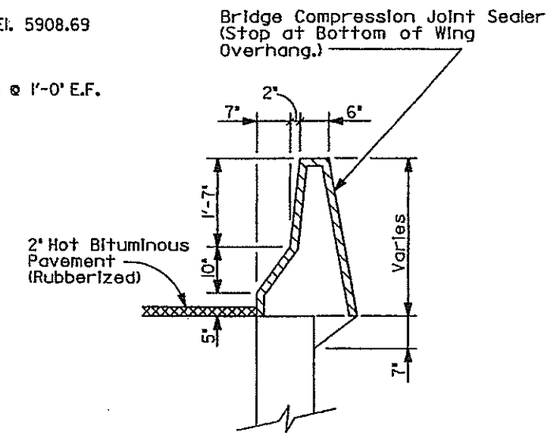

VIEW AT END OF WING

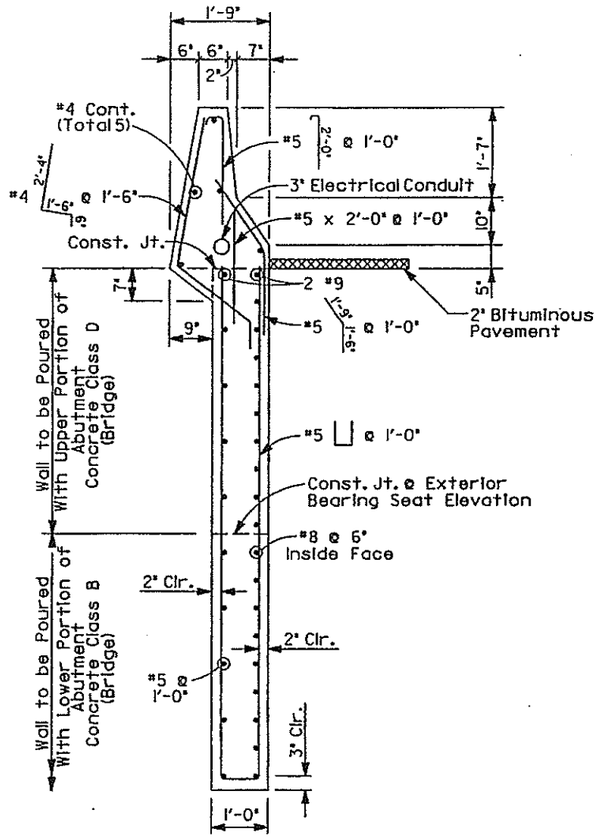

SECTION
Wing Wall Section
B9
A

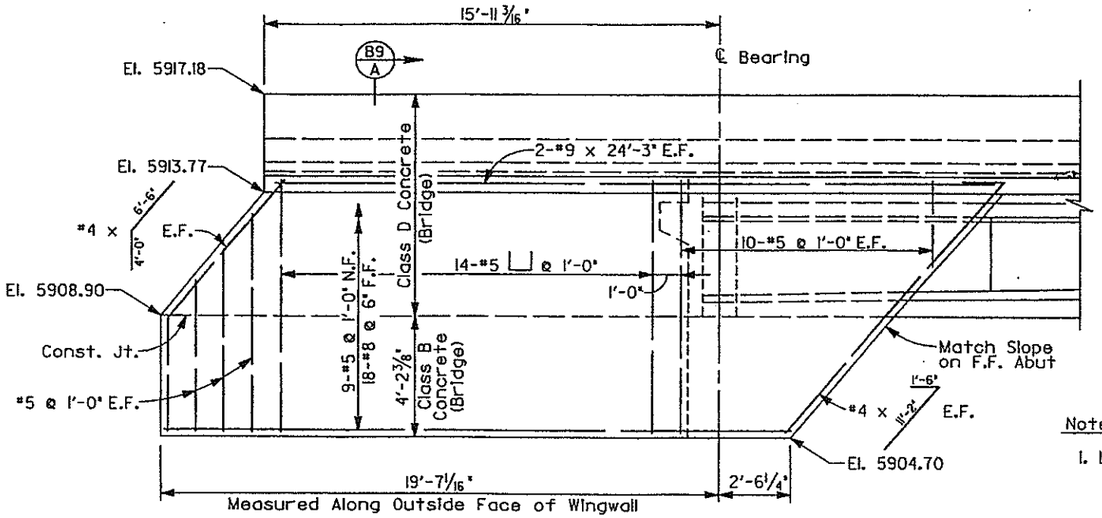

ELEVATION OF EAST WINGWALL @ ABUTMENT #4

Notes:

1. Layout Is Based On Layout Of Existing Ramp A Bridge, Structure F-17-IE, Federal Aid Project I-25-2(153). Contractor To Verify Existing Structure Geometry Prior To Beginning Of Construction Of Bridge Widening.
2. Vertical Geometry Is Based On E-470 Survey Of Existing Ramp A Bridge. Contractor To Verify Prior To Beginning Of Construction.

DESIGNED BY	INITIAL	DATE
CHECKED BY	D.M.	3/90
QUANTITIES BY	D.M.	3/90
CHECKED BY	C.R.	3/90
DETAILED BY	R.B.	3/90

E-470
Engineer 470 Partnership

DIVISION OF HIGHWAYS

RAMPS A AND F OVER SW RAMP BRIDGE WIDENING

WING WALL DETAILS

Designer	D. McDaniel	Structure Numbers	F-17-IE
Detailer	R. Bretz		
Drawing Number	89 of 23 Drawings		

Revision Dates (Preliminary Stage Only)

OSA2:[40,144]AFAD4.90J

STATE OF COLORADO
STATE DEPARTMENT OF HIGHWAYS
DIVISION OF HIGHWAYS
C.D.O.H. FORM NO. 1261
REV. FEB. 1984

AS CONSTRUCTED					
NO REVISIONS ☐	REVISED ☐	VOID ☐			
FED. ROAD REGION	DIVISION	PROJ. NO.	SHEET NO.	SHEET TOTAL	
VIII	Colorado	IA06/18Ø2	41		

REVISIONS			

	INITIAL	DATE
DESIGNED BY	D.M.	3/90
CHECKED BY	C.R.	3/90
DETAILED BY	R.B.	3/90
CHECKED BY	C.R.	3/90
QUANTITIES BY	D.M.	3/90
CHECKED BY	D.M.	3/90

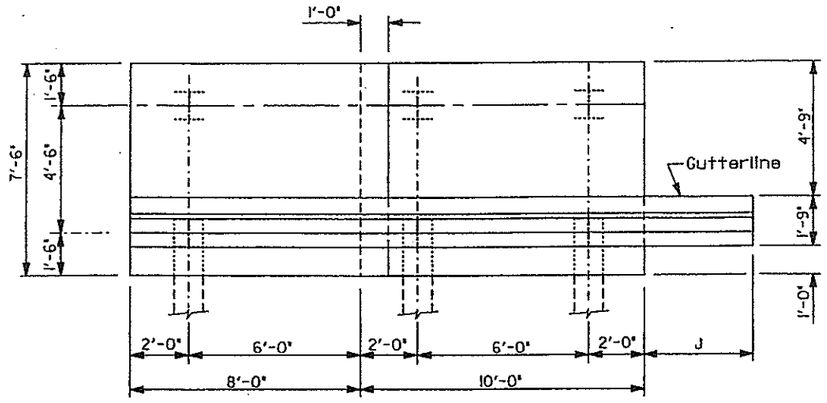

PLAN

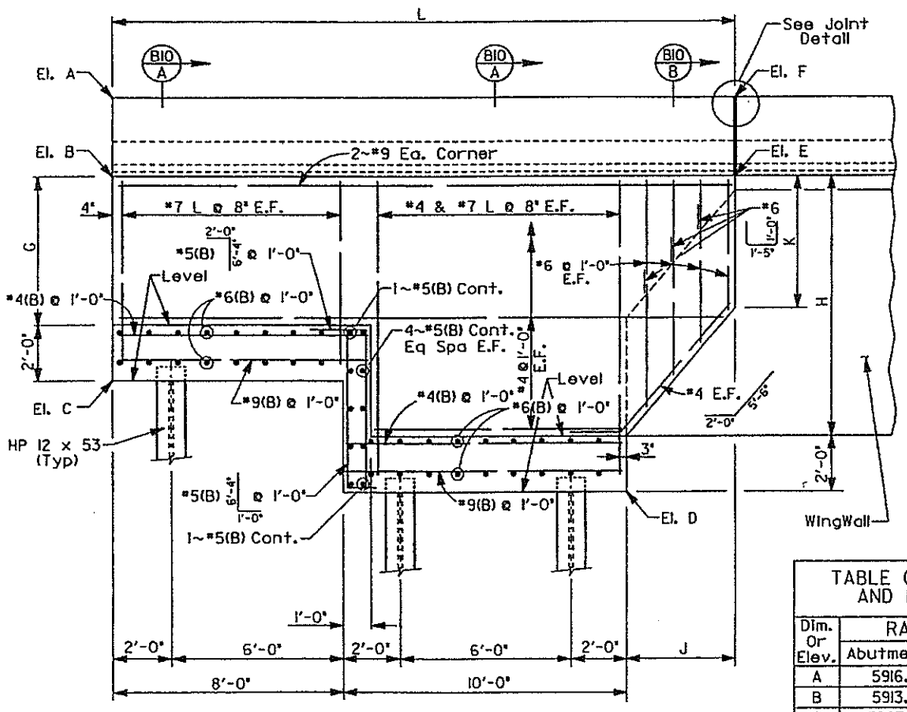

ELEVATION

Note:

1. Vertical Geometry Is Based On E-470 Survey Of Existing Ramp A Bridge. Contractor To Verify Prior To Beginning Of Construction.
2. For Piling Layout, See Dwg. B5.

TABLE OF DIMENSIONS AND ELEVATIONS

Dim. Or Elev.	RAMPS A AND F	
	Abutment #1	Abutment #4
A	5916.82	5917.34
B	5913.99	5914.51
C	5907.50	5907.57
D	5902.68	5902.70
E	5914.10	5914.35
F	5916.93	5917.18
G	4'-5 7/8"	4'-11 1/4"
H	9'-5"	9'-7 13/16"
J	3'-2 15/16"	3'-7 7/8"
K	4'-7 3/16"	4'-9 3/8"
L	21'-2 15/16"	21'-7 7/8"

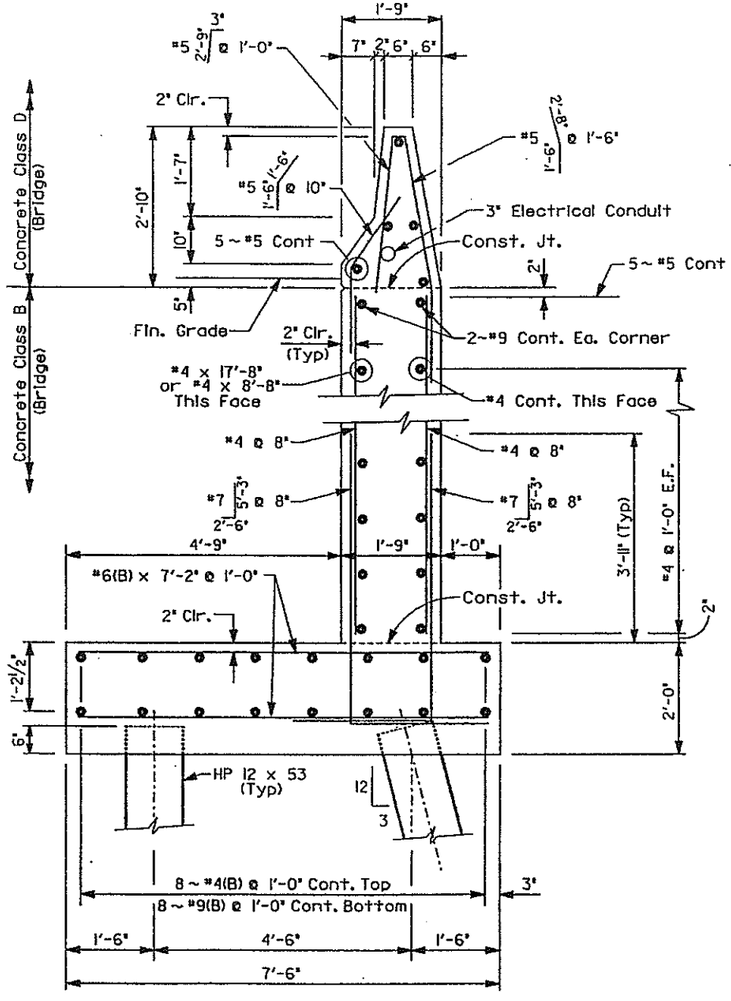

SECTION BIO A

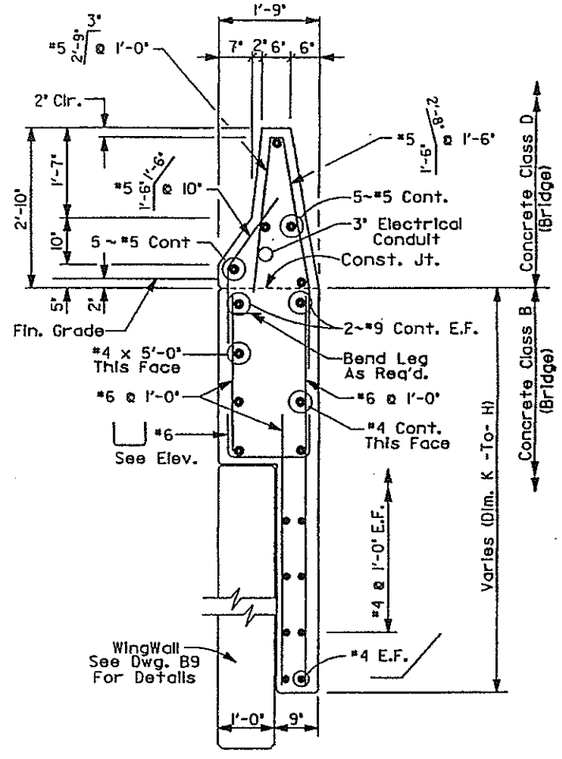

SECTION BIO B

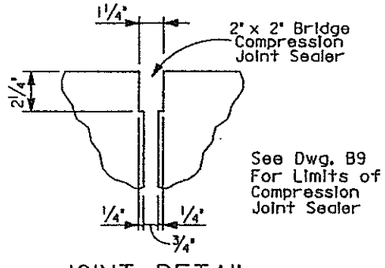

JOINT DETAIL

E-470
Engineer 470 Partnership

DIVISION OF HIGHWAYS

RAMPS A AND F OVER SW RAMP
BRIDGE WIDENING

RETAINING WALL AND
BRIDGE RAIL TYPE 4 (470)

Designer	D. McDaniel	Structure Numbers	F-17-IE
Detailer	R. Bretz		
Drawing Number	BIO of 23 Drawings		

Revision Dates (Preliminary Stage Only)

QSA2:[40,144]I25RW02.90L

STATE OF COLORADO
STATE DEPARTMENT OF HIGHWAYS
DIVISION OF HIGHWAYS:
D. O. H. FORM NO. 126:
REV. FEB. 1984

AS CONSTRUCTED						
NO REVISIONS ☐	REVISED ☐	VOID ☐				
FED. ROAD REGION	DIVISION	PROJ. NO.	SHEET NO.	SHEET TOTAL		
VIII	Colorado	IA06/IB02	42			

REVISIONS			
A-1	4-2-90	REVISED REINF.	D.K.M.

	DATE	CHECKED BY
INITIAL	C.R.	3/90
DESIGNED BY	D.M.	3/90
CHECKED BY	C.R.	3/90
DETAILED BY	D.M.	3/90
QUANTITIES BY	R.B.	3/90
CHECKED BY		

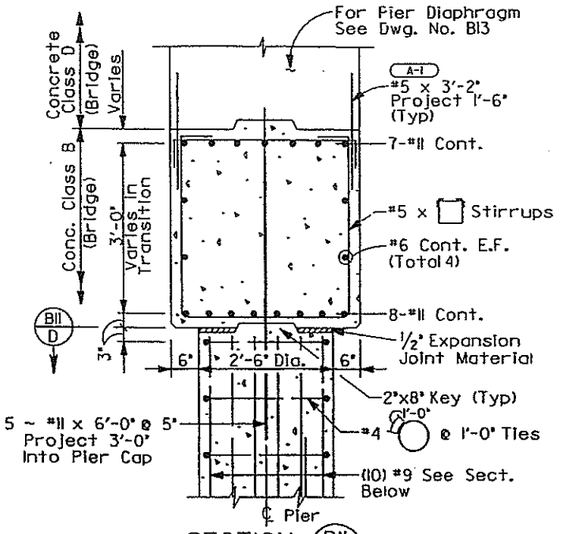

SECTION B11 A
Pier Cap

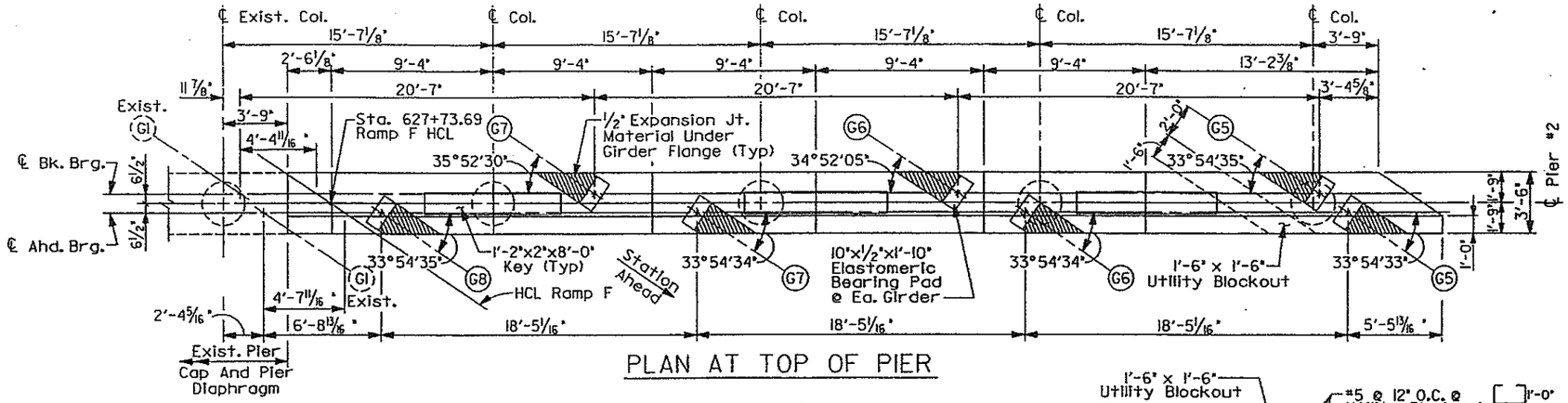

PLAN AT TOP OF PIER

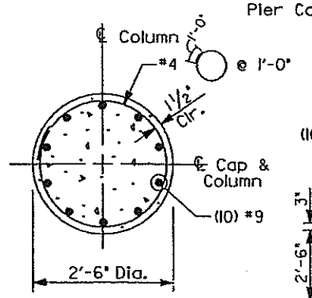

SECTION B11 B
Typical Column

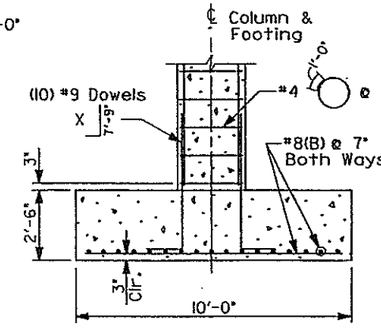

SECTION B11 C

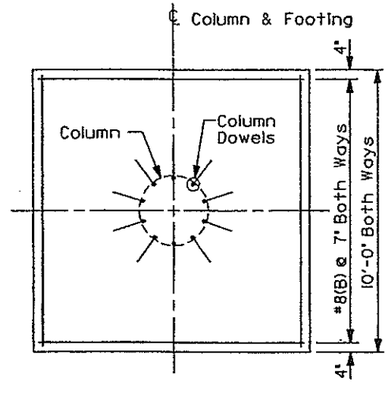

TYPICAL FOOTING PLAN

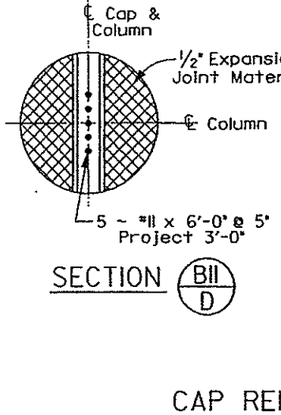

SECTION B11 D

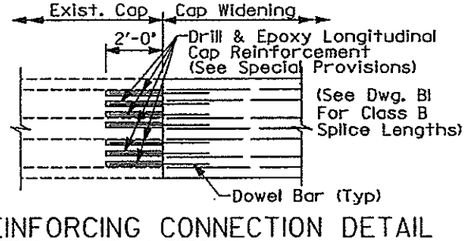

CAP REINFORCING CONNECTION DETAIL

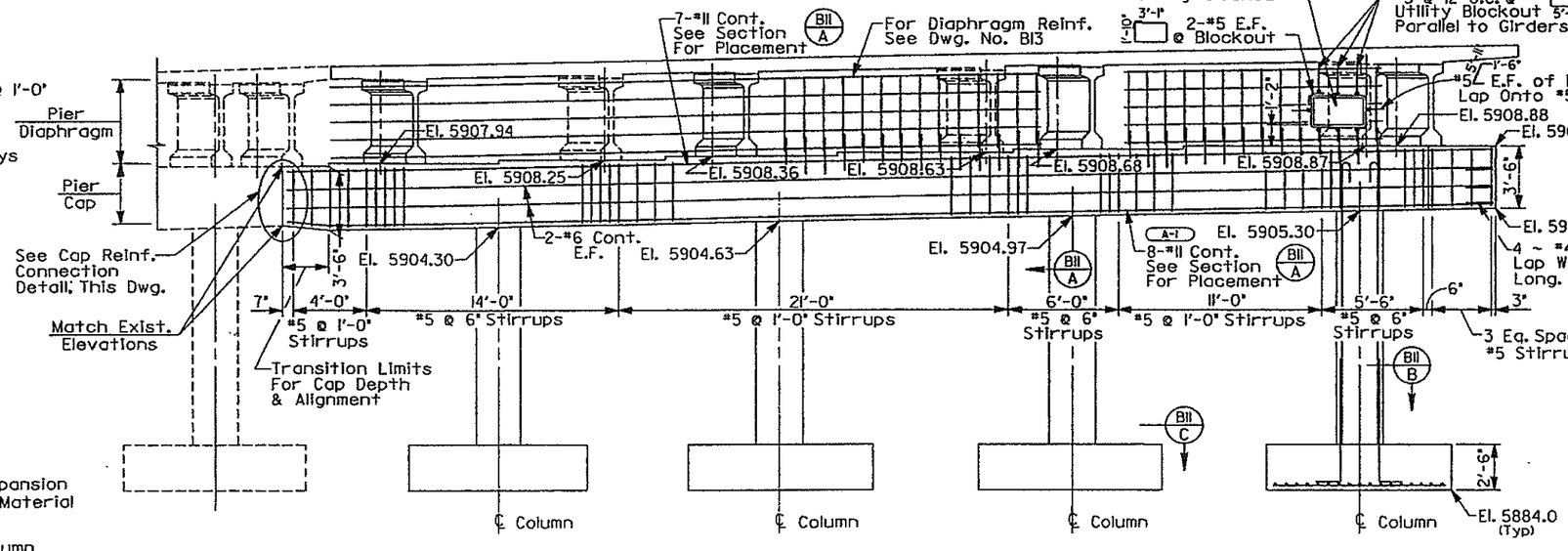

SECTION
Looking Back-Station Along HCL Ramp F

Notes:

1. At Limits of Existing Structure Removal, Saw Cut 1" Into Existing Exposed Concrete Surfaces Prior To Removal.
2. Layout Is Based On Layout Of Existing Ramp A Bridge, Structure F-17-IE, Federal Aid Project I-25-2(153). Contractor To Verify Existing Structure Geometry Prior To Beginning Of Construction Of Bridge Widening.
3. Vertical Geometry Is Based On E-470 Survey Of Existing Ramp A Bridge. Contractor To Verify Prior To Beginning Of Construction.

E-470
Engineer 470 Partnership

DIVISION OF HIGHWAYS

RAMPS A AND F OVER SW RAMP BRIDGE WIDENING

PIER #2

Designer	C. Roth	Structure Numbers	F-17-IE
Detailer	R. Bretz		
Drawing Number	B11	of 23 Drawings	

Revision Dates (Preliminary Stage Only)

QSA2:E40,I443AFPD1.90M

TATE OF COLORADO
TATE DEPARTMENT OF HIGHWAYS
IVISION OF HIGHWAYS:
. O. H. FORM NO. 126:
EV. FEB. 1984

AS CONSTRUCTED									
NO REVISIONS ☐	REVISED ☐	VOID ☐							

FED. ROAD REGION	DIVISION	PROJ. NO.	SHEET NO.	SHEET TOTAL
VIII	Colorado	IA06/IB02	43	

9

REVISIONS			
A-1	4-2-90	REVISED REINF.	D.K.M.

INITIAL	DATE	CHECKED BY
DESIGNED BY	C.R. 3/90	C.R. 3/90
CHECKED BY	D.M. 3/90	D.M. 3/90
DETAILED BY	R.B. 3/90	CHECKED BY

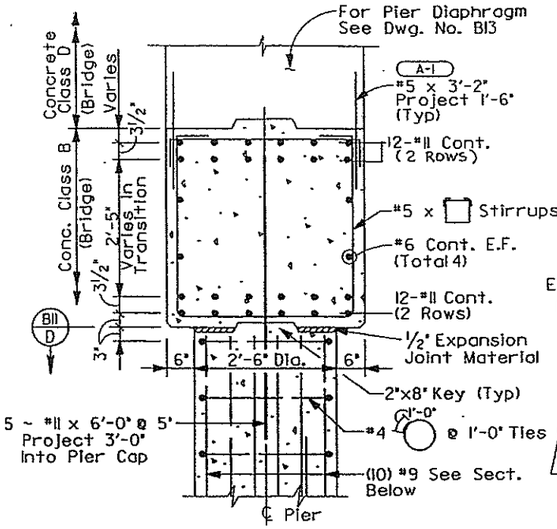

SECTION — Pier Cap — BI2 A

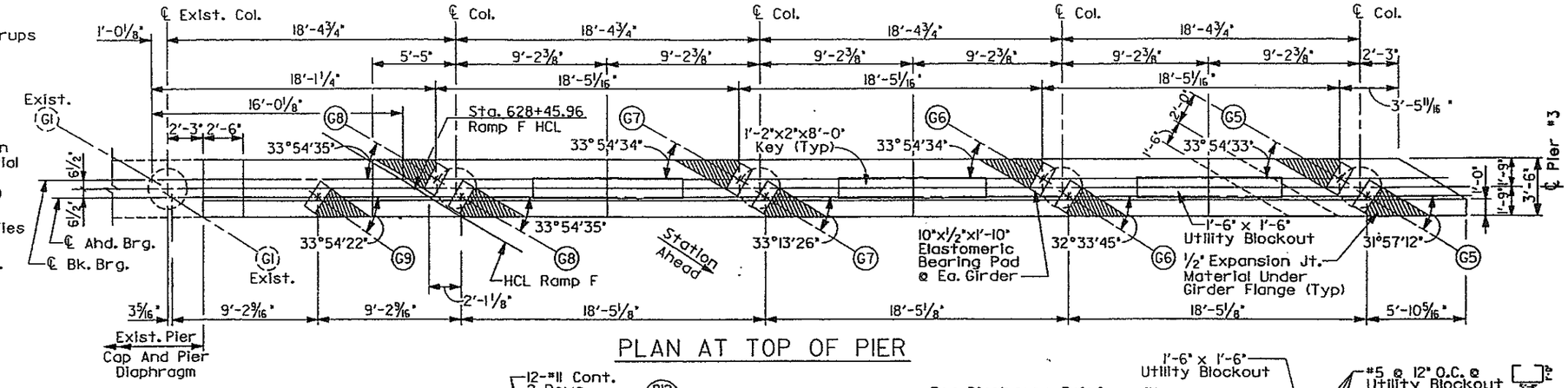

PLAN AT TOP OF PIER

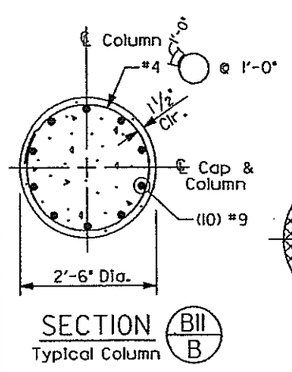

SECTION — Typical Column — BII B

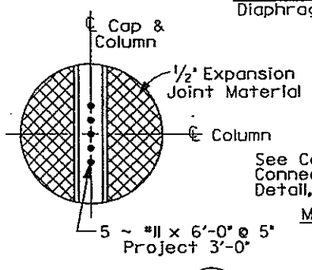

SECTION — BII D

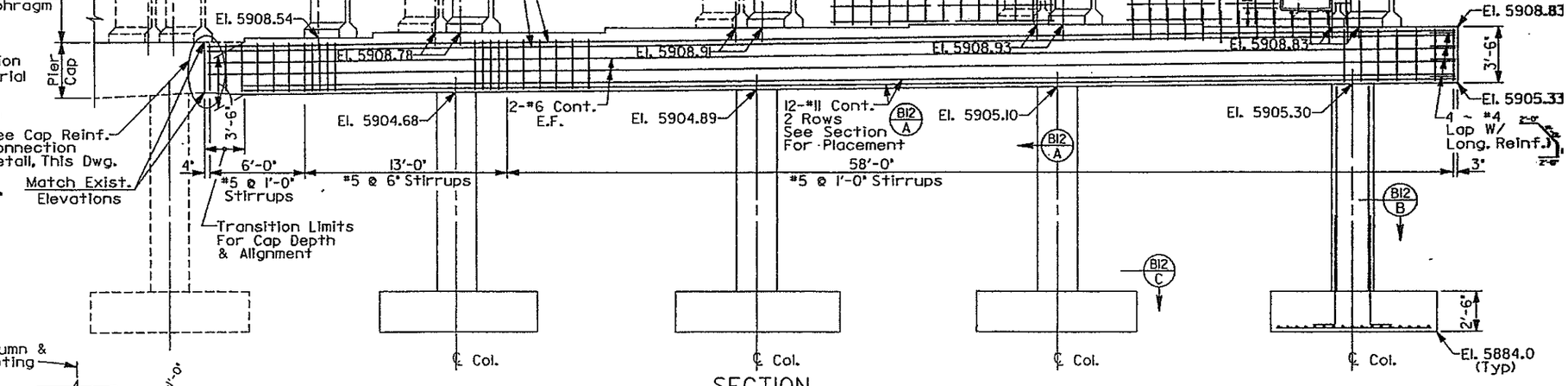

SECTION — Looking Back-Station Along HCL Ramp F

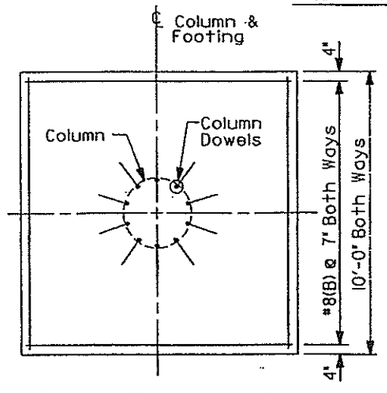

TYPICAL FOOTING PLAN

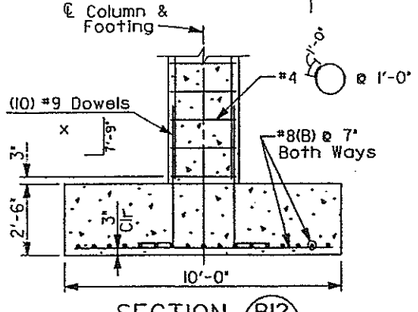

SECTION — BI2 C

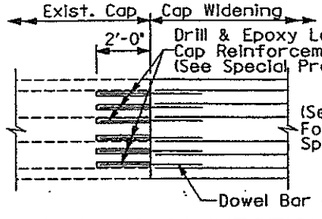

CAP REINFORCING CONNECTION DETAIL

Notes:

1. At Limits of Existing Structure Removal, Saw Cut 1" Into Existing Exposed Concrete Surfaces Prior To Removal.
2. Layout Is Based On Layout Of Existing Ramp A Bridge, Structure F-17-IE, Federal Aid Project I-25-2(153). Contractor To Verify Existing Structure Geometry Prior To Beginning Of Construction Of Bridge Widening.
3. Vertical Geometry Is Based On E-470 Survey Of Existing Ramp A Bridge. Contractor To Verify Prior To Beginning Of Construction.

E-470
Engineer 470 Partnership

DIVISION OF HIGHWAYS

RAMPS A AND F OVER SW RAMP BRIDGE WIDENING

PIER #3

Designer C. Roth	Structure Numbers	F-17-IE	
Detailer R. Bretz			
Drawing Number BI2 of 23 Drawings			

Revision Dates	(Preliminary Stage Only)

OSA2:[40,144]AFPD2.90M

STATE OF COLORADO
STATE DEPARTMENT OF HIGHWAYS
DIVISION OF HIGHWAYS:
D. O. H. FORM NO. 126:
REV. FEB. 1984

AS CONSTRUCTED						
NO REVISIONS ☐	REVISED ☐	VOID ☐				
FED. ROAD REGION	DIVISION	PROJ. NO.	SHEET NO.	SHEET TOTAL		
VIII	Colorado	IA06/IB02	44			

	REVISIONS		
A-1	4-2-90	REVISED REINF.	D.K.M.

	INITIAL	DATE	CHECKED BY	DATE
DESIGNED BY	J.S.	3/90	J.S.	3/90
CHECKED BY	D.M.	3/90	D.M.	3/90
DETAILED BY	R.B.	3/90	C.R.	3/90

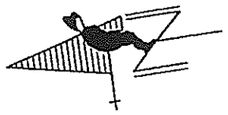

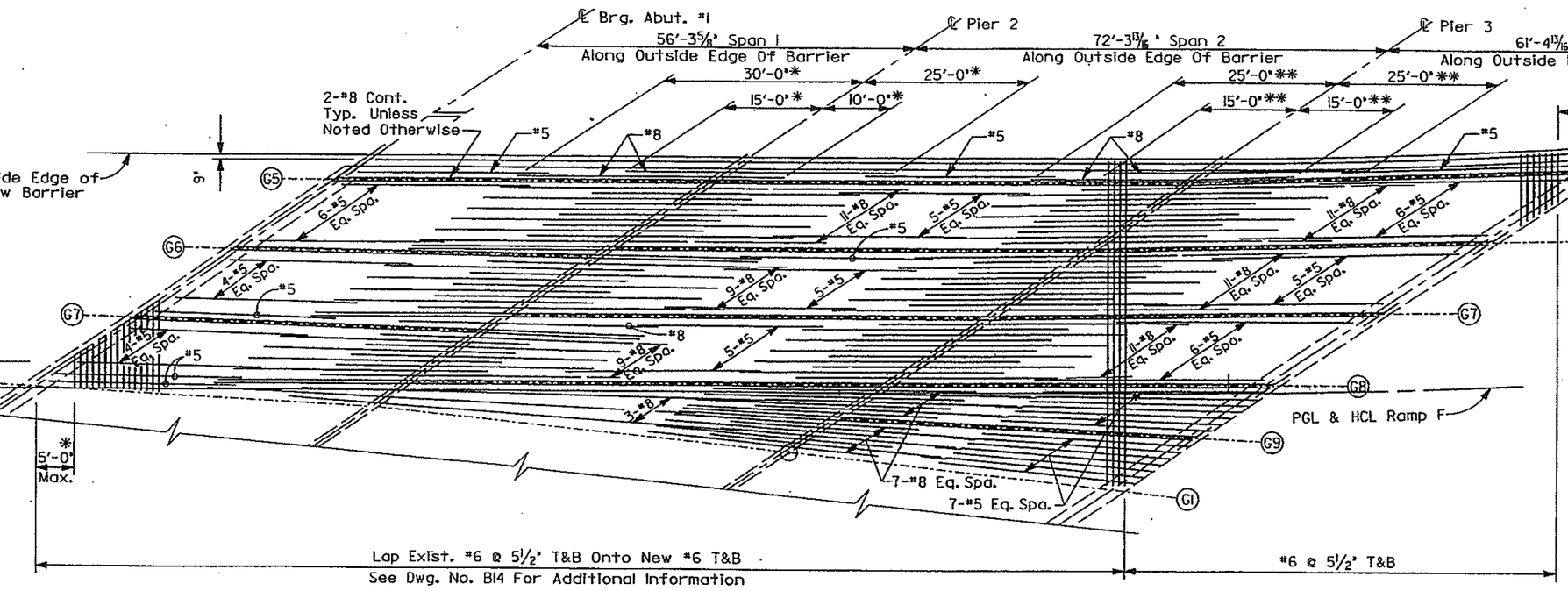

DECK PLAN

(Bottom Longitudinal Reinf. Not Shown For Clarity. For Details, See Dwg. BI4)

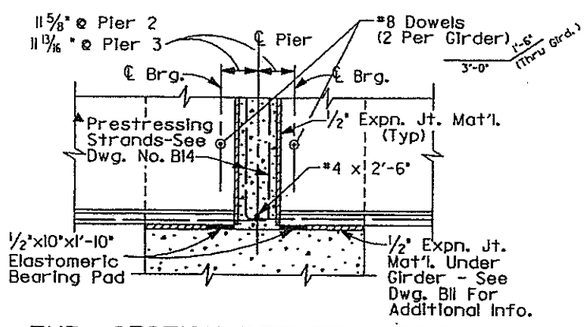

TYP. SECTION BETWEEN GIRDERS

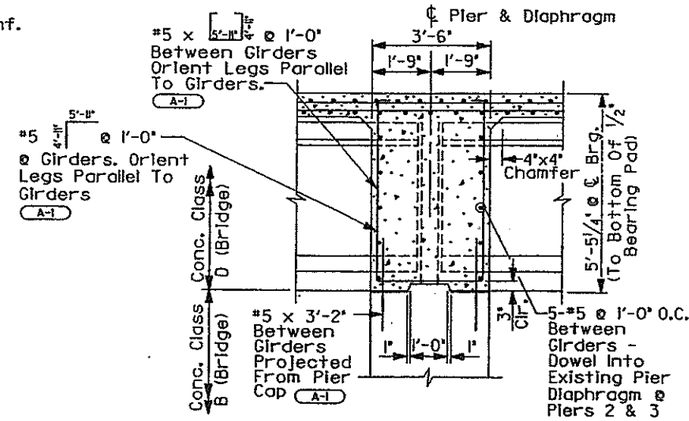

PIER DIAPHRAGM DETAIL

Notes:

*Dimension Measured Parallel To HCL Ramp F At ℄ Pier 2

**Dimension Measured Parallel To HCL Ramp F At ℄ Pier 3

E-470
Engineer 470 Partnership

DIVISION OF HIGHWAYS

RAMPS A AND F OVER SW RAMP BRIDGE WIDENING

SUPERSTRUCTURE DETAILS #1

Designer	J. Showers	Structure Numbers	F-17-IE
Detailer	R. Bretz		
Drawing Number	BI3 of 23 Drawings		

Revision Dates (Preliminary Stage Only)

QSA2:[40,144]AFSSDI.90N

STATE OF COLORADO
STATE DEPARTMENT OF HIGHWAYS
DIVISION OF HIGHWAYS:
STD. PLAN FORM NO. 126:
REV. FEB. 1984

AS CONSTRUCTED			
NO REVISIONS ☐	REVISED ☐	VOID ☐	

FED. ROAD REGION	DIVISION	PROJ. NO.	SHEET NO.	SHEET TOTAL
VIII	Colorado	IA06/IB42	45	

REVISIONS		

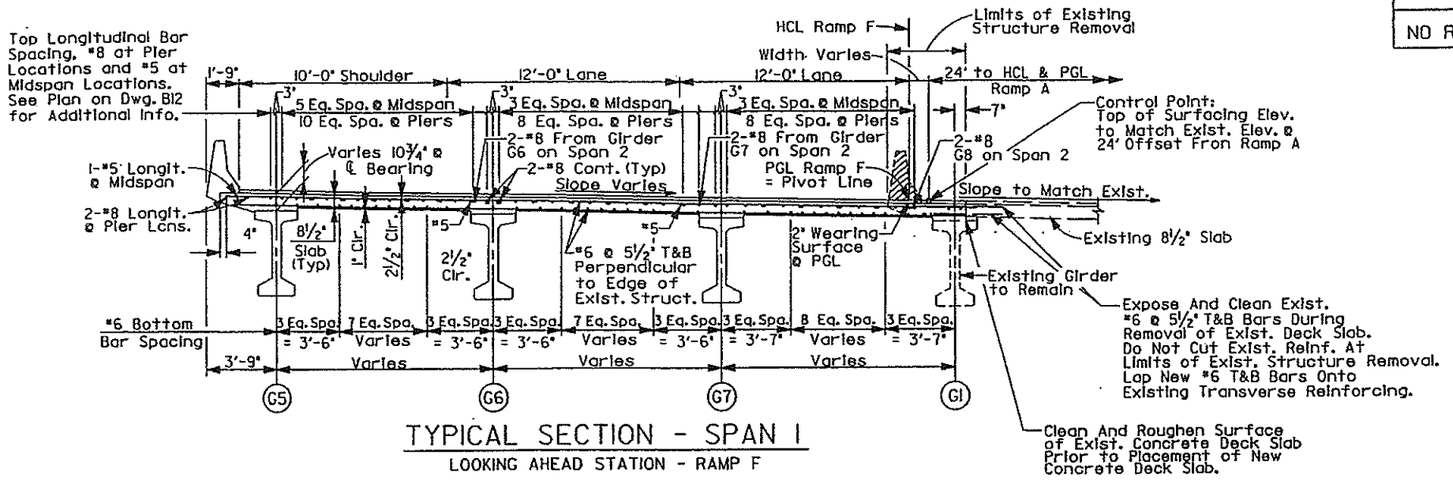

TYPICAL SECTION - SPAN 1

LOOKING AHEAD STATION - RAMP F

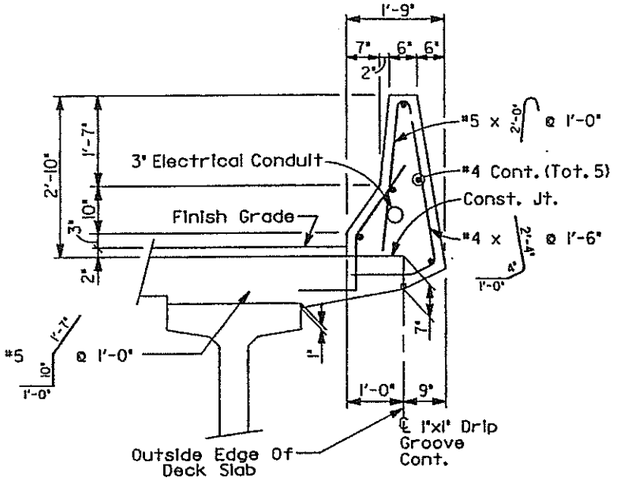

SECTION THRU BRIDGE RAIL

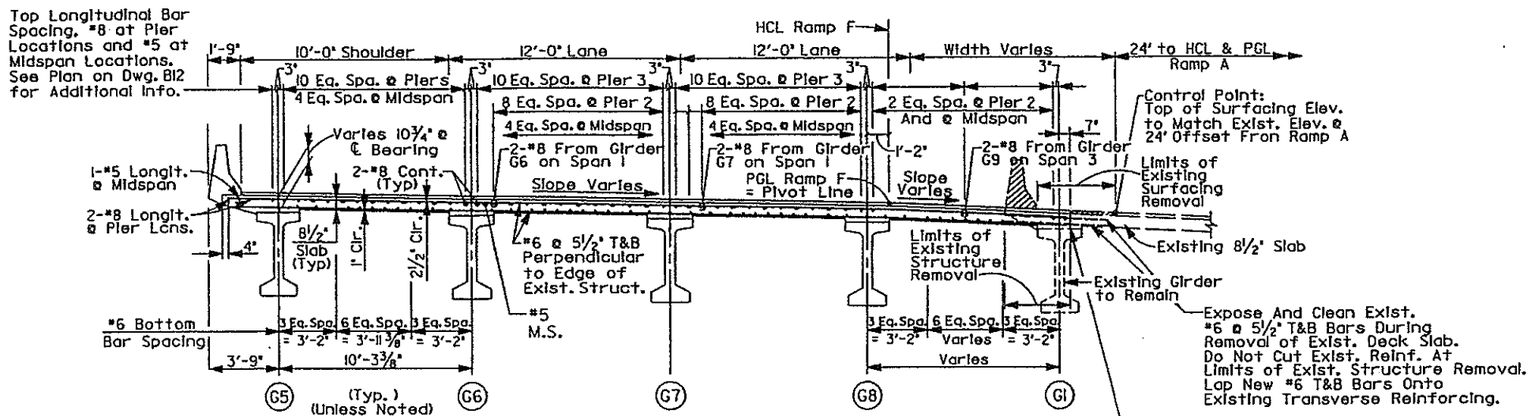

TYPICAL SECTION - SPAN 2

LOOKING AHEAD STATION - RAMP F

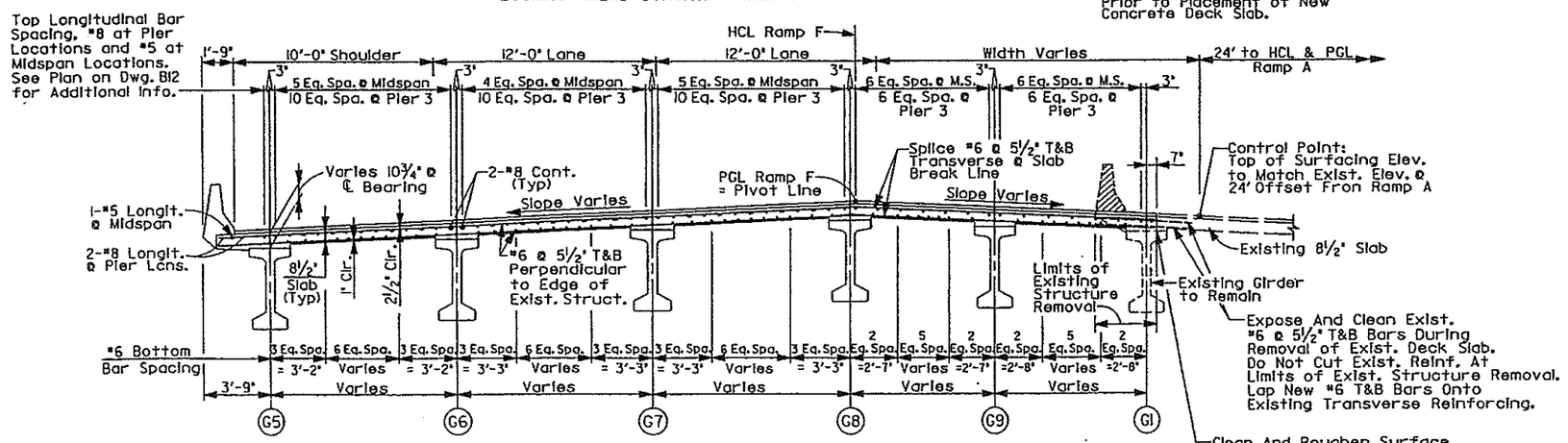

TYPICAL SECTION - SPAN 3

LOOKING AHEAD STATION - RAMP F

Notes:

1. At Limits of Existing Structure Removal, Saw Cut 1" Into Existing Exposed Concrete Surfaces Prior To Removal.
2. Layout Is Based On Layout Of Existing Ramp A Bridge, Structure F-17-IE, Federal Aid Project I-25-2(153). Contractor To Verify Existing Structure Geometry Prior To Beginning Of Construction Of Bridge Widening.
3. Vertical Geometry Is Based On E-470 Survey Of Existing Ramp A Bridge. Contractor To Verify Prior To Beginning Of Construction.

	DATE	CHECKED BY
INITIAL	3/90	J.S.
DESIGNED BY	3/90	D.M.
CHECKED BY	3/90	QUANTITIES BY
DETAILED BY	3/90	D.M.
		CHECKED BY
		C.R.

E-470
Engineer 470 Partnership

DIVISION OF HIGHWAYS

RAMPS A AND F OVER SW RAMP
BRIDGE WIDENING

SUPERSTRUCTURE
DETAILS #2

Designer	J. Showers	Structure Numbers	F-17-IE
Detailer	R. Bretz		
Drawing Number	B14 of 23 Drawings		

Revision Dates (Preliminary Stage Only)								

QSA2:[40,144]AFSSD2.90N

STATE OF COLORADO
STATE DEPARTMENT OF HIGHWAYS
DIVISION OF HIGHWAYS
S. H. FORM NO. 1266
REV. FEB. 1984

STANDARD EB-618-54

AS CONSTRUCTED					
NO REVISIONS ☐	REVISED ☐	VOID ☐			

FED. ROAD REGION	DIVISION	PROJ. NO.	SHEET NO.	SHEETS TOTAL
VIII	Colorado	IA06/1B02	46	

REVISIONS		

	INITIAL	DATE	CHECKED BY
DESIGNED BY	JLS	6-89	JLS
CHECKED BY	TJC	6-89	TJC
DETAILED BY	DKR	6-89	DKR
	MDA	6-89	MDA
			QUANTITIES BY
			CHECKED BY

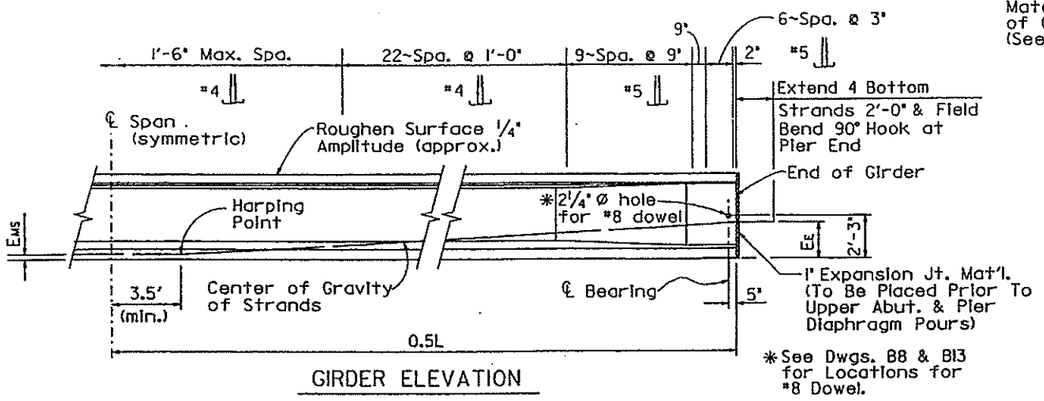

GIRDER ELEVATION

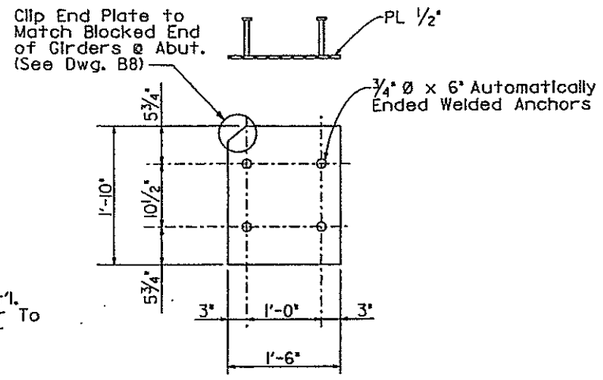

END PLATE DETAIL
Galvanize after Fabrication.

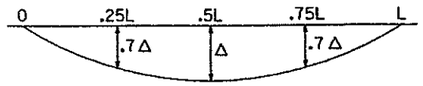

DEAD LOAD DEFLECTION DIAGRAM

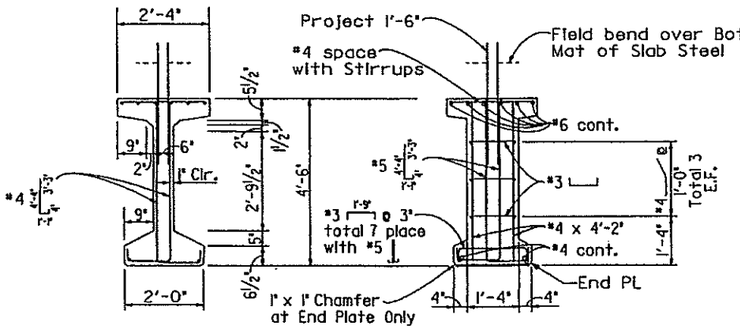

THROUGH MID SPAN THROUGH END PLATE

TYPICAL GIRDER SECTIONS

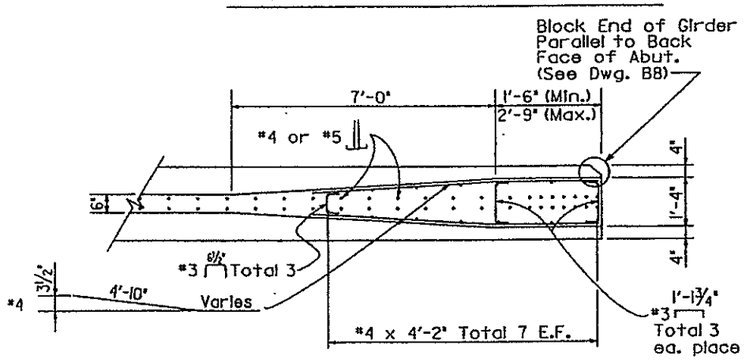

SECTION THRU END BLOCK

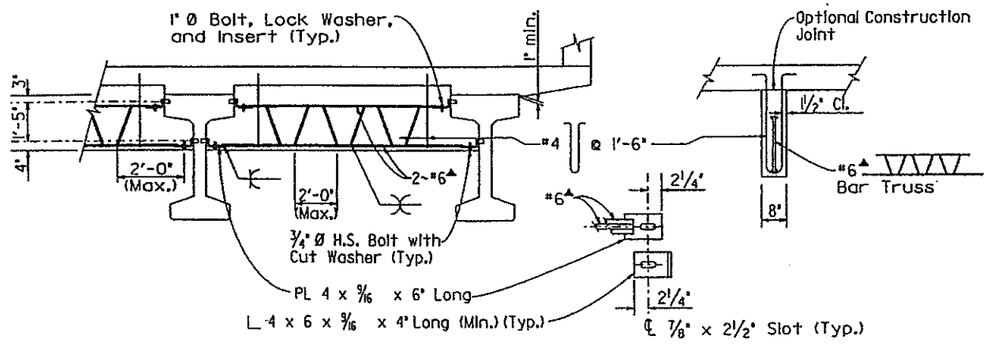

INTERMEDIATE DIAPHRAGM DETAILS
For Location of Diaphragm, see Construction Layout

▲#6 bar shall be ASTM A706 or 3/4" Ø A36

GIRDER SCHEDULE

Span No.	Girder No.	L (Feet)	As (Square Inch)	E_{MS} (Inch)	E_E (Inch)	F_I (KIPS)	F_F (KIPS)	Concrete Strength f'_{ci} (PSI)	Concrete Strength f'_c (PSI)	Δ (Inch)	Expected Camber (Inch)
1	5	56.17	2.75	2.86	15.50	558	448	4,500	5,000	0.243	0.908
1	6	54.83	2.75	2.86	15.50	558	454	4,500	5,000	0.301	0.877
1	7	53.51	2.75	2.86	15.50	558	447	4,500	5,000	0.277	0.847
2	5	71.16	3.67	2.91	15.79	744	579	4,500	5,000	0.571	1.671
2	6	71.16	3.67	2.91	15.79	744	574	4,500	5,000	0.626	1.671
2	7	71.16	3.67	2.91	15.79	744	574	4,500	5,000	0.626	1.671
2	8	71.16	3.67	2.91	15.79	744	576	4,500	5,000	0.741	1.671
3	5	60.62	2.75	2.86	15.50	558	452	4,500	5,000	0.311	1.004
3	6	59.57	2.75	2.86	15.50	558	452	4,500	5,000	0.375	0.983
3	7	58.54	2.75	2.86	15.50	558	450	4,500	5,000	0.354	0.961
3	8	57.50	2.14	2.86	19.10	434	365	4,500	5,000	0.285	0.637
3	9	53.48	2.14	2.86	19.10	434	360	4,500	5,000	0.179	0.606

NOTES

All work necessary to fabricate and install the integral parts of the girder (including #6 Bar Truss and elastomeric leveling and bearing pads) as shown on the plans shall be included in the bid price for Item No. 618, Prestressed Concrete Unit.

When approved by the Engineer, a minimum of tack welding will be permitted on ASTM A706 uncoated reinforcing steel.

Reinforcing projecting from the top of the girder and reinforcing within eight feet of an expansion device in the bridge deck shall be epoxy coated. Damaged coating on girder reinforcing need not be repaired.

At girder ends not embedded in concrete diaphragms, cut strands off 1" below the surface of the concrete and finish with an approved epoxy grout. At girder ends embedded in concrete diaphragms, cut strands to project 3". Do not make cosmetic repairs (damage less than 1½" deep) to the parts of the girders embedded in concrete.

Use ½" Ø fs=270 KSI low relaxation strands meeting the requirements of ASTM A416 Grade 270. Alternate strands are ½" Ø stress relieved strands meeting the requirements of ASTM A416 Grade 270. If stress relieved strands are used, the jacking force and initial concrete strengths shall be adjusted as appropriate to provide the final force (Ff) shown. The fabricator shall include design calculations with the shop plans.

The minimum distance between groups or individual strands shall be 1¾" (measured between centers of adjacent strands). The minimum cover for prestressing steel is 1½".

A minimum of two harping points shall be used per girder.

As Is the minimum area of the prestressing steel.

fs Is the ultimate strength of the prestressing steel.

Fi Is the jacking force per girder including all losses.

Ff Is the final force per girder after all losses

f'ci Is the required concrete strength at release of prestress force.

f'c Is the required concrete strength at 28 days of age.

Δ Is the deflection at centerline of span due to cast-in-place slab, diaphragms, asphalt, curbs, rails and walks.

Concrete shall be Class S.

Entrained air is not required for girder concrete.

End Blocks shall be used on all girders unless otherwise noted.

Use ½" chamfer on all corners, except as noted.

Expected camber is projected to 90 days girder age. If girders, deck, forms, and reinforcing will not be placed before that girder age, weights, temporary tensioning, or other means approved by the Engineer shall be used to limit camber growth. Prior to deck pour, measure and report E-470 Project Engineer to cambers exceeding the expected camber by more than 1½" because the anticipated haunch may not exist and the girder flange may interfere with the deck reinforcement.

Use and installation of the #6 Bar Truss shall not relieve the Contractor of its full responsibility to construct the work in a manner which provides all necessary rigidity, supports all loads imposed, and provides in the finished structure the lines and grades indicated on the plans.

No girders shall be erected and left unbraced. The #6 Bar Truss shall be connected to the adjacent girders simultaneously with the erection of the girders.

For girders passing over traffic, the #6 Bar Truss shall be connected to the girders prior to the release of the erection equipment.

The Contractor is responsible for determining necessary bracing requirements, and for providing adequate bracing for the specific wind and weather conditions to be encountered for each specific project.

The Contractor shall field verify C.C. bearing distances prior to girder fabrication. See special provisions for additional information.

E-470
Engineer 470 Partnership

DIVISION OF HIGHWAYS

RAMPS A AND F OVER SW RAMP BRIDGE WIDENING

COLORADO G54 GIRDER

Designer	J. Showers	Structure Numbers	F-17-IE
Detailer	R. Bretz		
Drawing Number	B15 of 23 Drawings		

Revision Dates (Preliminary Stage Only)

STANDARD EB-618-54

UDA2:E200,20JY0SG54.90N

ATE OF COLORADO
ATE DEPARTMENT OF HIGHWAYS
/ISION OF HIGHWAYS
D.H. FORM NO. 126
V. FEB. 1984

AS CONSTRUCTED

NO REVISIONS ☐ REVISED ☐ VOID ☐

FED. ROAD REGION	DIVISION	PROJ. NO.	SHEET NO.	SHEE TOTA
VIII	Colorado	IA06/IB42	47	

REVISIONS		

	INITIAL	DATE	
DESIGNED BY	J.S.	3/90	J.S. 3/90
CHECKED BY	D.M.	3/90	D.M. 3/90
DETAILED BY	R.B.	3/90	C.R. 3/90
	CHECKED BY		CHECKED BY
	QUANTITIES BY		

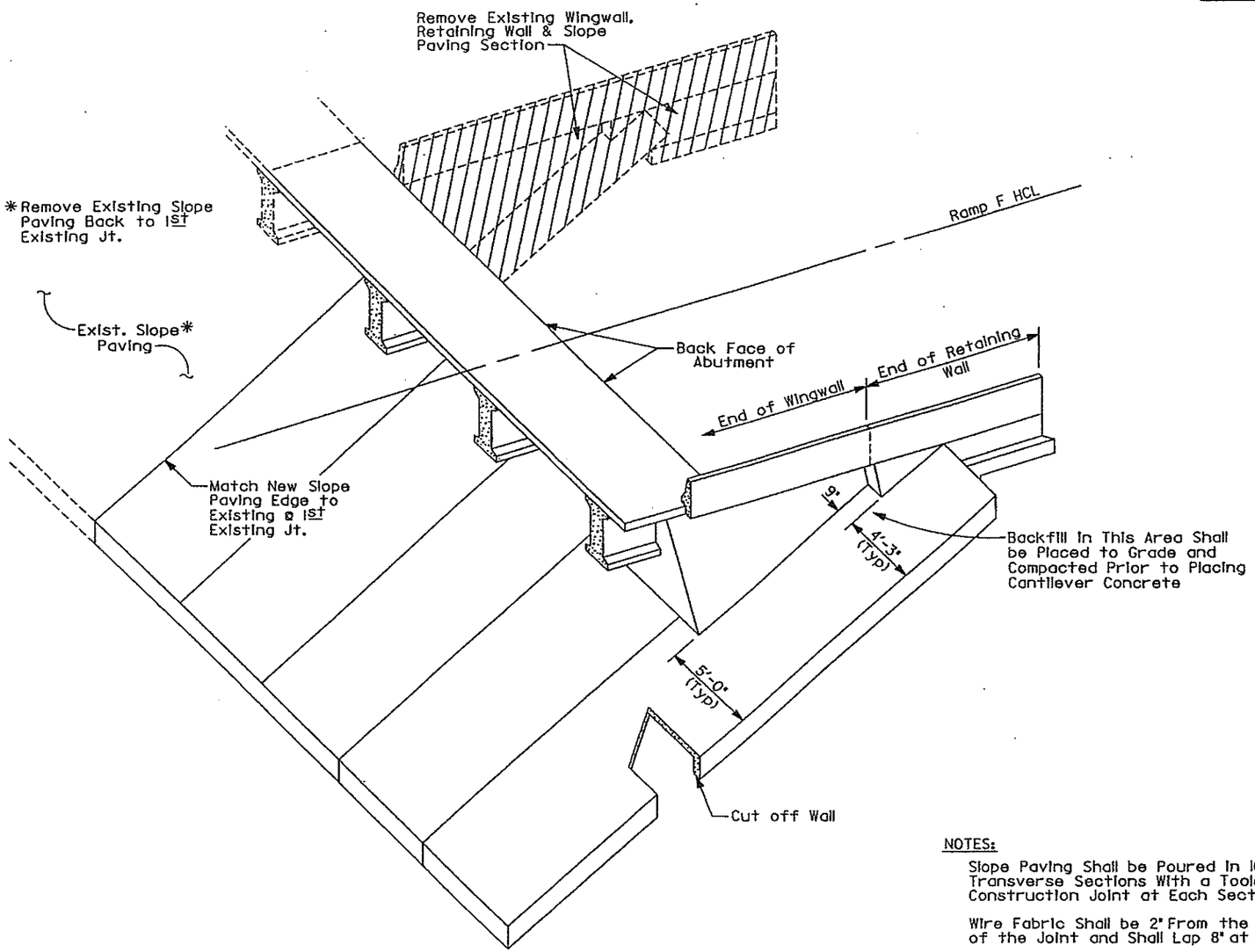

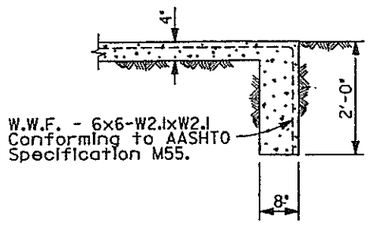

SECTION THRU CUT-OFF WALL

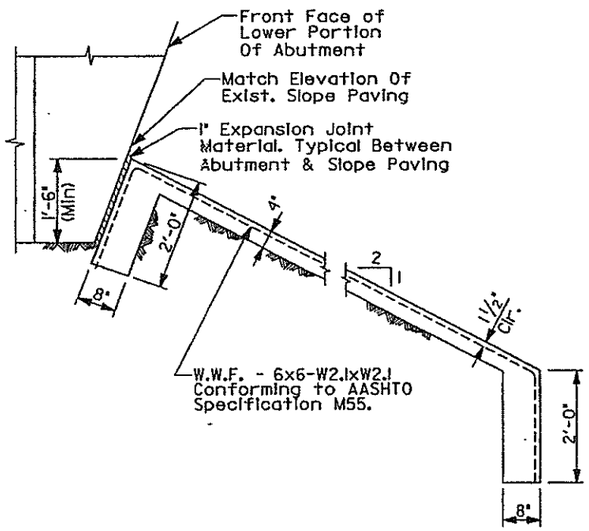

SECTION THRU SLOPE PAVING

NOTES:

Slope Paving Shall be Poured In 10 Ft. Transverse Sections With a Tooled Construction Joint at Each Section.

Wire Fabric Shall be 2" From the End of the Joint and Shall Lap 8" at Splices.

Where Slope Paving Butts Against Structural Concrete, Separate with 1" Exp. Jt. Material.

Expansion Joint Material and Welded Wire Fabric Shall Not be Paid For Separately, but Shall be Included In Item 507.

The Surface of Finished Slope Paving Shall Receive A Class 3, Float Finish of Uniform Appearence Free of Float Marks and Smoothly Troweled Construction Joints.

Structural Excavation For Slope and Ditch Paving Shall Be Limited To The Actual Volume Occupied By The Slope Paving Concrete.

See General Layout For Limits of Slope Paving

DIVISION OF HIGHWAYS

RAMPS A AND F OVER SW RAMP BRIDGE WIDENING

SLOPE PAVING DETAILS

E-470
Engineer 470 Partnership

Designer	J. Showers	Structure Numbers	F-17-IE
Detailer	R. Bretz		
Drawing Number	B16 of 23 Drawings		

Revision Dates (Preliminary Stage Only)

OSA2:[40,144]AFSPD1.90N

STATE OF COLORADO
STATE DEPARTMENT OF HIGHWAYS
DIVISION OF HIGHWAYS
C. H. FORM NO. 126
REV. FEB. 1984

AS CONSTRUCTED
NO REVISIONS ☐ REVISED ☐ VOID ☐

FED. ROAD REGION	DIVISION	PROJ. NO.	SHEET NO.	SHEET TOTAL
VIII	Colorado	IA06/IB42	48	

REVISIONS		

	DATE	INITIAL
DESIGNED BY	8-89	J.L.S.
DETAILED BY	8-89	L.R.C.
CHECKED BY	8-89	L.R.C.
QUANTITIES BY	8-89	W.E.D.
CHECKED BY	9-89	W.D.A.

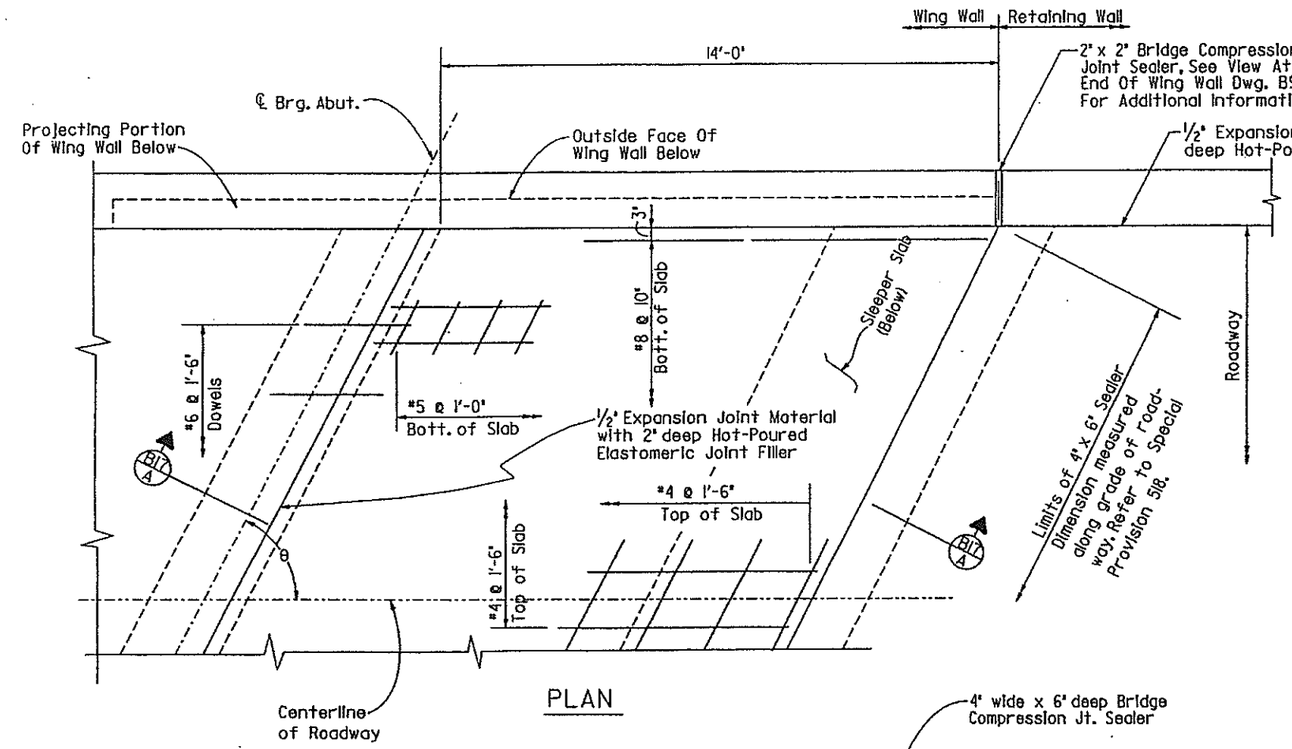

PLAN

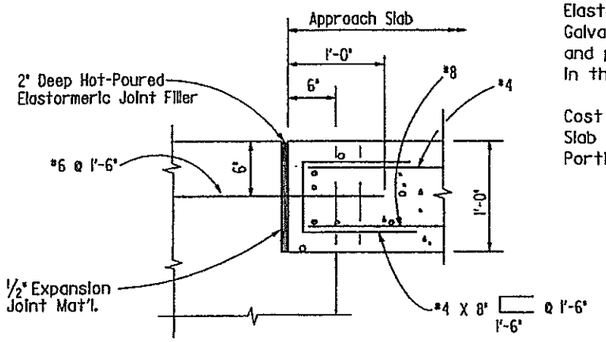

DETAIL "B"

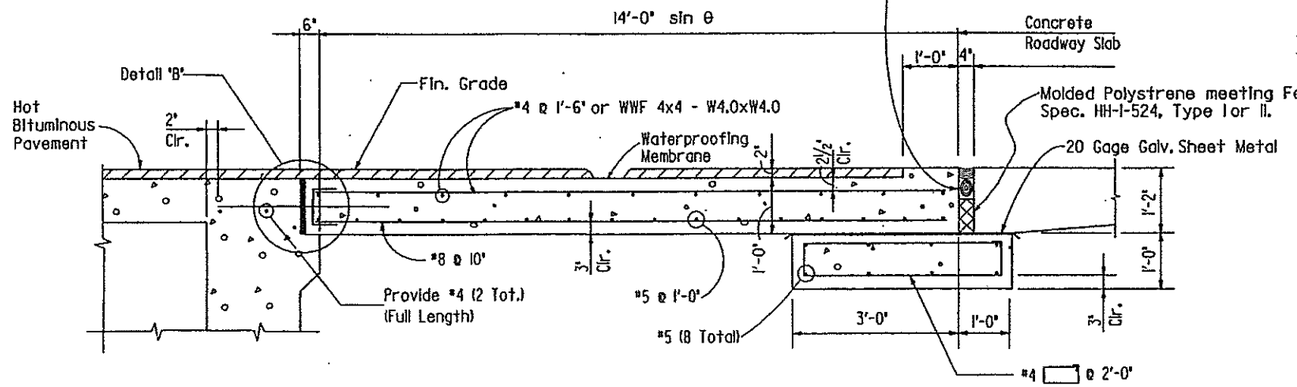

SECTION B17 A
With Concrete Roadway Slab

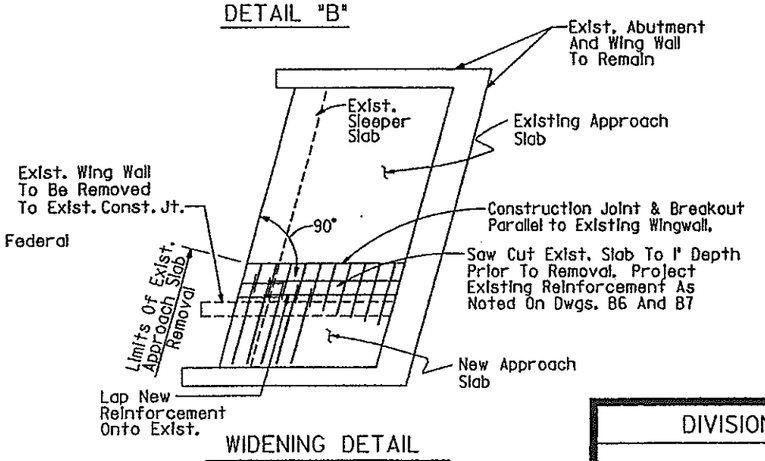

WIDENING DETAIL

NOTES:

Concrete for Approach Slab shall be Class D (Bridge).

½" Expansion Joint Material shall meet AASHTO Spec. M-213.

Hot-Poured Elastomeric Joint Filler shall meet AASHTO M-282.

The ½" Expansion Joint Material, Hot-Poured Elastomeric Joint Filler, Tack Coat and 20 gage Galvanized Sheet Metal will not be measured and paid for separately, but shall be included in the work.

Cost of Removing Portions of Existing Approach Slab shall be included in Item 202, 'Removal of Portions of Present Structure'.

DIVISION OF HIGHWAYS

RAMPS A AND F OVER SW RAMP BRIDGE WIDENING

APPROACH SLAB DETAILS

E-470
Engineer 470 Partnership

Designer	J. Showers	Structure Numbers	F-17-IE
Detailer	R. Bretz		
Drawing Number	B17 of 23 Drawings		

Revision Dates (Preliminary Stage Only)

STEB-601-IA

OSA2:[40,144]YOSASD2.90W

COLORADO DEPARTMENT OF HIGHWAYS
DIVISION OF HIGHWAYS
STATE HWY. NO. 126

AS CONSTRUCTED

NO REVISIONS ☐ REVISED ☐ VOID ☐

FED. ROAD REGION	DIVISION	PROJ. NO.	SHEET NO.	SHEET TOTAL
VIII	Colorado	IA06/IB42	49	

REVISIONS		

BENT LINE DESCRIPTION OR FRACTIONAL POINT DESIGNATION	STATION	OFFSET	ELEVATION	COORDINATES N	COORDINATES E	LONGITUDINAL LINE LENGTH
Longitudinal Line Control Line F						
Back Face Abut 1	627+14.91	0.0	5912.42	629141.9389	177875.2900	0
℄ Brg Abut 1	627+17.32	0.0	5912.46	629139.5542	177874.9416	2.41
2	627+22.86	0.0	5912.55	629134.0742	177874.1290	7.95
3	627+28.40	0.0	5912.63	629128.5965	177873.3004	13.49
4	627+33.94	0.0	5912.72	629123.1205	177872.4609	19.03
5	627+39.48	0.0	5912.81	629117.6445	177871.6210	24.57
6	627+45.02	0.0	5912.90	629112.1685	177870.7811	30.11
7	627+50.56	0.0	5912.99	629106.6926	177869.9413	35.65
8	627+56.10	0.0	5913.07	629101.2166	177869.1014	41.19
9	627+61.64	0.0	5913.14	629095.7406	177868.2615	46.73
10	627+67.18	0.0	5913.35	629090.2647	177867.4217	52.27
℄ Brg Pier 2 Bk	627+72.72	0.0	5913.30	629084.7887	177866.5818	57.81
℄ Pier 2	627+73.69	0.0	5913.31	629083.8299	177866.4348	58.78
℄ Brg Pier 2 Ah	627+74.66	0.0	5913.33	629082.8711	177866.2877	59.75
2	627+81.69	0.0	5913.42	629075.9224	177865.2220	66.78
3	627+88.73	0.0	5913.52	629068.9637	177864.1547	73.82
4	627+95.76	0.0	5913.61	629062.0150	177863.0890	80.85
5	628+02.79	0.0	5913.70	629055.0662	177862.0232	87.88
6	628+09.82	0.0	5913.79	629048.1175	177860.9575	94.91
7	628+16.86	0.0	5913.88	629041.1589	177859.8902	101.95
8	628+23.89	0.0	5913.97	629034.2101	177858.8245	108.98
9	628+30.92	0.0	5914.04	629027.2614	177857.7587	116.01
10	628+37.96	0.0	5914.11	629020.3027	177856.6915	123.05
℄ Brg Pier 3 Bk	628+44.99	0.0	5914.19	629013.3540	177855.6257	130.08
℄ Pier 3	628+45.96	0.0	5914.20	629012.3952	177855.4787	131.05
℄ Brg Pier 3 Ah	628+46.93	0.0	5914.21	629011.4364	177855.3316	132.02
2	628+52.61	0.0	5914.26	629005.8220	177854.4706	137.70
3	628+58.29	0.0	5914.32	629000.2077	177853.6095	143.38
4	628+63.97	0.0	5914.37	628994.5933	177852.7484	149.06
5	628+69.64	0.0	5914.42	628988.9889	177851.8888	154.73
6	628+75.32	0.0	5914.47	628983.3745	177851.0277	160.41
7	628+81.00	0.0	5914.52	628977.7602	177850.1667	166.09
8	628+86.68	0.0	5914.57	628972.1458	177849.3056	171.77
9	628+92.36	0.0	5914.62	628966.5314	177848.4448	177.45
10	628+98.04	0.0	5914.67	628960.9140	177847.6042	183.13
℄ Brg Abut 4	629+03.71	0.0	5914.72	628955.3017	177846.7976	188.80
Back Face Abut 4	629+06.15	0.0	5914.75	628952.8851	177846.4605	191.24

BENT LINE DESCRIPTION OR FRACTIONAL POINT DESIGNATION	STATION	OFFSET	ELEVATION	COORDINATES N	COORDINATES E	LONGITUDINAL LINE LENGTH
Longitudinal Line - Left Edge of Slab						
Back Face Abut 1	627+67.06	35.00	5914.21	629085.0788	177902.0354	0
℄ Brg Abut 1	627+69.45	35.00	5914.23	629082.7144	177901.6729	2.39
2	627+74.98	35.00	5914.25	629077.2450	177900.8341	7.92
3	627+80.52	35.00	5914.27	629071.7757	177899.9953	13.46
4	627+86.05	35.00	5914.28	629066.3063	177899.1564	18.99
5	627+91.58	35.00	5914.30	629060.8370	177898.3176	24.52
6	627+97.12	35.00	5914.31	629055.3676	177897.4787	30.06
7	628+02.65	35.00	5914.32	629049.8983	177896.6399	35.59
8	628+08.18	35.00	5914.33	629044.4289	177895.8010	41.12
9	628+13.72	35.00	5914.34	629038.9595	177894.9622	46.66
10	628+19.25	35.00	5914.35	629033.4902	177894.1233	52.19
℄ Brg Pier 2 Bk	628+24.78	35.00	5914.36	629028.0208	177893.2845	57.72
℄ PIER 2	628+25.75	35.00	5914.36	629026.9407	177893.1188	58.69
℄ Brg Pier 2 Ah	628+26.73	35.00	5914.36	629026.0991	177892.9897	59.67
2	628+33.76	35.00	5914.35	629019.1450	177891.9232	66.70
3	628+40.80	35.00	5914.35	629012.1908	177890.8566	73.74
4	628+47.83	35.00	5914.34	629005.2367	177889.7900	80.77
5	628+54.87	35.00	5914.33	628998.2826	177888.7235	87.81
6	628+61.90	35.00	5914.32	628991.3285	177887.6569	94.84
7	628+68.94	35.00	5914.30	628984.3744	177886.5903	101.88
8	628+75.98	35.00	5914.29	628977.4203	177885.5238	108.92
9	628+83.01	35.00	5914.27	628970.4662	177884.4572	115.95
10	628+90.05	35.00	5914.24	628963.5120	177883.3906	122.99
℄ Brg Pier 3 Bk	628+97.28	35.00	5914.22	628956.5556	177882.3397	130.22
℄ PIER 3	628+98.26	35.00	5914.22	628955.4750	177882.1811	131.20
℄ Brg Pier 3 Ah	628+99.32	35.00	5914.22	628954.6143	177882.0555	132.26
2	629+05.57	35.00	5914.20	628948.6446	177881.2073	138.51
3	629+11.83	35.00	5914.19	628942.6696	177880.3973	144.77
4	629+18.08	35.00	5914.19	628936.6896	177879.6255	151.02
5	629+24.33	35.00	5914.19	628930.7047	177878.8919	157.27
6	629+30.59	35.00	5914.19	628924.7153	177878.1966	163.53
7	629+36.84	35.00	5914.19	628918.7215	177877.5395	169.78
8	629+43.09	35.00	5914.20	628912.7237	177876.9207	176.03
9	629+49.35	35.00	5914.22	628906.7220	177876.3402	182.29
10	629+55.60	35.00	5914.23	628900.7168	177875.7981	188.54
℄ Brg Abut 4	629+61.85	35.00	5914.26	628894.7082	177875.2944	194.79
Back Face Abut 4	629+64.55	35.00	5914.28	628891.8970	177875.0721	197.49

Notes:

1. Spot Elevations Are To Top Of Concrete Bridge Deck. 0.1667' Below Profile Grade.
2. Spot Elevations Do Not Include Camber. See Dwg. B-15 For Superstructure Deflections And Camber.
3. Stations And Offsets Refer To Horiz. Control Line - Ramp F.
4. Layout Based On Construction Layout of Existing Ramp A Bridge, Structure F-17-IE, Federal Aid Project I-25-2(153). Contractor to Verify Existing Structure Geometry Prior to Beginning of Construction of Bridge Widening.
5. Vertical Geometry Is Based on E-470 Survey of Existing Ramp A Bridge. Contractor to Verify Existing Geometry Prior to Beginning of Construction.

	INITIAL	DATE
DESIGNED BY	S.C.	3/90
CHECKED BY	D.M.	3/90
DETAILED BY	R.B.	3/90
QUANTITIES BY		
CHECKED BY		
UNLOCKED BY		
5/6 D.M.		5/90

E-470
Engineer 470 Partnership

DIVISION OF HIGHWAYS

RAMPS A AND F OVER SW RAMP BRIDGE WIDENING

BRIDGE DECK ELEVATIONS

#1

Designer	S. Call	Structure Numbers	F-17-IE
Detailer	R. Bretz		
Drawing Number	818 of 23 Drawings		

Revision Dates (Preliminary Stage Only)								

QSA2:[40,144]AFDE.90X (1)

ATE OF COLORADO
ATE DEPARTMENT OF HIGHWAYS
ISION OF HIGHWAYS:
.H. FORM NO. 126:
V. FEB. 1984

AS CONSTRUCTED

NO REVISIONS ☐ REVISED ☐ VOID ☐

FED. ROAD REGION	DIVISION	PROJ. NO.	SHEET NO.	SHEET TOTAL
VIII	Colorado	IA06/IB42	54	

REVISIONS		

INITIAL	DATE	
S.C.	3/90	CHECKED BY
D.M.	3/90	QUANTITIES BY
R.B.	3/90	CHECKED BY

DESIGNED BY
CHECKED BY
DETAILED BY

BENT LINE DESCRIPTION OR FRACTIONAL POINT DESIGNATION	STATION	OFFSET	ELEVATION	COORDINATES N	COORDINATES E	GIRDER LINE LENGTH
Longitudinal Line - Girder G5						
Back Face Abut 1	627+62.60	32.00	5913.16	629089.9448	177899.7468	——
℄ Brg Abut 1	627+64.99	32.00	5914.13	629087.5825	177899.3845	0
2	627+70.52	32.00	5914.16	629082.1130	177898.5456	5.53
3	627+76.05	32.00	5914.17	629076.6434	177897.7068	11.07
4	627+81.59	32.00	5914.20	629071.1738	177896.8679	16.60
5	627+87.12	32.00	5914.21	629065.7043	177896.0290	22.13
6	627+92.65	32.00	5914.24	629060.2347	177895.1901	27.67
7	627+98.19	32.00	5914.28	629054.7652	177894.3512	33.20
8	628+03.72	32.00	5914.28	629049.2956	177893.5124	38.73
9	628+09.25	32.00	5914.28	629043.8260	177892.6735	44.27
10	628+14.79	32.00	5914.29	629038.3565	177891.8346	49.80
℄ Brg Pier 2 Bk	628+20.32	32.00	5914.31	629032.8869	177890.9957	55.34
℄ Pier 2	628+21.29	32.00	5914.31	629031.9271	177890.8485	——
℄ Brg Pier 2 Ah	628+22.26	32.00	5914.32	629030.9674	177890.7013	0
2	628+29.30	32.00	5914.32	629024.0155	177889.6351	7.03
3	628+36.33	32.00	5914.33	629017.0636	177888.5690	14.07
4	628+43.36	32.00	5914.33	629010.1117	177887.5028	21.10
5	628+50.40	32.00	5914.33	629003.1597	177886.4366	28.13
6	628+57.43	32.00	5914.33	628996.2078	177885.3704	35.17
7	628+64.46	32.00	5914.32	628989.2559	177884.3043	42.20
8	628+71.50	32.00	5914.31	628982.3040	177883.2381	49.23
9	628+78.52	32.00	5914.30	628975.3521	177882.1719	56.27
10	628+85.56	32.00	5914.28	628968.4002	177881.1057	63.30
℄ Brg Pier 3 Bk	628+92.63	32.00	5914.27	628961.4483	177880.0395	70.33
℄ Pier 3	628+93.63	32.00	5914.27	628960.4861	177879.8935	——
℄ Brg Pier 3 Ah	628+94.64	32.00	5914.27	628959.5223	177879.7482	0
2	629+00.82	32.17	5914.25	628953.5847	177879.0471	5.98
3	629+07.00	32.30	5914.25	628947.6472	177878.3461	11.96
4	629+13.18	32.40	5914.24	628941.7096	177877.6450	17.94
5	629+19.37	32.45	5914.24	628935.7720	177876.9439	23.92
6	629+25.55	32.47	5914.24	628929.8345	177876.2429	29.89
7	629+31.73	32.45	5914.25	628923.8969	177875.5418	35.87
8	629+37.92	32.40	5914.27	628917.9593	177874.8407	41.85
9	629+44.10	32.30	5914.29	628912.0218	177874.1396	47.83
10	629+50.28	32.17	5914.30	628906.0842	177873.4386	53.81
℄ Brg Abut 4	629+56.46	32.00	5914.34	628900.1467	177872.7375	59.79
Back Face Abut 4	629+59.21	32.00	5914.34	628897.4923	177872.5126	——

BENT LINE DESCRIPTION OR FRACTIONAL POINT DESIGNATION	STATION	OFFSET	ELEVATION	COORDINATES N	COORDINATES E	GIRDER LINE LENGTH
Longitudinal Line - Girder G6						
Back Face Abut 1	627+46.89	21.44	5913.68	629107.0666	177891.6936	——
℄ Brg Abut 1	627+49.26	21.40	5913.71	629104.7351	177891.2960	0
2	627+54.66	21.31	5913.75	629099.4121	177890.3882	5.40
3	627+60.06	21.22	5913.78	629094.0891	177889.4804	10.80
4	627+65.45	21.13	5913.82	629088.7661	177888.5726	16.20
5	627+70.85	21.04	5913.85	629083.4431	177887.6648	21.60
6	627+76.25	20.95	5913.89	629078.1200	177886.7570	27.00
7	627+81.65	20.86	5913.93	629072.7970	177885.8493	32.40
8	627+87.05	20.77	5913.96	629067.4740	177884.9415	37.80
9	627+92.45	20.68	5913.99	629062.1510	177884.0337	43.20
10	627+97.85	20.59	5914.04	629056.8280	177883.1259	48.60
℄ Brg Pier 2 Bk	628+03.25	20.50	5914.07	629051.5049	177882.2181	54.00
℄ Pier 2 Bk	628+04.16	20.49	5914.07	629050.6031	177882.0643	——
℄ Pier 2 Ah	628+06.00	21.72	5914.10	629048.5979	177883.0074	——
℄ Brg Pier 2 Ah	628+06.97	21.72	5914.12	629047.6381	177882.8602	0
2	628+14.01	21.72	5914.15	629040.6863	177881.7940	7.03
3	628+21.04	21.72	5914.19	629033.7344	177880.7278	14.07
4	628+28.07	21.72	5914.22	629026.7825	177879.6616	21.10
5	628+35.11	21.72	5914.26	629019.8306	177878.5954	28.13
6	628+42.14	21.72	5914.28	629012.8787	177877.5293	35.17
7	628+49.17	21.72	5914.30	629005.9269	177876.4631	42.20
8	628+56.21	21.72	5914.32	628998.9750	177875.3969	49.23
9	628+63.24	21.72	5914.33	628992.0231	177874.3307	56.27
10	628+70.27	21.72	5914.35	628985.0712	177873.2645	63.30
℄ Brg Pier 3 Bk	628+77.31	21.72	5914.36	628978.1193	177872.1983	70.33
℄ Pier 3	628+78.24	21.70	5914.36	628977.1936	177872.0351	——
℄ Brg Pier 3 Ah	628+79.25	21.73	5914.37	628976.1955	177871.9059	0
2	628+85.12	21.86	5914.37	628970.3699	177871.1522	5.87
3	628+90.99	22.00	5914.38	628964.5444	177870.3984	11.75
4	628+96.99	22.13	5914.39	628958.7188	177869.6447	17.62
5	629+03.00	22.21	5914.39	628952.8933	177868.8909	23.50
6	629+09.01	22.26	5914.40	628947.0677	177868.1372	29.37
7	629+15.02	22.28	5914.43	628941.2422	177867.3834	35.24
8	629+21.03	22.26	5914.45	628935.4166	177866.6297	41.12
9	629+27.04	22.20	5914.47	628929.5911	177865.8759	46.99
10	629+33.05	22.11	5914.50	628923.7655	177865.1222	52.87
℄ Brg Abut 4	629+39.06	21.98	5914.54	628917.9399	177864.3684	58.74
Back Face Abut 4	629+41.59	21.92	5914.56	628915.4832	177864.0505	——

Notes:

1. Spot Elevations Are To Top Of Concrete Bridge Deck. 0.1667' Below Profile Grade.
2. Spot Elevations Do Not Include Camber. See Dwg. B-15 For Superstructure Deflections And Camber.
3. Stations And Offsets Refer To Horiz. Control Line - Ramp F.
4. Layout Based On Construction Layout of Existing Ramp A Bridge, Structure F-17-IE, Federal Aid Project I-25-2(153). Contractor to Verify Existing Structure Geometry Prior to Beginning of Construction of Bridge Widening.
5. Vertical Geometry Is Based on E-470 Survey of Existing Ramp A Bridge. Contractor to Verify Existing Geometry Prior to Beginning of Construction.

E-470
Engineer 470 Partnership

DIVISION OF HIGHWAYS

RAMPS A AND F OVER SW RAMP BRIDGE WIDENING

BRIDGE DECK ELEVATIONS #2

Designer	S. Call	Structure Numbers	F-17-IE
Detailer	R. Bretz		
Drawing Number	B19 of 23 Drawings		

Revision Dates	(Preliminary Stage Only)							

OSA2:[40,144]AFDE.90X (2)

STATE OF COLORADO
STATE DEPARTMENT OF HIGHWAYS
DIVISION OF HIGHWAYS
D.H. FORM NO. 126
REV. FEB. 1984

AS CONSTRUCTED

NO REVISIONS ☐ REVISED ☐ VOID ☐

FED. ROAD REGION	DIVISION	PROJ. NO.	SHEET NO.	SHEET TOTAL
VIII	Colorado	IA06/18ϕ2	51	

REVISIONS		

BENT LINE DESCRIPTION OR FRACTIONAL POINT DESIGNATION	STATION	OFFSET	ELEVATION	COORDINATES N	COORDINATES E	GIRDER LINE LENGTH
Longitudinal Line - Girder G7						
Back Face Abut 1	627+31.19	10.89	5913.12	629124.1865	177883.6412	———
℄ Brg Abut 1	627+33.53	10.81	5913.15	629121.8877	177883.2075	0
2	627+38.79	10.63	5913.20	629116.7113	177882.2308	5.27
3	627+44.06	10.45	5913.26	629111.5348	177881.2541	10.54
4	627+49.32	10.27	5913.32	629106.3583	177880.2774	15.80
5	627+54.59	10.09	5913.37	629101.1818	177879.3007	21.07
6	627+59.85	9.91	5913.43	629096.0054	177878.3240	26.34
7	627+65.12	9.73	5913.48	629090.8289	177877.3473	31.61
8	627+70.38	9.54	5913.54	629085.6524	177876.3706	36.87
9	627+75.65	9.36	5913.59	629080.4759	177875.3939	42.14
10	627+80.91	9.18	5913.63	629075.2995	177874.4172	47.41
℄ Brg Pier 2 Bk	627+86.18	9.00	5913.69	629070.1230	177873.4404	52.68
℄ Pier 2 Bk	627+87.21	8.97	5913.70	629069.1633	177873.2593	———
℄ Pier 2 Ah	627+90.71	11.44	5913.79	629065.2687	177875.1663	———
℄ Brg Pier 2 Ah	627+91.68	11.44	5913.80	629064.3089	177875.0191	0
2	627+98.72	11.44	5913.87	629057.3571	177873.9529	7.03
3	628+05.75	11.44	5913.93	629050.4052	177872.8867	14.07
4	628+12.78	11.44	5914.00	629043.4534	177871.8205	21.10
5	628+19.82	11.44	5914.06	629036.5015	177870.7543	28.13
6	628+26.85	11.44	5914.08	629029.5497	177869.6881	35.17
7	628+33.88	11.44	5914.16	629022.5978	177868.6219	42.20
8	628+40.92	11.44	5914.22	629015.6459	177867.5557	49.23
9	628+47.95	11.44	5914.26	629008.6941	177866.4895	56.27
10	628+54.98	11.44	5914.36	629001.7422	177865.4233	63.30
℄ Brg Pier 3 Bk	628+62.02	11.44	5914.34	628994.7904	177864.3571	70.33
℄ Pier 3	628+62.97	11.45	5914.35	628993.8476	177864.2019	———
℄ Brg Pier 3 Ah	628+63.96	11.45	5914.35	628992.8687	177864.0637	0
2	628+69.73	11.52	5914.36	628987.1551	177863.2572	5.77
3	628+75.50	11.58	5914.41	628981.4416	177862.4508	11.54
4	628+81.27	11.65	5914.43	628975.7281	177861.6444	17.31
5	628+87.04	11.72	5914.46	628970.0145	177860.8379	23.08
6	628+92.82	11.79	5914.49	628964.3010	177860.0315	28.85
7	628+98.66	11.84	5914.52	628958.5874	177859.2251	34.62
8	629+04.50	11.85	5914.55	628952.8739	177858.4186	40.39
9	629+10.34	11.82	5914.59	628947.1603	177857.6122	46.16
10	629+16.18	11.76	5914.63	628941.4468	177856.8058	51.93
℄ Brg Abut 4	629+22.02	11.67	5914.67	628935.7332	177855.9993	57.70
Back Face Abut 4	629+24.49	11.62	5914.69	628933.3237	177855.6592	———

BENT LINE DESCRIPTION OR FRACTIONAL POINT DESIGNATION	STATION	OFFSET	ELEVATION	COORDINATES N	COORDINATES E	GIRDER LINE LENGTH
Longitudinal Line - Girder G8						
℄ Pier 2	627+75.42	1.17	5913.37	629081.9395	177867.3252	———
℄ Brg Pier 2 Ah	627+76.39	1.17	5913.38	629080.9797	177867.1780	0
2	627+83.43	1.17	5913.47	629074.0279	177866.1118	7.03
3	627+90.46	1.17	5913.57	629067.0760	177865.0455	14.07
4	627+97.49	1.17	5913.66	629060.1242	177863.9793	21.10
5	628+04.53	1.17	5913.75	629053.1724	177862.9131	28.13
6	628+11.56	1.17	5913.83	629046.2206	177861.8469	35.17
7	628+18.59	1.17	5913.91	629039.2687	177860.7807	42.20
8	628+25.63	1.17	5914.00	629032.3169	177859.7145	49.23
9	628+32.66	1.17	5914.07	629025.3651	177858.6483	56.27
10	628+39.69	1.17	5914.14	629018.4133	177857.5820	63.30
℄ Brg Pier 3 Bk	628+46.73	1.17	5914.21	629011.4614	177856.5158	70.33
℄ Pier 3	628+47.70	1.17	5914.22	629010.5017	177856.3686	———
℄ Brg Pier 3 Ah	628+48.67	1.17	5914.23	629009.5419	177856.2214	0
2	628+54.33	1.17	5914.28	629003.9404	177855.3623	5.67
3	628+60.00	1.17	5914.33	628998.3388	177854.5032	11.33
4	628+65.67	1.17	5914.38	628992.7373	177853.6441	17.00
5	628+71.34	1.17	5914.44	628987.1357	177852.7849	22.67
6	628+77.00	1.17	5914.48	628981.5342	177851.9258	28.34
7	628+82.67	1.17	5914.53	628975.9327	177851.0667	34.00
8	628+88.34	1.17	5914.57	628970.3311	177850.2076	39.67
9	628+94.01	1.16	5914.61	628964.7296	177849.3485	45.34
10	628+99.68	1.14	5914.66	628959.1281	177848.4893	51.00
℄ Brg Abut 4	629+05.35	1.07	5914.72	628953.5265	177847.6302	56.67
Back Face Abut 4	629+07.75	1.03	5914.74	628951.1642	177847.2679	———
Longitudinal Line - Girder G9						
℄ Pier 3	628+40.08	3.95	5913.97	629018.8013	177852.4649	———
℄ Brg Pier 3 Ah	628+41.04	4.00	5913.98	629017.8671	177852.2711	0
2	628+46.30	4.28	5914.02	629012.7119	177851.2020	5.26
3	628+51.55	4.55	5914.06	629007.5567	177850.1329	10.53
4	628+56.81	4.83	5914.10	629002.4014	177849.0638	15.79
5	628+62.07	5.10	5914.14	628997.2462	177847.9947	21.06
6	628+67.33	5.38	5914.19	628992.0910	177846.9256	26.32
7	628+72.58	5.65	5914.23	628986.9358	177845.8565	31.59
8	628+77.84	5.93	5914.26	628981.7805	177844.7874	36.85
9	628+83.10	6.20	5914.30	628976.6253	177843.7183	42.12
10	628+88.36	6.48	5914.33	628971.4701	177842.6491	47.38
℄ Brg Abut 4	628+93.60	6.75	5914.37	628966.3149	177841.5800	52.65
Back Face Abut 4	628+95.75	6.87	5914.38	628964.1927	177841.1399	———

Notes:

1. Spot Elevations Are To Top Of Concrete Bridge Deck. 0.1667' Below Profile Grade.
2. Spot Elevations Do Not Include Camber. See Dwg. B-15 For Superstructure Deflections And Camber.
3. Stations And Offsets Refer To Horiz. Control Line - Ramp F.
4. Layout Based on Construction Layout of Existing Ramp A Bridge, Structure F-17-IE, Federal Aid Project I-25-2(153). Contractor to Verify Existing Structure Geometry Prior to Beginning of Construction of Bridge Widening.
5. Vertical Geometry Is Based on E-470 Survey of Existing Ramp A Bridge. Contractor to Verify Existing Geometry Prior to Beginning of Construction.

	INITIAL	DATE
DESIGNED BY	S.C.	3/90
CHECKED BY	D.M.	3/90
DETAILED BY	R.B.	3/90
CHECKED BY		3/90
QUANTITIES BY		3/90
CHECKED BY		3/90
S.C. D.M.		8/90

E-470
Engineer 470 Partnership

DIVISION OF HIGHWAYS

RAMPS A AND F OVER SW RAMP BRIDGE WIDENING

BRIDGE DECK ELEVATIONS
#3

Designer	S. Call	Structure Numbers	F-17-IE
Detailer	R. Bretz		

Drawing Number B20 of 23 Drawings

Revision Dates	(Preliminary Stage Only)

QSA2:[40,144]AFDE.90X (3)

STATE OF COLORADO
STATE DEPARTMENT OF HIGHWAYS
DIVISION OF HIGHWAYS
C.D.H. FORM NO. 1261
REV. FEB. 1984

AS CONSTRUCTED			
NO REVISIONS ☐	REVISED ☐	VOID ☐	

FED. ROAD REGION	DIVISION	PROJ. NO.	SHEET NO.	SHEET TOTAL
VIII	Colorado	IA06/IB⊕2	52	

REVISIONS		

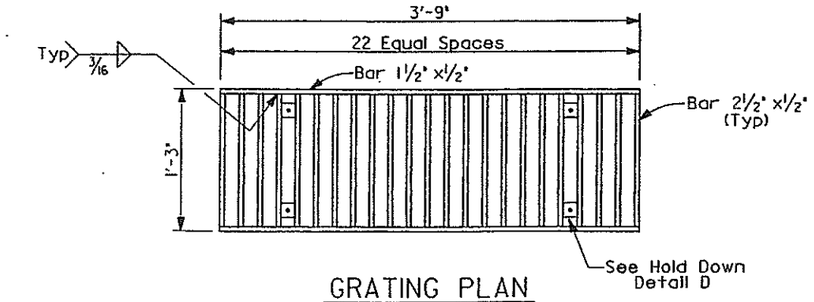

GRATING PLAN

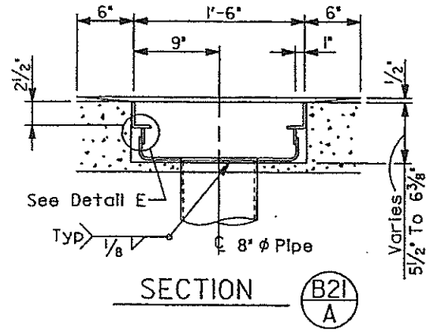

SECTION B21 A

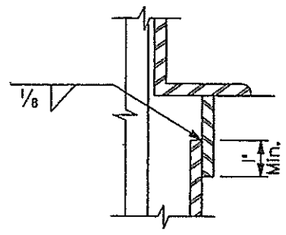

DETAIL E

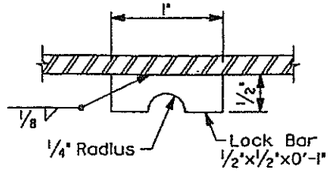

LOCK BAR DETAIL F

NOTES:

1. All Pipes To Be 8" x 0.322 Welded Steel Pipe, ASTM A53 Grade B, Except As Noted. Fittings And Bends Shall Have A Minimum Wall Thickness Of ¼".
2. All Pipes Shall Be Supported At 6'-0" Max. Spacing As Shown In Detail On Drawing No. B
3. All Joints And/Or Connections Shall Be Butt-Welded Or Connected By A Pipe Sleeve And Be Smooth Throughout Inside Of Pipe.
4. All Bends Shall Be On A 2'-6" Minimum Radius Measured Along Centerline Of Pipe. All Bends Shall Be Smooth.
5. Fabricated Deck, Drains, 8" Diameter Pipes, And Pipe Supports Shall Be Galvanized After Fabrication.
6. All Steel Plates, Bars And Shapes Shall Conform To ASTM A36 Unless Otherwise Noted. All Anchor Bolts Shall Conform To ASTM A307.
7. All Galvanized Metal Surfaces To Be Painted Shall Be Blast Cleaned And Chemically Treated As Indicated In The Specifications.
8. All Visible Metal Surfaces For Bridge Drains And 8" Diameter Pipes Shall Be Painted To Match Existing Concrete Surfaces.
9. Paint Shall Be A Two-Coat Urethane System, Or An Epoxy Mastic-Urethane System As Indicated In The Specifications.
10. It Is Estimated 50 L.F. Of Drain Pipe Will Be Required At Pier #3. All Work And Materials To Be Paid For Under Item 513, Bridge Drain (8-Inch)

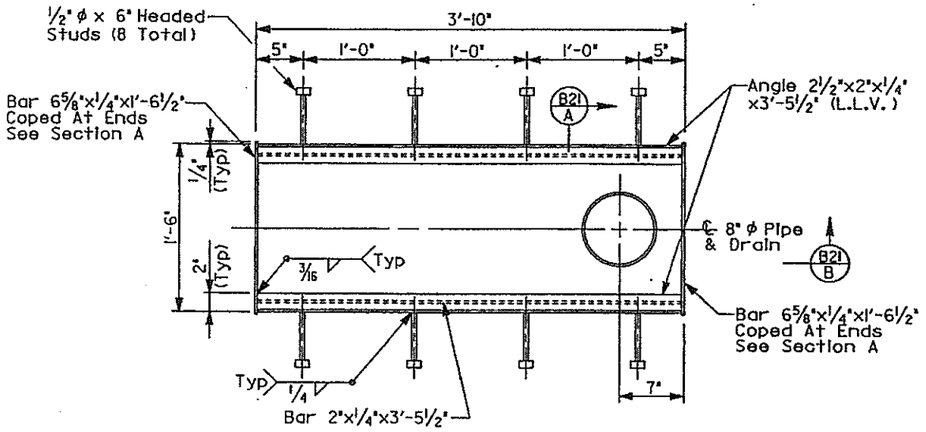

FRAMING PLAN

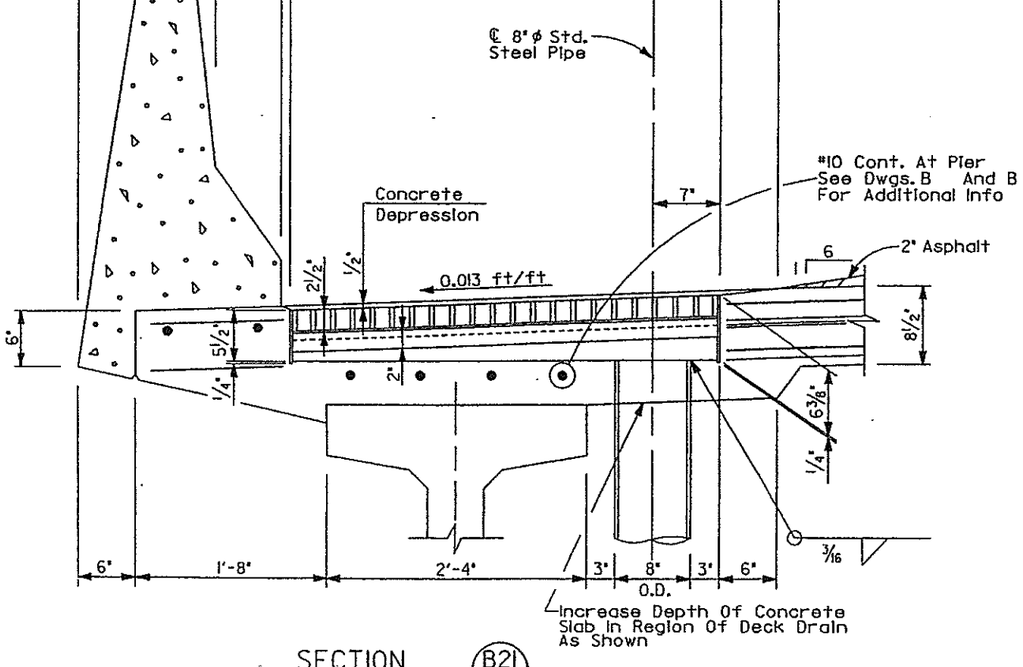

SECTION B21 B
Fabricated Deck Drain

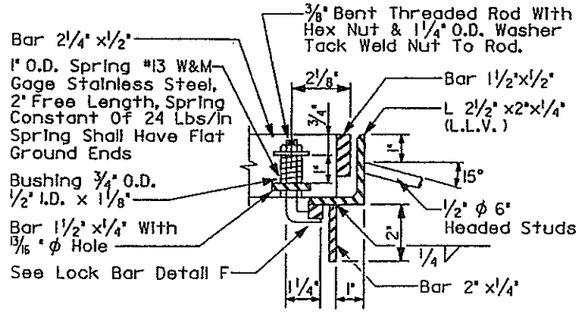

HOLD DOWN DETAIL D

DESIGNED BY	INITIAL	DATE
CHECKED BY	J.S.	3/90
QUANTITIES BY	D.M.	3/90
CHECKED BY	R.B.	3/90
DETAILED BY		

DM	3/90
DM	3/90
CHECKED BY	
QUANTITIES BY	
CHECKED BY	

E-470
Engineer 470 Partnership

DIVISION OF HIGHWAYS

RAMPS A AND F OVER SW RAMP BRIDGE WIDENING

DECK DRAIN DETAILS #1

Designer	J. Showers	Structure Numbers	F-17-IE
Detailer	R. Bretz		

Drawing Number B21 of 23 Drawings

Revision Dates (Preliminary Stage Only)

QSA2:[40,144]AFDDI.90N

ATE OF COLORADO
ATE DEPARTMENT OF HIGHWAYS
VISION OF HIGHWAYS:
O.H. FORM NO. 126:
V. FEB. 1984

AS CONSTRUCTED						
NO REVISIONS ☐	REVISED ☐	VOID ☐	FED. ROAD REGION	DIVISION	PROJ. NO.	SHEET NO.	SHEET TOTAL
			VIII	Colorado	IA06/1B#2	53	

REVISIONS		

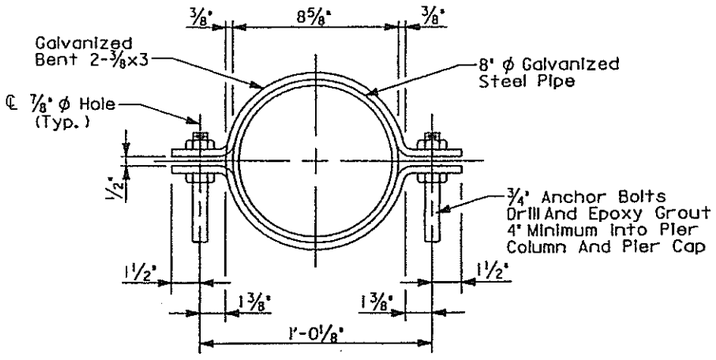

DRAIN PIPE CLAMP DETAIL

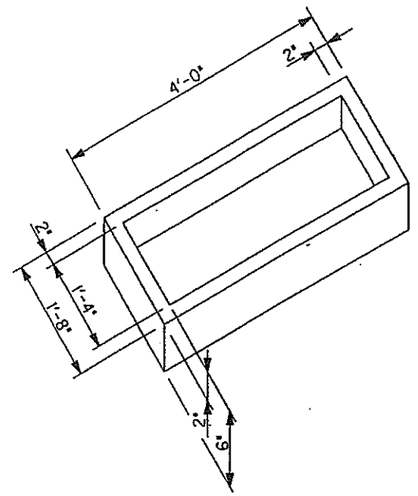

CONCRETE SPLASH BLOCK DETAIL

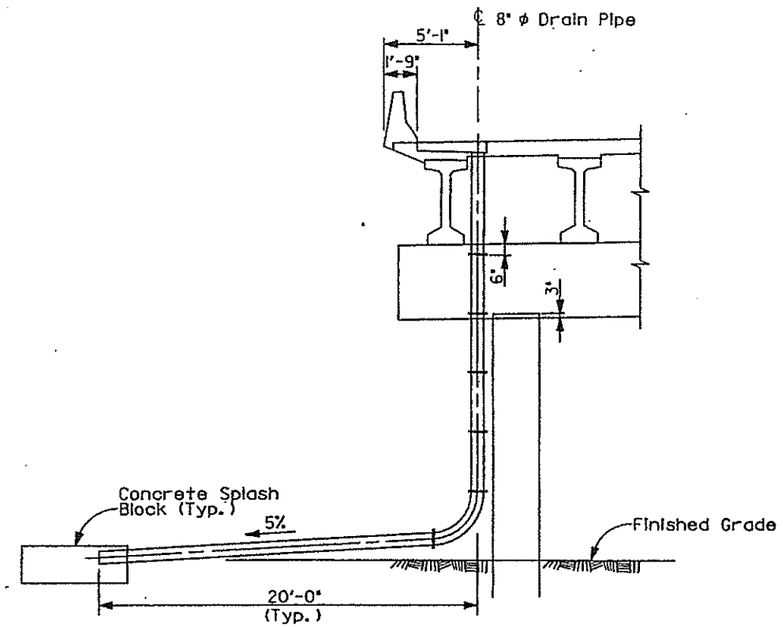

DECK DRAIN DETAIL
Pier #3 Str. F-17-ID

Notes:

1. Use 2'-6" Radius For Elbow.

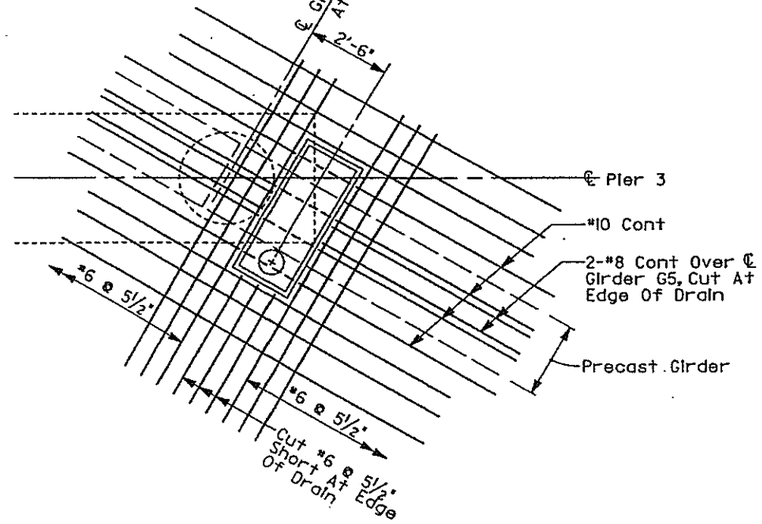

DECK REINFORCING FOR DRAIN OPENING

Partial Plan Of Pier #3 Str. No. F-17-ID Shown.
This Sheet Used In Conjuction With Dwg. No. B13 & B14
Longitudinal Bottom Bars Not Shown For Clarity.

	INITIAL	DATE	CHECKED BY	DATE
DESIGNED BY	J.S	3/90	D.M.	3/90
CHECKED BY	D.M	3/90	QUANTITIES BY	
DETAILED BY	R.B	3/90	CHECKED BY	

E-470
Engineer 470 Partnership

DIVISION OF HIGHWAYS

RAMPS A AND F OVER SW RAMP
BRIDGE WIDENING

DECK DRAIN DETAILS #2

Designer J. Showers		Structure Numbers	F-17-IE
Detailer R. Bretz			
Drawing Number B22 of 23 Drawings			

Revision Dates (Preliminary Stage Only)

OSA2:[40,144]AFDD2.90N

STATE OF COLORADO
DEPARTMENT OF HIGHWAYS
DIVISION OF HIGHWAYS
FORM NO. 126
REV. 1984

AS CONSTRUCTED		
NO REVISIONS ☐	REVISED ☐	VOID ☐

FED. ROAD REGION	DIVISION	PROJ. NO.	SHEET NO.	SHEET TOT
VIII	Colorado	IA06/IB02	54	12

REVISIONS			
A-1	4-2-90	ADDED DRAWING	D.K.M

ROADWAY APPROACHES

ELEVATIONS ON ROADWAY APPROACHES (AT FINISHED GRADE)

STATION	OFFSETS		
	-34.0000	-24.0000	0.0000
2412+60.0	5909.85	5910.38	5911.65
2412+70.0	5909.74	5910.27	5911.54
2412+80.0	5909.62	5910.15	5911.42
2412+90.0	5909.50	5910.03	5911.30
625+00.0	5909.39	5909.92	5911.19
2413+10.0	5909.27	5909.80	5911.07
2413+20.0	5909.15	5909.68	5910.95
265+30.0	5909.03	5909.56	5910.83
625+40.0	5908.92	5909.45	5910.72
2413+50.0	5908.80	5909.33	5910.60
2413+60.0	5908.68	5909.21	5910.48
2413+70.0	5908.57	5909.10	5910.37
2413+80.0	5908.45	5908.98	5910.25
2413+90.0	5908.33	5908.86	5910.13
2414+00.0	5908.22	5908.75	5910.02
2414+10.0	5908.10	5908.63	5909.90

ELEVATIONS AND OFFSETS CONTROLLED OFF OF CONTROL LINE RAMP A

ELEVATIONS ON ROADWAY APPROACHES (AT FINISHED GRADE)

STATION	OFFSETS			
	-34.0000	-24.0000	0.0000	10.0000
629+00.0	5914.42	5914.55	5914.86	5914.99
629+10.0	5914.37	5914.54	5914.95	5915.12
629+20.0	5914.38	5914.58	5915.06	5915.26
629+30.0	5914.39	5914.62	5915.18	5915.41
629+40.0	5914.39	5914.66	5915.30	5915.57
629+50.0	5914.32	5914.72	5915.44	5915.74
629+60.0	5914.46	5914.79	5915.58	5915.91
629+70.0	5914.51	5914.87	5915.73	5916.09
629+80.0	5914.53	5914.93	5915.89	5916.29
629+90.0	5914.60	5915.03	5916.06	5916.49
630+00.0	5914.67	5915.13	5916.23	5916.69
630+10.0	5914.72	5915.22	5916.42	5916.92
630.20.0	5914.81	5915.34	5916.61	5917.14
630+30.0	5914.92	5915.48	5916.82	5917.38
630+40.0	5914.99	5915.59	5917.03	5917.63
630+50.0	5915.11	5915.74	5917.25	5917.88

ELEVATIONS AND OFFSETS CONTROLLED OFF OF CONTROL LINE RAMP F

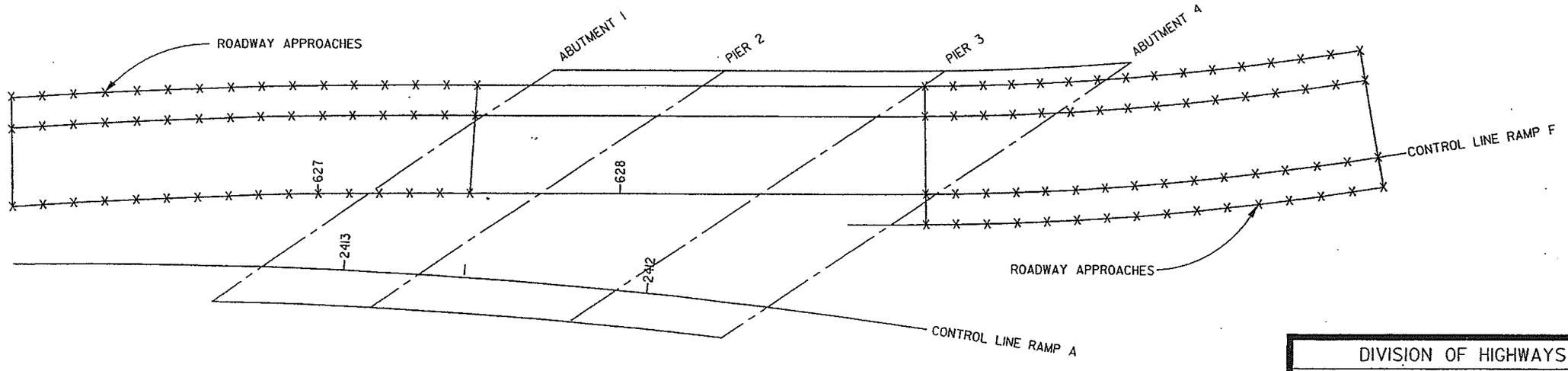

*TANGENT ALIGNMENT

*THIS DRAWING IS A SCHEMATIC AND DOES NOT NECESSARILY REFLECT THE ACTUAL BRIDGE LAYOUT.

	INITIAL	DATE
DESIGNED BY	S.C.	3/90
CHECKED BY	D.M.	3/90
DETAILED BY	R.B.	3/90
CHECKED BY		
QUANTITIES BY	S.C.	3/90
CHECKED BY		

E-470
Engineer 470 Partnership

DIVISION OF HIGHWAYS

RAMPS A AND F OVER SW RAMP
BRIDGE WIDENING

ROADWAY APPROACHES

Designer S. Coil	Structure Numbers	F-17-ID	
Detailer R. Bretz			
Drawing Number	of	Drawings	

Revision Dates (Preliminary Stage Only)

OSA2:[40,144]AFRAOI.DGN

GENERAL NOTES

ALL WORK SHALL BE DONE ACCORDING TO THE STANDARD SPECIFICATIONS OF THE DIVISION OF HIGHWAYS, STATE OF COLORADO, APPLICABLE TO THE PROJECT.

STRUCTURE EXCAVATION AND BACKFILL SHALL BE IN ACCORDANCE WITH STANDARD M-206-2 UNLESS OTHERWISE NOTED. ADEQUATE SHORING OF THE EXCAVATION ADJACENT TO EXISTING ROADWAYS SHALL BE PROVIDED DURING ALL PHASES OF CONSTRUCTION. METHOD OF SHORING SHALL BE SUBMITTED TO THE ENGINEER PRIOR TO EXCAVATION. PAYMENT FOR SHORING TO BE INCLUDED IN ITEM 206 STRUCTURE EXCAVATION.

EXPANSION JOINT MATERIAL SHALL MEET AASHTO SPECIFICATION M-213.

THE FOLLOWING STRUCTURAL STEEL SHALL BE AASHTO M-183 (ASTM A-36): INTERIOR BRACING OF BOX GIRDERS (INTERIOR CROSS-FRAMES, LATERAL BRACING AT TOP FLANGE, AND GUSSET PLATES) AND TEMPORARY ERECTION CROSS FRAMES BETWEEN BOX GIRDERS.

THE FOLLOWING STRUCTURAL STEEL SHALL BE AASHTO M-223 (ASTM A-572 GRADE 50): BOX GIRDER WEBS, FLANGES, TRANSVERSE WEB STIFFENERS, ALL SPLICE MATERIAL, LONGITUDINAL FLANGE STIFFENERS, DIAPHRAGM WEBS AND STIFFENERS, AND BEARING STIFFENERS.

FOLLOWING MEMBERS SHALL BE FRACTURE CRITICAL: ALL STRUCTURAL ELEMENTS USING AASHTO M-223 (ASTM A-572) STEEL AND ANY MEMBER INDICATED AS (FCM) IN THESE DRAWINGS.

ALL BOLTS SHALL BE ⅞ INCH DIAMETER, AASHTO M-164 (ASTM A-325) HIGH STRENGTH, UNLESS OTHERWISE NOTED.

NO WELDING OF ANY ATTACHMENT SHALL BE PERMITTED ON THE FLANGES OF STEEL GIRDERS UNLESS SPECIFICALLY CALLED FOR ON THE PLANS. ALL GROOVE WELDS SHALL BE ULTRASONICALLY TESTED AS PER SECTION 6.7 OF ANSI/AASHTO/AWS D1.5-88.

ALL STEEL, NOT OTHERWISE NOTED, SHALL BE PAINTED IN ACCORDANCE WITH SECTION 509 OF THE STANDARD SPECIFICATIONS. THE COLOR (DARK TAN) SHALL MATCH THE EXISTING FLYOVER BRIDGES (RAMPS B AND C) AND IS TO BE SELECTED FROM TEST PANELS PROVIDED BY THE CONTRACTOR.

GRADE 60 REINFORCING STEEL IS REQUIRED FOR #4 BARS AND LARGER. ALL REINFORCING STEEL SHALL BE EPOXY COATED, UNLESS NOTED OTHERWISE.

THE FOLLOWING TABLE GIVES THE MINIMUM CLASS B LAP SPLICE LENGTH FOR EPOXY COATED REINFORCING BARS.

BAR SIZE	#4	#5	#6	#7	#8	#9	#10	#11
SPLICE LENGTH FOR CLASS B CONCRETE	1'-3"	1'-6"	2'-0"	2'-8"	3'-9"	4'-5"	5'-7"	6'-10"
SPLICE LENGTH FOR CLASS D CONCRETE	1'-3"	1'-6"	1'-10"	2'-2"	2'-10"	3'-7"	4'-7"	5'-7"

THE ABOVE SPLICE LENGTHS SHALL BE INCREASED BY 20 PERCENT FOR 3 BAR BUNDLES AND 33 PERCENT FOR 4 BAR BUNDLES.

A COLORED STRUCTURAL COATING (ACRYLIC) WILL BE REQUIRED ON ALL EXPOSED CONCRETE SURFACES DOWN TO 1'-0" BELOW GROUND LINE. THE COLOR (LIGHT BUFF) SHALL MATCH THE EXISTING FLYOVER BRIDGES (RAMPS B AND C)AND IS TO BE SELECTED FROM TEST PANELS PROVIDED BY THE CONTRACTOR. REQUIREMENTS FOR COATING ARE GIVEN IN REVISION OF SECTION 601, STRUCTURAL CONCRETE (COATING).

THE CONTRACTOR SHALL BE RESPONSIBLE FOR THE STABILITY OF THE STRUCTURE DURING CONSTRUCTION.

FOR STRUCTURE NUMBER INSTALLATION, SEE STANDARD S-614-12.

PERMANENT STEEL DECK FORMS ARE REQUIRED FOR ALL INTERIOR SLAB SPANS AS SHOWN IN THE TYPICAL SECTION, BUT SHALL NOT BE USED ON THE EXTERIOR CANTILEVERS. FORMS SHALL NOT BE ATTACHED TO THE STEEL BOX GIRDERS BY WELDING.

THE INFORMATION SHOWN ON THESE PLANS CONCERNING TYPE AND LOCATION OF UNDERGROUND UTILITIES IS NOT GUARANTEED TO BE ACCURATE OR ALL INCLUSIVE. THE CONTRACTOR IS RESPONSIBLE FOR MAKING HIS OWN DETERMINATION AS TO THE TYPE AND LOCATION OF UNDERGROUND UTILITIES AS MAY BE NECESSARY TO AVOID DAMAGE THERETO.

THE FOLLOWING ARE STANDARD ABBREVIATIONS:

E.F. = EACH FACE	E.W. = EACH WAY
F.F. = FAR FACE	T.F. = TOP FACE
N.F. = NEAR FACE	B.F. = BOTTOM FACE
H.C.L. = HORIZONTAL CONTROL LINE	CONT. = CONTINUOUS
H.B.P. = HOT BITUMINOUS PAVEMENT	(B) = BLACK REINFORCING BAR (DENOTES NON-EPOXY COATED REINFORCING BAR)

STEEL FRAMING AND GIRDER DIMENSIONS ARE BASED ON A TEMPERATURE OF 40°F.

ANY CONSTRUCTION JOINTS AND/OR REINFORCING BAR SPLICES NOT SHOWN ON THE PLANS, BUT PROPOSED BY THE CONTRACTOR, SHALL BE APPROVED BY THE ENGINEER.

DESIGN NOTES

CURRENT AASHTO SPECIFICATIONS:

LIVE LOAD : AASHTO HS-20-44 AND INTERSTATE ALTERNATE
DEAD LOAD : ASSUMES 48 LBS. PER SQ. FT. FOR BITUMINOUS PAVEMENT
ASSUMES 12 LBS. PER SQ. FT. FOR STAY-IN-PLACE CONCRETE FORMWORK

REINFORCED CONCRETE:
CLASS B CONCRETE: f_c = 1,200 psi, n = 9, f'_c = 3,000 psi AT 28 DAYS
CLASS D CONCRETE: f_c = 1,800 psi, n = 8, f'_c = 4,500 psi AT 28 DAYS

REINFORCING STEEL: #4 BARS AND LARGER: f_s = 24,000 psi, f_y = 60,000 psi

STRUCTURAL STEEL: AASHTO M-183 (ASTM A-36) f_s = 20,000 psi, F_y = 36,000 psi
AASHTO M-222 (ASTM A-572) f_s = 27,000 psi, F_y = 50,000 psi

PRESTRESSING STEEL: HIGH STRENGTH SEVEN-WIRE STRAND CONFORMING TO THE REQUIREMENTS OF AASHTO M203, GRADE 270 AND SHALL BE LOW-RELAXATION CONFORMING TO SUPPLEMENT 1 OF M203.

DESIGN METHOD:
SUPERSTRUCTURE: SERVICE LOAD DESIGN (WORKING STRESS)
SUBSTRUCTURE: SERVICE LOAD (WORKING STRESS) EXCEPT LOAD FACTOR DESIGN FOR PIER COLUMNS AND CAISSONS.

	INITIAL	DATE
Designed By	AEG	1-90
Checked By	JLS	2-90
Detailed By	GMC	1-90
Checked By		2-90
Quantities By	JHP	2-90
Checked By		2-90
	AEG	2-90

INDEX OF DRAWINGS

DWG. NO.	DESCRIPTION
B-1	GENERAL INFORMATION
B-2	SUMMARY OF QUANTITIES SHEET
B-3	GENERAL LAYOUT
B-4	GENERAL LAYOUT
B-5	ENGINEERING GEOLOGY
B-6	CONSTRUCTION AND CAISSON LAYOUT
B-7	CONSTRUCTION AND CAISSON LAYOUT
B-8	CAISSON DETAILS
B-9	ABUTMENT #1 & #6 PLAN, ELEVATION & SECTION
B-10	WINGWALL DETAILS
B-11	MISCELLANEOUS ABUTMENT & WINGWALL DETAILS
B-12	PIER #2, #3 AND #5 DETAILS
B-13	CARRIER BEAM DETAILS AT PIER #4
B-14	PIER #4 DETAILS
B-15	FRAMING PLAN AND GIRDER ELEVATION
B-16	FRAMING PLAN AND GIRDER ELEVATION
B-17	FRAMING PLAN AND GIRDER ELEVATION
B-18	CAMBER CUTTING DIAGRAM
B-19	CAMBER CUTTING DIAGRAM
B-20	INTERMEDIATE STIFFENERS AND CROSSFRAME DETAILS
B-21	END DIAPHRAGM DETAILS, ABUTMENT #1 & #6
B-22	INTERIOR DIAPHRAGM DETAILS PIERS #2,#3 & #5
B-23	INTERIOR DIAPHRAGM DETAILS PIER #4
B-24	LATERAL BRACING DETAILS
B-25	FIELD SPLICE DETAILS
B-26	PINTLE DETAILS
B-27	ACCESS MANHOLE AND MISCELLANEOUS STEEL DETAILS
B-28	DECK REINFORCEMENT DETAILS
B-29	DECK REINFORCEMENT DETAILS
B-30	DECK REINFORCEMENT DETAILS AT EXPANSION DEVICE
B-31	CONCRETE PLACEMENT SEQUENCE
B-32	BRIDGE EXPANSION JOINT REINFORCING (0-6 INCH)
B-33	BRIDGE EXPANSION DEVICE (0-6 INCH)
B-34	BRIDGE RAIL TYPE 4 (470)
B-35	BEARING DEVICE (TYPE III) DETAILS
B-36	BEARING DEVICE (TYPE III) DETAILS
B-37	BRIDGE DRAIN (SPECIAL)
B-38	BRIDGE DRAIN (SPECIAL)
B-39	INTERIOR LIGHTING DETAILS
B-40	APPROACH SLAB DETAILS
B-41	SLOPE PAVING DETAILS
B-42	BRIDGE DECK ELEVATIONS
B-43	BRIDGE DECK ELEVATIONS
B-44	BRIDGE DECK ELEVATIONS
B-45	ROADWAY APPROACHES

AS CONSTRUCTED						FEDERAL ROAD REGION NO.	DIVISION	PROJECT NUMBER	SHEET NUMBER
NO REVISIONS		REVISED		VOID		VIII	COLORADO	1A06/1802	111

REVISIONS		
- -		
- -		
- -		

Cross Reference Drawing Number

B

Section or Detail Identification

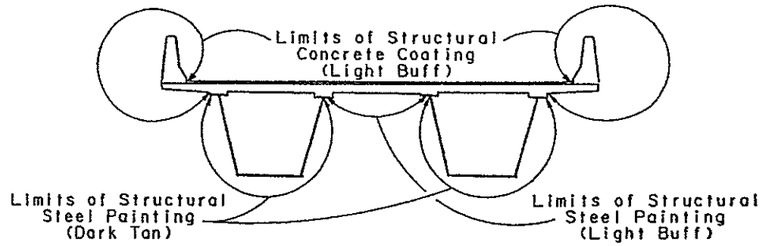

SUPERSTRUCTURE COATING FINISH DIAGRAM

BRIDGE DESCRIPTION

5 SPANS (98'-0", 132'-0", 138'-1⅛", 147'-10⅝", 115'-0"), CONTINUOUS AND COMPOSITE WELDED STEEL BOX GIRDERS.
RAMP (WB TO SB) OVER I-25 BRIDGES AND SH 470/E-470 CONNECTOR; AND UNDER EXISTING DIRECTIONAL RAMP C (NB TO WB), AND FUTURE RAMP F (SB TO EB).
27'-0" ROADWAY WIDTH CURB TO CURB, SKEW 90°00'00" (RADIAL)
1'-9" CONCRETE BRIDGE RAIL TYPE 4 (470).

E-470
Engineer 470 Partnership

DIVISION OF HIGHWAYS
I-25/470 INTERCHANGE
RAMP E FLYOVER
GENERAL INFORMATION
STA. 984+22.16 TO STA. 991+53.16
Near: Denver Sec.3 T.6S. R.67W.

Designer A. Griffith		Structure Numbers	F - 17 - JW
Detailer G.Christinacht			
Drawing Number	B-1	of	45 Drawings

GENERAL NOTES AND DRAWING INDEX

SEGEN0113.90A

SS3311UNIVIT U:\SS3311UNIVIT\SE2411205A\B1\PAGE1\SEGEN0113.90A
LPU INNAM

AS CONSTRUCTED					
NO REVISIONS		REVISED		VOID	

FEDERAL ROAD REGION NO.	DIVISION	PROJECT NUMBER	SHEET NUMBER
VIII	COLORADO	1A06/1802	113

REVISIONS		
- -		
- -		
- -		

INITIAL	DATE	Designed By	AEG	2-90
AEG	1-90	Checked By	JMP	2-90
JMP	1-90	Quantities By	JMP	2-90
GMC	1-90	Checked By	ATG	2-90

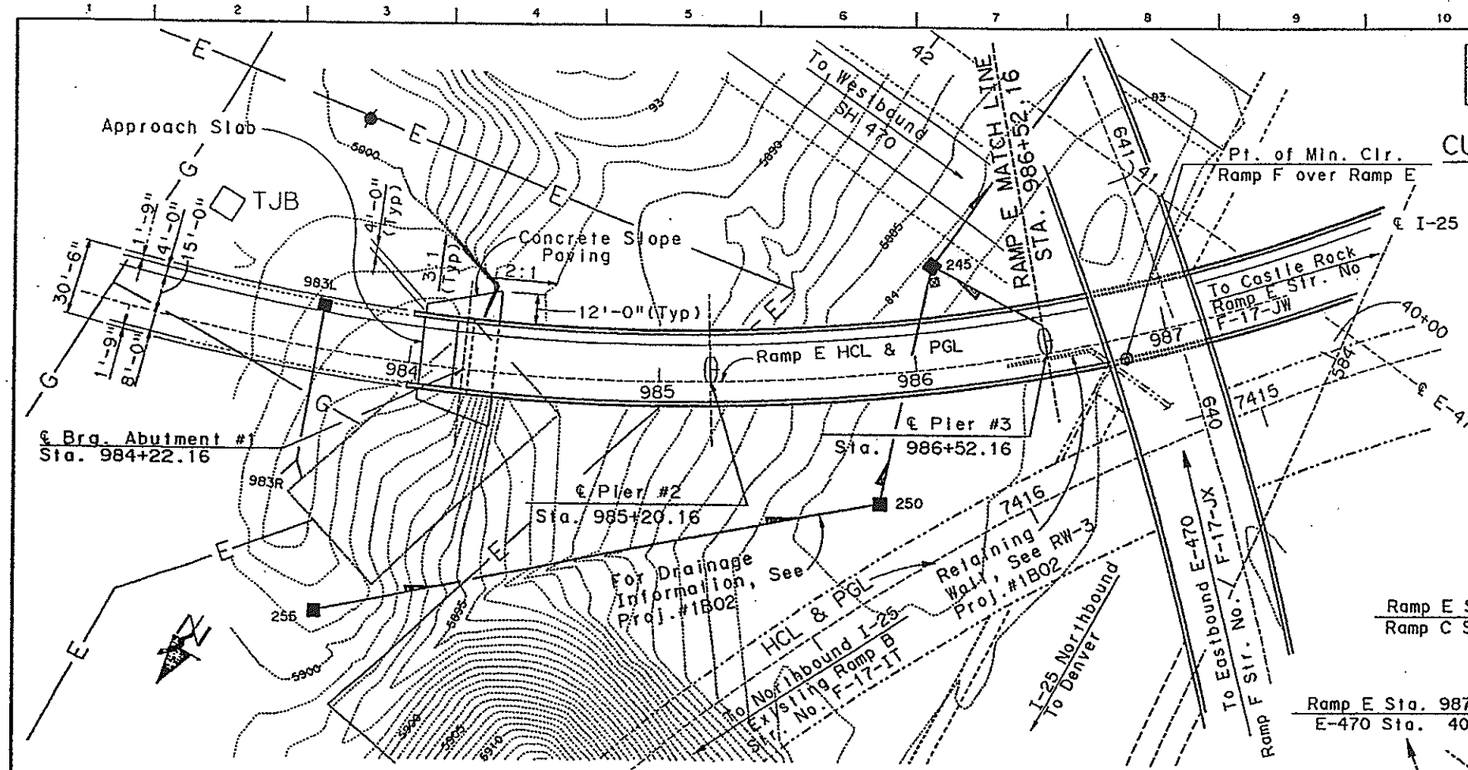

PLAN

* Note: All Centerline of Abutments and Piers are radial, except as noted at ℄ Pier #4.

CURVE DATA - RAMP E

CURVE E-1

Δ = 127°19'49" LT.
D = 7°00'00"
Tc = 1653.60 ft.
R = 818.51 ft.
L = 1819.00 ft.
e = 0.079 '/ft.

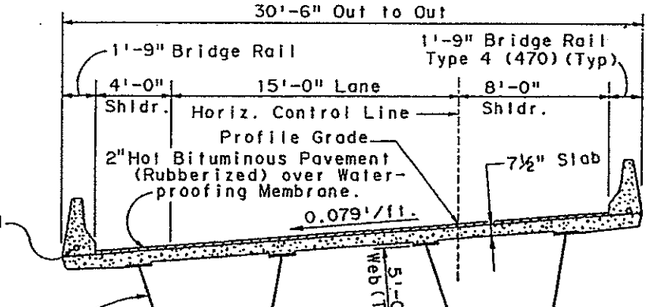

TYPICAL SECTION

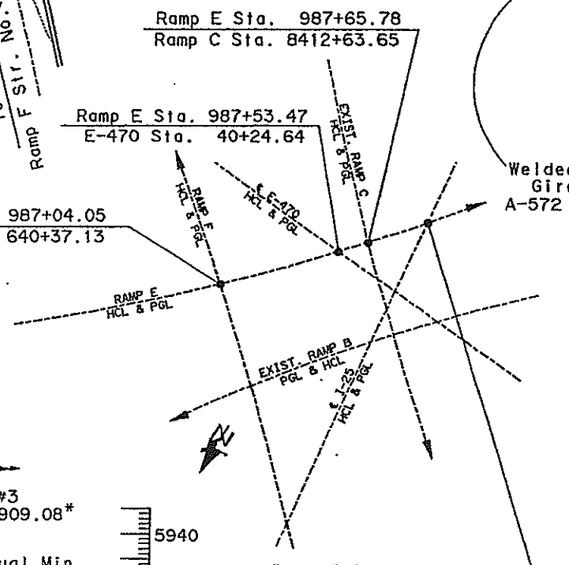

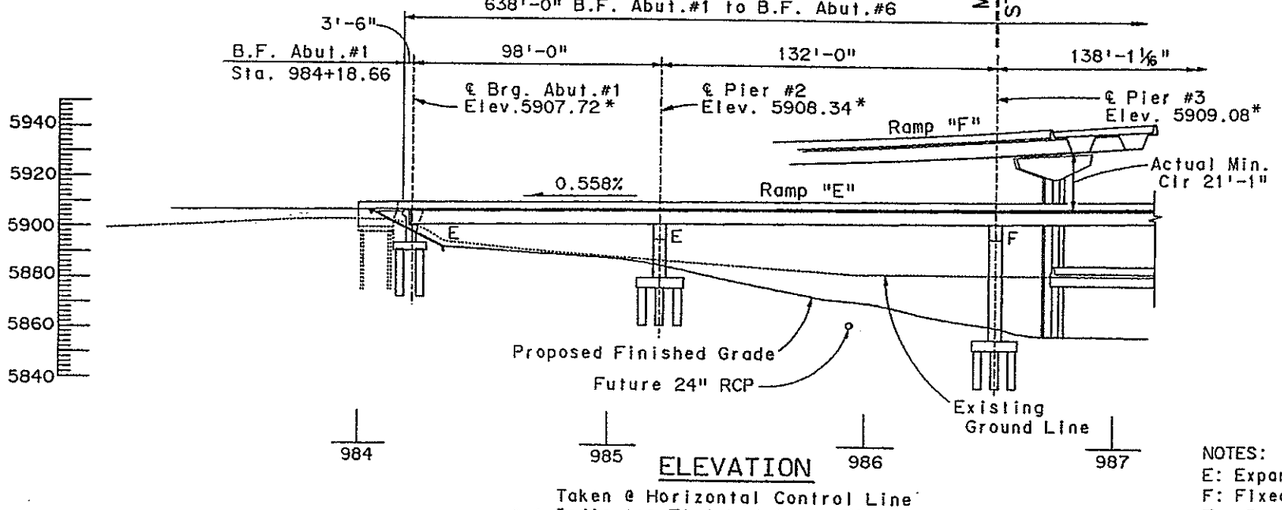

ELEVATION

Taken @ Horizontal Control Line
* : Indicates Finished Grade Elevations.

NOTES:
E: Expansion Bearing
F: Fixed Bearing
For Ramp Profiles, See Dwg. No. B-4

E-470
Engineer 470 Partnership

DIVISION OF HIGHWAYS
I-25/470 INTERCHANGE
RAMP "E"
GENERAL LAYOUT

Designer A. Griffith	Structure Numbers	F - 17 - JW	
Detailer A. Griffith			
Drawing Number B-3	of	45	Drawings

RAMP E - GENERAL LAYOUT SHEET

SEGLT0113.90E

USERNAME: GMC
\\\\\\DGN\PLCS\\\\\\\\\\\\\\\\
ST2411\SDSABC\\\\\\\\\\\\\\\\

AS CONSTRUCTED					
NO REVISIONS		REVISED		VOID	

FEDERAL ROAD REGION NO.	DIVISION	PROJECT NUMBER	SHEET NUMBER
VIII	COLORADO	1A06/1802	114

REVISIONS		
- -		
- -		
- -		

	INITIAL	DATE
Designed By	AEG	1-90
Checked By	JHP	1-90
Detailed By	AEG	1-90

Checked By	AEG	2-90
Quantities By	JHP	2-90
Checked By	AEG	2-90

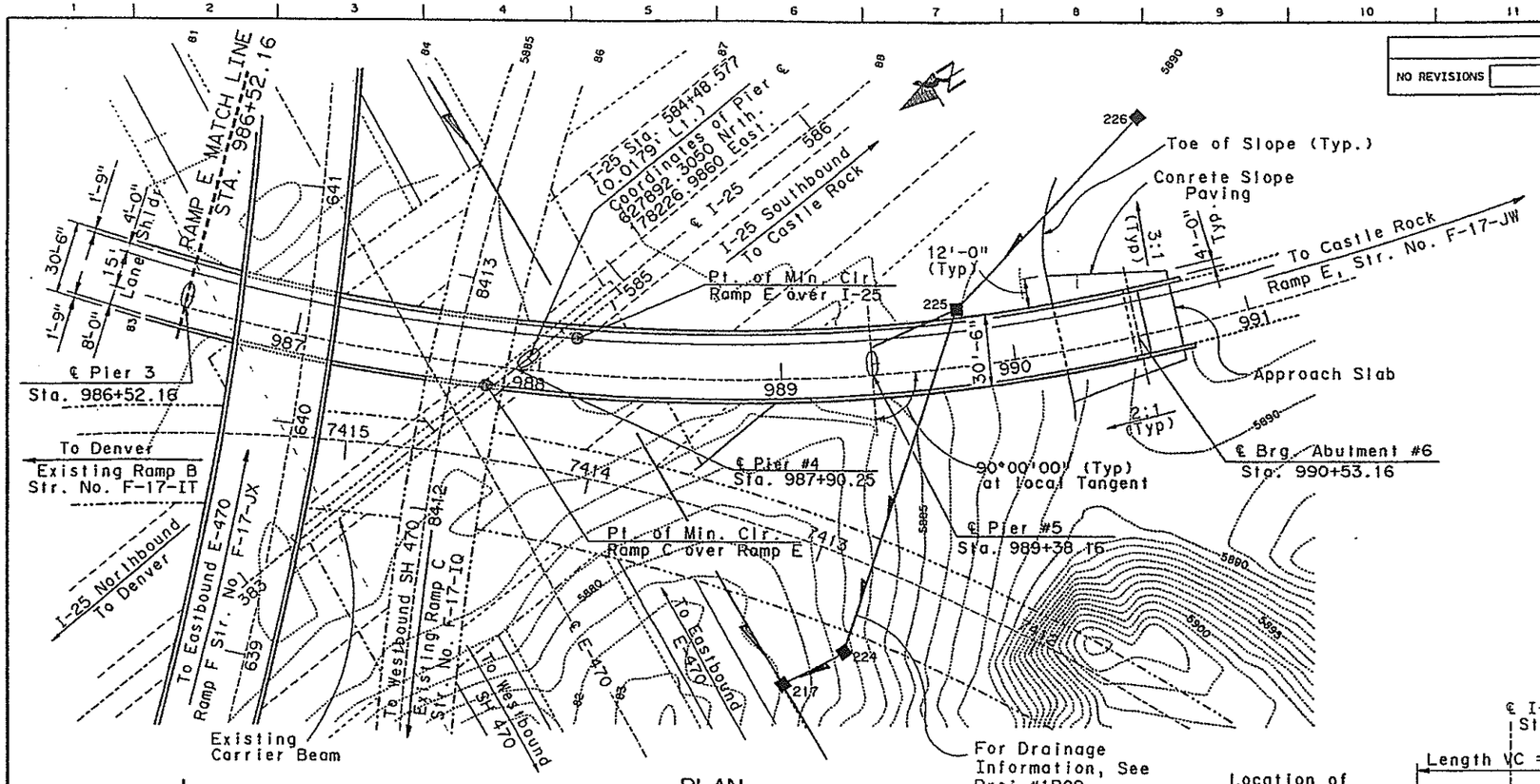

PLAN

* Note: All Centerline of Abutments and Piers are Radial, except as noted at ℄ Pier #4.

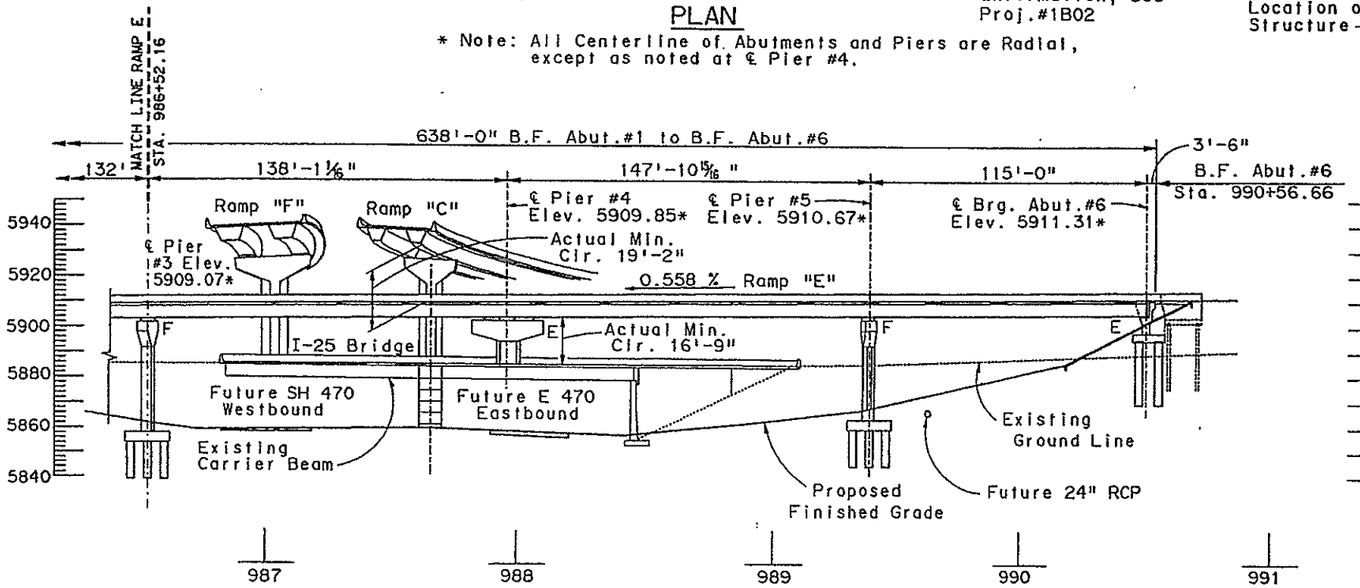

ELEVATION

Taken @ Horizontal Control Line
* : Indicates Finished Grade Elevations.

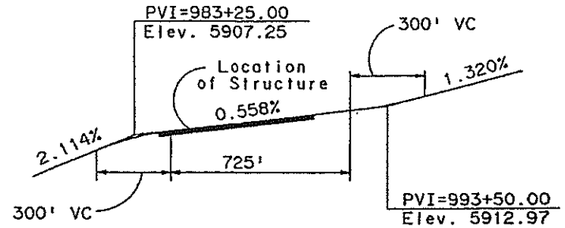

PROFILE RAMP E

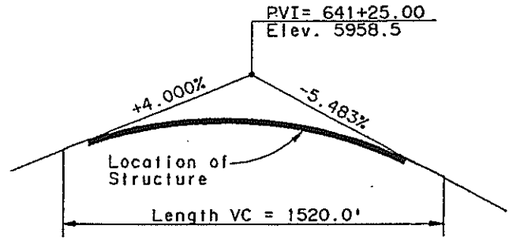

PROFILE RAMP F

For Curve Data for Ramp F, See Sheet No.

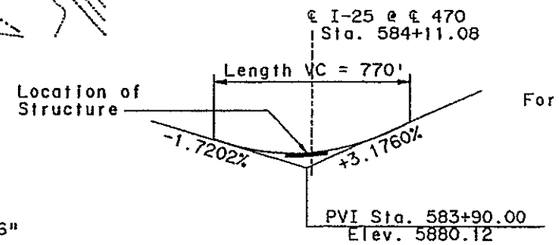

PROFILE RAMP I-25

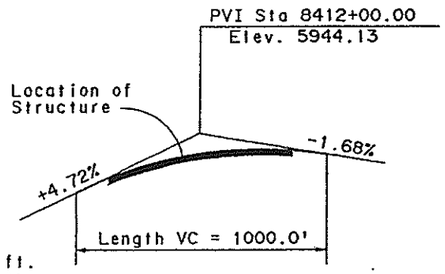

PROFILE RAMP C

CURVE DATA - RAMP C

Δ = 100°12'13.7"	R = 1206.23 ft.
D = 4°45'00"	L = 2109.55 ft.
T = 1442.73 ft.	e = 0.069 '/ft.
E = 674.32'	

Datum Difference: Profile Elevation on As Builts have been increased 0.58' to adjust for datum difference.

DIVISION OF HIGHWAYS

I-25/470 INTERCHANGE
RAMP E FLYOVER
GENERAL LAYOUT

Designer A. Griffith	Structure Numbers	F - 17 - JW
Detailer A. Griffith		
Drawing Number B-4	of	45 Drawings

E-470
Engineer 470 Partnership

RAMP E - GENERAL LAYOUT SHEET 2

SEGLT0213.90E

11111OGVSPEC1111111111111111
USERNAME
S7241150SAJE56334F961SEGLT0213.90E

FED ROAD REG NO.	DIVISION	PROJECT NO.	SHEET NO.	TOTAL SHEETS
VIII	COLORADO	I A 0 6/180Z	115	

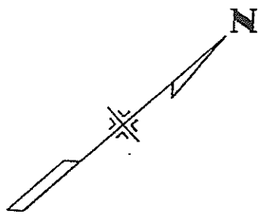

APPROXIMATE SCALE : 1" = 40'

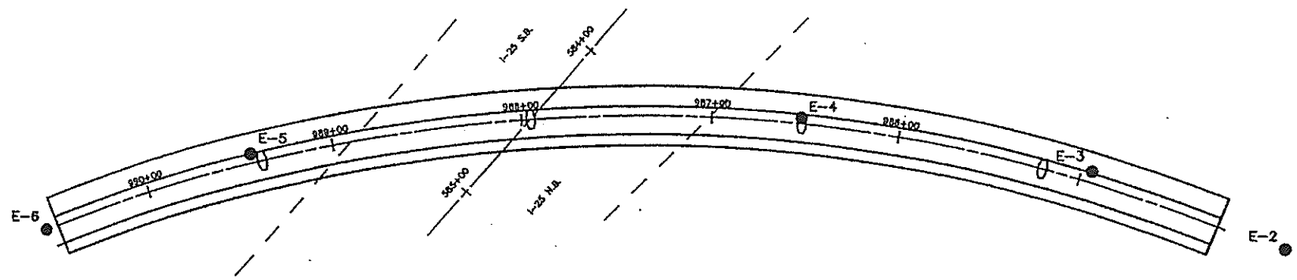

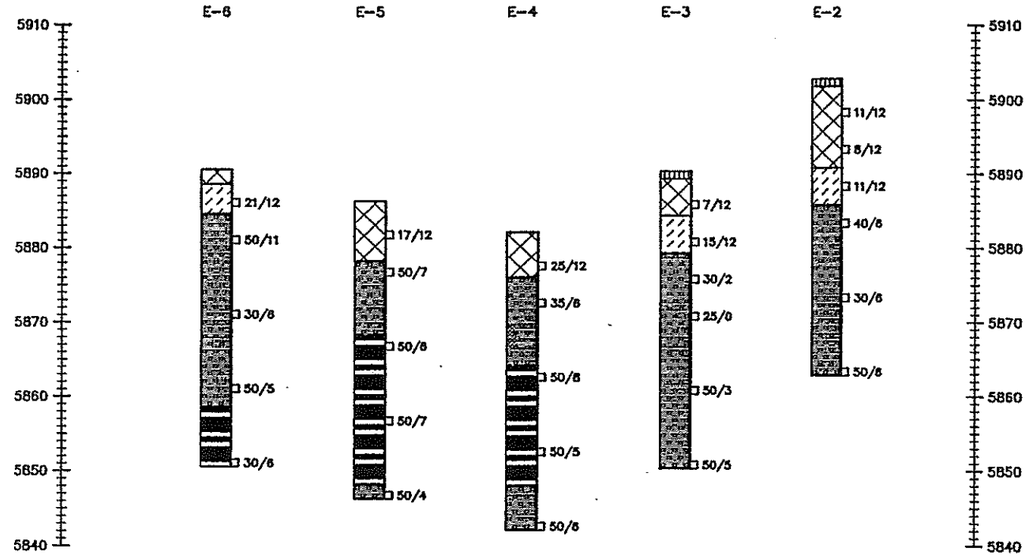

SUMMARY OF TEST RESULTS

Sample No.	Depth	Classification: Corp of Engrs. or Visual	Classification: AASHTO	Grading Analysis: Percent Gravel	Coarse Sand	Fine Sand	Silt and Clay	Atterberg Limits: Liquid Limit LL	Plastic Limit PL	Plasticity Index PI	Water Cont. W %	Dry Unit Weight γd P.C.F.	Unconfined Strength Qu T.S.F.	Triaxial Shear Strength: φ°	C P.S.I.	Dia. of Sample (Inches)
E-2	4	Fill, clay									19.1	124				1.935
E-2	14	Clay, sandy CL									14.5	127				1.935
E-3	29	Sandstone					6				5.0					1.935
E-4	4	Fill, clay									14.6	130				1.935
E-4	9	Sandstone					5				3.3					1.935
E-4	19	Claystone									22.2	126	5.1			1.935
E-5	9	Sandstone					7				4.8					1.935
E-5	19	Claystone									16.2	135				1.935
E-5	29	Claystone									20.2	129	6.6			1.935
E-6	4	Clay, sandy CL									13.9	120				1.935
E-6	19	Sandstone									18.5	129	5.7			1.935

TYPE OF MATERIAL

Asphalt pavement and base course.

Fill, clay, sandy, claystone, some asphalt, medium stiff to very stiff, moist to very moist, brown, olive, gray.

Clay, sandy, stiff to very stiff, slightly moist to moist, brown, tan, porous in places (CL).

Sandstone bedrock, silty to clayey, hard to very hard, slightly moist to moist, lt. gray, tan, rust, olive.

Claystone bedrock, silty to sandy, hard to very hard, moist, olive, gray, brown, rust.

LEGEND

TEST BORING

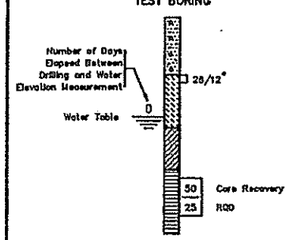

" DRIVE SAMPLE

The symbol 26/12 indicates 26 blows of a 140 pound hammer falling 30 inches were required to drive a 2.5 inch o.d. sampler 12 inches.

Location of Test Boring

NOTES

1. No free water was measured in the borings at the time of drilling.

E-470

RAMP E
E-470 AT I-25

ENGINEERING GEOLOGY

CTL/Thompson, Inc.

Drawn by WJW
Checked by CSM
Date September 1989

STRUCTURE
DWG NO. B -5 OF 45

AS CONSTRUCTED					
NO REVISIONS		REVISED		VOID	

FEDERAL ROAD REGION NO.	DIVISION	PROJECT NUMBER	SHEET NUMBER
VIII	COLORADO	1A06	116

REVISIONS			
A-1	4-02-90	Dimension @ Fascia & Notes	JHP
	- -		
	- -		

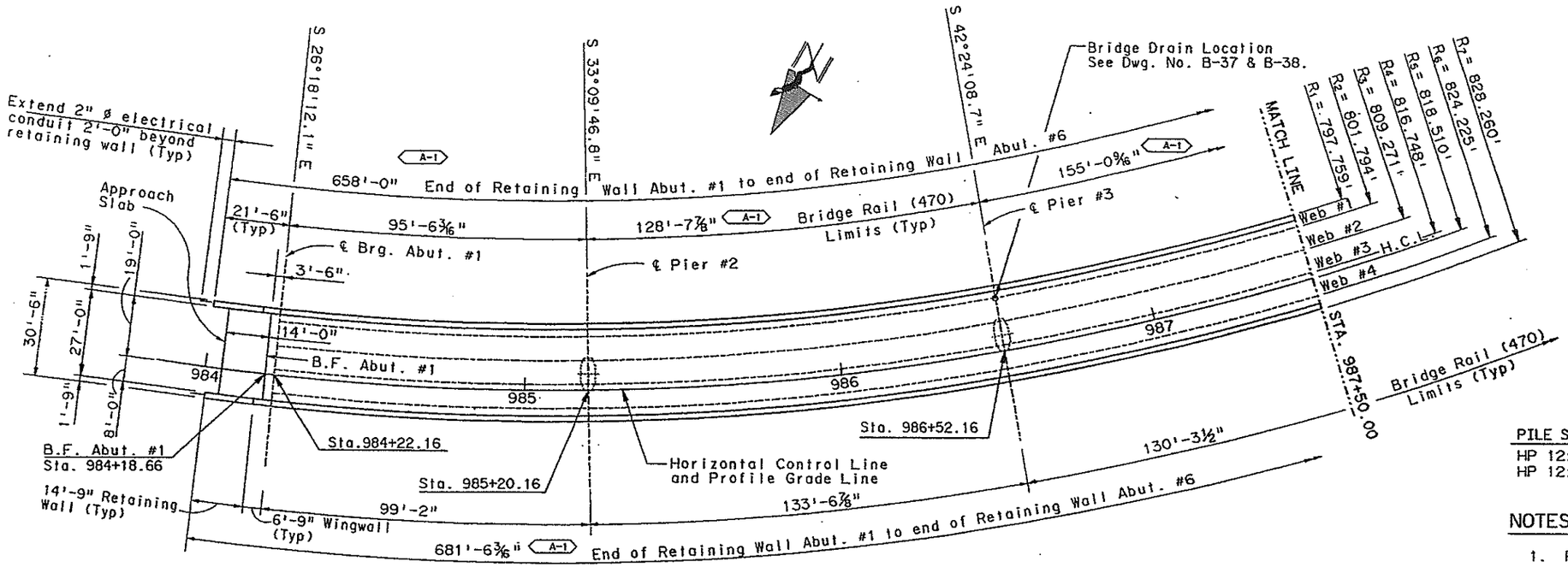

CONSTRUCTION LAYOUT

Note: All Abutments and Piers are radial, except Pier #4 as noted.
Radius R1 thru R7 are constant for Ramp E Structure.
2 ø Conduits in both bridge rails not shown for clarity.
See Dwg. No. B-28 for location.

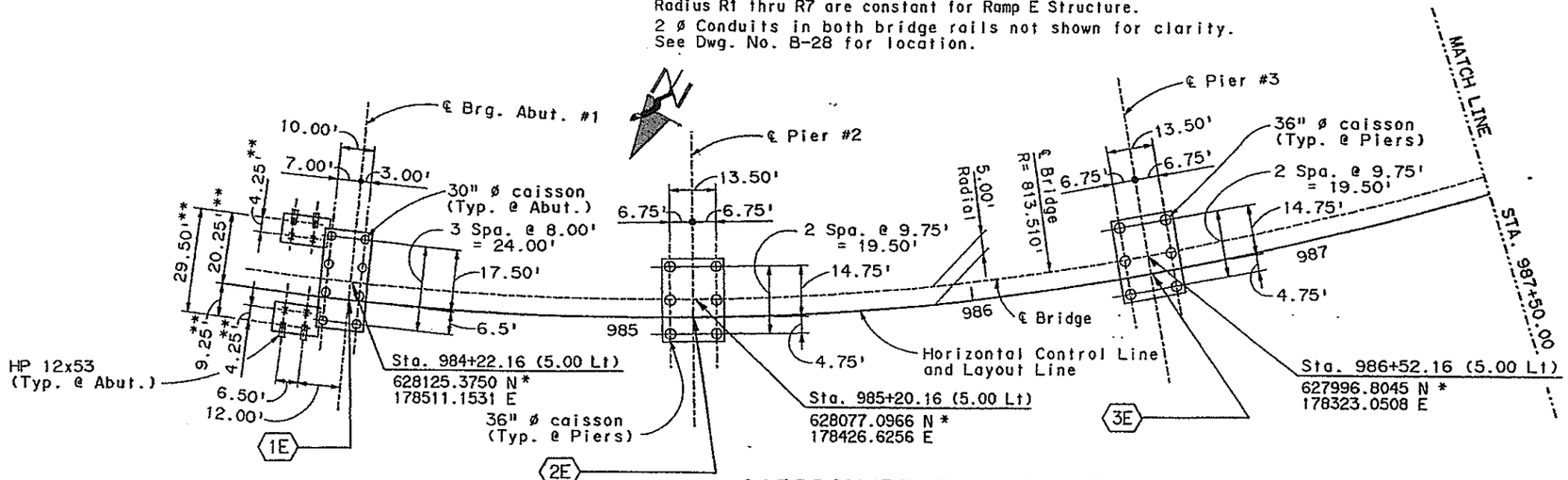

CAISSON/PILING LAYOUT

Note: All Abutments and Piers are radial, except Pier #4 as noted.

A-1 * :Modified State Plane Coordinates for Centeral Region given at Center of Columns, Abutments and footings have been adjusted for superelevations.

** : Dimension given is radial to Horizontal Control Line.

PILE SIZE	LOCATION	EST. TIP ELEV.	QUANTITY
HP 12x53	Abut. 1	5873.00	8 Total
HP 12x53	Abut. 6	5876.00	8 Total

NOTES:

1. Piling & Caisson location dimensions are shown at bottom of concrete cap.
2. ⊟ Indicates piling to be battered, 3:12 in the direction shown.
3. Piling shall be End Bearing HP12x53 with the Design Pile Load of 48 Tons.
4. For Caisson design data and Details, See Dwg. No. B-8.
5. For Bridge Rail (470) Pay limit lengths, work this drawing with Dwg. No. B-34.

TABLE OF WORK POINTS	
1E Sta. 984+22.16	628129.8564 N 178508.9379 E
2E Sta. 985+20.16	628081.2816 N 178423.8908 E
3E Sta. 986+52.16	628000.4964 N 178319.6793 E

	INITIAL	DATE
Designed By	AEG	1-90
Checked By	JHP	1-90
Detailed By	AEG	1-90

Designed By	AEG	2-90
Checked By	JHP	2-90
Quantities By	JHP	2-90
Checked By	AEG	2-90

DESIGNSPEC: ********** USERNAME: ST241F5D5A8F#174#1611SECOND113.90F

DIVISION OF HIGHWAYS
I-25/470 INTERCHANGE
RAMP E FLYOVER
CONSTRUCTION LAYOUT AND CAISSON / PILING LAYOUT

E-470 Engineer 470 Partnership

Designer	A. GRIFFITH	Structure Numbers	F - 17 - JW
Detailer	A. GRIFFITH		
Drawing Number	B-6	of	45 Drawings

AS CONSTRUCTED					
NO REVISIONS		REVISED		VOID	

FEDERAL ROAD REGION NO.	DIVISION	PROJECT NUMBER	SHEET NUMBER
VIII	COLORADO	1A06	117

REVISIONS			
A-1	4-02-90	Dimensions @ Fascia & Note.	JHP
	- -		
	- -		

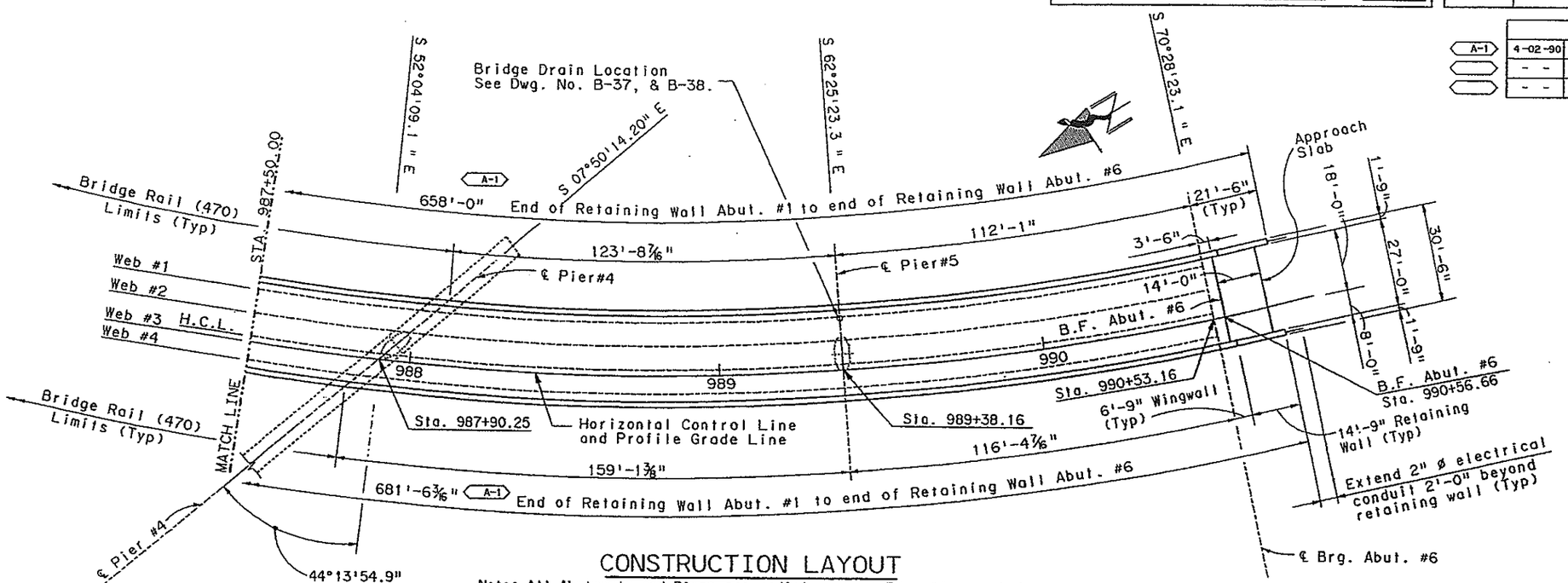

CONSTRUCTION LAYOUT

Note: All Abutments and Piers are radial, except Pier #4 as noted.
2 ø Conduits in both bridge rails not shown for clarity.
See Dwg. No. B-28 for location.

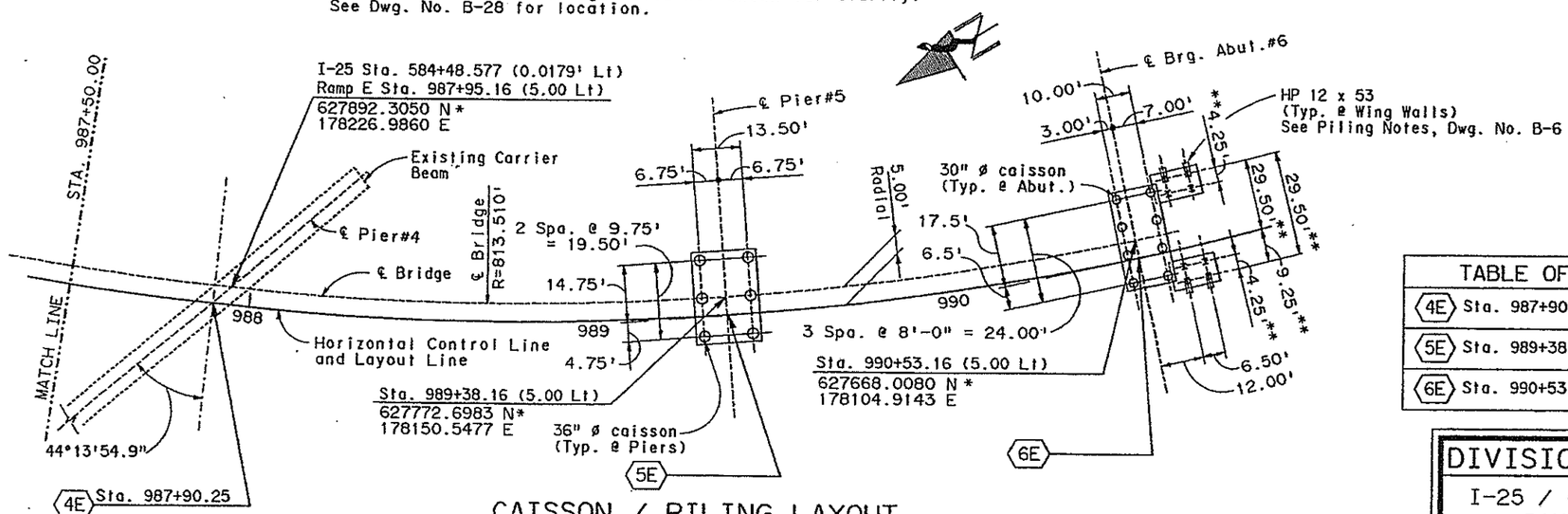

CAISSON / PILING LAYOUT

Note: All Abutments and Piers are radial, except Pier #4 as noted.

A-1 * : Modified State Plane Coordinates for Centeral Region given at Center Columns, Abutments and footings have been adjusted for superelevations.
For Construction sequence, details and notes, See Dwg. No. B-13 & B-31.

** : Dimension given is radial to Horizontal Control Line.

TABLE OF WORK POINTS	
4E Sta. 987+90.25	627899.2385 N 178226.0317 E
5E Sta. 989+38.16	627775.0129 N 178146.1157 E
6E Sta. 990+53.16	627669.6793 N 178100.2018 E

	INITIAL	DATE			
Designed By	AEG	1-90	Checked By	AEG	2-90
Checked By	JHP	1-90	Quantities By	JHP	2-90
Detailed By	AEG	1-90	Checked By	AEG	2-90

of Column and Abutment

E-470
Engineer 470 Partnership

DIVISION OF HIGHWAYS

I-25 / 470 INTERCHANGE
RAMP E FLYOVER
CONSTRUCTION LAYOUT AND
CAISSON / PILING LAYOUT

Designer A. GRIFFITH	Structure Numbers	F - 17 -JW	
Detailer A. GRIFFITH			
Drawing Number B-7	of	45	Drawings

RAMP E-CONSTR.&CAISSON LAYOUT SHT

AS CONSTRUCTED					
NO REVISIONS		REVISED		VOID	

FEDERAL ROAD REGION NO.	DIVISION	PROJECT NUMBER	SHEET NUMBER
VIII	COLORADO	1A06/1802	118

REVISIONS		
- -		
- -		
- -		

CAISSON DATA

CAISSON GROUP	LOCATION	DIMENSIONS					ELEVATIONS			REINFORCEMENT		STANDARD HOOK REQUIRED	DESIGN AXIAL LOAD PER CAISSON	TOTAL NUMBER OF CAISSONS
		"A"	"B"	"C"	"D"	"E"	"F"	"G"	"H"	# OF BARS	SIZE			
I	ABUTMENT #1	30"	18'-0"	2'-0"	2'-8"	12'-0"	5890.75	5884.75	5872.75	10	#10	YES	190 Kips	8
II	PIER #2	36"	15'-0"	4'-6"	4'-6"	15'-0"	5875.50	5875.50	5860.50	12	#9	NO	330 Kips	6
III	PIER #3	36"	15'-0"	4'-6"	4'-6"	15'-0"	5852.50	5852.50	5837.50	12	#9	NO	400 Kips	6
IV	PIER #5	36"	18'-0"	4'-6"	4'-6"	18'-0"	5860.50	5860.50	5842.50	12	#9	NO	410 Kips	6
V	ABUTMENT #6	30"	25'-0"	2'-0"	2'-8"	15'-0"	5894.25	5884.25	5869.25	10	#10	YES	190 Kips	8

(B)

NOTES:

1. For Caisson layout, see Dwg. No. B-6 & B-7.
2. Dimension "A" shown is the outside diameter of the caisson.
3. Dimension "B" shown is based on an estimated top of bedrock elevation "G". If Elevation "G" is higher than elevation "F", then elevation "G" has been recorded as "F".
4. Dimension "C" is the projected length of caisson reinforcing to be extended above top of Caisson, to Bottom layer of Hooks.
5. Dimension "D" is the projected length of caisson reinforcing to be extended above top of caisson, to top layer of Hooks. Hooks shall be placed in layers between "C" and "D" to accomodate geometric constraints of hooked reinforcing near circle center.
6. All reinforcing is non epoxy-coated. (B): indicates non Epoxy-Coated Reinforcing. No substitution unless approved by Engineer.
7. Reinforcing extending above the top of Caisson are included and will not be paid for separately.
8. Top of bedrock elevation shall be verified at the time of construction by the Engineer.
9. Dimension "E" shown is the required minimum penetration in bedrock.
10. Provide a clean roughened surface at top of Caisson.

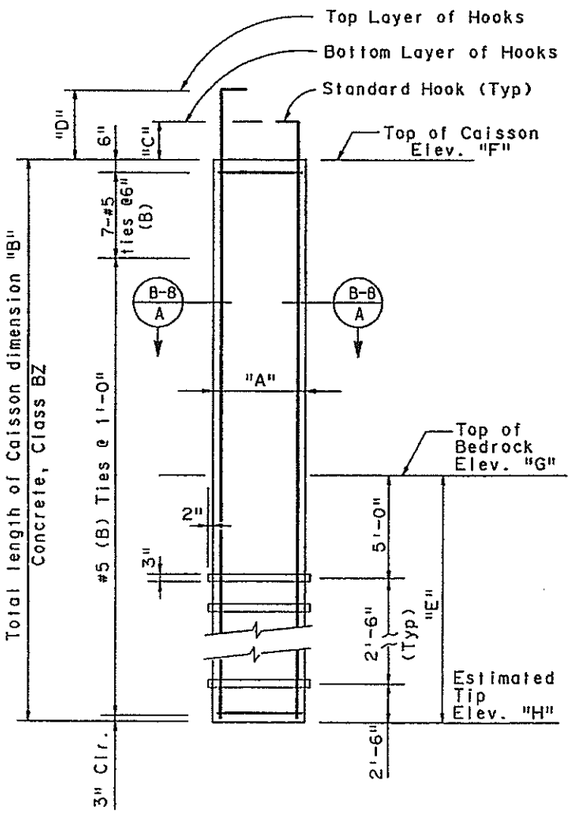

ELEVATION

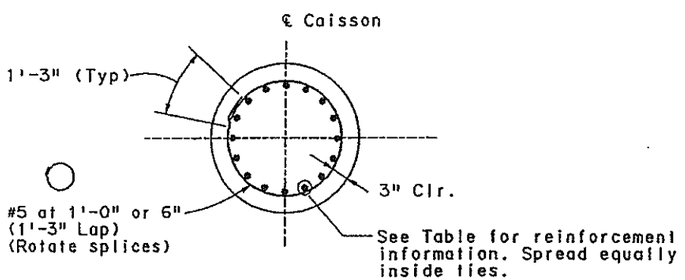

TYPICAL SECTION B-8 A

INITIAL	DATE			
Designed By	AEG	1-90	Checked By	AEG 1-90
Checked By	JHP	1-90	Quantities By	JHP 2-90
Detailed By	GMC	1-90	Checked By	AEG 2-90

USERNAME
S:\24115\DSAE\174116\SECAS0113.90H

E-470
Engineer 470 Partnership

DIVISION OF HIGHWAYS
I-25 / 470 INTERCHANGE
RAMP E FLYOVER
CAISSON DETAILS

Designer A. Griffith	Structure Numbers	F - 17 - JW
Detailer G.Christnacht		
Drawing Number B-8	of 45	Drawings

CAISSON DETAILS
SECAS0113.90H

AS CONSTRUCTED						
NO REVISIONS		REVISED		VOID		

FEDERAL ROAD REGION NO.	DIVISION	PROJECT NUMBER	SHEET NUMBER
VIII	COLORADO	1A06	119

REVISIONS		
4-02-90	Elevations & Details at Overhang	AEG
- -		
- -		

INITIAL	DATE		
Designed By	AEG	1-90	
Checked By	DBW	1-90	
Detailed By	GMC	1-90	
Drawn By	AEG	1-90	
Checked By	DBW	1-90	
Quantities By	JHP	2-90	
Checked By	DBW	2-90	

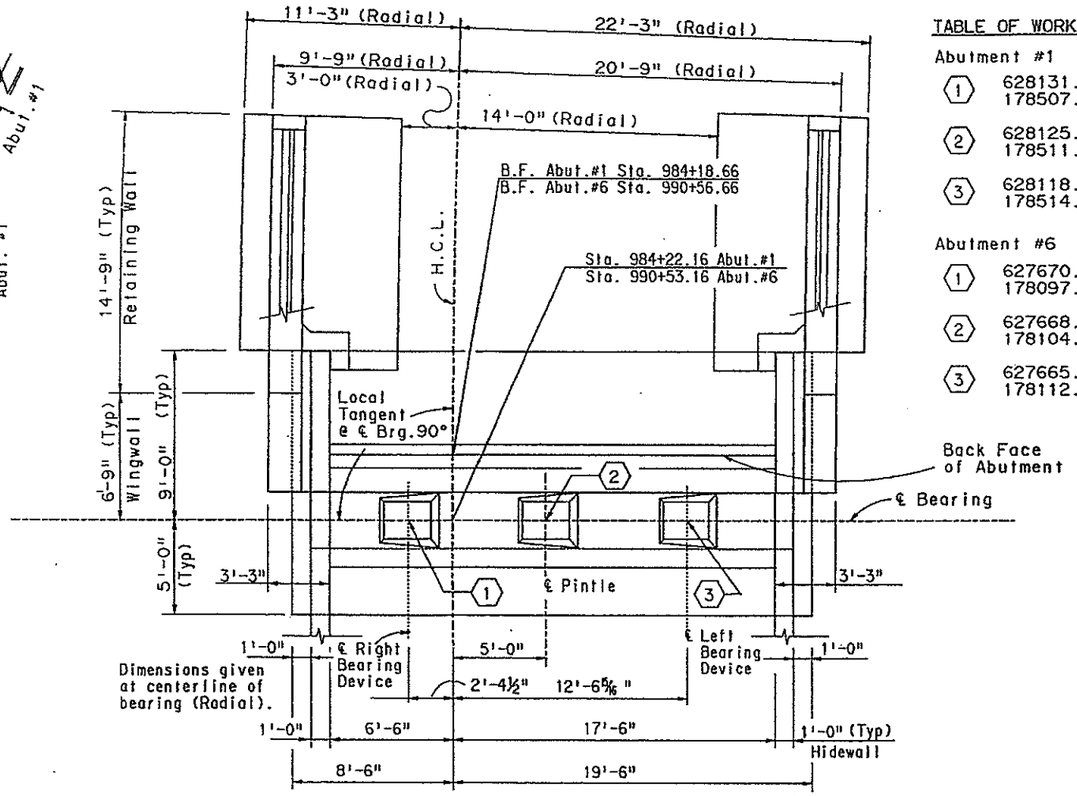

ABUTMENT #1 PLAN

Note: Abutment #1 Shown, Abutment #6 opposite Hand.
For Bearing Seat Details, see Partial Plan & Elev. Dwg. No. B-11.

TABLE OF WORK POINTS

Abutment #1

①	628131.9883 N	178507.8841 E
②	628125.3750 N	178511.1531 E
③	628118.5827 N	178514.5106 E

Abutment #6

①	627670.4738 N	178097.9615 E
②	627668.0080 N	178104.9143 E
③	627665.4754 N	178112.0554 E

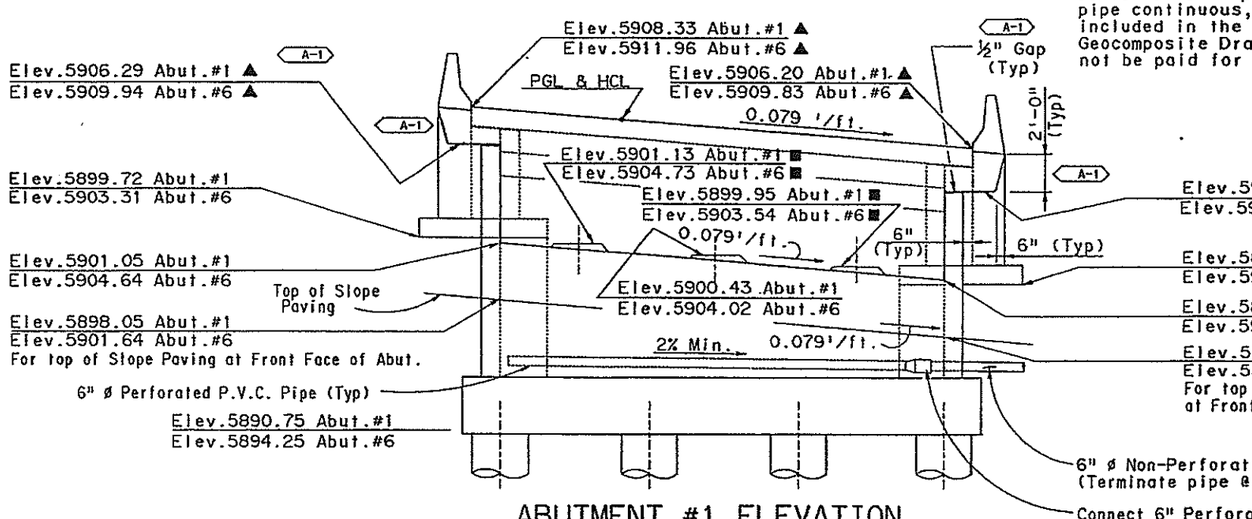

ABUTMENT #1 ELEVATION

Looking Back Station

▲ Elevations are Back Face of Abutment.
Note: Abutment #1 Shown, Abutment #6 opposite Hand.

■ Elevations shall be adjusted to suit the bearings used.

Center of 6" ø perforated pipe continuous, to be included in the cost of the Geocomposite Drain and shall not be paid for seperatly.

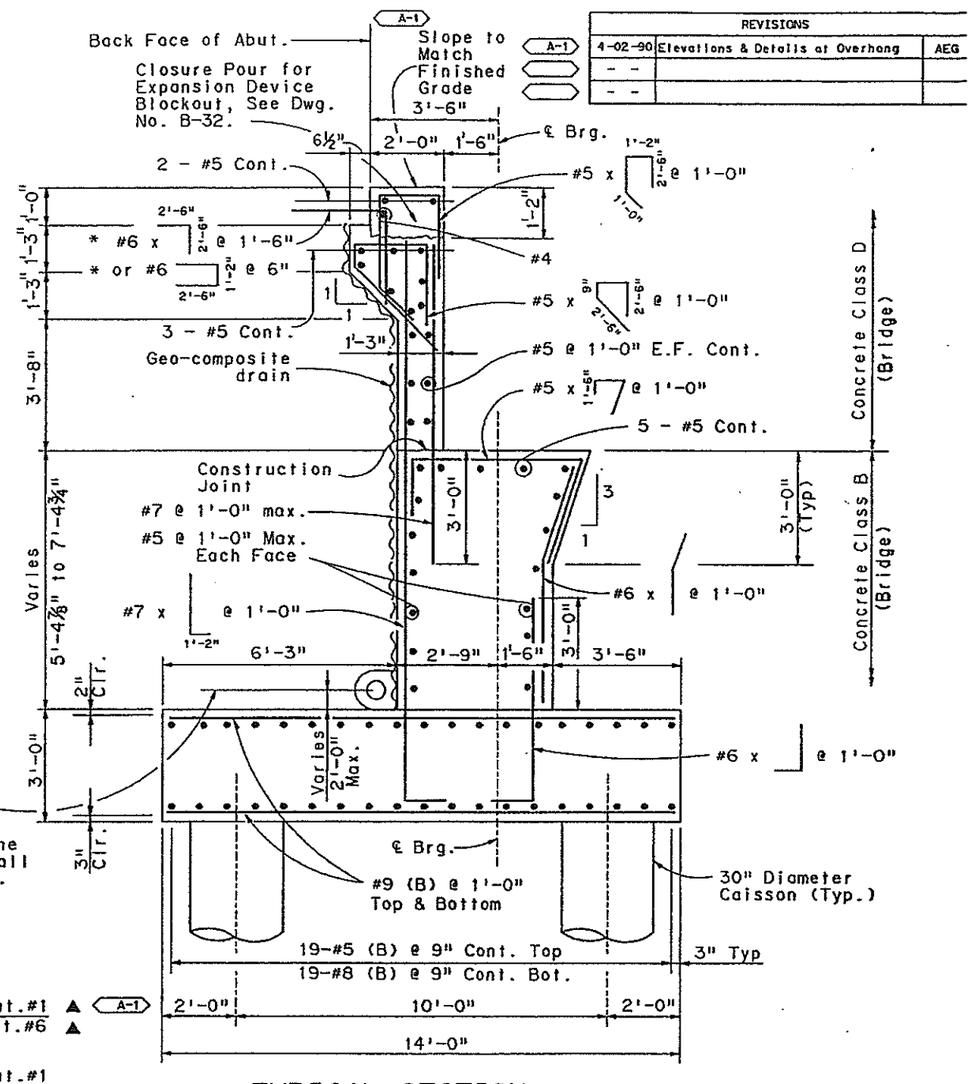

TYPICAL SECTION

* Note: For Reinforcing extending into approach slab see Detail Dwg. No. B-40.

DIVISION OF HIGHWAYS

I-25 / 470 INTERCHANGE
RAMP E FLYOVER
ABUTMENT #1 AND #6 PLAN, ELEVATION AND SECTION

Designer A. Griffith		Structure Numbers	F - 17 - JW
Detailer G.Christnacht			
Drawing Number	8-9	of	45 Drawings

E-470
Engineer 470 Partnership

ABUTMENT #1 PLAN AND ELEVATIO

11-JAN-90 09:10:47
USERNAME
S:\241\SDGN\SPEC\ABE\1741761\SEABT0113.90J

AS CONSTRUCTED					
NO REVISIONS		REVISED		VOID	

FEDERAL ROAD REGION NO.	DIVISION	PROJECT NUMBER	SHEET NUMBER
VIII	COLORADO	1A06	120

REVISIONS		
A-1	4-02-90	Details for Section "A"

TABLE OF ELEVATIONS

LOCATION	ABUT. #1	ABUT. #1
ELEV. A (LEFT)	5905.88	5909.53
ELEV. A (RIGHT)	5908.29	5911.94
ELEV. B (LEFT)	5905.78	5909.63
ELEV. B (RIGHT)	5908.19	5912.04

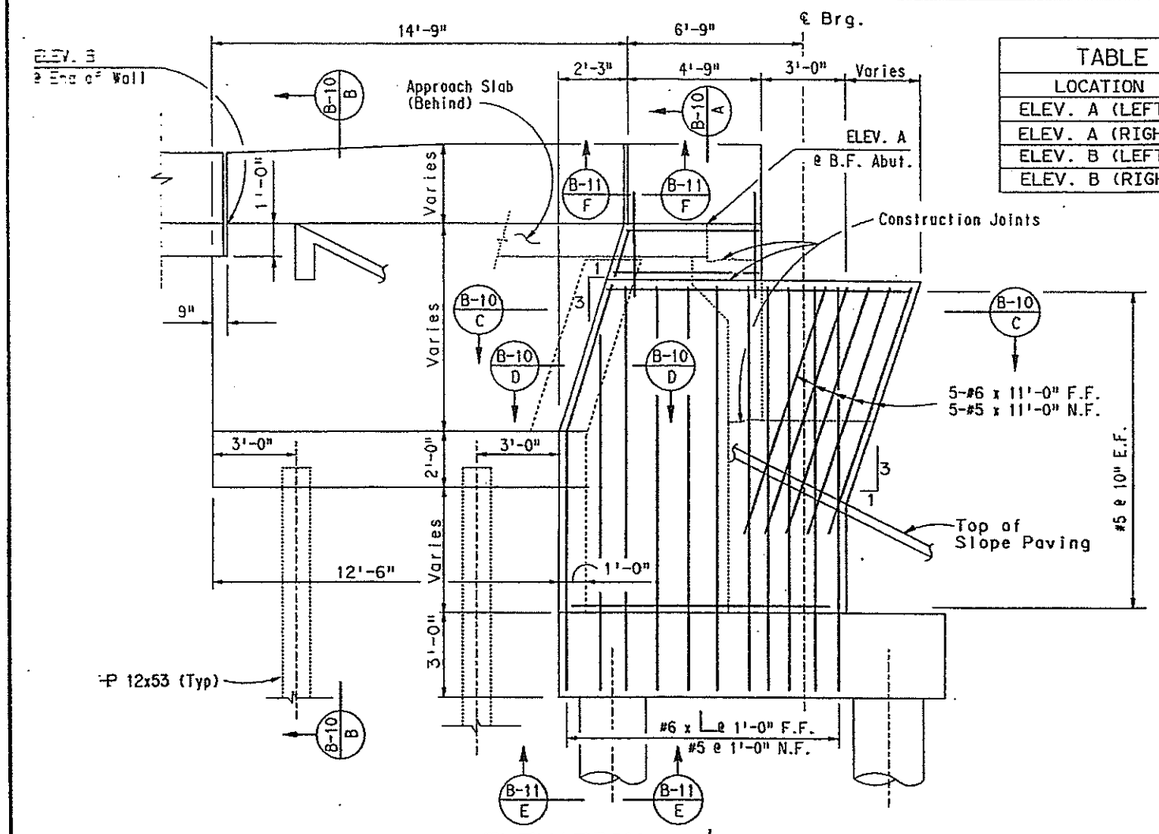

ELEVATION

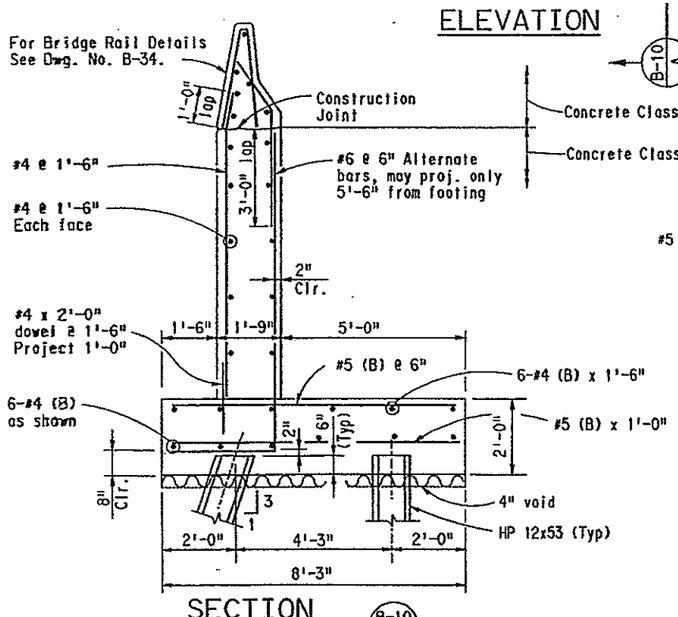

SECTION B-10 B

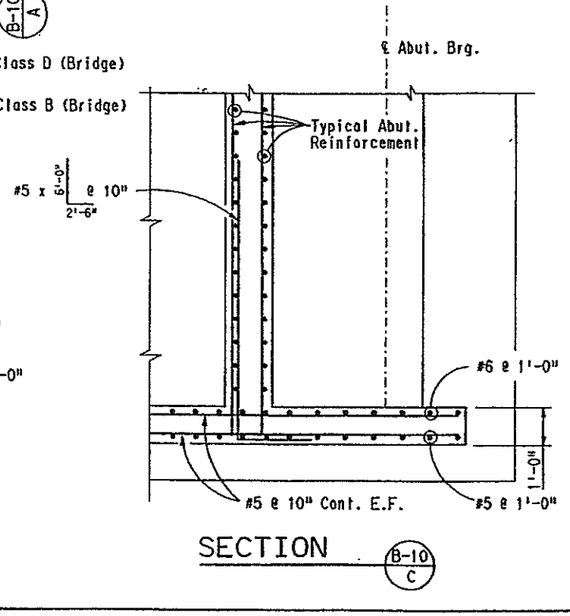

SECTION B-10 C

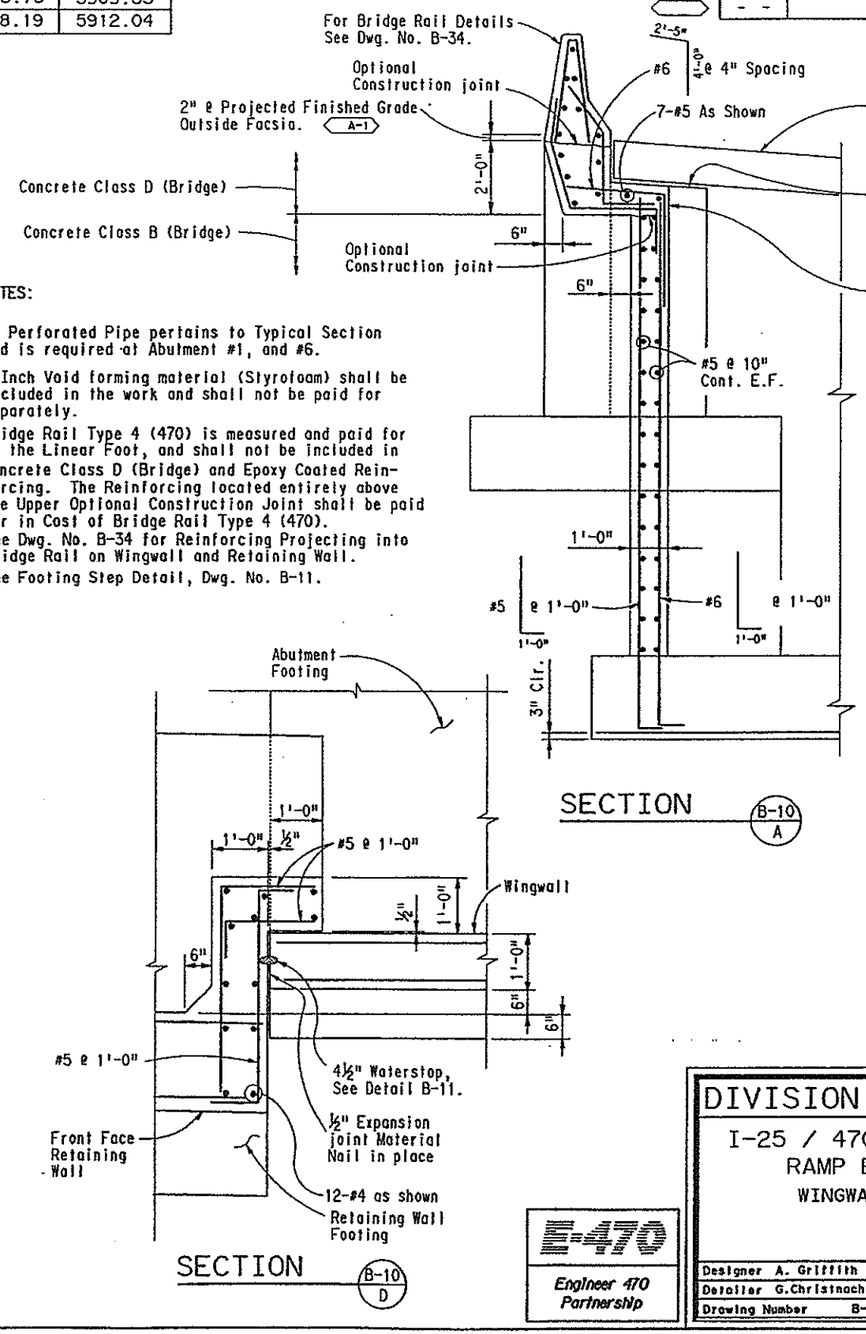

SECTION B-10 A

NOTES:

1. 6" Perforated Pipe pertains to Typical Section and is required at Abutment #1, and #6.
2. 4 Inch Void forming material (Styrofoam) shall be included in the work and shall not be paid for separately.
3. Bridge Rail Type 4 (470) is measured and paid for by the Linear Foot, and shall not be included in Concrete Class D (Bridge) and Epoxy Coated Reinforcing. The Reinforcing located entirely above the Upper Optional Construction Joint shall be paid for in Cost of Bridge Rail Type 4 (470). See Dwg. No. B-34 for Reinforcing Projecting into Bridge Rail on Wingwall and Retaining Wall.
4. See Footing Step Detail, Dwg. No. B-11.

SECTION B-10 D

INITIAL	DATE		Checked By	ALG	2-90
AEG	12-89		DBW	2-90	
AEG	1-90	Quantities By	JHP	2-90	
DBW	12-89	Checked By	DBW	2-90	
GMC	12-89				

Designed By
Checked By
Detailed By

SUBMITTED
AS CONSTRUCTED
REVISED

DIVISION OF HIGHWAYS

I-25 / 470 INTERCHANGE
RAMP E FLYOVER
WINGWALL DETAILS

E-470
Engineer 470 Partnership

Designer	A. Griffith	Structure Numbers	F - 17 - J8
Detailer	G.Christnacht		
Drawing Number	B-10	of	45 Drawings

WINGWALL DETAIL
SEWW 0113.06

AS CONSTRUCTED					
NO REVISIONS		REVISED		VOID	

FEDERAL ROAD REGION NO.	DIVISION	PROJECT NUMBER	SHEET NUMBER
VIII	COLORADO	1A06	121

REVISIONS			
A-1	4-02-90	Detail for Section "F"	AEG
	- -		
	- -		

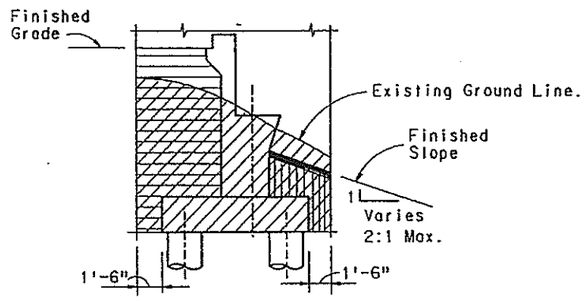

LIMIT OF QUANTITIES FOR ABUTMENTS

Note: 1'-6" Dimension for Excavation is Similar for Wingwall, Retaining Walls and Piers.

Class 2 Backfill required in front of Abutments and beneath Slope Paving.

Class 2 Backfill required at Piers #2, #3 & #5.

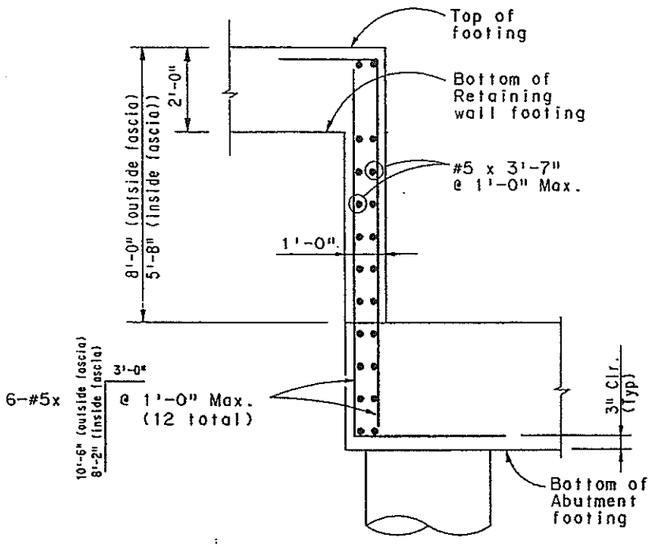

SECTION
Typical footing Step (B-10 / E)

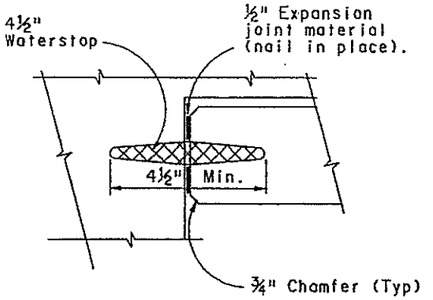

WATERSTOP DETAIL

The 4½" Waterstop shall not be paid for Seperately, but to be included in the work. (Approximately 35 Linear feet total)

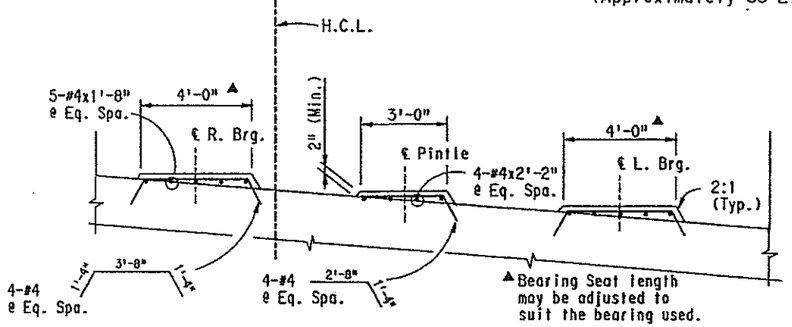

PARTIAL ELEVATION BEARING SEATS

Abutment #1 shown, Abutment #6 similar, opposite hand.

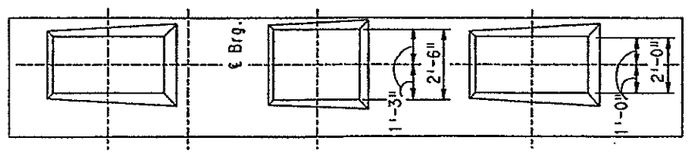

PARTIAL PLAN BEARING SEATS

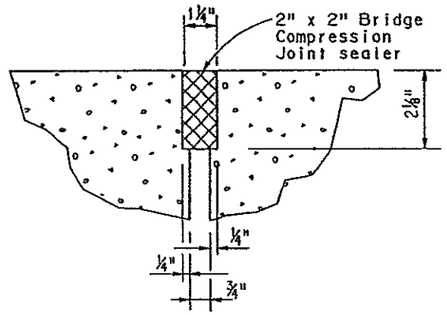

SECTION
Typical footing Step (B-11 / G)

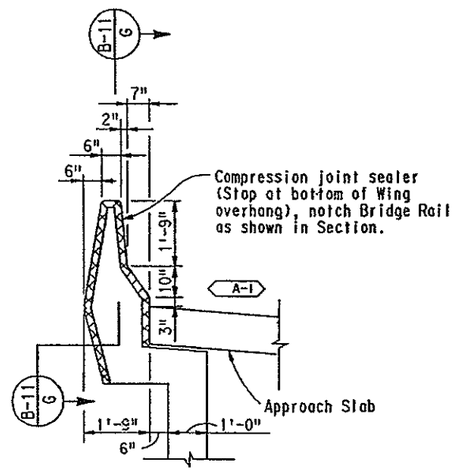

VIEW AT END OF WING (B-10 / F)

	INITIAL	DATE
Designed By	AEG	12-89
Checked By	DBW	1-90
Detailed By	GMC	12-89

Checked By	AEG	2-90
Quantities By	JHP	2-90
Checked By	JHP	2-90
	AEG	2-90

E-470
Engineer 470 Partnership

DIVISION OF HIGHWAYS

I-25 / 470 INTERCHANGE
RAMP E FLYOVER
MISCELLANEOUS ABUTMENT & WINGWALL DETAILS

Designer A. Griffith	Structure Numbers	F - 17 - JW
Detailer G.Christnacht		
Drawing Number B-11 of 45 Drawings		

MISC. ABUT. & WINGWALL DETAIL

USERNAME=
S:\A11\ROADWAY\274161\SE\WWL01B.DGN

AS CONSTRUCTED			
NO REVISIONS		REVISED	VOID

FEDERAL ROAD REGION NO.	DIVISION	PROJECT NUMBER	SHEET NUMBER
VIII	COLORADO	1A06	122

REVISIONS			
A-1	4-02-90	Cap Dimensions, Elev. & Reinforcing	JHP
	- -		
	- -		

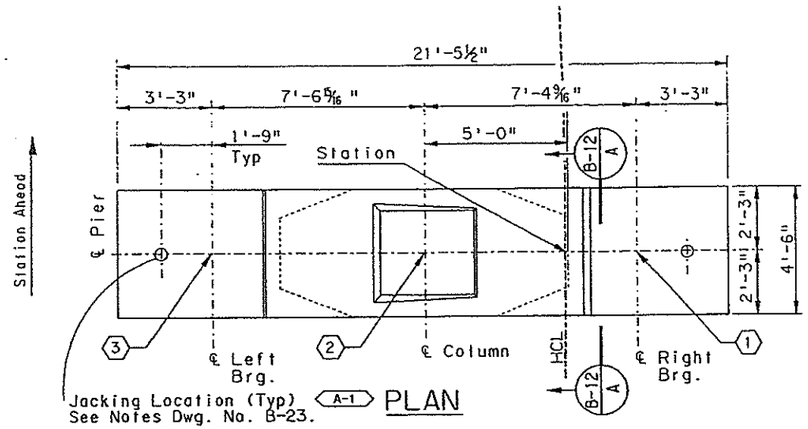

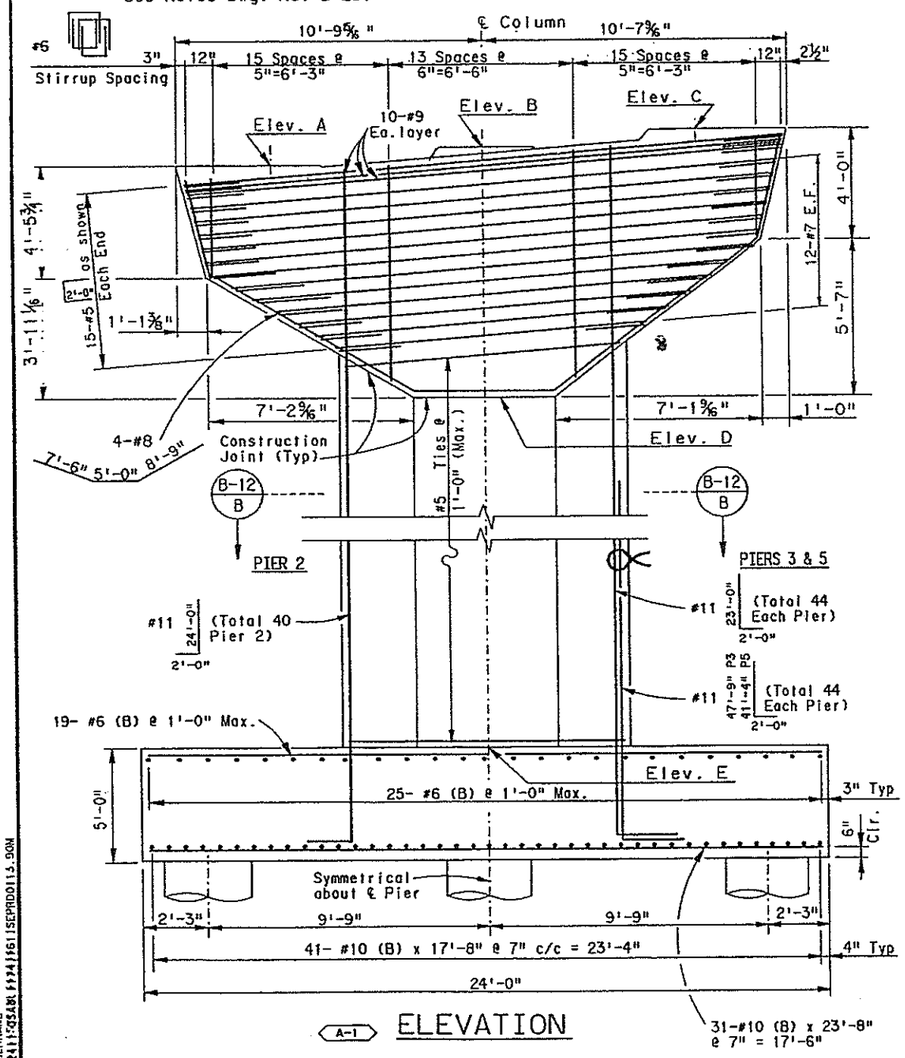

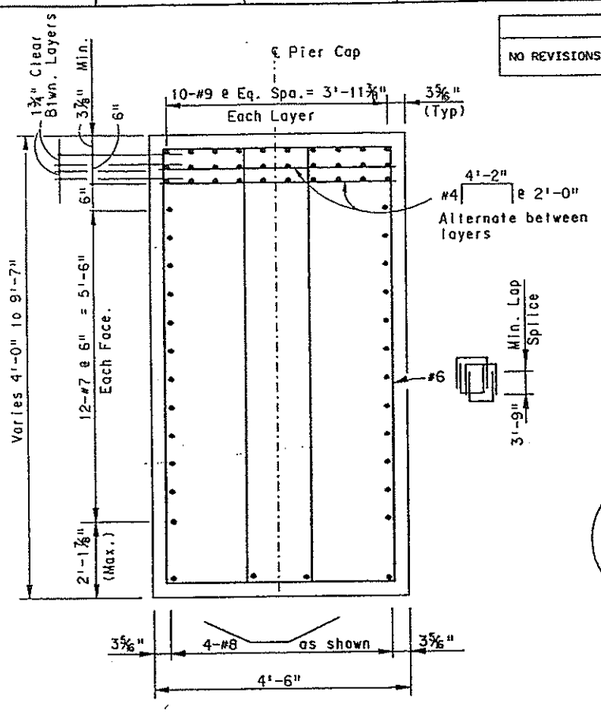

NOTES:

1. See Dwg. No. B-14 for Built-up Concrete Bearing Seat Details.
2. See Dwg. Nos. B-35 and B-36 for Bearing Device Details.
3. Bearing seat and Pier Cap reinforcing shall be adjusted to avoid interference with Bearing anchor bolts.
4. Place end stirrups parallel with the Pier Cap ends.

℄ :Indicates bundled bars.

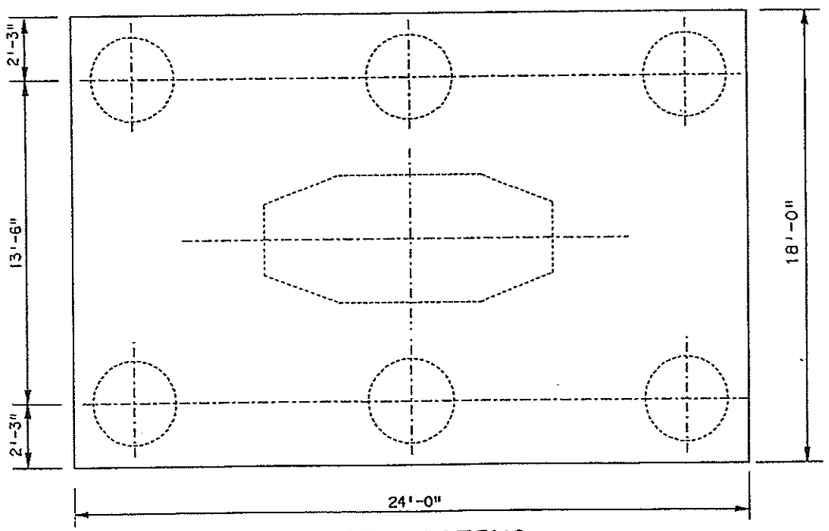

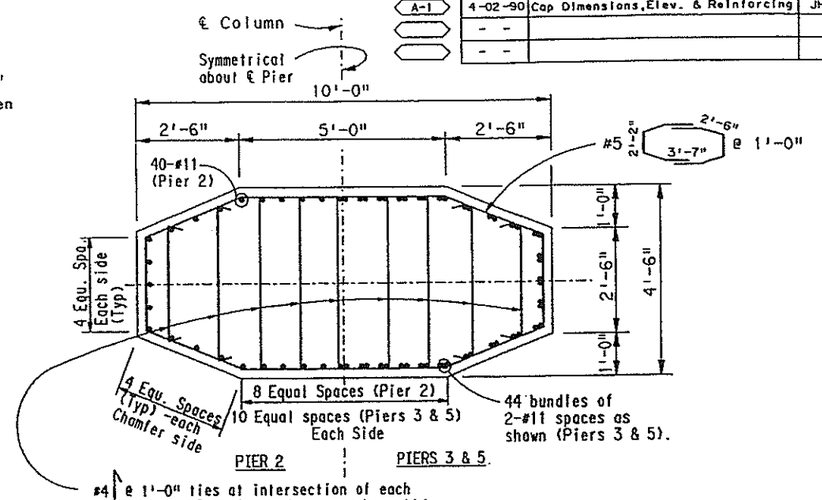

COORDINATE TABLE

		N	E
Pier 2	①	628083.2721	178422.5902
	②	628077.0966	178426.6256
	③	628070.7538	178430.7703
Pier 3	①	628002.2520	178318.0762
	②	627996.8045	178323.0508
	③	627991.2096	178328.1602
Pier 5	①	627776.1134	178144.0086
	②	627772.6983	178150.5477
	③	627769.1907	178157.2637

A-1	Pier 2	Pier 3	Pier 5
Station	985+20.16	986+52.16	989+38.16
▲ Elev. A	5900.264	5901.136	5902.728
Elev. B	5900.983	5901.691	5903.263
▲ Elev. C	5901.446	5902.318	5903.911
Elev. D	5891.863	5892.735	5894.328
Elev. E	5880.50	5857.50	5865.50

▲ Bearing Seat Elevations shall be Adjusted to fit actual Bearing used.

INITIAL	DATE	
Designed By JHP	1-90	Checked By JHP 3-90
Checked By DBW	1-90	Quantities By JHP 3-90
Detailed By GMC	1-90	Checked By AEG 3-90

DIVISION OF HIGHWAYS

E-470/I-25 INTERCHANGE
RAMP "E" FLYOVER
PIERS #2, #3 AND #5
DETAIL SHEET

Designer J. Peck		Structure Numbers	F - 17 - JN
Detailer G.Christnacht			
Drawing Number 8-12	of 45	Drawings	

E-470
Engineer 470 Partnership

RAMP E - PIER DETAIL SHEET

SEPRD0113.90

$$$$DGNSPEC$$$$$$$$$$$$$$$
USERNAME
ST241:425A81 ####1961SEPRD0113.DGN

AS CONSTRUCTED					
NO REVISIONS		REVISED		VOID	

FEDERAL ROAD REGION NO.	DIVISION	PROJECT NUMBER	SHEET NUMBER
VIII	COLORADO	1A06/1802	123

REVISIONS			
- -			
- -			
- -			

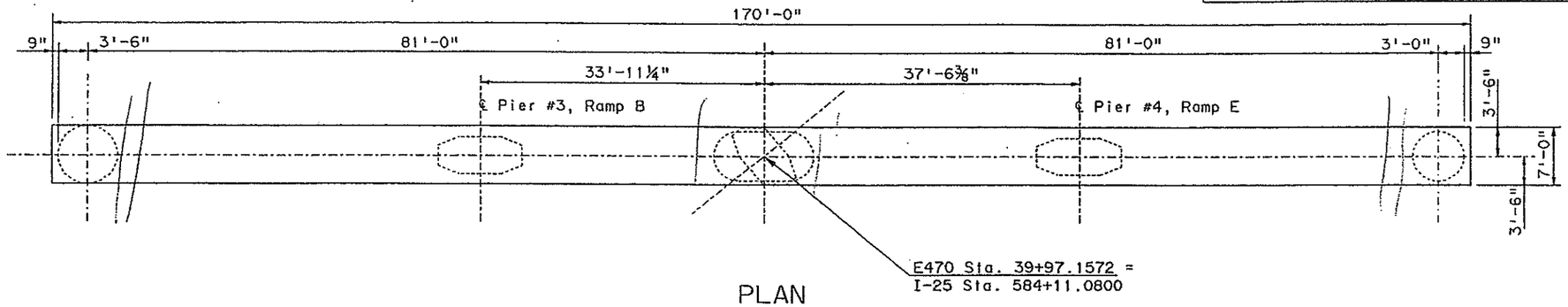

PLAN

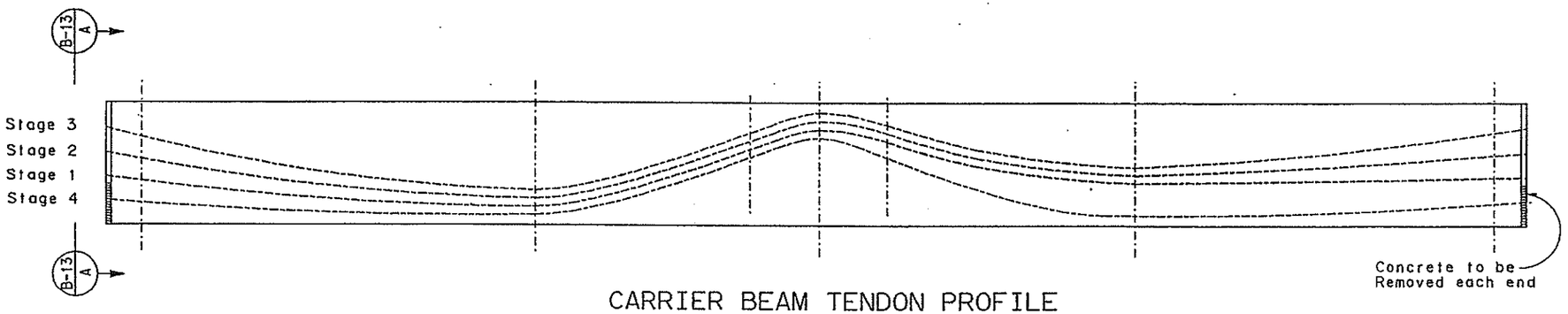

CARRIER BEAM TENDON PROFILE

TENDON TABLE

	34.5' North of ℄ Middle Caisson		℄ Middle Caisson		38.57' South of ℄ Middle Caisson	
	F_f	A	F_f	A	F_f	A
STAGE 4	511.0 k	5.5"	632.5 k	77.75"	735.5 k	5.5"

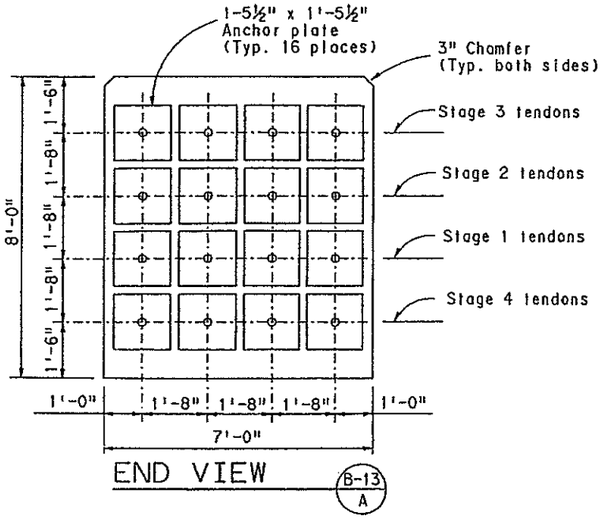

END VIEW B-13 A

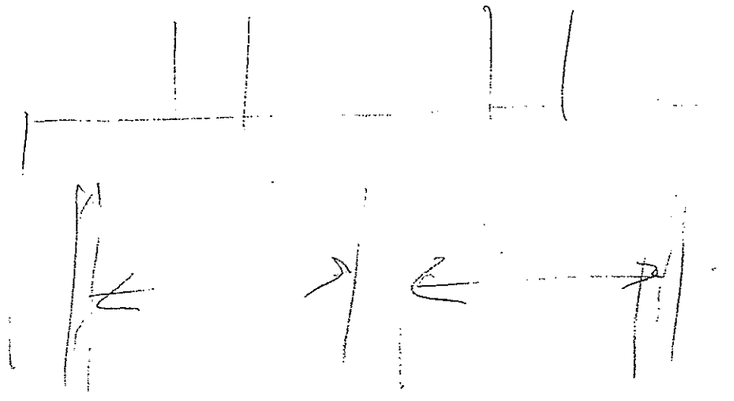

CONSTRUCTION SEQUENCE:

1. Remove concrete cover cap from top of the Carrier Beam. Clean exposed #11 Reinforcing steel. Use approved mechanical coupler or fusion process to splice new #11 column bars to the existing bars.
2. Apply new epoxy coating to areas where the epoxy coating was damaged during the splicing process.
3. Construct Pier 4 column and cap. Concrete to be poured at night.
4. Install and stress two interior 31-½" ø strand tendons adjacent to Carrier Beam centerline.
5. Erect steel box girders, form and pour concrete deck.
6. Install and stress two exterior 31-½" ø strand tendons.
7. Complete Ramp E construction.

PRESTRESSING NOTES:

1. The jacking force, F_j shall be 948 kips per tendon. $F_j = 0.74 \times f'_s \times A_{ps}$ includes friction losses based on $\mu = 0.25$ and k= 0.0002 plus long term-losses of 36,000 psi.
2. No more than one tendon shall be tensioned eccentrically about the Carrier Beam vertical centerline.
3. All grout vents and drain tubes for Stage 4 post-tensioning ducts shall be open and clear of obstructions. Tendons shall not be grouted until all 4 tendons are installed and stressed. Ramps B and C shall be closed to traffic for 24 hours during and following grouting.
4. Dimension A is measured from the Carrier Beam soffit to the post-tensioning steel center of gravity.

INITIAL	DATE
Designed By JHP	1-90
Checked By DKB	3-90
Detailed By GMC	1-90

Checked By	JHP	3-90
	DBW	2-90
Quantities By	JHP	3-90
Checked By	DBW	2-90

\\\\IDGNSPEC\\\\\\\\\\\\\\\\
USERNAME
SY\24+505\A3E\1747761\SEPRD0313.90M

DIVISION OF HIGHWAYS

I-25 / 470 INTERCHANGE
RAMP E FLYOVER
CARRIER BEAM DETAILS
AT PIER #4

Designer J. PECK	Structure Numbers	F - 17 - JW
Detailer G.CHRISTNACHT		
Drawing Number B-13	of 45	Drawings

E-470
Engineer 470 Partnership

AS CONSTRUCTED					
NO REVISIONS		REVISED		VOID	

FEDERAL ROAD REGION NO.	DIVISION	PROJECT NUMBER	SHEET NUMBER
VIII	COLORADO	1A06	124

	REVISIONS		
A-1	4-02-90	Dimen. & Rebar for Cap & Brg. Seat	JHP
A-2	4-09-90	Elev. View Rebar in Cap	JHP
	- -		

Angle	Value
θ_L	44°53'21.9"
θ_{HCL}	45°46'05.1"
θ_R	45°55'40.1"

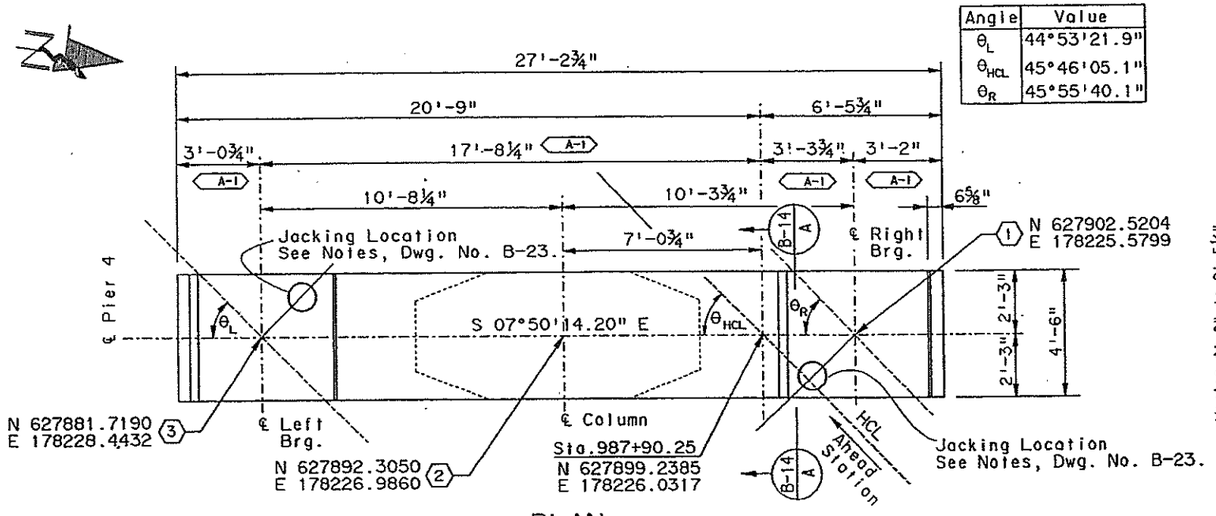

PLAN

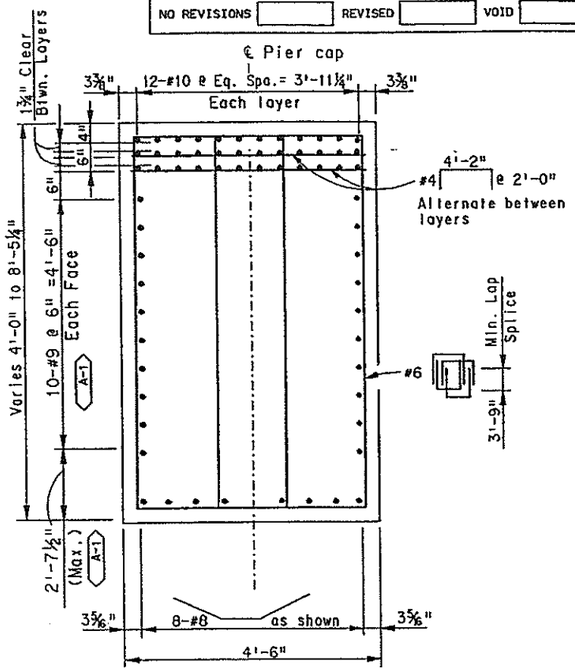

SECTION B-14 A

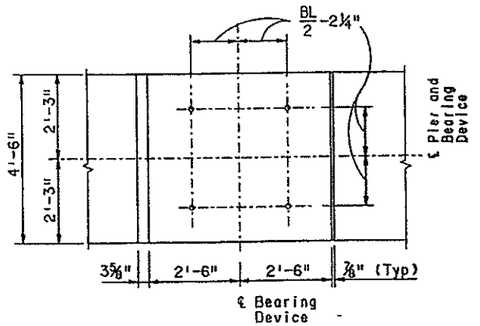

PLAN

Note: For dimension "BL", see Dwg. Nos. B-35 & B-36.

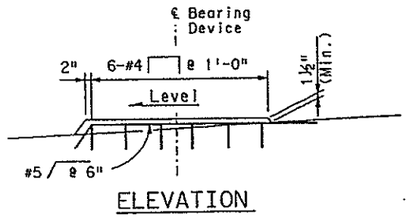

ELEVATION

BUILT-UP CONCRETE BEARING SEAT

For additional details of Bearing Device See Details, Dwg. No. B-35 & B-36.

Notes:

1. Remove concrete cover cap from top of carrier beam. Clean exposed #11 reinforcing steel. Use approved mechanical coupler or fusion process to splice new column bars to the existing bars.
2. Apply new epoxy coating to areas where epoxy coating was damaged in the splicing process.

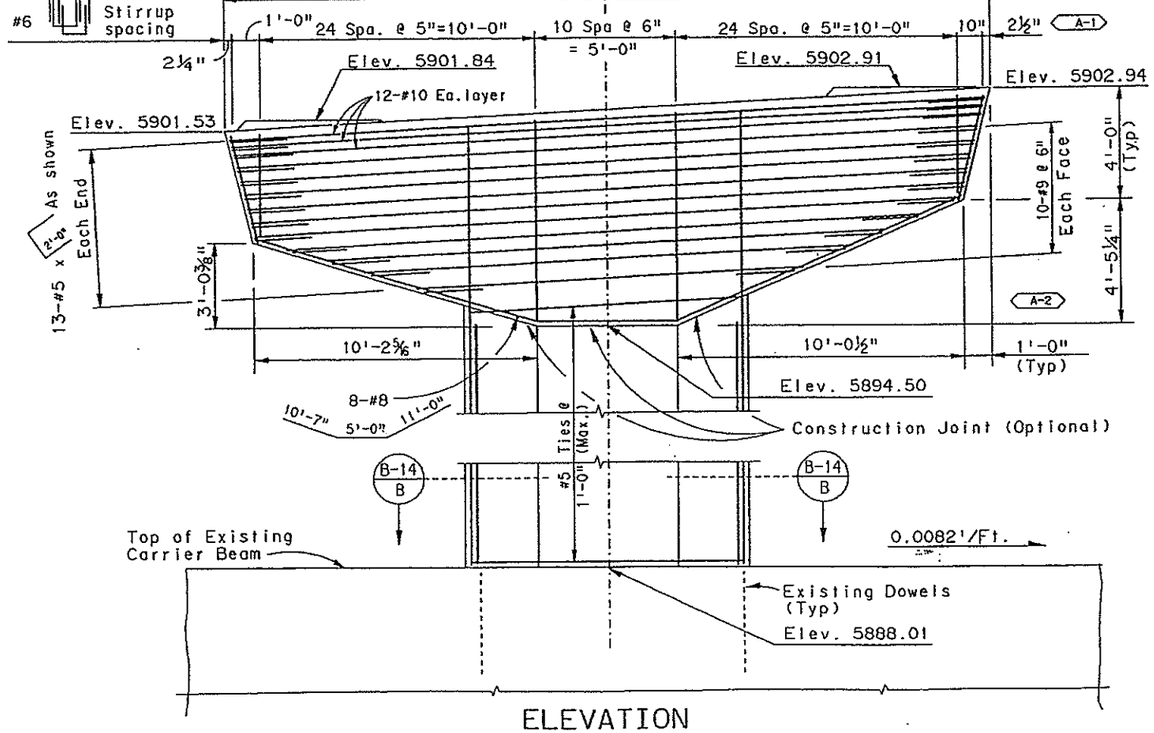

ELEVATION

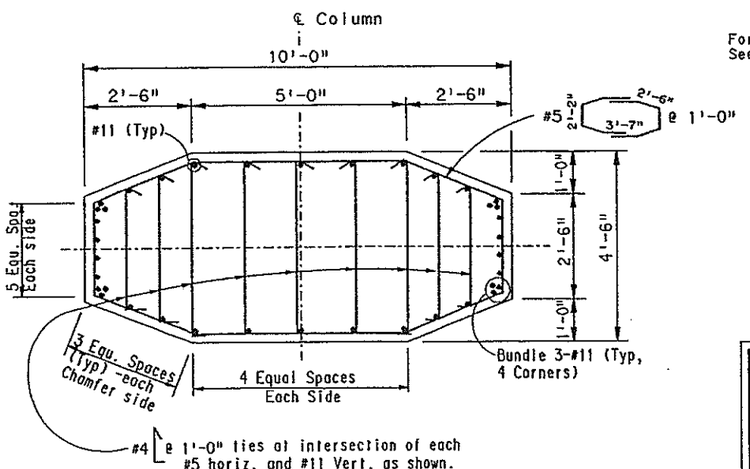

SECTION B-14 B

	INITIAL	DATE	
Designed By	JHP	1-90	Checked By
Checked By	DBM	1-90	Quantities By
Detailed By	GMC	1-90	Checked By
Quantities By	JHP	3-90	
Checked By	AEG	3-90	
Detailed By	DBM	3-90	

\\\\\DGNSPEC\\\\\\\\\\\\\\\\\
USERNAME
S124115C5A3CE5741161\SEPRD0213.90M

E-470
Engineer 470 Partnership

DIVISION OF HIGHWAYS

E-470/I-25 INTERCHANGE
RAMP "E" FLYOVER
PIER #4
DETAIL SHEET

Designer J. Peck	Structure Numbers	F - 17 - JW
Detailer G.Christinacht		
Drawing Number B-14	of 45	Drawings

AS CONSTRUCTED					
NO REVISIONS		REVISED		VOID	

FEDERAL ROAD REGION NO.	DIVISION	PROJECT NUMBER	SHEET NUMBER
VIII	COLORADO	1A06/1802	125

REVISIONS		
- -		
- -		
- -		

INITIAL	DATE
Designed By AEG	1-90
Checked By DBW	3-90
Detailed By AEG	1-90
Checked By AEG	2-90
Quantities By JHP	3-90
Checked By JHP	2-90

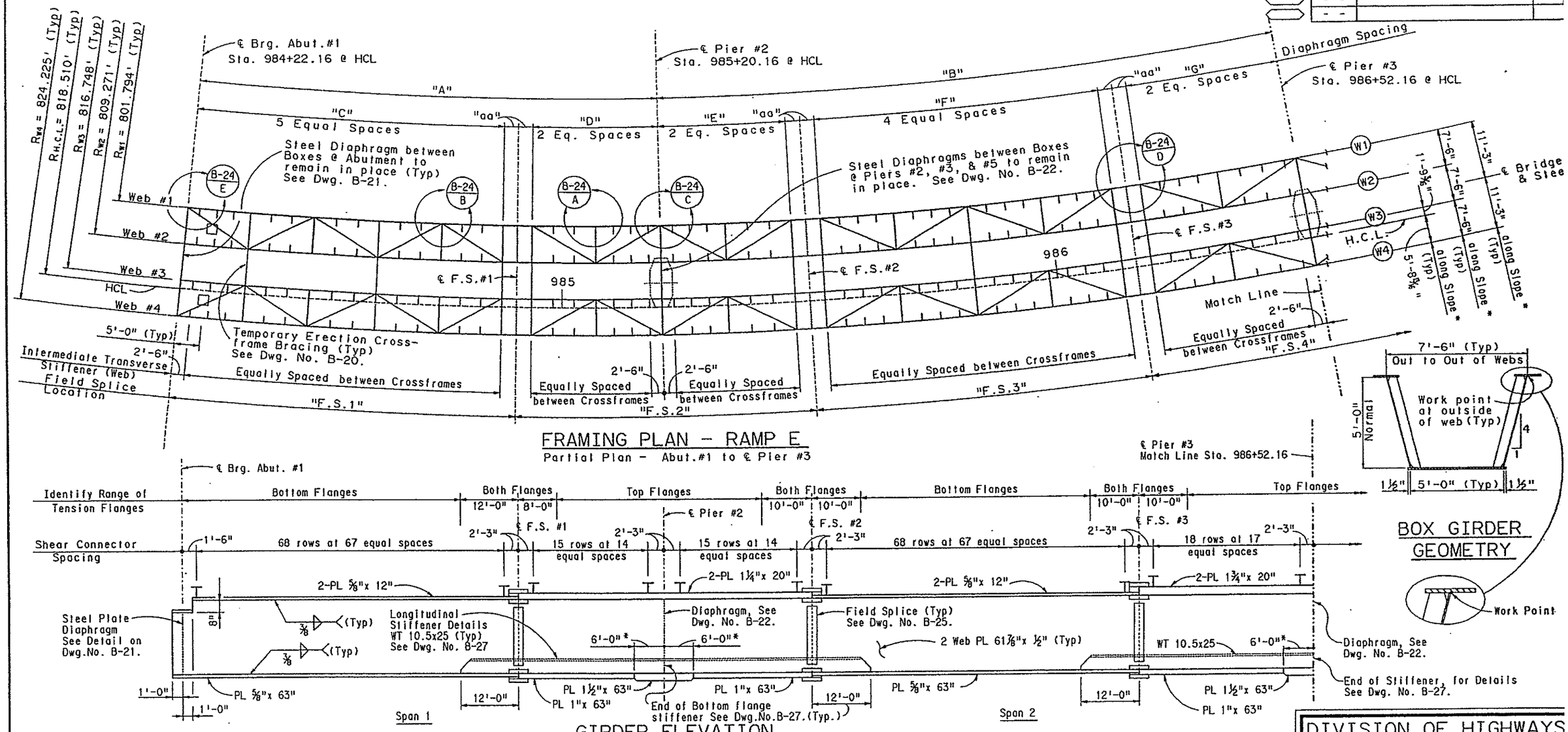

FRAMING PLAN - RAMP E

Partial Plan - Abut.#1 to ℄ Pier #3

GIRDER ELEVATION

Partial Elev. - Abut.#1 to ℄ Pier #3

GIRDER DIMENSION SCHEDULE

DIMENSION	"A"	"B"	"C"	"D"	"E"	"F"	"G"	"aa"	"F.S.1"	"F.S.2"	"F.S.3"	"F.S.4"
WEB #1	96'-0"	129'-3⅝"	64'-0"	26'-0"	26'-0"	59'-3⅝"	32'-0"	3'-0"	67'-0"	58'-0"	65'-3⅝"	68'-0⅞"
WEB #2	96'-10⅝"	130'-6 "	64'-7⅛"	26'-2⅞"	26'-2⅞"	59'-10⅝"	32'-3⅜"	3'-0⅝"	67'-7⅞"	58'-6⅜"	65'-10⅝"	68'-8⅞"
WEB #3	97'-9⅞"	131'-8⅝"	65'-2¼"	26'-5⅛"	26'-5⅛"	60'-4⅝"	32'-7⅛"	3'-0⅛"	68'-2⅝"	59'-1"	66'-6⅝"	69'-4⅛"
HCL & PGL	98'-0"	132'-0"	-	-	-	-	-	-	68'-4¾"	59'-2½"	66'-8"	69'-5⅝"
WEB #4	98'-8¼"	132'-11⅛"	65'-9½"	26'-8¾"	26'-8¾"	60'-11⅝"	32'-10¾"	3'-1"	68'-10½"	59'-7½"	67'-1⅜"	69'-11¾"

Note: All dimensions in table are at Top Outside of Webs.

Note: For framing plan notes See Dwg. No. B-16.
* 6'-0" Dimension shown is measured along ℄ of Bottom Flange from ℄ of Bearing at ℄ of Botom Flange.

E-470
Engineer 470 Partnership

DIVISION OF HIGHWAYS

I-25 / 470 INTERCHANGE
RAMP E FLYOVER
FRAMING PLAN AND GIRDER ELEVATION

Designer A. GRIFFITH	Structure Numbers	F - 17 - JW
Detailer A. GRIFFITH		
Drawing Number B-15	of 45	Drawings

RAMP E-FRAMING PLAN & ELEV SHT

SEFRM0113.9C

$$$$USGNSPEC1111111111111111
USERNAME
S124115DSAME$$1241$$61SEFRM0113.900

AS CONSTRUCTED					
NO REVISIONS		REVISED		VOID	

FEDERAL ROAD REGION NO.	DIVISION	PROJECT NUMBER	SHEET NUMBER
VIII	COLORADO	1A06/1802	126

REVISIONS		
- -		
- -		
- -		

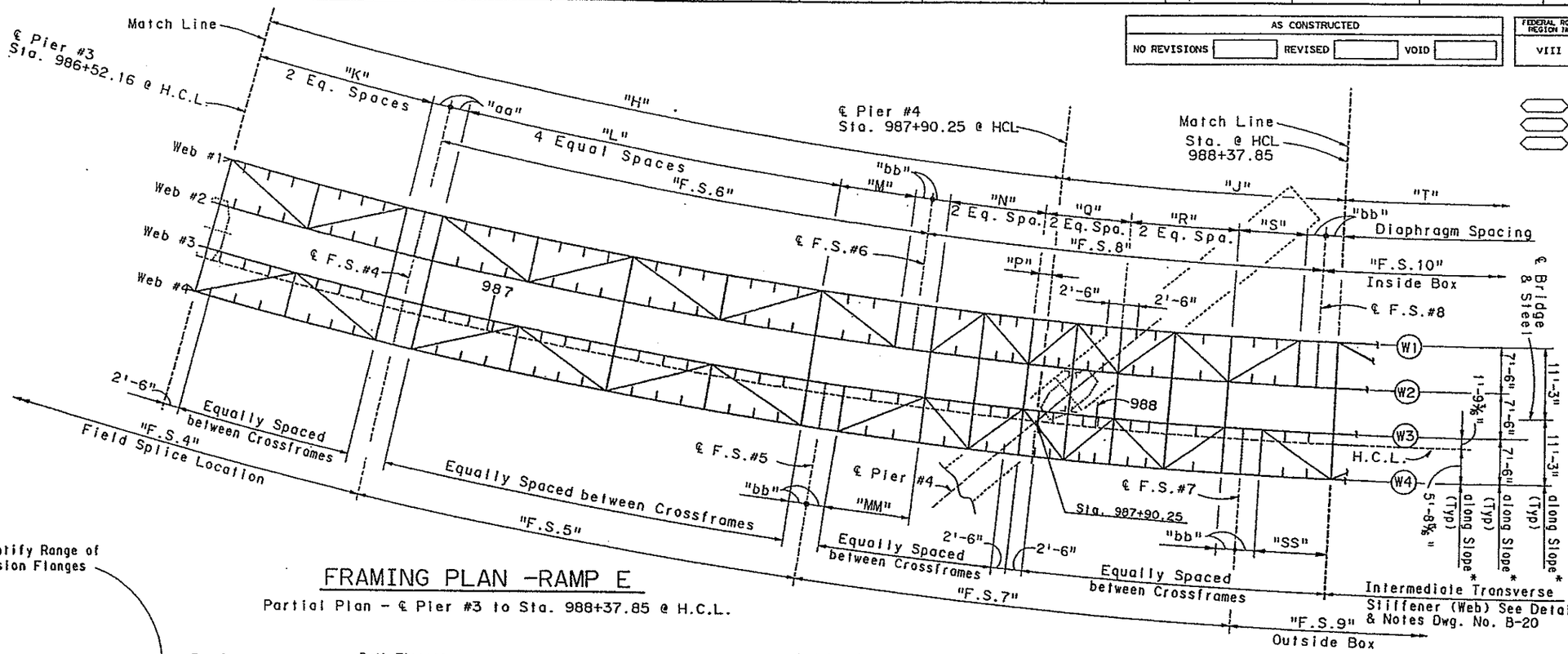

FRAMING PLAN -RAMP E

Partial Plan - ℄ Pier #3 to Sta. 988+37.85 @ H.C.L.

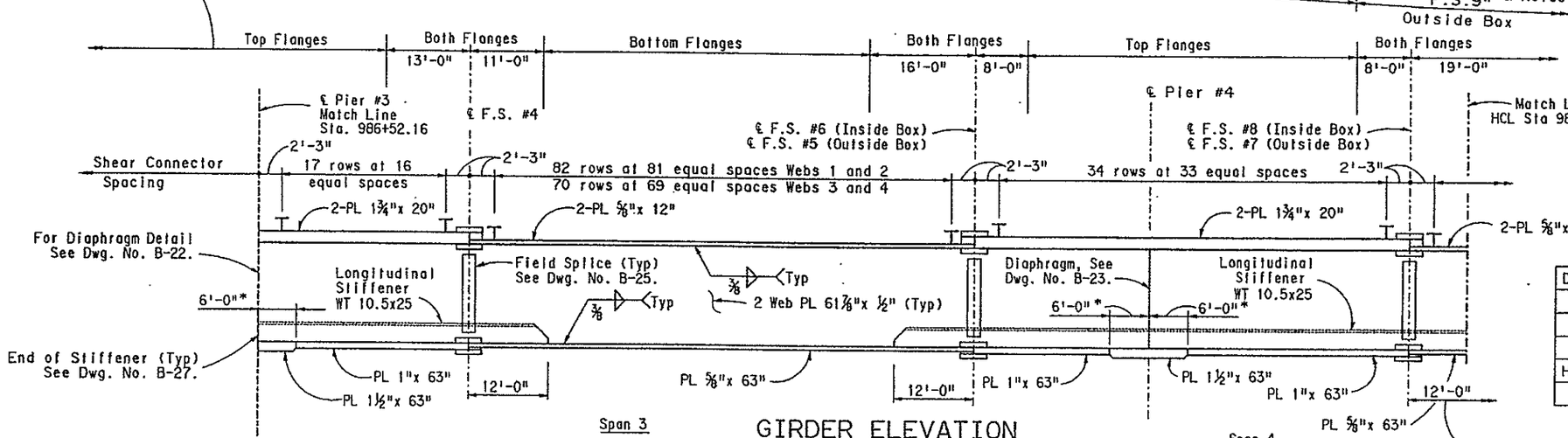

Span 3 Span 4

GIRDER ELEVATION

Partial Plan - ℄ Pier #3 to Sta. 988+37.85 @ H.C.L.

* Note: 6'-0" Dimension is measured along ℄ of Bottom Flange from ℄ of Bearing at ℄ of Bottom Flange.

GIRDER DIMENSION SCHEDULE

DIMENSION	"H"	"J"	"K"	"L"	"M"	"MM"	"N"	"P"	"Q"	"R"	"S"	"SS"	"aa"	"bb"
WEB #1	135'-3⅜"	46'-7⅝"	30'-0⅞"	62'-0"	12'-9⅝"	-	16'-1⅝"	2'-3⅛"	14'-6⅜"	17'-6"	10'-10⅝"	-	3'-0"	3'-0"
WEB #2	136'-6¼"	47'-0⅛"	30'-4¼"	62'-6⅝"	12'-11⅜"	-	16'-3⅛"	2'-3⅝"	14'-8"	17'-7⅝"	10'-11⅜"	-	3'-0⅝"	3'-0⅝"
WEB #3	137'-9½"	47'-6⅜"	30'-7⅝"	63'-1⅞"	-	13'-2⅝"	16'-4⅞"	2'-3⅝"	14'-9⅝"	17'-10"	-	11'-2¾"	3'-0⅛"	2'-11⅛"
HCL & PGL	138'-1⅛"	47'-7⅜"	-	-	-	-	-	-	-	-	-	-	-	-
WEB #4	139'-0⅜"	47'-11⅝"	30'-11"	63'-8⅛"	-	13'-4¼"	16-6⅛"	2'-3⅝"	14'-11⅛"	17'-11⅞"	-	11'-4"	3'-1"	3'-0"

Note: All dimensions in table are at Top Outside of Webs.

DIMENSION	"F.S.5"	F.S.6"	"F.S.7"	"F.S.8"
WEB #1	-	80'-9⅝"	-	65'-0"
WEB #2	-	81'-6⅝"	-	65'-7⅛"
WEB #3	69'-2¼"	-	68'-2⅛"	-
HCL & PGL	69'-4"	82'-6⅜"	68'-4⅝"	66'-4¼"
WEB #4	69'-9⅛"	-	68'-10⅛"	-

FRAMING PLAN NOTES:

1. All plan dimensions are measured on a horizontal plane at 40° F, except dimensions marked with a * , which are measured along the slope of the structure.
2. All webs curve to a common center With the Horizontal Control Line.
3. All Stationing is measured along Horizontal Control Line.
4. For Typical Box Girder Geometry, see Drawing No. B-15.
5. For Camber of Girder Webs, see Drawing No. B-18 & B-19.
6. All Stiffeners and internal diaphragms are normal to girder unless noted otherwise. For Type of Stiffener, See Details, Dwg. No. B-20 to B-24.
7. Pier Diaphragm plates are parallel to Pier ℄, except at Pier #4.
8. Abutment end diaphragm plates to be vertical under dead load.
9. Provide 1½" diameter drainage hole in the bottom flange. See Dwg. No. B-27 for details and hole spacing.
10. For Typical Bracing details, see Drawing No. B-20 to B-24.
11. For Field Splice Details, See Drawing No. B-25.
12. For Bottom Flange Longitudinal Stiffener, See Dwg. No. B-27.
13. For top Flange filler plates See table, Dwg. No. B-25.
14. For Shear connection details, See Dwg. No. B-27.
15. For Access Manhole Details, See Dwg. No. B-27.
16. For Welding Details, See Dwg. No. B-27.

INITIAL DESIGN			
Designed By	AEG	1-90	2-90
Checked By	DBW	3-90	3-90
Detailed By	AEG	1-90	Checked By AEG 2-90
		Quantities By	JHP 2-90
		Checked By	JHP

\\\\\USANSPEC\\\\\\\\\\\\\\\\\\\\
USERNAME
ST24115\SEAE61743\61\SEFRM0213.900

DIVISION OF HIGHWAYS

I-25 / 470 INTERCHANGE
RAMP E FLYOVER
FRAMING PLAN AND
GIRDER ELEVATION

Designer A. GRIFFITH		Structure Number/s	F - 17 - JW
Detailer A. GRIFFITH			
Drawing Number	B-16	of	45 Drawings

E-470
Engineer 470 Partnership

AS CONSTRUCTED					
NO REVISIONS		REVISED		VOID	

FEDERAL ROAD REGION NO.	DIVISION	PROJECT NUMBER	SHEET NUMBER
VIII	COLORADO	1A06/1802	127

REVISIONS		
- -		
- -		
- -		

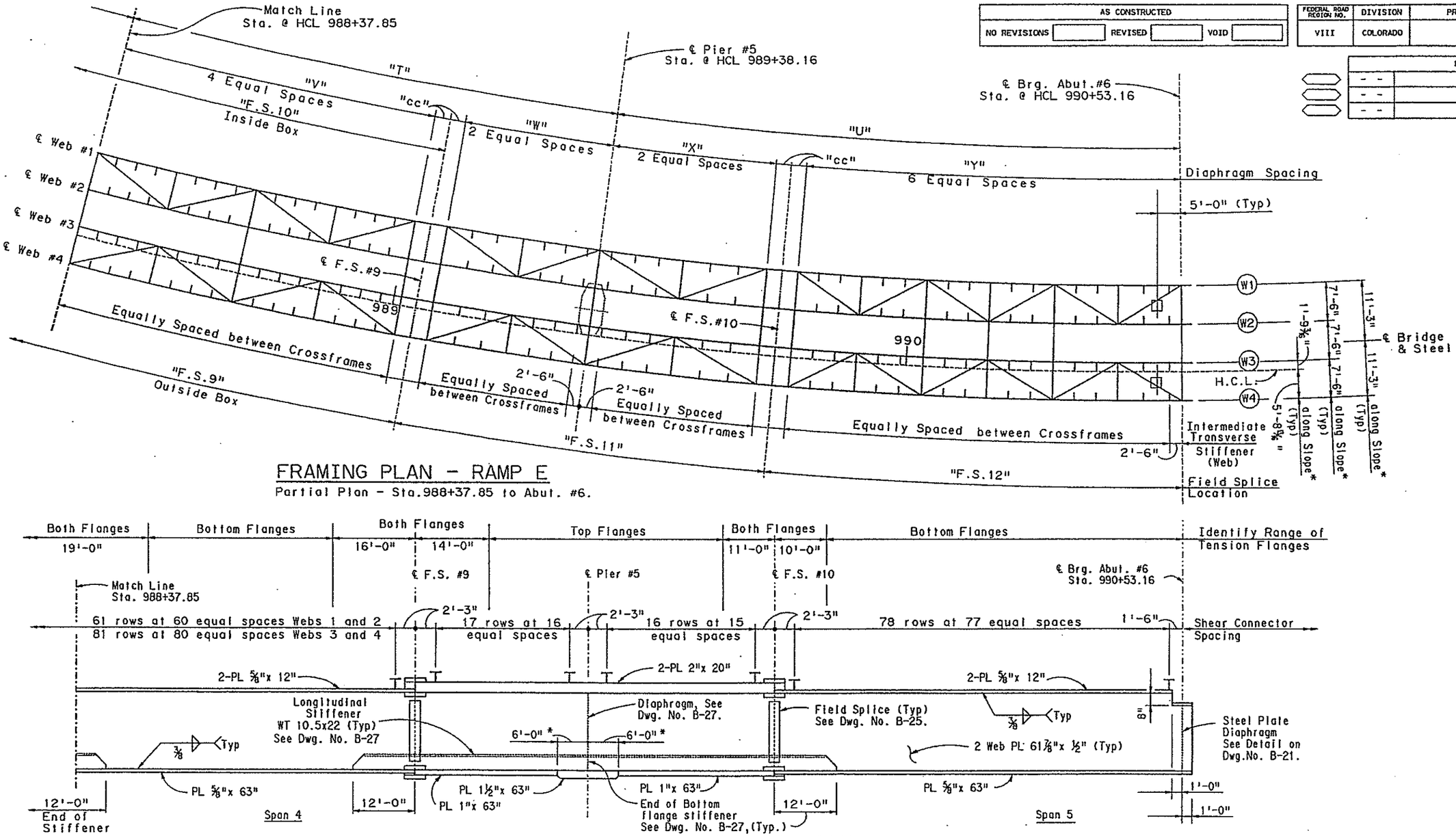

FRAMING PLAN - RAMP E

Partial Plan - Sta.988+37.85 to Abut. #6.

GIRDER ELEVATION

Partial Elev. - Sta. 988+37.85 to Abut.#6

* Note: 6'-0" Dimension is measured along ℄ Bottom Flange from ℄ of Bearing at ℄ of Bottom Flange.

GIRDER DIMENSION SCHEDULE

DIMENSION	"T"	"U"	"V"	"W"	"X"	"Y"	"cc"	"F.S.9"	"F.S.10"	"F.S.11"	"F.S.12"
WEB #1	98'-3⅛"	112'-7¹⁵⁄₁₆"	62'-3⅛"	30'-0"	33'-0"	73'-7¹⁵⁄₁₆"	3'-0"	-	68'-3⅛"	69'-0"	76'-7¹⁵⁄₁₆"
WEB #2	99'-2⅛"	113'-8⅜"	62'-10⅛"	30'-3⅜"	33'-3⅛"	74'-4⅛"	3'-0⅝"	-	68'-10¹⁵⁄₁₆"	69'-7¹⁵⁄₁₆"	77'-4⅜"
WEB #3	100'-1⅛"	114'-9⅛"	63'-5"	30'-6¾"	33'-7⅜"	75'-0⅝"	3'-0¹⁵⁄₁₆"	80'-8⅛"	-	70'-3½"	78'-1"
HCL & PGL	100'-3¾"	115'-0"	-	-	-	-	-	80'-10¼"	69'-8⅛"	70'-5¼"	78'-3"
WEB #4	101'-0⅛"	115'-9⅝"	64'-0"	30'-10⅛"	33'-11⅛"	75'-8⅝"	3'-1"	81'-5"	-	70'-11⅛"	78'-9⅜"

Note: All Dimensions in table are at top outside of Webs.

See Additional Framing Plan notes on Dwg. No. B-16.

E-470 Engineer 470 Partnership

DIVISION OF HIGHWAYS

I-25 / 470 INTERCHANGE
RAMP E FLYOVER
FRAMING PLAN AND GIRDER ELEVATION

Designer A. GRIFFITH	Structure Numbers	F - 17 - JW
Detailer A. GRIFFITH		
Drawing Number B-17 of 45 Drawings		

INITIAL	DATE
AEG	1-90
DBW	3-90
AEG	1-90

Designed By	AEG	Checked By	AEG
Checked By	JHP	Quantities By	JHP
Detailed By	AEG	Checked By	AEG

$$$$DONSPEC
USERNAME
S7241ISDSAME##241161ISEFRM0313.900

AS CONSTRUCTED					
NO REVISIONS		REVISED		VOID	

FEDERAL ROAD REGION NO.	DIVISION	PROJECT NUMBER	SHEET NUMBER
VIII	COLORADO	1A06/180Z	128

REVISIONS		
- -		
- -		
- -		

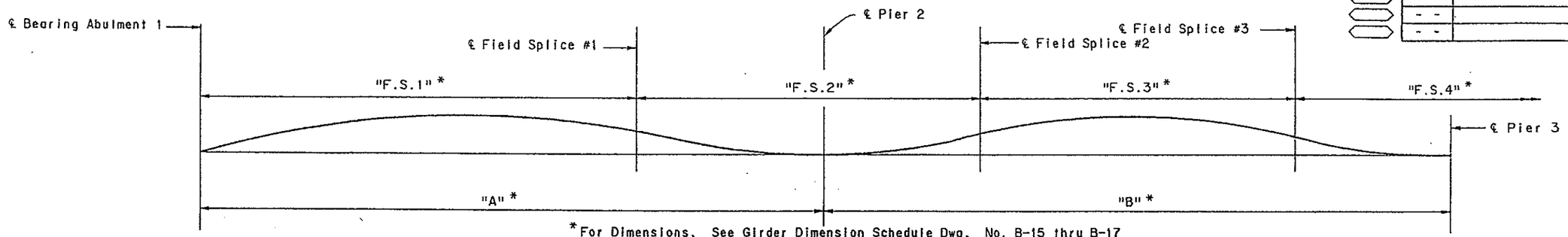

*For Dimensions, See Girder Dimension Schedule Dwg. No. B-15 thru B-17

TWENTIETH POINT	1.000	1.050	1.100	1.150	1.200	1.250	1.300	1.350	1.400	1.450	1.500	1.550	1.600	1.650	1.700	1.750	1.800	1.850	1.900	1.950	2.000	2.050	2.100	2.150	2.200	2.250	2.300	2.350	2.400	2.450	2.500	2.550	2.600	2.650	2.700	2.750	2.800	2.850	2.900	2.950	3.000	
GIRDER D.L. DEFLECTION (FT.)	0.000	0.003	0.006	0.008	0.010	0.012	0.014	0.014	0.015	0.015	0.014	0.013	0.011	0.010	0.008	0.006	0.005	0.003	0.001	0.001	0.000	0.000	0.001	0.003	0.004	0.006	0.008	0.010	0.012	0.012	0.011	0.010	0.009	0.007	0.005	0.003	0.002	-.000	-.001	-.001	0.000	
TOTAL D.L.LESS GIRDER D.L.DEFLECTION(FT.)	0.000	0.014	0.027	0.039	0.050	0.058	0.063	0.067	0.069	0.068	0.066	0.060	0.053	0.045	0.037	0.025	0.021	0.010	0.004	0.002	0.000	0.001	0.005	0.013	0.022	0.030	0.038	0.046	0.052	0.054	0.052	0.048	0.041	0.032	0.022	0.013	0.005	-.002	-.007	-.006	0.000	(Inside Box)
TOTAL D.L. DEFLECTION (FT.)	0.000	0.017	0.033	0.047	0.060	0.070	0.077	0.081	0.084	0.083	0.080	0.073	0.064	0.055	0.045	0.031	0.026	0.013	0.005	0.003	0.000	0.001	0.006	0.016	0.026	0.036	0.046	0.056	0.063	0.066	0.063	0.058	0.050	0.039	0.027	0.016	0.007	-.002	-.008	-.007	0.000	
GIRDER D.L. DEFLECTION (FT.)	0.000	0.003	0.006	0.008	0.010	0.012	0.013	0.013	0.013	0.012	0.012	0.010	0.009	0.007	0.006	0.005	0.003	0.002	0.001	0.000	0.000	0.001	0.003	0.006	0.009	0.013	0.015	0.018	0.021	0.023	0.023	0.022	0.021	0.018	0.015	0.013	0.006	0.003	0.001	0.000	0.000	
TOTAL D.L.LESS GIRDER D.L.DEFLECTION(FT.)	0.000	0.013	0.025	0.037	0.047	0.054	0.059	0.062	0.063	0.062	0.058	0.053	0.046	0.038	0.030	0.022	0.015	0.008	0.002	0.000	0.000	0.000	0.005	0.014	0.027	0.041	0.054	0.068	0.082	0.092	0.097	0.099	0.096	0.089	0.075	0.056	0.045	0.027	0.014	0.005	0.000	(Outside Box)
TOTAL D.L. DEFLECTION (FT.)	0.000	0.016	0.031	0.045	0.057	0.066	0.072	0.075	0.076	0.074	0.070	0.063	0.055	0.045	0.036	0.027	0.018	0.010	0.003	0.000	0.000	0.000	0.006	0.017	0.033	0.050	0.067	0.083	0.100	0.113	0.120	0.122	0.118	0.110	0.096	0.071	0.058	0.033	0.017	0.006	0.000	

SPANS 1 & 2

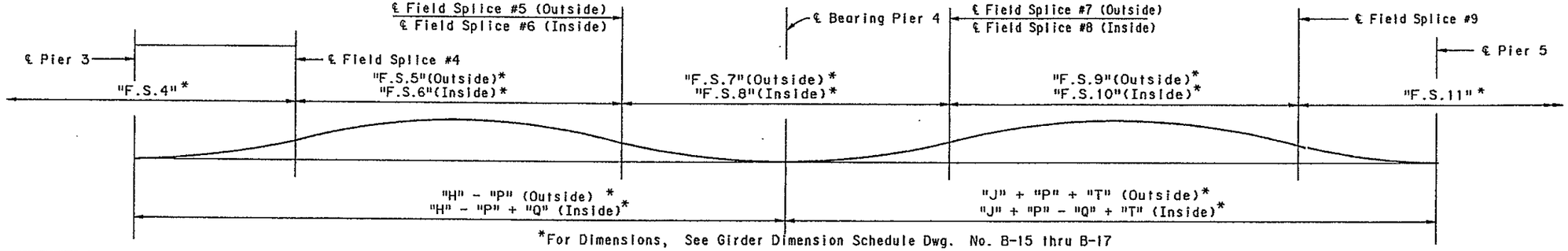

*For Dimensions, See Girder Dimension Schedule Dwg. No. B-15 thru B-17

TWENTIETH POINT	3.000	3.050	3.100	3.150	3.200	3.250	3.300	3.350	3.400	3.450	3.500	3.550	3.600	3.650	3.700	3.750	3.800	3.850	3.900	3.950	4.000	4.050	4.100	4.150	4.200	4.250	4.300	4.350	4.400	4.450	4.500	4.550	4.600	4.650	4.700	4.750	4.800	4.850	4.900	4.950	5.000	
GIRDER D.L. DEFLECTION (FT.)	0.000	0.003	0.007	0.011	0.016	0.022	0.028	0.033	0.037	0.042	0.043	0.045	0.040	0.038	0.031	0.026	0.018	0.009	0.004	0.000	0.000	-.002	-.002	-.002	-.001	0.000	0.002	0.003	0.005	0.006	0.006	0.006	0.006	0.004	0.003	0.002	0.000	-.001	-.002	-.001	0.000	
TOTAL D.L.LESS GIRDER D.L.DEFLECTION(FT.)	0.000	0.015	0.034	0.060	0.089	0.116	0.142	0.167	0.185	0.198	0.201	0.199	0.175	0.147	0.119	0.094	0.077	0.039	0.016	0.000	0.000	-.007	-.010	-.008	-.004	0.003	0.011	0.019	0.025	0.030	0.033	0.032	0.028	0.022	0.015	0.008	0.003	-.002	-.006	-.006	0.000	(Inside Box)
TOTAL D.L. DEFLECTION (FT.)	0.000	0.018	0.041	0.077	0.105	0.138	0.170	0.200	0.222	0.240	0.244	0.244	0.215	0.185	0.150	0.120	0.095	0.048	0.020	0.000	0.000	-.009	-.012	-.010	-.005	0.003	0.013	0.022	0.030	0.036	0.039	0.038	0.034	0.026	0.018	0.010	0.003	-.003	-.008	-.007	0.000	
GIRDER D.L. DEFLECTION (FT.)	0.000	0.001	0.001	0.004	0.007	0.009	0.011	0.013	0.015	0.017	0.017	0.016	0.015	0.012	0.009	0.006	0.004	0.002	0.002	0.001	0.000	0.002	0.006	0.010	0.016	0.021	0.027	0.031	0.034	0.036	0.037	0.036	0.033	0.029	0.023	0.019	0.014	0.009	0.005	0.001	0.000	
TOTAL D.L.LESS GIRDER D.L.DEFLECTION(FT.)	0.000	0.002	0.007	0.017	0.028	0.040	0.051	0.062	0.072	0.076	0.077	0.073	0.067	0.050	0.034	0.024	0.012	0.003	0.003	0.002	0.000	0.010	0.026	0.049	0.072	0.100	0.124	0.141	0.156	0.167	0.167	0.162	0.142	0.121	0.110	0.068	0.053	0.031	0.015	0.008	0.000	(Outside Box)
TOTAL D.L. DEFLECTION (FT.)	0.000	0.003	0.008	0.021	0.035	0.049	0.062	0.075	0.087	0.093	0.094	0.089	0.082	0.062	0.043	0.030	0.016	0.005	0.005	0.003	0.000	0.012	0.032	0.059	0.088	0.121	0.151	0.172	0.190	0.203	0.204	0.198	0.175	0.150	0.133	0.087	0.067	0.040	0.020	0.009	0.000	

SPANS 3 & 4

INITIAL	DATE
Designed By	AEG	1-90
Checked By	GNT	1-90
Detailed By	GMC	1-90
Quantities By	AEG	2-90
Checked By	DBW	2-90

SSSSDOCSPECSSSSSSSSSSSSSSS
USERNAME
S12411-05&R #174/161SECAM0113.90R

E-470
Engineer 470 Partnership

DIVISION OF HIGHWAYS

I-25 / 470 INTERCHANGE
RAMP E FLYOVER
CAMBER CUTTING DIAGRAM

Designer A. GRIFFITH	Structure Numbers	F - 17 - JR
Detailer A. GRIFFITH		
Drawing Number B-18 of 45 Drawings		

AS CONSTRUCTED					
NO REVISIONS		REVISED		VOID	

FEDERAL ROAD REGION NO.	DIVISION	PROJECT NUMBER	SHEET NUMBER
VIII	COLORADO	1A06/1802	129

REVISIONS			
	- -		
	- -		
	- -		

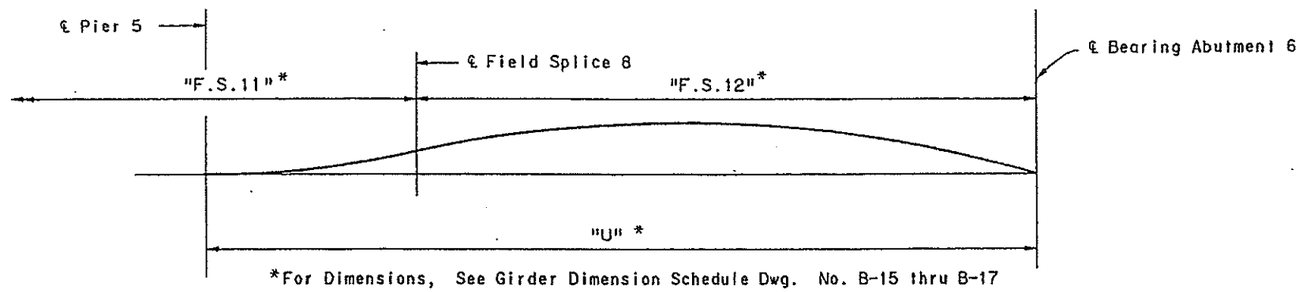

*For Dimensions, See Girder Dimension Schedule Dwg. No. B-15 thru B-17

TWENTIETH POINT	5.000	5.050	5.100	5.150	5.200	5.250	5.300	5.350	5.400	5.450	5.500	5.550	5.600	5.650	5.700	5.750	5.800	5.850	5.900	5.950	6.000	
GIRDER D.L DEFLECTION (FT.)	0.000	0.002	0.005	0.008	0.012	0.016	0.020	0.023	0.027	0.029	0.031	0.032	0.033	0.032	0.029	0.027	0.022	0.017	0.008	0.000	0.000	
TOTAL D.L.LESS GIRDER D.L.DEFLECTION(FT.)	0.000	0.009	0.020	0.034	0.051	0.068	0.085	0.101	0.116	0.130	0.139	0.144	0.144	0.140	0.126	0.110	0.088	0.060	0.032	0.000	0.000	Inside Box
TOTAL D.L. DEFLECTION (FT.)	0.000	0.011	0.025	0.042	0.063	0.084	0.105	0.124	0.143	0.159	0.170	0.176	0.177	0.172	0.155	0.137	0.110	0.077	0.040	0.000	0.000	
GIRDER D.L DEFLECTION (FT.)	0.000	0.000	0.001	0.003	0.006	0.009	0.012	0.015	0.018	0.021	0.023	0.025	0.025	0.024	0.023	0.022	0.019	0.015	0.005	0.000	0.000	
TOTAL D.L.LESS GIRDER D.L.DEFLECTION(FT.)	0.000	0.001	0.006	0.014	0.027	0.040	0.053	0.066	0.080	0.093	0.103	0.109	0.113	0.113	0.107	0.088	0.076	0.055	0.025	0.010	0.000	Outside Box
TOTAL D.L DEFLECTION (FT.)	0.000	0.001	0.007	0.017	0.033	0.049	0.064	0.081	0.098	0.114	0.126	0.134	0.138	0.137	0.130	0.110	0.095	0.070	0.030	0.010	0.000	

SPAN 5

	INITIAL	DATE
Designed By	AEG	1-90
Checked By	GNT	1-90
Detailed By	GMC	1-90
Checked By	DBW	2-90
Quantities By	AEG	2-90
Checked By	GMC	1-90
Designed By	AEG	1-90

USA INVAM
S124E1FCSAM.6934)561 SECAM0213.BOR

E-470
Engineer 470 Partnership

DIVISION OF HIGHWAYS

I-25 / 470 INTERCHANGE
RAMP E FLYOVER
CAMBER CUTTING DIAGRAM

Designer A. GRIFFITH		Structure Numbers	F - 17 - JW
Detailer A. GRIFFITH			
Drawing Number	B-19	of	45 Drawings

AS CONSTRUCTED							
NO REVISIONS		REVISED		VOID			

FEDERAL ROAD REGION NO.	DIVISION	PROJECT NUMBER	SHEET NUMBER
VIII	COLORADO	1A06/1802	130

REVISIONS			
- -			
- -			
- -			

	INITIAL	DATE
Designed By	AEG	1-90
Checked By	JHP	1-90
Detailed By	GMC	1-90

Checked By	AEG	2-90
Quantities By	JHP	2-90
Checked By	JHP	2-90
	AEG	2-90

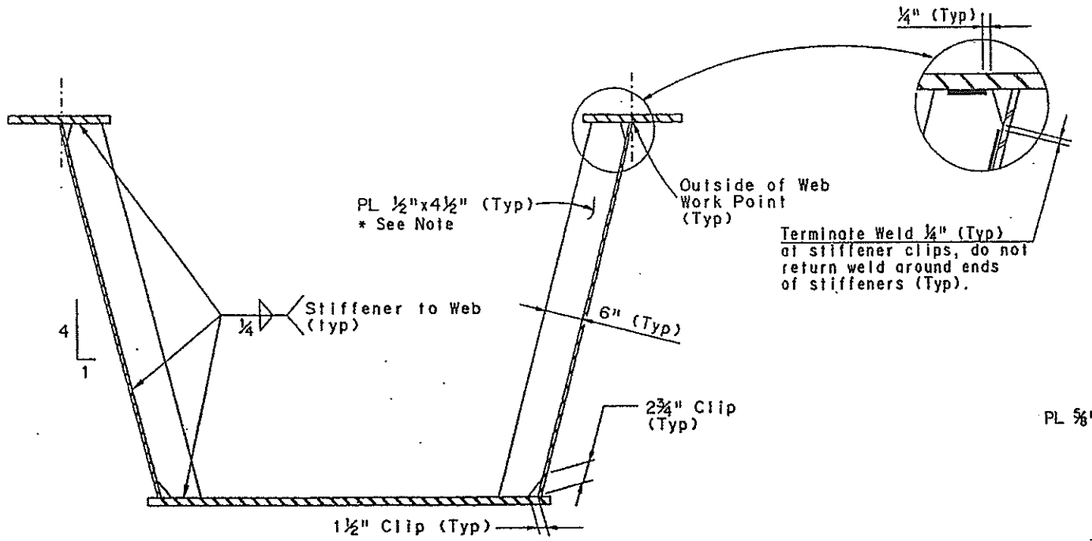

INTERMEDIATE STIFFENER #1 & #6

* Note: The first Intermediate Stiffeners located 2'-6" from ℄ Brg. of Abutment (#1 & #6), and Lateral Bracing supports are ⅝" x 6" (See crossframe Detail Below). At Abutments (#1 & #6) Diaphragms and Pier (#2, #3, #4 and #5) Diaphragms, solid diaphragm plate between webs shall be used as shown in Details on Dwg. No. B-21, B-22 and B-23.

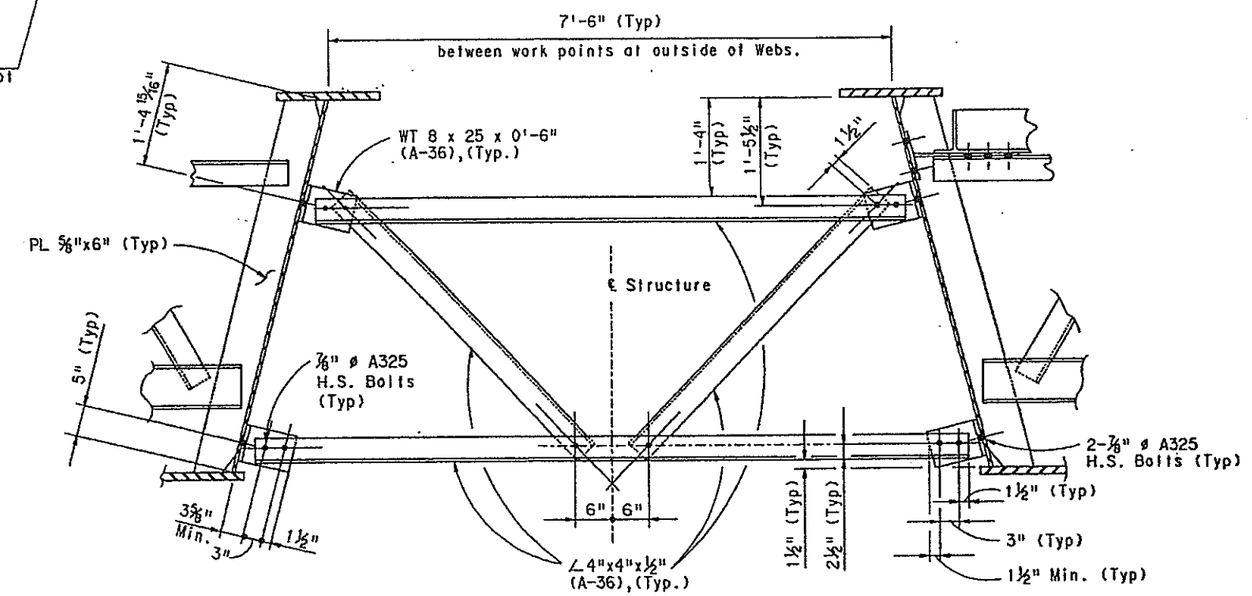

TEMPORARY ERECTION CROSS-FRAME

Note: Cross-frame between box girders shall be in place during placement and curing of deck, (until slab has reached its 28-Day design strength) after which these diaphragms shall be removed, with the exception of ⅞" ø H.S. bolts through the web, which shall be torqued to required Fastener Tension according to Std. Specification.

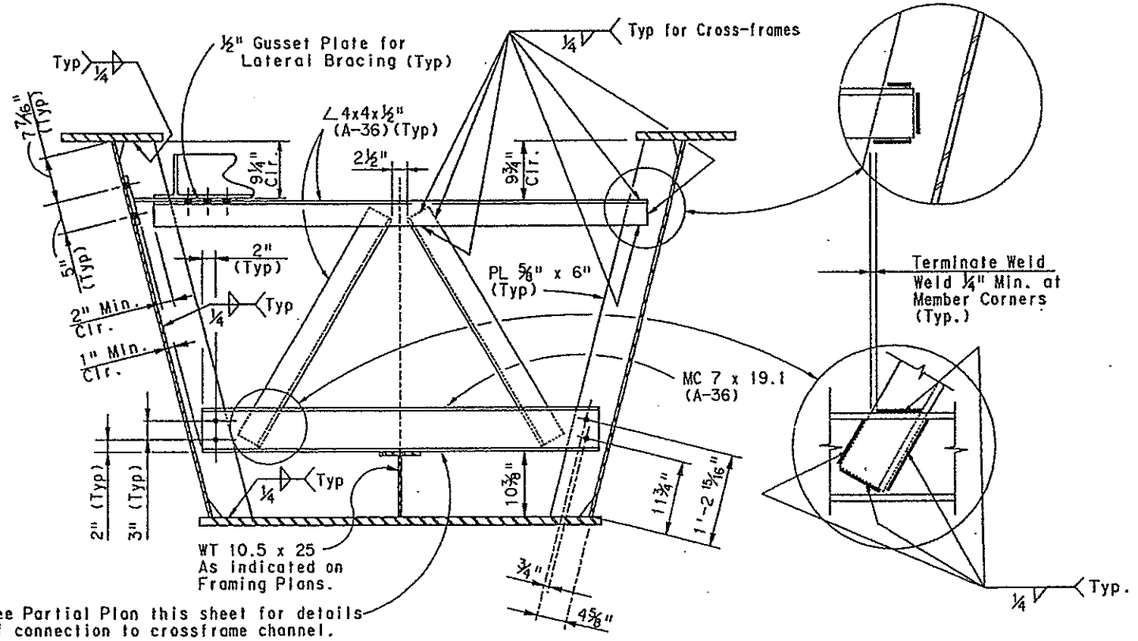

See Partial Plan this sheet for details of connection to crossframe channel.

CROSSFRAME DETAIL

Note: Terminate Welds for Stiffeners attached to Web similar to Detail shown above for Intermediate Stiffener.

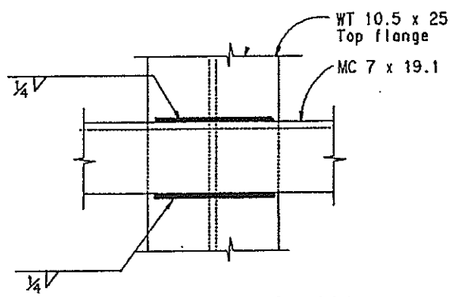

PARTIAL PLAN

WELD NOTES:

1. Terminate Weld ¼" short of Stiffener end. Do not return Weld around end of Stiffener, (Typ).
2. Weld all Bottom Flange Longitudinal Stiffeners to all Cross frame channels where stiffener is present.

E-470
Engineer 470 Partnership

DIVISION OF HIGHWAYS

I-25 / 470 INTERCHANGE
RAMP E FLYOVER
INTERMEDIATE STIFFENER
AND CROSS-FRAME DETAILS

Designer A. Griffith		Structure Numbers	F - 17 - JW
Detailer G.Christinachi			
Drawing Number	B-20 of 45 Drawings		

$$$$DGNSPEC$$$$$$$$$$$$$$$$
USERNAME
$$$$SYTIME$$$$$$$$

AS CONSTRUCTED					
NO REVISIONS		REVISED		VOID	

FEDERAL ROAD REGION NO.	DIVISION	PROJECT NUMBER	SHEET NUMBER
VIII	COLORADO	1A06	131

REVISIONS			
A-1	4-02-90	Dimensions & Jacking pt.	AEG
	- -		
	- -		

INITIAL	DATE
Designed By ALG	2-90
Checked By JHP	3-90
Quantities By JHP	2-90
Detailed By GMC	2-90
Checked By AEG	2-90

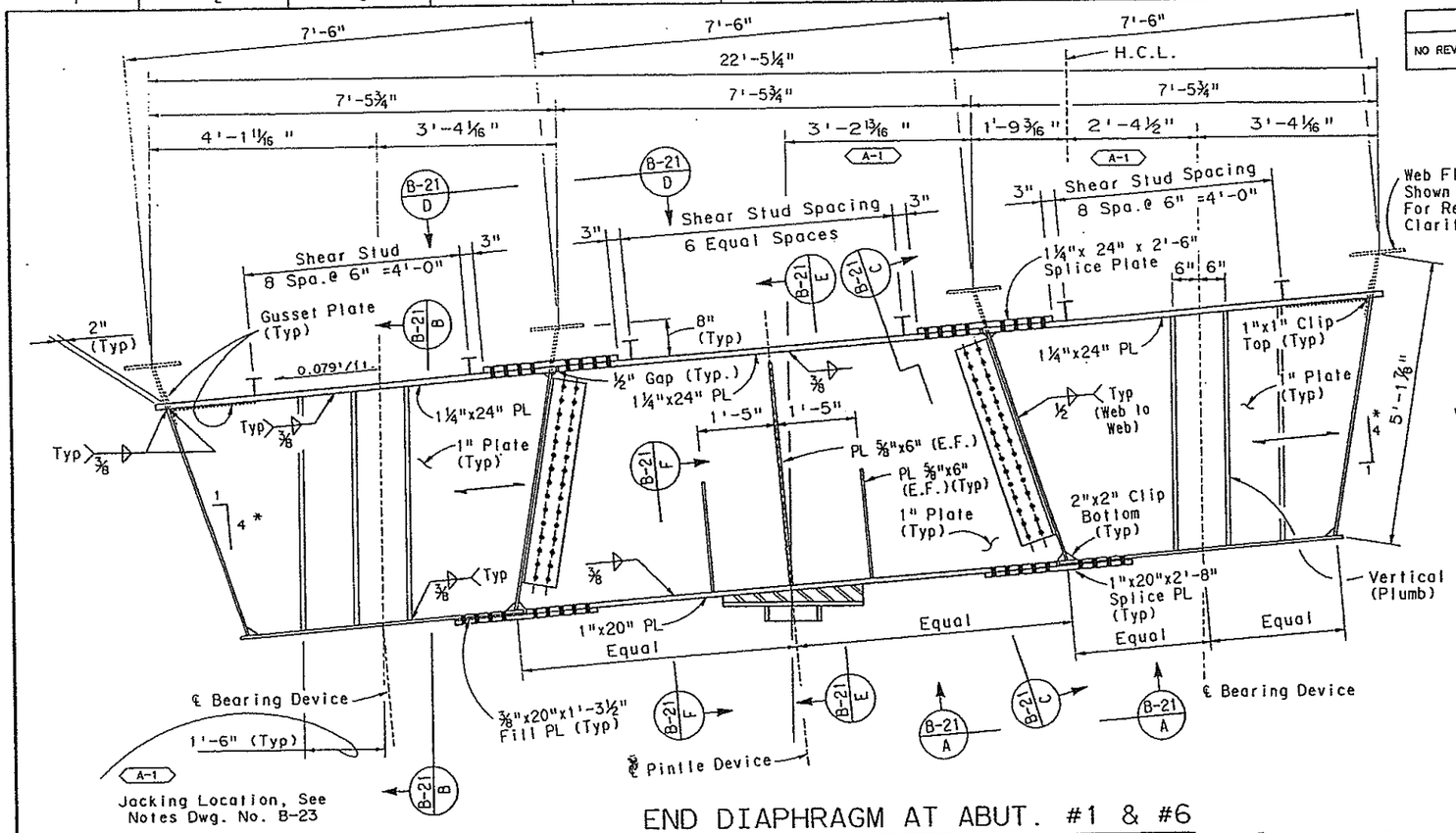

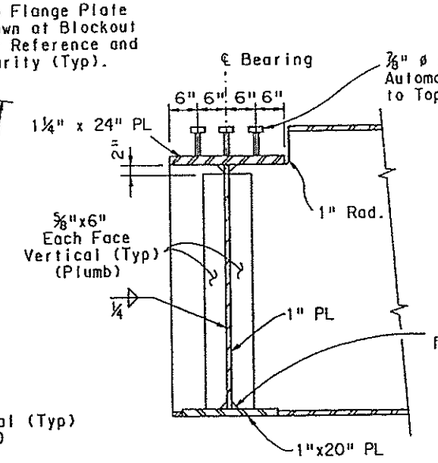

SECTION B-21 E

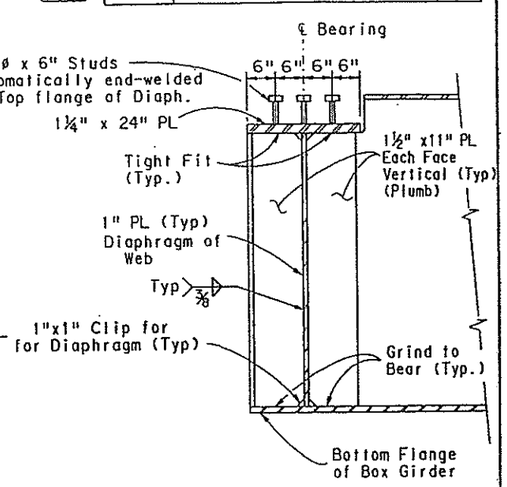

SECTION B-21 B

END DIAPHRAGM AT ABUT. #1 & #6

Note: Lateral Bracing Details Not Shown for Clarity, See Details Shown on Dwg. No. B-20 thru B-24.
For Additional Diaphragm Notes, See Dwg. No. B-22.
* Relative to Box Geometry

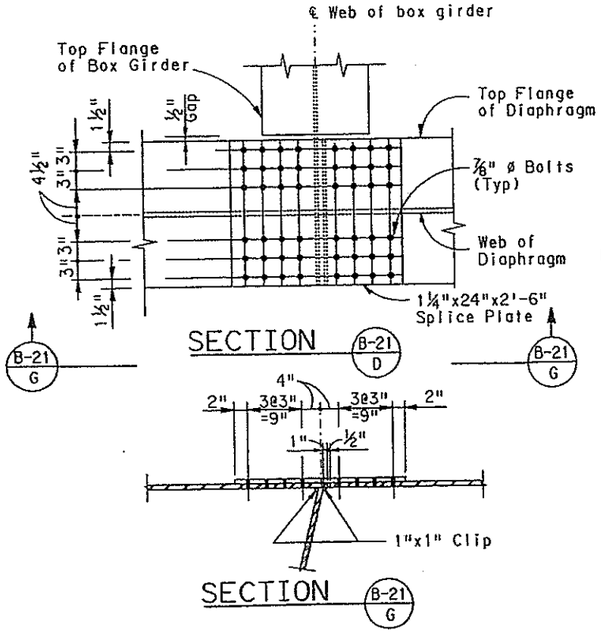

SECTION B-21 D

SECTION B-21 G

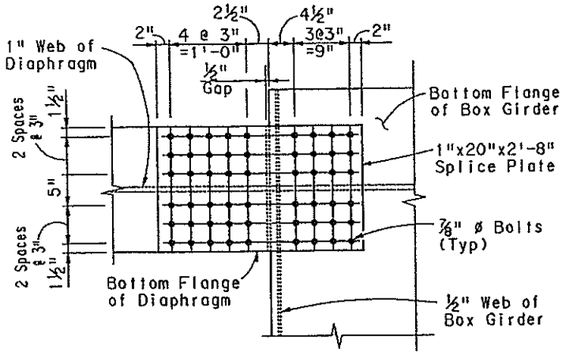

SECTION B-21 A

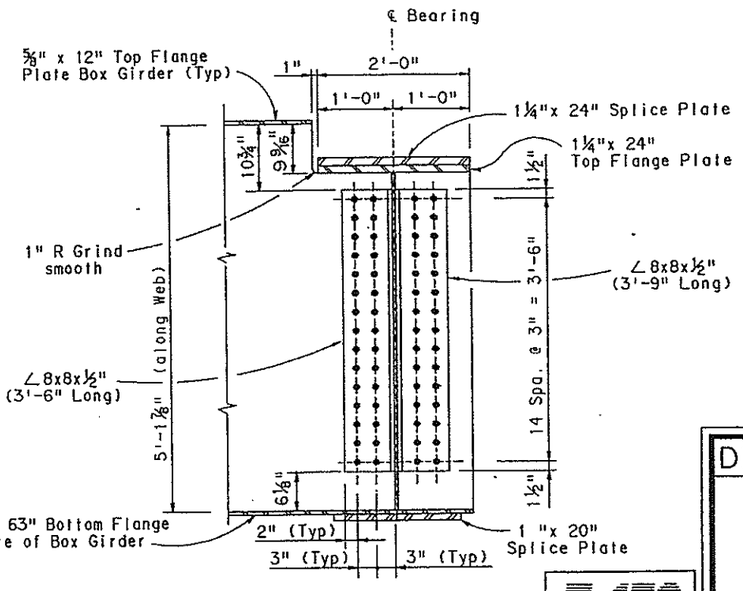

SECTION B-21 C
Dimensions along Web

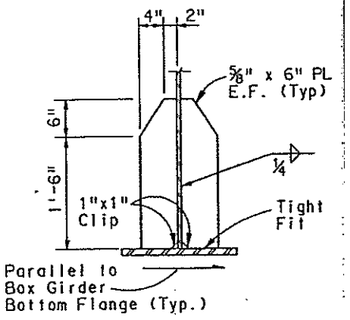

SECTION B-21 F

E-470
Engineer 470 Partnership

DIVISION OF HIGHWAYS

I-25/470 INTERCHANGE
RAMP E FLYOVER
END DIAPHRAGM DETAILS
ABUTMENTS #1 & #6

Designer A. Griffith		Structure Numbers	F - 17 - JW
Detailer G.Christnacht			
Drawing Number B-21	of		Drawings

USERNAME = USERNAME
S:\241\SEDIA\E$\241161\SEDIA0213.90R

AS CONSTRUCTED					
NO REVISIONS		REVISED		VOID	

FEDERAL ROAD REGION NO.	DIVISION	PROJECT NUMBER	SHEET NUMBER
VIII	COLORADO	1A06	132

REVISIONS			
A-2	4-09-90	Weld Size, Box Web to Diaph. Web	AEG
	- -		
	- -		

INITIAL	DATE
Designed By	AEG 1-90
Checked By	JHP 3-90
Quantities By	JHP 3-90
Checked By	GMC 1-90
Detailed By	AEG 2-90
Checked By	JHP 3-90
Quantities By	JHP 2-90
Checked By	AEG 2-90

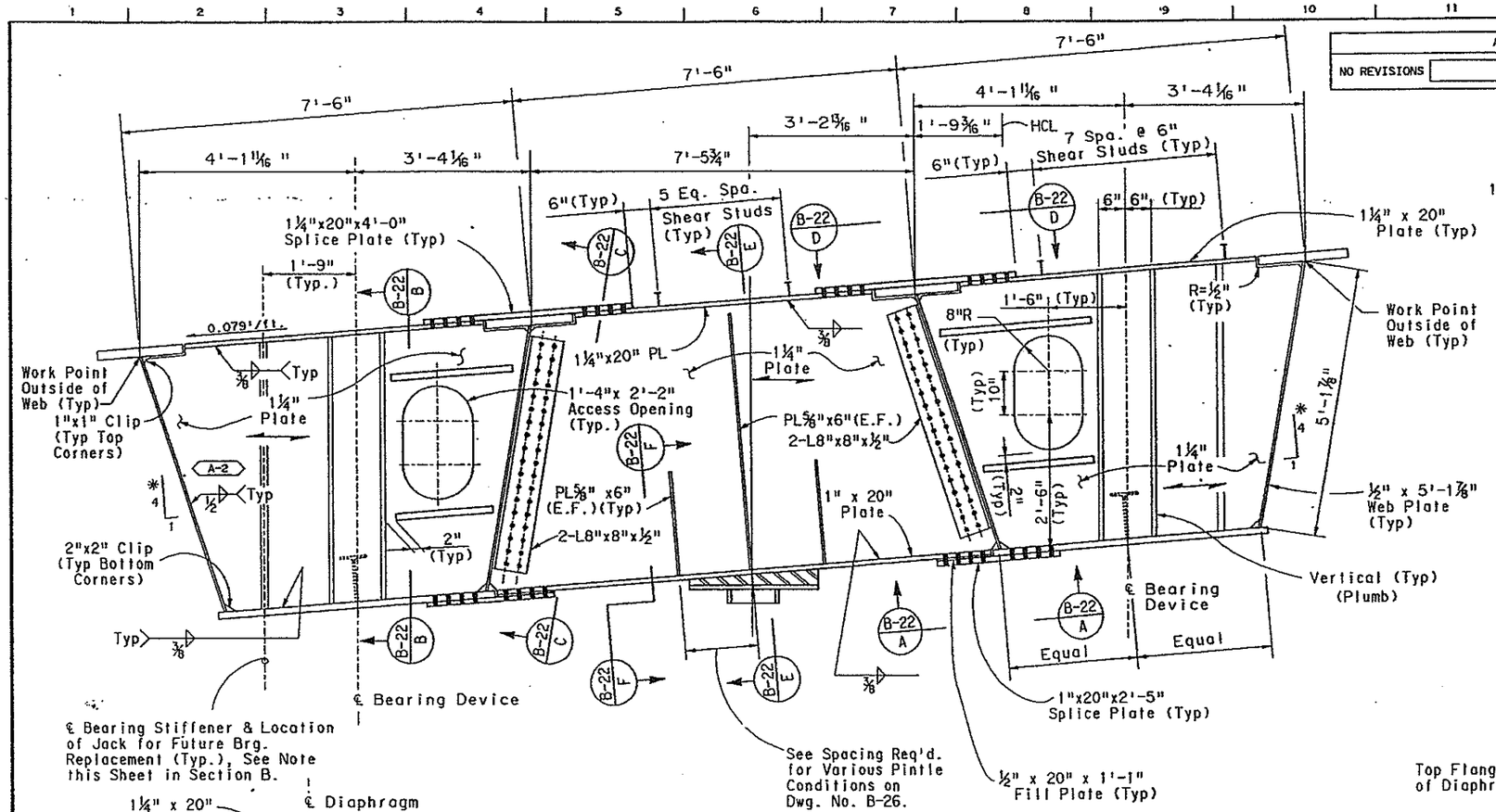

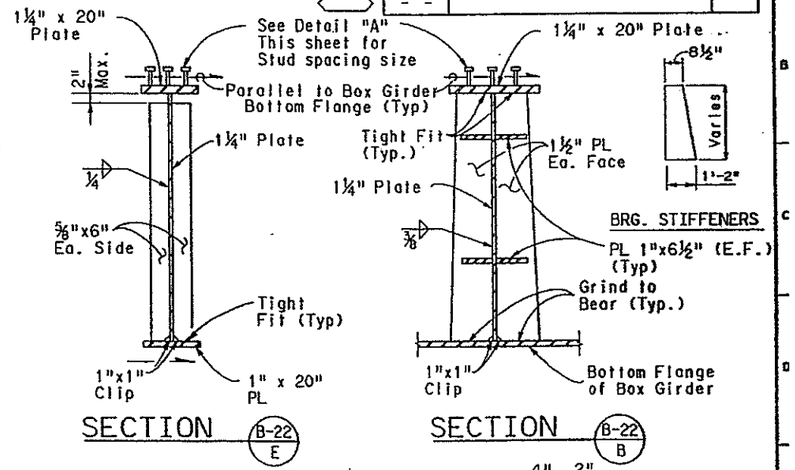

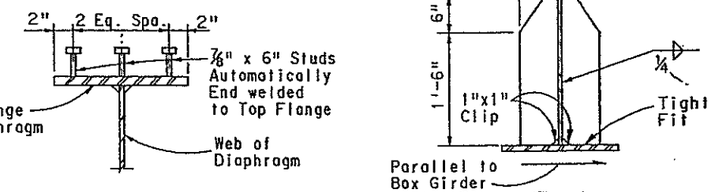

INTERIOR DIAPHRAGM AT PIERS #2, #3 & #5

* Relative to Box Geometry

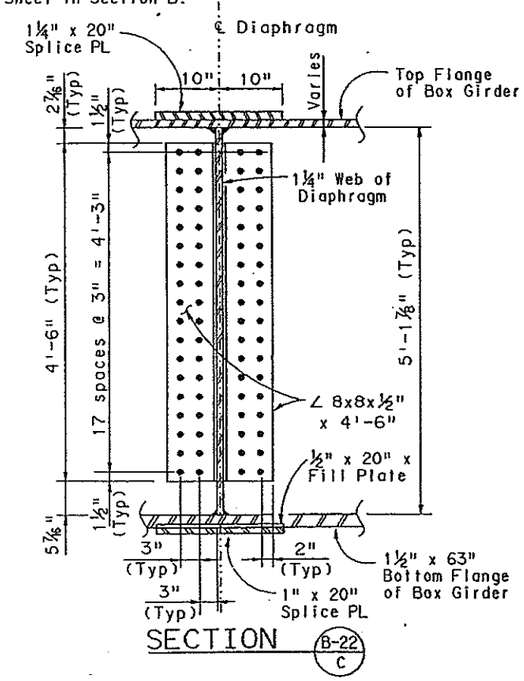

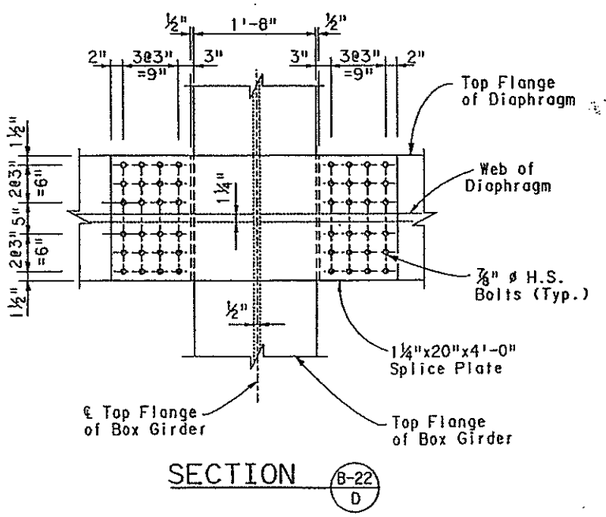

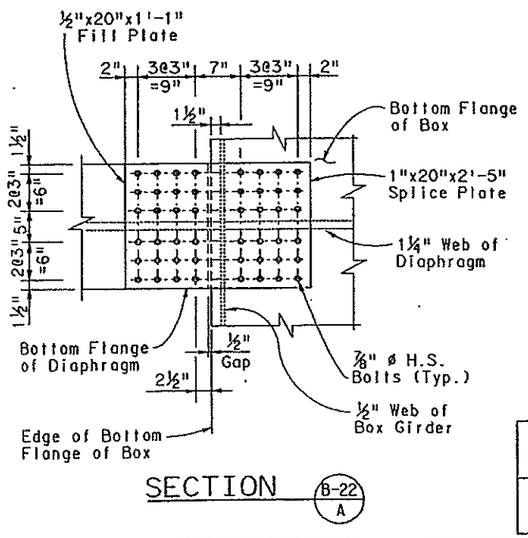

NOTES:

1. For Box Girder Geometry, See Dwg. No. B-15.
2. For Bearing Device Details, See Dwg. No. B-35 & B-36.
3. For Pintle Details, See Dwg. No. B-26.
4. Raising of Superstructure for Bearing Replacement to be done without Live Load on Deck. Jack only one bearing at a time.
5. ——— = Primary Direction of Rolling for Steel Plates as Fabricated in Mill.
6. Lateral bracing not shown for clarity. See Dwg. No.B-24.
7. Steel for Shear connectors shall be AASHTO M-169, (ASTM A-103).

E-470
Engineer 470 Partnership

DIVISION OF HIGHWAYS

I-25/470 INTERCHANGE
RAMP E FLYOVER
INTERIOR DIAPHRAGM DETAILS
PIERS #2,3,& #5

Designer A. Griffith		Structure Numbers	F - 17 - JW
Detailer G.Christnacht			
Drawing Number	B-22	of	45 Drawings

PIER DIAPHRAGM DETAILS

SEDIA0113.90R

$$$$DGNSPEC$$$$$$$$$$$$$$$$
USERNAME
S124(1SDAEA74)161(1SED1A0113.90R

AS CONSTRUCTED					
NO REVISIONS		REVISED		VOID	

FEDERAL ROAD REGION NO.	DIVISION	PROJECT NUMBER	SHEET NUMBER
VIII	COLORADO	1A06/1802	133

REVISIONS			
	- -		
	- -		
	- -		

INITIAL	DATE
Designed By	AEG 3-90
Checked By	JHP 3-90
Detailed By	GMC 2-90
Checked By	JHP 3-90
Quantities By	JHP 3-90
Checked By	AEG 3-90

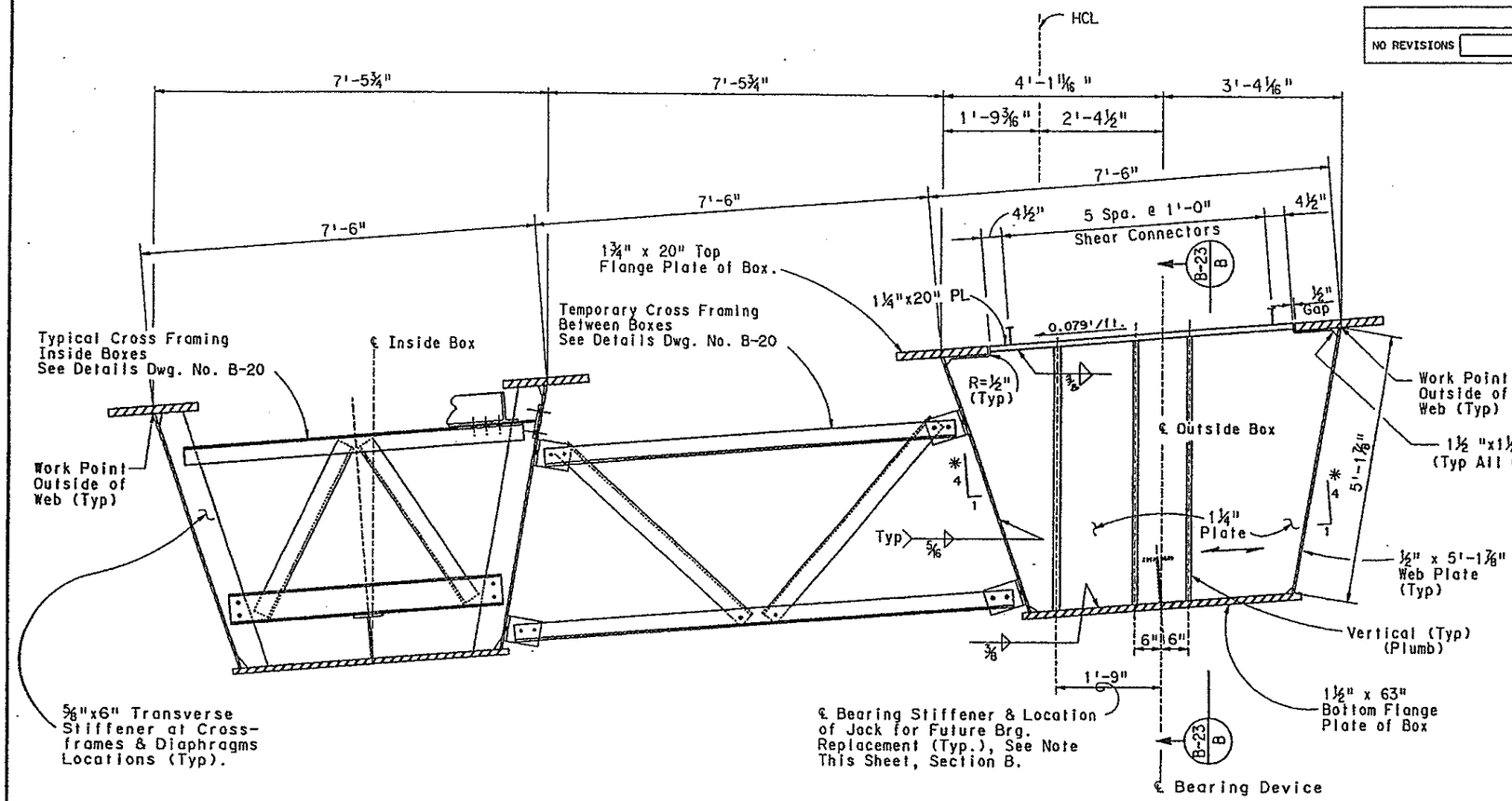

NOTES:

1. For Box Girder Geometry, See Dwg. No. B-15.
2. For Bearing Device Details, See Dwg. No. B-35 & B-36.
3. Raising of Superstructure for Bearing Replacement to be done without Live Load on Deck. Jack only one bearing at a time.
4. ——— = Primary Direction of Rolling for Steel Plates as Fabricated in Mill.
5. Steel for Shear connectors shall be AASHTO M-169, (ASTM A-103).

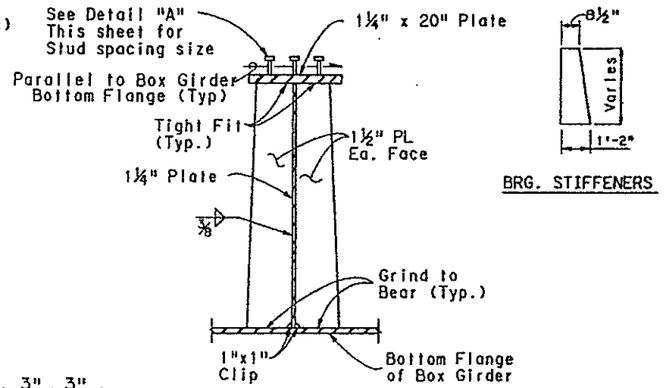

BRG. STIFFENERS

INTERIOR DIAPHRAGM @ PIER #4 (RADIAL)

NOTE: Bearing Diaphragm @ Pier #4 for Outside Box Shown, Looking Ahead Station.
Bearing Diaphragm @ Pier #4 for Inside Box Similar, Opposite Hand.

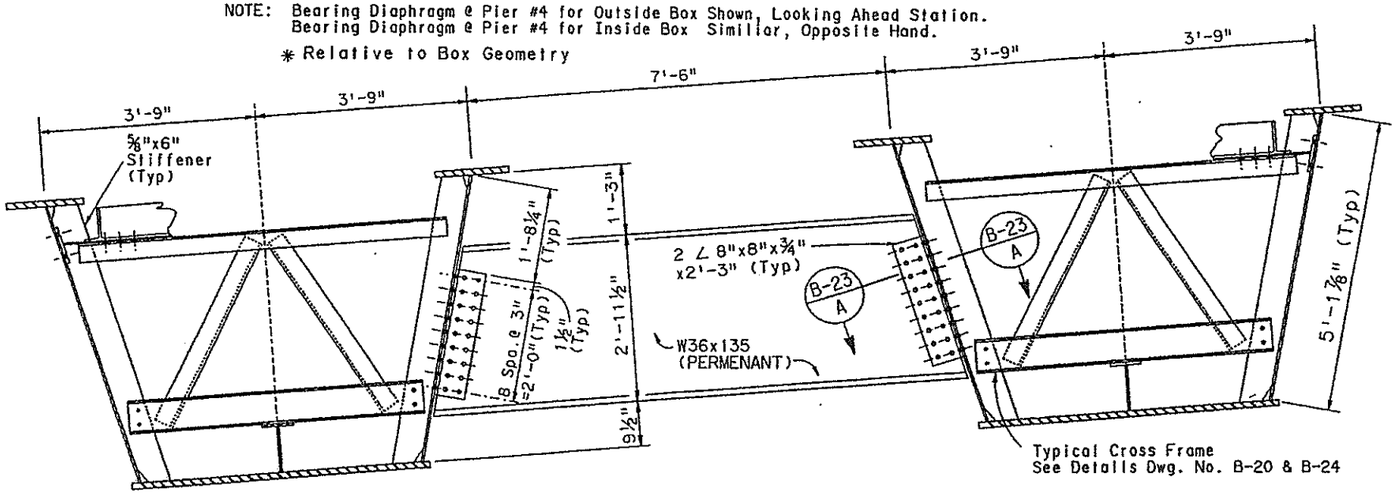

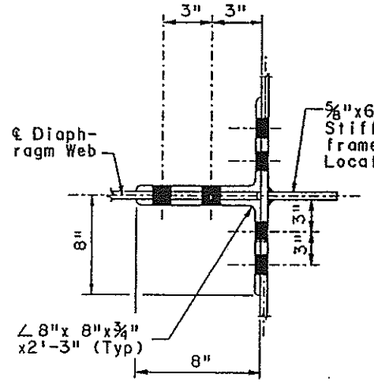

SECTION B-23 A

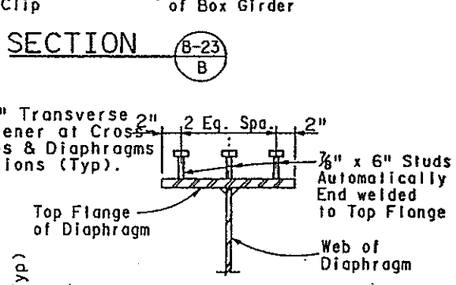

DETAIL "A"

SECTION B-23 B

CENTER DIAPHRAGM AT STA. 987+95.20, 5.00' LEFT AT PIER #4, (RADIAL)

E-470
Engineer 470 Partnership

DIVISION OF HIGHWAYS

I-25 / 470 INTERCHANGE
RAMP E FLYOVER.
INTERIOR DIAPHRAGM
DETAILS PIER #4

Designer A. GRIFFITH	Structure Numbers	F - 17 - JW	
Detailer G.Christnacht			
Drawing Number B-23	of	45	Drawings

USERNAME
S:\24\1\SQS\AM\KITA\161\SEDIA0313.90R

AS CONSTRUCTED									
NO REVISIONS		REVISED		VOID					

FEDERAL ROAD REGION NO.	DIVISION	PROJECT NUMBER	SHEET NUMBER
VIII	COLORADO	1A06/1802	134

REVISIONS			
- -			
- -			
- -			

INITIAL	DATE
AEG	1-90
JHP	1-90
GMC	1-90

Designed By	AEG	2-90
Checked By	JHP	2-90
Quantities By	JHP	2-90
Checked By	AEG	2-90
Detailed By		

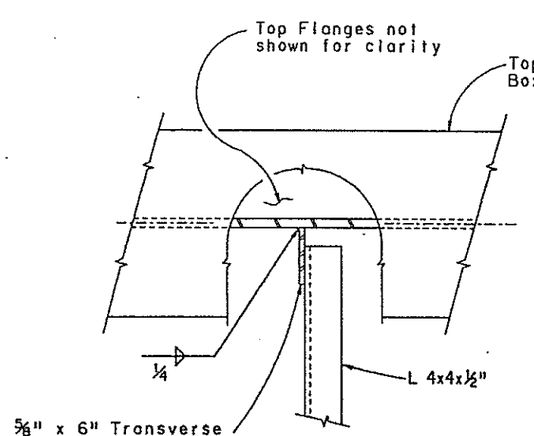

DETAIL B-15 A

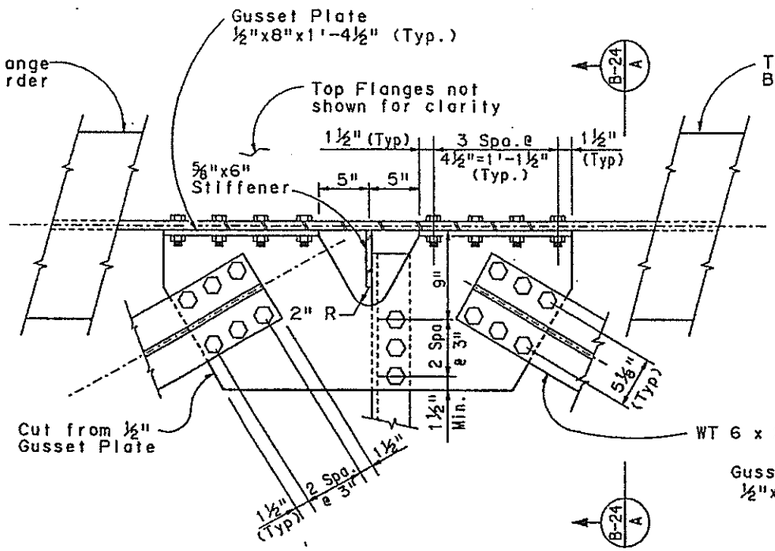

DETAIL B-15 B

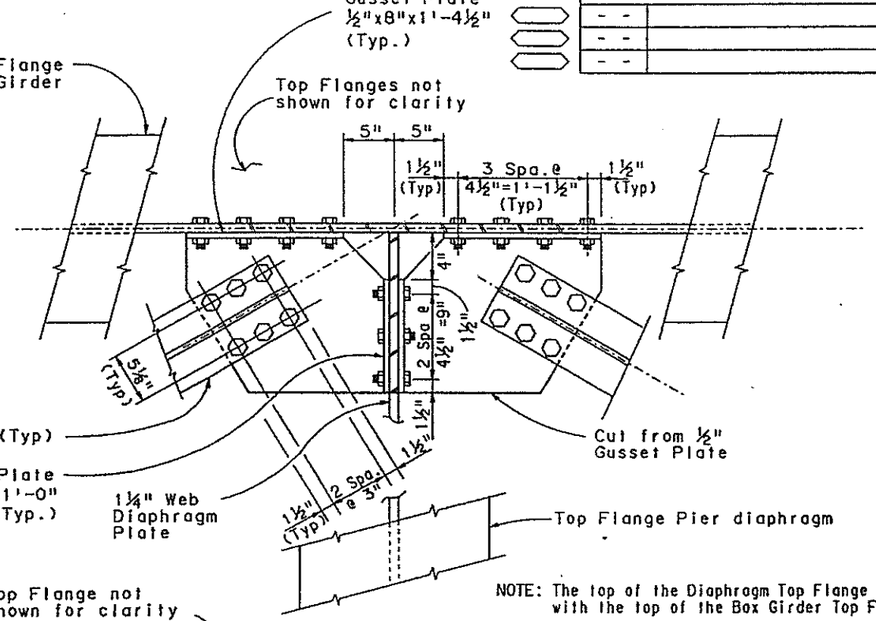

NOTE: The top of the Diaphragm Top Flange is flush with the top of the Box Girder Top Flange.

DETAIL B-15 C

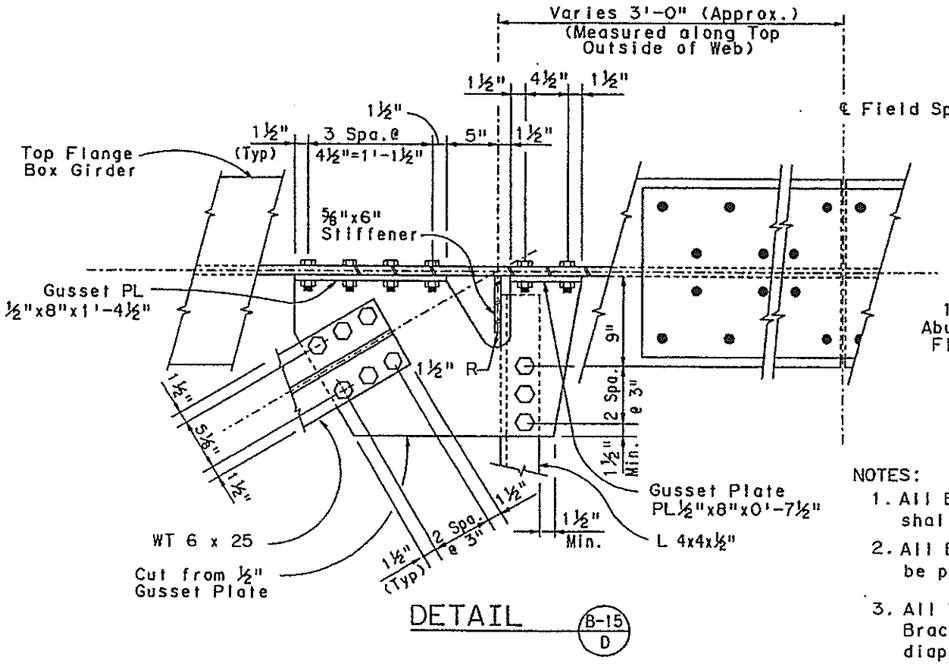

DETAIL B-15 D

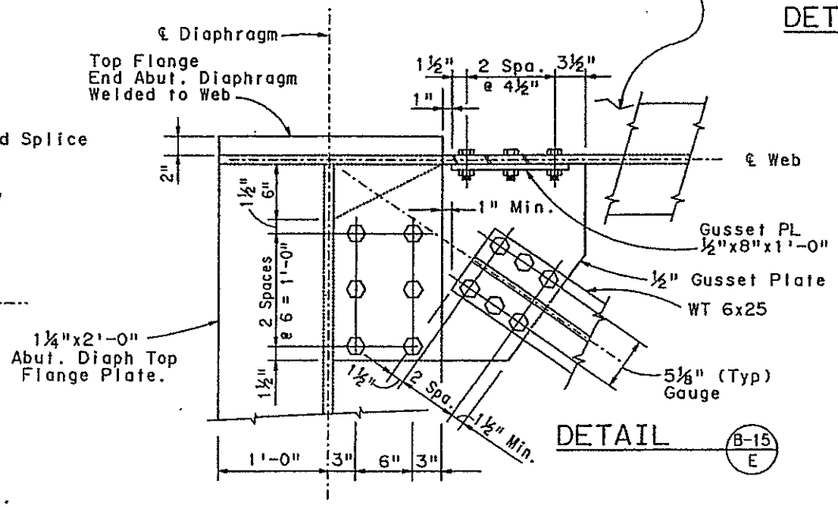

DETAIL B-15 E

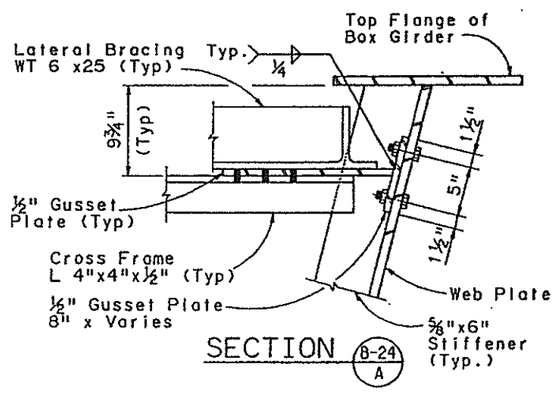

SECTION B-24 A

NOTES:

1. All Bolts for Diaphragms, Crossframes & Lateral Bracing shall be ⅞" diameter A-325 H.S. Bolts.
2. All Bolts attaching Gusset Plates to Box Girder Web shall be placed in pairs 5" apart, similar to as shown in SECTION B-24 A
3. All Transverse Web Stiffeners at Diaphragms, Crossframes & Lateral Bracing shall be ⅝" x6". At the Abutments and Piers a solid diaphragm plate shall be used.
4. The top of All ½" Gusset Plates for Lateral Bracing and Crossframes shall be A-36 Steel and Located 9¼" below bottom of the Box Girder Top Flange .

E-470
Engineer 470 Partnership

DIVISION OF HIGHWAYS

I-25/470 INTERCHANGE
RAMP E FLYOVER
LATERAL BRACING DETAILS

Designer A. Griffith	Structure Numbers	F - 17 - JW
Detailer A. Griffith		
Drawing Number B-24	of 45	Drawings

LATERAL BRACING DETAILS

SEDIA0413.90R

$$$$DGNSPEC
USERNAME
$$$$STIME

FEDERAL ROAD REGION NO.	DIVISION	PROJECT NUMBER	SHEET NUMBER
VIII	COLORADO	1A06/1802	135

AS CONSTRUCTED: NO REVISIONS ☐ REVISED ☐ VOID ☐

REVISIONS

FIELD SPLICE TYPICAL SECTION

SECTION (B-25 A)

PARTIAL PLAN TOP FLANGE

PARTIAL PLAN STIFFENER

SECTION (B-25 C)

Looking up from outside Box Girder

DETAIL (B-25 1)

DETAIL (B-25 2)

DETAIL (B-25 3)

SECTION (B-25 D)

Top Flange Filler Plate Table

Field Splice Number	Quantity per Location	Filler Plate Dimensions
F.S. #1	4	PL ⅝"x 1'-0" x 1'-10⅛"
F.S. #2	4	PL ⅝"x 1'-0" x 1'-10⅛"
F.S. #3	4	PL 1⅛"x 1'-0"x 1'-10⅛"
F.S. #4	4	PL 1⅛"x 1'-0"x 1'-10⅛"
F.S. #5	2	PL 1⅛"x 1'-0"x 1'-10⅛"
F.S. #6	2	PL 1⅛"x 1'-0"x 1'-10⅛"
F.S. #7	2	PL 1⅛"x 1'-0"x 1'-10⅛"
F.S. #8	2	PL 1⅛"x 1'-0"x 1'-10⅛"
F.S. #9	4	PL 1⅜"x 1'-0"x 1'-10⅛"
F.S. #10	4	PL 1⅜"x 1'-0"x 1'-10⅛"

Note:
Field Splice Number in table corresponds to "℄ F.S." shown on Framing plan Dwg. No. B-15 thru B-17. All filler plates shall be cut from single thickness as indicated in the table. Multiple layer fillers to reach required thickness shall not be permitted.

	INITIAL	DATE
Designed By	AEG	1-90
Checked By	DBW	1-90
Detailed By	AEG	1-90

Checked By	AEG	2-90
Quantities By	JHP	2-90
Checked By	JHP	2-90
Checked By	AEG	2-90

E-470 Engineer 470 Partnership

DIVISION OF HIGHWAYS

I-25/470 INTERCHANGE
RAMP E FLYOVER
FIELD SPLICE DETAILS
MISCELLANEOUS STEEL DETAILS

Designer A. Griffith | Structure Numbers F - 17 - JW
Detailer A. Griffith
Drawing Number B-25 of B-45 Drawings

$$$$DGNSPEC$$$$$$$$$$$$$$$$$ USERNAME $T24!!$QAE$$7$$61!SEFSMO113.90S

FIELD SPLICE DETAILS
SEFSMALT3.90E

AS CONSTRUCTED					
NO REVISIONS		REVISED		VOID	

FEDERAL ROAD REGION NO.	DIVISION	PROJECT NUMBER	SHEET NUMBER
VIII	COLORADO	1A06	136

REVISIONS			
A-1	4-02-90	Dimensions & Details	AEG
	- -		
	- -		

	INITIAL	DATE
Designed By	AEG	1-90
Checked By		
Detailed By	GMC	1-90
Quantities By		
Checked By		

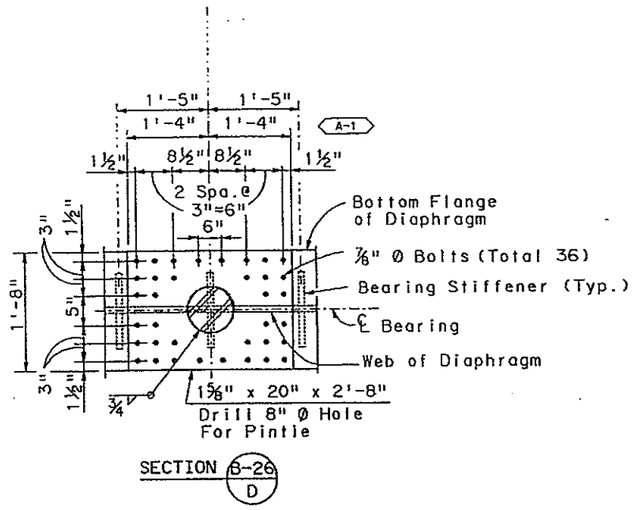

SECTION B-26 D

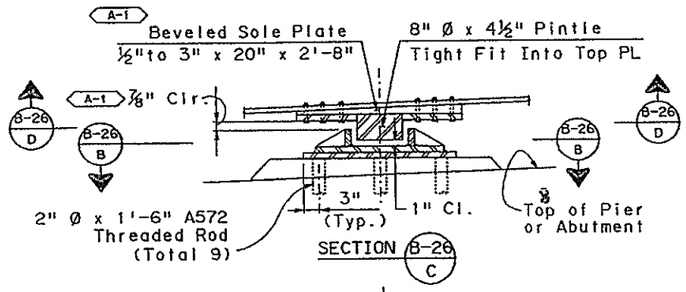

SECTION B-26 C

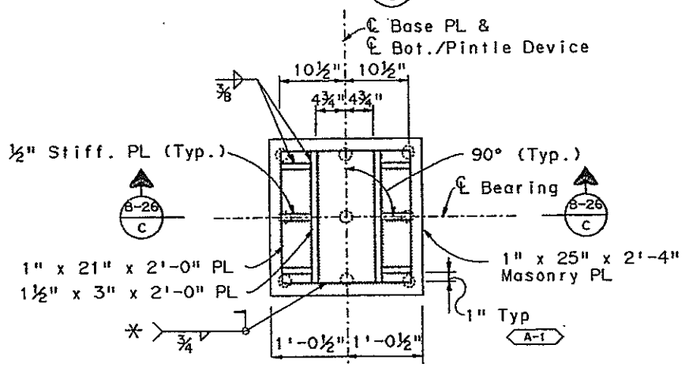

*Field Weld Bottom Pintle Device to Masonry Plate to Provide ¾" Clearance Between Pintle and Restrainer Plates.

SECTION B-26 B

PINTLE DETAILS ℄ EXPANSION

(Abutments #1 & #6, Pier #2)

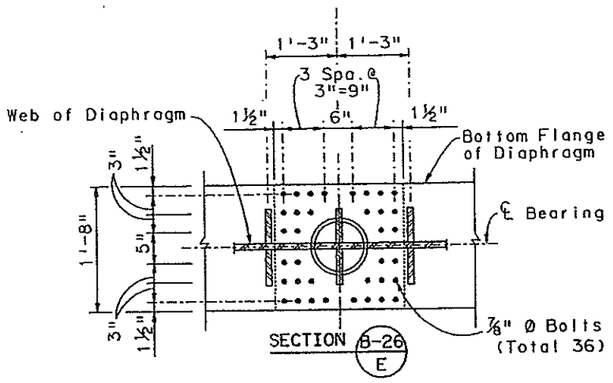

SECTION B-26 E

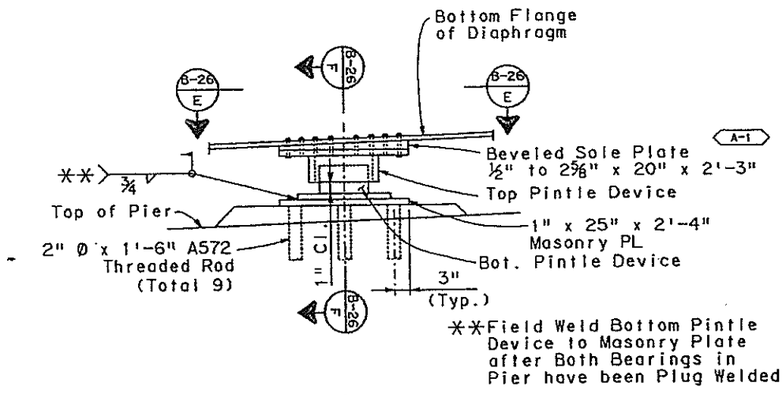

**Field Weld Bottom Pintle Device to Masonry Plate after Both Bearings in Pier have been Plug Welded

PINTLE DETAILS ℄ FIXED

(Piers #3 & #5)

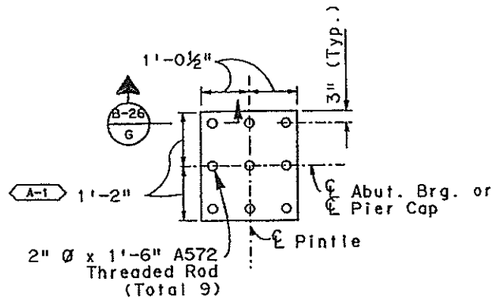

PLAN OF MASONARY PLATE

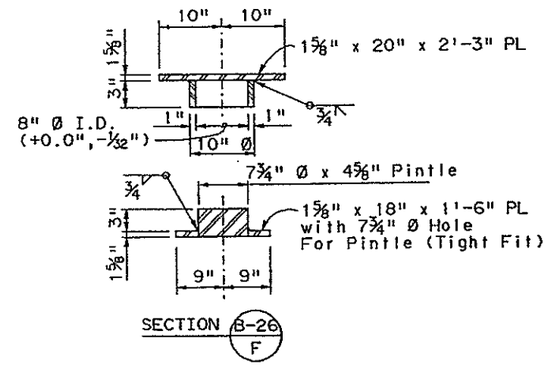

SECTION B-26 F

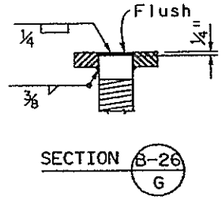

SECTION B-26 G

DIVISION OF HIGHWAYS

I-25/470 INTERCHANGE
RAMP E FLYOVER
PINTLE DETAILS

Designer A. Griffith		Structure Numbers	F - 17 - JW
Detailer G.Christnacht			
Drawing Number	B-26	of	45 Drawings

E-470
Engineer 470 Partnership

PINTLE DETAIL
SESSM0213.90

$$$$DONSPLC$$$$$$$$$$$$$$$$
USERNAME
$$$$$TIME$$$$$$

AS CONSTRUCTED					
NO REVISIONS		REVISED		VOID	

FEDERAL ROAD REGION NO.	DIVISION	PROJECT NUMBER	SHEET NUMBER
VIII	COLORADO	1A06/1802	137

REVISIONS			

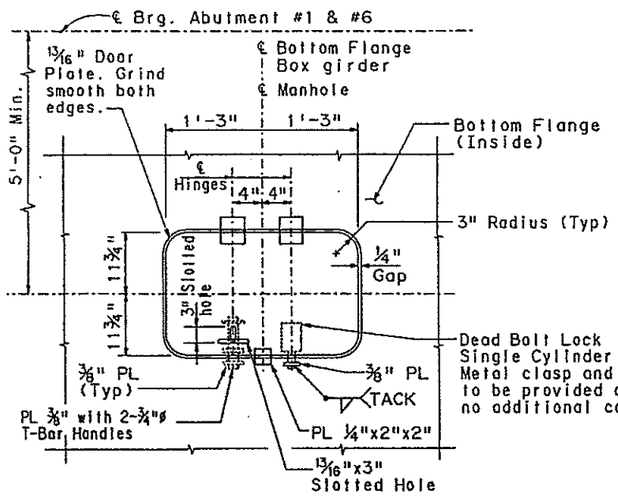

PLAN OF ACCESS MANHOLE IN BOTTOM FLANGE

Note:

1. For location of access Manholes, see framing Plans. Dwg. No. B-15 thru B-17. (4 total Required).
2. Steel for Manhole shall be ASTM A-36.

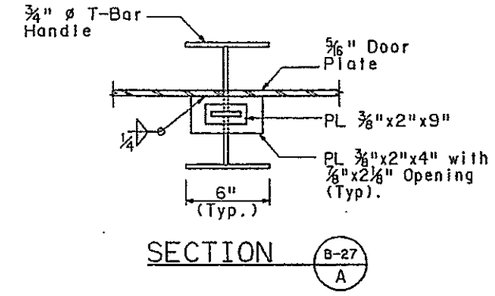

SECTION B-27 A

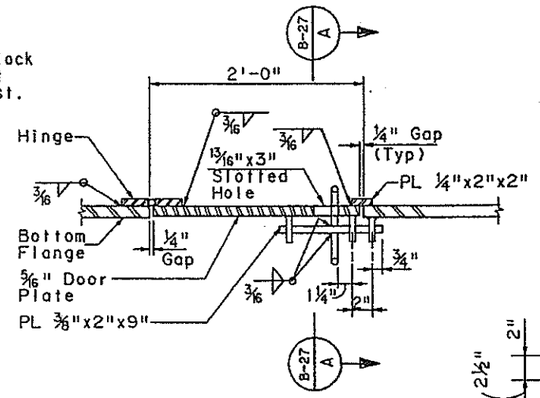

HINGE AND BOLT DETAIL

Note: To open manhole, lift up. (Hinge on inside).

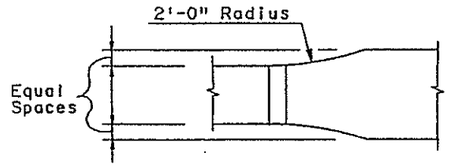

PLAN - WIDTH TRANSITION

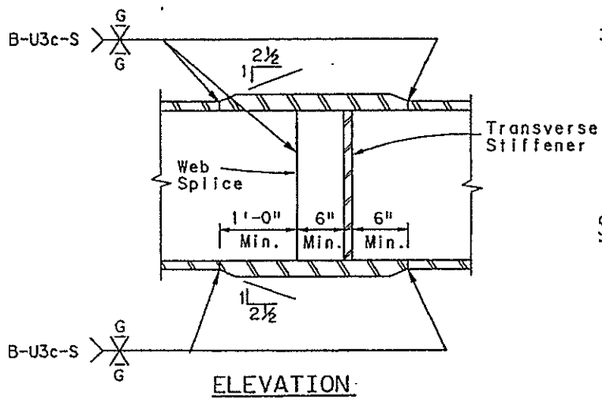

ELEVATION

SHOP SPLICE DETAIL

Note:

1. Grind flush all flange butt joints.
2. All groove welds in butt joints shall be ultrasonically tested as per Section 6.7 of ANSI/AASHTO/AWS D1.5-88.

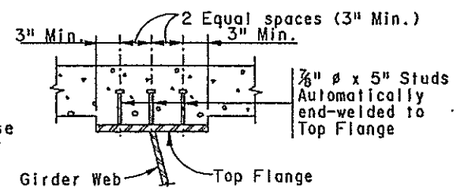

SHEAR CONNECTOR DETAILS

Note:

1. Steel for Shear connectors shall be AASHTO M-169 (ASTM A-108)
2. Each Row of Shear connectors consists of 3-⅞" ø studs each Top Flange.

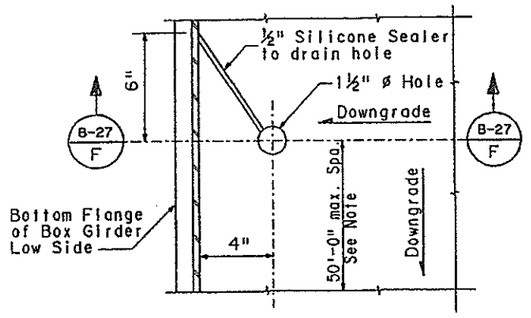

GIRDER DRAIN HOLE DETAILS

Note:

1. In Addition, provide drain holes at low points of box girder.
2. Place Silicone Sealer in field, prior to deck pour.

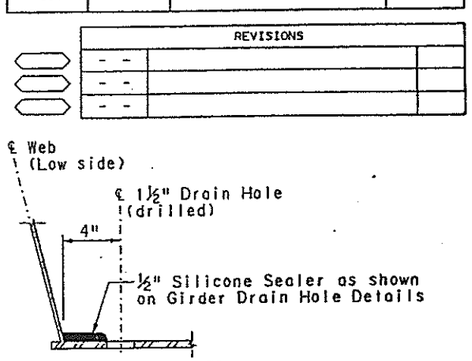

SECTION B-27 F

Note: 1. Clean steel before applying Silicone Sealer Compound. Compound subject to approval of engineer.

2. Silicone Sealer will not be paid for separately but shall be included in the cost of the work.

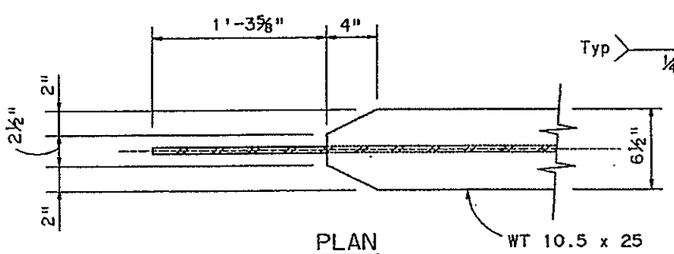

PLAN

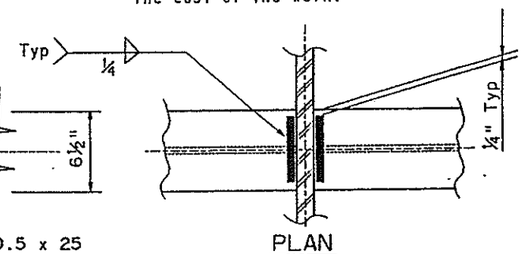

PLAN

Terminate Stiffener each side of Interior Diaphragm at Piers.

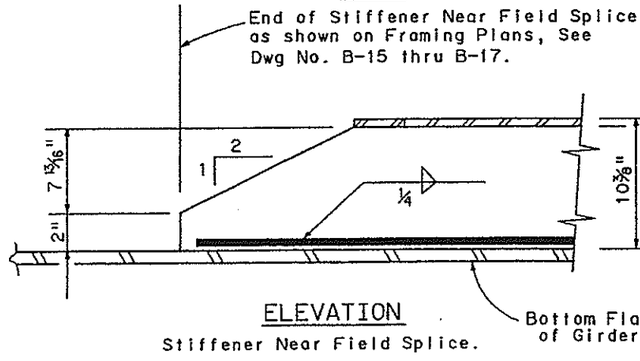

ELEVATION

Stiffener Near Field Splice.

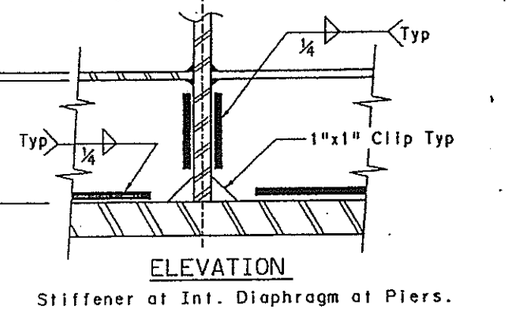

ELEVATION

Stiffener at Int. Diaphragm at Piers.

END OF BOTTOM FLANGE LONGITUDINAL STIFFENER DETAILS

Note: 1. Terminate weld ¼" from end.
Do not return weld around end of stiffener.

INITIAL	DATE
AEG	1-90
JHP	1-90
AEG	1-90

Designed By	AEG	Checked By	2-90
Checked By	JHP	Quantities By	2-90
Detailed By	AEG	Checked By	2-90

E-470

Engineer 470 Partnership

DIVISION OF HIGHWAYS

I-25 / 470 INTERCHANGE
RAMP E FLYOVER
ACCESS MANHOLE AND
MISCELLANEOUS STEEL DETAILS

Designer A. GRIFFITH		Structure Numbers	F - 17 - JW
Detailer A. GRIFFITH			
Drawing Number	B-27	of	45 Drawings

MISCELLANEOUS DETAILS

SESSMO113.90S

USERNAME = SESSMO113.90S
STRUCTURE = 1A06/1802

AS CONSTRUCTED					
NO REVISIONS		REVISED		VOID	

FEDERAL ROAD REGION NO.	DIVISION	PROJECT NUMBER	SHEET NUMBER
VIII	COLORADO	1A06/1802	138

REVISIONS			
- -			
- -			
- -			

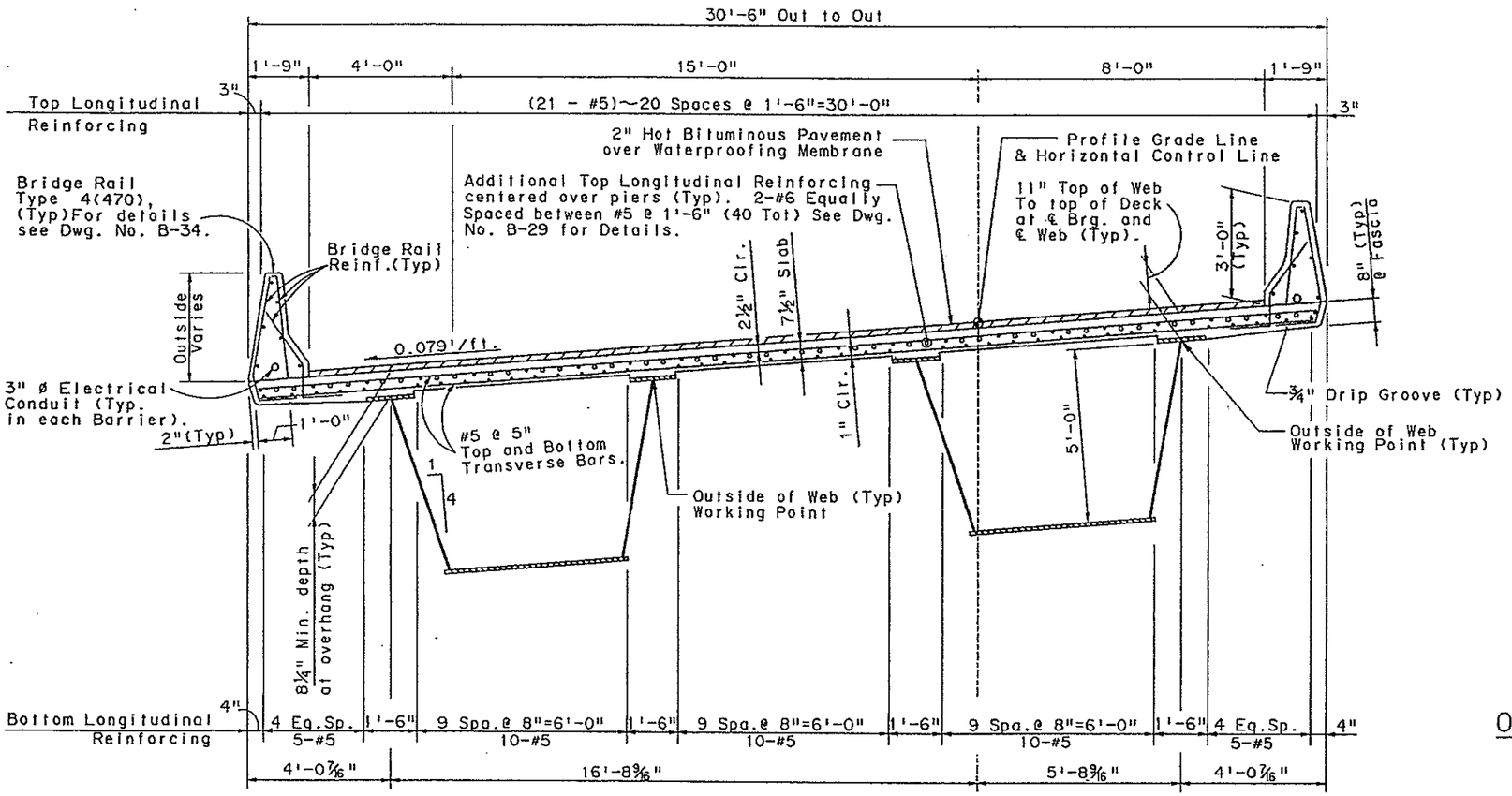

TYPICAL SECTION

Notes:

1. Deck concrete shall be Concrete, Class D (Bridge).
2. Permanent Deck forms are not permitted in the cantilever portions of the Deck Slab.
3. All Cost of additional Material & Labor required to use permanent Deck Forms shall be included in the Work.
4. Section is taken along a Radial Line. Transverse Reinforcing (shown here) is spaced Radially and measured along centerline of bridge, (5.00' Lt. of H.C.L.).
5. #5 Top & Bottom Longitudinal reinforcing shall be continuous over piers; (No rebar splices permitted within 17'-6" each side of Pier centerline).
6. See Additional Reinforcing Details and Notes See Dwg. No. B-29 and B-30.
7. For Bridge Rail Reinforcing extended into deck, See Dwg No. B-34
8. For Reinforcing at Bridge Drain locations, see Details, Dwg. No. B-37 & B-38.

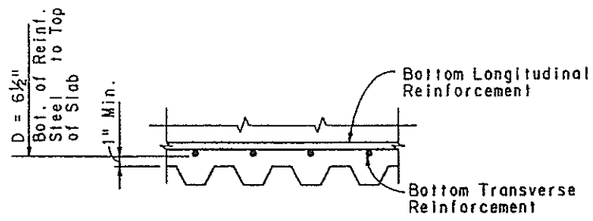

PERMANENT DECK FORM DETAIL

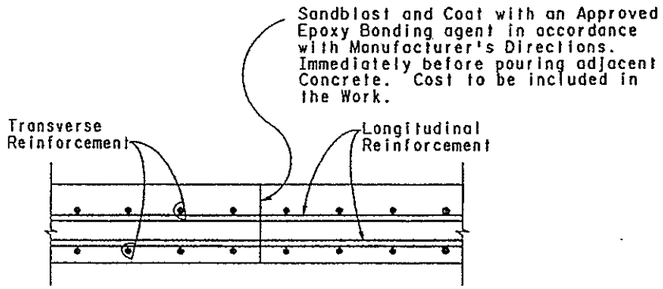

OPTIONAL CONSTRUCTION JOINT DETAIL

INITIAL	DATE	
AEG	1-90	Designed By
JWP	1-90	Checked By
JWP	1-90	Quantities By
AEG	1-90	Checked By

AEG	2-90	
JWP	2-90	
JWP	2-90	
AEG	2-90	

E-470

Engineer 470 Partnership

DIVISION OF HIGHWAYS

I-25/470 INTERCHANGE
RAMP E FLYOVER
DECK REINFORCEMENT DETAILS

Designer A. Griffith	Structure Numbers	F - 17 - JW
Detailer A. Griffith		
Drawing Number B-28 of 45 Drawings		

USERNAME
ST2411505(1350)1724)1611SETYS0113 908

AS CONSTRUCTED					
NO REVISIONS		REVISED		VOID	

FEDERAL ROAD REGION NO.	DIVISION	PROJECT NUMBER	SHEET NUMBER
VIII	COLORADO	1A06/1802	139

REVISIONS		
- -		
- -		
- -		

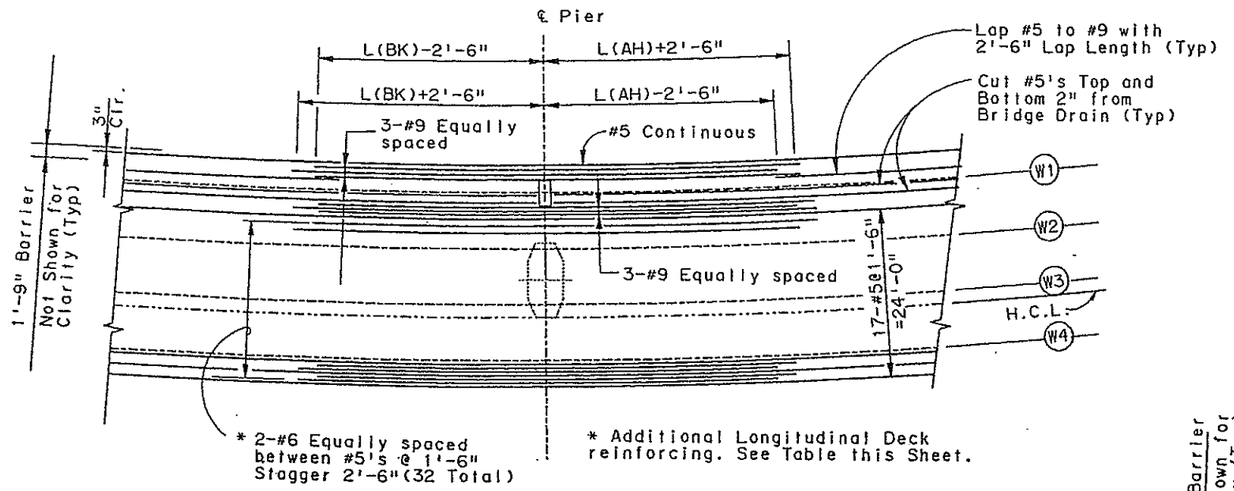

DECK PLAN PIER #3 & #5

Top Reinforcement Shown

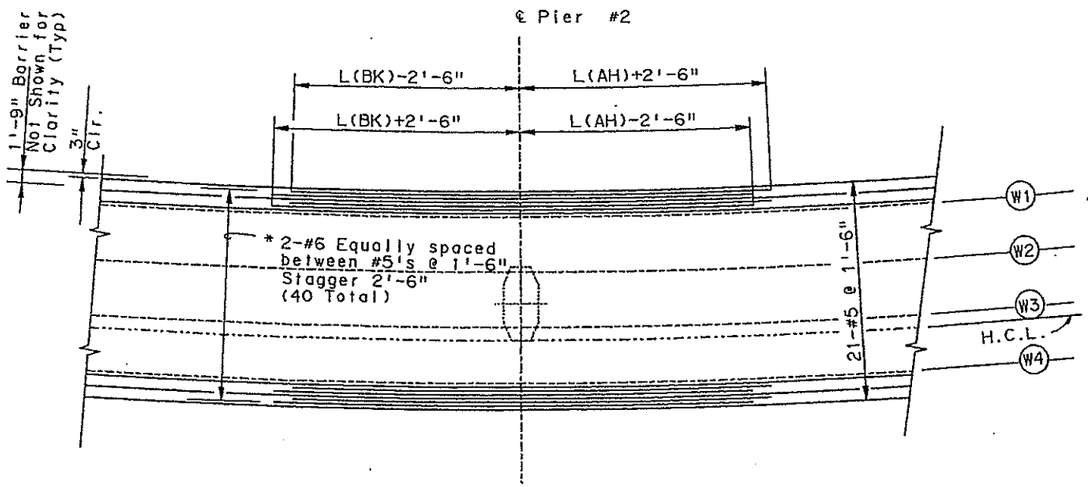

* Additional Longitudinal Deck reinforcing. See Table this Sheet.

DECK PLAN PIER #2

Top Reinforcement Shown

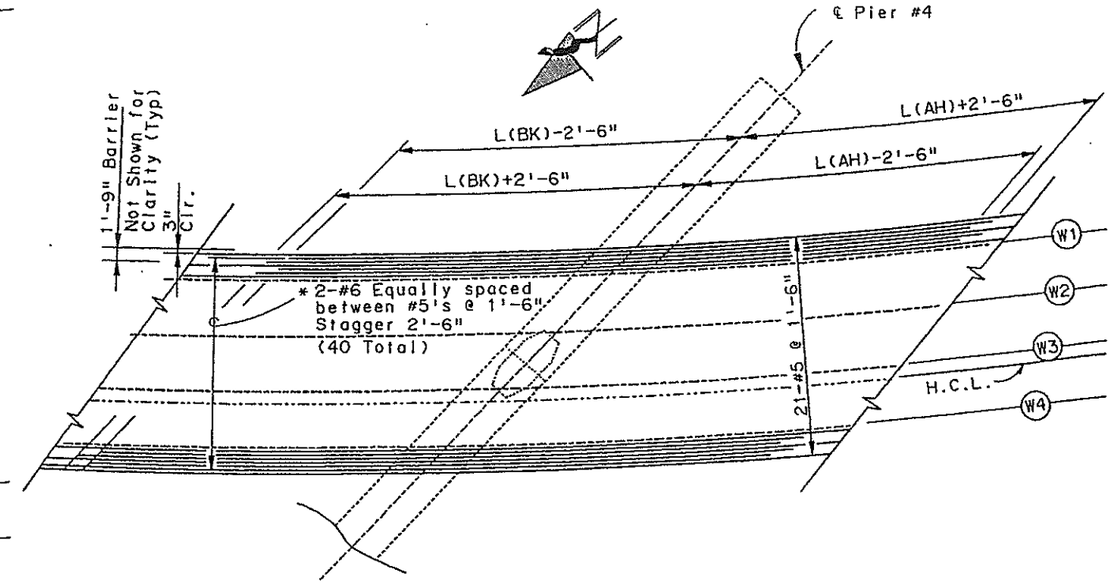

DECK PLAN PIER #4

Top Reinforcement Shown

* Additional Longitudinal Deck reinforcing. See Table this Sheet.

ADDITIONAL LONGITUDINAL DECK REINFORCEMENT AT PIERS				
PIER	NUMBER	SIZE	L(BK)	L(AH)
Pier #2	40	#6	30'-0"	30'-0"
Pier #3	32	#6	36'-0"	34'-0"
	6	#9	36'-0"	34'-0"
Pier #4	40	#6	40'-0"	40'-0"
Pier #5	32	#6	34'-0"	37'-0"
	6	#9	34'-0"	37'-0"

NOTES:

1. All Transverse Reinforcing shall be placed perpendicular (Radially) to the centerline of bridge (5'-0" left of H.C.L.).The spacing shown on Dwg. No. B-28 for the #5 @ 5" Top & Bot. are along centerline of bridge.
2. Additional reinforcing over piers (#6's and #9's top longitudinal bars) & #5 Top & Bot. longitudinal reinforcing shall be continuous over piers (No rebar splices permitted 17'-6" each side of pier centerlines). Number and location of other Splices not shown on plans, shall be approved by the Engineer.
3. Lap Splices shall be staggered 2'-6" Minimum.
4. 24 hours minimum required between concrete deck pours.
5. For Bridge rail Reinforcing extended into deck, See Dwg. No. B-34.
6. Work this drawing with Bridge Drain Reinforcing Details, See Dwg. No. B-37 and B-38.

	INITIAL	DATE		
Designed By	AEG	1-90	Checked By	AEG 2-90
Checked By	DBW	1-90	Quantities By	DBW 2-90
Detailed By	AEG	1-90	Checked By	JHP 2-90
				DBW 2-90

$$$$$DGNSPEC$$$$$$$$$$$$$$$$$$$$
USERNAME
$$$$$SYTIME$$$$$$

E-470

Engineer 470 Partnership

DIVISION OF HIGHWAYS

I-25 / 470 INTERCHANGE
RAMP E FLYOVER

DECK REINFORCEMENT DETAILS

Designer A. GRIFFITH		Structure Numbers	F - 17 - JW
Detailer A. GRIFFITH			
Drawing Number	B-29	of	45 Drawings

DECK REINFORCEMENT DETAILS SHT 2

SEDKS0113.90N

AS CONSTRUCTED					
NO REVISIONS		REVISED		VOID	

FEDERAL ROAD REGION NO.	DIVISION	PROJECT NUMBER	SHEET NUMBER
VIII	COLORADO	1A06	140

A-1	4-02-90	Dimensions @ Blockout & Notes	AEG

	INITIAL	DATE		
Designed By	AEG	1-90	Checked By	AEG 3-90
Checked By	OBM	1-90	Quantities By	JHP 3-90
Detailed By	AEG	1-90	Checked By	OBM 3-90

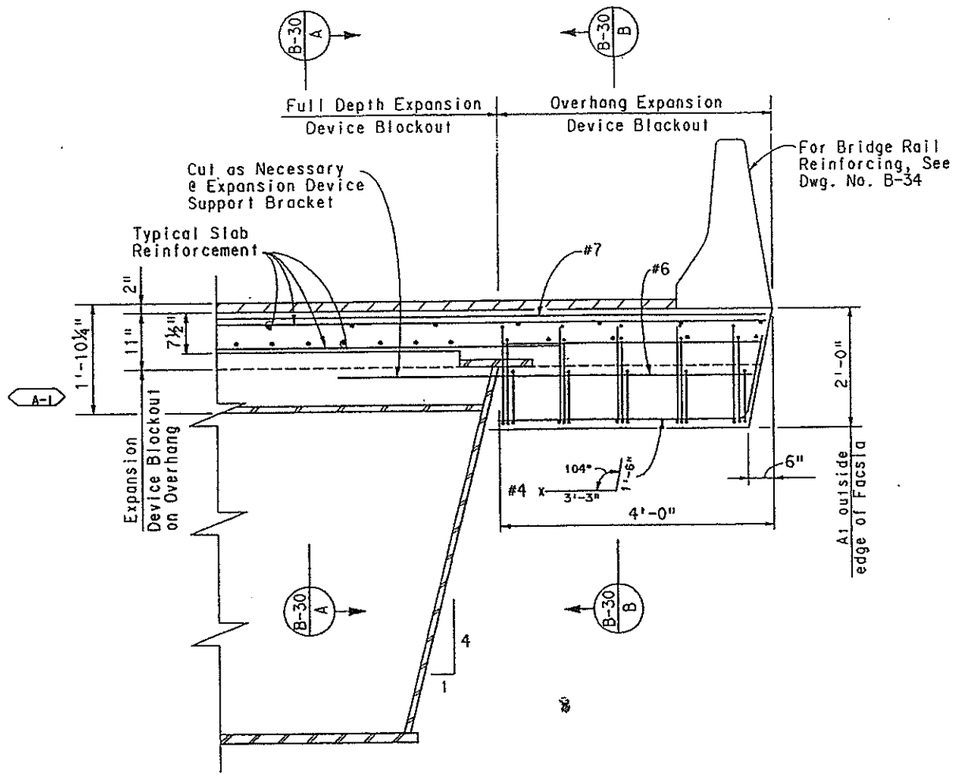

SECTION AT EXPANSION DEVICE

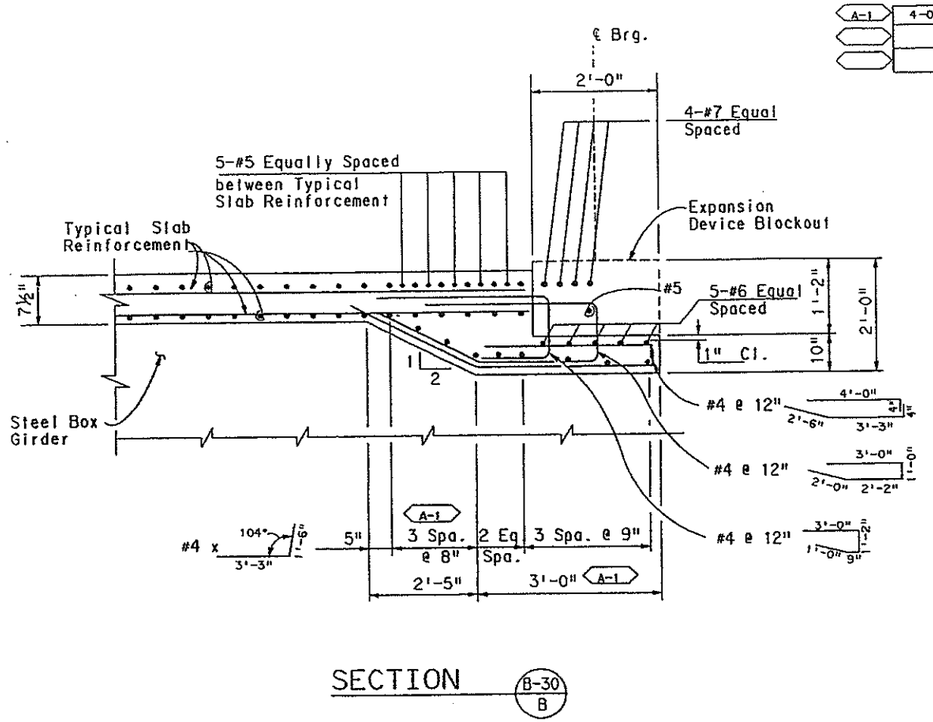

SECTION B-30 B

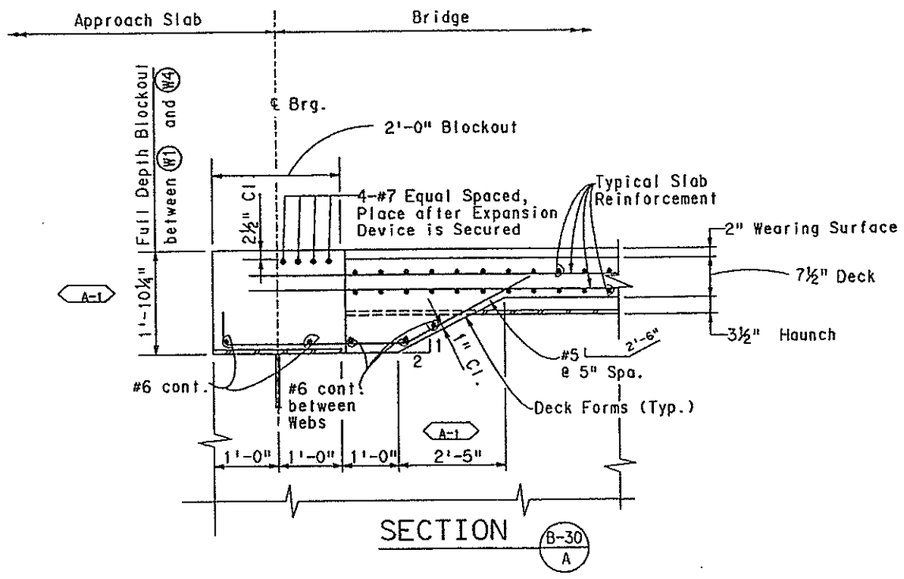

SECTION B-30 A

A-1 NOTES:

1. All dimensions transverse to bridge are measured along the cross slope of bridge.
2. Expansion Device Blockout/Closure shall be Concrete Class D (Bridge).
3. For Expansion Device Details, See Dwg. No. B-32 & B-33.

E-470

Engineer 470 Partnership

DIVISION OF HIGHWAYS

I-25 / 470 INTERCHANGE
RAMP E FLYOVER
DECK REINFORCEMENT DETAILS
AT EXPANSION DEVICE

Designer A. GRIFFITH	Structure Numbers	F - 17 - JM	
Detailer A. GRIFFITH			
Drawing Number B-30	of	45	Drawings

DECK REINFORCEMENT AT EXP. DEVIC

SEDKS0213.9C

AS CONSTRUCTED					
NO REVISIONS		REVISED		VOID	

FEDERAL ROAD REGION NO.	DIVISION	PROJECT NUMBER	SHEET NUMBER
VIII	COLORADO	1A06	141

	REVISIONS		
A-1	4-02-90	Construction Sequence Note #1	AEG
	- -		
	- -		

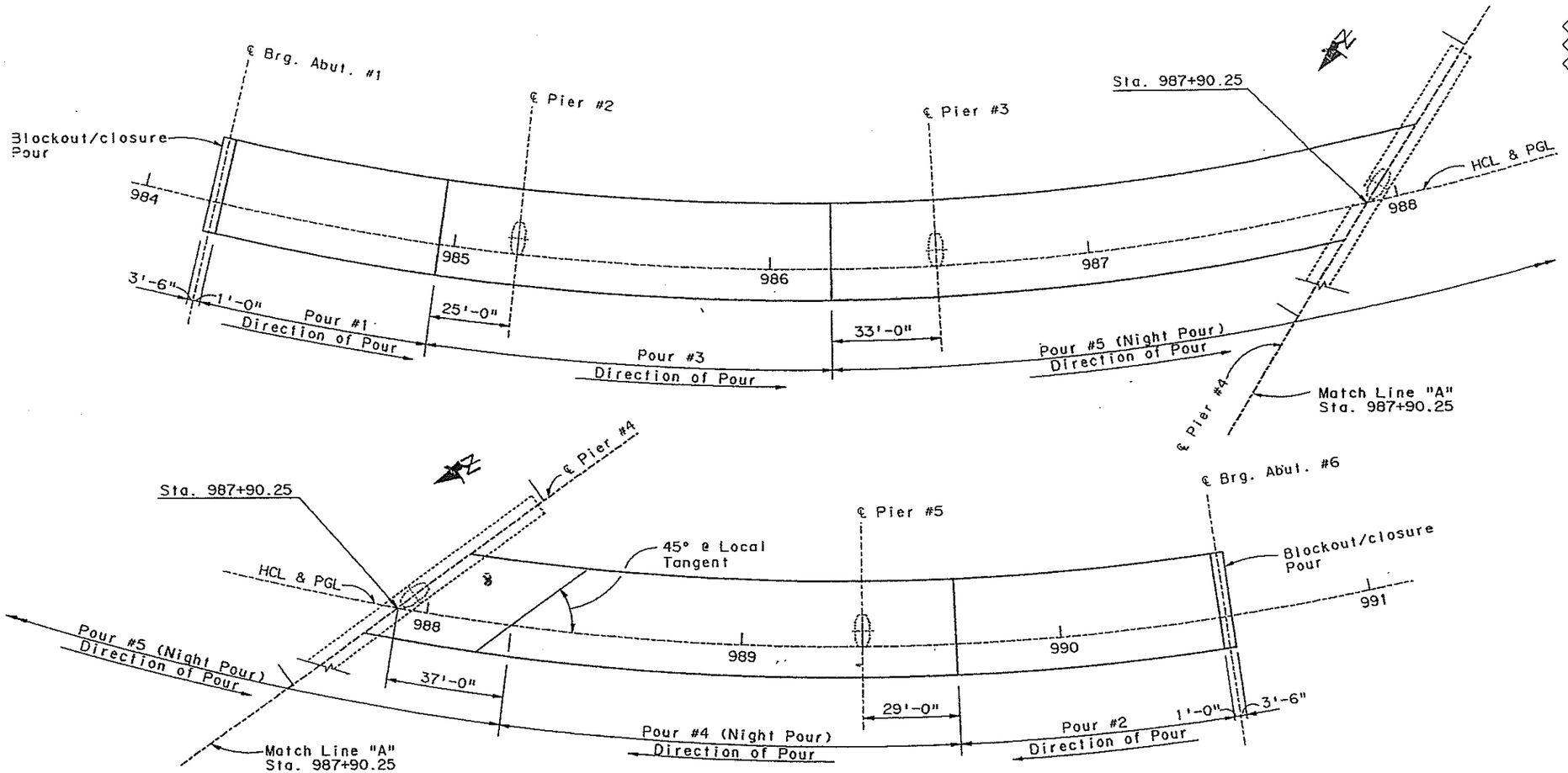

CONSTRUCTION SEQUENCE:

A-1

1. Pier #4 Column and cap shall be constructed in a manner to minimize the time required for temporary lane closures on I-25.
2. Erection of box girders and splicing of girders above I-25 and E-470 shall be limited to off-peak night hours, as per Special Provisions.
3. Deck slab to be poured according to slab pouring sequence shown in this drawing and the Special Provisions.
4. Temporary cross frames & costruction bracing shall not be removed before the entire concrete slab has obtained its 28-day strength.
5. Deck concrete shall not be placed until the entire superstructure has been erected, all field bolts torqued, and all bearing device plug welds are complete.

POURING SCHEDULE

NOTE:
Place Concrete in the Sequence Shown. Placements Over Existing Ramps and Over I-25 and E-470 Shall be at Night.

Dimensions shown are Measured along Horizontal Control Line

	INITIAL	DATE
Designed By	AEG	2-90
Checked By	JHP	2-90
Quantities By	JHP	2-90
Checked By	AEG	2-90
Detailed By	AEG	1-90
Checked By	JHP	1-90
Designed By	AEG	1-90

E-470
Engineer 470 Partnership

DIVISION OF HIGHWAYS

I-25 / 470 INTERCHANGE
RAMP E FLYOVER
CONCRETE PLACEMENT SEQUENCE

Designer A. Griffith	Structure Numbers	F - 17- JW
Detailer A. Griffith		
Drawing Number 8-31 of 45 Drawings		

AS CONSTRUCTED					
NO REVISIONS		REVISED		VOID	

FEDERAL ROAD REGION NO.	DIVISION	PROJECT NUMBER	SHEET NUMBER
VIII	COLORADO	1A06/1802	142

REVISIONS		
- -		
- -		
- -		

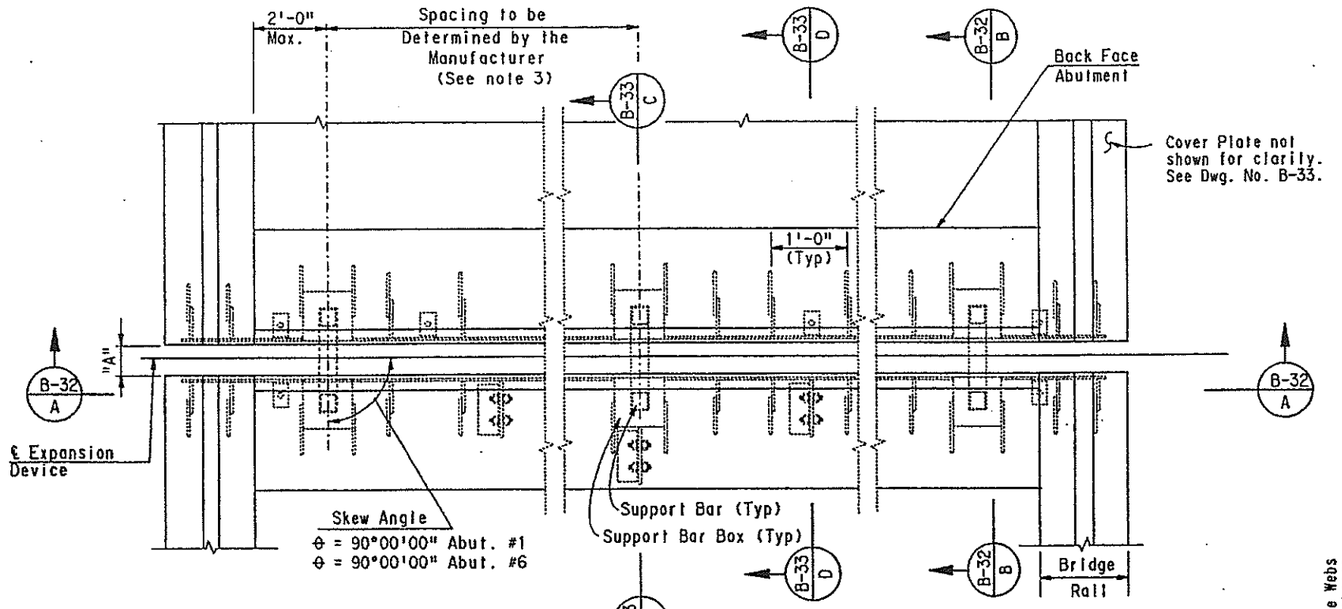

PLAN

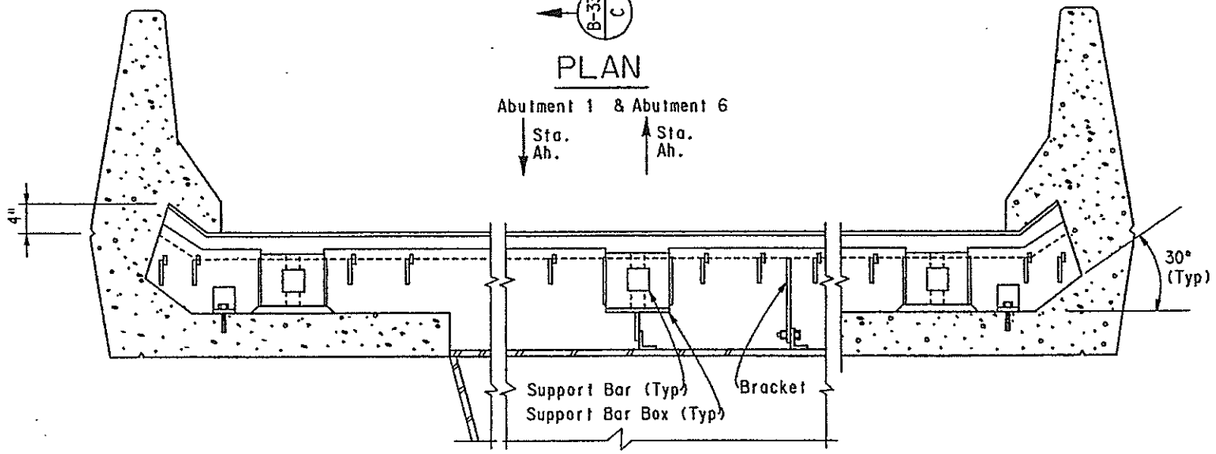

SECTION B-32 A

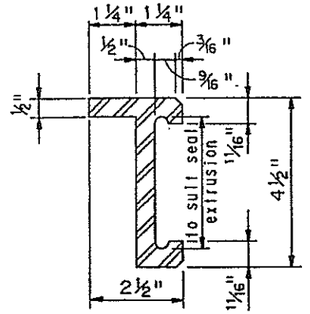

EDGE BEAM

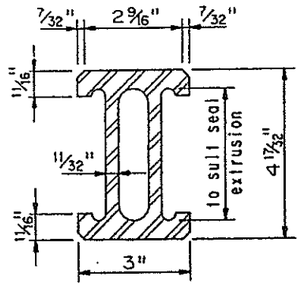

SEPARATION BEAM

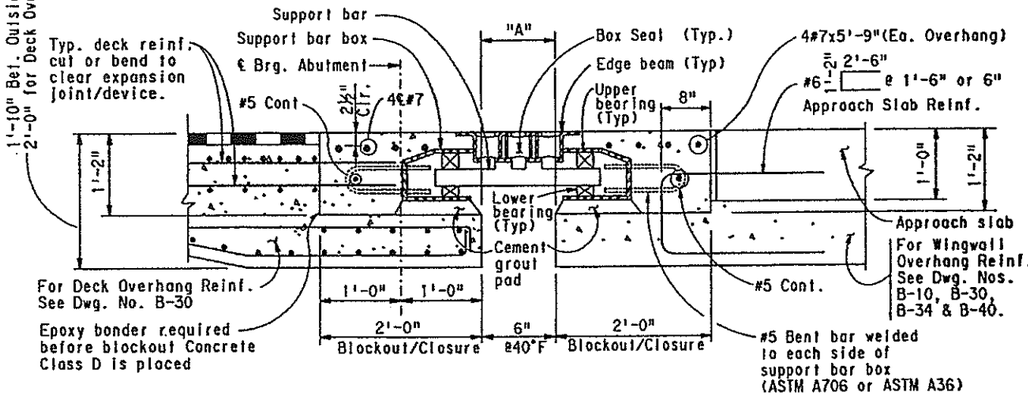

SECTION AT OVERHANG B-32 B

NOTE:
Expansion Device (0-6 Inch) is shown.

NOTES:

1. Work this drawing with Dwg. No. B-33.
2. Acceptable expansion device alternates:
   At Abutment 1: Wabo-Maurer D-600 or Maurer D.S. Brown D-161.
   At Abutment 6: Wabo-Maurer D-600 or Maurer D.S. Brown D-161.
3. Avoid Diaphragm Top Flange Splice Plates near Web 2 and Web 3. See Dwg. No. B-21 for locations.
4. Location and size of support bars, anchor assembly, anchor angle, bracket for attachment to steel and stiffener plates shall be per manufacturer's drawings.
5. The neoprene box seals shall be supplied and installed in one continuous piece.
6. For Dimension "A" see Dwg. No. B-33.
7. "A" dimensions are dependent upon the particular expansion device supplied and shall be shown on the shop drawings. The shop drawings shall indicate the "A" dimensions at a range of temperatures from 30°F to 100°F assuming a mid-point temperature of 40°F.
8. The expansion device shall be installed on grade, parallel to the slope and grade of the deck.
9. After the concrete has attained initial set, any temporary attachments used to hold the expansion device assembly in its proper position shall be removed.
10. Cover plates for Bridge Rail are not shown for clarity. Refer to Dwg. No. B-33.

INITIAL	DATE	
AEG	1-90	Designed By
MRM	1-90	Checked By
GMC	1-90	Detailed By
AEG	2-90	Checked By
DBW	2-90	Quantities By
JHP	2-90	Checked By

E-470
Engineer 470 Partnership

DIVISION OF HIGHWAYS

I-25 / 470 INTERCHANGE
RAMP E FLYOVER
BRIDGE EXPANSION DEVICE
(0-6 INCH)

Designer A. Griffith	Structure Numbers	F - 17 - JW
Detailer G.Christinacht		
Drawing Number B-32 of 45 Drawings		

$$$$DONSPEC$$$$$$$$$$$$$$$$
USERNAME
S:\2441\SQ\ABE\1241161\SEEXP0213.90U

AS CONSTRUCTED					
NO REVISIONS		REVISED		VOID	

FEDERAL ROAD REGION NO.	DIVISION	PROJECT NUMBER	SHEET NUMBER
VIII	COLORADO	1A06/1802	143

REVISIONS		
- -		
- -		
- -		

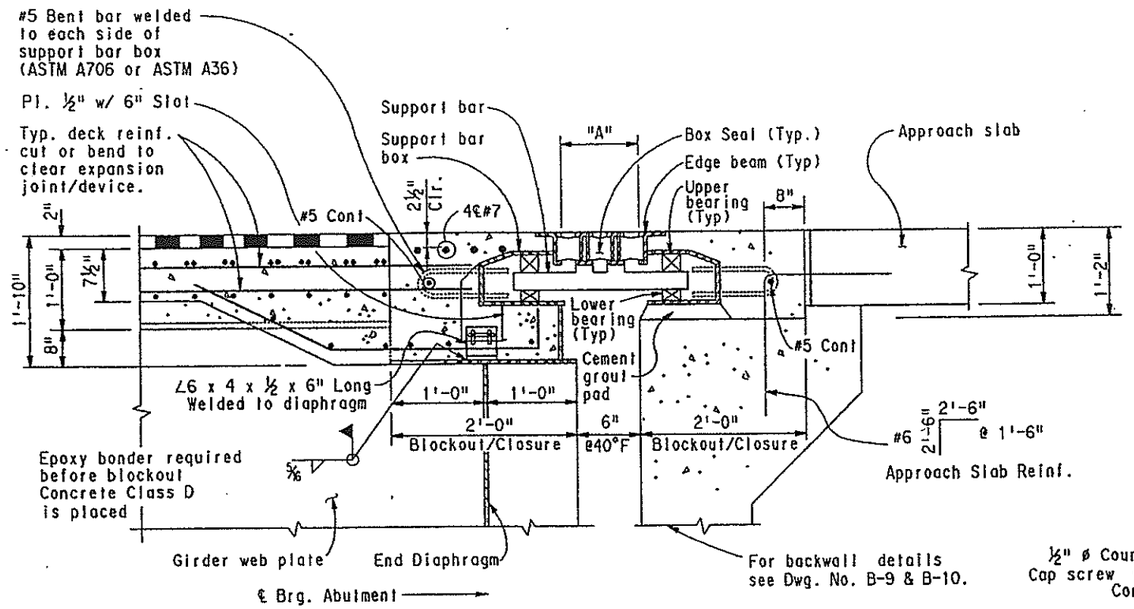

SECTION B-32 C
AT STEEL DIAPHRAGM

NOTE:
Exp. Dev. (0-6 Inch) is shown.

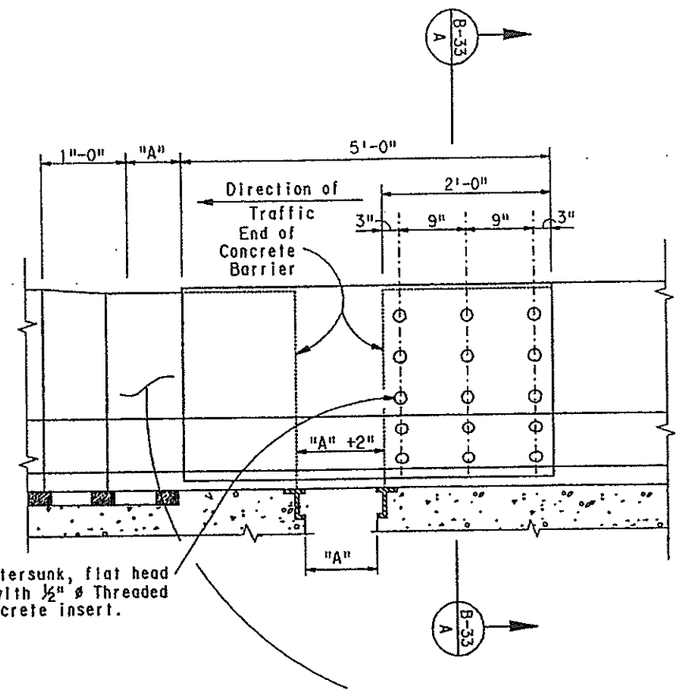

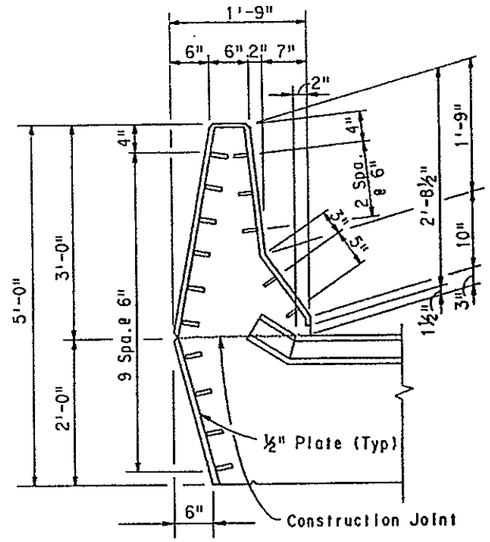

SECTION B-33 A

ELEVATION (RIGHT RAIL SHOWN)

Inside face of Bridge Rail Cover Plate Shown,
Outside lonngitudinal spacing similiar.
Right Rail Shown, Left Rail similiar, opposite hand.
Cover Plate at Abut.#1 Shown, Abut.#6 similiar.
Provide vent holes on top of Cover Plates.

NOTES FOR COVER PLATES :
1. Cover Plates and related work shall not be paid for separately, but shall be included in payment for item 518.
2. Cover Plate assembly shall be galvinized after fabrication.
3. Cover Plates require colored coating, See specifications.

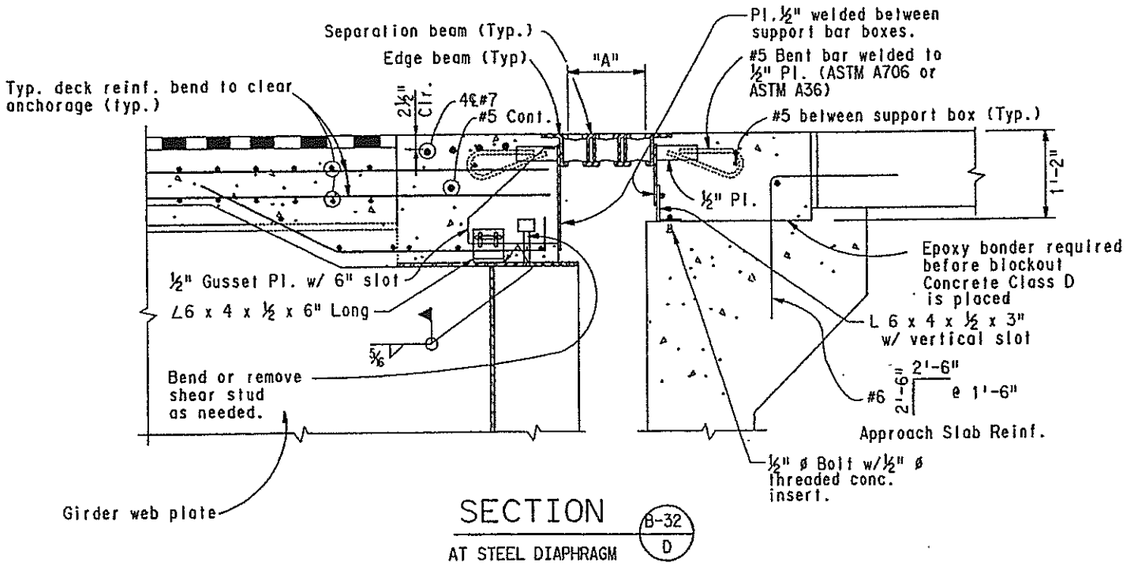

SECTION B-32 D
AT STEEL DIAPHRAGM

Dimension "A"		
STRUCTURE TEMP.	ABUTMENT 1	ABUTMENT 6
30° F.	6 5/16"	6 3/16"
40° F.	6"	6"
50° F.	5 11/16"	5 13/16"
60° F.	5 7/16"	5 5/8"
70° F.	5 1/8"	5 3/8"
80° F.	4 13/16"	5 3/16"
90° F.	4 9/16"	5"
100° F.	4 1/4"	4 13/16"

E-470
Engineer 470 Partnership

DIVISION OF HIGHWAYS
I-25 / 470 INTERCHANGE
RAMP E FLYOVER
BRIDGE EXPANSION DEVICE
(0-6 INCH)

Designer A. Griffith	Structure Numbers	F - 17 - JW
Detailer A. Griffith		
Drawing Number B-33 of 45 Drawings		

	INITIAL	DATE			
Designed By	AEG	2-90	Checked By	AEG	3-1-90
Checked By	MRM	2-90	Quantities By	DBW	3-1-90
Detailed By	AEG	2-90	Checked By	JHP	3-90
				AEG	3-90

USERNAME
SV24445(SUSAN)(74)(61)SERAL0213.90V

bridge expansion device sht 2

SERAL0213.90

AS CONSTRUCTED					
NO REVISIONS		REVISED		VOID	

FEDERAL ROAD REGION NO.	DIVISION	PROJECT NUMBER	SHEET NUMBER
VIII	COLORADO	1A06	144

	REVISIONS		
A-1	4-02-90	Details, Dimen, Pay Length	AEG
	- -		
	- -		

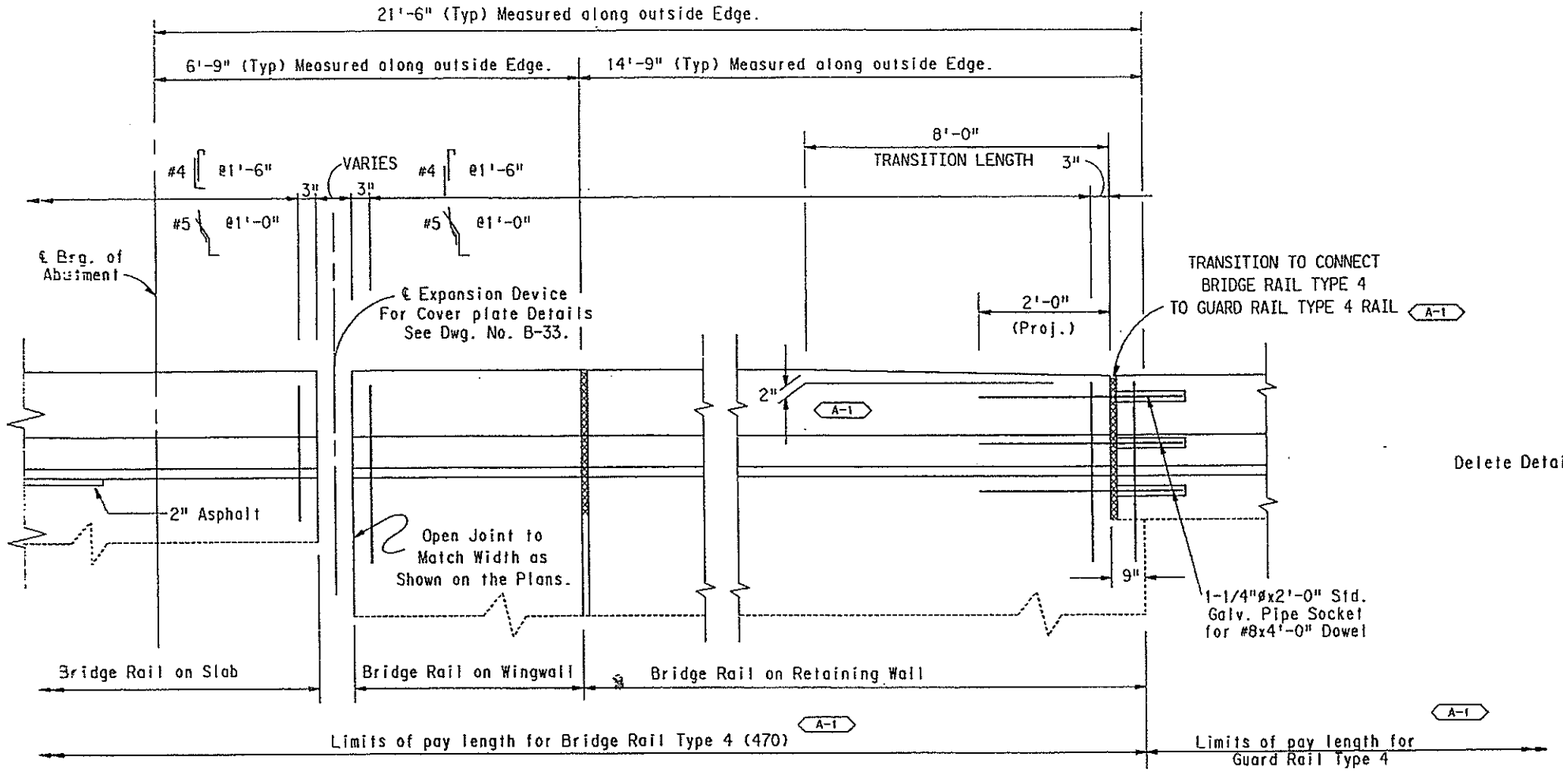

Delete Detail for Guard Rail
A-1

NOTES:

Back fill wingwalls and retaining walls before barrier is placed.

All bridge rail concrete shall be Concrete Class D.

Longitudinal reinforcement shall stop at all expansion joints.

Bridge rail shall be constructed plumb, as shown.

Bridge rail Concrete Class D and reinforcement located entirely above the Construction Joint, shall be included in Item No. 606, Bridge Rail Type 4 (470).

For Guard Rail Type 4, see Std. M-606-12 for details.

For Guard Rail Type 3, see Std. M-606-12 for details of transition and attachment to concrete barrier. See Std. M-606-1 for details of Guard Rail.

DESIGN DATA

Concrete Class D : f'c = 4500 psi at 28 days
fc = 1800 psi, n = 8
Reinforcing Steel : fy = 60,000 psi
fs = 24,000 psi

ELEVATION

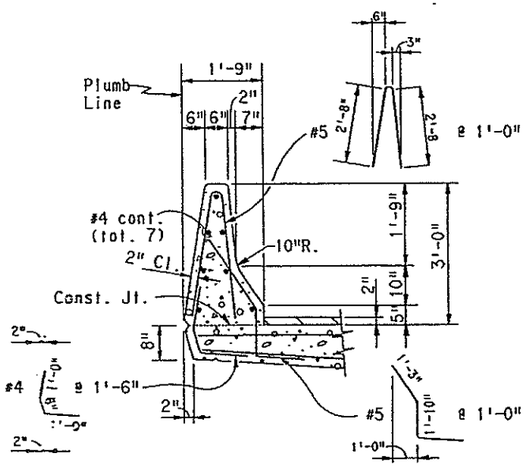

ON CONCRETE SLAB WITH ASPHALT

See Details Dwg. No. B-29 for Reinforcing & Expansion Device.

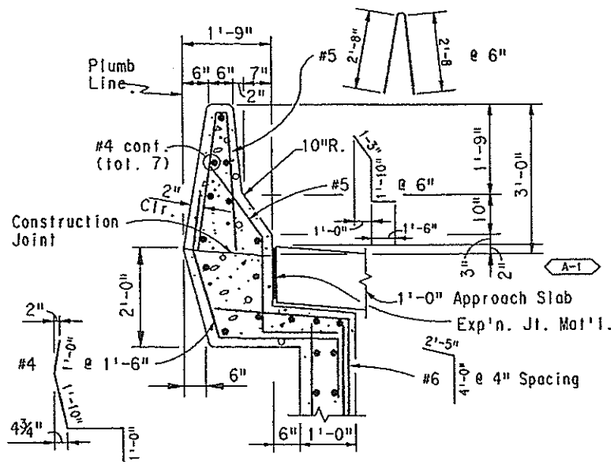

ON WINGWALL

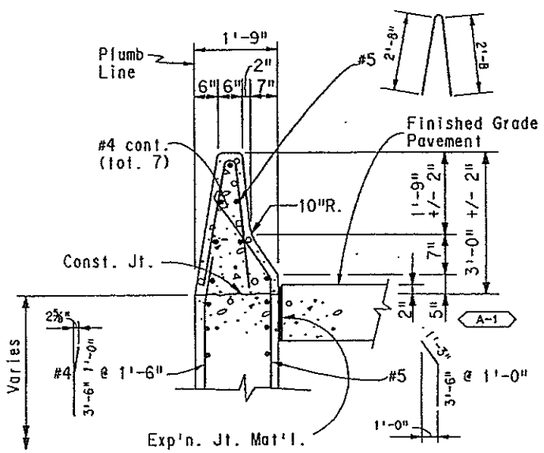

ON RETAINING WALL

Information Only for Bridge Rail Type 4 (470)		
DESCRIPTION	UNIT	PER UNIT
Concrete	Cu.Yd.	0.11
Reinf. Steel (Epoxy)	lb.	10.5

DIVISION OF HIGHWAYS

I-25 / 470 INTERCHANGE
RAMP E FLYOVER
BRIDGE RAIL TYPE 4 (470)

E-470
Engineer 470 Partnership

Designer A. Griffith	Structure Numbers	F - 17 - JW
Detailer A. Griffith		
Drawing Number 8-34 of 45 Drawings		

INITIAL	DATE	
AEG	4-90	Designed By
JW	4-90	Checked By
AEG	4-90	Quantities By
		Checked By

VALUES FOR ONE BEARING DEVICE

AS CONSTRUCTED						FEDERAL ROAD REGION NO.	DIVISION	PROJECT NUMBER	SHEET NUMBER
NO REVISIONS		REVISED	*	VOID		VIII	COLORADO	1A06	145

REVISIONS			
A-2	4-09-90	Anchor Bolt Size & Details	AEG
	- -		
	- -		

Location	Qty.	FX GD EXP	Angle θ (Degrees)	Vertical Load (Kips) Perm. D.L.	Vertical Load (Kips) Max. Load	Horizontal Load (Kips) Longit.	Horizontal Load (Kips) Transv.	Longitudinal Movement (Inches)	Initial Longitudinal Offset (Inches)	Conc. Girder No. Studs	Steel Girder No. Plug Welds	Rotation (Radians)	X-Slope % + Looking Sta. Ah'd.	Grade % + Sta. Ah'd.	Masonry Base Plate C	Masonry Base Plate D	A-2 Anchor Bolts Size	Anchor Bolts No.	Anchor Bolts Type	Top Plate Sole Plate A	Top Plate Sole Plate B	Base Pot I.D.	Height H
Abut.1,Left	1	GD	98° 02' 05"	111	233	5.5	33.5	4.04"	See Table Dwg. No. B-36		4	0.00348	+7.900	+0.558	25"	15"	1¼"	4	A325	18.5"	20.5"	10.02"	7.625"
Abut.1,Right	1	EXP	90° 00' 00"	124	276	6.2	6.2	4.04"			4	0.00323	+7.900	+0.558	25"	15"	1¼"	4	A325	18.5"	20.5"	10.02"	7.625"
Pier 2, Left	1	GD	94° 37' 13"	454	768	22.7	130.4	2.98"			4	0.00027	+7.900	+0.558	35"	24"	1¼"	4	A325	28"	29"	16.72"	10.25"
Pier 2, Right	1	EXP	90° 00' 00"	457	785	22.8	22.8	2.98"			4	0.00039	+7.900	+0.558	35"	24"	1¼"	4	A325	28"	29"	16.97"	10.25"
Pier 3, Left	1	FX	90° 00' 00"	558	888	73.1	73.1	—			4	0.00162	+7.900	+0.558	33"	26.5"	1¼"	4	A325	26.5"	26.5"	17.98"	8.625"
Pier 3, Right	1	FX	90° 00' 00"	463	791	73.1	73.1	—			4	0.00027	+7.900	+0.558	33"	26.5"	1¼"	4	A325	26.5"	26.5"	16.97"	8.625"
Pier 4,Left	1	EXP	90° 00' 00"	513	827	25.7	25.7	0.01"			4	0.00570	+7.900	+0.558	35"	24"	1¼"	4	A325	28"	29"	17.54"	10.25"
Pier 4,Right	1	EXP	90° 00' 00"	523	846	26.2	26.2	0.01"			4	0.00575	+7.900	+0.558	35"	24"	1¼"	4	A325	28"	29"	17.54"	10.25"
Pier 5,Left	1	FX	90° 00' 00"	537	765	76.7	76.7	—			4	0.00145	+7.900	+0.558	33"	26.5"	1¼"	4	A325	26.5"	26.5"	16.72"	8.625"
Pier 5,Right	1	FX	90° 00' 00"	534	829	76.7	76.7	—			4	0.00043	+7.900	+0.558	33"	26.5"	1¼"	4	A325	26.5"	26.5"	17.54"	8.625"
Abut.6,Left	1	GD	85° 58' 30"	130	186	6.5	39.6	2.81"			4	0.00610	+7.900	+0.558	25"	15"	1¼"	4	A325	18.5"	20.5"	10.02"	7.625"
Abut.6,Right	1	EXP	90° 00' 00"	147	232	7.4	7.4	2.81"			4	0.00506	+7.900	+0.558	25"	15"	1¼"	4	A325	18.5"	20.5"	10.02"	7.625"

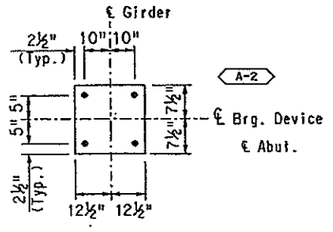

Abut. 1 & 6 ℄ Left & Right Bearing Devices

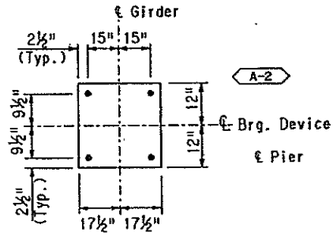

Piers 2 & 4 ℄ Left & Right Bearing Devices

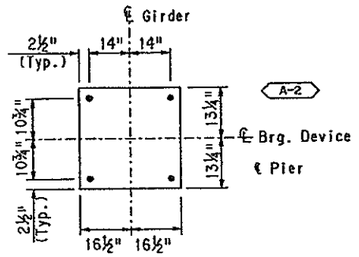

Piers 3 & 5 ℄ Left & Right Bearing Devices

MASONARY PLATE & ANCHOR BOLT SPACING DETAILS

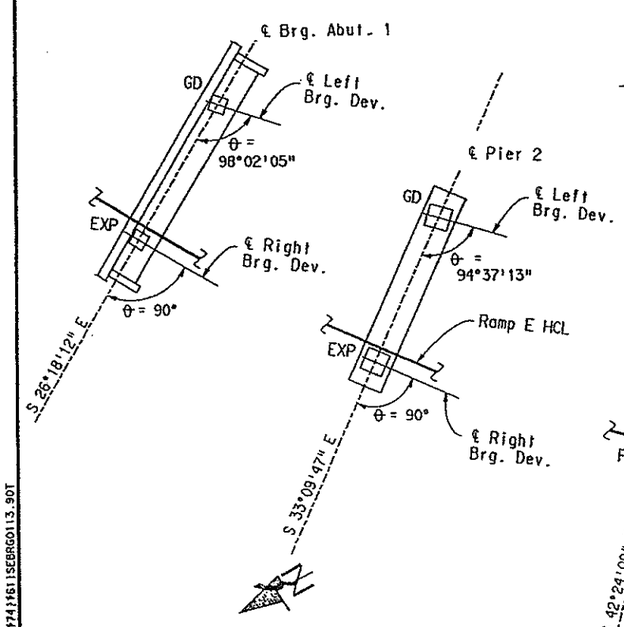

PLAN OF BEARINGS

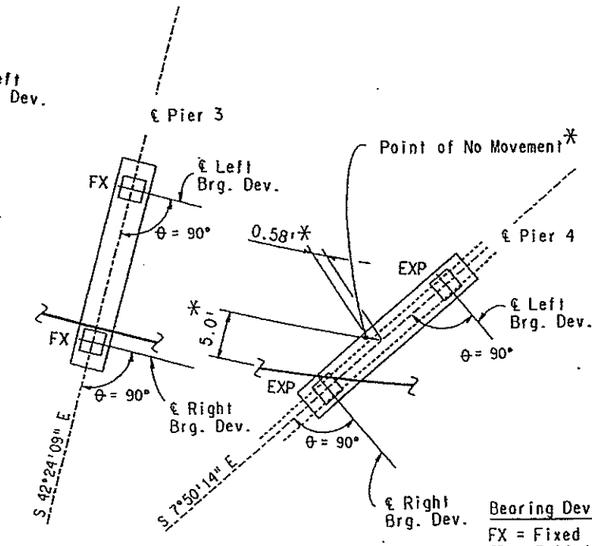

Bearing Devices:
FX = Fixed
GD = Guided
EXP = Multi-Directional Floating

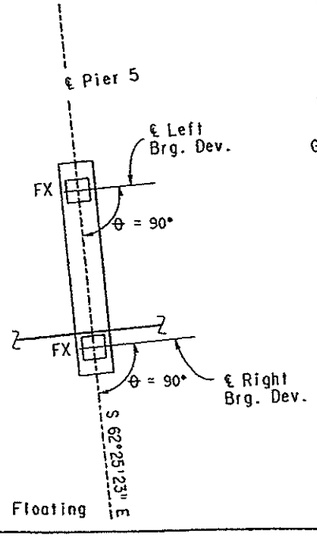

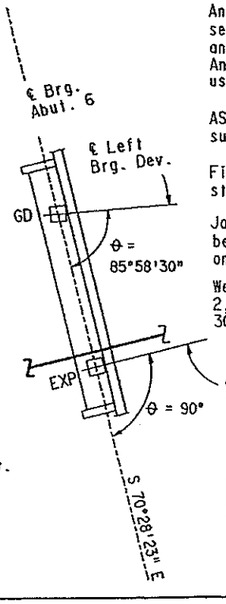

NOTES:

All structural steel for the bearing devices, including sole plates, top plates and masonry plates, shall be AASHTO M-183 (ASTM A36) unless otherwise shown.

Anchorages shall be included in bid price for Item No. 512 Bearing Device (Type III).

Bearing seat elevations at abutments and piers shall be checked and adjusted according to the final dimensions of bearing assemblies adopted.

Bearing assemblies shall be constructed so as to permit removal for repair or replacement by jacking the bridge from the seat by ¼".

Without alteration of connector sizes and locations, the contractor may propose using other similar bearings which meet the requirements on this drawing and in the special provisions, subject to the engineer's approval. "H" shall be at least 7".

The longitudinal movement tabulated is based on a total temperature change of 140°F (70°F rise and 70°F drop from a mean termperature of 40°F). The bearing device shall have a minimum of 2" additional movement capacity longitudinally each way from centerline of base pot.

All surfaces of structural steel components not connected to stainless steel, T.F.E. or elastomer shall be completely zinc metalized in accordance with AWS C.2.2. latest issue, to a minimum thickness 8 mils on exposed surfaces and 3 mils on protected surfaces.

Keyway shown in Section B is schematic. Contractor may supply side guide bars as alternate.

Side guide bars must bear only against upper elements and not against lower element (Base Pot).

Anchor bolts may be set, either in the wet concrete of bearing seat or placed within a formed cylindrical void 4" in diameter and then grouted with high strength non-shrink or epoxy grout. Anchor bolt spacings may be adjusted to suit the actual bearing used.

ASTM A354 GrBC, or A354 GrBD, or A449, or A490, or A687 may be substituted for ASTM A325 anchor bolts.

Fixed Bearing Devices shall be plug welded when the structure temperature is between 30° and 60° F.

Jacking for bearing device removal or replacement shall be one bearing device at a time. Jacking locations shall be as shown on substructure drawings. No live load is allowed during jacking.

Welding of bearing sole plate to girder bottom flange at Piers 2, 3, 4, & 5 shall be done at ambient temperatures between 30 and 60 degrees F.

INITIAL	DATE	
Designed By	JHP	2-90
Checked By	AEG	3-90
Detailed By	AEG	1-90
Checked By	AEG	2-90
Quantities By	JHP	2-90
Checked By	AEG	2-90

USERNAME
S:\24#5-95\BRGE\1741161\SEBRG0113.90T

DIVISION OF HIGHWAYS

I-25/ 470 INTERCHANGE
RAMP E FLYOVER
BEARING DEVICE (TYPE III)
DETAILS

Designer J. Peck	Structure Numbers	F - 17 - JW
Detailer A.Griffith		
Drawing Number B-35	of 45	Drawings

E-470
Engineer 470 Partnership

BEARING DEVICE (TYPE III) SHEET

SEBRG0113.90T

AS CONSTRUCTED			
NO REVISIONS	REVISED	VOID	

FEDERAL ROAD REGION NO.	DIVISION	PROJECT NUMBER	SHEET NUMBER
VIII	COLORADO	1A06	146

REVISIONS		
A-1	4-02-90	Brg. Seat & Plug Weld Details	AEG
	- -		
	- -		

INITIAL LONGITUDINAL OFFSET				
Str. Temp.	Abut. 1	Pier 2	Pier 4	Abut. 6
30° F	−5/16"	−7/32"	0"	−3/16"
40° F	0"	0"	0"	0"
50° F	5/16"	7/32"	0"	3/16"
60° F	9/16"	7/16"	0"	3/8"
70° F	7/8"	5/8"	0"	5/8"
80° F	1 5/32"	7/8"	0"	13/16"

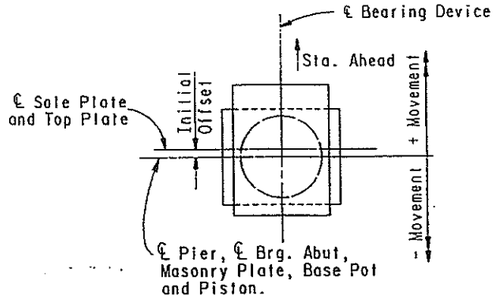

INITIAL OFFSET

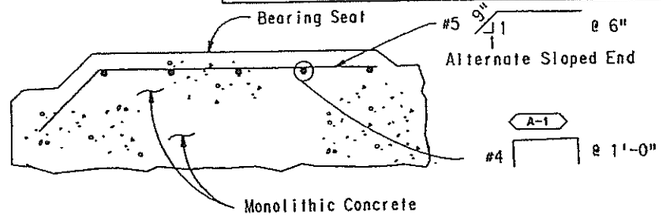

BEARING SEAT

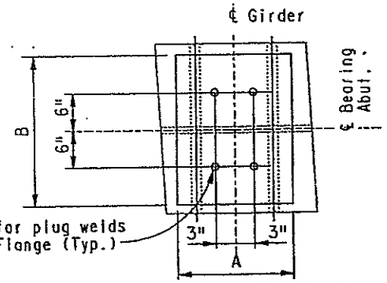

ABUTMENT SOLE PLATE

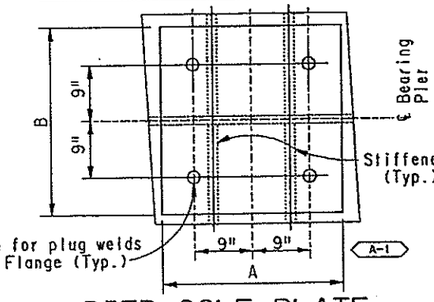

PIER SOLE PLATE

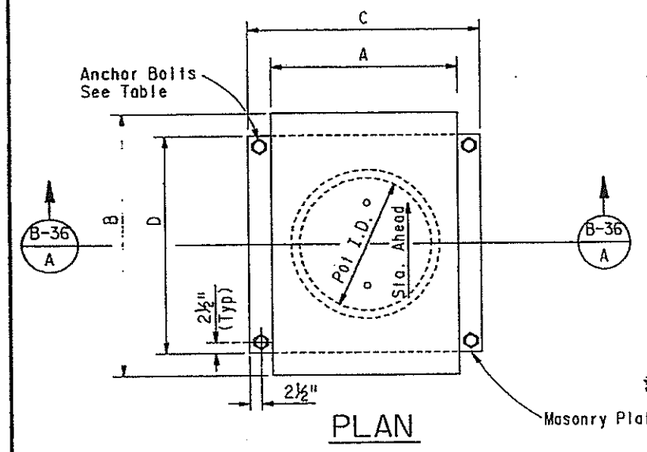

PLAN

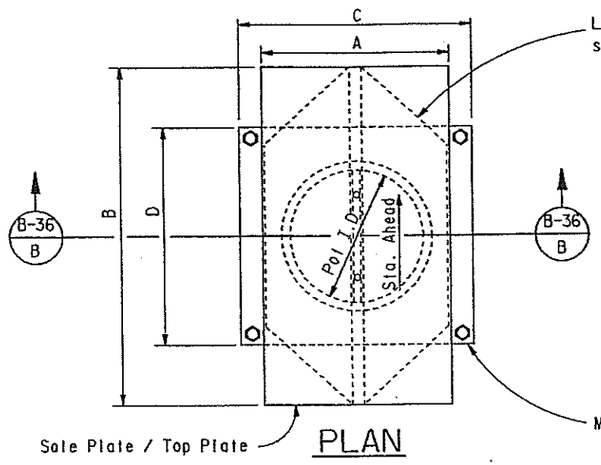

PLAN

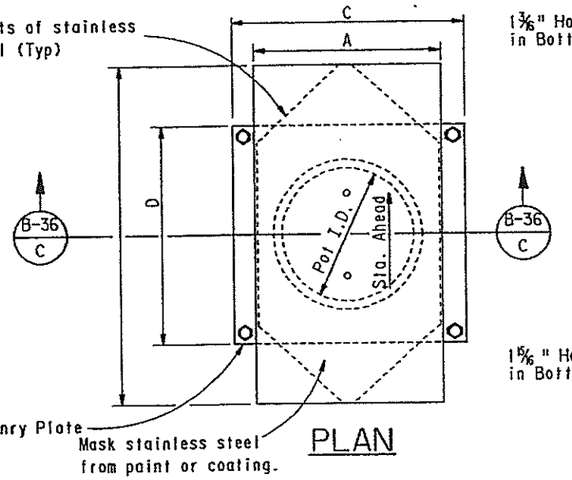

PLAN

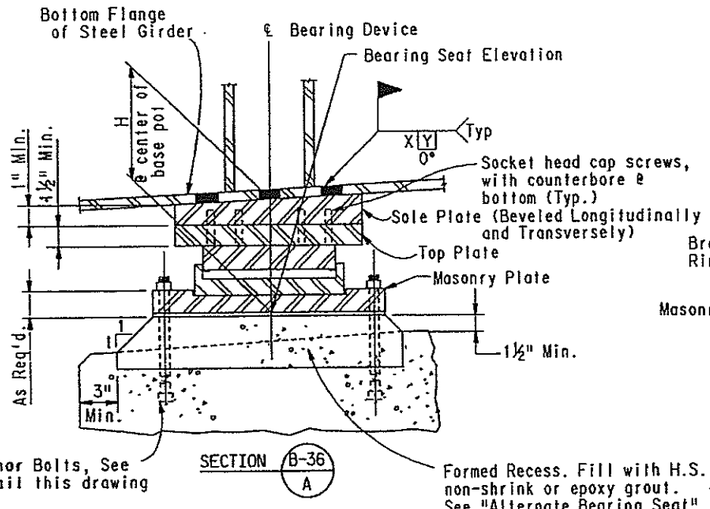

FIXED BEARING

(FX)

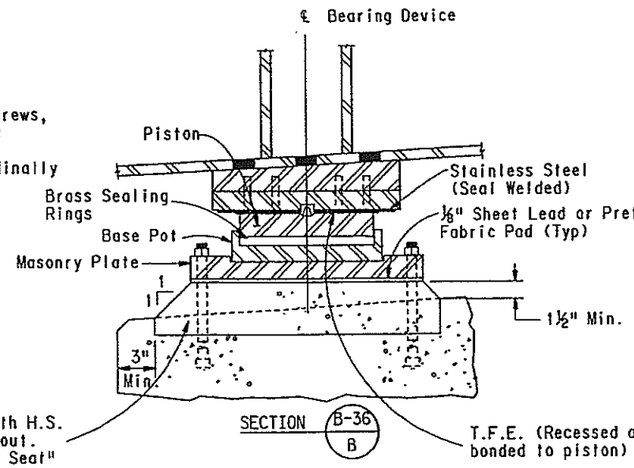

UNI-DIRECTIONAL

GUIDED EXPANSION BEARING

(GD)

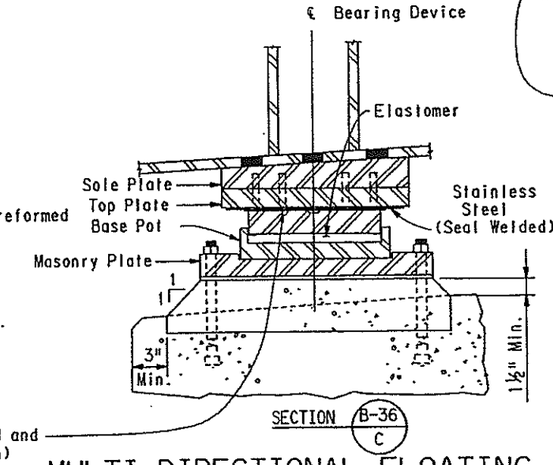

MULTI-DIRECTIONAL FLOATING

EXPANSION BEARING

(EXP)

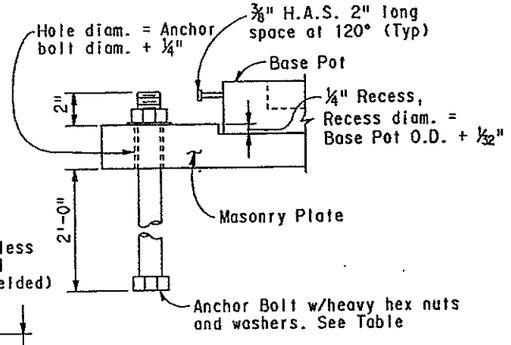

ANCHOR BOLT DETAIL

INITIAL	DATE	
JHP	2-90	Designed By
AEG	2-90	Checked By
GMC	2-90	Detailed By
JHP	3-8-90	Checked By
AEG	3-8-90	Quantities By
JHP	3-8-90	Checked By
AEG	3-8-90	

DIVISION OF HIGHWAYS

I-25 / 470 INTERCHANGE

RAMP E FLYOVER

BEARING DEVICE (TYPE III)

DETAILS

E-470

Engineer 470 Partnership

Designer J. Peck		Structure Numbers	F - 17 - JW
Detailer G.Christnacht			
Drawing Number	B-36	of	45 Drawings

\\\\DGNSPEC\\\\\\\\\\\\\\\\
USERNAME
s=jack=s25(ANE)#24|16|1|SEBRG0213.90T

AS CONSTRUCTED			
NO REVISIONS	REVISED	VOID	

FEDERAL ROAD REGION NO.	DIVISION	PROJECT NUMBER	SHEET NUMBER
VIII	COLORADO	1A06	147

REVISIONS			
A-1	4-2-90	Dimension	AEG
	- -		
	- -		

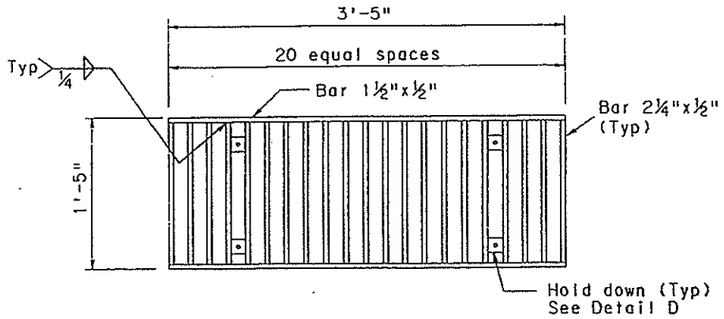

GRATING PLAN

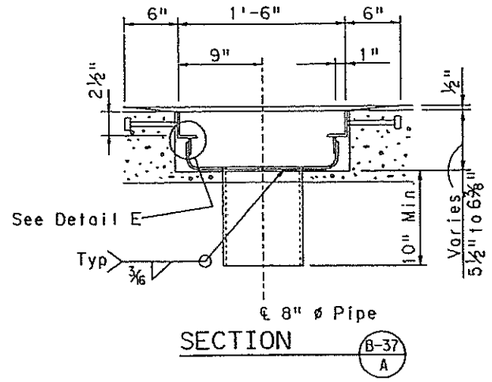

SECTION B-37 A

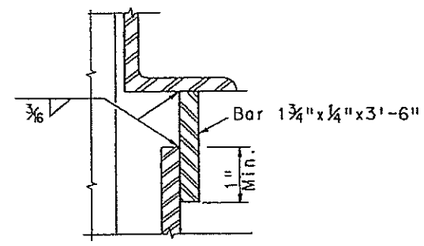

DETAIL E

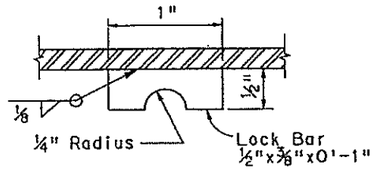

LOCK BAR DETAIL F

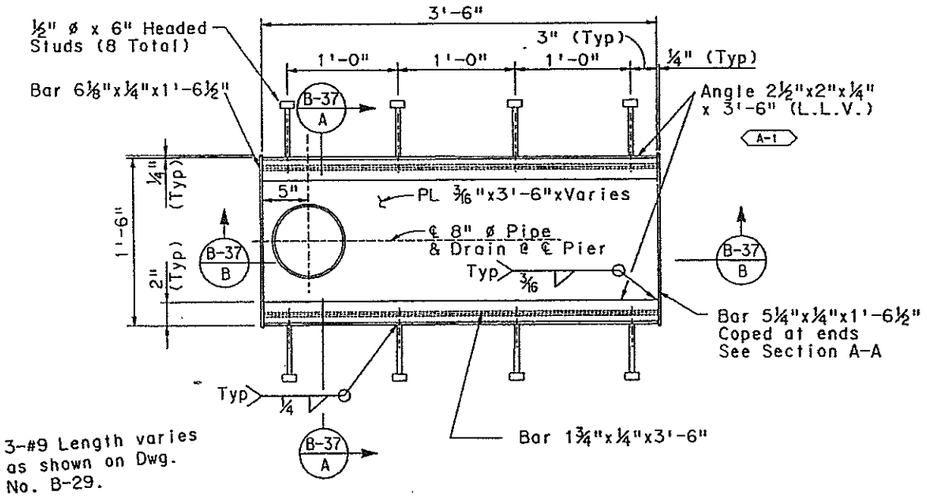

FRAME PLAN

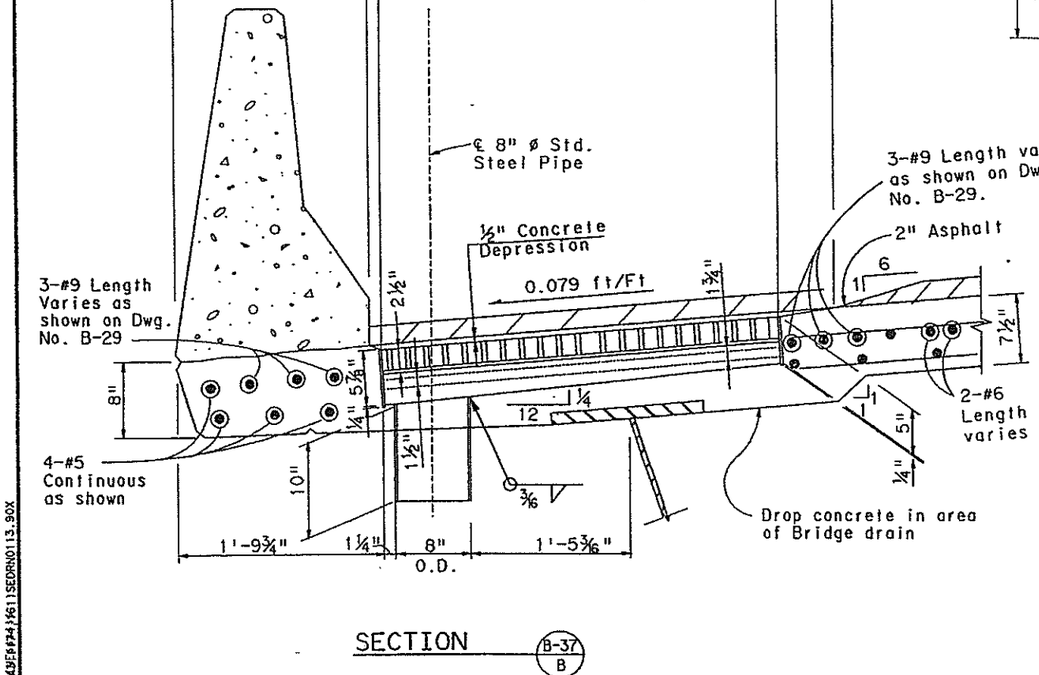

SECTION B-37 B

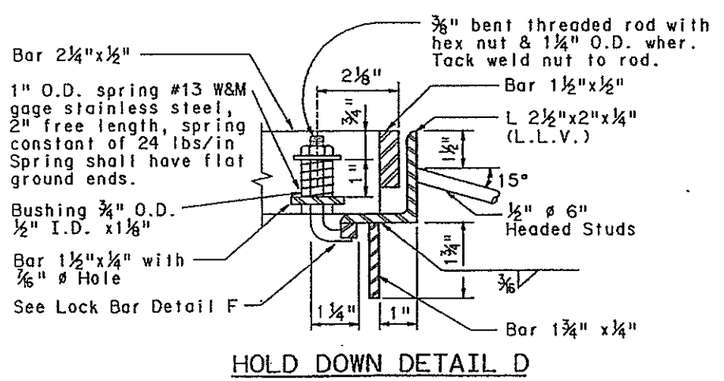

HOLD DOWN DETAIL D

FABRICATION NOTES:

1. All pipes to be 8"x 0.322 welded steel pipe, ASTM A53 Grade B, except as noted. Fittings and bends shall have a minimum wall thickness of ¼".
2. All joints and/or connections shall be butt-welded or connected by a pipe sleeve and shall be smooth throughout inside of pipe.
3. All bends shall be on a 2'-6" minimum radius measured along centerline of pipe. All bends shall be smooth.
4. Fabricated deck drains, 8" diameter pipes, and pipe supports shall be galvanized after fabrication.
5. All steel plates, bars and shapes shall conform to ASTM A36 unless otherwise noted. All anchor bolts shall conform to ASTM A307.
6. It is estimated 135 L.F. (total) of drain pipe will be required for Piers #3 & #5. All work and materials to be paid for under Item 513, Bridge Drain (8-Inch).

INSTALLATION NOTES:

1. All pipes shall be supported at 4'-0" max. spacing as shown in Detail on Drawing No. B-38.
2. All galvanized metal surfaces to be painted shall be blast cleaned and chemically treated as indicated in the specifications.
3. All visible metal surfaces for bridge drains and 8" diameter pipes shall be painted to match existing concrete surfaces.
4. Paint shall be a two-coat urethane system, or an epoxy mastic-urethane system as indicated in the specifications.
5. Place first shear Studs 2'-3" each side of ℄ Pier #3 & #5 for Web #1.
6. Locate Pipe clamp at a maximum of 4'-0" spacing and attach to box girder, pier cap and pier column, as shown.
7. Required at the following locations: Pier #3 & Pier #5 at inside Shoulder.

INITIAL	DATE	
Designed By	AEG	1-90
Checked By	MHN	1-90
Detailed By	AEG	1-90
Checked By	AEG	3-90
Quantities By	JHP	3-90
Checked By	JHP	3-90

USERNAME
S:\24\FS\SDS\439\Sht\411\SEDRN0113.90X

DIVISION OF HIGHWAYS

I-25 / 470 INTERCHANGE
RAMP E FLYOVER .
BRIDGE DRAIN (SPECIAL)

Designer A. Griffith	Structure Numbers	F - 17 - JW
Detailer A. Griffith		
Drawing Number B-37	of 45	Drawings

E-470
Engineer 470 Partnership

AS CONSTRUCTED					
NO REVISIONS		REVISED		VOID	

FEDERAL ROAD REGION NO.	DIVISION	PROJECT NUMBER	SHEET NUMBER
VIII	COLORADO	1A06/1802	148

REVISIONS			
A-1	10-5-89		
	- -		
	- -		

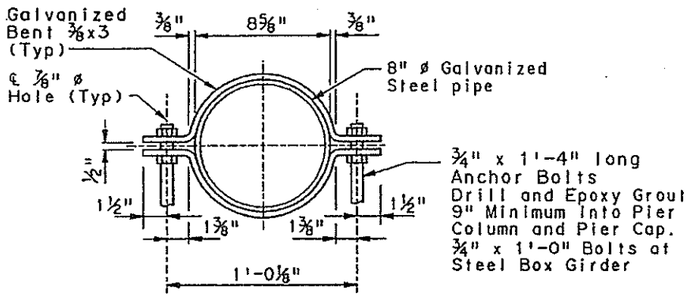

DRAIN PIPE CLAMP DETAIL

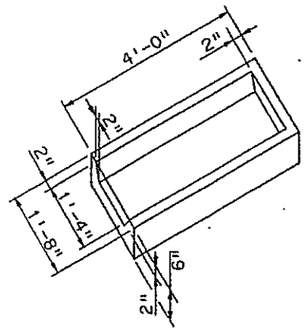

CONCRETE SPLASH BLOCK DETAIL

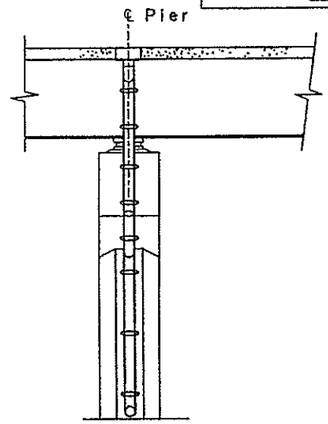

SECTION B-38 A

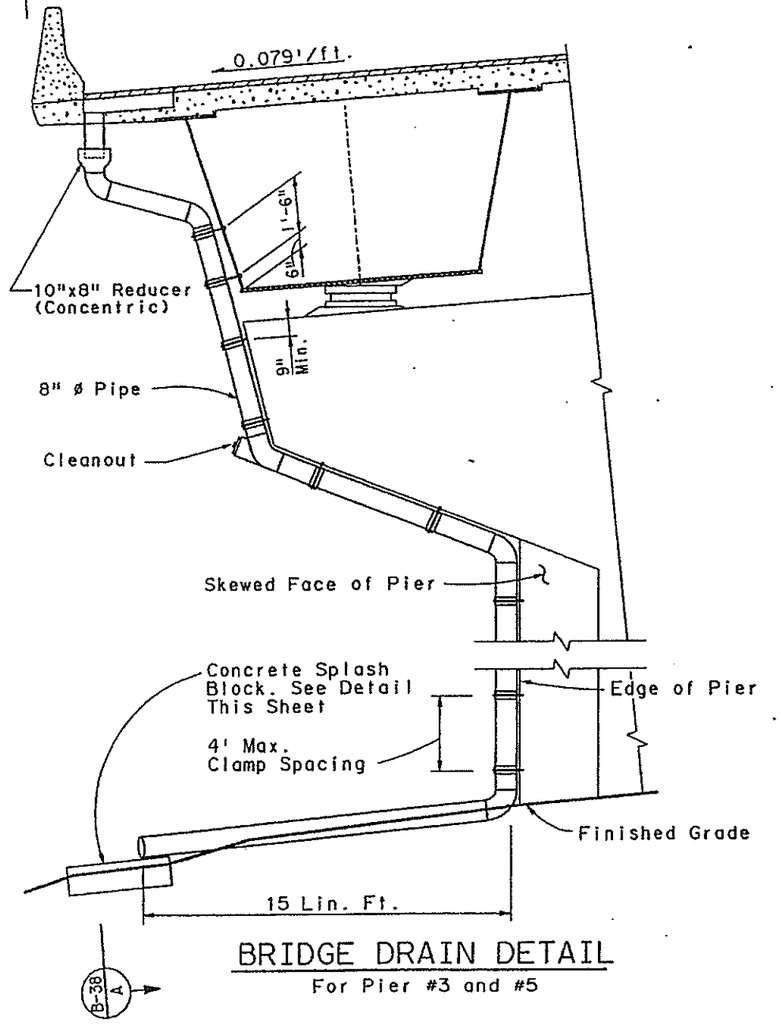

BRIDGE DRAIN DETAIL

For Pier #3 and #5

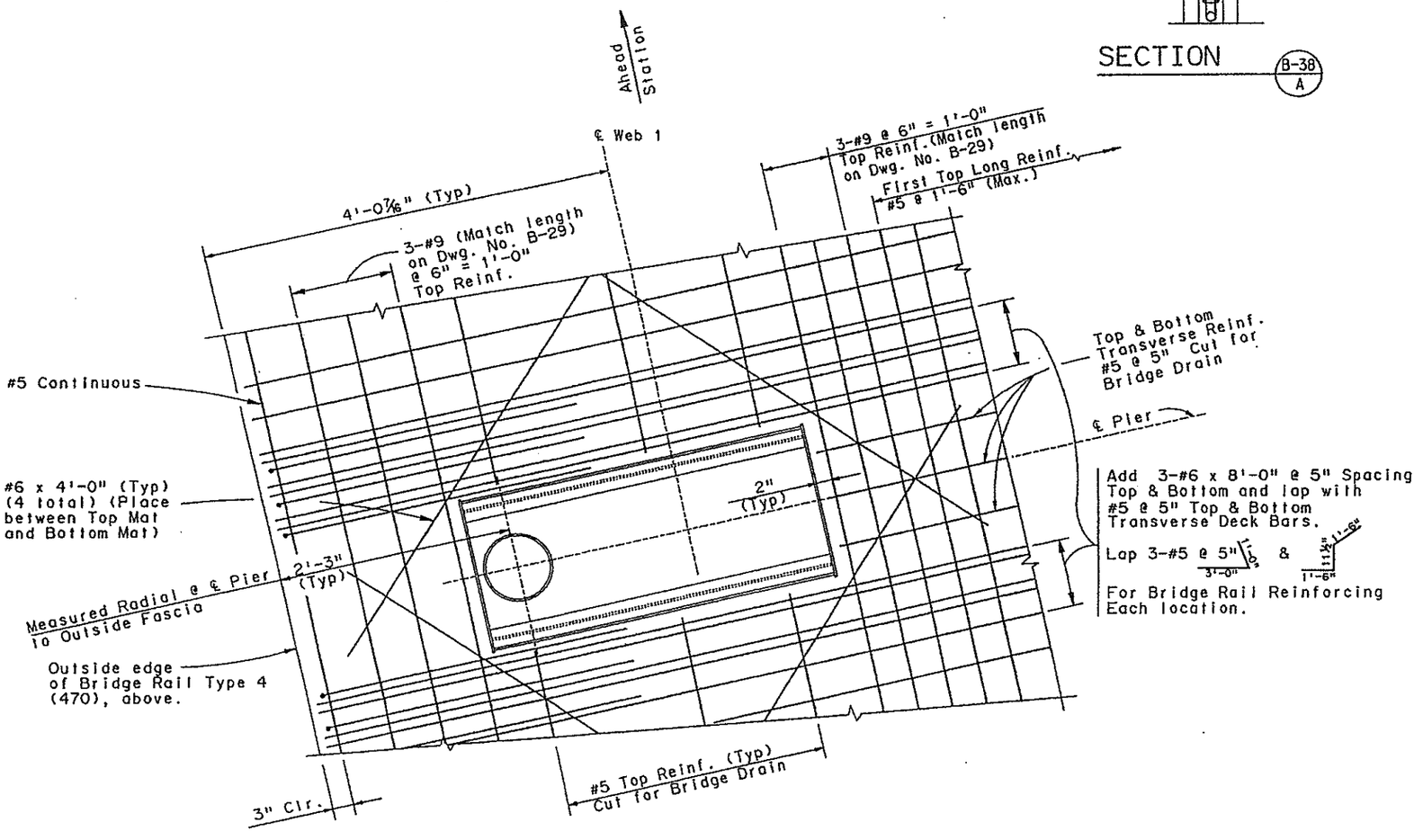

DECK REINFORCING FOR BRIDGE DRAIN

This sheet used in Conjunction with Dwg. No. B-28 & B-29.
Longitudinal Bottom Reinf. not shown for clarity.

	INITIAL	DATE	
Designed By	AEG	3-90	Designed By
Checked By	JMP	3-90	Checked By
Detailed By	NHM	3-90	Quantities By
Quantities By	JMP	1-90	Detailed By
Checked By	AEG	1-90	Checked By

USERNAME = USERNAME
S:\E470\SPECS\PS4\MISC\SEDRN0213.90X

E-470 Engineer 470 Partnership

DIVISION OF HIGHWAYS

I-25 / 470 INTERCHANGE
RAMP E FLYOVER
BRIDGE DRAIN (SPECIAL)

Designer A. GRIFFITH	Structure Numbers	F - 17 - JW
Detailer A. GRIFFITH		
Drawing Number B-38	of 45	Drawings

AS CONSTRUCTED					
NO REVISIONS		REVISED		VOID	

FEDERAL ROAD REGION NO.	DIVISION	PROJECT NUMBER	SHEET NUMBER
VIII	COLORADO	1A06/1802.	149

REVISIONS			
- -			
- -			
- -			

INITIAL	DATE
Designed By AEG	1-90
Checked By JLS	1-90
Detailed By GMC	1-90
Checked By AEG	2-90
Quantities By JHP	2-90
Checked By AEG	2-90

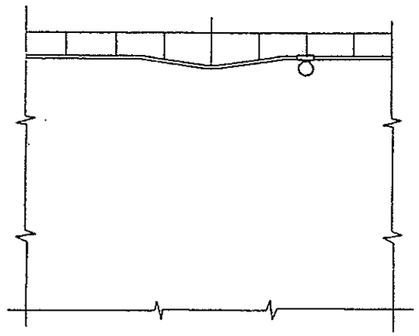

SECTION B31/A

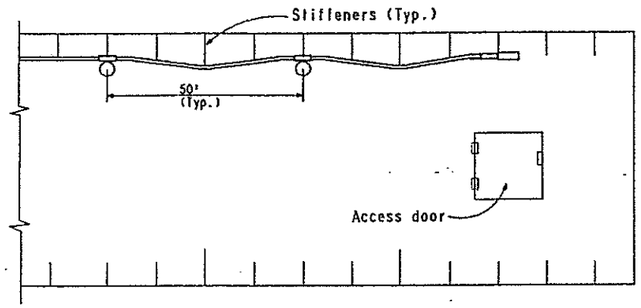

PLAN

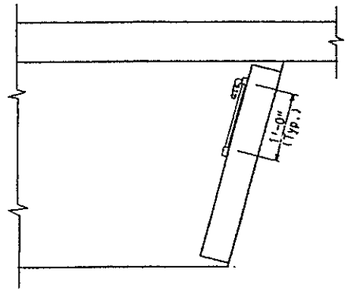

SECTION B31/B

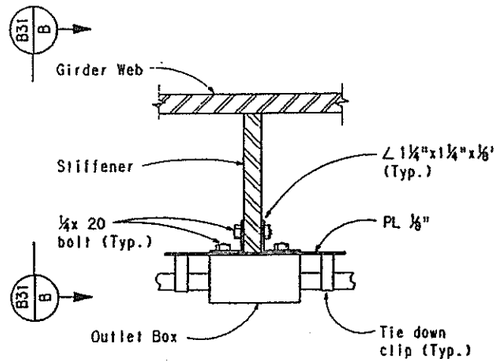

PLAN

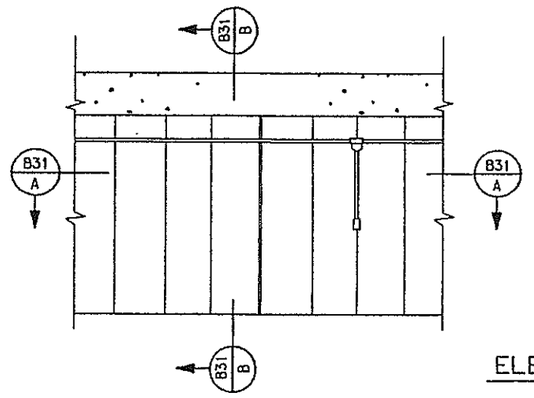

ELEVATION

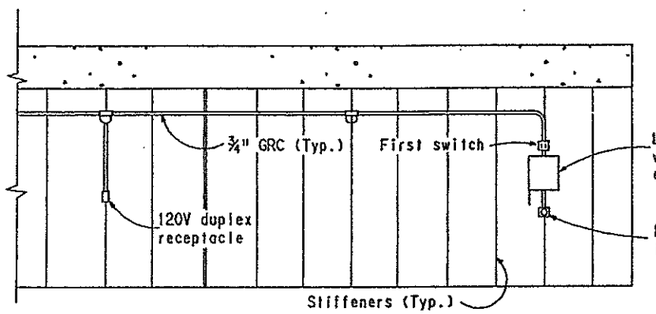

▲ When conduit is shown on the construction Layout, the load center shall be connected to this power source instead of using a separate power inlet. Use 3-#6 copper wires in conduit.

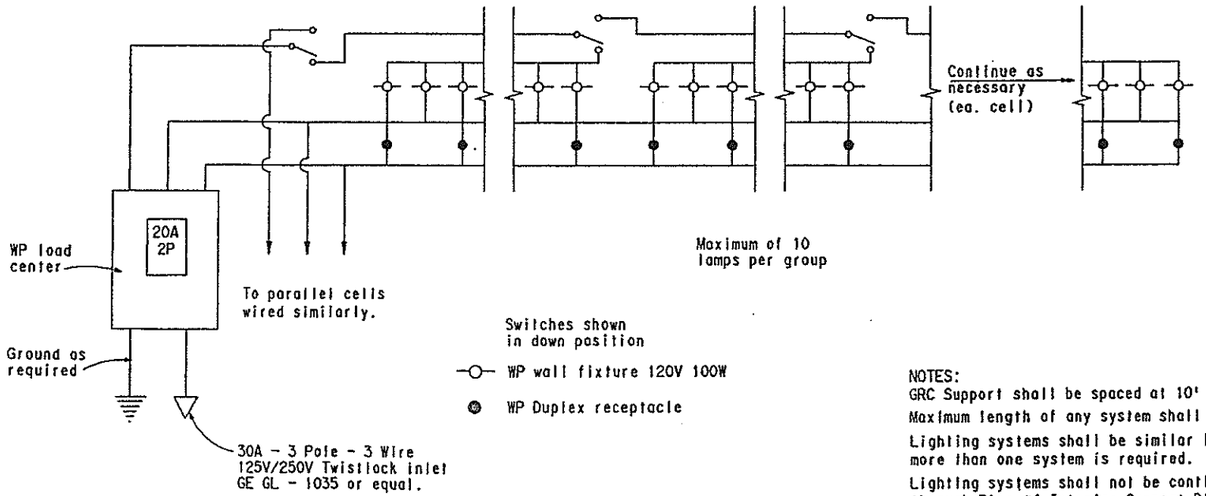

WIRING DIAGRAM

NOTES:
GRC Support shall be spaced at 10' (Max.)
Maximum length of any system shall be 1300'.
Lighting systems shall be similar length when more than one system is required.
Lighting systems shall not be continuous through Pier #4 Interior Support Diaphragm.

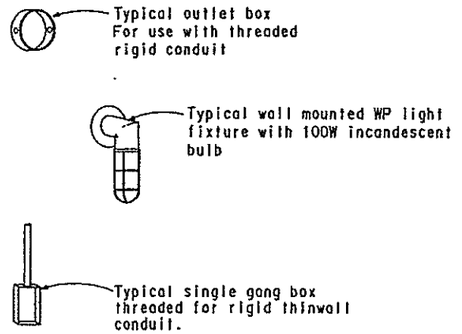

FIXTURE DETAILS

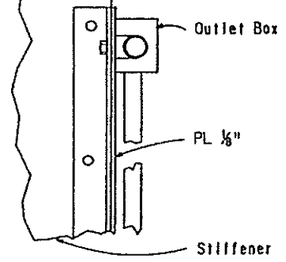

SECTION B31/C

MOUNTING DETAIL

E-470
Engineer 470 Partnership

DIVISION OF HIGHWAYS

I-25/470 INTERCHANGE
RAMP E FLYOVER
INTERIOR LIGHTING
(STEEL BOX GIRDER)

Designer A. GRIFFITH	Structure Numbers	F - 17 - JW
Detailer G. Christnacht		
Drawing Number B-39 of 45 Drawings		

INTERIOR LIGHTING DETAIL
SELIT0113.90X

SELIT0113.90X
USERNAME
SS241125ESLMF5741561

AS CONSTRUCTED					
NO REVISIONS		REVISED		VOID	

FEDERAL ROAD REGION NO.	DIVISION	PROJECT NUMBER	SHEET NUMBER
VIII	COLORADO	1A06/1802	150

REVISIONS			
- -			
- -			
- -			

INITIAL	DATE
Designed By AEG	1-90
Checked By JHP	1-90
Detailed By GMC	1-90

Checked By	AEG	2-90
Quantities By	JHP	2-90
Checked By	JHP	2-90
	AEG	2-90

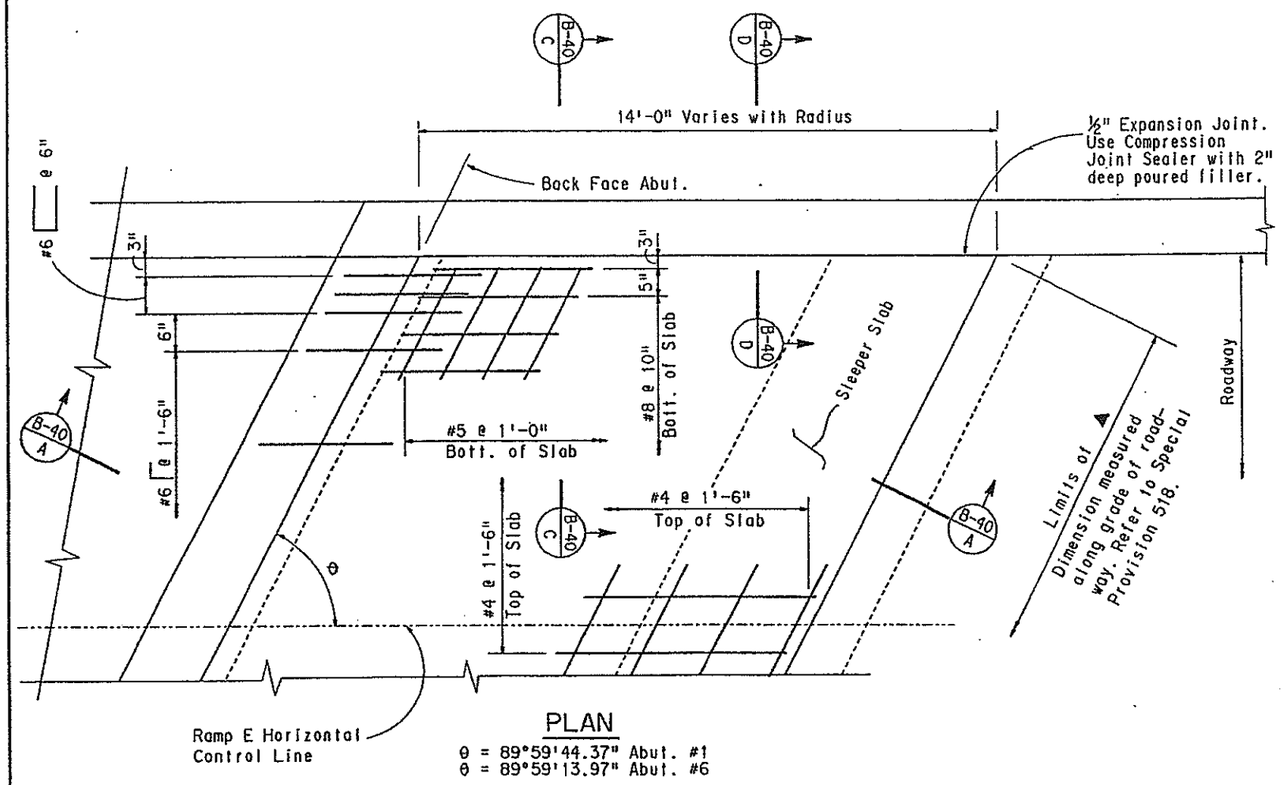

PLAN

θ = 89°59'44.37" Abut. #1
θ = 89°59'13.97" Abut. #6

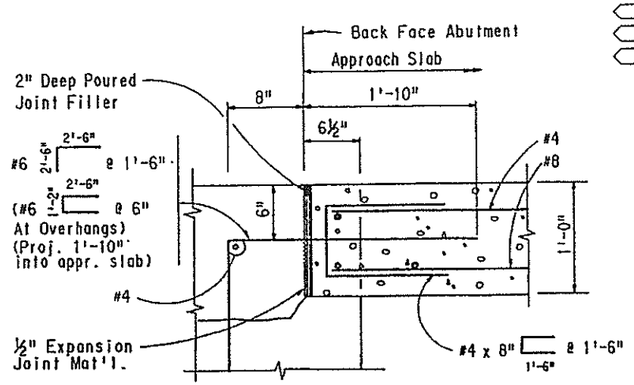

DETAIL B

GENERAL NOTES:

Concrete Class D (Bridge) shall be used for approach slabs.

The 20 Gauge Galvanized sheet metal and the 1" Styrofoam will not be measured and paid for separately, but shall be included in the work.

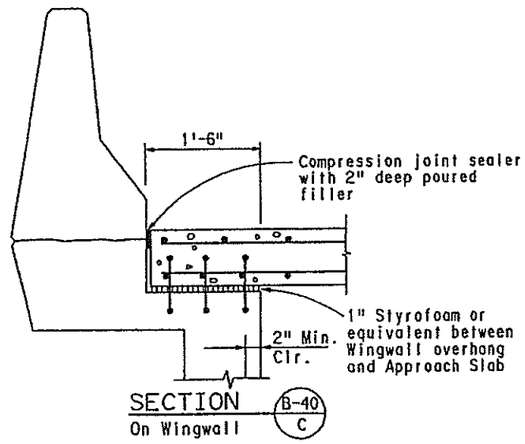

SECTION On Wingwall (B-40 C)

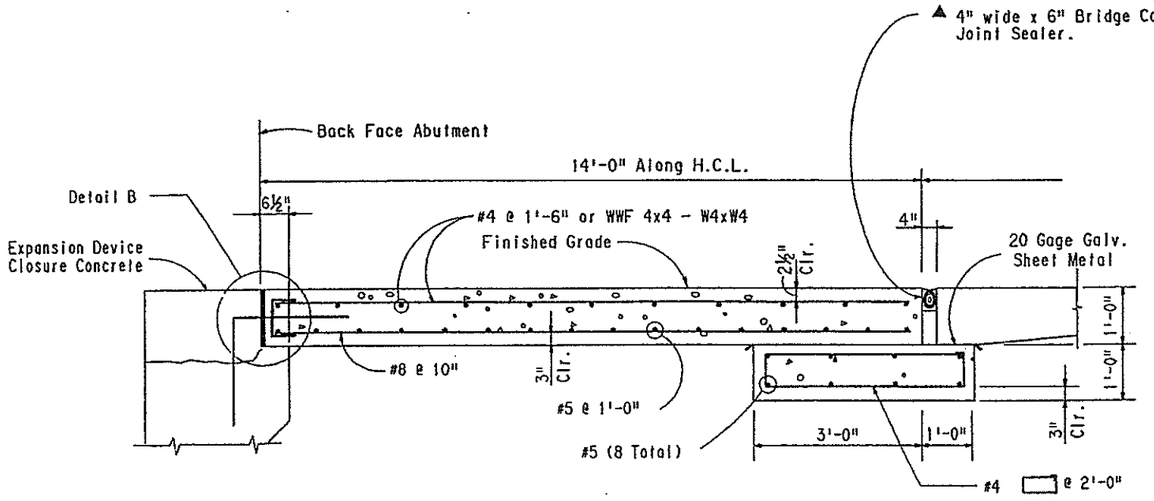

SECTION (B-40 A)

Taken perpendicular to ℄ Bearing

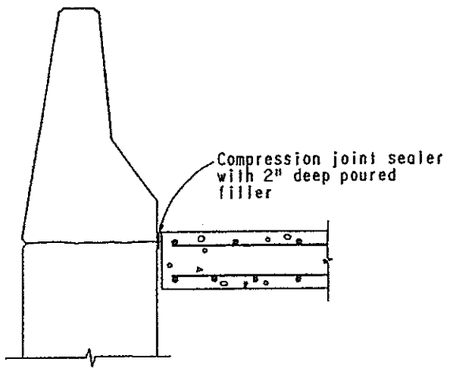

SECTION On Retaining Wall (B-40 D)

DIVISION OF HIGHWAYS

I-25 / 470 INTERCHANGE
RAMP E FLYOVER
APPROACH SLAB DETAILS

Designer A. Griffith	Structure Numbers	F - 17 - JW
Detailer G.Christinachi		
Drawing Number B-40	of 45	Drawings

E-470
Engineer 470 Partnership

APPROACH SLAB DETAILS - CONCRETE

SEAPS0113.90W

USERNAME
S:\1\DGN\SPEC\1\1\1\1\1\1\1\1\1\1\SEAPS0113.90W

AS CONSTRUCTED					
NO REVISIONS		REVISED		VOID	

FEDERAL ROAD REGION NO.	DIVISION	PROJECT NUMBER	SHEET NUMBER
VIII	COLORADO	1A06/1802	151

REVISIONS		
- -		
- -		
- -		

TABLE OF ESTIMATED ELEVATIONS FOR INFORMATION ONLY		
LOCATION	ELEVATION A	ELEVATION B
ABUT. #1	5892	5892
ABUT. #6	5886	5886

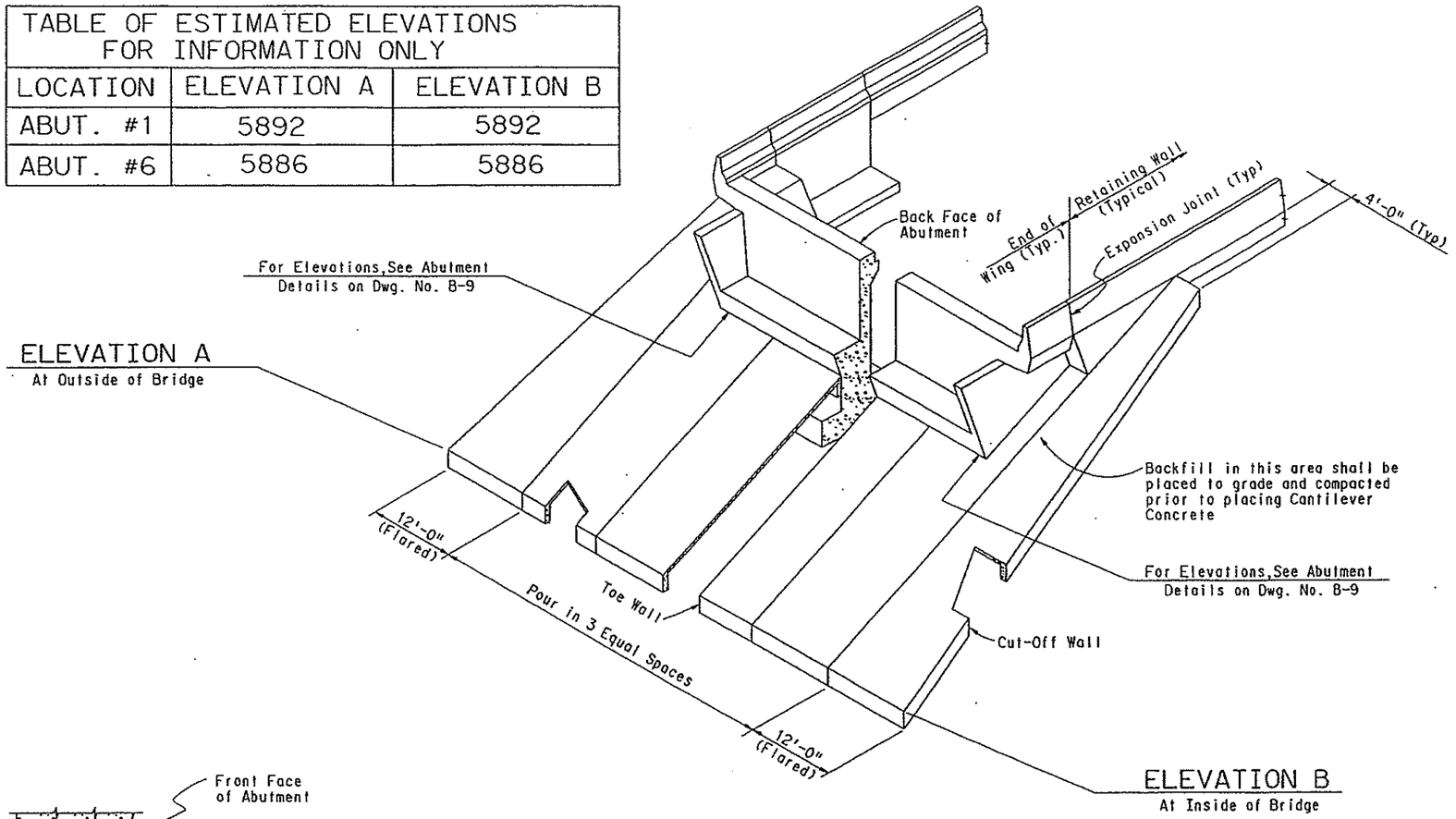

ABUTMENT #1 SHOWN LOOKING BACK STATION

ABUTMENT #6 SIMILIAR, OPPOSITE HAND.

NOTES

1. Slope paving shall be poured in 3 equal transverse section with a tooled construction joint at each section.
2. Wire fabric shall be 2" from the end of the joint and shall lap 8" at splices.
3. Where slope paving butts against structural concrete, separate with 1" expansion joint material.
4. Expansion joint material & welded wire fabric shall not be paid for separately, but shall be included in item 507 concrete slope and ditch paving (reinforced).
5. The surface of finished slope paving shall receive a float finish of uniform appearance free of float marks and smoothly troweled construction joints.
6. Structure excavation for concrete slope and ditch paving shall be limited to the actual volume occupied by the slope paving concrete.
7. All exposed concrete surfaces down to 1'-0" below finished grade shall be finished with a Class 1 finish, colored coating meeting the requirements in special provision revision of section 601.

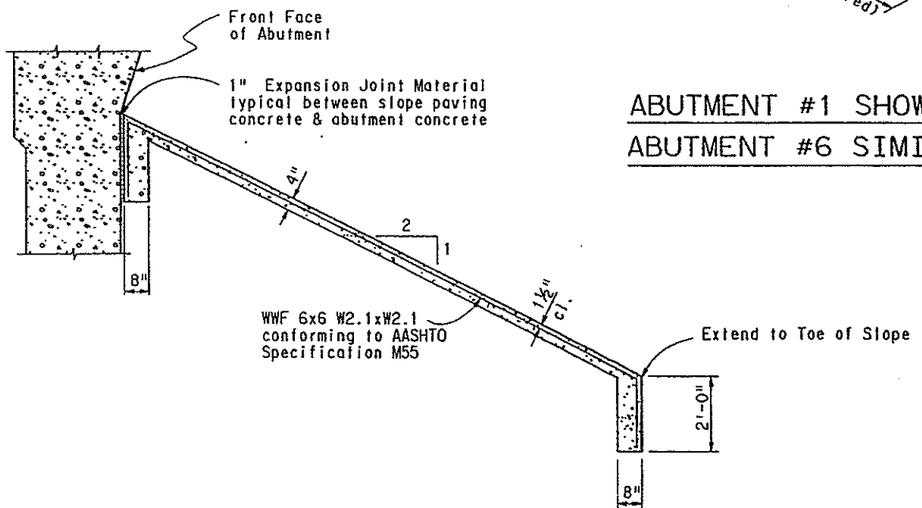

TYPICAL SECTION THRU SLOPE PAVING

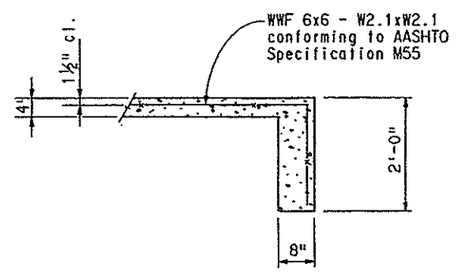

SECTION THRU CUT-OFF WALL

Toe Wall Similiar

	INITIAL	DATE			
Designed By	AEG	2-90	Checked By	AEG	3-90
Checked By	JHP	3-90	Quantities By	JHP	3-90
Detailed By	AEG	2-90	Checked By	AEG	3-90

E-470

Engineer 470 Partnership

DIVISION OF HIGHWAYS

I-25 / 470 INTERCHANGE
RAMP E FLYOVER

SLOPE PAVING DETAILS

Designer A. GRIFFITH	Structure Numbers	F - 17 - JW	
Detailer A. GRIFFITH			
Drawing Number B-41	of	45	Drawings

SLOPE PAVING DETAIL

SEPAV0113 90

BRIDGE DECK ELEVATIONS

REVISIONS		
(A-1) 4-2-90	Revised Geometry	J.L.S.

AS CONSTRUCTED: NO REVISIONS [ ] REVISED [ ] VOID [ ]

FED. ROAD REGION	DIVISION	PROJ. NO.	SHEET NO.
VIII	COLORADO	1-06	152

BENT LINE DESCRIPTION OR FRACTIONAL POINT DESIGNATION	STATION	OFFSET	ELEVATION	COORDINATES FROM LAYOUT LINE: EAST	COORDINATES FROM LAYOUT LINE: NORTH	BENT LINE LENGTH FROM N-GRID or OFFSET FROM EXTERIOR GIRDER	GIRDER LINE LENGTH
LONGITUDINAL LINE: LT. DECK EDGE							
BF ABUT 1	984+18.5690	-20.7500	5905.8837	2178521.2723	628112.7993	177200.3758	604.3765
CL ABUT 1	984+22.1600	-20.7500	5905.9139	2178518.1313	628111.2553	177193.2874	607.8266
F-1	984+27.0600	-20.7500	5905.9540	2178513.8563	628109.1262		612.6023
F-2	984+31.9600	-20.7500	5905.9929	2178509.5942	628106.9716		617.3781
F-3	984+36.8600	-20.7500	5906.0306	2178505.3451	628104.7916		622.1539
F-4	984+41.7600	-20.7500	5906.0670	2178501.1090	628102.5861		626.9297
F-5	984+46.6600	-20.7500	5906.1022	2178496.8863	628100.3553		631.7055
F-6	984+51.5600	-20.7500	5906.1361	2178492.6770	628098.0992		636.4812
F-7	984+56.4600	-20.7500	5906.1688	2178488.4813	628095.8180		641.2570
F-8	984+61.3600	-20.7500	5906.2002	2178484.2993	628093.5118		646.0328
F-9	984+66.2600	-20.7500	5906.2304	2178480.1311	628091.1805		650.8086
F-10	984+71.1600	-20.7500	5906.2593	2178475.9771	628088.8243		655.5844
F-11	984+76.0600	-20.7500	5906.2871	2178471.8372	628086.4433		660.3601
F-12	984+80.9600	-20.7500	5906.3144	2178467.7116	628084.0376		665.1359
F-13	984+85.8600	-20.7500	5906.3418	2178463.6005	628081.6072		669.9117
F-14	984+90.7600	-20.7500	5906.3691	2178459.5040	628079.1522		674.6875
F-15	984+95.6600	-20.7500	5906.3964	2178455.4223	628076.6728		679.4633
F-16	985+00.5600	-20.7500	5906.4238	2178451.3555	628074.1689		684.2390
F-17	985+05.4600	-20.7500	5906.4511	2178447.3038	628071.6408		689.0148
F-18	985+10.3600	-20.7500	5906.4785	2178443.2672	628069.0884		693.7906
F-19	985+15.2600	-20.7500	5906.5058	2178439.2461	628066.5120		698.5664
CL PIER 2	985+20.1600	-20.7500	5906.5332	2178435.2404	628063.9115	143384.9091	703.3422
F-1	985+26.7600	-20.7500	5906.5700	2178429.8697	628060.3710		709.7748
F-2	985+33.3600	-20.7500	5906.6068	2178424.5278	628056.7872		716.2075
F-3	985+39.9600	-20.7500	5906.6437	2178419.2149	628053.1606		722.6402
F-4	985+46.5600	-20.7500	5906.6805	2178413.9315	628049.4912		729.0729
F-5	985+53.1600	-20.7500	5906.7173	2178408.6778	628045.7793		735.5056
F-6	985+59.7600	-20.7500	5906.7542	2178403.4542	628042.0252		741.9383
F-7	985+66.3600	-20.7500	5906.7910	2178398.2611	628038.2291		748.3710
F-8	985+72.9600	-20.7500	5906.8278	2178393.0987	628034.3913		754.8036
F-9	985+79.5600	-20.7500	5906.8647	2178387.9674	628030.5119		761.2363
F-10	985+86.1600	-20.7500	5906.9015	2178382.8676	628026.5913		767.6690
F-11	985+92.7600	-20.7500	5906.9383	2178377.7996	628022.6297		774.1017
F-12	985+99.3600	-20.7500	5906.9751	2178372.7637	628018.6274		780.5344
F-13	986+05.9600	-20.7500	5907.0120	2178367.7602	628014.5845		786.9671
F-14	986+12.5600	-20.7500	5907.0488	2178362.7895	628010.5015		793.3997
F-15	986+19.1600	-20.7500	5907.0856	2178357.8518	628006.3785		799.8324
F-16	986+25.7600	-20.7500	5907.1225	2178352.9476	628002.2159		806.2651
F-17	986+32.3600	-20.7500	5907.1593	2178348.0771	627998.0138		812.6978
F-18	986+38.9600	-20.7500	5907.1961	2178343.2406	627993.7726		819.1305
F-19	986+45.5600	-20.7500	5907.2330	2178338.4385	627989.4926		825.5632
CL PIER 3	986+52.1600	-20.7500	5907.2698	2178333.6711	627985.1739	116162.8250	831.9958
F-1	986+60.1140	-20.7500	5907.3142	2178327.9721	627979.9184		839.7482
F-2	986+68.0681	-20.7500	5907.3586	2178322.3244	627974.6078		847.5006
F-3	986+76.0221	-20.7500	5907.4030	2178316.7286	627969.2425		855.2530
F-4	986+83.9761	-20.7500	5907.4473	2178311.1852	627963.8231		863.0054
F-5	986+91.9302	-20.7500	5907.4917	2178305.6947	627958.3501		870.7578
F-6	986+99.8842	-20.7500	5907.5361	2178300.2577	627952.8240		878.5102
F-7	987+07.8383	-20.7500	5907.5805	2178294.8746	627947.2453		886.2626
F-8	987+15.7923	-20.7500	5907.6249	2178289.5460	627941.6146		894.0150
F-9	987+23.7463	-20.7500	5907.6693	2178284.2723	627935.9323		901.7674
F-10	987+31.7004	-20.7500	5907.7137	2178279.0542	627930.1991		909.5198
F-11	987+39.6544	-20.7500	5907.7581	2178273.8920	627924.4154		917.2722
F-12	987+47.6084	-20.7500	5907.8024	2178268.7862	627918.5819		925.0246
F-13	987+55.5625	-20.7500	5907.8468	2178263.7373	627912.6990		932.7770
F-14	987+63.5165	-20.7500	5907.8912	2178258.7459	627906.7673		940.5294
F-15	987+71.4706	-20.7500	5907.9356	2178253.8124	627900.7874		948.2818
F-16	987+79.4246	-20.7500	5907.9800	2178248.9371	627894.7599		956.0342
F-17	987+87.3786	-20.7500	5908.0244	2178244.1207	627888.6852		963.7866
F-18	987+95.3327	-20.7500	5908.0688	2178239.3636	627882.5641		971.5390
F-19	988+03.2867	-20.7500	5908.1132	2178234.6661	627876.3970		979.2914
CL PIER 4	988+11.2407	-20.7500	5908.1575	2178230.0288	627870.1845	573678.8564	987.0438
F-1	988+17.5867	-20.7500	5908.1930	2178226.3725	627865.1959		993.2288
F-2	988+23.9327	-20.7500	5908.2284	2178222.7549	627860.1791		999.4139
F-3	988+30.2786	-20.7500	5908.2638	2178219.1764	627855.1344		1005.5990
F-4	988+36.6246	-20.7500	5908.2992	2178215.6371	627850.0621		1011.7841
F-5	988+42.9706	-20.7500	5908.3346	2178212.1372	627844.9625		1017.9692
F-6	988+49.3165	-20.7500	5908.3700	2178208.6769	627839.8359		1024.1543
F-7	988+55.6625	-20.7500	5908.4054	2178205.2565	627834.6826		1030.3394
F-8	988+62.0084	-20.7500	5908.4409	2178201.8762	627829.5030		1036.5244
F-9	988+68.3544	-20.7500	5908.4763	2178198.5361	627824.2974		1042.7095
F-10	988+74.7004	-20.7500	5908.5117	2178195.2365	627819.0660		1048.8946
F-11	988+81.0463	-20.7500	5908.5471	2178191.9775	627813.8092		1055.0797
F-12	988+87.3923	-20.7500	5908.5825	2178188.7594	627808.5272		1061.2648
F-13	988+93.7383	-20.7500	5908.6179	2178185.5823	627803.2205		1067.4499
F-14	989+00.0842	-20.7500	5908.6533	2178182.4465	627797.8893		1073.6350
F-15	989+06.4302	-20.7500	5908.6887	2178179.3521	627792.5339		1079.8201
F-16	989+12.7761	-20.7500	5908.7242	2178176.2993	627787.1548		1086.0051
F-17	989+19.1221	-20.7500	5908.7596	2178173.2883	627781.7521		1092.1902
F-18	989+25.4681	-20.7500	5908.7950	2178170.3193	627776.3262		1098.3753
F-19	989+31.8140	-20.7500	5908.8304	2178167.3924	627770.8775		1104.5604
CL PIER 5	989+38.1600	-20.7500	5908.8658	2178164.5079	627765.4062	88182.8606	1110.7455
F-1	989+43.9100	-20.7500	5908.8979	2178161.9309	627760.4296		1116.3497
F-2	989+49.6600	-20.7500	5908.9300	2178159.3890	627755.4350		1121.9540
F-3	989+55.4100	-20.7500	5908.9621	2178156.8822	627750.4227		1127.5582
F-4	989+61.1600	-20.7500	5908.9942	2178154.4108	627745.3929		1133.1624
F-5	989+66.9100	-20.7500	5909.0263	2178151.9747	627740.3458		1138.7666
F-6	989+72.6600	-20.7500	5909.0583	2178149.5741	627735.2818		1144.3709
F-7	989+78.4100	-20.7500	5909.0904	2178147.2091	627730.2010		1149.9751
F-8	989+84.1600	-20.7500	5909.1225	2178144.8799	627725.1038		1155.5793
F-9	989+89.9100	-20.7500	5909.1546	2178142.5866	627719.9902		1161.1836
F-10	989+95.6600	-20.7500	5909.1867	2178140.3292	627714.8608		1166.7878
F-11	990+01.4100	-20.7500	5909.2188	2178138.1080	627709.7155		1172.3920
F-12	990+07.1600	-20.7500	5909.2509	2178135.9229	627704.5548		1177.9963
F-13	990+12.9100	-20.7500	5909.2830	2178133.7742	627699.3789		1183.6005
F-14	990+18.6600	-20.7500	5909.3150	2178131.6618	627694.1880		1189.2047
F-15	990+24.4100	-20.7500	5909.3471	2178129.5860	627688.9824		1194.8090
F-16	990+30.1600	-20.7500	5909.3792	2178127.5468	627683.7624		1200.4132
F-17	990+35.9100	-20.7500	5909.4113	2178125.5443	627678.5281		1206.0174
F-18	990+41.6600	-20.7500	5909.4434	2178123.5786	627673.2800		1211.6217
F-19	990+47.4100	-20.7500	5909.4755	2178121.6499	627668.0181		1217.2259
CL ABUT 6	990+53.1600	-20.7500	5909.5076	2178119.7581	627662.7428	82886.9787	1222.8301
BF ABUT 6	990+56.7510	-20.7500	5909.5276	2178118.5955	627659.4416	82885.7451	1226.3301
LONGITUDINAL LINE: LT. BARRIER FACE							
BF ABUT 1	984+18.5768	-19.0000	5906.0220	2178520.4968	628114.3682	177198.6258	605.6599
CL ABUT 1	984+22.1600	-19.0000	5906.0521	2178517.3558	628112.8241	177191.5374	609.1599
F-1	984+27.0600	-19.0000	5906.0923	2178513.0715	628110.6904		613.9462
F-2	984+31.9600	-19.0000	5906.1312	2178508.8000	628108.5310		618.7324
F-3	984+36.8600	-19.0000	5906.1688	2178504.5416	628106.3462		623.5187
F-4	984+41.7600	-19.0000	5906.2053	2178500.2962	628104.1359		628.3049
F-5	984+46.6600	-19.0000	5906.2404	2178496.0642	628101.9002		633.0912
F-6	984+51.5600	-19.0000	5906.2744	2178491.8457	628099.6392		637.8774
F-7	984+56.4600	-19.0000	5906.3070	2178487.6408	628097.3530		642.6637
F-8	984+61.3600	-19.0000	5906.3385	2178483.4496	628095.0416		647.4500
F-9	984+66.2600	-19.0000	5906.3687	2178479.2723	628092.7053		652.2362
F-10	984+71.1600	-19.0000	5906.3976	2178475.1091	628090.3439		657.0225
F-11	984+76.0600	-19.0000	5906.4253	2178470.9601	628087.9577		661.8087
F-12	984+80.9600	-19.0000	5906.4527	2178466.8255	628085.5167		666.5950
F-13	984+85.8600	-19.0000	5906.4800	2178462.7054	628083.1109		671.3812
F-14	984+90.7600	-19.0000	5906.5074	2178458.5999	628080.6506		676.1675
F-15	984+95.6600	-19.0000	5906.5347	2178454.5093	628078.1657		680.9538
F-16	985+00.5600	-19.0000	5906.5620	2178450.4335	628075.6564		685.7400
F-17	985+05.4600	-19.0000	5906.5894	2178446.3729	628073.1227		690.5263
F-18	985+10.3600	-19.0000	5906.6167	2178442.3275	628070.5647		695.3125
F-19	985+15.2600	-19.0000	5906.6441	2178438.2975	628067.9826		700.0988
CL PIER 2	985+20.1600	-19.0000	5906.6714	2178434.2831	628065.3764	143383.1591	704.8850
F-1	985+26.7600	-19.0000	5906.7083	2178428.9006	628061.8281		711.3318
F-2	985+33.3600	-19.0000	5906.7451	2178423.5470	628058.2366		717.7786
F-3	985+39.9600	-19.0000	5906.7819	2178418.2225	628054.6020		724.2254
F-4	985+46.5600	-19.0000	5906.8187	2178412.9274	628050.9245		730.6722
F-5	985+53.1600	-19.0000	5906.8556	2178407.6622	628047.2045		737.1190
F-6	985+59.7600	-19.0000	5906.8924	2178402.4272	628043.4422		743.5658
F-7	985+66.3600	-19.0000	5906.9292	2178397.2226	628039.6377		750.0126
F-8	985+72.9600	-19.0000	5906.9661	2178392.0490	628035.7915		756.4594
F-9	985+79.5600	-19.0000	5907.0029	2178386.9064	628031.9036		762.9062
F-10	985+86.1600	-19.0000	5907.0397	2178381.7954	628027.9744		769.3530
F-11	985+92.7600	-19.0000	5907.0766	2178376.7163	628024.0041		775.7998
F-12	985+99.3600	-19.0000	5907.1134	2178371.6693	628019.9930		782.2466
F-13	986+05.9600	-19.0000	5907.1502	2178366.6549	628015.9413		788.6934
F-14	986+12.5600	-19.0000	5907.1871	2178361.6732	628011.8493		795.1402
F-15	986+19.1600	-19.0000	5907.2239	2178356.7248	628007.7173		801.5870
F-16	986+25.7600	-19.0000	5907.2607	2178351.8098	628003.5455		808.0338
F-17	986+32.3600	-19.0000	5907.2976	2178346.9286	627999.3342		814.4806
F-18	986+38.9600	-19.0000	5907.3344	2178342.0815	627995.0837		820.9274
F-19	986+45.5600	-19.0000	5907.3712	2178337.2689	627990.7943		827.3741
CL PIER 3	986+52.1600	-19.0000	5907.4080	2178332.4910	627986.4661	116161.0750	833.8209
F-1	986+60.0223	-19.0000	5907.4519	2178326.8450	627981.2601		841.5008
F-2	986+67.8847	-19.0000	5907.4958	2178321.2493	627976.0001		849.1806
F-3	986+75.7470	-19.0000	5907.5397	2178315.7044	627970.6866		856.8605
F-4	986+83.6094	-19.0000	5907.5835	2178310.2108	627965.3201		864.5403
F-5	986+91.4717	-19.0000	5907.6274	2178304.7690	627959.9011		872.2201
F-6	986+99.3341	-19.0000	5907.6713	2178299.3794	627954.4300		879.9000
F-7	987+07.1964	-19.0000	5907.7152	2178294.0427	627948.9074		887.5798
F-8	987+15.0587	-19.0000	5907.7591	2178288.7593	627943.3338		895.2596
F-9	987+22.9211	-19.0000	5907.8029	2178283.5297	627937.7098		902.9395
F-10	987+30.7834	-19.0000	5907.8468	2178278.3543	627932.0357		910.6193
F-11	987+38.6458	-19.0000	5907.8907	2178273.2336	627926.3122		918.2991
F-12	987+46.5081	-19.0000	5907.9346	2178268.1682	627920.5398		925.9790
F-13	987+54.3705	-19.0000	5907.9784	2178263.1585	627914.7189		933.6588
F-14	987+62.2328	-19.0000	5908.0223	2178258.2049	627908.8503		941.3386
F-15	987+70.0951	-19.0000	5908.0662	2178253.3079	627902.9343		949.0185
F-16	987+77.9575	-19.0000	5908.1101	2178248.4679	627896.9716		956.6983
F-17	987+85.8198	-19.0000	5908.1539	2178243.6855	627890.9626		964.3781
F-18	987+93.6822	-19.0000	5908.1978	2178238.9610	627884.9080		972.0580
F-19	988+01.5445	-19.0000	5908.2417	2178234.2949	627878.8082		979.7378
CL PIER 4	988+09.4069	-19.0000	5908.2856	2178229.6875	627872.6640	573676.3535	987.4177
F-1	988+15.8445	-19.0000	5908.3215	2178225.9592	627867.6003		993.7059
F-2	988+22.2822	-19.0000	5908.3574	2178222.2707	627862.5075		999.9941
F-3	988+28.7198	-19.0000	5908.3933	2178218.6225	627857.3858		1006.2823
F-4	988+35.1575	-19.0000	5908.4293	2178215.0146	627852.2356		1012.5705
F-5	988+41.5951	-19.0000	5908.4652	2178211.4473	627847.0571		1018.8588
F-6	988+48.0328	-19.0000	5908.5011	2178207.9209	627841.8508		1025.1470
F-7	988+54.4705	-19.0000	5908.5370	2178204.4356	627836.6169		1031.4352
F-8	988+60.9081	-19.0000	5908.5730	2178200.9915	627831.3557		1037.7234
F-9	988+67.3458	-19.0000	5908.6089	2178197.5889	627826.0676		1044.0116
F-10	988+73.7834	-19.0000	5908.6448	2178194.2280	627820.7530		1050.2999
F-11	988+80.2211	-19.0000	5908.6807	2178190.9090	627815.4120		1056.5881
F-12	988+86.6587	-19.0000	5908.7167	2178187.6321	627810.0451		1062.8763
F-13	988+93.0964	-19.0000	5908.7526	2178184.3975	627804.6526		1069.1645
F-14	988+99.5341	-19.0000	5908.7885	2178181.2054	627799.2349		1075.4527
F-15	989+05.9717	-19.0000	5908.8244	2178178.0561	627793.7921		1081.7410
F-16	989+12.4094	-19.0000	5908.8604	2178174.9496	627788.3248		1088.0292
F-17	989+18.8470	-19.0000	5908.8963	2178171.8863	627782.8333		1094.3174
F-18	989+25.2847	-19.0000	5908.9322	2178168.8662	627777.3178		1100.6056
F-19	989+31.7223	-19.0000	5908.9681	2178165.8896	627771.7787		1106.8938
CL PIER 5	989+38.1600	-19.0000	5909.0041	2178162.9567	627766.2164	88181.1106	1113.1821
F-1	989+43.9100	-19.0000	5909.0362	2178160.3741	627761.2288		1118.7986
F-2	989+49.6600	-19.0000	5909.0682	2178157.8266	627756.2233		1124.4151
F-3	989+55.4100	-19.0000	5909.1003	2178155.3143	627751.2000		1130.0316
F-4	989+61.1600	-19.0000	5909.1324	2178152.8374	627746.1591		1135.6482
F-5	989+66.9100	-19.0000	5909.1645	2178150.3960	627741.1010		1141.2647
F-6	989+72.6600	-19.0000	5909.1966	2178147.9901	627736.0259		1146.8812
F-7	989+78.4100	-19.0000	5909.2287	2178145.6200	627730.9339		1152.4977
F-8	989+84.1600	-19.0000	5909.2608	2178143.2857	627725.8255		1158.1143
F-9	989+89.9100	-19.0000	5909.2929	2178140.9873	627720.7008		1163.7308
F-10	989+95.6600	-19.0000	5909.3249	2178138.7250	627715.5600		1169.3473
F-11	990+01.4100	-19.0000	5909.3570	2178136.4989	627710.4035		1174.9638
F-12	990+07.1600	-19.0000	5909.3891	2178134.3090	627705.2315		1180.5804
F-13	990+12.9100	-19.0000	5909.4212	2178132.1556	627700.0442		1186.1969
F-14	990+18.6600	-19.0000	5909.4533	2178130.0386	627694.8420		1191.8134
F-15	990+24.4100	-19.0000	5909.4854	2178127.9582	627689.6249		1197.4299
F-16	990+30.1600	-19.0000	5909.5175	2178125.9145	627684.3934		1203.0465
F-17	990+35.9100	-19.0000	5909.5496	2178123.9076	627679.1477		1208.6630
F-18	990+41.6600	-19.0000	5909.5816	2178121.9377	627673.8880		1214.2795
F-19	990+47.4100	-19.0000	5909.6137	2178120.0047	627668.6146		1219.8961
CL ABUT 6	990+53.1600	-19.0000	5909.6458	2178118.1088	627663.3277	82885.2287	1225.5126
BF ABUT 6	990+56.7432	-19.0000	5909.6658	2178116.9462	627660.0265	82883.9951	1229.0126
LONGITUDINAL LINE: WEB W.P. 1							
BF ABUT 1	984+18.5870	-16.7171	5906.2024	2178519.4852	628116.4147	177196.3429	607.3993
CL ABUT 1	984+22.1600	-16.7171	5906.2325	2178516.3442	628114.8706	177189.2545	610.8993
F-1	984+27.0600	-16.7171	5906.2726	2178512.0477	628112.7308		615.6992
F-2	984+31.9600	-16.7171	5906.3115	2178507.7640	628110.5653		620.4991
F-3	984+36.8600	-16.7171	5906.3492	2178503.4934	628108.3742		625.2991
F-4	984+41.7600	-16.7171	5906.3856	2178499.2359	628106.1576		630.0990
F-5	984+46.6600	-16.7171	5906.4208	2178494.9918	628103.9155		634.8989
F-6	984+51.5600	-16.7171	5906.4547	2178490.7612	628101.6481		639.6988
F-7	984+56.4600	-16.7171	5906.4874	2178486.5443	628099.3553		644.4987
F-8	984+61.3600	-16.7171	5906.5188	2178482.3412	628097.0374		649.2987
F-9	984+66.2600	-16.7171	5906.5490	2178478.1520	628094.6944		654.0986
F-10	984+71.1600	-16.7171	5906.5779	2178473.9769	628092.3263		658.8985
F-11	984+76.0600	-16.7171	5906.6057	2178469.8161	628089.9332		663.6984
F-12	984+80.9600	-16.7171	5906.6330	2178465.6696	628087.5153		668.4984
F-13	984+85.8600	-16.7171	5906.6604	2178461.5377	628085.0726		673.2983
F.S. 1	984+90.5558	-16.7171	5906.6866	2178457.5918	628082.7086	151932.5509	677.8982
F-14	984+90.7600	-16.7171	5906.6877	2178457.4206	628082.6052		678.0982
F-15	984+95.6600	-16.7171	5906.7150	2178453.3182	628080.1133		682.8981
F-16	985+00.5600	-16.7171	5906.7424	2178449.2309	628077.5968		687.6981
F-17	985+05.4600	-16.7171	5906.7697	2178445.1586	628075.0559		692.4980
F-18	985+10.3600	-16.7171	5906.7971	2178441.1017	628072.4906		697.2979
F-19	985+15.2600	-16.7171	5906.8244	2178437.0602	628069.9011		702.0978
CL PIER 2	985+20.1600	-16.7171	5906.8518	2178433.0343	628067.2875	143380.8762	706.8978
F-1	985+26.7600	-16.7171	5906.8866	2178427.6365	628063.7291		713.3630
F-2	985+33.3600	-16.7171	5906.9254	2178422.2675	628060.1272		719.8282
F-3	985+39.9600	-16.7171	5906.9623	2178416.9278	628056.4822		726.2934
F-4	985+46.5600	-16.7171	5906.9991	2178411.6177	628052.7943		732.7586
F.S. 2	985+49.7642	-16.7171	5907.0170	2178409.0504	628050.9885	135905.3847	735.8973
F-5	985+53.1600	-16.7171	5907.0359	2178406.3374	628049.0637		739.2238
F-6	985+59.7600	-16.7171	5907.07[illegible]	2178401.0874	628045.2706		745.[illegible]
F-7	985+66.3600	-16.7171	5907.10[illegible]	2178395.8680	628041.4[illegible]		752.1[illegible]
F-8	985+72.9600	-16.7171	5907.14[illegible]	2178390.6796	62803[illegible]		758.[illegible]
F-9	985+79.5600	-16.7171	5907.1[illegible]	2178385.5724	62803[illegible]		765.08[illegible]
F-10	985+86.1600	-16.7171	5907.2201	2178380.3968	62802[illegible].7755		771.549
F-11	985+92.7600	-16.7171	5907.2569	2178375.3031	62802[illegible]		778.015
F-12	985+99.3600	-16.7171	5907.2937	2178370.2417	62802[illegible]		784.480
F-13	986+05.9600	-16.7171	5907.3306	2178365.2130	62801[illegible]		790.91[illegible]
F-14	986+12.5600	-16.7171	5907.3674	2178360.2171	628013.6075		797.410
F.S. 3	986+16.1308	-16.7171	5907.3890	2178357.3026	628011.1821	122151.0802	801.207
F-15	986+19.1600	-16.7171	5907.4042	2178355.2545	628009.4637		803.875
F-16	986+25.7600	-16.7171	5907.4411	2178350.3255	628005.2200		810.341
F-17	986+32.3600	-16.7171	5907.4779	2178345.4304	628001.0567		816.806
F-18	986+38.9600	-16.7171	5907.5147	2178340.5634	627996.7940		823.271
F-19	986+45.5600	-16.7171	5907.5516	2178335.7431	627992.4923		829.736
CL PIER 3	986+52.1600	-16.7171	5907.5804	2178330.9515	627988.1519	116158.7921	836.201
F-1	986+59.9036	-16.7171	5907.6316	2178325.3745	627983.0102		843.787
F-2	986+67.6473	-16.7171	5907.6748	2178319.8465	627977.8161		851.372
F-3	986+75.3909	-16.7171	5907.7180	2178314.3676	627972.5698		858.958
F-4	986+83.1346	-16.7171	5907.7612	2178308.9389	627967.2720		866.543
F.S. 4	986+85.9256	-16.7171	5907.7768	2178306.9945	627965.3499	111196.3170	869.277
F-5	986+90.8782	-16.7171	5907.8045	2178303.5605	627961.9230		874.129
F-6	986+98.6218	-16.7171	5907.8477	2178298.2329	627956.5234		881.714
F-7	987+06.3655	-16.7171	5907.8909	2178292.9566	627951.0737		889.300
F-8	987+14.1091	-16.7171	5907.9341	2178287.7321	627945.5742		896.885
F-9	987+21.8528	-16.7171	5907.9773	2178282.5598	627940.0256		904.471
F-10	987+29.5964	-16.7171	5908.0205	2178277.4403	627934.4283		912.056
F-11	987+37.3400	-16.7171	5908.0637	2178272.3740	627928.7828		919.642
F-12	987+45.0837	-16.7171	5908.1070	2178267.3613	627923.0897		927.227
F-13	987+52.8273	-16.7171	5908.1502	2178262.4027	627917.3493		934.813
F-14	987+60.5710	-16.7171	5908.1934	2178257.4986	627911.5624		942.398
F-15	987+68.3146	-16.7171	5908.2366	2178252.6495	627905.7292		949.984
F.S. 6	987+68.4412	-16.7171	5908.2373	2178252.5707	627905.6335	101350.2363	950.108
F-16	987+76.0582	-16.7171	5908.2798	2178247.8558	627899.8505		957.569
F-17	987+83.8019	-16.7171	5908.3230	2178243.1179	627893.9267		965.155
F-18	987+91.5455	-16.7171	5908.3662	2178238.4363	627887.9583		972.740
F-19	987+99.2892	-16.7171	5908.4094	2178233.8113	627881.9459		980.326
CL PIER 4	988+07.0328	-16.7171	5908.4527	2178229.2435	627875.8900	573673.0971	987.911
F-1	988+13.5892	-16.7171	5908.4892	2178225.4209	627870.7291		994.334
F-2	988+20.1455	-16.7171	5908.5258	2178221.6398	627865.5376		1000.756
F-3	988+26.7019	-16.7171	5908.5624	2178217.9004	627860.3161		1007.178
F-4	988+33.2582	-16.7171	5908.5990	2178214.2029	627855.0648		1013.601
F.S. 8	988+34.7954	-16.7171	5908.6076	2178213.3421	627853.8293	95262.8694	1015.107
F-5	988+39.8146	-16.7171	5908.6356	2178210.5476	627849.7840		1020.023
F-6	988+46.3710	-16.7171	5908.6722	2178206.9348	627844.4741		1026.446
F-7	988+52.9273	-16.7171	5908.7088	2178203.3645	627839.1354		1032.868
F-8	988+59.4837	-16.7171	5908.7454	2178199.8372	627833.7683		1039.291
F-9	988+66.0400	-16.7171	5908.7819	2178196.3530	627828.3732		1045.713
F-10	988+72.5964	-16.7171	5908.8185	2178192.9121	627822.9503		1052.136
F-11	988+79.1528	-16.7171	5908.8551	2178189.5147	627817.5000		1058.558
F-12	988+85.7091	-16.7171	5908.8917	2178186.1611	627812.0227		1064.981
F-13	988+92.2655	-16.7171	5908.9283	2178182.8515	627806.5187		1071.403
F-14	988+98.8218	-16.7171	5908.9649	2178179.5861	627800.9883		1077.825
F.S. 9	989+04.4725	-16.7171	5908.9964	2178176.8074	627796.2011	90211.6983	1083.361
F-15	989+05.3782	-16.7171	5909.0015	2178176.3650	627795.4320		1084.248
F-16	989+11.9346	-16.7171	5909.0381	2178173.1886	627789.8500		1090.670
F-17	989+18.4909	-16.7171	5909.0747	2178170.0570	627784.2428		1097.093
F-18	989+25.0473	-16.7171	5909.1112	2178166.9705	627778.6107		1103.515
F-19	989+31.6036	-16.7171	5909.1478	2178163.9291	627772.9541		1109.938
CL PIER 5	989+38.1600	-16.7171	5909.1844	2178160.9331	627767.2732	88178.8277	1116.360
F-1	989+43.9100	-16.7171	5909.2165	2178158.3432	627762.2714		1121.993
F-2	989+49.6600	-16.7171	5909.2486	2178155.7884	627757.2516		1127.625
F-3	989+55.4100	-16.7171	5909.2807	2178153.2690	627752.2139		1133.258
F-4	989+61.1600	-16.7171	5909.3128	2178150.7850	627747.1587		1138.890
F-5	989+66.9100	-16.7171	5909.3449	2178148.3366	627742.0861		1144.523
F-6	989+72.6600	-16.7171	5909.3769	2178145.9239	627736.9965		1150.156
F.S. 10	989+74.9100	-16.7171	5909.3895	2178144.9895	627735.0003	86226.4690	1152.360
F-7	989+78.4100	-16.7171	5909.4090	2178143.5470	627731.8900		1155.786
F-8	989+84.1600	-16.7171	5909.4411	2178141.2060	627726.7670		1161.421
F-9	989+89.9100	-16.7171	5909.4732	2178138.9011	627721.6276		1167.053
F-10	989+95.6600	-16.7171	5909.5053	2178136.6323	627716.4722		1172.686
F-11	990+01.4100	-16.7171	5909.5374	2178134.3998	627711.3010		1178.318
F-12	990+07.1600	-16.7171	5909.5695	2178132.2037	627706.1142		1183.951
F-13	990+12.9100	-16.7171	5909.6016	2178130.0441	627700.9121		1189.583
F-14	990+18.6600	-16.7171	5909.6336	2178127.9210	627695.6950		1195.216
F-15	990+24.4100	-16.7171	5909.6657	2178125.8347	627690.4631		1200.849
F-16	990+30.1600	-16.7171	5909.6978	2178123.7852	627685.2166		1206.481
F-17	990+35.9100	-16.7171	5909.7299	2178121.7726	627679.9559		1212.114
F-18	990+41.6600	-16.7171	5909.7620	2178119.7970	627674.6812		1217.746
F-19	990+47.4100	-16.7171	5909.7941	2178117.8585	627669.3928		1223.379
CL ABUT 6	990+53.1600	-16.7171	5909.8262	2178115.9572	627664.0908	82882.9458	1229.011
BF ABUT 6	990+56.7330	-16.7171	5909.8461	2178114.7945	627660.7896	82881.7122	1232.511
LONGITUDINAL LINE: WEB W.P. 2							
BF ABUT 1	984+18.6200	-9.2401	5906.7934	2178516.1720	628123.1176	177188.8658	613.096
CL ABUT 1	984+22.1600	-9.2401	5906.8232	2178513.0310	628121.5735	177181.7775	616.596
F-1	984+27.0600	-9.2401	5906.8633	2178508.6944	628119.4137		621.440
F-2	984+31.9600	-9.2401	5906.9022	2178504.3708	628117.2280		626.285
F-3	984+36.8600	-9.2401	5906.9399	2178500.0603	628115.0165		631.130
F-4	984+41.7600	-9.2401	5906.9763	2178495.7632	628112.7792		635.974
F-5	984+46.6600	-9.2401	5907.0115	2178491.4795	628110.5162		640.819
F-6	984+51.5600	-9.2401	5907.0454	2178487.2095	628108.2276		645.664
F-7	984+56.4600	-9.2401	5907.0781	2178482.9532	628105.9135		650.508

NOTE: ELEVATIONS ARE AT TOP OF CONCRETE DECK 0.1667 FEET BELOW FINISHED GRADE.

E-470
Engineer 470 Partnership

DIVISION OF HIGHWAYS

I-25/470 INTERCHANGE
RAMP E FLYOVER
BRIDGE DECK ELEVATIONS

Designer	J. Stapleton	Structure Numbers	F-17-JW
Detailer	D. Kurschinski		

Drawing Number B-12 of 45 Drawings

Revision Dates | (Preliminary Stage Only)

INITIAL	DATE	CHECKED BY
DESIGNED BY		QUANTITIES BY
CHECKED BY		CHECKED BY
DETAILED BY		

STATE OF COLORADO
STATE DEPARTMENT OF HIGHWAYS
DIVISION OF HIGHWAYS:
D. O. H. FORM NO. 126:
REV. FEB. 1984

BRIDGE DECK ELEVATIONS

	REVISIONS	
A-1 4-2-90	Revised Geometry	J.L.S.

AS CONSTRUCTED

NO REVISIONS ☐ REVISED ☐ VOID ☐

FED. ROAD REGION	DIVISION	PROJ. NO.	SHEET NO.	SHEET TOTAL
VIII	COLORADO	IA06	153	

41

BENT LINE DESCRIPTION OR FRACTIONAL POINT DESIGNATION	STATION	OFFSET	ELEVATION	COORDINATES FROM LAYOUT LINE EAST	COORDINATES FROM LAYOUT LINE NORTH	BENT LINE LENGTH FROM N-GRID or OFFSET FROM EXTERIOR GIRDER	GIRDER LINE LENGTH
F-8	984+61.3600	-9.2401	5907.1095	2178478.7109	628103.5739		655.3536
F-9	984+66.2600	-9.2401	5907.1397	2178474.4826	628101.2090		660.1983
F-10	984+71.1600	-9.2401	5907.1686	2178470.2686	628098.8189		665.0430
F-11	984+76.0600	-9.2401	5907.1964	2178466.0690	628096.4035		669.8877
F-12	984+80.9600	-9.2401	5907.2237	2178461.8838	628093.9631		674.7323
F-13	984+85.8600	-9.2401	5907.2510	2178457.7134	628091.4976		679.5770
F.S. 1	984+90.5558	-9.2401	5907.2772	2178453.7307	628089.1115	151925.0739	684.2198
F-14	984+90.7600	-9.2401	5907.2784	2178453.5578	628089.0072		684.4217
F-15	984+95.6600	-9.2401	5907.3057	2178449.4172	628086.4920		689.2664
F-16	985+00.5600	-9.2401	5907.3331	2178445.2918	628083.9520		694.1111
F-17	985+05.4600	-9.2401	5907.3604	2178441.1816	628081.3874		698.9558
F-18	985+10.3600	-9.2401	5907.3878	2178437.0868	628078.7982		703.8004
F-19	985+15.2600	-9.2401	5907.4151	2178433.0076	628076.1846		708.6451
CL PIER 2	985+20.1600	-9.2401	5907.4425	2178428.9442	628073.5466	143373.3992	713.4898
F-1	985+26.7600	-9.2401	5907.4793	2178423.4960	628069.9550		720.0153
F-2	985+33.3600	-9.2401	5907.5161	2178418.0770	628066.3156		726.5408
F-3	985+39.9600	-9.2401	5907.5529	2178412.6875	628062.6406		733.0663
F-4	985+46.5600	-9.2401	5907.5898	2178407.3278	628058.9183		739.5918
F.S. 2	985+49.7642	-9.2401	5907.6077	2178404.7367	628057.0956	135897.9077	742.7598
F-5	985+53.1600	-9.2401	5907.6266	2178401.9983	628055.1528		746.1173
F-6	985+59.7600	-9.2401	5907.6634	2178396.6994	628051.3446		752.6428
F-7	985+66.3600	-9.2401	5907.7003	2178391.4313	628047.4937		759.1683
F-8	985+72.9600	-9.2401	5907.7371	2178386.1945	628043.6005		765.6938
F-9	985+79.5600	-9.2401	5907.7739	2178380.9892	628039.6651		772.2193
F-10	985+86.1600	-9.2401	5907.8108	2178375.8158	628035.6880		778.7447
F-11	985+92.7600	-9.2401	5907.8476	2178370.6746	628031.6692		785.2702
F-12	985+99.3600	-9.2401	5907.8844	2178365.5661	628027.6091		791.7957
F-13	986+05.9600	-9.2401	5907.9213	2178360.4904	628023.5080		798.3212
F-14	986+12.5600	-9.2401	5907.9581	2178355.4480	628019.3660		804.8467
F.S. 3	986+16.4308	-9.2401	5907.9797	2178352.5062	628016.9180	122143.6032	808.6738
F-15	986+19.1600	-9.2401	5907.9949	2178350.4391	628015.1836		811.3722
F-16	986+25.7600	-9.2401	5908.0318	2178345.4641	628010.9609		817.8977
F-17	986+32.3600	-9.2401	5908.0686	2178340.5233	628006.6982		824.4232
F-18	986+38.9600	-9.2401	5908.1054	2178335.6171	628002.3958		830.9487
F-19	986+45.5600	-9.2401	5908.1422	2178330.7457	627998.0540		837.4742
CL PIER 3	986+52.1600	-9.2401	5908.1791	2178325.9094	627993.6730	116151.3151	843.9997
F-1	986+59.5219	-9.2401	5908.2202	2178320.5568	627988.7405		851.2785
F-2	986+66.8838	-9.2401	5908.2612	2178315.2487	627983.7600		858.5573
F-3	986+74.2457	-9.2401	5908.3023	2178309.9857	627978.7320		865.8361
F-4	986+81.6077	-9.2401	5908.3434	2178304.7680	627973.6569		873.1149
F.S. 4	986+85.9256	-9.2401	5908.3675	2178301.7291	627970.6584	111188.8400	877.3841
F-5	986+88.9696	-9.2401	5908.3845	2178299.5963	627968.5350		880.3937
F-6	986+96.3315	-9.2401	5908.4256	2178294.4708	627963.3669		887.6725
F-7	987+03.6934	-9.2401	5908.4667	2178289.3920	627958.1528		894.9513
F-8	987+11.0553	-9.2401	5908.5077	2178284.3603	627952.8933		902.2301
F-9	987+18.4172	-9.2401	5908.5488	2178279.3761	627947.5887		909.5089
F-10	987+25.7791	-9.2401	5908.5899	2178274.4398	627942.2395		916.7877
F-11	987+33.1411	-9.2401	5908.6310	2178269.5518	627936.8461		924.0666
F-12	987+40.5030	-9.2401	5908.6721	2178264.7126	627931.4090		931.3454
F-13	987+47.8649	-9.2401	5908.7132	2178259.9224	627925.9286		938.6242
F-14	987+55.2268	-9.2401	5908.7542	2178255.1817	627920.4053		945.9030
F-15	987+62.5887	-9.2401	5908.7953	2178250.4909	627914.8396		953.1818
F.S. 6	987+68.4412	-9.2401	5908.8280	2178246.7977	627910.3851	101342.7593	958.9682
F-16	987+69.9506	-9.2401	5908.8364	2178245.8503	627909.2320		960.4606
F-17	987+77.3126	-9.2401	5908.8775	2178241.2604	627903.5828		967.7394
F-18	987+84.6745	-9.2401	5908.9186	2178236.7215	627897.8926		975.0182
F-19	987+92.0364	-9.2401	5908.9597	2178232.2339	627892.1618		982.2970
CL PIER 4	987+99.3983	-9.2401	5909.0007	2178227.7980	627886.3908	573662.4973	989.5758
F-1	988+06.3364	-9.2401	5909.0395	2178223.6652	627880.9158		996.4356
F-2	988+13.2745	-9.2401	5909.0782	2178219.5789	627875.4059		1003.2953
F-3	988+20.2126	-9.2401	5909.1169	2178215.5395	627869.8616		1010.1551
F-4	988+27.1506	-9.2401	5909.1556	2178211.5473	627864.2833		1017.0149
F-5	988+34.0887	-9.2401	5909.1943	2178207.6024	627858.6713		1023.8746
F.S. 8	988+34.7954	-9.2401	5909.1983	2178207.2033	627858.0978	95255.3924	1024.5733
F-6	988+41.0268	-9.2401	5909.2330	2178203.7053	627853.0261		1030.7344
F-7	988+47.9649	-9.2401	5909.2718	2178199.8562	627847.3481		1037.5941
F-8	988+54.9030	-9.2401	5909.3105	2178196.0553	627841.6376		1044.4539
F-9	988+61.8411	-9.2401	5909.3492	2178192.3030	627835.8951		1051.3137
F-10	988+68.7791	-9.2401	5909.3879	2178188.5994	627830.1210		1058.1734
F-11	988+75.7172	-9.2401	5909.4266	2178184.9450	627824.3158		1065.0332
F-12	988+82.6553	-9.2401	5909.4654	2178181.3399	627818.4797		1071.8930
F-13	988+89.5934	-9.2401	5909.5041	2178177.7844	627812.6133		1078.7527
F-14	988+96.5315	-9.2401	5909.5428	2178174.2787	627806.7170		1085.6125
F-15	989+03.4696	-9.2401	5909.5815	2178170.8232	627800.7912		1092.4722
F.S. 9	989+04.4725	-9.2401	5909.5871	2178170.3278	627799.9322	90204.2213	1093.4638
F-16	989+10.4077	-9.2401	5909.6202	2178167.4180	627794.8363		1099.3320
F-17	989+17.3457	-9.2401	5909.6589	2178164.0634	627788.8528		1106.1918
F-18	989+24.2838	-9.2401	5909.6977	2178160.7596	627782.8410		1113.0515
F-19	989+31.2219	-9.2401	5909.7364	2178157.5070	627776.8015		1119.9113
CL PIER 5	989+38.1600	-9.2401	5909.7751	2178154.3056	627770.7346	88171.3507	1126.7710
F-1	989+43.9100	-9.2401	5909.8072	2178151.6915	627765.6862		1132.4561
F-2	989+49.6600	-9.2401	5909.8393	2178149.1129	627760.6195		1138.1412
F-3	989+55.4100	-9.2401	5909.8714	2178146.5700	627755.5349		1143.8263
F-4	989+61.1600	-9.2401	5909.9034	2178144.0628	627750.4325		1149.5114
F-5	989+66.9100	-9.2401	5909.9355	2178141.5916	627745.3126		1155.1965
F-6	989+72.6600	-9.2401	5909.9676	2178139.1563	627740.1755		1160.8816
F.S. 10	989+74.9100	-9.2401	5909.9802	2178138.2133	627738.1607	86218.9920	1163.1062
F-7	989+78.4100	-9.2401	5909.9997	2178136.7573	627735.0214		1166.5667
F-8	989+84.1600	-9.2401	5910.0318	2178134.3945	627729.8506		1172.2518
F-9	989+89.9100	-9.2401	5910.0639	2178132.0681	627724.6634		1177.9368
F-10	989+95.6600	-9.2401	5910.0960	2178129.7781	627719.4599		1183.6219
F-11	990+01.4100	-9.2401	5910.1281	2178127.5248	627714.2404		1189.3070
F-12	990+07.1600	-9.2401	5910.1602	2178125.3082	627709.0053		1194.9921
F-13	990+12.9100	-9.2401	5910.1922	2178123.1285	627703.7547		1200.6772
F-14	990+18.6600	-9.2401	5910.2243	2178120.9857	627698.4889		1206.3623
F-15	990+24.4100	-9.2401	5910.2564	2178118.8799	627693.2082		1212.0474
F-16	990+30.1600	-9.2401	5910.2885	2178116.8112	627687.9128		1217.7325
F-17	990+35.9100	-9.2401	5910.3206	2178114.7799	627682.6031		1223.4176
F-18	990+41.6600	-9.2401	5910.3527	2178112.7858	627677.2791		1229.1026
F-19	990+47.4100	-9.2401	5910.3848	2178110.8293	627671.9414		1234.7877
CL ABUT 6	990+53.1600	-9.2401	5910.4169	2178108.9102	627666.5900	82875.4688	1240.4728
BF ABUT 6	990+56.7000	-9.2401	5910.4366	2178107.7475	627663.2887	82874.2351	1243.9728

LONGITUDINAL LINE: WEB W.P. 3

BENT LINE DESCRIPTION OR FRACTIONAL POINT DESIGNATION	STATION	OFFSET	ELEVATION	EAST	NORTH	BENT LINE LENGTH FROM N-GRID or OFFSET FROM EXTERIOR GIRDER	GIRDER LINE LENGTH
BF ABUT 1	984+18.6524	-1.7631	5907.3843	2178512.8587	628129.8205	177181.3887	618.7930
CL ABUT 1	984+22.1600	-1.7631	5907.4138	2178509.7178	628128.2763	177174.3005	622.2930
F-1	984+27.0600	-1.7631	5907.4540	2178505.3411	628126.0966		627.1824
F-2	984+31.9600	-1.7631	5907.4929	2178500.9775	628123.8907		632.0719
F-3	984+36.8600	-1.7631	5907.5306	2178496.6272	628121.6587		636.9613
F-4	984+41.7600	-1.7631	5907.5670	2178492.2904	628119.4008		641.8507
F-5	984+46.6600	-1.7631	5907.6021	2178487.9672	628117.1169		646.7402
F-6	984+51.5600	-1.7631	5907.6361	2178483.6577	628114.8071		651.6296
F-7	984+56.4600	-1.7631	5907.6687	2178479.3621	628112.4717		656.5191
F-8	984+61.3600	-1.7631	5907.7002	2178475.0806	628110.1105		661.4085
F-9	984+66.2600	-1.7631	5907.7304	2178470.8132	628107.7237		666.2980
F-10	984+71.1600	-1.7631	5907.7593	2178466.5603	628105.3115		671.1874
F-11	984+76.0600	-1.7631	5907.7870	2178462.3218	628102.8738		676.0769
F-12	984+80.9600	-1.7631	5907.8144	2178458.0981	628100.4108		680.9663
F-13	984+85.8600	-1.7631	5907.8417	2178453.8891	628097.9226		685.8558
F.S. 1	984+90.5558	-1.7631	5907.8679	2178449.8696	628095.5144	151917.5969	690.5414
F-14	984+90.7600	-1.7631	5907.8691	2178449.6951	628095.4092		690.7452
F-15	984+95.6600	-1.7631	5907.8964	2178445.5163	628092.8707		695.6346
F-16	985+00.5600	-1.7631	5907.9238	2178441.3527	628090.3073		700.5241
F-17	985+05.4600	-1.7631	5907.9511	2178437.2045	628087.7190		705.4135
F-18	985+10.3600	-1.7631	5907.9784	2178433.0719	628085.1059		710.3030
F-19	985+15.2600	-1.7631	5908.0058	2178428.9551	628082.4681		715.1924
CL PIER 2	985+20.1600	-1.7631	5908.0331	2178424.8541	628079.8057	143365.9222	720.0819
F-1	985+26.7600	-1.7631	5908.0700	2178419.3556	628076.1809		726.6677
F-2	985+33.3600	-1.7631	5908.1068	2178413.8865	628072.5119		733.2534
F-3	985+39.9600	-1.7631	5908.1436	2178408.4472	628068.7989		739.8392
F-4	985+46.5600	-1.7631	5908.1805	2178403.0380	628065.0422		746.4250
F.S. 2	985+49.7642	-1.7631	5908.1983	2178400.4229	628063.2027	135890.4307	749.6223
F-5	985+53.1600	-1.7631	5908.2173	2178397.6593	628061.2420		753.0108
F-6	985+59.7600	-1.7631	5908.2541	2178392.3114	628057.3986		759.5966
F-7	985+66.3600	-1.7631	5908.2910	2178386.9946	628053.5121		766.1824
F-8	985+72.9600	-1.7631	5908.3278	2178381.7094	628049.5829		772.7681
F-9	985+79.5600	-1.7631	5908.3646	2178376.4560	628045.6112		779.3539
F-10	985+86.1600	-1.7631	5908.4014	2178371.2348	628041.5973		785.9397
F-11	985+92.7600	-1.7631	5908.4383	2178366.0462	628037.5414		792.5255
F-12	985+99.3600	-1.7631	5908.4751	2178360.8904	628033.4438		799.1113
F-13	986+05.9600	-1.7631	5908.5119	2178355.7678	628029.3048		805.6971
F-14	986+12.5600	-1.7631	5908.5488	2178350.6788	628025.1246		812.2828
F.S. 3	986+16.4308	-1.7631	5908.5704	2178347.7099	628022.6539	122136.1262	816.1453
F-15	986+19.1600	-1.7631	5908.5856	2178345.6236	628020.9035		818.8686
F-16	986+25.7600	-1.7631	5908.6224	2178340.6027	628016.6417		825.4544
F-17	986+32.3600	-1.7631	5908.6593	2178335.6163	628012.3397		832.0402
F-18	986+38.9600	-1.7631	5908.6961	2178330.6647	628007.9975		838.6260
F-19	986+45.5600	-1.7631	5908.7329	2178325.7483	628003.6156		845.2118
CL PIER 3	986+52.1600	-1.7631	5908.7698	2178320.8674	627999.1942	116143.8381	851.7975
F-1	986+59.1506	-1.7631	5908.8088	2178315.7367	627994.4683		858.7731
F-2	986+66.1412	-1.7631	5908.8478	2178310.6465	627989.6988		865.7486
F-3	986+73.1318	-1.7631	5908.8868	2178305.5973	627984.8860		872.7242
F-4	986+80.1224	-1.7631	5908.9258	2178300.5893	627980.0303		879.6997
F.S. 4	986+85.9256	-1.7631	5908.9582	2178296.4636	627975.9669	111181.3630	885.4904
F-5	986+87.1130	-1.7631	5908.9648	2178295.6230	627975.1320		886.6752
F-6	986+94.1036	-1.7631	5909.0038	2178290.6987	627970.1914		893.6508
F-7	987+01.0942	-1.7631	5909.0428	2178285.8168	627965.2089		900.6263
F-8	987+08.0848	-1.7631	5909.0818	2178280.9776	627960.1850		907.6018
F-9	987+15.0754	-1.7631	5909.1209	2178276.1815	627955.1199		914.5774
F-10	987+22.0660	-1.7631	5909.1599	2178271.4289	627950.0140		921.5529
F-11	987+29.0566	-1.7631	5909.1989	2178266.7200	627944.8677		928.5285
F-12	987+36.0472	-1.7631	5909.2379	2178262.0552	627939.6814		935.5040
F-13	987+43.0377	-1.7631	5909.2769	2178257.4349	627934.4554		942.4795
F-14	987+50.0283	-1.7631	5909.3159	2178252.8594	627929.1902		949.4551
F.S. 5	987+55.2590	-1.7631	5909.3451	2178249.4654	627925.2251	102721.1255	954.6745
F-15	987+57.0189	-1.7631	5909.3549	2178248.3291	627923.8861		956.4306
F-16	987+64.0095	-1.7631	5909.3939	2178243.8442	627918.5435		963.4061
F-17	987+71.0001	-1.7631	5909.4329	2178239.4051	627913.1627		970.3817
F-18	987+77.9907	-1.7631	5909.4720	2178235.0121	627907.7443		977.3572
F-19	987+84.9813	-1.7631	5909.5110	2178230.6655	627902.2885		984.3328
CL PIER 4	987+91.9719	-1.7631	5909.5500	2178226.3657	627896.7958	573651.9941	991.3083
F-1	987+99.2813	-1.7631	5909.5908	2178221.9202	627891.0136		998.6020
F-2	988+06.5907	-1.7631	5909.6316	2178217.5265	627885.1919		1005.8956
F-3	988+13.9001	-1.7631	5909.6723	2178213.1849	627879.3312		1013.1893
F-4	988+21.2095	-1.7631	5909.7131	2178208.8958	627873.4320		1020.4829
F.S. 7	988+23.6103	-1.7631	5909.7266	2178207.4940	627871.4795	96177.9045	1022.8865
F-5	988+28.5189	-1.7631	5909.7539	2178204.6596	627867.4947		1027.7766
F-6	988+35.8283	-1.7631	5909.7947	2178200.4766	627861.5198		1035.0703
F-7	988+43.1377	-1.7631	5909.8355	2178196.3471	627855.5077		1042.3639
F-8	988+50.4472	-1.7631	5909.8763	2178192.2714	627849.4591		1049.6576
F-9	988+57.7566	-1.7631	5909.9171	2178188.2500	627843.3743		1056.9512
F-10	988+65.0660	-1.7631	5909.9579	2178184.2830	627837.2538		1064.2449
F-11	988+72.3754	-1.7631	5909.9987	2178180.3708	627831.0981		1071.5386
F-12	988+79.6848	-1.7631	5910.0395	2178176.5138	627824.9078		1078.8322
F-13	988+86.9942	-1.7631	5910.0803	2178172.7122	627818.6833		1086.1259
F-14	988+94.3036	-1.7631	5910.1210	2178168.9663	627812.4250		1093.4195
F-15	989+01.6130	-1.7631	5910.1618	2178165.2765	627806.1336		1100.7132
F.S. 9	989+04.4725	-1.7631	5910.1778	2178163.8483	627803.6634	90196.7443	1103.5665
F-16	989+08.9224	-1.7631	5910.2026	2178161.6430	627799.8094		1108.0068
F-17	989+16.2318	-1.7631	5910.2434	2178158.0661	627793.4531		1115.3005
F-18	989+23.5412	-1.7631	5910.2842	2178154.5462	627787.0651		1122.5942
F-19	989+30.8506	-1.7631	5910.3250	2178151.0834	627780.6458		1129.8878
CL PIER 5	989+38.1600	-1.7631	5910.3658	2178147.6780	627774.1960	88163.8737	1137.1815
F-1	989+43.9100	-1.7631	5910.3979	2178145.0398	627769.1009		1142.9191
F-2	989+49.6600	-1.7631	5910.4300	2178142.4374	627763.9875		1148.6567
F-3	989+55.4100	-1.7631	5910.4620	2178139.8709	627758.8558		1154.3943
F-4	989+61.1600	-1.7631	5910.4941	2178137.3406	627753.7063		1160.1319
F-5	989+66.9100	-1.7631	5910.5262	2178134.8465	627748.5391		1165.8696
F-6	989+72.6600	-1.7631	5910.5583	2178132.3888	627743.3546		1171.6072
F.S. 10	989+74.9100	-1.7631	5910.5709	2178131.4370	627741.3211	86211.5150	1173.8523
F-7	989+78.4100	-1.7631	5910.5904	2178129.9676	627738.1529		1177.3448
F-8	989+84.1600	-1.7631	5910.6225	2178127.5830	627732.9343		1183.0824
F-9	989+89.9100	-1.7631	5910.6546	2178125.2351	627727.6991		1188.8200
F-10	989+95.6600	-1.7631	5910.6867	2178122.9240	627722.4475		1194.5576
F-11	990+01.4100	-1.7631	5910.7187	2178120.6498	627717.1798		1200.2952
F-12	990+07.1600	-1.7631	5910.7508	2178118.4128	627711.8963		1206.0329
F-13	990+12.9100	-1.7631	5910.7829	2178116.2129	627706.5972		1211.7705
F-14	990+18.6600	-1.7631	5910.8150	2178114.0503	627701.2828		1217.5081
F-15	990+24.4100	-1.7631	5910.8471	2178111.9250	627695.9533		1223.2457
F-16	990+30.1600	-1.7631	5910.8792	2178109.8373	627690.6090		1228.9833
F-17	990+35.9100	-1.7631	5910.9113	2178107.7871	627685.2502		1234.7209
F-18	990+41.6600	-1.7631	5910.9434	2178105.7747	627679.8771		1240.4585
F-19	990+47.4100	-1.7631	5910.9754	2178103.8000	627674.4900		1246.1962
CL ABUT 6	990+53.1600	-1.7631	5911.0075	2178101.8633	627669.0891	82867.9918	1251.9338
BF ABUT 6	990+56.6676	-1.7631	5911.0271	2178100.7005	627665.7879	82866.7581	1255.4338

LONGITUDINAL LINE: HORIZ. CONT. LINE

BENT LINE DESCRIPTION OR FRACTIONAL POINT DESIGNATION	STATION	OFFSET	ELEVATION	EAST	NORTH	BENT LINE LENGTH FROM N-GRID or OFFSET FROM EXTERIOR GIRDER	GIRDER LINE LENGTH
BF ABUT 1	984+18.6600	0.0000	5907.5237	2178512.0774	628131.4011	177179.6256	620.1363
CL ABUT 1	984+22.1600	0.0000	5907.5531	2178508.9365	628129.8569	177172.5374	623.6363
F-1	984+27.0600	0.0000	5907.5933	2178504.5504	628127.6724		628.5363
F-2	984+31.9600	0.0000	5907.6322	2178500.1774	628125.4618		633.4363
F-3	984+36.8600	0.0000	5907.6698	2178495.8177	628123.2250		638.3363
F-4	984+41.7600	0.0000	5907.7063	2178491.4715	628120.9622		643.2363
F-5	984+46.6600	0.0000	5907.7414	2178487.1389	628118.6733		648.1363
F-6	984+51.5600	0.0000	5907.7754	2178482.8202	628116.3586		653.0363
F-7	984+56.4600	0.0000	5907.8080	2178478.5153	628114.0181		657.9363
F-8	984+61.3600	0.0000	5907.8395	2178474.2245	628111.6518		662.8363
F-9	984+66.2600	0.0000	5907.8697	2178469.9480	628109.2599		667.7363
F-10	984+71.1600	0.0000	5907.8986	2178465.6858	628106.8425		672.6363
F-11	984+76.0600	0.0000	5907.9263	2178461.4383	628104.3995		677.5363
F-12	984+80.9600	0.0000	5907.9537	2178457.2054	628101.9312		682.4363
F-13	984+85.8600	0.0000	5907.9810	2178452.9873	628099.4376		687.3363
F-14	984+90.7600	0.0000	5908.0084	2178448.7843	628096.9188		692.2363
F-15	984+95.6600	0.0000	5908.0357	2178444.5964	628094.3748		697.1363
F-16	985+00.5600	0.0000	5908.0630	2178440.4239	628091.8059		702.0363
F-17	985+05.4600	0.0000	5908.0904	2178436.2667	628089.2120		706.9363
F-18	985+10.3600	0.0000	5908.1177	2178432.1252	628086.5932		711.8363
F-19	985+15.2600	0.0000	5908.1451	2178427.9995	628083.9498		716.7363
CL PIER 2	985+20.1600	0.0000	5908.1724	2178423.8896	628081.2816	143364.1591	721.6363
F-1	985+26.7600	0.0000	5908.2093	2178418.3792	628077.6490		728.2363
F-2	985+33.3600	0.0000	5908.2461	2178412.8984	628073.9721		734.8363
F-3	985+39.9600	0.0000	5908.2829	2178407.4473	628070.2511		741.4363
F-4	985+46.5600	0.0000	5908.3197	2178402.0264	628066.4863		748.0363
F-5	985+53.1600	0.0000	5908.3566	2178396.6361	628062.6779		754.6363
F-6	985+59.7600	0.0000	5908.3934	2178391.2767	628058.8261		761.2363
F-7	985+66.3600	0.0000	5908.4302	2178385.9484	628054.9313		767.8363
F-8	985+72.9600	0.0000	5908.4671	2178380.6518	628050.9936		774.4363
F-9	985+79.5600	0.0000	5908.5039	2178375.3871	628047.0133		781.0363
F-10	985+86.1600	0.0000	5908.5407	2178370.1546	628042.9907		787.6363
F-11	985+92.7600	0.0000	5908.5776	2178364.9548	628038.9261		794.2363
F-12	985+99.3600	0.0000	5908.6144	2178359.7879	628034.8196		800.8363
F-13	986+05.9600	0.0000	5908.6512	2178354.6542	628030.6717		807.4363
F-14	986+12.5600	0.0000	5908.6881	2178349.5542	628026.4825		814.0363
F-15	986+19.1600	0.0000	5908.7249	2178344.4882	628022.2522		820.6363
F-16	986+25.7600	0.0000	5908.7617	2178339.4564	628017.9813		827.2363
F-17	986+32.3600	0.0000	5908.7986	2178334.4592	628013.6699		833.8363
F-18	986+38.9600	0.0000	5908.8354	2178329.4969	628009.3184		840.4363
F-19	986+45.5600	0.0000	5908.8722	2178324.5699	628004.9270		847.0363
CL PIER 3	986+52.1600	0.0000	5908.9090	2178319.6784	628000.4961	116142.0750	853.6363
F-1	986+59.0645	0.0000	5908.9476	2178314.5997	627995.8186		860.5408
F-2	986+65.9690	0.0000	5908.9861	2178309.5607	627991.0985		867.4453
F-3	986+72.8735	0.0000	5909.0246	2178304.5616	627986.3360		874.3498
F-4	986+79.7780	0.0000	5909.0632	2178299.6029	627981.5316		881.2543
F-5	986+86.6825	0.0000	5909.1017	2178294.6848	627976.6854		888.1588
F-6	986+93.5870	0.0000	5909.1402	2178289.8079	627971.7980		895.0633
F-7	987+00.4915	0.0000	5909.1788	2178284.9723	627966.8696		901.9678
F-8	987+07.3960	0.0000	5909.2173	2178280.1785	627961.9006		908.8723
F-9	987+14.3005	0.0000	5909.2558	2178275.4268	627956.8913		915.7768
F-10	987+21.2050	0.0000	5909.2944	2178270.7174	627951.8421		922.6813
F-11	987+28.1095	0.0000	5909.3329	2178266.0509	627946.7534		929.5858
F-12	987+35.0140	0.0000	5909.3714	2178261.4274	627941.6255		936.4903
F-13	987+41.9185	0.0000	5909.4099	2178256.8474	627936.4588		943.3948
F-14	987+48.8230	0.0000	5909.4485	2178252.3111	627931.2536		950.2993
F-15	987+55.7275	0.0000	5909.4870	2178247.8189	627926.0103		957.2038
F-16	987+62.6320	0.0000	5909.5255	2178243.3710	627920.7294		964.1083
F-17	987+69.5365	0.0000	5909.5641	2178238.9679	627915.4111		971.0128
F-18	987+76.4410	0.0000	5909.6026	2178234.6098	627910.0558		977.9173
F-19	987+83.3455	0.0000	5909.6411	2178230.2970	627904.6640		984.8218
CL PIER 4	987+90.2500	0.0000	5909.6797	2178226.0299	627899.2360	573649.5309	991.7263
F-1	987+97.6455	0.0000	5909.7209	2178221.5102	627893.3823		999.1218
F-2	988+05.0410	0.0000	5909.7622	2178217.0437	627887.4880		1006.5173
F-3	988+12.4365	0.0000	5909.8035	2178212.6305	627881.5535		1013.9128
F-4	988+19.8320	0.0000	5909.8447	2178208.2712	627875.5795		1021.3083
F-5	988+27.2275	0.0000	5909.8860	2178203.9660	627869.5663		1028.7038
F-6	988+34.6230	0.0000	5909.9273	2178199.7154	627863.5144		1036.0993
F-7	988+42.0185	0.0000	5909.9685	2178195.5196	627857.4244		1043.4948
F-8	988+49.4140	0.0000	5910.0098	2178191.3789	627851.2968		1050.8903
F-9	988+56.8095	0.0000	5910.0511	2178187.2939	627845.1319		1058.2858
F-10	988+64.2050	0.0000	5910.0924	2178183.2646	627838.9304		1065.6813
F-11	988+71.6005	0.0000	5910.1336	2178179.2916	627832.6928		1073.0768
F-12	988+78.9960	0.0000	5910.1749	2178175.3751	627826.4195		1080.4723
F-13	988+86.3915	0.0000	5910.2162	2178171.5155	627820.1111		1087.8678
F-14	988+93.7870	0.0000	5910.2574	2178167.7130	627813.7681		1095.2633
F-15	989+01.1825	0.0000	5910.2987	2178163.9679	627807.3910		1102.6588
F-16	989+08.5780	0.0000	5910.3400	2178160.2807	627800.9803		1110.0543
F-17	989+15.9735	0.0000	5910.3813	2178156.6515	627794.5365		1117.4498
F-18	989+23.3690	0.0000	5910.4225	2178153.0806	627788.0602		1124.8453
F-19	989+30.7645	0.0000	5910.4638	2178149.5685	627781.5519		1132.2408
CL PIER 5	989+38.1600	0.0000	5910.5051	2178146.1152	627775.0122	88162.1106	1139.6363
F-1	989+43.9100	0.0000	5910.5372	2178143.4713	627769.9061		1145.3863
F-2	989+49.6600	0.0000	5910.5692	2178140.8633	627764.7816		1151.1363
F-3	989+55.4100	0.0000	5910.6013	2178138.2913	627759.6389		1156.8863
F-4	989+61.1600	0.0000	5910.6334	2178135.7555	627754.4783		1162.6363
F-5	989+66.9100	0.0000	5910.6655	2178133.2561	627749.3000		1168.3863
F-6	989+72.6600	0.0000	5910.6976	2178130.7930	627744.1042		1174.1363
F-7	989+78.4100	0.0000	5910.7297	2178128.3666	627738.8913		1179.8863
F-8	989+84.1600	0.0000	5910.7618	2178125.9768	627733.6614		1185.6363
F-9	989+89.9100	0.0000	5910.7939	2178123.6238	627728.4149		1191.3863
F-10	989+95.6600	0.0000	5910.8259	2178121.3077	627723.1520		1197.1363
F-11	990+01.4100	0.0000	5910.8580	2178119.0287	627717.8730		1202.8863
F-12	990+07.1600	0.0000	5910.8901	2178116.7868	627712.5780		1208.6363
F-13	990+12.9100	0.0000	5910.9222	2178114.5822	627707.2675		1214.3863
F-14	990+18.6600	0.0000	5910.9543	2178112.4149	627701.9416		1220.1363
F-15	990+24.4100	0.0000	5910.9864	2178110.2850	627696.6006		1225.8863
F-16	990+30.1600	0.0000	5911.0185	2178108.1928	627691.2448		1231.6363
F-17	990+35.9100	0.0000	5911.0506	2178106.1382	627685.8744		1237.3863
F-18	990+41.6600	0.0000	5911.0826	2178104.1214	627680.4897		1243.1363
F-19	990+47.4100	0.0000	5911.1147	2178102.1425	627675.0909		1248.8863
CL ABUT 6	990+53.1600	0.0000	5911.1468	2178100.2016	627669.6785	82866.2287	1254.6363
BF ABUT 6	990+56.6600	0.0000	5911.1664	2178099.0388	627666.3773	82864.9950	1258.1363

LONGITUDINAL LINE: WEB W.P. 4

BENT LINE DESCRIPTION OR FRACTIONAL POINT DESIGNATION	STATION	OFFSET	ELEVATION	EAST	NORTH	BENT LINE LENGTH FROM N-GRID or OFFSET FROM EXTERIOR GIRDER	GIRDER LINE LENGTH
BF ABUT 1	984+18.6843	5.7139	5907.9753	2178509.5455	628136.5234	177173.9117	624.4898
CL ABUT 1	984+22.1600	5.7139	5908.0045	2178506.4046	628134.9792	177166.8235	627.9898
F-1	984+27.0600	5.7139	5908.0447	2178501.9878	628132.7795		632.9240
F-2	984+31.9600	5.7139	5908.0836	2178497.5843	628130.5534		637.8582
F-3	984+36.8600	5.7139	5908.1212	2178493.1942	628128.3010		642.7924
F-4	984+41.7600	5.7139	5908.1577	2178488.8177	628126.0224		647.7266
F-5	984+46.6600	5.7139	5908.1928	2178484.4548	628123.7176		652.6608
F-6	984+51.5600	5.7139	5908.2267	2178480.1059	628121.3867		657.5950
F-7	984+56.4600	5.7139	5908.2594	2178475.7710	628119.0298		662.5293
F-8	984+61.3600	5.7139	5908.2909	2178471.4502	628116.6470		667.4635
F-9	984+66.2600	5.7139	5908.3211	2178467.1439	628114.2384		672.3977

NOTE: ELEVATIONS ARE AT TOP OF CONCRETE DECK 0.1667 FEET BELOW FINISHED GRADE.

E-470
Engineer 470 Partnership

DIVISION OF HIGHWAYS

I-25/470 INTERCHANGE
RAMP E FLYOVER
BRIDGE DECK ELEVATIONS

Designer	J. Stapleton	Structure Numbers	F-17-JW
Detailer	D. Kurschinski		

Drawing Number B-43 of 45 Drawings

Revision Dates (Preliminary Stage Only)

INITIAL | DATE | CHECKED BY | QUANTITIES BY | CHECKED BY | DESIGNED BY | CHECKED BY | DETAILED BY

30-MAR-1990 18:23
DGN$SPEC

UDA2:[200,32]SEBDE0114.90X

STATE OF COLORADO
STATE DEPARTMENT OF HIGHWAYS
DIVISION OF HIGHWAYS:
D. O. H. FORM NO. 126:
REV. FEB. 1984

BRIDGE DECK ELEVATIONS

	REVISIONS	
A-1 4-2-90	Revise Geometry	J.L.S.

AS CONSTRUCTED
NO REVISIONS ☐ REVISED ☐ VOID ☐

FED. ROAD REGION	DIVISION	PROJ. NO.	SHEET NO.	SHEET TOTALS
VIII	COLORADO	IA06	154	

42

BENT LINE DESCRIPTION OR FRACTIONAL POINT DESIGNATION	STATION	OFFSET	ELEVATION	COORDINATES FROM LAYOUT LINE: EAST	NORTH	BENT LINE LENGTH FROM N-GRID or OFFSET FROM EXTERIOR GIRDER	GIRDER LINE LENGTH
F-10	984+71.1600	5.7139	5908.3500	2178462.8520	628111.8041		677.3319
F-11	984+76.0600	5.7139	5908.3777	2178458.5747	628109.3441		682.2661
F-12	984+80.9600	5.7139	5908.4051	2178454.3123	628106.8586		687.2003
F-13	984+85.8600	5.7139	5908.4324	2178450.0648	628104.3475		692.1345
F.S. 1	984+90.5558	5.7139	5908.4586	2178446.0085	628101.9173	151910.1199	696.8631
F-14	984+90.7600	5.7139	5908.4598	2178445.8324	628101.8111		697.0687
F-15	984+95.6600	5.7139	5908.4871	2178441.6153	628099.2494		702.0029
F-16	985+00.5600	5.7139	5908.5144	2178437.4136	628096.6625		706.9371
F-17	985+05.4600	5.7139	5908.5418	2178433.2275	628094.0505		711.8713
F-18	985+10.3600	5.7139	5908.5691	2178429.0571	628091.4135		716.8055
F-19	985+15.2600	5.7139	5908.5965	2178424.9025	628088.7516		721.7397
CL PIER 2	985+20.1600	5.7139	5908.6238	2178420.7639	628086.0648	143358.4452	726.6739
F-1	985+26.7600	5.7139	5908.6607	2178415.2151	628082.4069		733.3200
F-2	985+33.3600	5.7139	5908.6975	2178409.6960	628078.7043		739.9661
F-3	985+39.9600	5.7139	5908.7343	2178404.2069	628074.9573		746.6122
F-4	985+46.5600	5.7139	5908.7711	2178398.7482	628071.1662		753.2582
F.S. 2	985+49.7642	5.7139	5908.7890	2178396.1091	628069.3098	135882.9537	756.4848
F-5	985+53.1600	5.7139	5908.8080	2178393.3202	628067.3312		759.9043
F-6	985+59.7600	5.7139	5908.8448	2178387.9233	628063.4525		766.5504
F-7	985+66.3600	5.7139	5908.8816	2178382.5579	628059.5305		773.1964
F-8	985+72.9600	5.7139	5908.9185	2178377.2243	628055.5653		779.8425
F-9	985+79.5600	5.7139	5908.9553	2178371.9228	628051.5573		786.4886
F-10	985+86.1600	5.7139	5908.9921	2178366.6538	628047.5066		793.1347
F-11	985+92.7600	5.7139	5909.0290	2178361.4177	628043.4136		799.7807
F-12	985+99.3600	5.7139	5909.0658	2178356.2147	628039.2785		806.4268
F-13	986+05.9600	5.7139	5909.1026	2178351.0453	628035.1016		813.0729
F-14	986+12.5600	5.7139	5909.1395	2178345.9096	628030.8831		819.7190
F.S. 3	986+16.4308	5.7139	5909.1611	2178342.9136	628028.3898	122128.6492	823.6168
F-15	986+19.1600	5.7139	5909.1763	2178340.8082	628026.6234		826.3650
F-16	986+25.7600	5.7139	5909.2131	2178335.7413	628022.3226		833.0111
F-17	986+32.3600	5.7139	5909.2500	2178330.7092	628017.9812		839.6572
F-18	986+38.9600	5.7139	5909.2868	2178325.7123	628013.5993		846.3033
F-19	986+45.5600	5.7139	5909.3236	2178320.7509	628009.1772		852.9493
CL PIER 3	986+52.1600	5.7139	5909.3604	2178315.8253	628004.7153	116136.3611	859.5954
F-1	986+58.7892	5.7139	5909.3974	2178310.9143	628000.1938		866.2709
F-2	986+65.4184	5.7139	5909.4344	2178306.0401	627995.6327		872.9463
F-3	986+72.0476	5.7139	5909.4714	2178301.2030	627991.0323		879.6218
F-4	986+78.6768	5.7139	5909.5084	2178296.4033	627986.3929		886.2973
F-5	986+85.3060	5.7139	5909.5454	2178291.6413	627981.7147		892.9727
F.S. 4	986+85.9256	5.7139	5909.5489	2178291.1981	627981.2755	111173.8860	893.5967
F-6	986+91.9351	5.7139	5909.5824	2178286.9174	627976.9981		899.6482
F-7	986+98.5643	5.7139	5909.6194	2178282.2318	627972.2434		906.3237
F-8	987+05.1935	5.7139	5909.6564	2178277.5849	627967.4509		912.9992
F-9	987+11.8227	5.7139	5909.6934	2178272.9769	627962.6210		919.6746
F-10	987+18.4519	5.7139	5909.7304	2178268.4083	627957.7539		926.3501
F-11	987+25.0811	5.7139	5909.7674	2178263.8792	627952.8499		933.0256
F-12	987+31.7103	5.7139	5909.8044	2178259.3899	627947.9094		939.7010
F-13	987+38.3395	5.7139	5909.8414	2178254.9408	627942.9327		946.3765
F-14	987+44.9687	5.7139	5909.8784	2178250.5322	627937.9202		953.0520
F-15	987+51.5979	5.7139	5909.9154	2178246.1643	627932.8721		959.7274
F.S. 5	987+55.2590	5.7139	5909.9358	2178243.7696	627930.0691	102713.6485	963.4141
F-16	987+58.2271	5.7139	5909.9523	2178241.8375	627927.7888		966.4029
F-17	987+64.8563	5.7139	5909.9893	2178237.5519	627922.6706		973.0784
F-18	987+71.4854	5.7139	5910.0263	2178233.3080	627917.5179		979.7538
F-19	987+78.1146	5.7139	5910.0633	2178229.1059	627912.3310		986.4293
CL PIER 4	987+84.7438	5.7139	5910.1003	2178224.9460	627907.1102	573641.5825	993.1048
F-1	987+92.4146	5.7139	5910.1431	2178220.1853	627901.0273		1000.8291
F-2	988+00.0854	5.7139	5910.1859	2178215.4820	627894.9000		1008.5535
F-3	988+07.7563	5.7139	5910.2287	2178210.8362	627888.7290		1016.2779
F-4	988+15.4271	5.7139	5910.2716	2178206.2485	627882.5146		1024.0022
F-5	988+23.0979	5.7139	5910.3144	2178201.7192	627876.2576		1031.7266
F.S. 7	988+23.6183	5.7139	5910.3173	2178201.4140	627875.8315	96170.4275	1032.2506
F-6	988+30.7687	5.7139	5910.3572	2178197.2487	627869.9583		1039.4509
F-7	988+38.4395	5.7139	5910.4000	2178192.8375	627863.6175		1047.1753
F-8	988+46.1103	5.7139	5910.4428	2178188.4859	627857.2356		1054.8996
F-9	988+53.7811	5.7139	5910.4856	2178184.1943	627850.8132		1062.6240
F-10	988+61.4519	5.7139	5910.5284	2178179.9630	627844.3508		1070.3484
F-11	988+69.1227	5.7139	5910.5712	2178175.7926	627837.8491		1078.0727
F-12	988+76.7935	5.7139	5910.6140	2178171.6832	627831.3086		1085.7971
F-13	988+84.4643	5.7139	5910.6568	2178167.6353	627824.7299		1093.5214
F-14	988+92.1351	5.7139	5910.6996	2178163.6492	627818.1135		1101.2458
F-15	988+99.8060	5.7139	5910.7424	2178159.7253	627811.4600		1108.9701
F.S. 9	989+04.4725	5.7139	5910.7685	2178157.3688	627807.3945	90189.2673	1113.6693
F-16	989+07.4768	5.7139	5910.7852	2178155.8640	627804.7701		1116.6945
F-17	989+15.1476	5.7139	5910.8280	2178152.0655	627798.0443		1124.4189
F-18	989+22.8184	5.7139	5910.8708	2178148.3302	627791.2831		1132.1432
F-19	989+30.4892	5.7139	5910.9137	2178144.6584	627784.4873		1139.8676
CL PIER 5	989+38.1600	5.7139	5910.9565	2178141.0505	627777.6574	88156.3967	1147.5919
F-1	989+43.9100	5.7139	5910.9886	2178138.3881	627772.5157		1153.3821
F-2	989+49.6600	5.7139	5911.0206	2178135.7618	627767.3554		1159.1722
F-3	989+55.4100	5.7139	5911.0527	2178133.1719	627762.1768		1164.9623
F-4	989+61.1600	5.7139	5911.0848	2178130.6184	627756.9801		1170.7525
F-5	989+66.9100	5.7139	5911.1169	2178128.1015	627751.7656		1176.5426
F-6	989+72.6600	5.7139	5911.1490	2178125.6213	627746.5336		1182.3328
F.S. 10	989+74.9100	5.7139	5911.1615	2178124.6608	627744.4816	86204.0380	1184.5985
F-7	989+78.4100	5.7139	5911.1811	2178123.1779	627741.2843		1188.1229
F-8	989+84.1600	5.7139	5911.2132	2178120.7715	627736.0179		1193.9130
F-9	989+89.9100	5.7139	5911.2453	2178118.4020	627730.7348		1199.7032
F-10	989+95.6600	5.7139	5911.2773	2178116.0698	627725.4352		1205.4933
F-11	990+01.4100	5.7139	5911.3094	2178113.7749	627720.1193		1211.2835
F-12	990+07.1600	5.7139	5911.3415	2178111.5173	627714.7874		1217.0736
F-13	990+12.9100	5.7139	5911.3736	2178109.2973	627709.4397		1222.8637
F-14	990+18.6600	5.7139	5911.4057	2178107.1149	627704.0767		1228.6539
F-15	990+24.4100	5.7139	5911.4378	2178104.9702	627698.6984		1234.4440
F-16	990+30.1600	5.7139	5911.4699	2178102.8633	627693.3052		1240.2342
F-17	990+35.9100	5.7139	5911.5020	2178100.7944	627687.8973		1246.0243
F-18	990+41.6600	5.7139	5911.5340	2178098.7635	627682.4750		1251.8144
F-19	990+47.4100	5.7139	5911.5661	2178096.7708	627677.0386		1257.6046
CL ABUT 6	990+53.1600	5.7139	5911.5982	2178094.8163	627671.5883	82860.5148	1263.3947
BF ABUT 6	990+56.6357	5.7139	5911.6176	2178093.6534	627668.2871	82859.2810	1266.8947

LONGITUDINAL LINE: RT. BARRIER FACE

BENT LINE DESCRIPTION OR FRACTIONAL POINT DESIGNATION	STATION	OFFSET	ELEVATION	COORDINATES FROM LAYOUT LINE: EAST	NORTH	BENT LINE LENGTH FROM N-GRID or OFFSET FROM EXTERIOR GIRDER	GIRDER LINE LENGTH
BF ABUT 1	984+18.6939	8.0000	5908.1560	2178508.5324	628138.5728	177171.6255	626.2316
CL ABUT 1	984+22.1600	8.0000	5908.1851	2178505.3915	628137.0286	177164.5374	629.7316
F-1	984+27.0600	8.0000	5908.2253	2178500.9625	628134.8228		634.6795
F-2	984+31.9600	8.0000	5908.2642	2178496.5468	628132.5905		639.6274
F-3	984+36.8600	8.0000	5908.3018	2178492.1445	628130.3319		644.5753
F-4	984+41.7600	8.0000	5908.3383	2178487.7559	628128.0469		649.5232
F-5	984+46.6600	8.0000	5908.3734	2178483.3809	628125.7357		654.4711
F-6	984+51.5600	8.0000	5908.4074	2178479.0199	628123.3984		659.4190
F-7	984+56.4600	8.0000	5908.4400	2178474.6730	628121.0350		664.3669
F-8	984+61.3600	8.0000	5908.4715	2178470.3403	628118.6456		669.3148
F-9	984+66.2600	8.0000	5908.5017	2178466.0219	628116.2303		674.2627
F-10	984+71.1600	8.0000	5908.5306	2178461.7182	628113.7892		679.2105
F-11	984+76.0600	8.0000	5908.5583	2178457.4291	628111.3224		684.1584
F-12	984+80.9600	8.0000	5908.5857	2178453.1548	628108.8300		689.1063
F-13	984+85.8600	8.0000	5908.6130	2178448.8955	628106.3120		694.0542
F-14	984+90.7600	8.0000	5908.6404	2178444.6514	628103.7685		699.0021
F-15	984+95.6600	8.0000	5908.6677	2178440.4226	628101.1997		703.9500
F-16	985+00.5600	8.0000	5908.6950	2178436.2093	628098.6057		708.8979
F-17	985+05.4600	8.0000	5908.7224	2178432.0115	628095.9864		713.8458
F-18	985+10.3600	8.0000	5908.7497	2178427.8295	628093.3421		718.7937
F-19	985+15.2600	8.0000	5908.7771	2178423.6634	628090.6728		723.7416
CL PIER 2	985+20.1600	8.0000	5908.8044	2178419.5134	628087.9785	143356.1591	728.6895
F-1	985+26.7600	8.0000	5908.8413	2178413.9492	628084.3104		735.3540
F-2	985+33.3600	8.0000	5908.8781	2178408.4147	628080.5976		742.0185
F-3	985+39.9600	8.0000	5908.9149	2178402.9104	628076.8402		748.6830
F-4	985+46.5600	8.0000	5908.9517	2178397.4366	628073.0386		755.3475
F-5	985+53.1600	8.0000	5908.9886	2178391.9935	628069.1930		762.0120
F-6	985+59.7600	8.0000	5909.0254	2178386.5817	628065.3036		768.6765
F-7	985+66.3600	8.0000	5909.0622	2178381.2014	628061.3706		775.3410
F-8	985+72.9600	8.0000	5909.0991	2178375.8530	628057.3945		782.0055
F-9	985+79.5600	8.0000	5909.1359	2178370.5368	628053.3753		788.6700
F-10	985+86.1600	8.0000	5909.1727	2178365.2532	628049.3134		795.3345
F-11	985+92.7600	8.0000	5909.2096	2178360.0025	628045.2090		801.9990
F-12	985+99.3600	8.0000	5909.2464	2178354.7851	628041.0625		808.6635
F-13	986+05.9600	8.0000	5909.2832	2178349.6013	628036.8740		815.3281
F-14	986+12.5600	8.0000	5909.3201	2178344.4515	628032.6438		821.9926
F-15	986+19.1600	8.0000	5909.3569	2178339.3359	628028.3722		828.6571
F-16	986+25.7600	8.0000	5909.3937	2178334.2549	628024.0595		835.3216
F-17	986+32.3600	8.0000	5909.4306	2178329.2089	628019.7060		841.9861
F-18	986+38.9600	8.0000	5909.4674	2178324.1981	628015.3120		848.6506
F-19	986+45.5600	8.0000	5909.5042	2178319.2229	628010.8777		855.3151
CL PIER 3	986+52.1600	8.0000	5909.5410	2178314.2837	628006.4034	116134.0750	861.9796
F-1	986+58.6806	8.0000	5909.5774	2178309.4394	628001.9440		868.5639
F-2	986+65.2012	8.0000	5909.6138	2178304.6309	627997.4461		875.1483
F-3	986+71.7218	8.0000	5909.6502	2178299.8583	627992.9101		881.7326
F-4	986+78.2424	8.0000	5909.6866	2178295.1220	627988.3362		888.3169
F-5	986+84.7630	8.0000	5909.7230	2178290.4223	627983.7247		894.9013
F-6	986+91.2836	8.0000	5909.7594	2178285.7595	627979.0759		901.4856
F-7	986+97.8042	8.0000	5909.7958	2178281.1338	627974.3901		908.0699
F-8	987+04.3248	8.0000	5909.8322	2178276.5456	627969.6676		914.6543
F-9	987+10.8454	8.0000	5909.8685	2178271.9952	627964.9087		921.2386
F-10	987+17.3660	8.0000	5909.9049	2178267.4829	627960.1137		927.8229
F-11	987+23.8866	8.0000	5909.9413	2178263.0089	627955.2830		934.4072
F-12	987+30.4072	8.0000	5909.9777	2178258.5735	627950.4167		940.9916
F-13	987+36.9278	8.0000	5910.0141	2178254.1770	627945.5152		947.5759
F-14	987+43.4484	8.0000	5910.0505	2178249.8197	627940.5789		954.1602
F-15	987+49.9690	8.0000	5910.0869	2178245.5019	627935.6080		960.7446
F-16	987+56.4896	8.0000	5910.1233	2178241.2238	627930.6029		967.3289
F-17	987+63.0102	8.0000	5910.1596	2178236.9858	627925.5639		973.9132
F-18	987+69.5308	8.0000	5910.1960	2178232.7880	627920.4913		980.4976
F-19	987+76.0514	8.0000	5910.2324	2178228.6307	627915.3853		987.0819
CL PIER 4	987+82.5720	8.0000	5910.2688	2178224.5142	627910.2465	573638.4167	993.6662
F-1	987+90.3514	8.0000	5910.3122	2178219.6569	627904.0729		1001.5217
F-2	987+98.1308	8.0000	5910.3556	2178214.8584	627897.8534		1009.3771
F-3	988+05.9102	8.0000	5910.3990	2178210.1192	627891.5886		1017.2325
F-4	988+13.6896	8.0000	5910.4425	2178205.4398	627885.2790		1025.0880
F-5	988+21.4690	8.0000	5910.4859	2178200.8206	627878.9253		1032.9434
F-6	988+29.2484	8.0000	5910.5293	2178196.2620	627872.5279		1040.7988
F-7	988+37.0278	8.0000	5910.5727	2178191.7643	627866.0875		1048.6543
F-8	988+44.8072	8.0000	5910.6161	2178187.3281	627859.6047		1056.5097
F-9	988+52.5866	8.0000	5910.6595	2178182.9537	627853.0799		1064.3651
F-10	988+60.3660	8.0000	5910.7029	2178178.6415	627846.5139		1072.2206
F-11	988+68.1454	8.0000	5910.7463	2178174.3920	627839.9072		1080.0760
F-12	988+75.9248	8.0000	5910.7898	2178170.2054	627833.2604		1087.9314
F-13	988+83.7042	8.0000	5910.8332	2178166.0821	627826.5742		1095.7869
F-14	988+91.4836	8.0000	5910.8766	2178162.0226	627819.8490		1103.6423
F-15	988+99.2630	8.0000	5910.9200	2178158.0272	627813.0856		1111.4978
F-16	989+07.0424	8.0000	5910.9634	2178154.0963	627806.2844		1119.3532
F-17	989+14.8218	8.0000	5911.0068	2178150.2301	627799.4463		1127.2086
F-18	989+22.6012	8.0000	5911.0502	2178146.4292	627792.5717		1135.0641
F-19	989+30.3806	8.0000	5911.0937	2178142.6937	627785.6613		1142.9195
CL PIER 5	989+38.1600	8.0000	5911.1371	2178139.0241	627778.7157	88154.1106	1150.7749
F-1	989+43.9100	8.0000	5911.1692	2178136.3543	627773.5597		1156.5811
F-2	989+49.6600	8.0000	5911.2012	2178133.7208	627768.3851		1162.3873
F-3	989+55.4100	8.0000	5911.2333	2178131.1237	627763.1922		1168.1935
F-4	989+61.1600	8.0000	5911.2654	2178128.5631	627757.9811		1173.9997
F-5	989+66.9100	8.0000	5911.2975	2178126.0392	627752.7521		1179.8059
F-6	989+72.6600	8.0000	5911.3296	2178123.5521	627747.5056		1185.6121
F-7	989+78.4100	8.0000	5911.3617	2178121.1020	627742.2417		1191.4183
F-8	989+84.1600	8.0000	5911.3938	2178118.6888	627736.9608		1197.2245
F-9	989+89.9100	8.0000	5911.4259	2178116.3129	627731.6630		1203.0307
F-10	989+95.6600	8.0000	5911.4579	2178113.9741	627726.3486		1208.8369
F-11	990+01.4100	8.0000	5911.4900	2178111.6728	627721.0180		1214.6431
F-12	990+07.1600	8.0000	5911.5221	2178109.4090	627715.6713		1220.4493
F-13	990+12.9100	8.0000	5911.5542	2178107.1828	627710.3089		1226.2555
F-14	990+18.6600	8.0000	5911.5863	2178104.9944	627704.9309		1232.0617
F-15	990+24.4100	8.0000	5911.6184	2178102.8437	627699.5377		1237.8679
F-16	990+30.1600	8.0000	5911.6505	2178100.7310	627694.1295		1243.6741
F-17	990+35.9100	8.0000	5911.6826	2178098.6564	627688.7066		1249.4803
F-18	990+41.6600	8.0000	5911.7146	2178096.6199	627683.2693		1255.2865
F-19	990+47.4100	8.0000	5911.7467	2178094.6216	627677.8178		1261.0927
CL ABUT 6	990+53.1600	8.0000	5911.7788	2178092.6617	627672.3524	82858.2287	1266.8989
BF ABUT 6	990+56.6261	8.0000	5911.7982	2178091.4988	627669.0513	82856.9949	1270.3989

LONGITUDINAL LINE: RT. DECK EDGE

BENT LINE DESCRIPTION OR FRACTIONAL POINT DESIGNATION	STATION	OFFSET	ELEVATION	COORDINATES FROM LAYOUT LINE: EAST	NORTH	BENT LINE LENGTH FROM N-GRID or OFFSET FROM EXTERIOR GIRDER	GIRDER LINE LENGTH
BF ABUT 1	984+18.7012	9.7500	5908.2943	2178507.7570	628140.1417	177169.8755	627.5650
CL ABUT 1	984+22.1600	9.7500	5908.3234	2178504.6161	628138.5974	177162.7874	631.0650
F-1	984+27.0600	9.7500	5908.3635	2178500.1777	628136.3869		636.0233
F-2	984+31.9600	9.7500	5908.4024	2178495.7526	628134.1499		640.9817
F-3	984+36.8600	9.7500	5908.4401	2178491.3410	628131.8865		645.9401
F-4	984+41.7600	9.7500	5908.4765	2178486.9430	628129.5967		650.8984
F-5	984+46.6600	9.7500	5908.5117	2178482.5589	628127.2806		655.8568
F-6	984+51.5600	9.7500	5908.5456	2178478.1886	628124.9383		660.8152
F-7	984+56.4600	9.7500	5908.5783	2178473.8325	628122.5699		665.7736
F-8	984+61.3600	9.7500	5908.6097	2178469.4906	628120.1755		670.7319
F-9	984+66.2600	9.7500	5908.6399	2178465.1631	628117.7551		675.6903
F-10	984+71.1600	9.7500	5908.6688	2178460.8502	628115.3088		680.6487
F-11	984+76.0600	9.7500	5908.6966	2178456.5520	628112.8368		685.6070
F-12	984+80.9600	9.7500	5908.7239	2178452.2687	628110.3391		690.5654
F-13	984+85.8600	9.7500	5908.7513	2178448.0004	628107.8157		695.5238
F-14	984+90.7600	9.7500	5908.7786	2178443.7474	628105.2669		700.4821
F-15	984+95.6600	9.7500	5908.8059	2178439.5096	628102.6927		705.4405
F-16	985+00.5600	9.7500	5908.8333	2178435.2873	628100.0931		710.3989
F-17	985+05.4600	9.7500	5908.8606	2178431.0807	628097.4683		715.3572
F-18	985+10.3600	9.7500	5908.8880	2178426.8898	628094.8184		720.3156
F-19	985+15.2600	9.7500	5908.9153	2178422.7149	628092.1434		725.2740
CL PIER 2	985+20.1600	9.7500	5908.9427	2178418.5561	628089.4435	143354.4091	730.2323
F-1	985+26.7600	9.7500	5908.9795	2178412.9801	628085.7676		736.9110
F-2	985+33.3600	9.7500	5909.0163	2178407.4339	628082.0469		743.5896
F-3	985+39.9600	9.7500	5909.0532	2178401.9180	628078.2816		750.2682
F-4	985+46.5600	9.7500	5909.0900	2178396.4325	628074.4719		756.9468
F-5	985+53.1600	9.7500	5909.1268	2178390.9780	628070.6181		763.6254
F-6	985+59.7600	9.7500	5909.1637	2178385.5547	628066.7205		770.3040
F-7	985+66.3600	9.7500	5909.2005	2178380.1630	628062.7793		776.9827
F-8	985+72.9600	9.7500	5909.2373	2178374.8032	628058.7947		783.6613
F-9	985+79.5600	9.7500	5909.2742	2178369.4758	628054.7670		790.3399
F-10	985+86.1600	9.7500	5909.3110	2178364.1810	628050.6965		797.0185
F-11	985+92.7600	9.7500	5909.3478	2178358.9192	628046.5834		803.6971
F-12	985+99.3600	9.7500	5909.3846	2178353.6908	628042.4281		810.3758
F-13	986+05.9600	9.7500	5909.4215	2178348.4960	628038.2307		817.0544
F-14	986+12.5600	9.7500	5909.4583	2178343.3352	628033.9916		823.7330
F-15	986+19.1600	9.7500	5909.4951	2178338.2088	628029.7110		830.4116
F-16	986+25.7600	9.7500	5909.5320	2178333.1171	628025.3892		837.0902
F-17	986+32.3600	9.7500	5909.5688	2178328.0604	628021.0264		843.7689
F-18	986+38.9600	9.7500	5909.6056	2178323.0390	628016.6231		850.4475
F-19	986+45.5600	9.7500	5909.6425	2178318.0533	628012.1794		857.1261
CL PIER 3	986+52.1600	9.7500	5909.6793	2178313.1036	628007.6956	116132.3250	863.8047
F-1	986+58.5981	9.7500	5909.7152	2178308.3103	628003.2836		870.3195
F-2	986+65.0361	9.7500	5909.7512	2178303.5519	627998.8340		876.8342
F-3	986+71.4742	9.7500	5909.7871	2178298.8286	627994.3471		883.3490
F-4	986+77.9123	9.7500	5909.8230	2178294.1407	627989.8231		889.8637
F-5	986+84.3503	9.7500	5909.8589	2178289.4886	627985.2625		896.3785
F-6	986+90.7884	9.7500	5909.8949	2178284.8725	627980.6654		902.8932
F-7	986+97.2264	9.7500	5909.9308	2178280.2927	627976.0321		909.4080
F-8	987+03.6645	9.7500	5909.9667	2178275.7495	627971.3630		915.9227
F-9	987+10.1026	9.7500	5910.0026	2178271.2432	627966.6582		922.4375
F-10	987+16.5406	9.7500	5910.0386	2178266.7740	627961.9182		928.9522
F-11	987+22.9787	9.7500	5910.0745	2178262.3422	627957.1431		935.4670
F-12	987+29.4168	9.7500	5910.1104	2178257.9481	627952.3334		941.9817
F-13	987+35.8548	9.7500	5910.1464	2178253.5920	627947.4892		948.4965
F-14	987+42.2929	9.7500	5910.1823	2178249.2741	627942.6109		955.0112
F-15	987+48.7309	9.7500	5910.2182	2178244.9947	627937.6988		961.5260
F-16	987+55.1690	9.7500	5910.2541	2178240.7541	627932.7532		968.0407
F-17	987+61.6071	9.7500	5910.2901	2178236.5525	627927.7744		974.5555
F-18	987+68.0451	9.7500	5910.3260	2178232.3902	627922.7627		981.0702
F-19	987+74.4832	9.7500	5910.3619	2178228.2675	627917.7185		987.5850
CL PIER 4	987+80.9213	9.7500	5910.3978	2178224.1845	627912.6419	573635.9986	994.0997
F-1	987+88.7832	9.7500	5910.4417	2178219.2529	627906.3993		1002.0553
F-2	987+96.6451	9.7500	5910.4856	2178214.3815	627900.1096		1010.0109
F-3	988+04.5071	9.7500	5910.5295	2178209.5707	627893.7734		1017.9665
F-4	988+12.3690	9.7500	5910.5733	2178204.8210	627887.3913		1025.9221
F-5	988+20.2309	9.7500	5910.6172	2178200.1329	627880.9638		1033.8777
F-6	988+28.0929	9.7500	5910.6611	2178195.5067	627874.4917		1041.8333
F-7	988+35.9548	9.7500	5910.7050	2178190.9428	627867.9754		1049.7889
F-8	988+43.8168	9.7500	5910.7488	2178186.4418	627861.4155		1057.7444
F-9	988+51.6787	9.7500	5910.7927	2178182.0040	627854.8128		1065.7000
F-10	988+59.5406	9.7500	5910.8366	2178177.6298	627848.1677		1073.6556
F-11	988+67.4026	9.7500	5910.8805	2178173.3196	627841.4809		1081.6112
F-12	988+75.2645	9.7500	5910.9243	2178169.0738	627834.7530		1089.5668
F-13	988+83.1264	9.7500	5910.9682	2178164.8929	627827.9846		1097.5224
F-14	988+90.9884	9.7500	5911.0121	2178160.7772	627821.1764		1105.4780
F-15	988+98.8503	9.7500	5911.0559	2178156.7270	627814.3290		1113.4336
F-16	989+06.7123	9.7500	5911.0998	2178152.7429	627807.4430		1121.3892
F-17	989+14.5742	9.7500	5911.1437	2178148.8250	627800.5190		1129.3447
F-18	989+22.4361	9.7500	5911.1876	2178144.9738	627793.5577		1137.3003
F-19	989+30.2981	9.7500	5911.2314	2178141.1897	627786.5598		1145.2559
CL PIER 5	989+38.1600	9.7500	5911.2753	2178137.4729	627779.5258	88152.3606	1153.2115
F-1	989+43.9100	9.7500	5911.3074	2178134.7975	627774.3589		1159.0300
F-2	989+49.6600	9.7500	5911.3395	2178132.1584	627769.1734		1164.8485
F-3	989+55.4100	9.7500	5911.3716	2178129.5558	627763.9694		1170.6670
F-4	989+61.1600	9.7500	5911.4037	2178126.9898	627758.7473		1176.4855
F-5	989+66.9100	9.7500	5911.4358	2178124.4606	627753.5073		1182.3040
F-6	989+72.6600	9.7500	5911.4678	2178121.9682	627748.2497		1188.1225
F-7	989+78.4100	9.7500	5911.4999	2178119.5128	627742.9746		1193.9410
F-8	989+84.1600	9.7500	5911.5320	2178117.0946	627737.6825		1199.7594
F-9	989+89.9100	9.7500	5911.5641	2178114.7136	627732.3735		1205.5779
F-10	989+95.6600	9.7500	5911.5962	2178112.3699	627727.0479		1211.3964
F-11	990+01.4100	9.7500	5911.6283	2178110.0637	627721.7060		1217.2149
F-12	990+07.1600	9.7500	5911.6604	2178107.7951	627716.3480		1223.0334
F-13	990+12.9100	9.7500	5911.6925	2178105.5642	627710.9742		1228.8519
F-14	990+18.6600	9.7500	5911.7245	2178103.3711	627705.5848		1234.6704
F-15	990+24.4100	9.7500	5911.7566	2178101.2159	627700.1802		1240.4889
F-16	990+30.1600	9.7500	5911.7887	2178099.0988	627694.7606		1246.3074
F-17	990+35.9100	9.7500	5911.8208	2178097.0197	627689.3262		1252.1259
F-18	990+41.6600	9.7500	5911.8529	2178094.9789	627683.8774		1257.9444
F-19	990+47.4100	9.7500	5911.8850	2178092.9764	627678.4143		1263.7629
CL ABUT 6	990+53.1600	9.7500	5911.9171	2178091.0123	627672.9374	82856.4787	1269.5814
BF ABUT 6	990+56.6188	9.7500	5911.9364	2178089.8494	627669.6362	82855.2449	1273.0814

NOTE: ELEVATIONS ARE AT TOP OF CONCRETE DECK 0.1667 FEET BELOW FINISHED GRADE.

E-470
Engineer 470 Partnership

DIVISION OF HIGHWAYS
I-25/470 INTERCHANGE
RAMP E FLYOVER
BRIDGE DECK ELEVATIONS

Designer	J. Stapleton	Structure Numbers	F-17-JW
Detailer	D. Kurschinski		

Drawing Number B-44 of 45 Drawings

Revision Dates (Preliminary Stage Only)

DESIGNED BY / CHECKED BY / DETAILED BY / INITIAL / DATE / CHECKED BY / QUANTITIES BY / CHECKED BY

30-MAR-1990 18:25
DGN$SPEC:

UDA2:[200,32]SEBDE0114.90X

AS CONSTRUCTED					
NO REVISIONS		REVISED		VOID	

FEDERAL ROAD REGION NO.	DIVISION	PROJECT NUMBER	SHEET NUMBER
VIII	COLORADO	1A06/1802	155

REVISIONS		
- -		
- -		
- -		

ROADWAY APPROACHES

ELEVATIONS ARE AT FINISHED GRADE

STATION	OFFSETS -19.0000	-15.0000	0.0000	8.0000
990+50.0	5909.79	5910.11	5911.30	5911.93
+60.0	09.85	10.17	11.35	11.98
+70.0	09.91	10.22	11.41	12.04
+80.0	09.96	10.28	11.46	12.10
990+90.0	5910.02	5910.33	5911.52	5912.15
991+00.0	10.07	10.39	11.57	12.21
+10.0	10.13	10.45	11.63	12.26
+20.0	10.19	10.50	11.69	12.32
991+30.0	5910.24	5910.56	5911.74	5912.37
+40.0	10.30	10.61	11.80	12.43
+50.0	10.35	10.67	11.85	12.49
+60.0	10.41	10.72	11.91	12.54
991+70.0	5910.46	5910.78	5911.97	5912.60
+80.0	10.52	10.84	12.02	12.65
+90.0	10.58	10.89	12.08	12.71
992+00.0	10.63	10.95	12.13	12.76

STATION	OFFSETS -19.0000	-15.0000	0.0000	8.0000
982+70.0	5904.35	5904.67	5905.85	5906.49
+80.0	04.51	04.83	06.01	06.64
+90.0	04.67	04.98	06.17	06.80
983+00.0	04.82	05.13	06.32	06.95
983+10.0	5904.96	5905.28	5906.46	5907.09
+20.0	05.10	05.41	06.60	07.23
+30.0	05.23	05.55	06.73	07.36
+40.0	05.36	05.68	06.86	07.49
983+50.0	5905.48	5905.80	5906.98	5907.62
+60.0	05.60	05.92	07.10	07.73
+70.0	05.71	06.03	07.22	07.85
+80.0	05.82	06.14	07.32	07.95
983+90.0	5905.92	5906.24	5907.43	5908.06
984+00.0	06.02	06.34	07.52	08.15
+10.0	06.11	06.43	07.61	08.25
+20.0	06.20	06.52	07.70	08.33

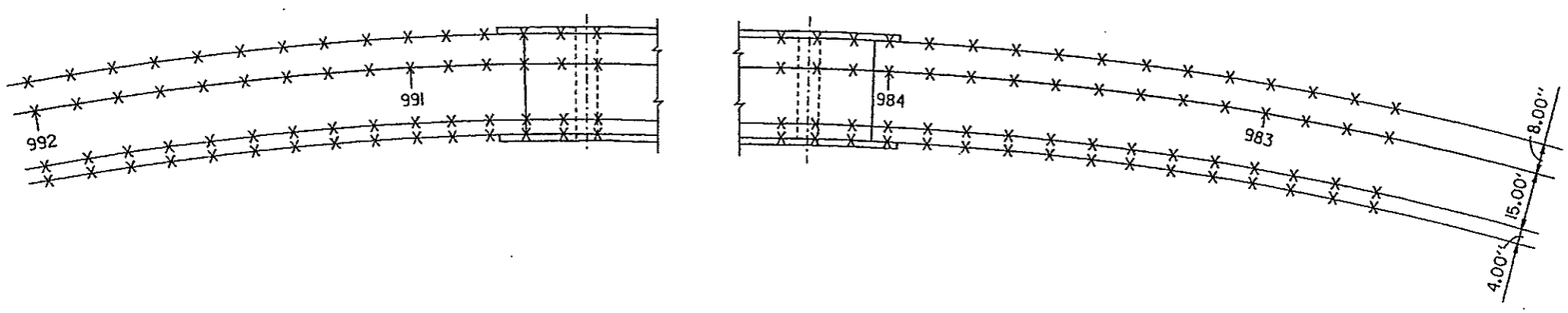

	INITIAL	DATE	
Designed By	JS	1-90	Checked By
Checked By	AEG	1-90	Quantities By
Detailed By	AEG	1-90	Checked By

$$$$DGNSPEC$$$$$$$$$$$$$$$$
USERNAME
$$$$$SYTIME$$$$$$

E-470
Engineer 470 Partnership

DIVISION OF HIGHWAYS
I-25/470 INTERCHANGE
RAMP E FLYOVER
ROADWAY APPROACHES

Designer J. STAPLETON	Structure Numbers	F - 17 - JW	
Detailer A. GRIFFITH			
Drawing Number B-45 of 45 Drawings			

J. Stapleton

ROADWAY APPROACHES

SERWY0113 90X

ITE OF COLORADO
ITE DEPARTMENT OF HIGHWAYS
ISION OF HIGHWAYS
H. FORM NO. 126
, FEB. 1984

GENERAL NOTES

ALL WORK SHALL BE DONE ACCORDING TO THE STANDARD SPECIFICATIONS OF THE DIVISION OF HIGHWAYS, STATE OF COLORADO. APPLICABLE TO THE PROJECT.

STRUCTURE EXCAVATION AND BACKFILL SHALL BE IN ACCORDANCE WITH STANDARD M-206-2 UNLESS OTHERWISE NOTED. ADEQUATE SHORING OF THE EXCAVATION ADJACENT TO EXISTING ROADWAYS SHALL BE PROVIDED DURING ALL PHASES OF CONSTRUCTION. METHOD OF SHORING SHALL BE SUBMITTED TO THE ENGINEER PRIOR TO EXCAVATION. PAYMENT FOR SHORING TO BE INCLUDED IN ITEM 206 STRUCTURE EXCAVATION.

EXPANSION JOINT MATERIAL SHALL MEET AASHTO SPECIFICATION M-213.

THE FOLLOWING STRUCTURAL STEEL SHALL BE AASHTO M-183 (ASTM A-36): INTERIOR BRACING OF BOX GIRDERS (INTERIOR CROSS-FRAMES, LATERAL BRACING AT TOP FLANGE AND GUSSET PLATES) AND TEMPORARY ERECTION CROSS FRAMES BETWEEN BOX GIRDERS.

THE FOLLOWING STRUCTURAL STEEL SHALL BE AASHTO M-223 (ASTM A-572 GRADE 50): BOX GIRDER WEBS, FLANGES, TRANSVERSE WEB STIFFENERS, ALL SPLICE MATERIAL, LONGITUDINAL FLANGE STIFFENERS, DIAPHRAGM WEBS AND STIFFENERS, BEARING STIFFENERS AND ALL PINTLE MATERIAL.

FOLLOWING MEMBERS SHALL BE FRACTURE CRITICAL: ALL STRUCTURAL ELEMENTS USING AASHTO M-223 (ASTM A-572 GRADE 50) STEEL AND ANY MEMBER INDICATED AS (FCM) IN THESE DRAWINGS.

ALL BOLTS SHALL BE ⅞ INCH DIAMETER, AASHTO M-164 (ASTM A-325) HIGH STRENGTH, UNLESS OTHERWISE NOTED.

NO WELDING OF ANY ATTACHMENT SHALL BE PERMITTED ON THE FLANGES OF STEEL GIRDERS UNLESS SPECIFICALLY CALLED FOR ON THE PLANS. ALL GROOVE WELDS SHALL BE ULTRASONICALLY TESTED AS PER SECTION 6.7 OF ANSI/AASHTO/AWS D1.5-88.

ALL STEEL, NOT OTHERWISE NOTED, SHALL BE PAINTED IN ACCORDANCE WITH SECTION 509 OF THE STANDARD SPECIFICATIONS. THE COLOR (DARK TAN) SHALL MATCH THE EXISTING FLYOVER BRIDGES (RAMPS B AND C) AND IS TO BE SELECTED FROM TEST PANELS PROVIDED BY THE CONTRACTOR.

GRADE 60 REINFORCING STEEL IS REQUIRED FOR #4 BARS AND LARGER. ALL REINFORCING STEEL SHALL BE EPOXY COATED, UNLESS NOTED OTHERWISE.

THE FOLLOWING TABLE GIVES THE MINIMUM CLASS B LAP SPLICE LENGTH FOR EPOXY COATED REINFORCING BARS.

BAR SIZE	#4	#5	#6	#7	#8	#9	#10	#11
SPLICE LENGTH FOR CLASS B CONCRETE	1'-3"	1'-6"	2'-0"	2'-8"	3'-6"	4'-5"	5'-7"	6'-10"
SPLICE LENGTH FOR CLASS BZ CONCRETE	1'-3"	1'-6"	1'-10"	2'-4"	3'-0"	3'-10"	4'-10"	6'-0"
SPLICE LENGTH FOR CLASS D OR S CONCRETE	1'-3"	1'-6"	1'-10"	2'-2"	2'-10"	3'-7"	4'-7"	5'-7"

THE ABOVE SPLICE LENGTHS SHALL BE INCREASED BY 20 PERCENT FOR 3 BAR BUNDLES AND 33 PERCENT FOR 4 BAR BUNDLES.

A COLORED STRUCTURAL COATING (ACRYLIC) WILL BE REQUIRED ON ALL EXPOSED CONCRETE SURFACES DOWN TO 1'-0" BELOW GROUND LINE. THE COLOR (LIGHT BUFF) SHALL MATCH THE EXISTING FLYOVER BRIDGES (RAMPS B AND C) AND IS TO BE SELECTED FROM TEST PANELS PROVIDED BY THE CONTRACTOR. REQUIREMENTS FOR COATING ARE GIVEN IN REVISION OF SECTION 601, STRUCTURAL CONCRETE (COATING).

THE CONTRACTOR SHALL BE RESPONSIBLE FOR THE STABILITY OF THE STRUCTURE DURING CONSTRUCTION.

FOR STRUCTURE NUMBER INSTALLATION, SEE STANDARD S-614-12.

PERMANENT STEEL DECK FORMS ARE REQUIRED FOR ALL INTERIOR SLAB SPANS AS SHOWN IN THE TYPICAL SECTION, BUT SHALL NOT BE USED ON THE EXTERIOR CANTILEVERS. FORMS SHALL NOT BE ATTACHED TO THE STEEL BOX GIRDERS BY WELDING. SHORING FOR DECK FORMS SHALL NOT BEAR ON STEEL BOX GIRDER LATERAL BRACING OR BOTTOM FLANGES, AND ALL SHORING SHALL BE COMPLETELY REMOVED.

THE INFORMATION SHOWN ON THESE PLANS CONCERNING TYPE AND LOCATION OF UNDERGROUND UTILITIES IS NOT GUARANTEED TO BE ACCURATE OR ALL INCLUSIVE. THE CONTRACTOR IS RESPONSIBLE FOR MAKING HIS OWN DETERMINATION AS TO THE TYPE AND LOCATION OF UNDERGROUND UTILITIES AS MAY BE NECESSARY TO AVOID DAMAGE THERETO.

THE FOLLOWING ARE STANDARD ABBREVIATIONS:

E.F. = EACH FACE
F.F. = FAR FACE
N.F. = NEAR FACE
H.C.L. = HORIZONTAL CONTROL LINE
H.B.P. = HOT BITUMINOUS PAVEMENT
E.W. = EACH WAY
T.F. = TOP FACE
B.F. = BOTTOM FACE
CONT. = CONTINUOUS
(B) = BLACK REINFORCING BAR (DENOTES NON-EPOXY COATED REINFORCING BAR)

STEEL FRAMING AND GIRDER DIMENSIONS ARE BASED ON A TEMPERATURE OF 40° F.

ANY CONSTRUCTION JOINTS AND/OR REINFORCING BAR SPLICES NOT SHOWN ON THE PLANS, BUT PROPOSED BY THE CONTRACTOR, SHALL BE APPROVED BY THE ENGINEER.

DESIGN NOTES

CURRENT AASHTO SPECIFICATIONS:

LIVE LOAD : AASHTO HS-20-44 AND INTERSTATE ALTERNATE
DEAD LOAD : ASSUMES 48 LBS. PER SQ. FT. FOR BITUMINOUS PAVEMENT
ASSUMES 12 LBS. PER SQ. FT. FOR STAY-IN-PLACE CONCRETE FORMWORK

REINFORCED CONCRETE:
CLASS B CONCRETE: fc = 1,200 psi, n = 9, f'c = 3,000 psi AT 28 DAYS
CLASS BZ CONCRETE: fc = 1,600 psi, n = 8, f'c = 4,000 psi AT 28 DAYS
CLASS D CONCRETE: fc = 1,800 psi, n = 8, f'c = 4,500 psi AT 28 DAYS
CLASS S CONCRETE: fc = 2,200 psi, n = 7, f'c = 5,500 psi AT 28 DAYS

REINFORCING STEEL: #4 BARS AND LARGER: fs = 24,000 psi, fy = 60,000 psi

STRUCTURAL STEEL: AASHTO M-183 (ASTM A-36) fs = 20,000 psi, Fy = 36,000 psi
AASHTO M-222 (ASTM A-572) fs = 27,000 psi, Fy = 50,000 psi

DESIGN METHOD:

SUPERSTRUCTURE: SERVICE LOAD DESIGN (WORKING STRESS)
SUBSTRUCTURE: SERVICE LOAD (WORKING STRESS) EXCEPT LOAD FACTOR DESIGN FOR PIER COLUMNS AND CAISSONS AS STRUCTURAL MEMBERS.

INDEX OF DRAWINGS

DWG. NO.	DESCRIPTION
B-1	GENERAL INFORMATION
B-2	SUMMARY OF QUANTITIES
B-3	GENERAL LAYOUT AND TYPICAL SECTION
B-4	GENERAL LAYOUT
B-5	GENERAL LAYOUT
B-6	ENGINEERING GEOLOGY
B-7	CONSTRUCTION LAYOUT - PILING AND CAISSON LAYOUT
B-8	CONSTRUCTION LAYOUT - CAISSON LAYOUT
B-9	CONSTRUCTION LAYOUT - FOOTING LAYOUT
B-10	CAISSON DETAILS
B-11	ABUTMENT 1 DETAILS
B-12	ABUTMENT 8 DETAILS
B-13	WINGWALL DETAILS
B-14	PIER 2 AND PIER 3 DETAILS
B-15	PIER 4 DETAILS
B-16	PIER 5 DETAILS
B-17	PIER 6 DETAILS
B-18	PIER 7 DETAILS
B-19	FRAMING PLAN AND GIRDER ELEVATION
B-20	FRAMING PLAN AND GIRDER ELEVATION
B-21	FRAMING PLAN AND GIRDER ELEVATION
B-22	FRAMING PLAN AND GIRDER ELEVATION
B-23	FRAMING PLAN AND GIRDER ELEVATION
B-24	FRAMING PLAN AND GIRDER ELEVATION
B-25	STEEL BOX GIRDER CAMBER DIAGRAM
B-26	STEEL BOX GIRDER CAMBER DIAGRAM
B-27	INTERMEDIATE STIFFENER AND CROSS-FRAME DETAILS
B-28	END DIAPHRAGM DETAILS - ABUTMENTS 1 AND 8
B-29	INTERIOR DIAPHRAGM DETAILS - PIERS 2 THRU 7
B-30	LATERAL BRACING AND PINTLE DETAILS
B-31	MISCELLANEOUS STEEL DETAILS
B-32	FIELD SPLICES
B-33	DECK SECTION
B-34	DECK REINFORCEMENT DETAILS
B-35	DECK REINFORCEMENT, DETAILS - EXPANSION DEVICE
B-36	CONCRETE PLACEMENT SEQUENCE
B-37	BRIDGE EXPANSION DEVICE (0-9 INCH)
B-38	BRIDGE EXPANSION DEVICE (0-9 INCH)
B-39	BRIDGE RAIL TYPE 4 (470)
B-40	BEARING DEVICE (TYPE III)
B-41	BEARING DEVICE (TYPE III)
B-42	BRIDGE DRAIN (SPECIAL)
B-43	BRIDGE DRAIN (SPECIAL)
B-44	INTERIOR LIGHTING (STEEL BOX GIRDER)
B-45	APPROACH SLAB DETAILS
B-46	SLOPE PAVING DETAILS
B-47	BRIDGE DECK ELEVATIONS
B-48	BRIDGE DECK ELEVATIONS
B-49	BRIDGE DECK ELEVATIONS
B-50	BRIDGE DECK ELEVATIONS
B-51	BRIDGE DECK ELEVATIONS
B-52	ROADWAY APPROACHES

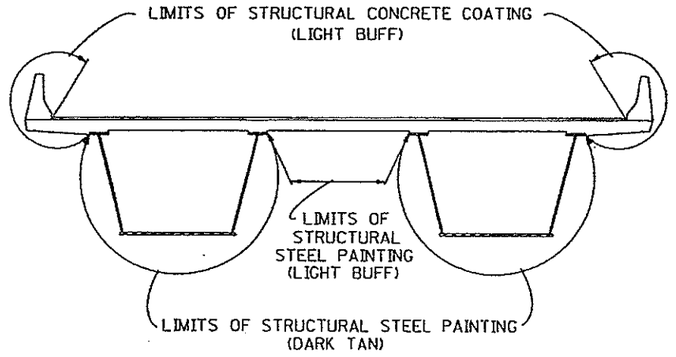

BRIDGE DESCRIPTION

7 ~ SPAN (116'-0¾", 156'-1⅛", 191'-2⅜", 192'-3 13/16", 191'-0⅝", 190'-7 3/16", 150'-0") BRIDGE, WELDED STEEL BOX GIRDER, CONTINUOUS AND COMPOSITE.

OVER I-25 AND E-470
38'-0" ROADWAY CURB TO CURB. 90° 00'00" SKEW (RADIAL)
1'-9" CONCRETE BARRIERS. BRIDGE RAIL TYPE 4 (470)

AS CONSTRUCTED
NO REVISIONS ☐ REVISED ☐ VOID ☐

FED. ROAD REGION	DIVISION	PROJ. NO.	SHEET NO.	SHEET TOTALS
VIII	COLORADO	1A06/1B82	156	

REVISIONS		

CROSS REFERENCE DRAWING NUMBER
B-
SECTION OR DETAIL IDENTIFICATION

	INITIAL	DATE	CHECKED BY	M.&M.	3-90
DESIGNED BY	J.L.S.	1-90	QUANTITIES BY	L.R.C.	3-90
CHECKED BY	M.R.M.	3-90	CHECKED BY	LV	3-90
DETAILED BY	D.L.K.	1-90			

E-470
Engineer 470 Partnership

DIVISION OF HIGHWAYS

GENERAL INFORMATION
RAMP F

Station 634+58.42 to
Station 646+54.25

Near: Denver Sec.3 T.6S. R.67W.

Designer J. Stapleton | Structure Numbers F-17-JX
Detailer D. Kurschinski

Drawing Number B-1 of 52 Drawings

Revision Dates (Preliminary Stage Only)

UDA2:[200,32]SFGEN0114.90R

STATE OF COLORADO
DEPARTMENT OF HIGHWAYS
DIVISION OF HIGHWAYS
STD. FORM NO. 126
REV. FEB. 1984

REVISIONS		
A-2	4-9-90	Revised Quantities	J.L.S.

AS CONSTRUCTED
NO REVISIONS ☐ REVISED ☐ VOID ☐

FED. ROAD REGION	DIVISION	PROJ. NO.	SHEET NO.	SHEET TOTALS
VIII	COLORADO	1A06/1B02	157	

SUMMARY OF QUANTITIES

ITEM NO.	DESCRIPTION	UNIT	SUPER-STRUCTURE	ABUT. 1	PIER 2	PIER 3	PIER 4	PIER 5	PIER 6	PIER 7	ABUT. 8	APPROACH SLABS	TOTAL
206	STRUCTURE EXCAVATION	CU. YD.		7	216	263	226	225	481	378	268		2,064
206	STRUCTURE BACKFILL (CLASS 1)	CU. YD.		218							294		512
206	STRUCTURE BACKFILL (CLASS 2)	CU. YD.		69	140	140	106	101	287	248	114		1,205
403	HOT BITUMINOUS PAVEMENT (GR.E) (HAUL AND ASPHALT) (RUBBERIZED)	TON	538										538
502	STEEL PILING (HP 12 x 74)	LIN. FT.		706									706
503	DRILLED CAISSON (54 INCH)	LIN. FT.			118	104	140	100					462
507	CONCRETE SLOPE AND DITCH PAVING (REINFORCED)	CU. YD.		64							25		89
ⓘ 509	STRUCTURAL STEEL	LB.	2,543,200										2,543,200
512	BEARING DEVICE (TYPE III)	EACH		2	2	2	2	2	2	2	2		16
513	BRIDGE DRAIN (SPECIAL)	EACH				1			1				2
515	WATERPROOFING (MEMBRANE)	SQ. YD.	5,018										5,018
518	BRIDGE COMPRESSION JOINT SEALER	LIN. FT.	20								20	76	116
518	BRIDGE EXPANSION DEVICE (0-9 INCH)	LIN. FT.		38							38		76
A-2 601	CONCRETE CLASS B (BRIDGE)	CU. YD.		148							170		318
601	CONCRETE CLASS D (BRIDGE)	CU. YD.	1,425	28	230	233	108	329	390	222	29	51	3,045
A-2 601	CONCRETE CLASS S (BRIDGE)	CU. YD.					112						112
A-2 602	REINFORCING STEEL	LB.		7,540	27,750	27,750	29,690	29,675	16,795	10,775	9,730		159,705
A-2 602	REINFORCING STEEL (EPOXY COATED)	LB.	513,585	17,320	61,850	62,500	58,915	81,025	80,615	47,875	19,095	7,115	949,895
605	GEOCOMPOSITE DRAIN	SQ. FT.		965							1,093		2,058
A-2 606	BRIDGE RAIL TYPE 4 (470)	LIN. FT.	2,394										2,394
A-2 613	3 INCH ELECTRICAL CONDUIT	LIN. FT.	2,394										2,394
613	INTERIOR LIGHTING (STEEL BOX GIRDER)	EACH	4										4

ⓘ Includes 163,320 Lbs. of A-36 Steel for interior bracing;
14,420 Lbs. of Steel for temporary erection cross-frames
is incidental to the project and will not be paid for separately.

	INITIAL	DATE
DESIGNED BY	L.R.C.	1-90
CHECKED BY	M.R.M.	3-90
DETAILED BY	D.L.K.	1-90
CHECKED BY	L.R.C.	3-90
QUANTITIES BY	LV	3-90

06-APR-1990 14:54
/usr/dcco/e470/ramp1/sfsum0114.90r

UDA2:[200,32]SFSUM0114.90R

Revision Dates (Preliminary Stage Only)

E-470
Engineer 470 Partnership

DIVISION OF HIGHWAYS

SUMMARY OF QUANTITIES

RAMP F

Designer	L. Creager	Structure Numbers	F-17-JX
Detailer	D. Kurschinski		
Drawing Number	B-2 of 52 Drawings		

STATE OF COLORADO
STATE DEPARTMENT OF HIGHWAYS
DIVISION OF HIGHWAYS
O. D. H. FORM NO. 126
REV. FEB. 1984

AS CONSTRUCTED		
NO REVISIONS ☐	REVISED ☐	VOID ☐

FED. ROAD REGION	DIVISION	PROJ. NO.	SHEET NO.	SHEET TOTAL
VIII	COLORADO	IA06/1802	158	

REVISIONS			
A-1	4-2-90	Slope Paving, Drain, Storm	M.R.M.

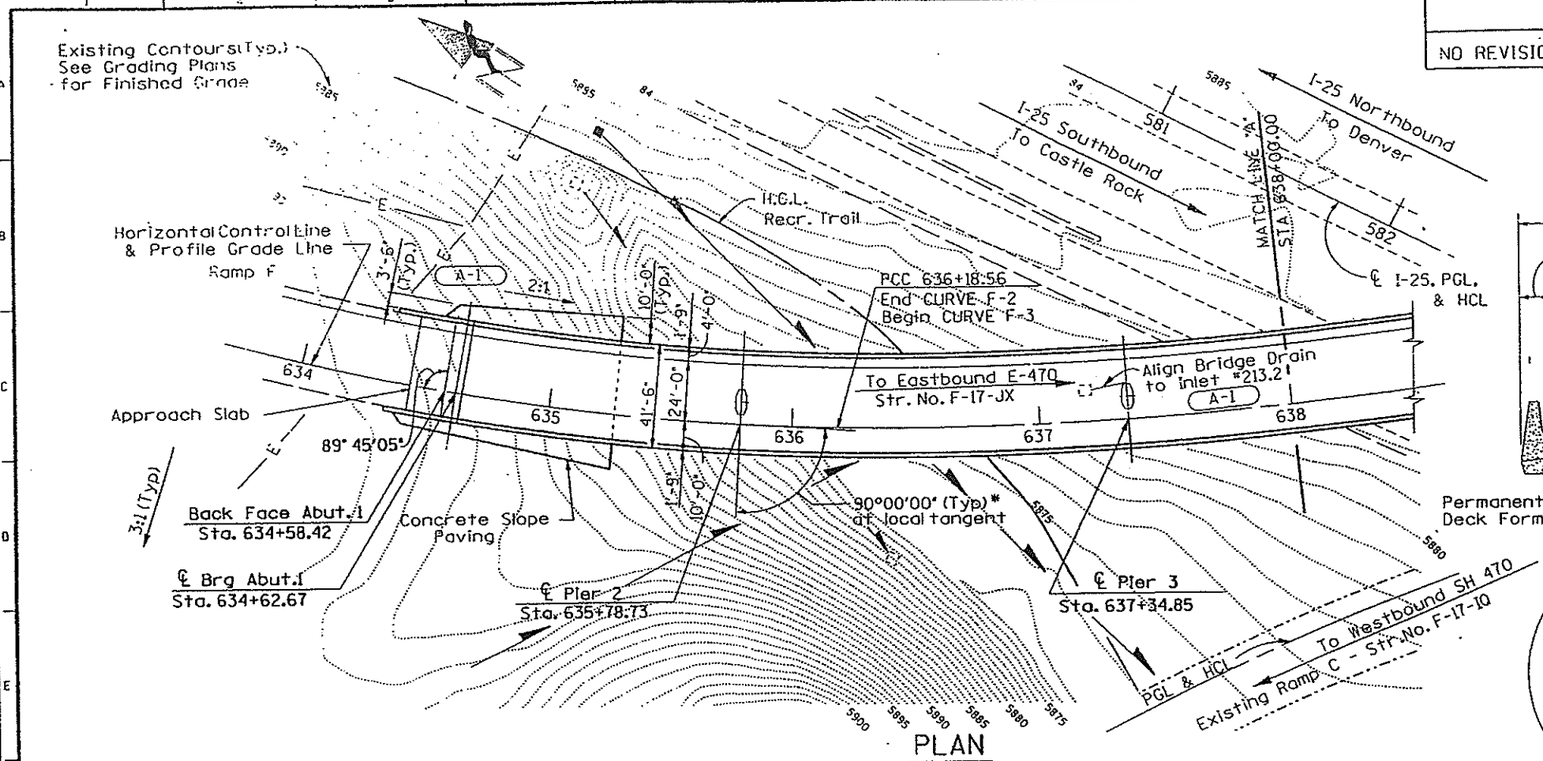

PLAN

Note: All Centerline of Abutments and Piers are radial

Horizontal Sight Distance on Bridge Structure is 275 ft. caused by the Bridge Rail on CURVE F-2; and MDS on the Bridge is 40 MPH.

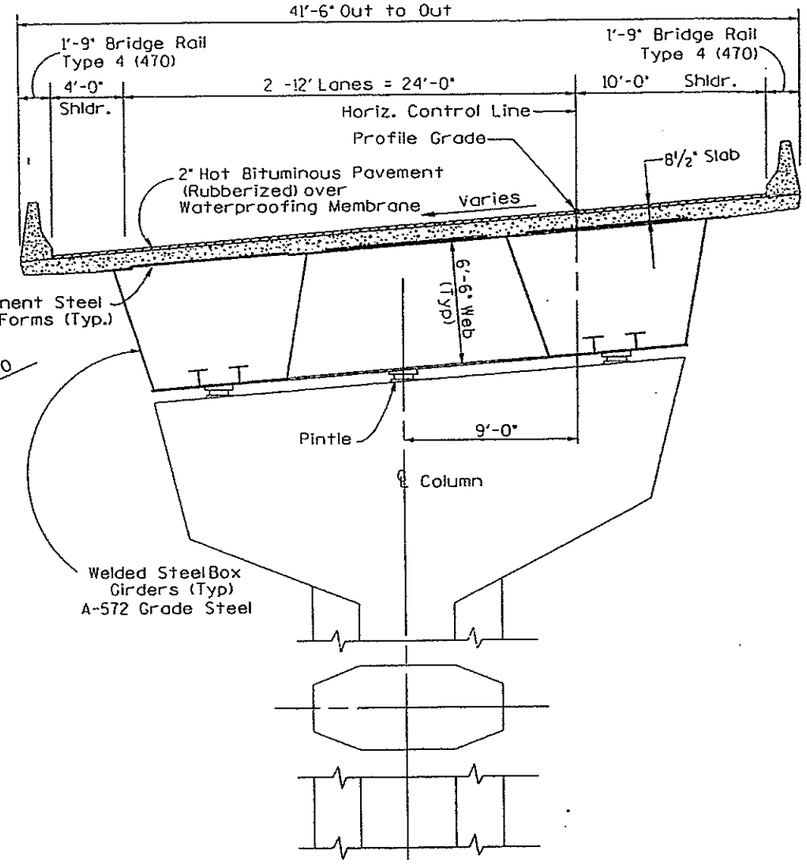

TYPICAL SECTION

CURVE DATA - RAMP F

CURVE F-2	CURVE F-3	CURVE F-4
Δ = 42°32'48" LT.	Δ = 24°32'15" LT.	Δ = 32°41'51" LT.
D = 5°51'10"	D = 3°56'03"	D = 2°43'07"
Tc = 381.14 ft.	Tc = 316.71 ft.	Tc = 618.22 ft.
R = 978.93 ft.	R = 1456.39 ft.	R = 2107.48 ft.
L = 726.93 ft.	L = 623.72 ft.	L = 1202.70 ft.
e = 0.069 '/ft.	e = 0.063 '/ft.	e = 0.049 '/ft.

The superelevation ("e") transitions are detailed on Dwg. No. B-52.

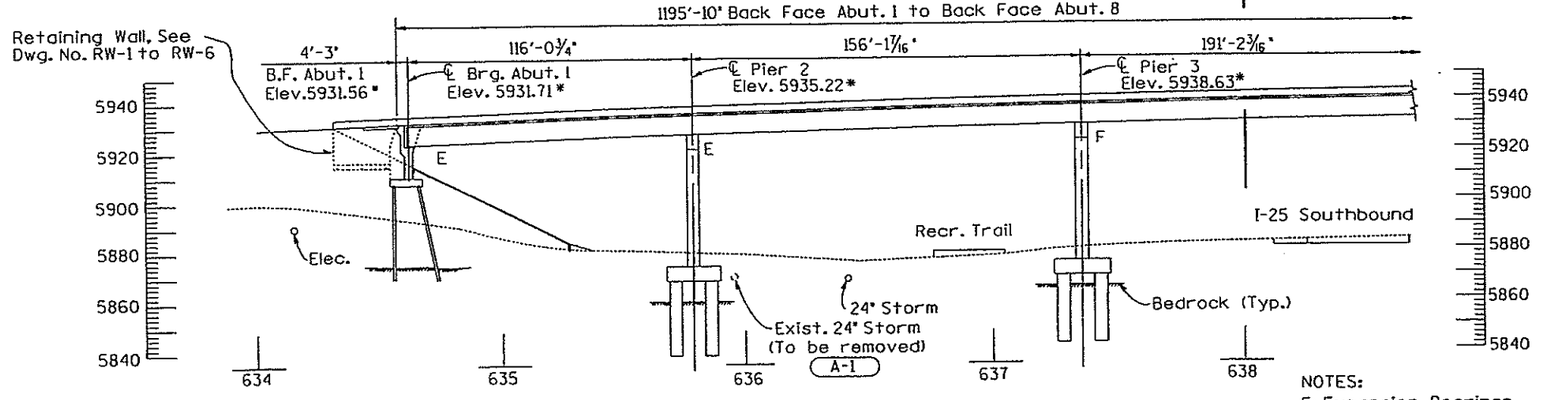

ELEVATION

Taken @ Horizontal Control Line
* Indicates Finished Grade Elevations

NOTES:
E: Expansion Bearings
F: Fixed Bearings
For Ramp Profiles, See Dwg. No. B-5

Live Loading : HS 20-44 & Interstate Alternat

DIVISION OF HIGHWAYS

GENERAL LAYOUT AND TYPICAL SECTION

RAMP F

E-470
Engineer 470 Partnership

Designer Merklinger/Griffith	Structure Numbers	F-17-JX	
Detailer D. Kurschinski			
Drawing Number B-3 of 52 Drawings			

Revision Dates (Preliminary Stage Only)

DESIGNED BY	INITIAL	DATE	CHECKED BY	M.R.M.	12-89
CHECKED BY	M.R.M.	12-89	QUANTITIES BY	W.D.A.	3-90
DETAILED BY	D.L.K.	12-89	CHECKED BY	L.R.C.	3-90
				LV	3-90

30-MAR-1990 08:46
/usr/dcpo/e470/rampf/sfglt0114.90b

UDA2:[200,32]SFGLT0114.90B

STATE OF COLORADO
STATE DEPARTMENT OF HIGHWAYS
DIVISION OF HIGHWAYS
O. D. H. FORM NO. 126
REV. FEB. 1984

AS CONSTRUCTED
NO REVISIONS ☐ REVISED ☐ VOID ☐

FED. ROAD REGION	DIVISION	PROJ. NO.	SHEET NO.	SHEET TOTALS
VIII	COLORADO	1A06/1B02	159	

REVISIONS			
A-1	4-2-90	Min. Vert. Clr., Drain	M.R.M.

	INITIAL	DATE
DESIGNED BY	W.R.M.	12-89
CHECKED BY		M.D.A. 3-90
QUANTITIES BY		L.R.C. 3-90
CHECKED BY	D.L.K.	12-89
DETAILED BY		L.V. 3-90

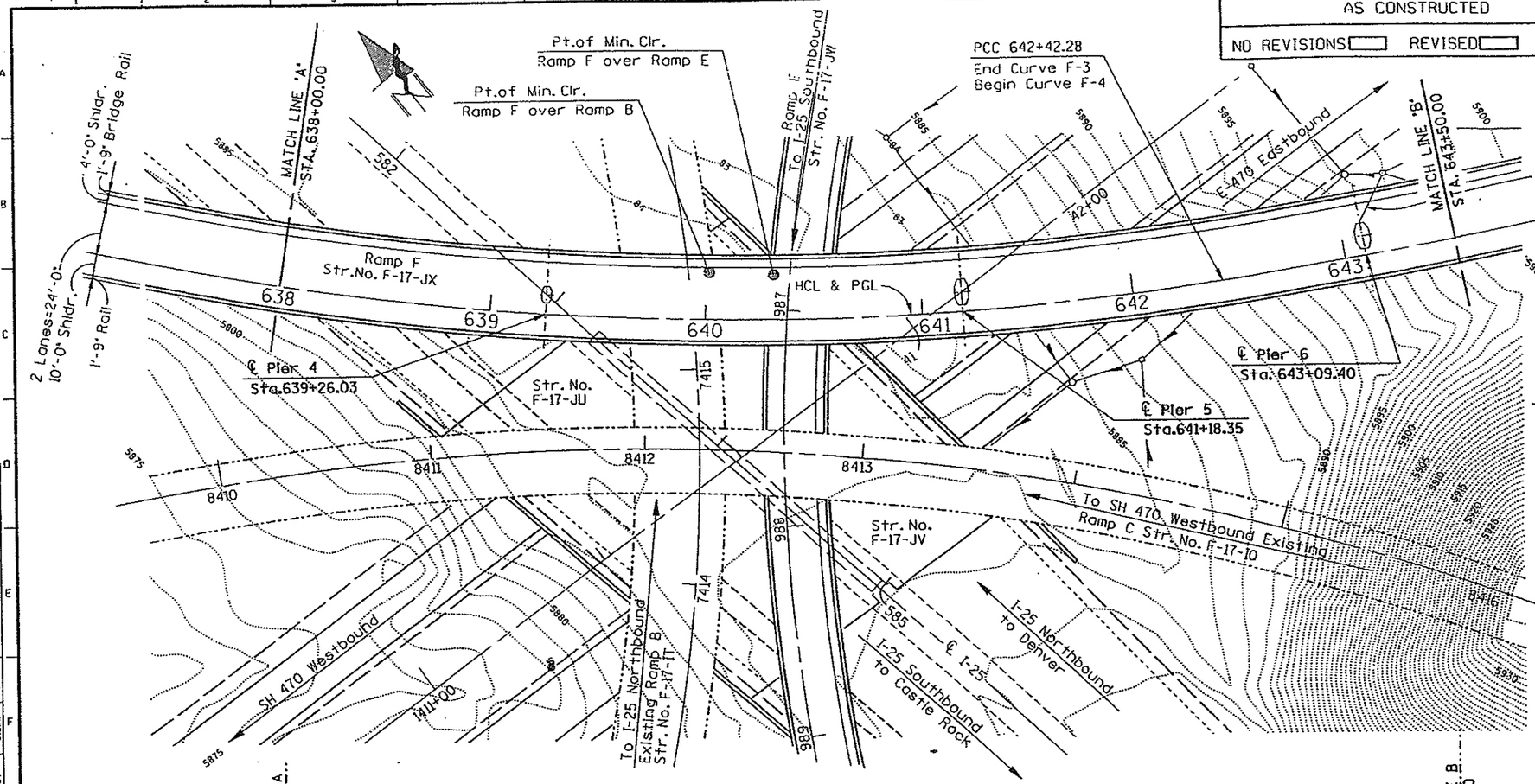

PLAN

NOTE: ALL CENTERLINE OF ABUTMENTS & PIERS ARE RADIAL

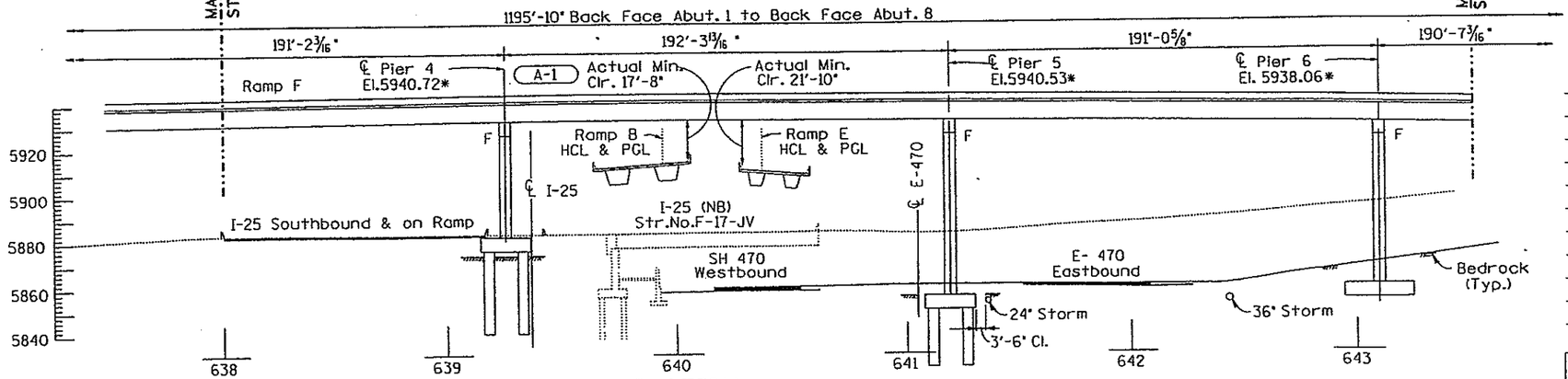

ELEVATION

Taken @ Horizontal Control Line
* Indicates Finished Grade Elevations

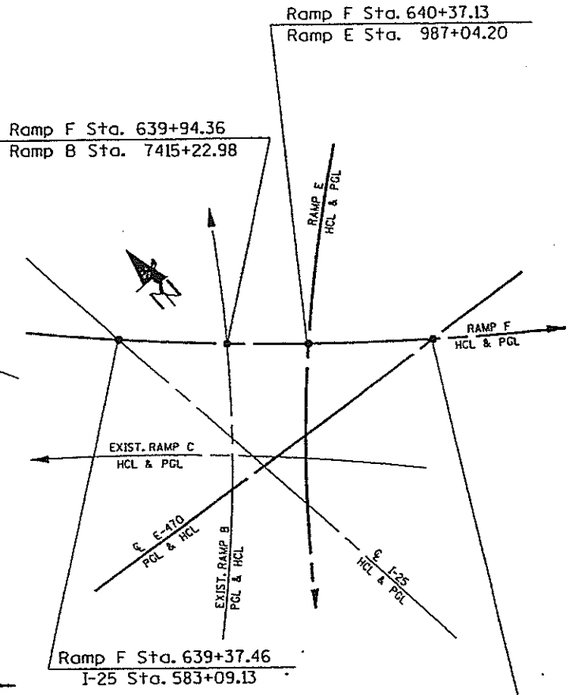

E-470
Engineer 470 Partnership

DIVISION OF HIGHWAYS

GENERAL LAYOUT

RAMP F

Designer Merklinger/Griffith	Structure Numbers	F-17-JX
Detailer D. Kurschinski		
Drawing Number B-4 of 52 Drawings		

Revision Dates (Preliminary Stage Only)

28-MAR-1990 15:50
UDA2:[200,32]SFGLT0214.90B

STATE OF COLORADO
STATE DEPARTMENT OF HIGHWAYS
DIVISION OF HIGHWAYS
D.O.H. FORM NO. 126
REV. FEB. 1984

45

AS CONSTRUCTED					
NO REVISIONS ☐	REVISED ☐	VOID ☐			
FED. ROAD REGION	DIVISION	PROJ. NO.	SHEET NO.	SHEET TOTALS	
VIII	COLORADO	IA06/1802	160		

REVISIONS			
A-1	4-2-90	Ramp B Elev.	M.R.M.

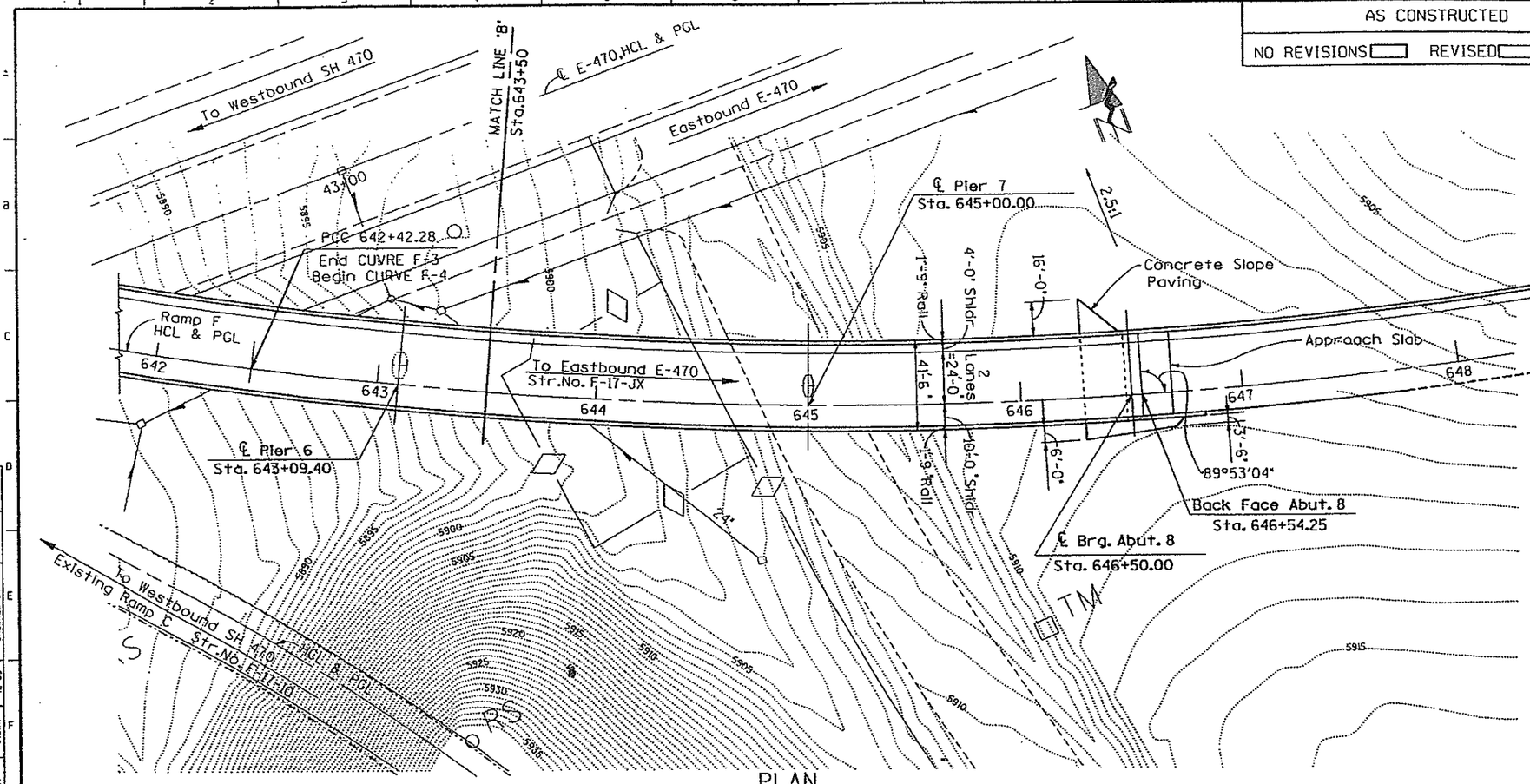

PLAN

Note: All Centerline of Abutments and Piers are radial.

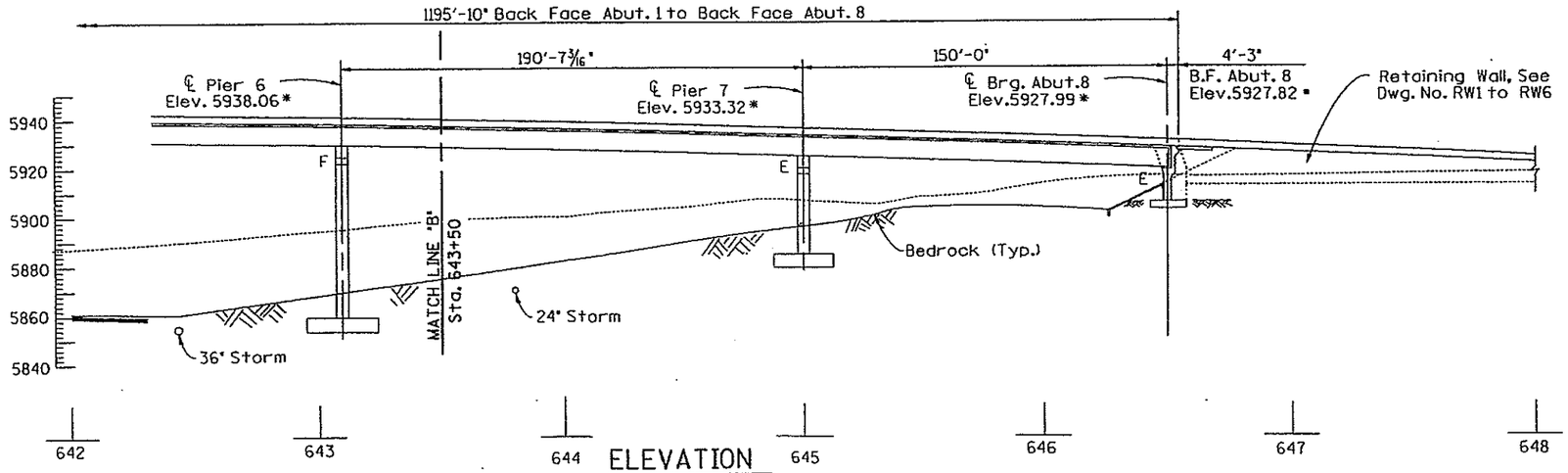

ELEVATION

Taken @ Horizontal Control Line

* Indicates Finished Grade Elevation

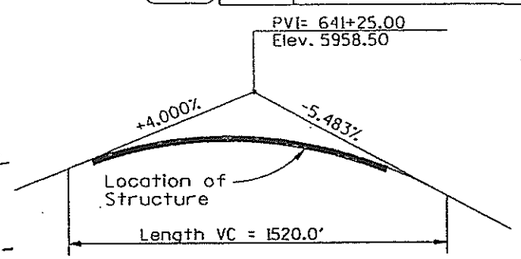

PROFILE - RAMP F

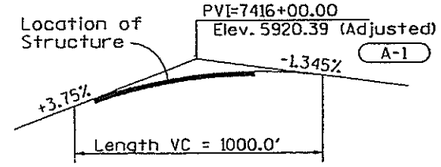

PROFILE - RAMP B

CURVE DATA - RAMP B

Δ = 130°13'00" LT.
D = 7°15'00"
T = 1703.18 ft.
E = 1087.31'
R = 790.29 ft.
L = 1796.10 ft.
e = 0.079 '/ft.

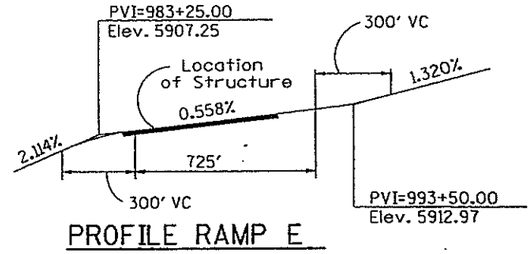

PROFILE RAMP E

CURVE DATA - RAMP E (CURVE E-1)

Δ = 127°19'49" LT.
D = 7°00'00"
Tc = 1653.60 ft.
R = 818.51 ft.
L = 1819.00 ft.
e = 0.079 '/ft.

	INITIAL	DATE
DESIGNED BY	M.R.M.	12-89
CHECKED BY	W.D.A.	3-90
QUANTITIES BY	L.A.C.	3-90
DETAILED BY	D.L.K.	12-89
CHECKED BY	L.V.	3-90

DIVISION OF HIGHWAYS

GENERAL LAYOUT

RAMP F

Designer Merklinger/Griffith	Structure Numbers	F-17-JX
Detailer D. Kurschinski		
Drawing Number B-5 of 52 Drawings		

E-470 Engineer 470 Partnership

Revision Dates (Preliminary Stage Only)

30-MAR-1990 08:53
/usr/dccb/e470/ramp1/sfgt0314.90b

UDA2:[200,32]SFGLT0314.90B

FED ROAD REG NO.	DIVISION	PROJECT NO.	SHEET NO.	TOTAL SHEETS
VII	COLORADO	I A 0 6/1B02	161	

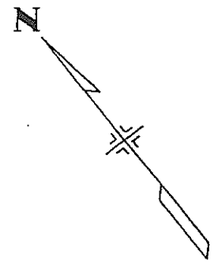

APPROXIMATE SCALE : 1" = 60'

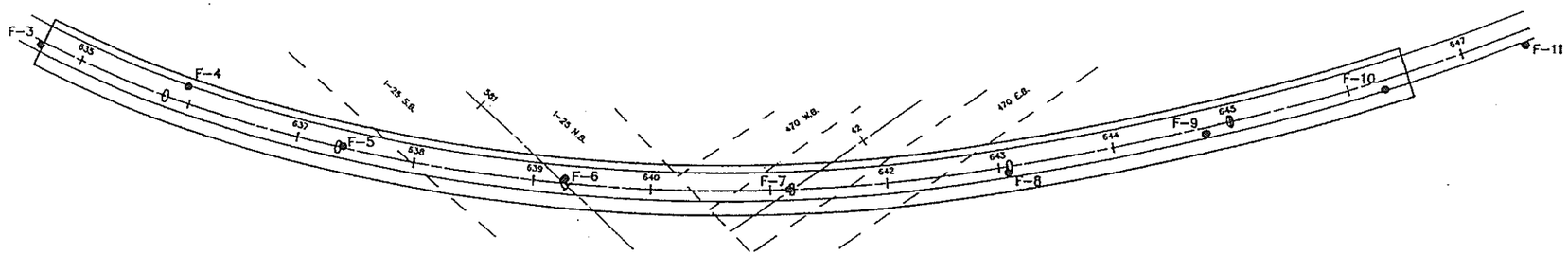

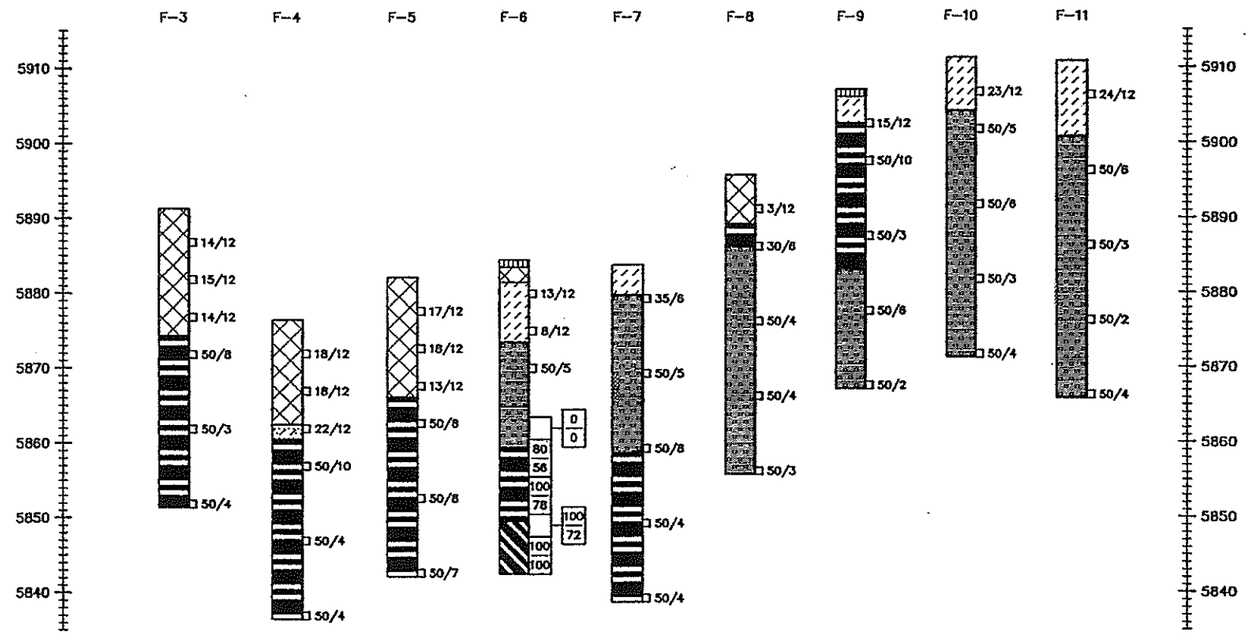

SUMMARY OF TEST RESULTS

Sample No.	Depth	Classification: Corp of Engrs. of Visual	Classification: AASHTO	Grading Analysis, Percent: Gravel	Coarse Sand	Fine Sand	Silt and Clay	Atterberg Limits: Liquid Limit Lw	Plastic Limit Pw	Plastic Index Iw	Water Cont. W %	Wet Unit Weight γ P.C.F.	Unconfined Strength Qu T.S.F.	Triaxial Shear Strength: φ°	C P.S.I.	Dia. of Sample (Inches)
F-3	14	Fill, clay									24.7	122	3.2			1.935
F-3	19	Claystone					62	49	16	33	17.1	131				1.935
F-4	4	Fill, clay									17.2	131				1.935
F-5	39	Claystone									18.4	129	11.2			1.935
F-6	25-26	Claystone					94	54	24	30						1.8
F-6	30-30.4	Claystone									27.0	124	13.2			1.8
F-6	33.6-34	Claystone									23.4	128	10.1			1.8
F-6	35-35.4	Claystone									21.7	136	10.4			1.8
F-6	40.5-40.9	Claystone					58	39	19	20	20.9					1.8
F-7	4	Sandstone					7				4.1					1.935
F-7	34	Claystone					98	60	22	38	20.0	128				1.935
F-7	44	Claystone									20.0	126	7.4			1.935
F-8	9	Claystone									17.8	130	7.8			1.935
F-10	4	Clay, sandy CL									16.2	103				1.935
F-10	9	Sandstone					24				16.6	126				1.935
F-11	4	Clay, sandy CL									11.7	123	11.2			1.935

TYPE OF MATERIAL

- Asphalt pavement and base course.
- Fill, clay, sandy to very sandy, sand, silty to clayey, soft to very stiff, medium dense, medium moist to very moist, gray, brown, rust.
- Clay, sandy, some gravel, stiff to very stiff, medium moist, brown, calcareous and porous in places (CL).
- Sand, clayey, medium dense, moist, brown (SC).
- Sandstone bedrock, slightly silty to clayey, hard to very hard, medium moist to moist, gray, olive, rust.
- Claystone bedrock, silty to very sandy, hard to very hard, moist, gray, olive, brown.
- Interbedded Claystone and sandstone bedrock.

LEGEND

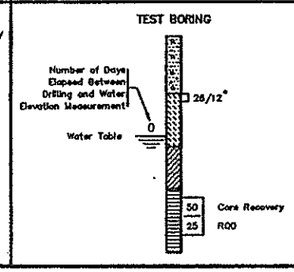

* DRIVE SAMPLE

The symbol 26/12 indicates 26 blows of a 140 pound hammer falling 30 inches were required to drive a 2.5 inch o.d. sampler 12 inches.

Location of Test Boring

NOTES

1. No free water was measured in the borings at the time of drilling.

E-470

RAMP F
E-470 AT I-25

ENGINEERING GEOLOGY

CTL/Thompson, Inc.

Drawn by WJW
Checked by CSM
Date September 1989

STRUCTURE F-17-JX
DWG NO. B - 6 OF 52

STATE OF COLORADO
STATE DEPARTMENT OF HIGHWAYS
DIVISION OF HIGHWAYS:
D.O.H. FORM NO. 126:
REV. FEB. 1984

46

AS CONSTRUCTED		
NO REVISIONS ☐	REVISED ☐	VOID ☐

FED. ROAD REGION	DIVISION	PROJ. NO.	SHEET NO.	SHEET TOTALS
VIII	COLORADO	IA06/IB02	162	

REVISIONS			
A-1	4-2-90	Wingwalls, Total Lengths	M.R.M.

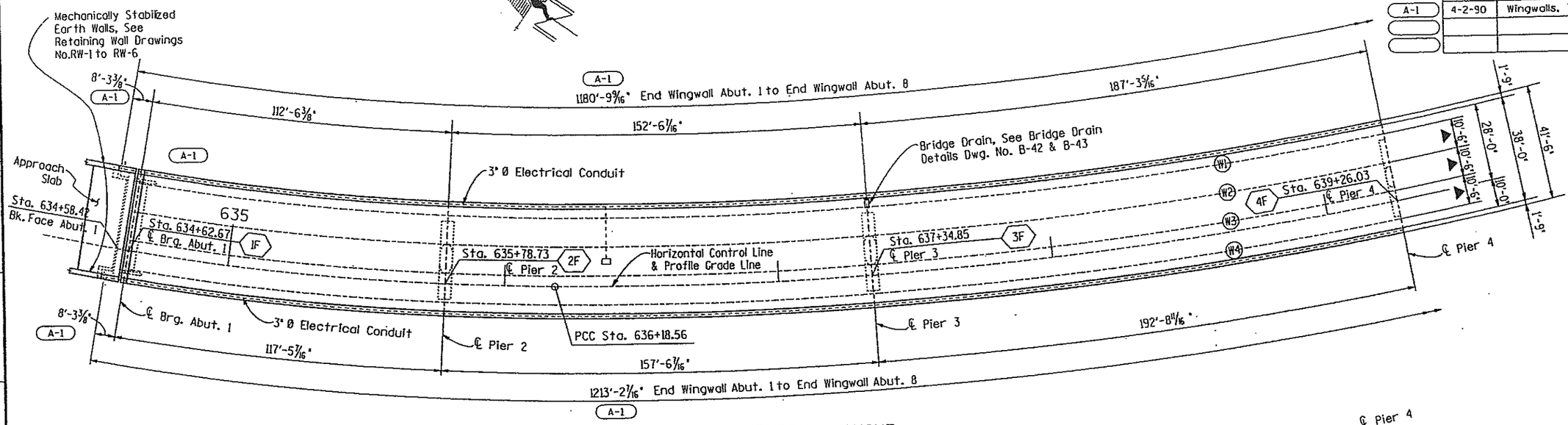

CONSTRUCTION LAYOUT

▲ Dimensions Measured along the Slope of the Structure

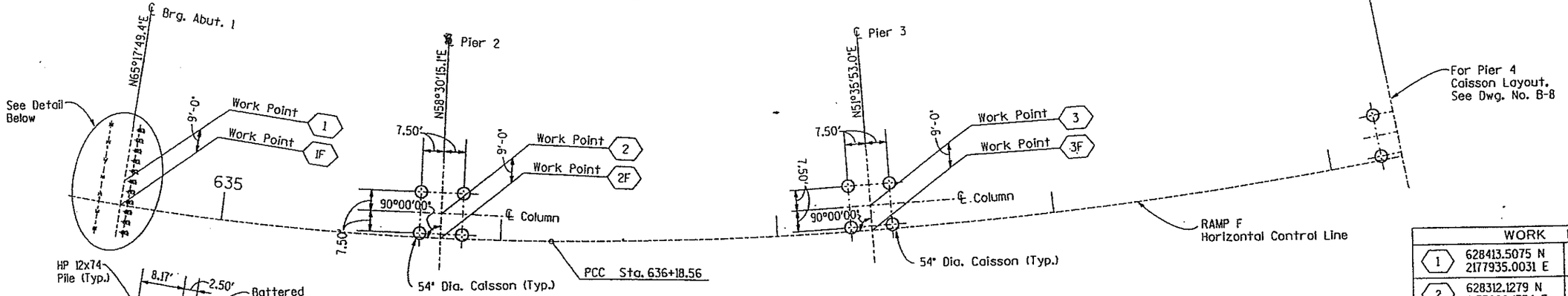

PILING AND CAISSON LAYOUT

WORK POINTS			
1	628413.5075 N 2177935.0031 E	1F	628409.7463 N 2177926.8267 E
2	628312.1279 N 2177989.1334 E	2F	628307.4260 N 2177981.4593 E
3	628185.5681 N 2178078.5292 E	3F	628179.9775 N 2178071.4761 E

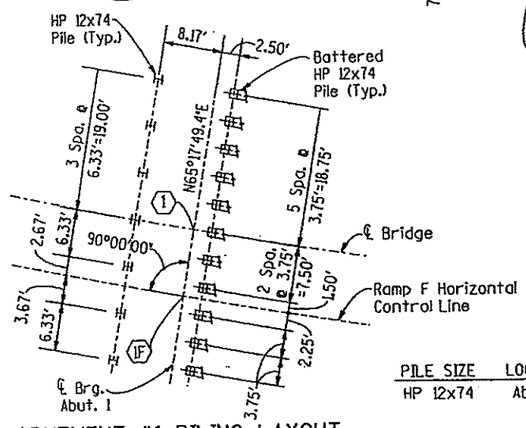

ABUTMENT #1 PILING LAYOUT

PILE SIZE	LOCATION	EST. TIP ELEV.
HP 12x74	Abut. 1	5869.00

NOTES:

1. Piling and Caisson Dimensions are Shown at Bottom of Concrete Piling or Caisson Cap.
2. ⊞ Indicates Piling to be Battered, 3:12 in the Direction Shown.
3. Piling at Abutment #1 shall be End-Bearing HP12x74 with the Design Pile Load of 83 Tons.
4. For Caisson Data, See Dwg. No. B-10.

E-470
Engineer 470 Partnership

DIVISION OF HIGHWAYS

CONSTRUCTION LAYOUT PILING AND CAISSON LAYOUT RAMP F

Designer	Stapleton/Merklinger	Structure Numbers	F-17-JX
Detailer	M. Davison		
Drawing Number	B-7 of 52 Drawings		

Revision Dates (Preliminary Stage Only)

INITIAL	DATE	CHECKED BY	JLS	12-89
DESIGNED BY JLS	12-89		MRM	12-89
CHECKED BY DKB/WDA	3-90	QUANTITIES BY	LCR	3-90
DETAILED BY MED	12-89	CHECKED BY	LV	3-90

UDA2:[200,32]SFCON0114.90F

STATE OF COLORADO
STATE DEPARTMENT OF HIGHWAYS
DIVISION OF HIGHWAYS:
D.O.H. FORM NO. 126:
REV. FEB. 1984

47

AS CONSTRUCTED		
NO REVISIONS ☐	REVISED ☐	VOID ☐

FED. ROAD REGION	DIVISION	PROJ. NO.	SHEET NO.	SHEET TOTALS
VIII	COLORADO	IA06/IB02	163	

REVISIONS			
A-1	4-2-90	Wingwalls, Total Lengths	M.R.M.

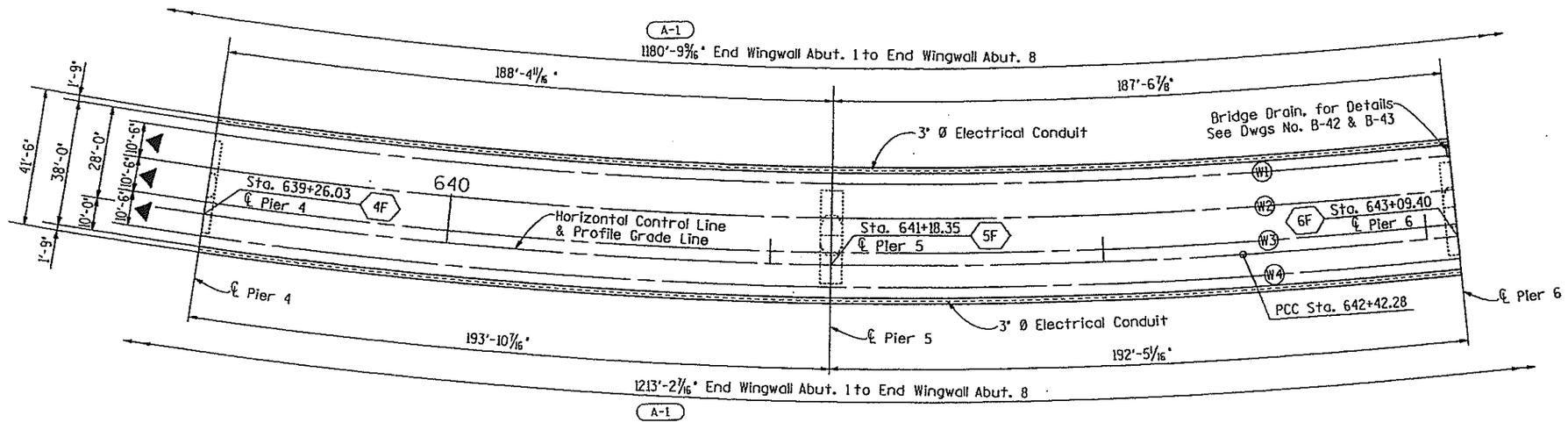

CONSTRUCTION LAYOUT

▲Dimensions Measured along the Slope of the Structure

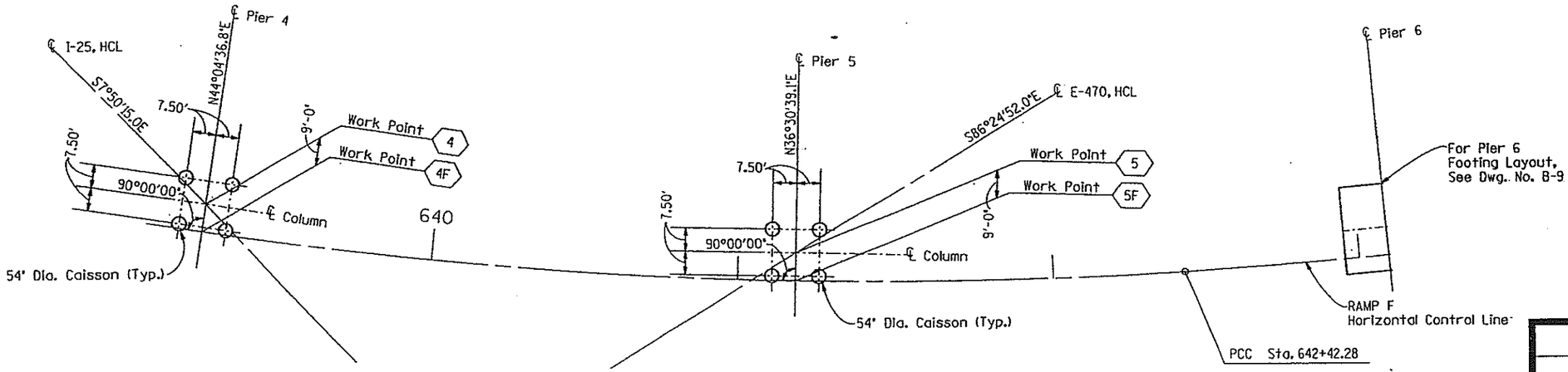

WORK POINTS			
4	628044.8340 N 2178205.9715 E	4F	628038.3683 N 2178199.7109 E
5	627921.3174 N 2178351.6488 E	5F	627914.0837 N 2178346.2941 E

CAISSON LAYOUT

NOTES:

1. Caisson Dimensions are Shown at Bottom of Concrete Caisson Cap.
2. For Caisson Data, See Dwg. No. B-10.

DESIGNED BY	INITIAL	DATE	CHECKED BY	JLS	12-89
CHECKED BY	JLS	12-89	QUANTITIES BY	MRM	12-89
DETAILED BY	DKB/	3-90	CHECKED BY		
	MED	12-89			

30-MAR-1990 16:25
/usr/dcco/e470/470rev/sfcon0214.90f

E-470
Engineer 470 Partnership

DIVISION OF HIGHWAYS

CONSTRUCTION LAYOUT
CAISSON LAYOUT
RAMP F

Designer Stapleton/Merklinger	Structure Numbers	F-17-JX	
Detailer M. Davison			
Drawing Number B-8 of Drawings			

Revision Dates (Preliminary Stage Only)

UDA2:[200,32]SFCON0214.90F

STATE OF COLORADO
STATE DEPARTMENT OF HIGHWAYS
DIVISION OF HIGHWAYS
I. D. H. FORM NO. 126
REV. FEB. 1984

AS CONSTRUCTED					
NO REVISIONS ☐	REVISED ☐	VOID ☐			
FED. ROAD REGION	DIVISION	PROJ. NO.	SHEET NO.	SHEET TOTALS	
VIII	COLORADO	IA06/1802	164		

REVISIONS			
A-1	4-2-90	Abut. 8 Footing, Lengths	J.L.S.

INITIAL	DATE
DESIGNED BY JLS	12-89
CHECKED BY DXB/MDA	3-90
DETAILED BY MED	12-89
CHECKED BY	12-89
QUANTITIES BY LRC	3-90
CHECKED BY LV	3-90
J.L.S	12-89
MRM	12-89

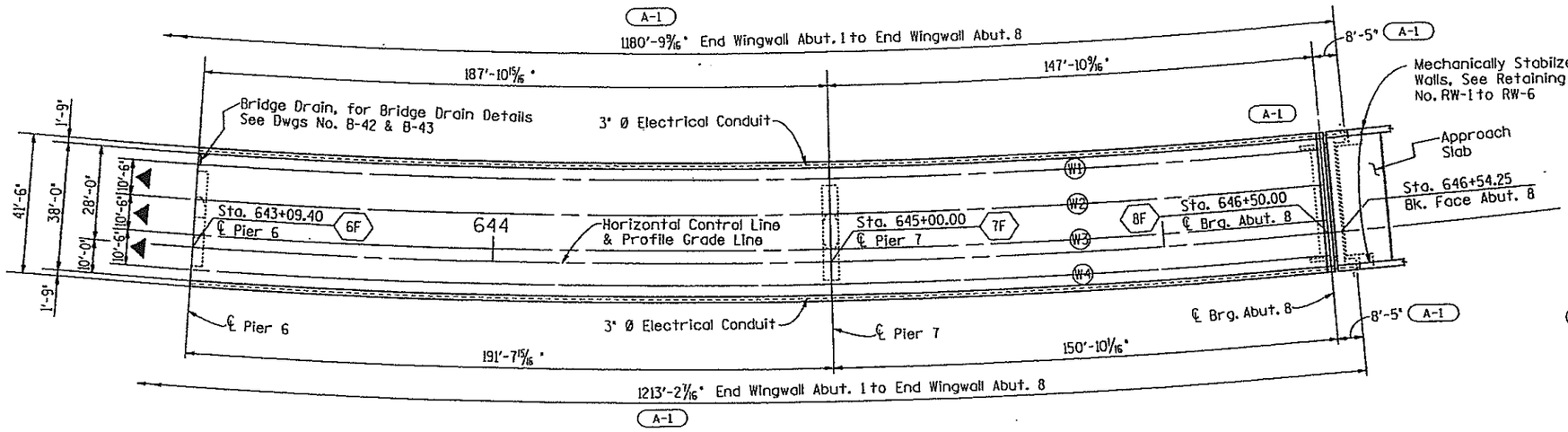

CONSTRUCTION LAYOUT

▲ Dimensions Measured along the Slope of the Structure

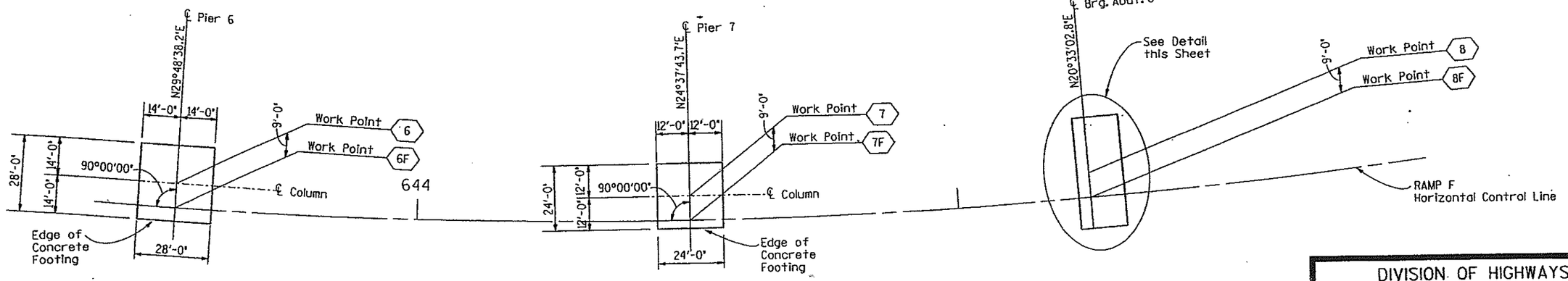

FOOTING LAYOUT

ABUTMENT 8 FOOTING LAYOUT

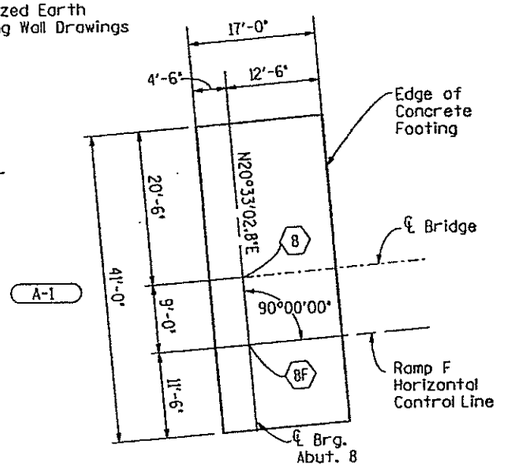

WORK POINTS			
6	627818.1926 N 2178511.0885 E	6F	627810.3835 N 2178506.6143 E
7	627731.4133 N 2178679.8000 E	7F	627723.2321 N 2178676.0493 E
8	627674.0518 N 2178817.6712 E	8F	627665.6246 N 2178814.5119 E

NOTES:

1. Footing Dimensions are Shown at Bottom of Concrete.
2. The Maximum Footing Pressure is:
   Pier 6 = 4.5 Tons/Sq. Ft.
   Pier 7 = 4.7 Tons/Sq. Ft.
   Abut. 8 = 4.6 Tons/Sq. Ft.

E-470
Engineer 470 Partnership

DIVISION OF HIGHWAYS

CONSTRUCTION LAYOUT
FOOTING LAYOUT
RAMP F

Designer Stapleton/Merklinger		Structure Numbers	F-17-JX
Detailer M. Davison			
Drawing Number 8-9	of	Drawings	

Revision Dates (Preliminary Stage Only)

30-MAR-1990 15:20
/usr/dcco/e470/470rev/stcon0314.90f
UDA2:[200,321]SFCON0314.90F

STATE OF COLORADO
DEPARTMENT OF HIGHWAYS
DIVISION OF HIGHWAYS
STD. FORM NO. 126
REV. FEB. 1984

AS CONSTRUCTED					
NO REVISIONS ☐	REVISED ☐	VOID ☐			
FED. ROAD REGION	DIVISION	PROJ. NO.	SHEET NO.	SHEET TOTALS	
VIII	COLORADO	IA06/1862	165		

REVISIONS		

CAISSON DATA

LOCATION	TOTAL NUMBER OF CAISSONS	DIMENSIONS					ELEVATIONS			REINFORCEMENT		STANDARD HOOK REQUIRED	DESIGN AXIAL LOAD PER CAISSON
		"A"	"B"	"C"	"D"	"E"	"F"	"G"	"H"	# OF BARS	SIZE		
PIER 2	4	54"	29'-6"	N/A	4'-0"	22'-0"	5868.0	5860.5	5838.5	20	#10(B)	NO	545 Tons
PIER 3	4	54"	26'-0"	N/A	4'-0"	22'-0"	5870.0	5866.0	5844.0	20	#10(B)	NO	545 Tons
PIER 4	4	54"	35'-0"	N/A	4'-0"	33'-6"	5875.0	5873.5	5840.0	20	#10(B)	NO	560 Tons
PIER 5	4	54"	25'-0"	N/A	4'-0"	25'-0"	5852.0	5852.0	5827.0	20	#10(B)	NO	630 Tons

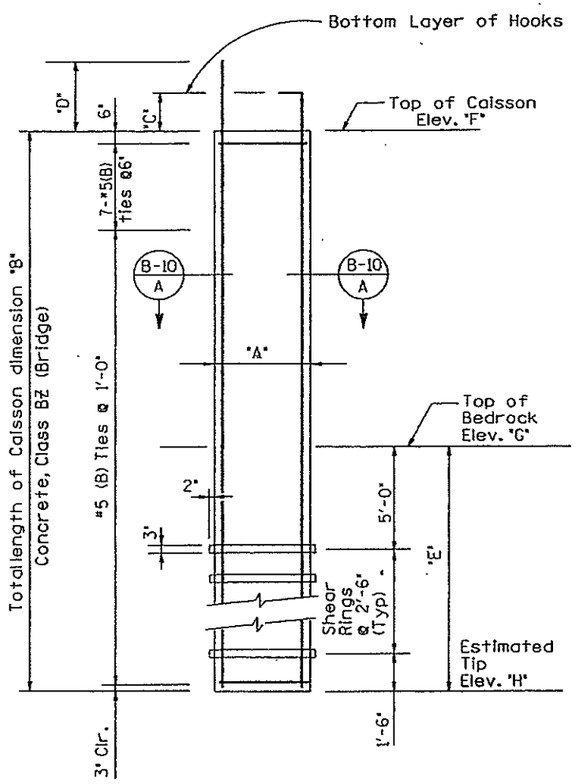

ELEVATION

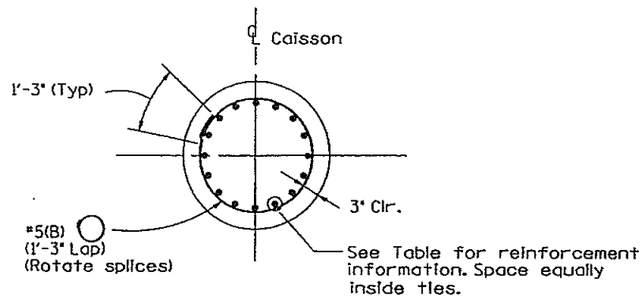

TYPICAL SECTION B-10 A

NOTES:

1. For Caisson layout, see Dwg. No. B-7 & 8-8.
2. Dimension "A" shown is the outside diameter of the caisson.
3. Dimension "B" shown is based on an estimated top of bedrock elevation "G". If Elevation "G" is higher than elevation "F", then elevation "G" has been recorded as "F".
4. Dimension "C" is the projected length of caisson reinforcing to be extended above top of Caisson, to Bottom layer of Hooks.
5. Dimension "D" is the projected length of caisson reinforcing to be extended above top of caisson.
6. All reinforcing is non epoxy-coated. (B): indicates non Epoxy-Coated Reinforcing. No substitution.
7. Reinforcing extending above the top of Caisson are included and will not be paid for separately.
8. Top of bedrock elevation shall be verified at the time of construction by the Engineer.
9. Dimension "E" shown is the required minimum penetration in bedrock.
10. Provide a clean roughened surface at top of Caisson.

	INITIAL	DATE
DESIGNED BY	M.R.M.	1-90
CHECKED BY	D.K.S.	3-90
DETAILED BY	D.L.K.	1-90
CHECKED BY	L.V.	3-90
QUANTITIES BY	L.R.C.	3-90
CHECKED BY	D.K.S.	3-90

E-470
Engineer 470 Partnership

DIVISION OF HIGHWAYS

CAISSON DETAILS

RAMP F

Designer	M. Merklinger	Structure Numbers	F-17-JX
Detailer	D. Kurschinski		
Drawing Number B-10 of 52 Drawings			

Revision Dates (Preliminary Stage Only)

UDA2:[200,32]SECAS0113.90H

STATE OF COLORADO
STATE DEPARTMENT OF HIGHWAYS
DIVISION OF HIGHWAYS:
D.O.H. FORM NO. 126:
REV. FEB. 1984

49

AS CONSTRUCTED		
NO REVISIONS ☐	REVISED ☐	VOID ☐

FED. ROAD REGION	DIVISION	PROJ. NO.	SHEET NO.	SHEET TOTAL
VIII	COLORADO	1A06/1B02	166	

REVISIONS			
A-1	4-2-90	Wingwall Lengths	M.R.M.

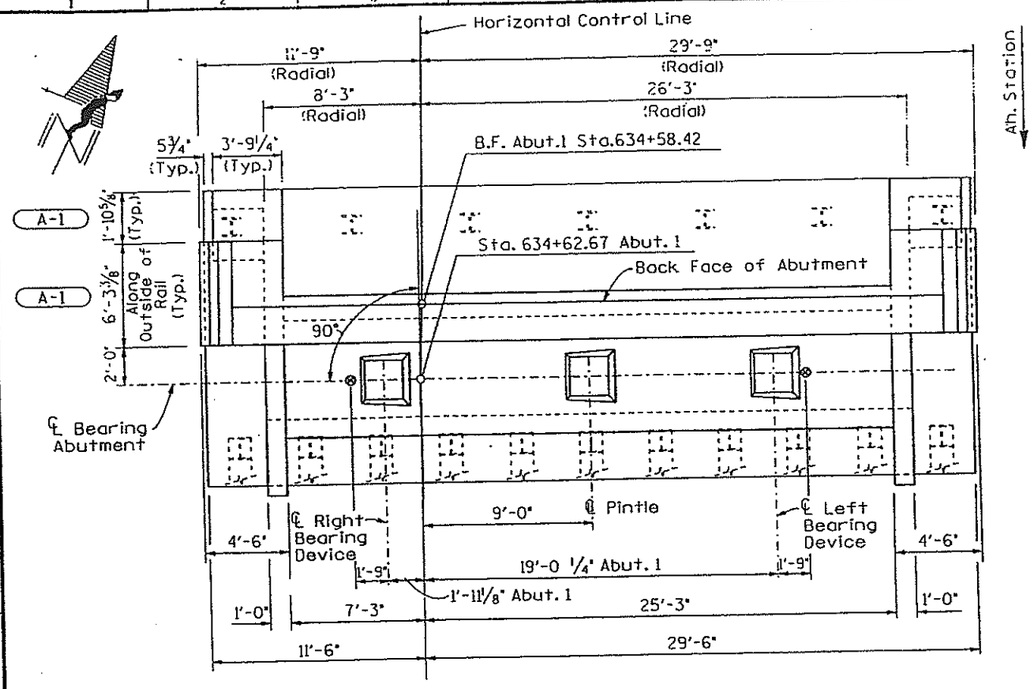

PLAN

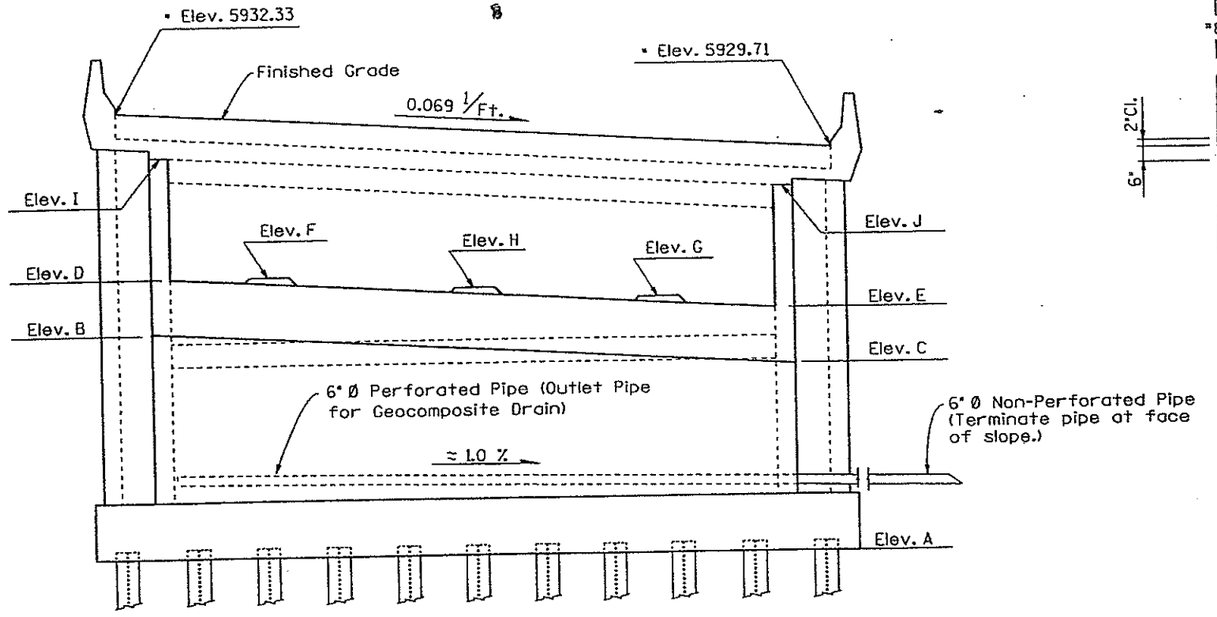

ELEVATION

• Taken @ Front Face Of Abutment

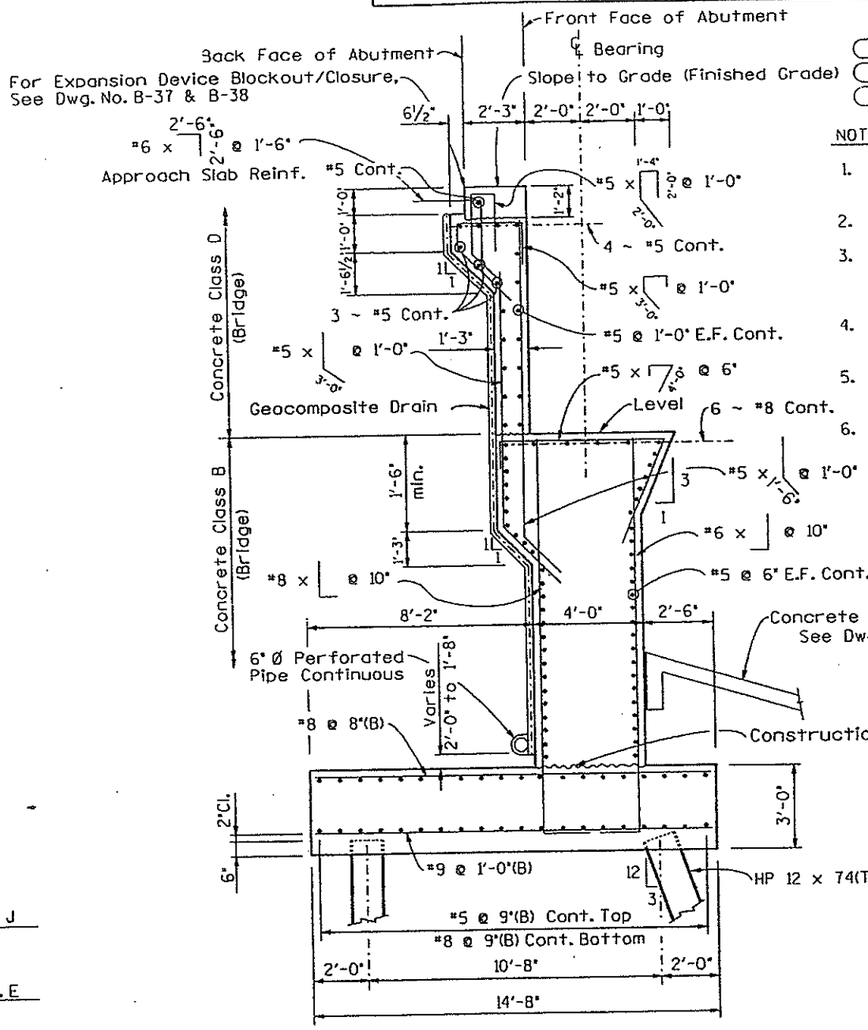

TYPICAL SECTION

NOTES:

1. Jacking Location for Bearing Device Replacement are Indicated ⊗.
2. For Pintle Details, See Dwg. No. B-30.
3. 6" Ø Perforated and Non-Perforated Pipes are Includede in the Cost for Geocomposite Drain.
4. For Bearing Device Details, See Dwg. No. B-40 and B-41.
5. Space reinforcement to Avoid Pintle and and Bearing Device Anchor Bolts.
6. For Limits of Quantities for Structure Excavation and Backfill at Abutments, See Dwg. No. B-12.

ABUT. 1	
ELEV. A	5907.00
ELEV. B	5920.42
ELEV. C	5918.04
ELEV. D	5923.35
ELEV. E	5921.11
ELEV. F	5923.22
ELEV. G	5921.77
ELEV. H	5922.55
ELEV. I	5929.85
ELEV. J	5927.61

	INITIAL	DATE			
DESIGNED BY	LRC/MRM	1-90	CHECKED BY		
CHECKED BY	JLS/DKB	3-90	QUANTITIES BY	LRC	3-90
DETAILED BY	DLK	1-90	CHECKED BY	LV	3-90

E-470
Engineer 470 Partnership

DIVISION OF HIGHWAYS

ABUTMENT I DETAILS

RAMP F

Designer	Creager/Merklinger	Structure Numbers	F-17-JX
Detailer	D. Kurschinski		
Drawing Number	B-11	of 52	Drawings

Revision Dates (Preliminary Stage Only)

30-MAR-1990 09:06
/usr/acco/a470/ramp1/sfab1014.90J

UDA2:[200,32]SFABT0114.90J

STATE OF COLORADO
STATE DEPARTMENT OF HIGHWAYS
DIVISION OF HIGHWAYS
S. O. H. FORM NO. 126
REV. FEB. 1984

AS CONSTRUCTED
NO REVISIONS ☐ REVISED ☐ VOID ☐

FED. ROAD REGION	DIVISION	PROJ. NO.	SHEET NO.	SHEET TOTALS
VIII	COLORADO	IAOG/IBO2	167	

REVISIONS			
A-1	4-2-90	Wingwall Lengths	M.R.M.

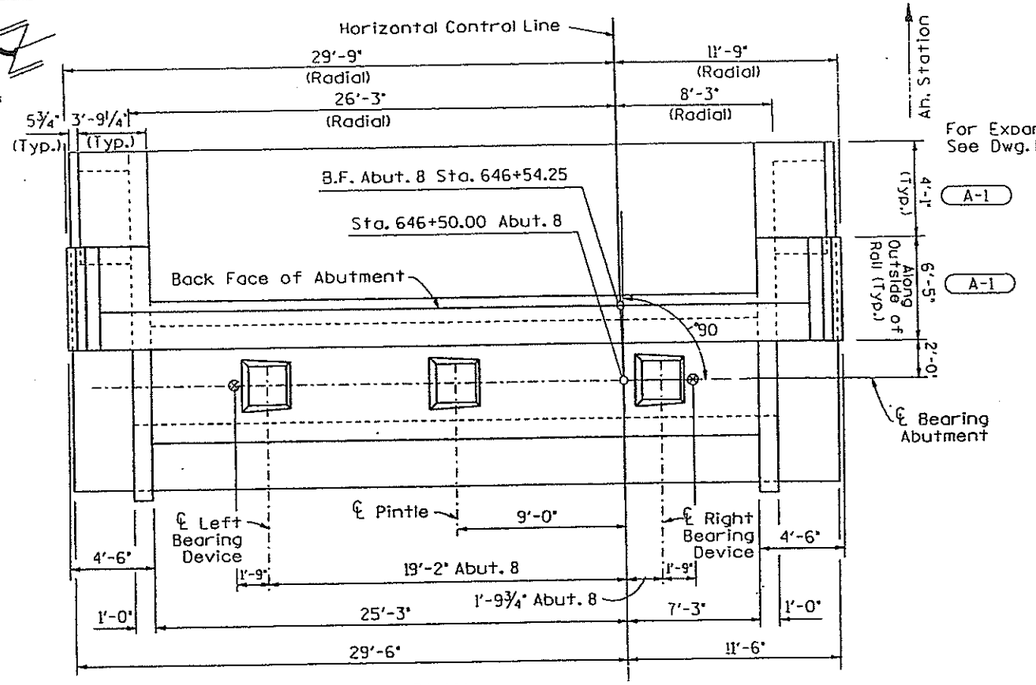

PLAN

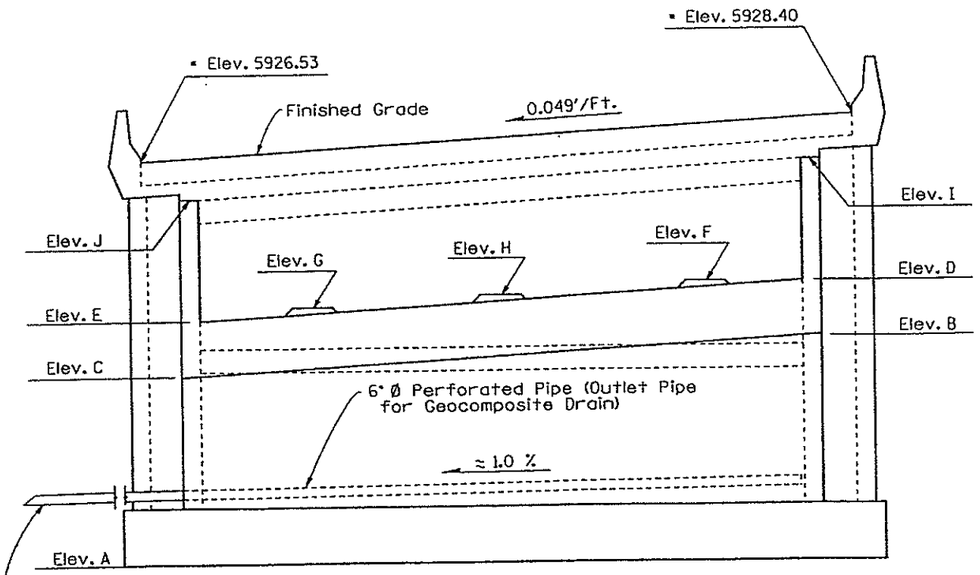

ELEVATION

• Taken @ Front Face Of Abutment

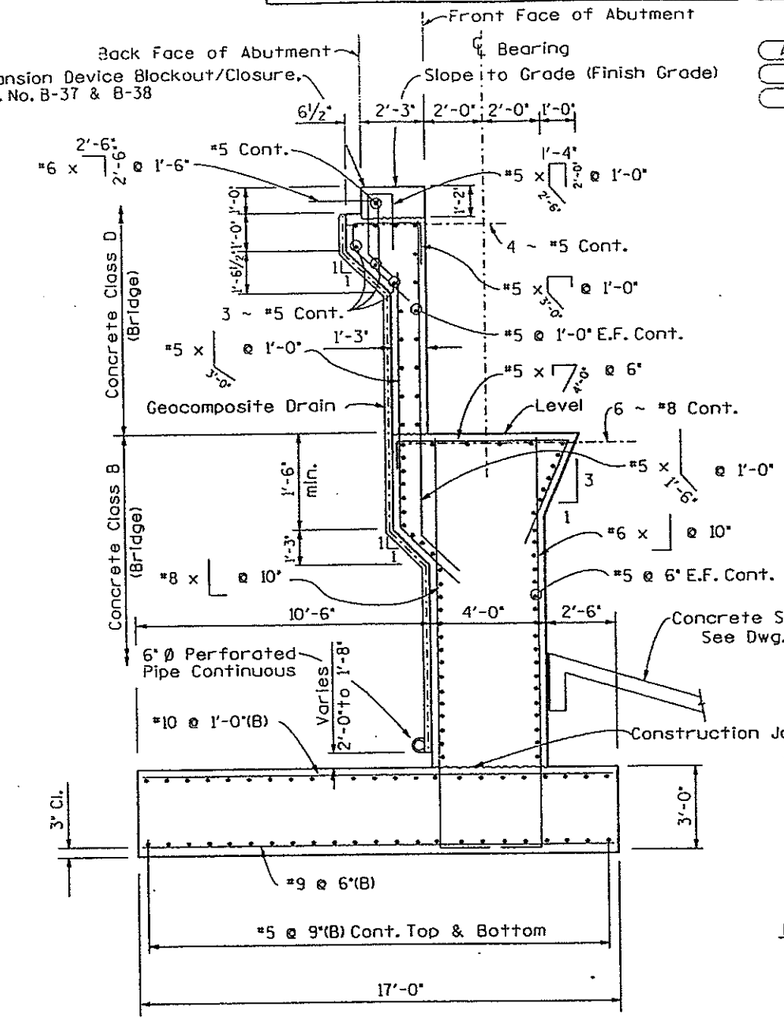

TYPICAL SECTION

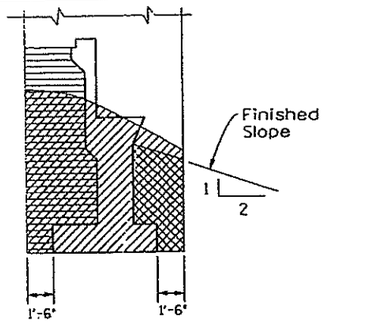

LIMIT OF QUANTITIES
FOR ABUTMENTS
Similar for Wingwall, Retaining Walls and piers

NOTES:

For Abutment Notes, See Dwg. No. B-11.

ABUT. 8	
ELEV. A	5902.00
ELEV. B	5916.55
ELEV. C	5914.86
ELEV. D	5919.50
ELEV. E	5917.91
ELEV. F	5919.46
ELEV. G	5918.44
ELEV. H	5919.04
ELEV. I	5926.00
ELEV. J	5924.41

	INITIAL	DATE	CHECKED BY	LAC	3-90
DESIGNED BY	LRC/MRM	1-90	QUANTITIES BY	LV	3-90
CHECKED BY	JLS/DKB	3-90	CHECKED BY		
DETAILED BY	DLK	1-90			

E-470
Engineer 470 Partnership

DIVISION OF HIGHWAYS

ABUTMENT 8 DETAILS

RAMP F

Designer Creager/Merklinger	Structure Numbers	F-17-JX	
Detailer D. Kurschinski			
Drawing Number B-12 of 52 Drawings			

Revision Dates (Preliminary Stage Only)

30-MAR-1990 09:19
/usr/acco/e470/ramp1/sfabt0214.90]

UDA2:[200,32]SFABT0214.90J

STATE OF COLORADO
STATE DEPARTMENT OF HIGHWAYS
DIVISION OF HIGHWAYS
S.O.H. FORM NO. 126
REV. FEB. 1984

AS CONSTRUCTED
NO REVISIONS ☐ REVISED ☐ VOID ☐

FED. ROAD REGION	DIVISION	PROJ. NO.	SHEET NO.	SHEET TOTALS
VIII	COLORADO	1A06/1B02	168	

REVISIONS		
A-1	4-2-90	Elevations, Conduit	J.L.S.

LOCATION	ABUT. 1		ABUT. 8	
	LEFT	RIGHT	LEFT	RIGHT
Elev. M	5927.12	5929.90	5923.90	5925.94
Elev. N	5921.11	5923.35	5917.91	5919.50

	DATE	CHECKED BY	DATE	CHECKED BY
INITIAL	1-90	LRC	3-90	LV
DESIGNED BY	LRC	QUANTITIES BY		CHECKED BY
CHECKED BY	JLS/DKB			
DETAILED BY	DLK			

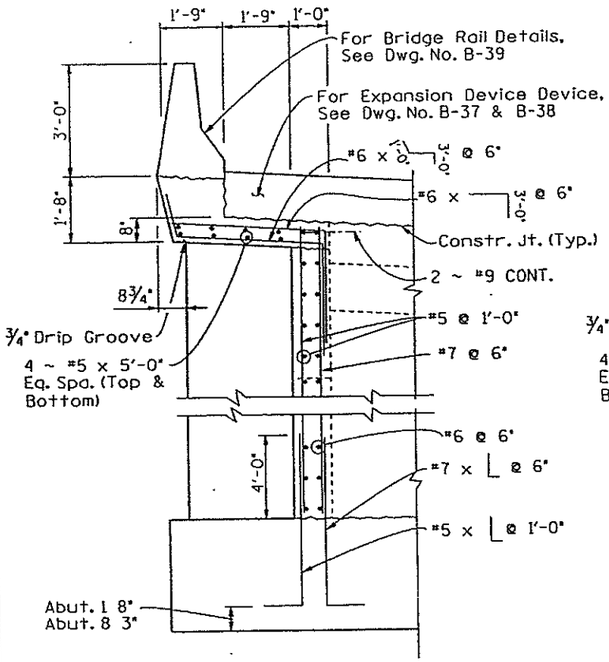

SECTION B-13 A

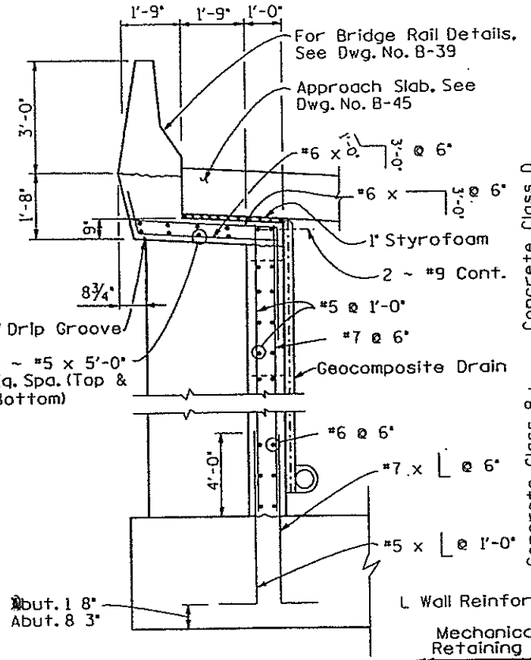

SECTION B-13 B

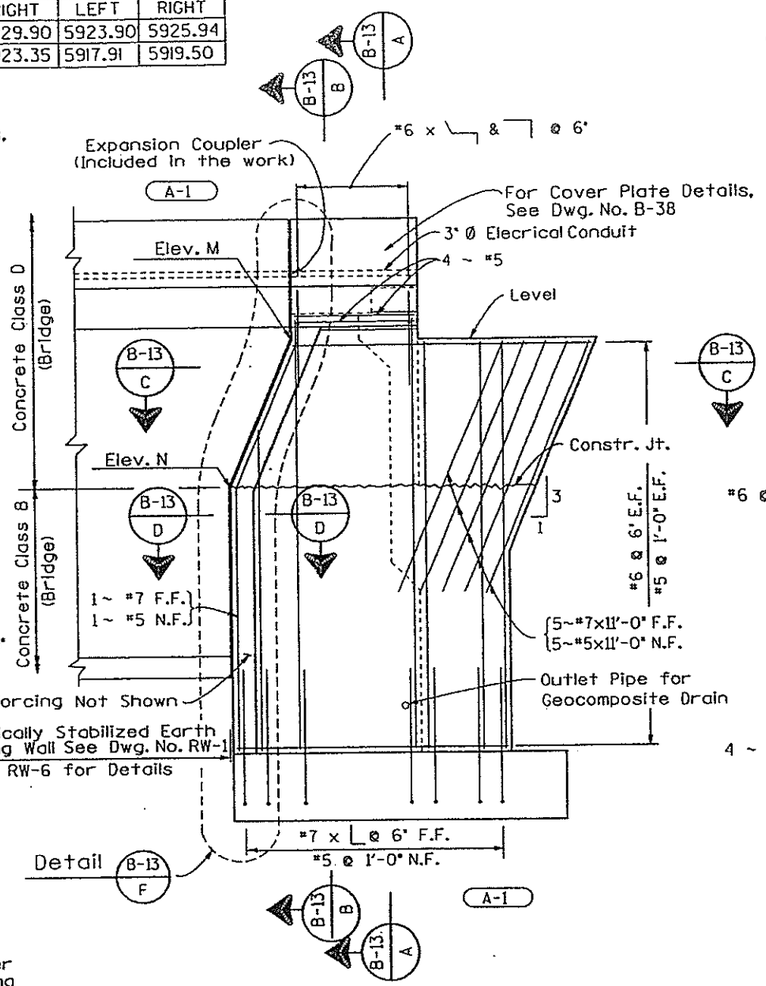

TYPICAL ELEVATION

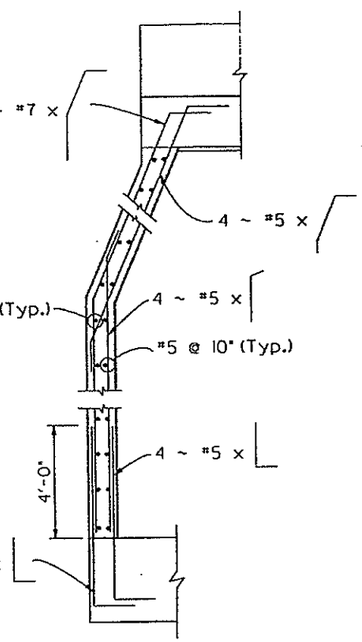

DETAIL B-13 F

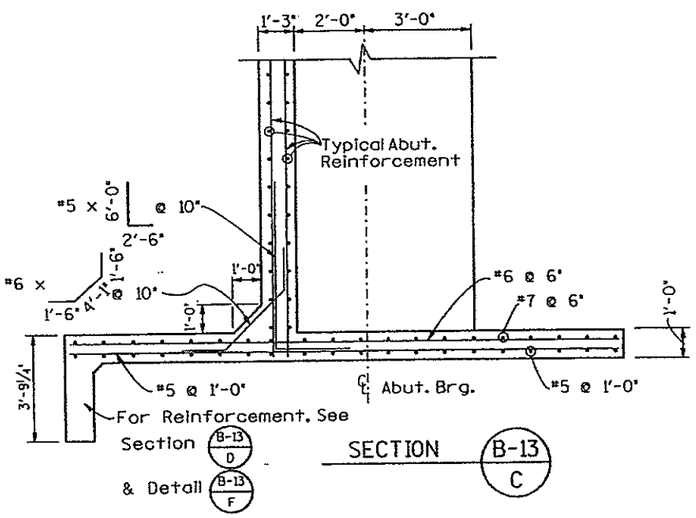

SECTION B-13 C

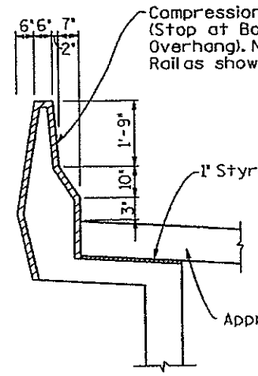

VIEW AT END OF WING

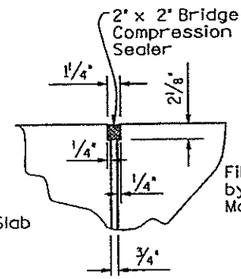

SECTION B-13 E

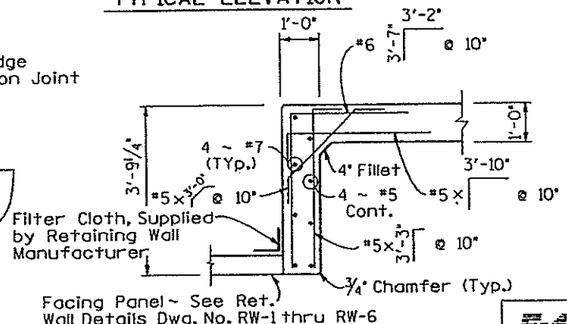

SECTION B-13 D

E-470
Engineer 470 Partnership

DIVISION OF HIGHWAYS

WINGWALL DETAILS

RAMP F

Designer	L. Creager	Structure Numbers	F-17-JX
Detailer	D. Kurschinski		
Drawing Number	B-13 of 52 Drawings		

Revision Dates (Preliminary Stage Only)

30-MAR-1990 11:07
/usr/dcoo/e470/roms1/sfwwl0ll4.90K
UDA2:[200,32]SFWWL0ll4.90K

STATE OF COLORADO
DEPARTMENT OF HIGHWAYS
DIVISION OF HIGHWAYS
STD. PLAN FORM NO. 126
REV. FEB. 1984

AS CONSTRUCTED		
NO REVISIONS ☐	REVISED ☐	VOID ☐

FED. ROAD REGION	DIVISION	PROJ. NO.	SHEET NO.	SHEET TOTALS
VIII	COLORADO	IA06/1882	169	

REVISIONS		

INITIAL	DATE	DESIGNED BY	M.R.M.	I-90
		CHECKED BY	D.K.B.	3-90
		QUANTITIES BY	L.R.C.	3-90
		CHECKED BY	L.Y.	3-90
M.R.M.	1-90	DETAILED BY	D.L.K.	1-90
D.K.B.	3-90			
D.L.K.	1-90			

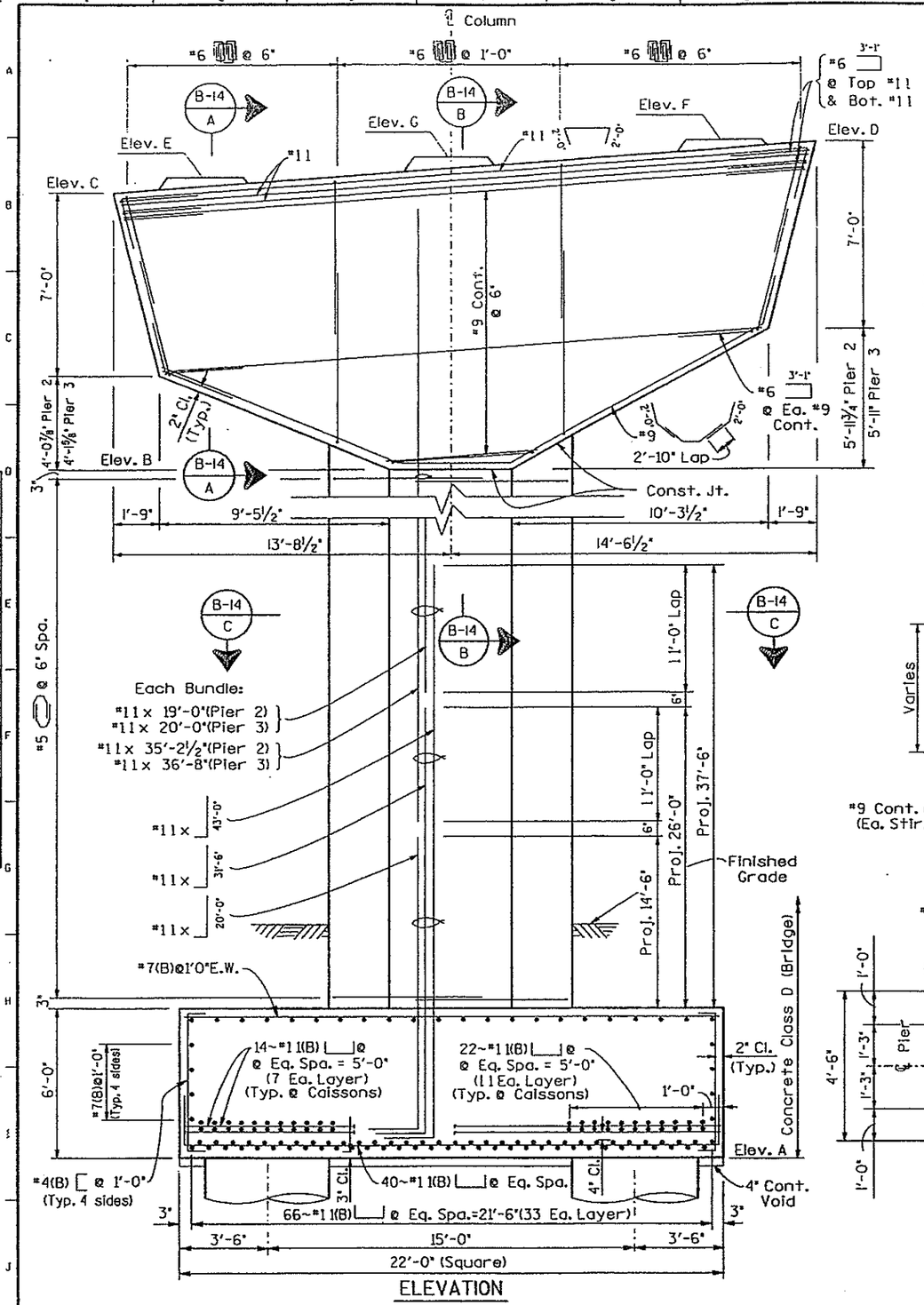

ELEVATION

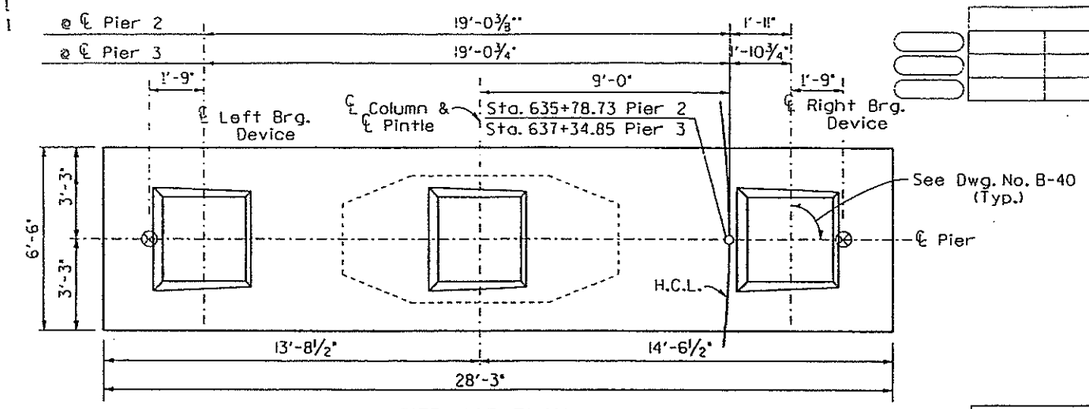

PIER CAP PLAN

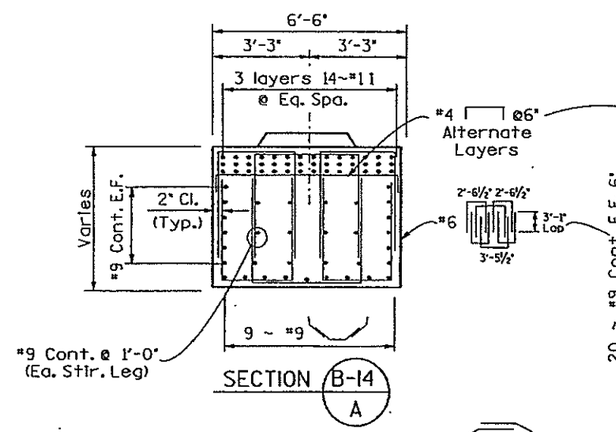

SECTION B-14 A

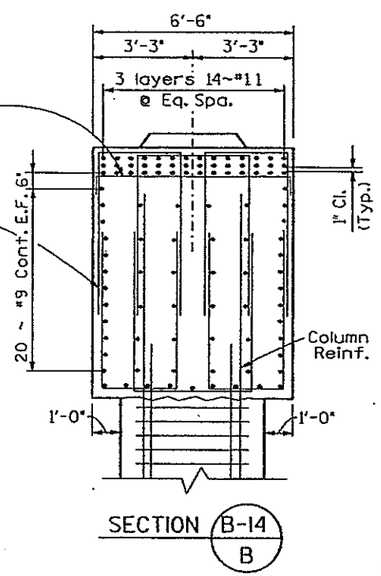

SECTION B-14 B

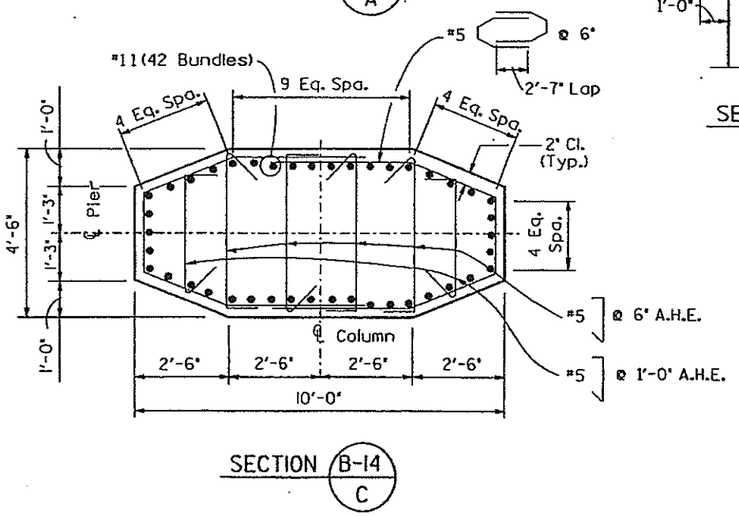

SECTION B-14 C

PIER ELEVATIONS		
	PIER 2	PIER 3
ELEV. A	5868.00	5870.00
ELEV. B	5913.71	5917.16
ELEV. C	5924.78	5928.30
ELEV. D	5926.69	5930.08
ELEV. E	5925.30	5928.77
ELEV. F	5926.71	5930.09
ELEV. G	5926.07	5929.46

NOTES:

1. The Contractor may propose Mechanical Splices for the column Reinforcement. Information shall be submitted to the Engineer for Approval.
2. A.H.E. = Alternate Hook End
3. Bearing Seat Reinforcement is Detailed on Dwg. No. B-41.
4. Jacking locations for bearing device replacement are indicated: ⊗
5. Space Reinforcement to avoid Pintle and Bearing Device Anchor Bolts.
6. For Pintle Details, See Dwg. No. B-30.
7. For Bearing Device Details, See Dwg. No. B-40 and B-41.
8. For Bridge Drain Details, See Dwg. No. B-42 and B-43.

DIVISION OF HIGHWAYS

PIER 2 AND PIER 3 DETAILS

RAMP F

Designer	M. Merklinger	Structure Numbers	F-17-JX
Detailer	D. Kurschinski		
Drawing Number	B-14	of	52 Drawings

E-470
Engineer 470 Partnership

UDA2:[200,32]SFPRD0114.90M

Revision Dates (Preliminary Stage Only)

STATE OF COLORADO
STATE DEPARTMENT OF HIGHWAYS
DIVISION OF HIGHWAYS
D. H. FORM NO. 126
REV. FEB. 1984

152

AS CONSTRUCTED	FED. ROAD REGION	DIVISION	PROJ. NO.	SHEET NO.	SHEET TOTALS
NO REVISIONS ☐ REVISED ☐ VOID ☐	VIII	COLORADO	IAOG/1802	170	

REVISIONS			
A-1	4-2-90	Reinf. Above Caissons	M.R.M.

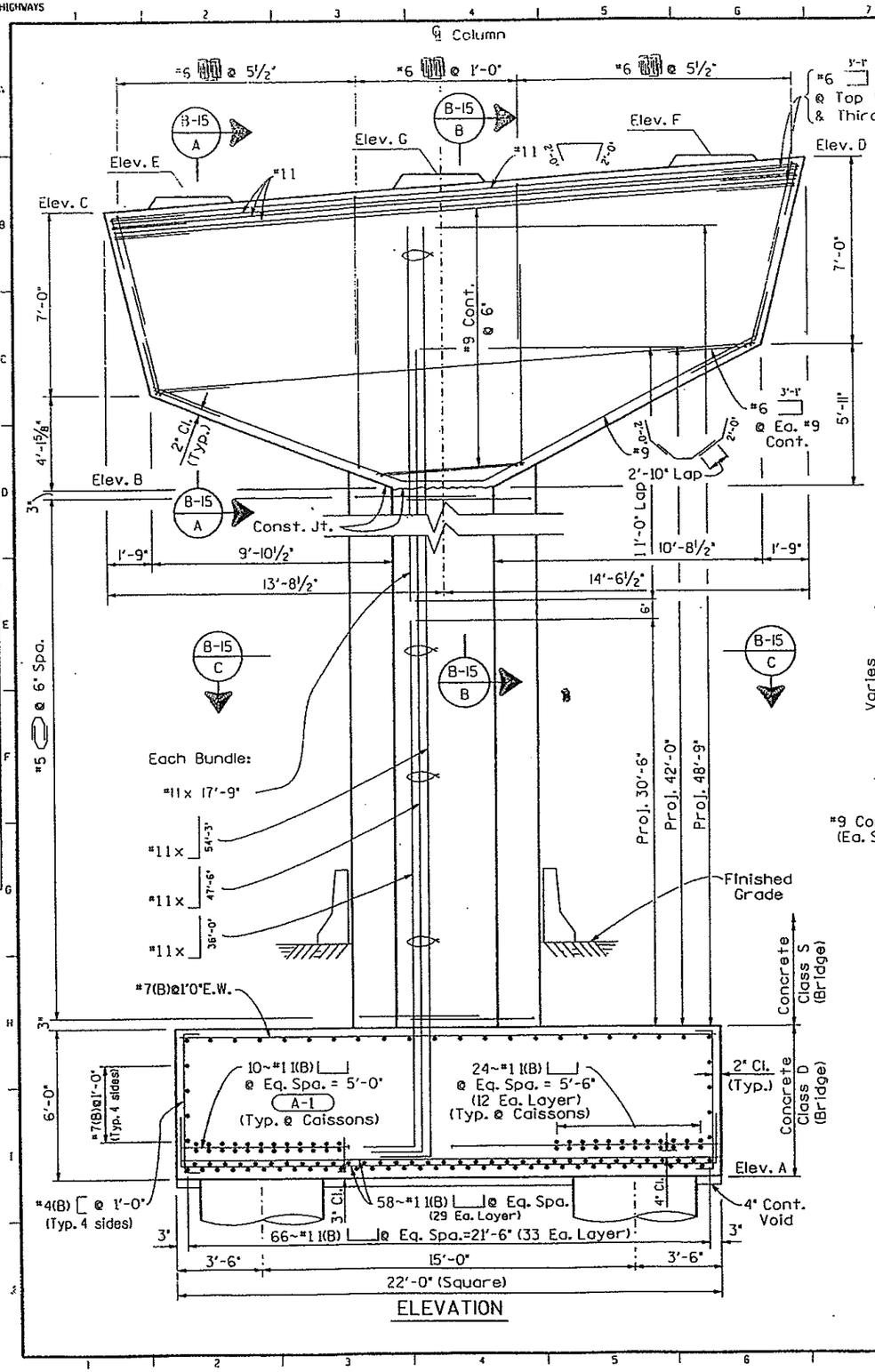

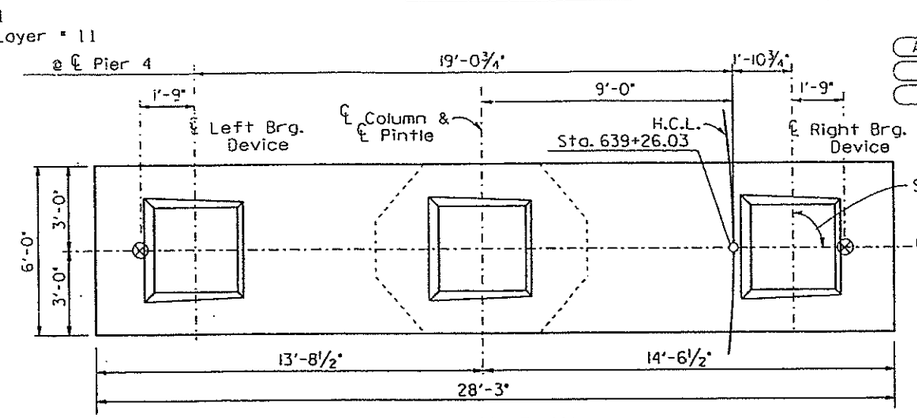

PIER CAP PLAN

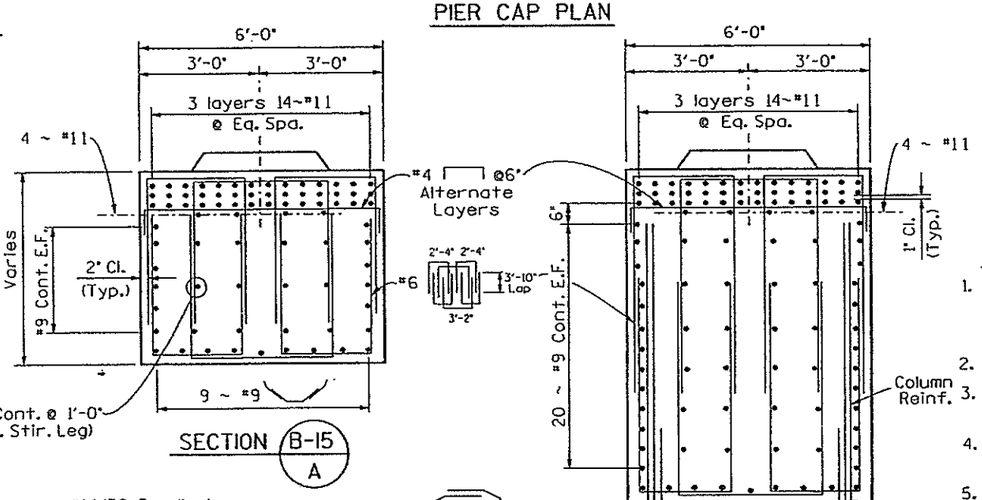

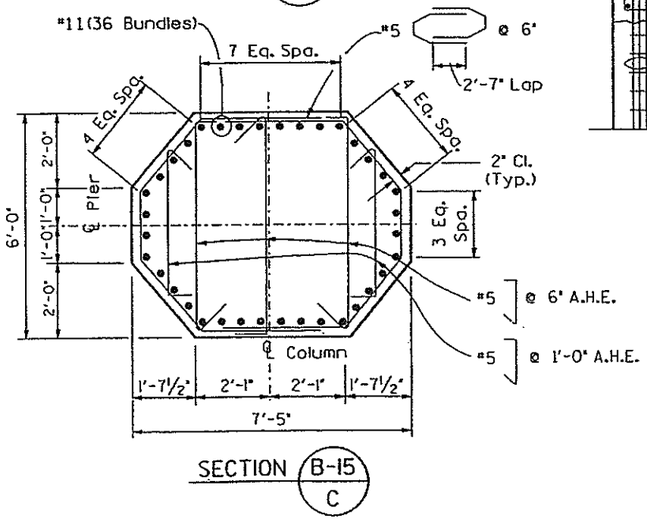

PIER ELEVATIONS	
	PIER 4
ELEV. A	5875.00
ELEV. B	5919.25
ELEV. C	5930.39
ELEV. D	5932.17
ELEV. E	5930.86
ELEV. F	5932.18
ELEV. G	5931.57

NOTES:

1. The Contractor may propose Mechanical Splices for the column Reinforcement. Information shall be submitted to the Engineer for Approval.
2. A.H.E. = Alternate Hook End
3. Bearing Seat Reinforcement is Detailed on Dwg. No. B-41.
4. Jacking locations for bearing device replacement are indicated: ⊗
5. Space Reinforcement to avoid Pintle and Bearing Device Anchor Bolts.
6. For Pintle Details, See Dwg. No. B-30.
7. For Bearing Device Details, See Dwg. No. B-40 and B-41.
8. For Bridge Drain Details, See Dwg. No. B-43.

INITIAL	DATE	CHECKED BY		DESIGNED BY	M.R.M.	1-90	M.R.M.	3-90	M.R.M.	3-90
M.R.M.	1-90	D.K.B.	3-90	CHECKED BY	D.K.B.	3-90	L.R.C.	3-90	L.V.	3-90
D.L.K.	1-90	QUANTITIES BY		DETAILED BY	D.L.K.	1-90	CHECKED BY			

DIVISION OF HIGHWAYS

PIER 4 DETAILS

RAMP F

E-470 Engineer 470 Partnership

Designer	M. Merkilinger	Structure Numbers	F-17-JX
Detailer	D. Kurschinski		
Drawing Number	B-15 of 52 Drawings		

Revision Dates				(Preliminary Stage Only)

28-MAR-1990 15:57 ..... DGN:SPEC .....
UDA2:[200,321]SFPRD0314.90M

STATE OF COLORADO
STATE DEPARTMENT OF HIGHWAYS
DIVISION OF HIGHWAYS
D. H. FORM NO. 126
REV. FEB. 1984

AS CONSTRUCTED
NO REVISIONS ☐ REVISED ☐ VOID ☐

FED. ROAD REGION	DIVISION	PROJ. NO.	SHEET NO.	SHEET TOTALS
VIII	COLORADO	IA06-1B#2	171	

REVISIONS			

INITIAL	DATE
DESIGNED BY M.R.M.	1-90
CHECKED BY D.K.B.	3-90
QUANTITIES BY L.A.C.	3-90
CHECKED BY LV	3-90
DETAILED BY D.L.K.	1-90
CHECKED	1-90

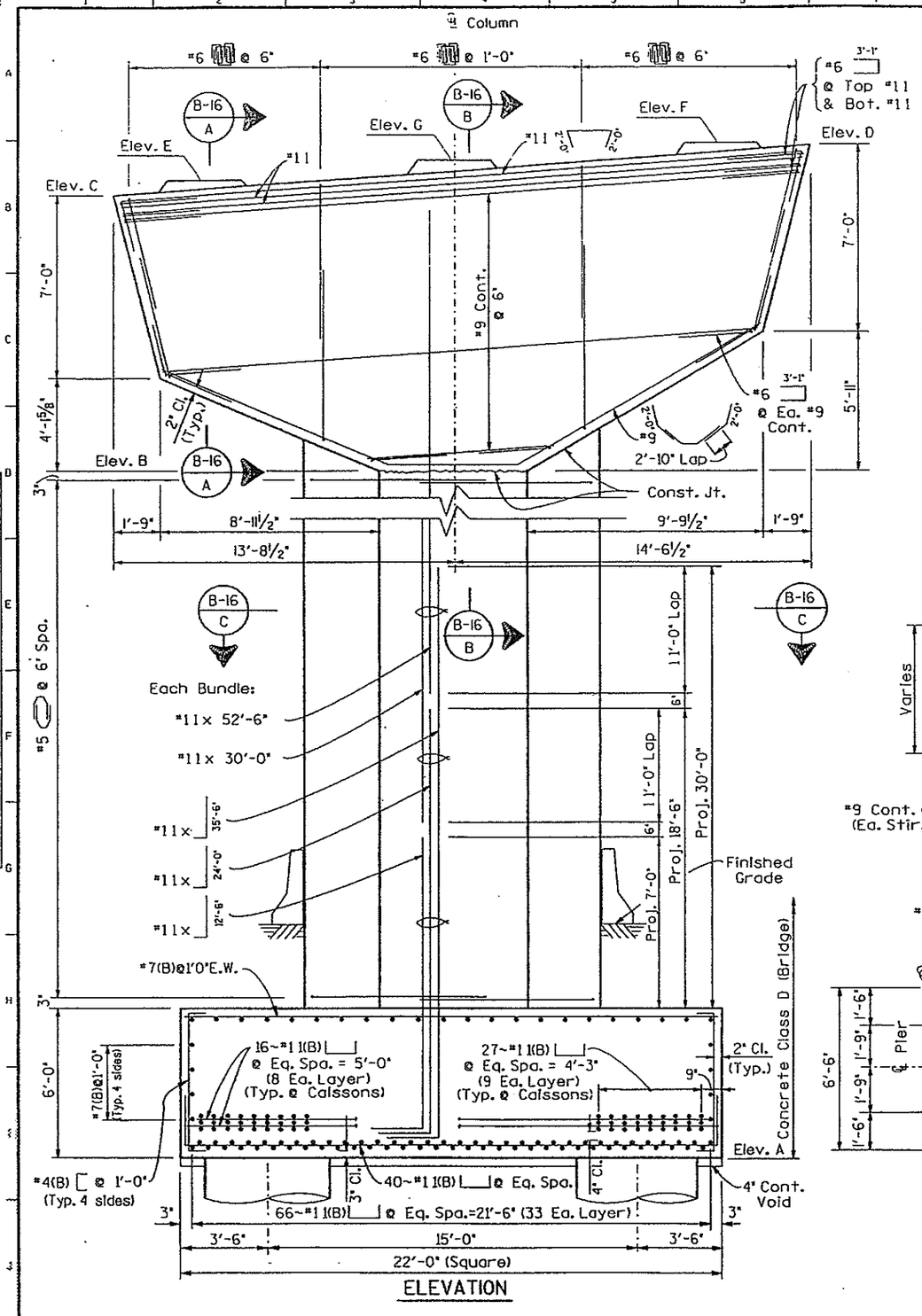

ELEVATION

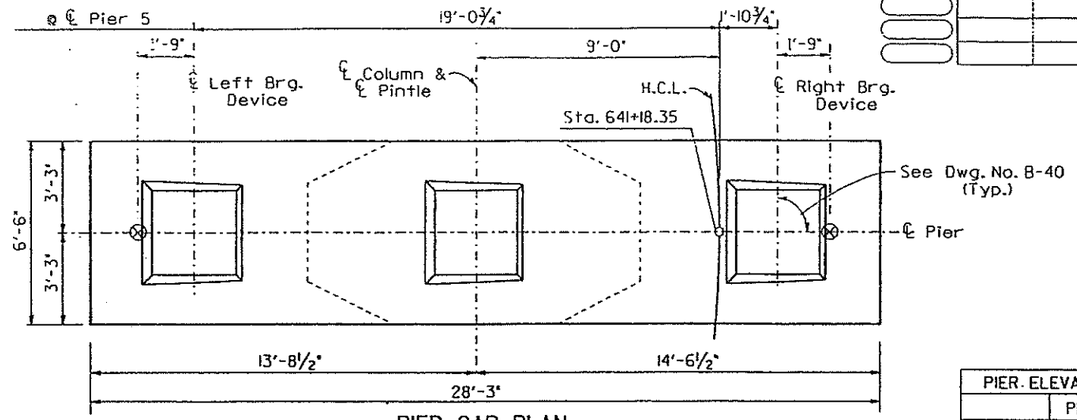

PIER CAP PLAN

PIER ELEVATIONS	
	PIER 5
ELEV. A	5852.00
ELEV. B	5919.06
ELEV. C	5930.20
ELEV. D	5931.98
ELEV. E	5930.67
ELEV. F	5931.99
ELEV. G	5931.37

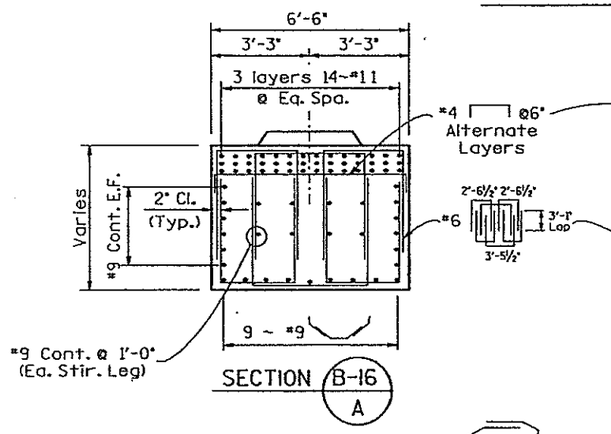

SECTION B-16 A

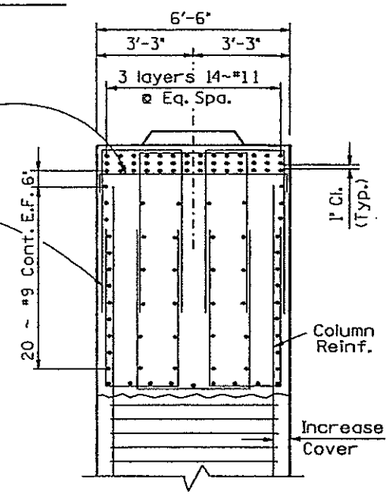

SECTION B-16 B

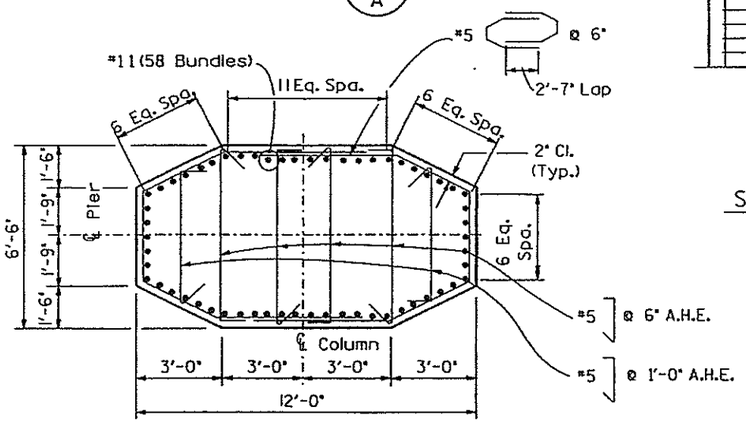

SECTION B-16 C

NOTES:

1. The Contractor may propose Mechanical Splices for the column Reinforcement. Information shall be submitted to the Engineer for Approval.
2. A.H.E. = Alternate Hook End
3. Bearing Seat Reinforcement is Detailed on Dwg. No. B-41.
4. Jacking locations for bearing device replacement are indicated: ⊗
5. Space Reinforcement to avoid Pintle and Bearing Device Anchor Bolts.
6. For Pintle Details, See Dwg. No. B-30.
7. For Bearing Device Details, See Dwg. No. B-40 and B-41.
8. For Bridge Drain Details, See Dwg. No. B-43.

DIVISION OF HIGHWAYS

PIER 5 DETAILS

RAMP F

Designer	M. Merklinger	Structure Numbers	F-17-JX
Detailer	D. Kurschinski		
Drawing Number	B-16 of 52 Drawings		

E-470
Engineer 470 Partnership

UDA2:[200,32]SFPRD0414.90M

Revision Dates (Preliminary Stage Only)

STATE OF COLORADO
STATE DEPARTMENT OF HIGHWAYS
DIVISION OF HIGHWAYS:
D.O.H. FORM NO. 126:
REV. FEB. 1984

AS CONSTRUCTED
NO REVISIONS ☐ REVISED ☐ VOID ☐

FED. ROAD REGION	DIVISION	PROJ. NO.	SHEET NO.	SHEET TOTALS
VIII	COLORADO	IA06/IB02	172	

153

REVISIONS			
A-1	4-2-90	Bottom Concrete Cover	M.R.M.

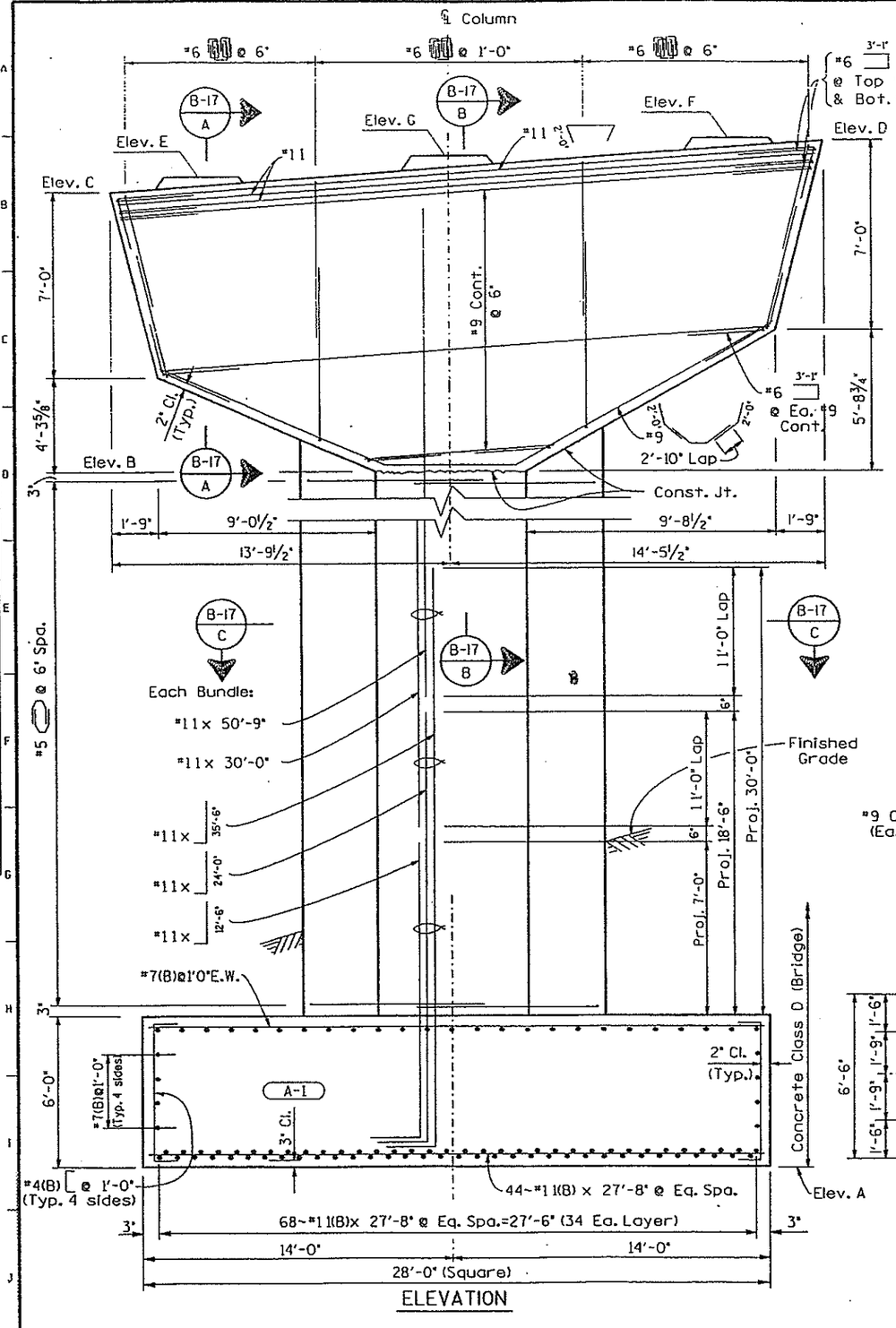

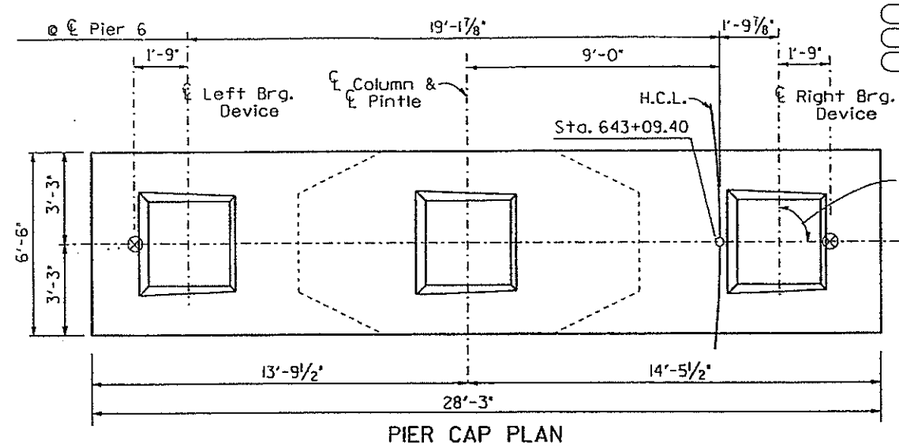

PIER CAP PLAN

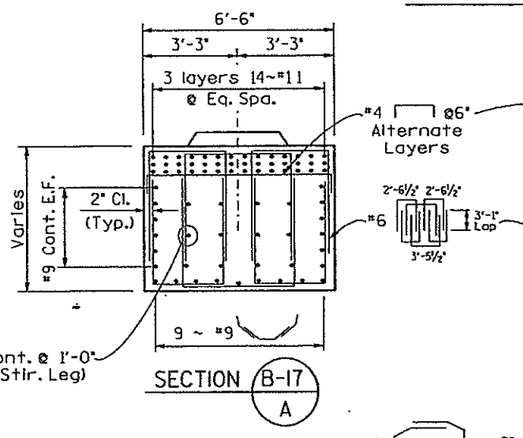

SECTION B-17 A

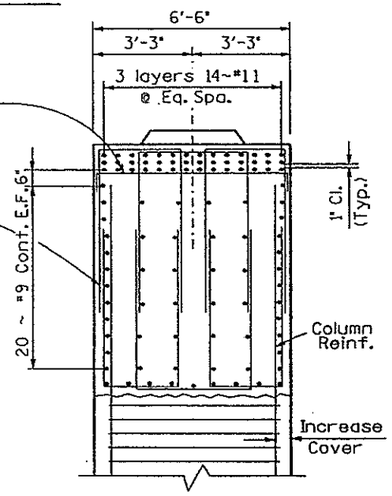

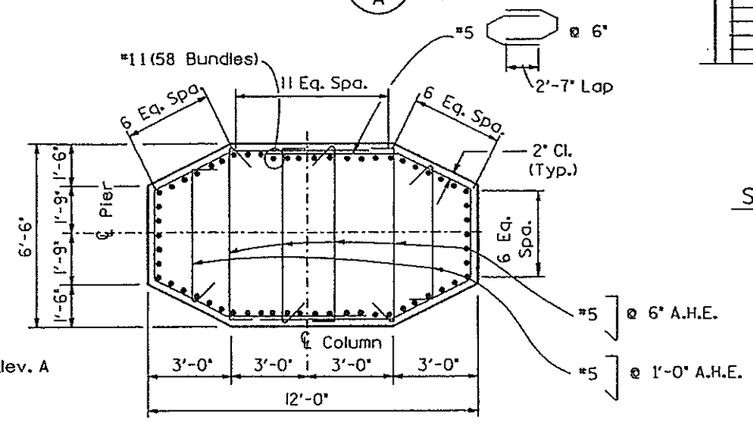

SECTION B-17 C

SECTION B-17 B

PIER ELEVATIONS	
	PIER 6
ELEV. A	5851.50
ELEV. B	5916.71
ELEV. C	5928.01
ELEV. D	5929.44
ELEV. E	5928.43
ELEV. F	5929.49
ELEV. G	5929.02

NOTES:

1. The Contractor may propose Mechanicc Splices for the column Reinforcement. Information shall be submitted to the Engineer for Approval.
2. A.H.E. = Alternate Hook End
3. Bearing Seat Reinforcement is Detailec on Dwg. No. B-41.
4. Jacking locations for bearing device replacement are indicated: ⊗
5. Space Reinforcement to avoid Pintle anc Bearing Device Anchor Bolts.
6. For Pintle Details, See Dwg. No. B-30.
7. For Bearing Device Details, See Dwg. No. B-40 and B-41.
8. For Bridge Drain Details, See Dwg. No. B-43.

	DATE	CHECKED BY	
INITIAL		M.R.M.	L.Y.
DESIGNED BY	I-90	D.K.B.	3-90
CHECKED BY	3-90	QUANTITIES BY	L.R.C.
DETAILED BY	I-90	CHECKED BY	3-90
		D.L.K.	3-90

DIVISION OF HIGHWAYS

PIER 6 DETAILS

RAMP F

E-470 Engineer 470 Partnership

Designer	M. Merklinger	Structure Numbers	F-17-JX
Detailer	D. Kurschinski		
Drawing Number	B-17 of 52 Drawings		

Revision Dates (Preliminary Stage Only)

28-MAR-1990 16:05
/usr/dcco/a410/ramp1/sfpr005l4.90m
UDA2:[200,32]SFPR005I4.90M

STATE OF COLORADO
STATE DEPARTMENT OF HIGHWAYS
DIVISION OF HIGHWAYS
H. D. H. FORM NO. 126
REV. FEB. 1984

AS CONSTRUCTED			
NO REVISIONS ☐	REVISED ☐	VOID ☐	

FED. ROAD REGION	DIVISION	PROJ. NO.	SHEET NO.	SHEET TOTALS
VIII	COLORADO	IA06/IB62	173	

REVISIONS		

	DATE	CHECKED BY	QUANTITIES BY	CHECKED BY
INITIAL	1-90	M.R.M.	L.A.C.	L.V.
DESIGNED BY	3-90	D.K.S.		
CHECKED BY	3-90			
DETAILED BY	1-90	D.L.K.		

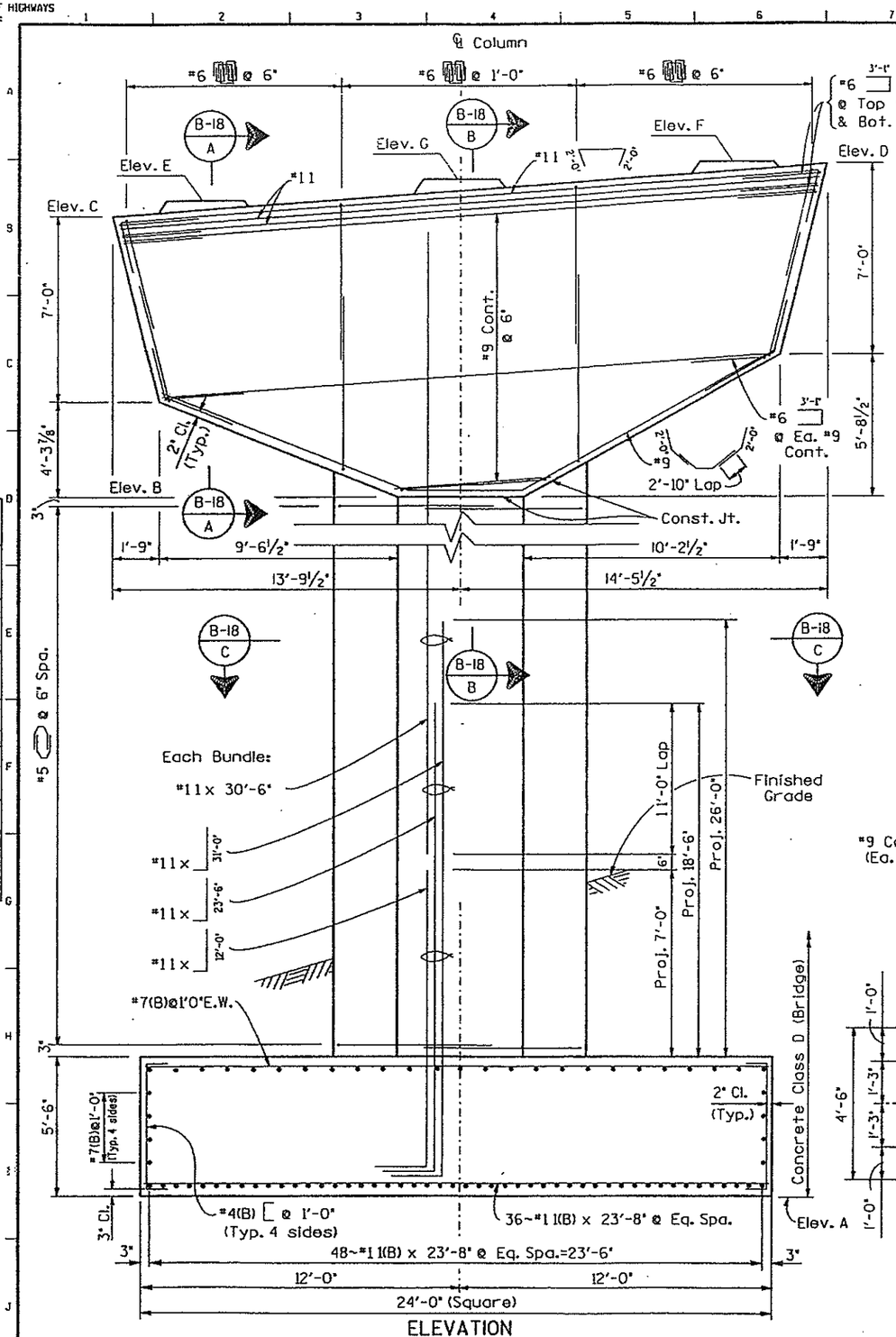

ELEVATION

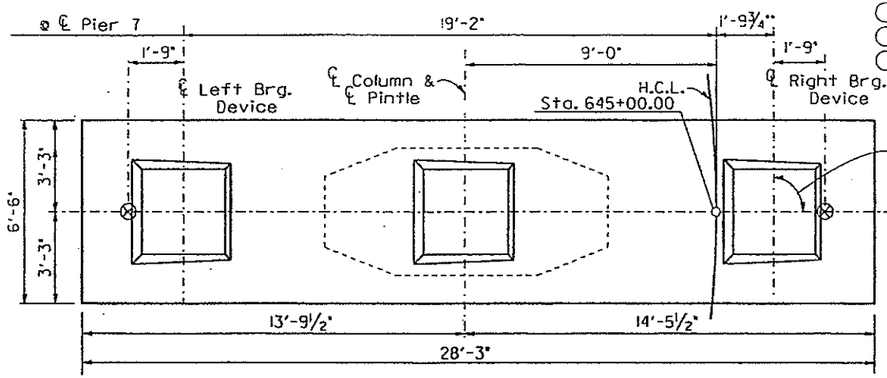

PIER CAP PLAN

PIER ELEVATIONS	
	PIER 7
ELEV. A	5879.00
ELEV. B	5911.98
ELEV. C	5923.30
ELEV. D	5924.69
ELEV. E	5923.72
ELEV. F	5924.75
ELEV. G	5924.33

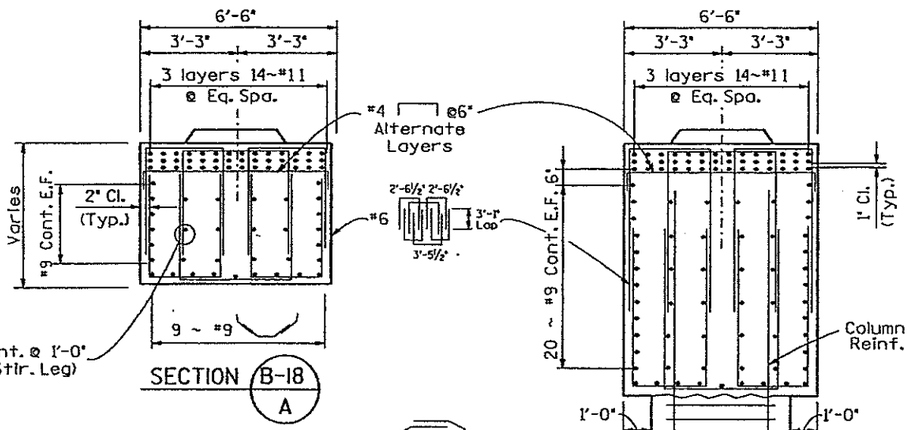

SECTION B-18 A

SECTION B-18 B

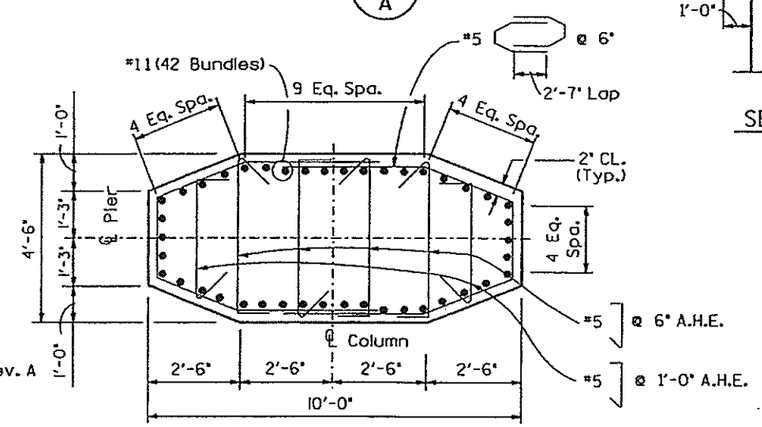

SECTION B-18 C

NOTES:

1. The Contractor may propose Mechanical Splices for the column Reinforcement. Information shall be submitted to the Engineer for Approval.
2. A.H.E. = Alternate Hook End
3. Bearing Seat Reinforcement is Detailed on Dwg. No. B-41.
4. Jacking locations for bearing device replacement are indicated: ⊗
5. Space Reinforcement to avoid Pintle and Bearing Device Anchor Bolts.
6. For Pintle Details, See Dwg. No. B-30.
7. For Bearing Device Details, See Dwg. No. B-40 and B-41.
8. For Bridge Drain Details, See Dwg. No. B-43.

DIVISION OF HIGHWAYS

PIER 7 DETAILS

RAMP F

E-470
Engineer 470 Partnership

Designer	M. Merklinger	Structure Numbers	F-17-JX
Detailer	D. Kurschinski		

Drawing Number B-18 of 52 Drawings

Revision Dates						(Preliminary Stage Only)

UDA2:[200,32]SFPR00214.90M

STATE OF COLORADO
STATE DEPARTMENT OF HIGHWAYS
DIVISION OF HIGHWAYS
STD. PLAN NO. 126
APPROVED FEB. 1984

AS CONSTRUCTED					
NO REVISIONS ☐	REVISED ☐	VOID ☐			

FED. ROAD REGION	DIVISION	PROJ. NO.	SHEET NO.	SHEET TOTALS
VIII	COLORADO	IA06/1862	174	

REVISIONS			

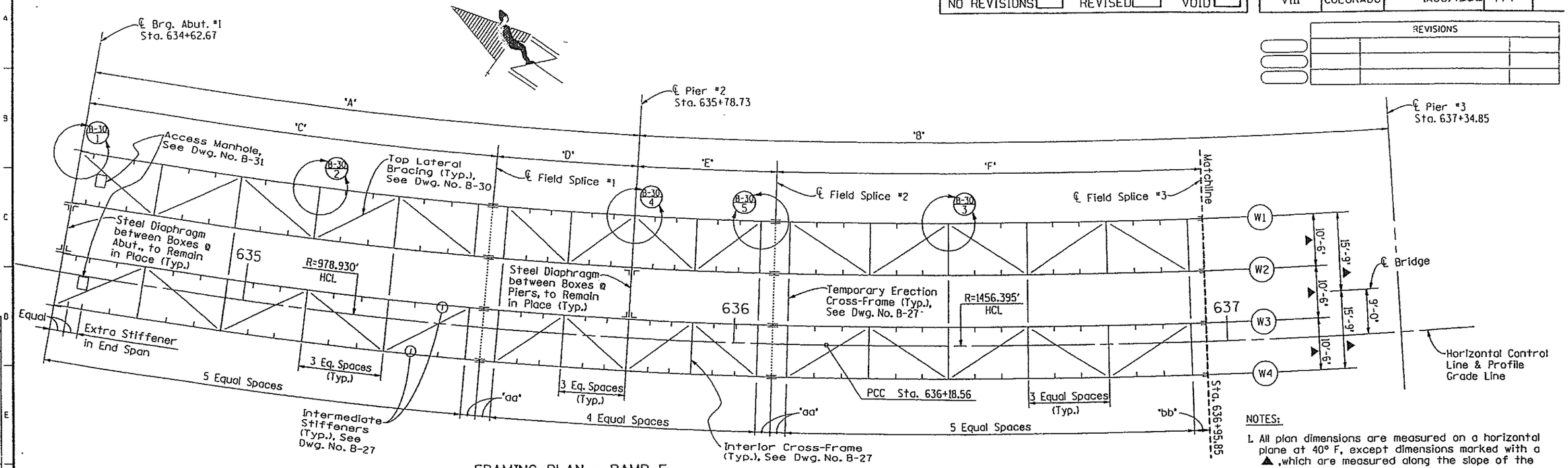

FRAMING PLAN - RAMP F
Partial Plan - Abut. #1 to Field Splice #3

Shear Connector Spacing
For Details, See Dwg. No. B-31

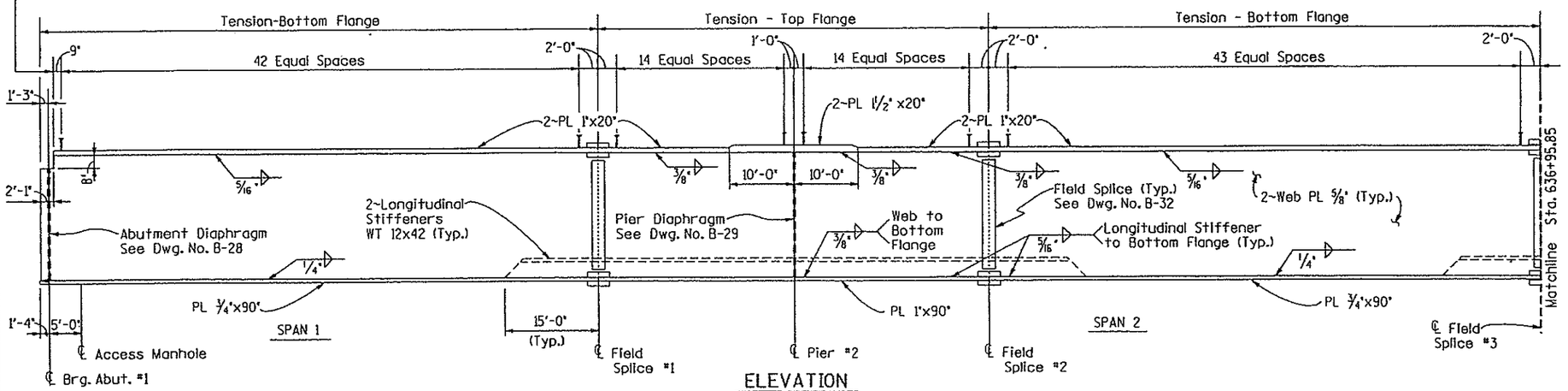

ELEVATION

GIRDER DIMENSION SCHEDULE

DIMENSION	'A'	'B'	'C'	'D'	'E'	'F'	'aa'	'bb'
WEB #1	113'-1 9/16"	153'-1 11/16"	84'-10 3/8"	28'-3 3/16"	28'- 3 3/16"	86'-6 7/16"	3'-0"	3'-0"
WEB #2	114'-4 7/16"	154'-4 7/8"	85'-9 1/2"	28'-6 5/16"	28'-6 5/16"	87'-2 1/2"	3'-0 3/8"	3'-0 1/4"
WEB #3	115'-7 3/8"	155'-8"	86'-8 11/16"	28'-10 11/16"	28'-10 11/16"	87'-10 9/16"	3'-0 13/16"	3'-0 1/2"
HCL & PGL	116'-0 3/4"	156'-1 7/16"	87'-0 3/4"	29'-0"	29'-0"	88'-1 7/16"	3'-0 15/16"	3'-0 5/8"
WEB #4	116'-10 1/4"	156'-11 1/8"	87'-7 7/8"	29'-2 3/8"	29'-2 3/8"	88'-6 5/8"	3'-1 3/16"	3'-0 13/16"

Note: All Dimensions are at Top Outside of Webs (Work Points).

NOTES:

1. All plan dimensions are measured on a horizontal plane at 40° F, except dimensions marked with a ▲, which are measured along the slope of the structure.
2. All webs curve to a common center with the Horizontal Control Line.
3. All stationing is measured along the Horizontal Control Line.
4. For Typical Box Girder Geometry, see Dwg. No. B-24.
5. For camber of girder webs, see Dwg. No. B-25 & B-26
6. All stiffeners and internal diaphragms are normal to girder ℄ unless noted otherwise.
7. Pier diaphragm plates are parallel to pier ℄.
8. Abutment end diaphragm plates to be vertical under dead load.
9. Provide 1½" diameter drainage holes in the bottom flange. See Miscellaneous Steel Details Dwg. No. B-31 for hole spacing and details.
10. Place the top flange symmetrically to the center line of the web.

	INITIAL	DATE
DESIGNED BY	DKB	3-90
CHECKED BY	WDA	3-90
DETAILED BY	MED	3-90
CHECKED BY	LRC	3-90
QUANTITIES BY	LV	3-90
CHECKED BY		

E-470
Engineer 470 Partnership

DIVISION OF HIGHWAYS

FRAMING PLAN & GIRDER ELEVATION
RAMP F

Designer Burroughs/Stapleton	Structure Numbers	F-17-JX
Detailer M. Davison		
Drawing Number B-19 of 52 Drawings		

Revision Dates (Preliminary Stage Only)

/usr/dc:o/u410/ramp1/sffrm0114.90q
13-MAR-1990 15:06

UDA2:[200.32]SFFRM0114.90Q

STATE OF COLORADO
STATE DEPARTMENT OF HIGHWAYS
DIVISION OF HIGHWAYS:
D. H. FORM NO. 126:
REV. FEB. 1984

AS CONSTRUCTED		
NO REVISIONS ☐	REVISED ☐	VOID ☐

FED. ROAD REGION	DIVISION	PROJ. NO.	SHEET NO.	SHEET TOTALS
VIII	COLORADO	IA06/1B02	175	

REVISIONS

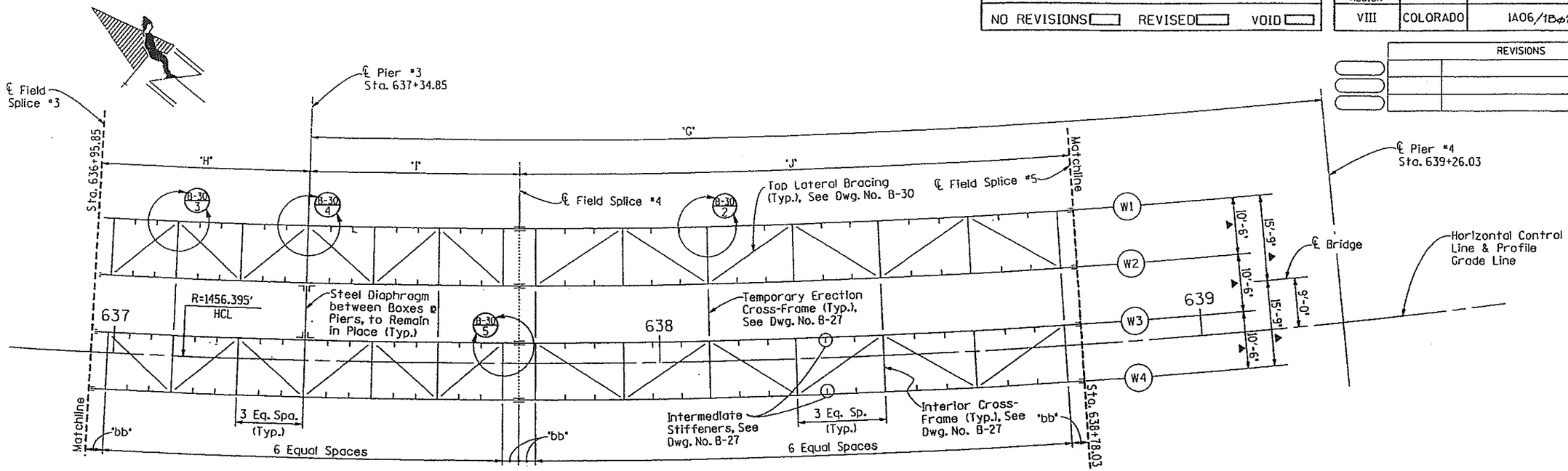

FRAMING PLAN - RAMP F
Partial Plan - Field Splice #3 to Field Splice #5

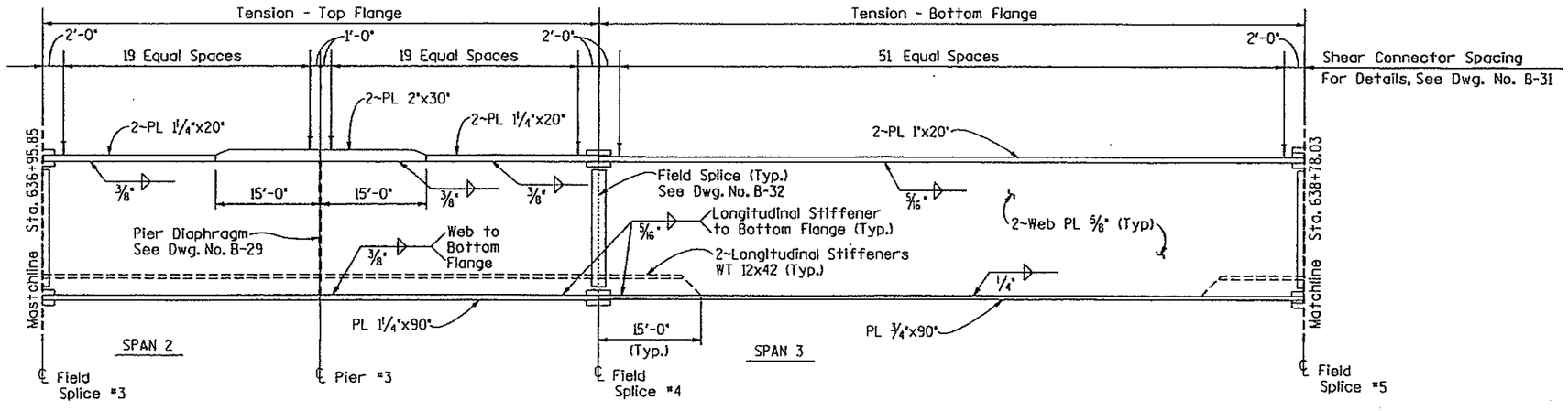

ELEVATION

FRAMING PLAN NOTES:
See Drawing No. B-19.

GIRDER DIMENSION SCHEDULE

DIMENSION	"G"	"H"	"I"	"J"	"bb"
WEB #1	187'-11¼"	38'-4 1/16"	38'-4 1/16"	102'-4 15/16"	3'-0"
WEB #2	189'-3¾"	38'-7 7/16"	38'-7 7/16"	103'-1 15/16"	3'-0¼"
WEB #3	190'-8¼"	38'-10 13/16"	38'-10 13/16"	103'-10 15/16"	3'-0½"
HCL & PGL	191'-2 3/16"	39'-0"	39'-0"	104'-2 3/16"	3'-0⅝"
WEB #4	192'-0¾"	39'-2 3/16"	39'-2 3/16"	104'-7 15/16"	3'-0 13/16"

Note: All Dimensions are at Top Outside of Webs (Work Points).

INITIAL	DATE	CHECKED BY	DATE
DESIGNED BY DKB	3-90	DKB	3-90
CHECKED BY WDA	3-90	QUANTITIES BY LRC	3-90
DETAILED BY MED	3-90	CHECKED BY LV	3-90

DIVISION OF HIGHWAYS

FRAMING PLAN & GIRDER ELEVATION
RAMP F

E-470
Engineer 470 Partnership

Designer Burroughs/Stapleton | Structure Numbers F-17-JX
Detailer M. Davison
Drawing Number B-20 of 52 Drawings

Revision Dates (Preliminary Stage Only)

UDA2:[200,32]SFFRM0214.90Q

/usr/dcco/e470/rampf1/sffrm0214.90q
13-MAR-1990 15:14

STATE OF COLORADO
STATE DEPARTMENT OF HIGHWAYS
DIVISION OF HIGHWAYS
F.H. FORM NO. 1282
REV. FEB. 1984

HIGHWAYS

AS CONSTRUCTED

NO REVISIONS ☐ REVISED ☐ VOID ☐

FED. ROAD REGION	DIVISION	PROJ. NO.	SHEET NO.	SHEET TOTAL
VIII	COLORADO	IA06/1862	176	

REVISIONS		

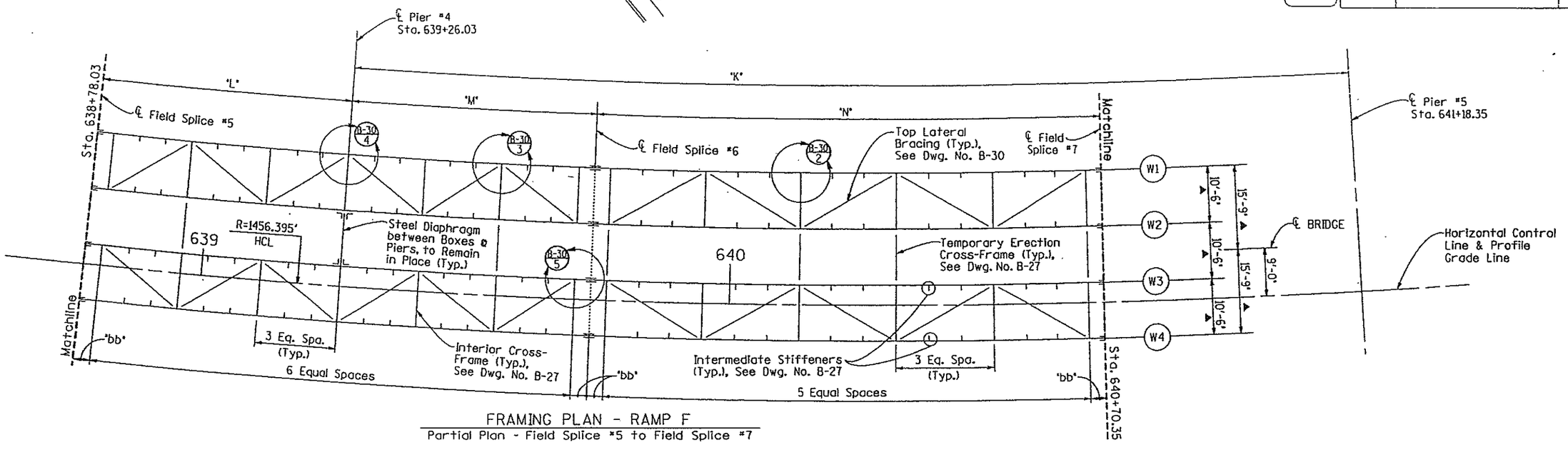

FRAMING PLAN - RAMP F
Partial Plan - Field Splice #5 to Field Splice #7

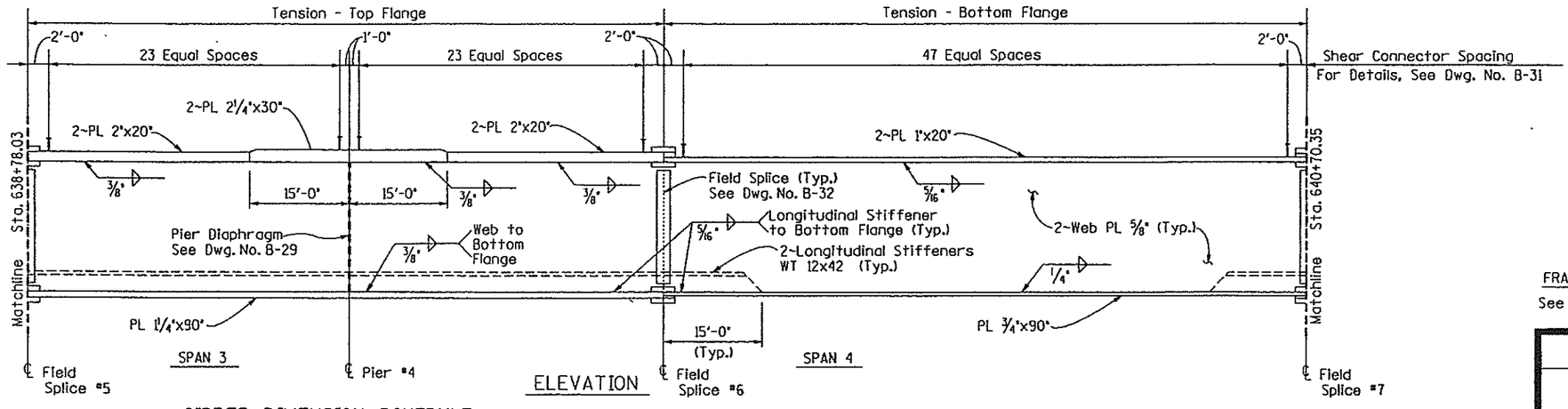

ELEVATION

GIRDER DIMENSION SCHEDULE

DIMENSION	"K"	"L"	"M"	"N"	"bb"
WEB #1	189'-0 11/16"	47'-2 1/4"	47'-2 1/4"	94'-8 1/4"	3'-0"
WEB #2	190'-5 1/4"	47'-6 3/8"	47'-6 3/8"	95'-4 13/16"	3'-0 1/4"
WEB #3	191'-9 7/8"	47'-10 1/2"	47'-10 1/2"	96'-0 7/8"	3'-0 1/2"
HCL & PGL	192'-3 13/16"	48'-0"	48'-0"	96'-3 13/16"	3'-0 5/8"
WEB #4	193'-2 1/2"	48'-2 11/16"	48'-2 11/16"	96'-9 3/16"	3'-0 11/16"

Note: All Dimensions are at Top Outside of Webs (Work Points).

FRAMING PLAN NOTES:
See Drawing No. B-19.

INITIAL	DATE	
DESIGNED BY	DKB	3-90
CHECKED BY	WDA	3-90
QUANTITIES BY	LRC	3-90
CHECKED BY	LV	3-90
DETAILED BY	MED	3-90
CHECKED BY		3-90

/usr/dacs/a470/rampf/sffrm0314.90q
13-MAR-1990 15:21

UDA2:[200,32]SFFRM0314.90Q

DIVISION OF HIGHWAYS

FRAMING PLAN & GIRDER ELEVATION
RAMP F

E-470
Engineer 470 Partnership

Designer Burroughs/Stapleton	Structure Numbers	F-17-JX
Detailer M. Davison		
Drawing Number B-21 of 52 Drawings		

Revision Dates (Preliminary Stage Only)

STATE OF COLORADO
STATE DEPARTMENT OF HIGHWAYS
DIVISION OF HIGHWAYS
F.O.H. FORM NO. 126
REV. FEB. 1984

AS CONSTRUCTED			
NO REVISIONS ☐	REVISED ☐	VOID ☐	

FED. ROAD REGION	DIVISION	PROJ. NO.	SHEET NO.	SHEET TOTALS
VIII	COLORADO	1A06/1642	177	

REVISIONS		

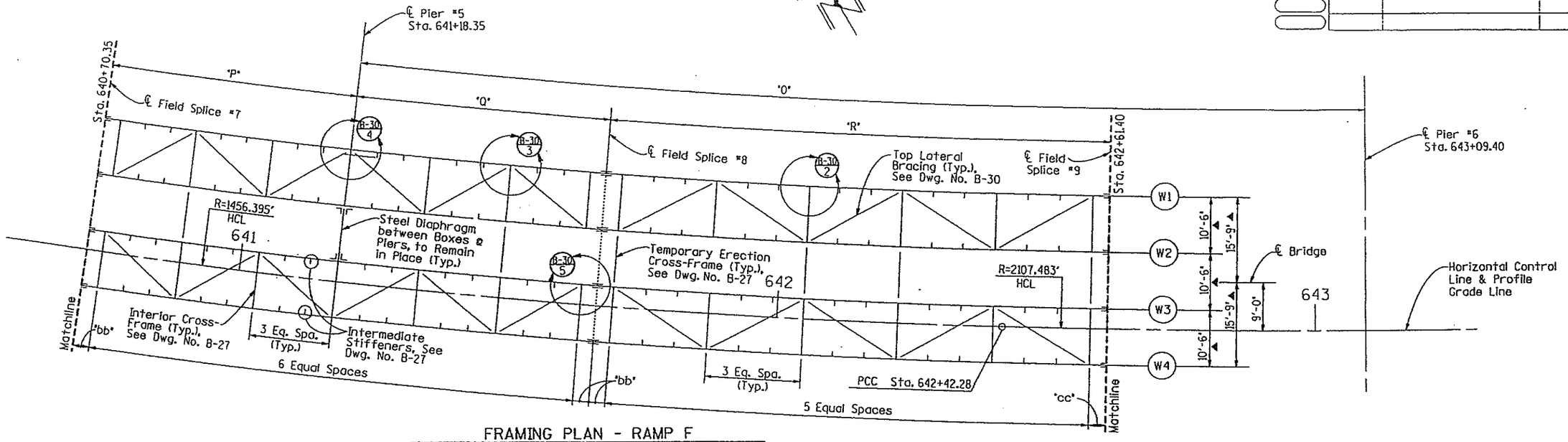

FRAMING PLAN - RAMP F
Partial Plan - Field Splice #7 to Field Splice #9

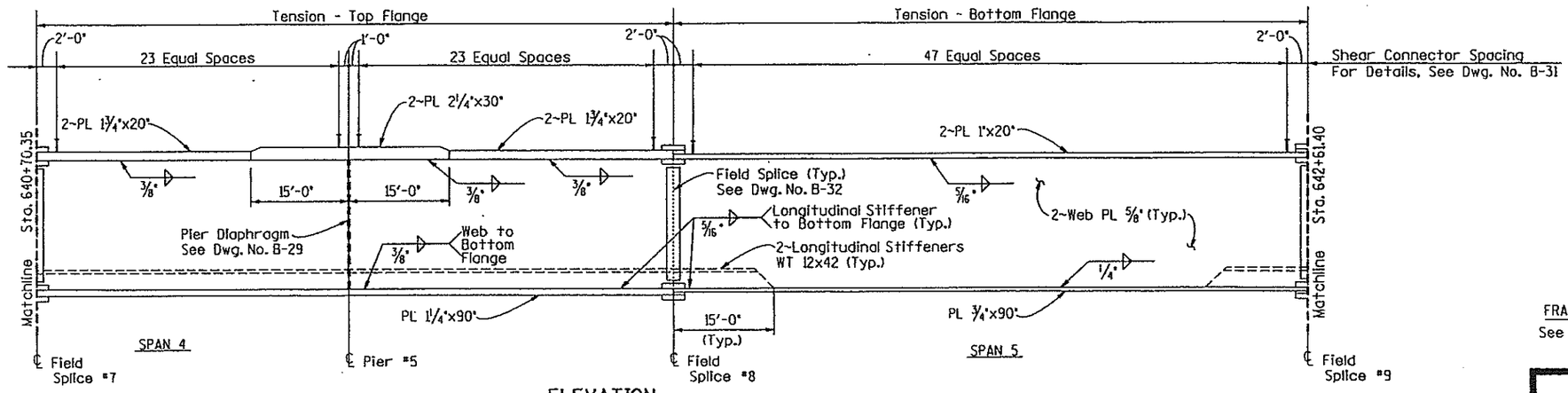

ELEVATION

GIRDER DIMENSION SCHEDULE

DIMENSION	"O"	"P"	"Q"	"R"	"bb"	"cc"
WEB #1	188'-1 15/16"	47'-2 1/4"	47'-2 1/4"	93'-6 7/16"	3'-0"	3'-0"
WEB #2	189'-4 5/8"	47'-6 3/8"	47'-6 3/8"	94'-2 1/8"	3'-0 1/4"	3'-0 3/16"
WEB #3	190'-7 5/16"	47'-10 1/2"	47'-10 1/2"	94'-9 13/16"	3'-0 1/2"	3'-0 3/8"
HCL & PGL	191'-0 5/8"	48'-0"	48'-0"	95'-0 5/8"	3'-0 5/8"	3'-0 7/16"
WEB #4	191'-10 1/16"	48'-2 11/16"	48'-2 11/16"	95'-5 5/16"	3'-0 13/16"	3'-0 9/16"

Note: All Dimensions are at Top Outside of Webs (Work Points).

FRAMING PLAN NOTES:
See Drawing No. B-19.

	INITIAL	DATE
DESIGNED BY	OKB	3/90
CHECKED BY	WDA	3-90
QUANTITIES BY	LRC	3-90
CHECKED BY	LV	3-90
DETAILED BY	MED	3/90
CHECKED BY	DKB	3-90

E-470
Engineer 470 Partnership

DIVISION OF HIGHWAYS

FRAMING PLAN & GIRDER ELEVATION
RAMP F

Designer Burroughs/Stapleton		Structure Numbers	F-17-JX
Detailer M. Davison			
Drawing Number B-22 of 52 Drawings			

Revision Dates (Preliminary Stage Only)

/usr/dcca/e470/ramp f/sffrm0414.900
15-MAR-1990 15:27

UDA2:[200,32]SFFRM0414.900

STATE OF COLORADO
STATE DEPARTMENT OF HIGHWAYS
DIVISION OF HIGHWAYS
STD. M. FORM NO. 126
REV. FEB. 1984

AS CONSTRUCTED			
NO REVISIONS ☐	REVISED ☐	VOID ☐	

FED. ROAD REGION	DIVISION	PROJ. NO.	SHEET NO.	SHEET TOTALS
VIII	COLORADO	1A06/1B62	178	

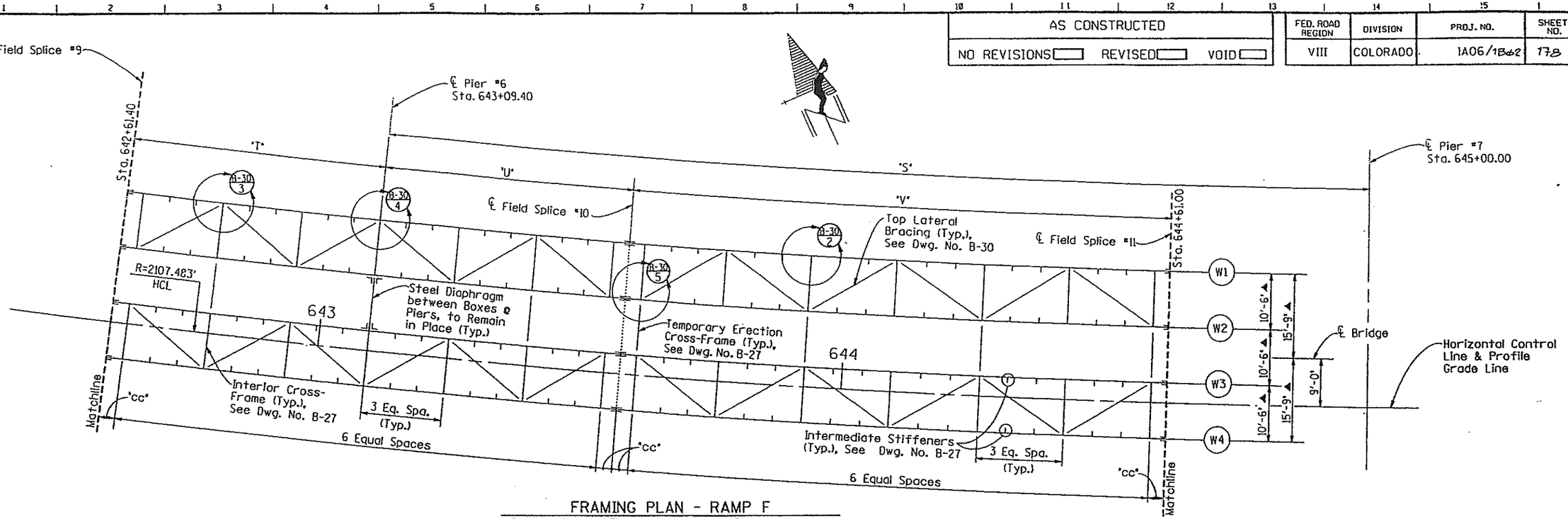

FRAMING PLAN - RAMP F

Partial Plan - Field Splice #9 to Field Splice #11

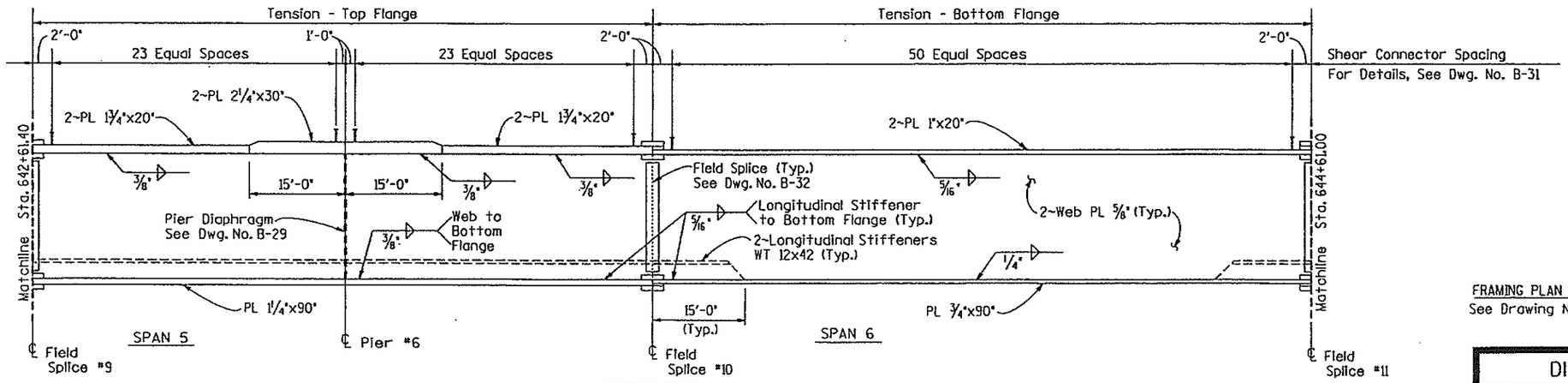

ELEVATION

GIRDER DIMENSION SCHEDULE

DIMENSION	"S"	"T"	"U"	"V"	"cc"
WEB #1	188'-4 3/8"	47'-5 1/4"	47'-5 1/4"	102'-4 5/8"	3'-0"
WEB #2	189'-3 3/4"	47'-8 1/4"	47'-8 1/4"	102'-10 13/16"	3'-0 3/16"
WEB #3	190'-3 1/8"	47'-11"	47'-11"	103'-5"	3'-0 3/8"
HCL & PGL	190'-7 3/16"	48'-0"	48'-0"	103'-7 3/16"	3'-0 7/16"
WEB #4	191'-2 1/2"	48'-1 13/16"	48'-1 13/16"	103'-11 3/16"	3'-0 9/16"

Note: All Dimensions are at Top Outside of Webs (Work Points).

FRAMING PLAN NOTES:
See Drawing No. B-19.

	INITIAL	DATE
DESIGNED BY	DKB	3-90
CHECKED BY	WDA	3-90
DETAILED BY	MED	3-90

CHECKED BY	DKB	3-90
QUANTITIES BY	LRC	3-90
CHECKED BY	LV	3-90

DIVISION OF HIGHWAYS

FRAMING PLAN & GIRDER ELEVATION
RAMP F

Designer Burroughs/Stapleton	Structure Numbers	F-17-JX
Detailer M. Davison		
Drawing Number B-23 of 52 Drawings		

E-470
Engineer 470 Partnership

Revision Dates (Preliminary Stage Only)

UDA2:[200,32]SFFRM0514.900

STATE OF COLORADO
STATE DEPARTMENT OF HIGHWAYS
DIVISION OF HIGHWAYS:
D.H. FORM NO. 126:
REV. FEB. 1984

AS CONSTRUCTED		
NO REVISIONS ☐	REVISED ☐	VOID ☐

FED. ROAD REGION	DIVISION	PROJ. NO.	SHEET NO.	SHEET TOTAL
VIII	COLORADO	1A06/1B02	179	

REVISIONS

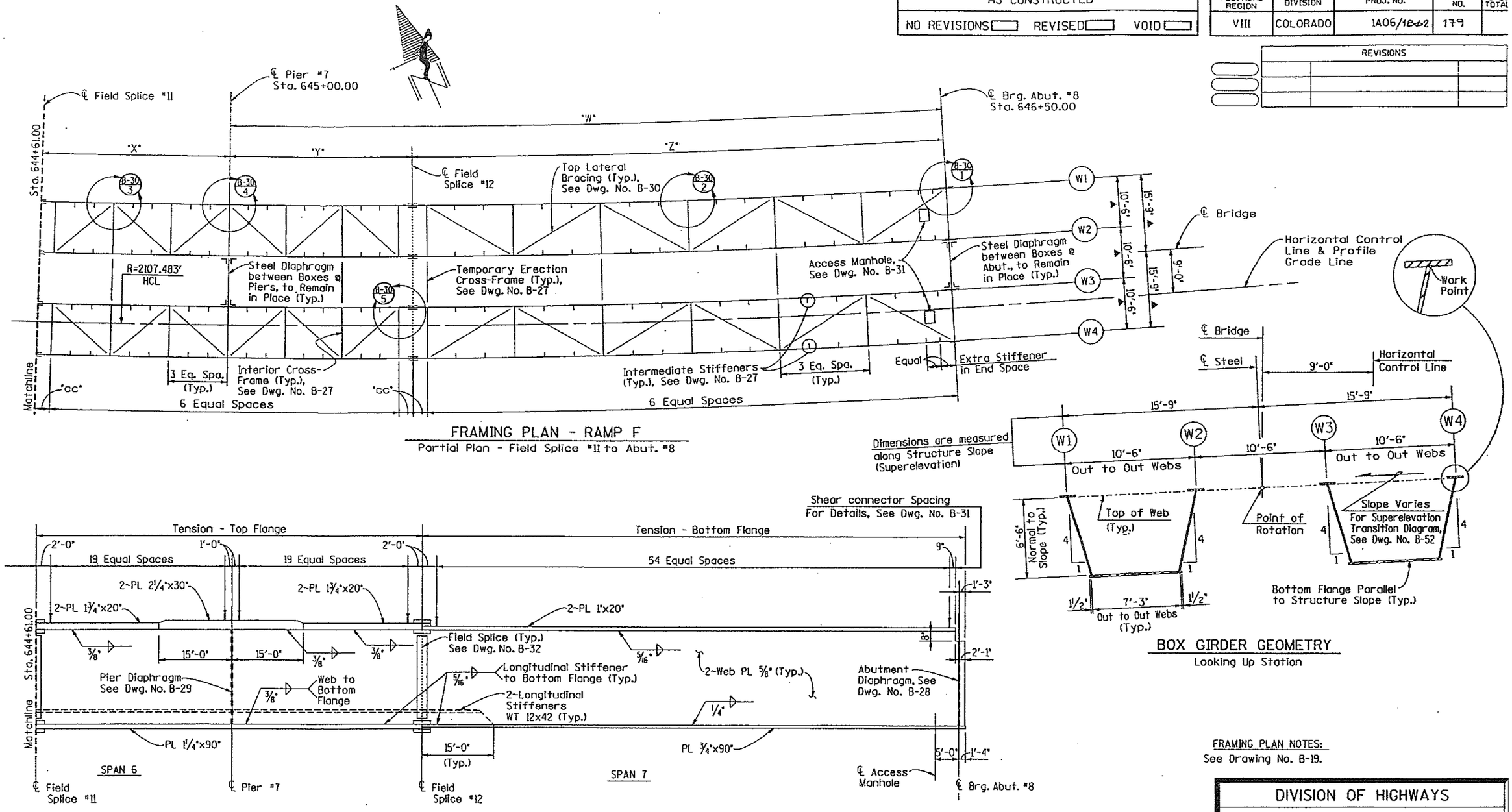

FRAMING PLAN - RAMP F

Partial Plan - Field Splice #11 to Abut. #8

BOX GIRDER GEOMETRY

Looking Up Station

ELEVATION

FRAMING PLAN NOTES:
See Drawing No. B-19.

GIRDER DIMENSION SCHEDULE

DIMENSION	"W"	"X"	"Y"	"Z"	"cc"
WEB #1	148'-2⅞"	38'-6½"	38'-6½"	109'-8⅜"	3'-0"
WEB #2	148'-11 13/16"	38'-8 13/16"	38'-8 13/16"	110'-3"	3'-0 3/16"
WEB #3	149'-8 13/16"	38'-11 3/16"	38'-11 3/16"	110'-9⅝"	3'-0⅜"
HCL & PGL	150'-0"	39'-0"	39'-0"	111'-0"	3'-0 7/16"
WEB #4	150'-5¾"	39'-1½"	39'-1½"	111'-4 5/16"	3'-0 9/16"

Note: All Dimensions are at Top Outside of Webs (Work Points).

	INITIAL	DATE	CHECKED BY	DKB	3-90
DESIGNED BY	DKB	3-90	QUANTITIES BY	LCR	3-90
CHECKED BY	WDA	3-90	CHECKED BY	LV	3-90
DETAILED BY	MED	3-90			

/usr/dcco/e470/rampt1/sffrm0614.90q
13-MAR-1990 15:47

E-470
Engineer 470 Partnership

DIVISION OF HIGHWAYS

FRAMING PLAN & GIRDER ELEVATION
RAMP F

Designer Burroughs/Stapleton | Structure Numbers F-17-JX
Detailer M. Davison
Drawing Number B-24 of 52 Drawings

UDA2:[200,32]SFFRM0614.90Q

Revision Dates (Preliminary Stage Only)

STATE OF COLORADO
STATE DEPARTMENT OF HIGHWAYS
DIVISION OF HIGHWAYS
C. D. H. FORM NO. 126
REV. FEB. 1984

AS CONSTRUCTED

NO REVISIONS ☐ REVISED ☐ VOID ☐

FED. ROAD REGION	DIVISION	PROJ. NO.	SHEET NO.	SHEET TOTAL
VIII	COLORADO	IA06/1882	186	

REVISIONS		

	INITIAL	DATE	CHECKED BY	QUANTITIES BY	CHECKED BY
DESIGNED BY	LRC	1-90	LRC	3-90	3-90
CHECKED BY				LRC	LV
DETAILED BY	LRC	1-90	LRC		

℄ Bearing Abutment 1 — "C"* — ℄ Field Splice 1 — "D"* — ℄ Pier 2 — "E"* — ℄ Field Splice 2 — "F"* — ℄ Field Splice 3 — "H"* — ℄ Pier 3

"A"* "B"*

*For Dimensions, See Girder Dimension Schedule Dwg. Nos. B-19 & B-20

TWENTIETH POINT	1.00	1.05	1.10	1.15	1.20	1.25	1.30	1.35	1.40	1.45	1.50	1.55	1.60	1.65	1.70	1.75	1.80	1.85	1.90	1.95	2.00	2.05	2.10	2.15	2.20	2.25	2.30	2.35	2.40	2.45	2.50	2.55	2.60	2.65	2.70	2.75	2.80	2.85	2.90	2.95	3.00	WEB
GIRDER D. L. DEFLECTION (FT.)	.000	.004	.008	.011	.014	.016	.018	.019	.020	.020	.019	.017	.015	.013	.011	.009	.007	.004	.002	.001	.000	.002	.004	.006	.008	.010	.013	.016	.016	.018	.018	.017	.015	.013	.010	.007	.005	.004	.002	.001	.000	①
TOTAL D. L. LESS GIRDER D. L. DEFLECTION(FT.)	.000	.018	.032	.045	.055	.064	.071	.077	.081	.081	.076	.069	.061	.053	.044	.035	.025	.015	.006	.000	.000	.008	.016	.023	.030	.040	.052	.062	.071	.071	.067	.061	.051	.036	.022	.015	.013	.010	.007	.004	.000	&
TOTAL D. L. DEFLECTION (FT.)	.000	.022	.040	.056	.069	.080	.089	.096	.101	.101	.095	.086	.076	.066	.055	.044	.032	.019	.008	.001	.000	.010	.020	.029	.038	.050	.065	.078	.087	.089	.085	.078	.066	.049	.032	.022	.018	.014	.009	.005	.000	②
GIRDER D. L. DEFLECTION (FT.)	.000	.004	.007	.010	.012	.014	.016	.017	.018	.018	.017	.015	.014	.012	.010	.008	.006	.004	.001	.000	.000	.000	.003	.005	.008	.010	.012	.014	.016	.016	.016	.014	.012	.009	.006	.004	.003	.003	.002	.001	.000	③
TOTAL D. L. LESS GIRDER D. L. DEFLECTION(FT.)	.000	.016	.030	.041	.051	.059	.065	.071	.074	.073	.069	.062	.055	.047	.040	.032	.024	.015	.008	.002	.000	.001	.009	.020	.029	.039	.049	.059	.067	.069	.065	.060	.051	.037	.025	.017	.014	.010	.007	.004	.000	&
TOTAL D. L. DEFLECTION (FT.)	.000	.020	.037	.051	.063	.073	.081	.088	.092	.091	.086	.077	.069	.059	.050	.040	.030	.019	.009	.002	.000	.001	.012	.025	.037	.049	.061	.073	.083	.085	.081	.074	.063	.046	.031	.021	.017	.013	.009	.005	.000	④

SPANS 1 & 2

℄ Pier 3 — "I"* — ℄ Field Splice 4 — "J"* — ℄ Field Splice 5 — "L"* — ℄ Pier 4 — "M"* — ℄ Field Splice 6 — "N"* — ℄ Field Splice 7 — "P"* — ℄ Back Bearing Pier 5

"G"* "K"*

*For Dimensions, See Girder Dimension Schedule Dwg. Nos. B-20, B-21 & B-22

TWENTIETH POINT	3.00	3.05	3.10	3.15	3.20	3.25	3.30	3.35	3.40	3.45	3.50	3.55	3.60	3.65	3.70	3.75	3.80	3.85	3.90	3.95	4.00	4.05	4.10	4.15	4.20	4.25	4.30	4.35	4.40	4.45	4.50	4.55	4.60	4.65	4.70	4.75	4.80	4.85	4.90	4.95	5.00	WEB
GIRDER D. L. DEFLECTION (FT.)	.000	.004	.012	.020	.028	.037	.045	.052	.058	.060	.060	.056	.048	.040	.040	.032	.024	.016	.008	.002	.000	.000	.005	.011	.018	.024	.030	.037	.043	.048	.050	.048	.043	.037	.031	.025	.019	.012	.006	.001	.000	①
TOTAL D. L. LESS GIRDER D. L. DEFLECTION(FT.)	.000	.016	.045	.078	.111	.143	.177	.211	.231	.242	.244	.240	.225	.195	.156	.125	.089	.064	.032	.008	.000	.001	.019	.043	.066	.090	.115	.138	.163	.184	.191	.187	.169	.146	.123	.098	.073	.047	.022	.003	.000	&
TOTAL D. L. DEFLECTION (FT.)	.000	.020	.057	.098	.139	.180	.222	.263	.289	.302	.304	.296	.273	.235	.196	.157	.113	.080	.040	.010	.000	.001	.024	.054	.084	.114	.145	.175	.206	.232	.241	.235	.212	.183	.154	.123	.092	.059	.028	.004	.000	②
GIRDER D. L. DEFLECTION (FT.)	.000	.004	.010	.019	.024	.034	.042	.049	.055	.057	.058	.056	.052	.045	.037	.030	.023	.015	.008	.002	.000	.000	.004	.010	.016	.022	.028	.034	.040	.045	.047	.046	.041	.036	.030	.024	.018	.012	.005	.002	.000	③
TOTAL D. L. LESS GIRDER D. L. DEFLECTION(FT.)	.000	.015	.043	.073	.107	.136	.167	.198	.217	.227	.228	.223	.205	.177	.147	.117	.088	.059	.030	.007	.000	.000	.018	.040	.063	.085	.108	.131	.154	.173	.180	.174	.157	.135	.114	.091	.068	.044	.017	.002	.000	&
TOTAL D. L. DEFLECTION (FT.)	.000	.019	.053	.092	.131	.170	.209	.247	.272	.284	.286	.279	.257	.222	.184	.147	.111	.074	.038	.009	.000	.000	.022	.050	.079	.107	.136	.165	.194	.218	.227	.220	.198	.171	.144	.115	.086	.056	.022	.004	.000	④

SPANS 3 & 4

E-470
Engineer 470 Partnership

DIVISION OF HIGHWAYS

STEEL BOX GIRDER CAMBER DIAGRAM

RAMP F

Designer	L. R. Creager	Structure Numbers	F-17-JX
Detailer	L. R. Creager		
Drawing Number	B-25 of 52 Drawings		

Revision Dates (Preliminary Stage Only)

UDA2:[200,32]SFCAM0114.90R

STATE OF COLORADO
STATE DEPARTMENT OF HIGHWAYS
DIVISION OF HIGHWAYS
M.H. FORM NO. 126
REV. FEB. 1984

AS CONSTRUCTED					
NO REVISIONS ☐	REVISED ☐	VOID ☐			

FED. ROAD REGION	DIVISION	PROJ. NO.	SHEET NO.	SHEET TOTALS
VIII	COLORADO	1A06/1B42	181	

REVISIONS		

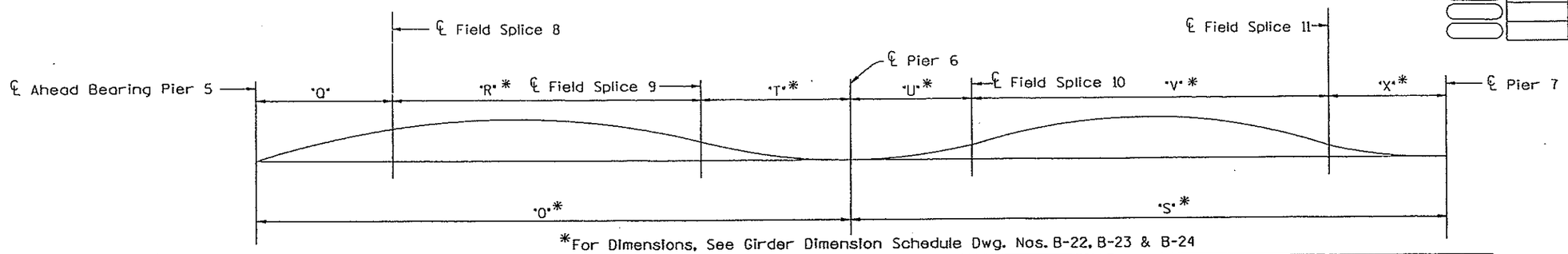

*For Dimensions, See Girder Dimension Schedule Dwg. Nos. B-22, B-23 & B-24

TWENTIETH POINT	5.00	5.05	5.10	5.15	5.20	5.25	5.30	5.35	5.40	5.45	5.50	5.55	5.60	5.65	5.70	5.75	5.80	5.85	5.90	5.95	6.00	6.05	6.10	6.15	6.20	6.25	6.30	6.35	6.40	6.45	6.50	6.55	6.60	6.65	6.70	6.75	6.80	6.85	6.90	6.95	7.00	WEB
GIRDER D.L. DEFLECTION (FT.)	.000	.002	.007	.013	.020	.027	.033	.039	.045	.050	.052	.050	.045	.039	.033	.027	.020	.013	.007	.002	.000	.001	.006	.012	.018	.025	.031	.037	.043	.047	.047	.046	.043	.038	.031	.024	.017	.011	.005	.001	.000	①
TOTAL D.L. LESS GIRDER D.L. DEFLECTION(FT.)	.000	.004	.024	.050	.077	.102	.127	.152	.175	.194	.200	.194	.174	.150	.126	.100	.075	.048	.022	.002	.000	.003	.022	.047	.072	.097	.123	.148	.173	.186	.189	.183	.171	.152	.125	.096	.068	.043	.017	.004	.000	&
TOTAL D.L. DEFLECTION (FT.)	.000	.006	.031	.063	.097	.129	.160	.191	.220	.244	.252	.244	.219	.189	.159	.127	.095	.061	.029	.004	.000	.004	.028	.059	.090	.122	.154	.185	.216	.233	.236	.229	.214	.190	.156	.120	.085	.054	.026	.005	.000	②
GIRDER D.L. DEFLECTION (FT.)	.000	.001	.006	.013	.019	.025	.031	.037	.043	.048	.050	.048	.043	.037	.031	.025	.018	.012	.006	.001	.000	.001	.005	.011	.018	.024	.030	.036	.042	.046	.046	.045	.042	.037	.030	.023	.016	.010	.005	.001	.000	③
TOTAL D.L. LESS GIRDER D.L. DEFLECTION(FT.)	.000	.005	.023	.046	.072	.097	.121	.144	.165	.183	.188	.182	.163	.141	.118	.095	.071	.045	.009	.003	.000	.003	.022	.047	.070	.095	.119	.149	.167	.179	.182	.177	.165	.147	.121	.093	.068	.042	.020	.004	.000	&
TOTAL D.L. DEFLECTION (FT.)	.000	.006	.029	.059	.091	.122	.152	.181	.208	.231	.238	.230	.206	.178	.149	.120	.089	.057	.027	.004	.000	.004	.027	.058	.088	.119	.149	.179	.209	.225	.228	.222	.207	.184	.151	.116	.082	.052	.025	.005	.000	④

SPANS 5 & 6

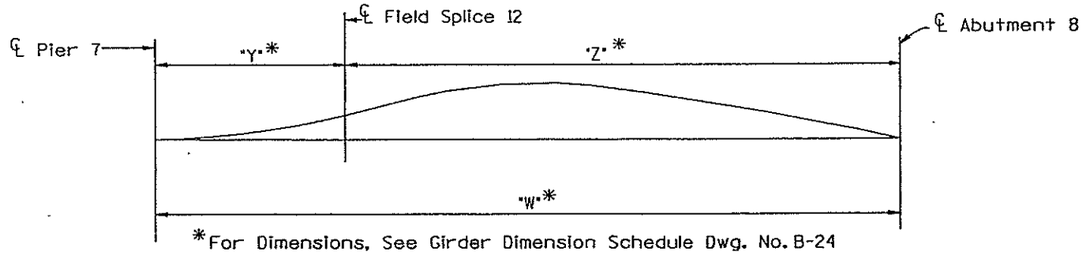

*For Dimensions, See Girder Dimension Schedule Dwg. No. B-24

TWENTIETH POINT	7.00	7.05	7.10	7.15	7.20	7.25	7.30	7.35	7.40	7.45	7.50	7.55	7.60	7.65	7.70	7.75	7.80	7.85	7.90	7.95	8.00	WEB
GIRDER D.L. DEFLECTION (FT.)	.000	.001	.003	.007	.012	.017	.022	.027	.032	.037	.041	.043	.044	.044	.041	.037	.032	.025	.018	.010	.000	①
TOTAL D.L. LESS GIRDER D.L. DEFLECTION(FT.)	.000	.003	.014	.032	.050	.065	.091	.113	.135	.155	.170	.178	.179	.174	.165	.149	.127	.102	.073	.039	.000	&
TOTAL D.L. DEFLECTION (FT.)	.000	.004	.017	.039	.062	.087	.113	.140	.167	.192	.211	.221	.223	.218	.206	.186	.159	.127	.091	.049	.000	②
GIRDER D.L. DEFLECTION (FT.)	.000	.001	.003	.007	.011	.016	.021	.026	.032	.036	.040	.042	.042	.041	.040	.035	.030	.024	.017	.009	.000	③
TOTAL D.L. LESS GIRDER D.L. DEFLECTION(FT.)	.000	.003	.014	.030	.049	.067	.087	.108	.128	.148	.162	.169	.172	.168	.158	.144	.123	.098	.070	.038	.000	&
TOTAL D.L. DEFLECTION (FT.)	.000	.004	.017	.037	.060	.083	.108	.134	.160	.184	.202	.211	.214	.209	.198	.179	.153	.122	.087	.047	.000	④

SPAN 7

DESIGNED BY	INITIAL	DATE	CHECKED BY	QUANTITIES BY	CHECKED BY
CHECKED BY	LRC	1-90	LRC	LV	3-90
DETAILED BY	LRC	1-90			

E-470
Engineer 470 Partnership

DIVISION OF HIGHWAYS

STEEL BOX GIRDER CAMBER DIAGRAM

RAMP F

Designer	L. R. Creager	Structure Numbers	F-17-JX
Detailer	L. R. Creager		

Drawing Number B-26 of 52 Drawings

Revision Dates (Preliminary Stage Only)

UDA2:[200,32]SFCAM0114.90R

STATE OF COLORADO
STATE DEPARTMENT OF HIGHWAYS
DIVISION OF HIGHWAYS:
H.L.H. FORM NO. 126:
FEB. 1984

AS CONSTRUCTED			FED. ROAD REGION	DIVISION	PROJ. NO.	SHEET NO.	SHEET TOTALS
NO REVISIONS	REVISED	VOID	VIII	COLORADO	IA06/1362	182	

REVISIONS

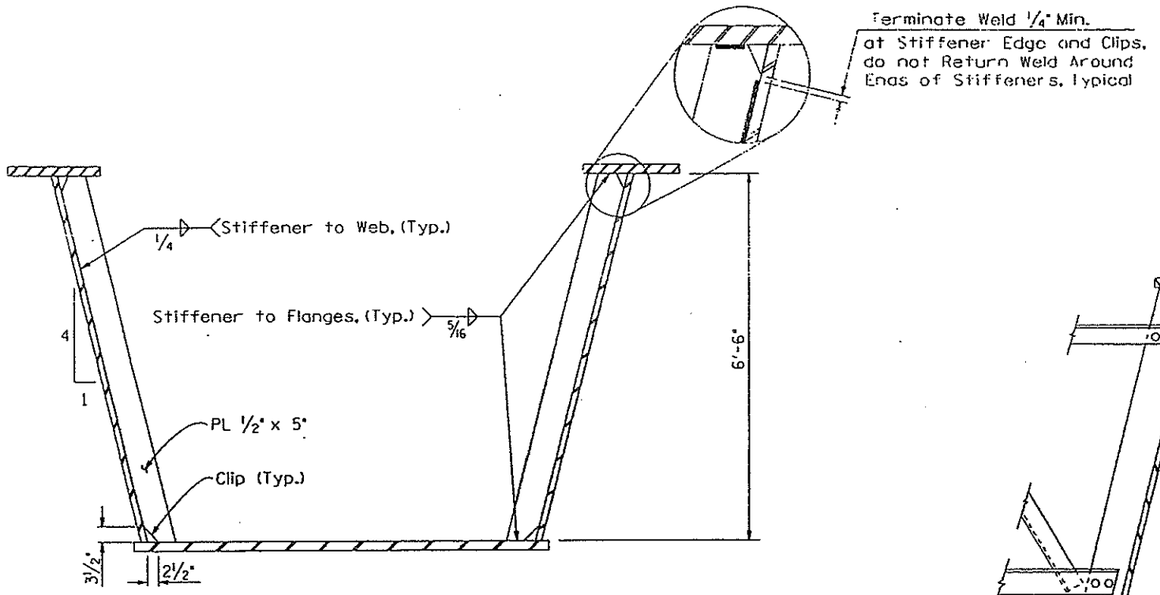

INTERMEDIATE STIFFENER

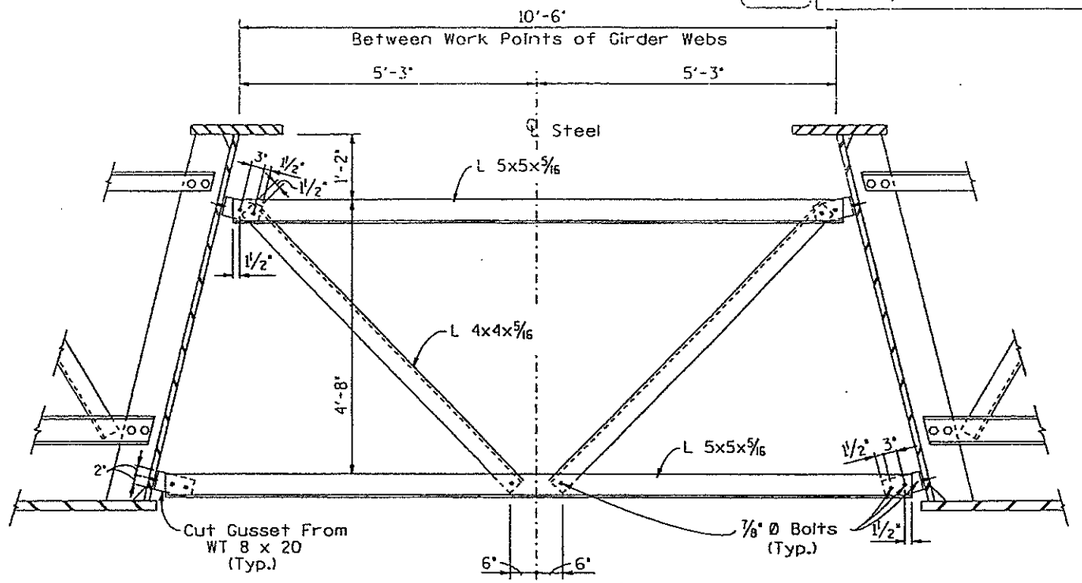

TEMPORARY ERECTION CROSS-FRAME

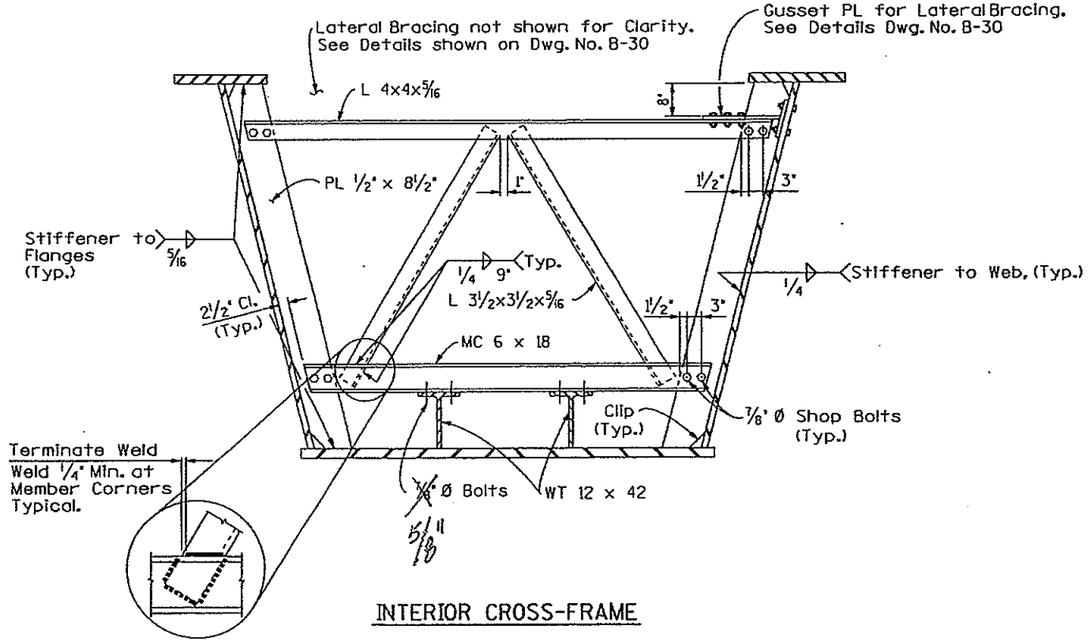

INTERIOR CROSS-FRAME

NOTES:

1. Temporary erection cross-frames shall be in place between adjacent box girders prior to proceeding with the erection of additional girders.
2. Interior Cross-Frames & Temporary Erection Cross-Frames shall be AASHTO M-183 (ASTM A-36) Structural Steel.
3. Cross-Frames between box girders shall be in place during placement and curing of deck, (until slab has reached its 28 - Day Design Strength) after which these cross-frames shall be removed, with the exception of 7/8" Ø Bolts through the webs which shall be torqued to Fastener Tension according to Std. Specification.

DESIGNED BY	INITIAL	DATE	CHECKED BY	DKB	3-90
CHECKED BY	DKB	3-90	QUANTITIES BY	MRM	3-90
DETAILED BY	DLK	3-90	CHECKED BY	LRC	3-90
				LV	3-90

E-470
Engineer 470 Partnership

DIVISION OF HIGHWAYS

INTERMEDIATE STIFFENER AND CROSS-FRAME DETAILS

RAMP F

Designer	Burroughs/Stapleton	Structure Numbers	F-17-JX
Detailer	D. Kurschinski		
Drawing Number	B-27 of 52 Drawings		

Revision Dates (Preliminary Stage Only)

UDA2:[200,32]SFDIA0314.90R

STATE OF COLORADO
DEPARTMENT OF HIGHWAYS
DIVISION OF HIGHWAYS
FORM NO. 126
REV. 1984

AS CONSTRUCTED					
NO REVISIONS ☐	REVISED ☐	VOID ☐			

FED. ROAD REGION	DIVISION	PROJ. NO.	SHEET NO.	SHEET TOTALS
VIII	COLORADO	IAOR/1802	183	

REVISIONS

DESIGNED BY		DATE	3-90
CHECKED BY	MRM	INITIAL	DKB
DETAILED BY		DATE	3-90
CHECKED BY	DKB	INITIAL	DLK
QUANTITIES BY	LRC	DATE	3-90
CHECKED BY	LV	INITIAL	

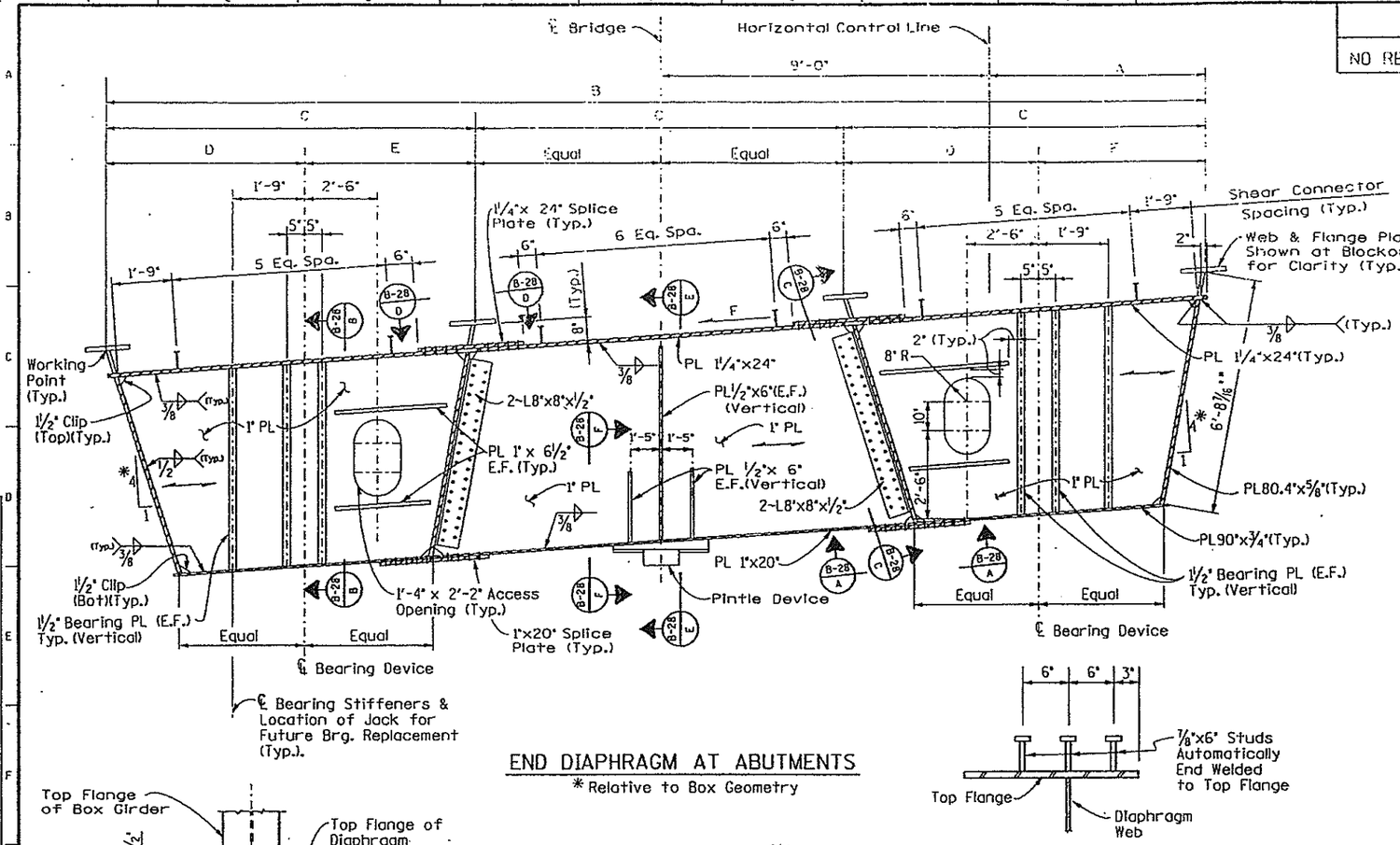

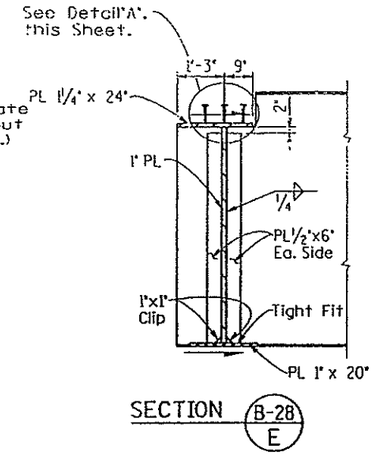

SECTION B-28 E

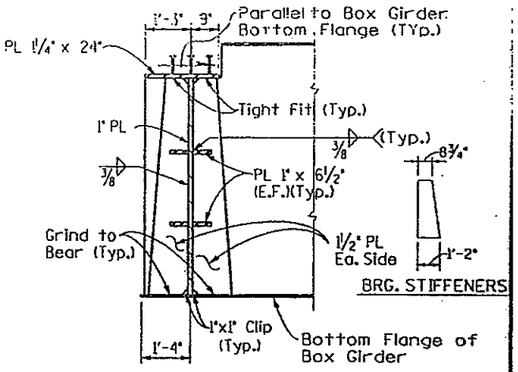

SECTION B-28 B

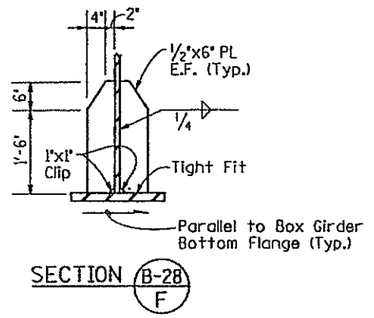

SECTION B-28 F

DETAIL "A"

END DIAPHRAGM AT ABUTMENTS

* Relative to Box Geometry

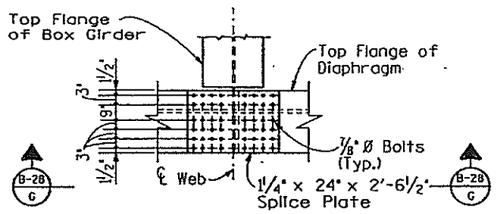

SECTION B-28 D

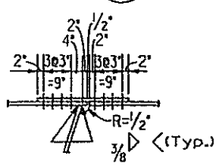

SECTION B-28 G

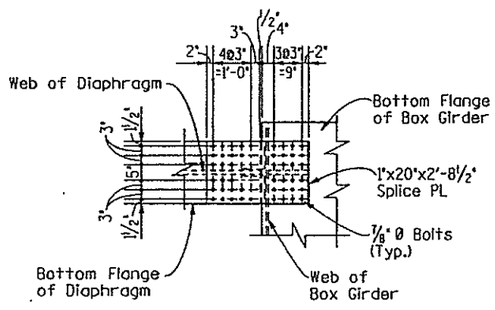

SECTION B-28 A

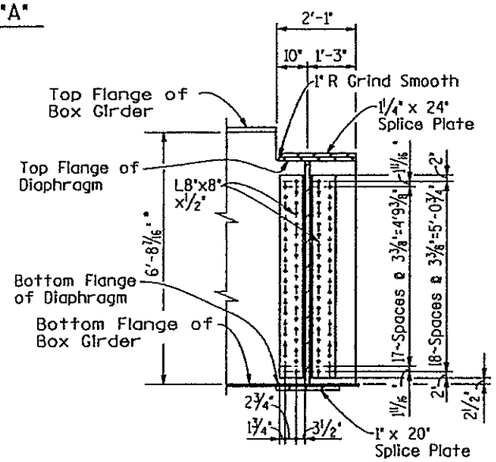

SECTION B-28 C

* Relative to Box Geometry

ABUTMENT	A	B	C	D	E	F
#1	6'-8⅞"	31'-5⅛"	10'-5¹¹⁄₁₆"	5'-8¼"	4'-9½"	.069'/,
#8	6'-8¾"	31'-5⅝"	10'-5⅞"	5'-6¾"	4'-11⅛"	.049'/,

NOTES:

1. For Box Girder Geometry, See Dwg. No.B-24.
2. For Bearing Device Details, See Dwg. No.B-40 & B-41.
3. For Expansion Device Details, See Dwg. No.B-37 & B-38.
4. For Pintle Details, See Dwg. No.B-30.
5. ——— = Primary Direction of Rolling for Steel Plates as Fabricated in Mill.
6. Steel for Shear Connectors shall be AASHTO M-169 (ASTM A-108)
7. Lateral Bracing not shown for clarity. See Details shown on Dwg. No. B-30.

DIVISION OF HIGHWAYS

END DIAPHRAGM DETAILS ABUTMENTS 1 AND 8 RAMP F

E-470

Engineer 470 Partnership

Designer	D. Burroughs	Structure Numbers	F-17-JX
Detailer	Davison/Kurschinski		

Drawing Number B-28 of 52 Drawings

Revision Dates (Preliminary Stage Only)

UDA2:[200.23]SFDIA0114.90R

STATE OF COLORADO
STATE DEPARTMENT OF HIGHWAYS
DIVISION OF HIGHWAYS
D. O. H. FORM NO. 126
REV. FEB. 1984

54

AS CONSTRUCTED					
NO REVISIONS ☐	REVISED ☐	VOID ☐			

FED. ROAD REGION	DIVISION	PROJ. NO.	SHEET NO.	SHEET TOTAL
VIII	COLORADO	1A06/1802	184	

REVISIONS			
A-1	4-2-90	Dimensions	D.K.B.

	DATE	CHECKED BY	CHECKED BY	CHECKED BY
INITIAL	3-90	MRM	LRC	LJY
DKB	3-90	DKB	LRC	LJY
DESIGNED BY	3-90	QUANTITIES BY	CHECKED BY	DETAILED BY
CHECKED BY	3-90			MED
DETAILED BY	3-90			

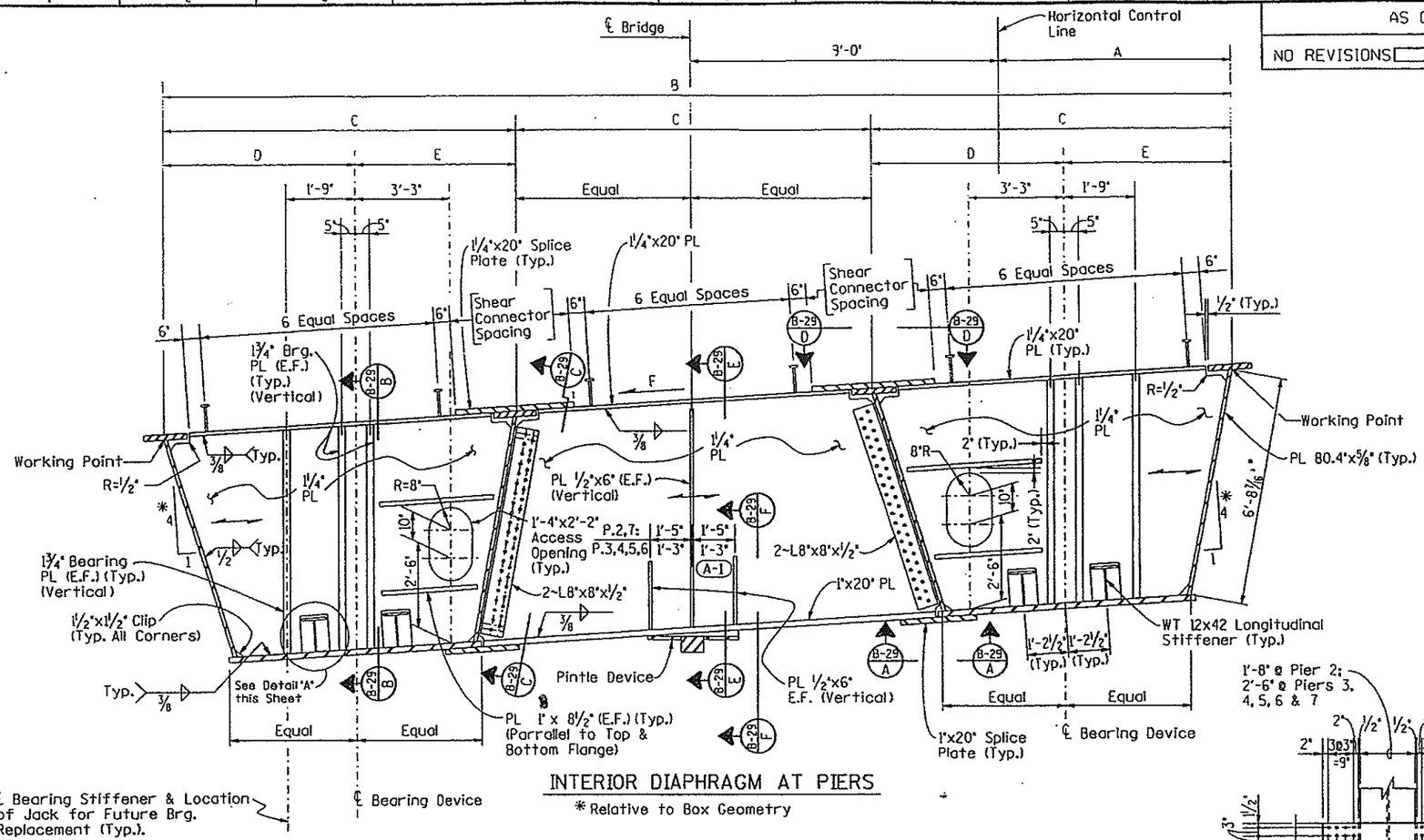

INTERIOR DIAPHRAGM AT PIERS

*Relative to Box Geometry

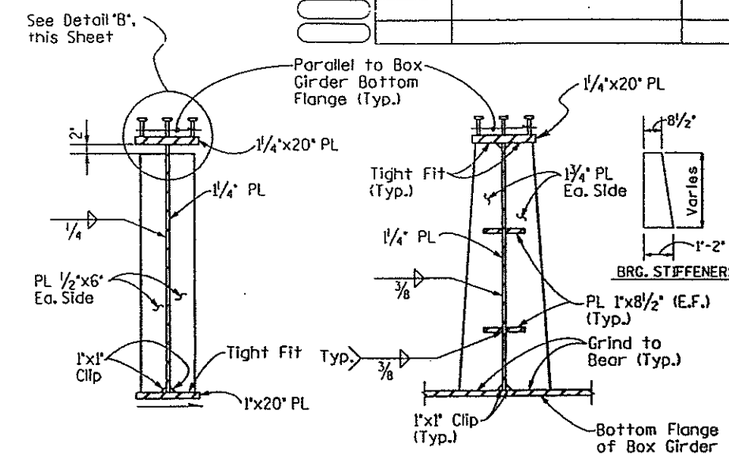

SECTION B-29 E

SECTION B-29 B

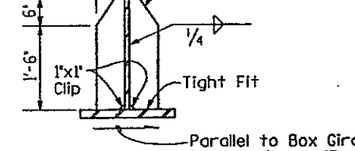

SECTION B-29 F

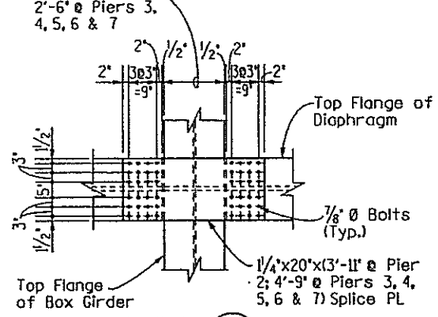

SECTION B-29 D

NOTES:

1. For Box Girder Geometry, See Dwg. No. B-24.
2. For Bearing Device Details, See Dwg. No. B-40 & B-41.
3. For Pintle Details, See Dwg. No. B-30.
4. ——— = Primary Direction of Rolling for Steel Plates as Fabricated in Mill.
5. Lateral Bracing not shown for Clarity; See Dwg. No. B-30.
6. Steel for Shear Connectors shall be AASHTO M-169 (ASTM A-108).

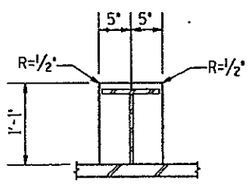

DETAIL "A"

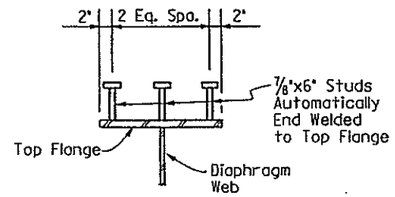

DETAIL "B"

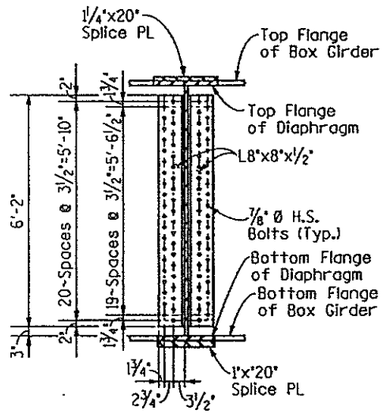

SECTION B-29 C

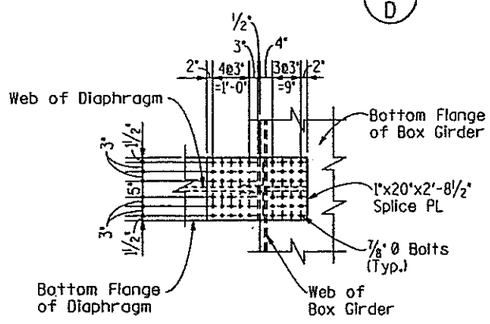

SECTION B-29 A

PIER	A	B	C	D	E	F
#2	6'-8 9/16"	31'-5 1/8"	10'-5 11/16"	5'-8 1/8"	4'-9 5/8"	.068"/'
#3	6'-8 5/8"	31'-5 1/4"	10'-5 3/4"	5'-7 13/16"	4'-9 15/16"	.063"/'
#4	6'-8 5/8"	31'-5 1/4"	10'-5 3/4"	5'-7 13/16"	4'-9 15/16"	.063"/'
#5	6'-8 5/8"	31'-5 1/4"	10'-5 3/4"	5'-7 13/16"	4'-9 15/16"	.063"/'
#6	6'-8 3/4"	31'-5 1/2"	10'-5 13/16"	5'-6 7/8"	4'-11"	.051"/'
#7	6'-8 3/4"	31'-5 9/16"	10'-5 7/8"	5'-6 3/4"	4'-11 1/8"	.049"/'

E-470
Engineer 470 PartnersNp

DIVISION OF HIGHWAYS

INTERIOR DIAPHRAGM DETAILS PIERS 2 THRU 7

RAMP F

Designer	D. Burroughs	Structure Numbers	F-17-JX
Detailer	M. Davison		
Drawing Number	B-29 of 52 Drawings		

Revision Dates (Preliminary Stage Only)

28-MAR-1990 16:08
/usr/acad/a470/rampf/stsla0214.90r
UDA2:[200,23]SFDIA0214.90R

STATE OF COLORADO
STATE DEPARTMENT OF HIGHWAYS
DIVISION OF HIGHWAYS
S.H. FORM NO. 126
REV. FEB. 1984

AS CONSTRUCTED
NO REVISIONS ☐ REVISED ☐ VOID ☐

FED. ROAD REGION	DIVISION	PROJ. NO.	SHEET NO.	SHEET TOTALS
VIII	COLORADO	IA06/1566	185	

REVISIONS			

INITIAL	DKB	DKB	WRH	LRC	LV
DATE	3-90	3-90	3-90	3-90	3-90
DESIGNED BY		QUANTITIES BY		CHECKED BY	
CHECKED BY					
DETAILED BY		DLK		CHECKED BY	
DATE		3-90		3-90	

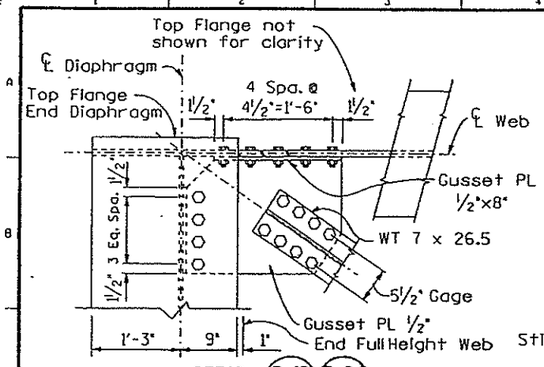

DETAIL B-19 1 | B-24 1

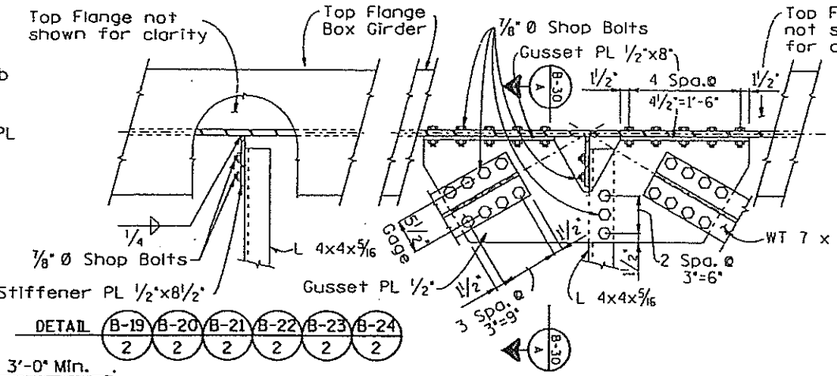

DETAIL B-19 2 | B-20 2 | B-21 2 | B-22 2 | B-23 2 | B-24 2

DETAIL B-19 3 | B-20 3 | B-21 3 | B-22 3 | B-23 3 | B-24 3

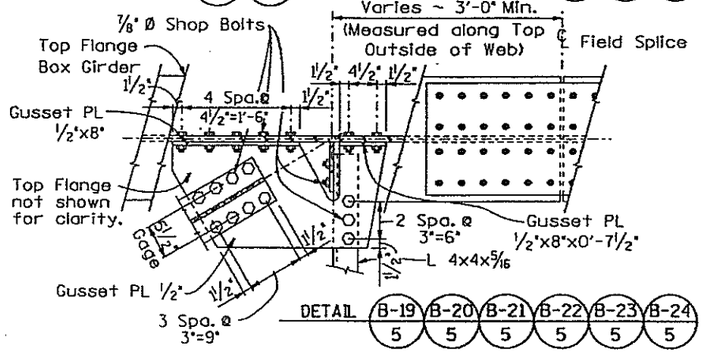

DETAIL B-19 5 | B-20 5 | B-21 5 | B-22 5 | B-23 5 | B-24 5

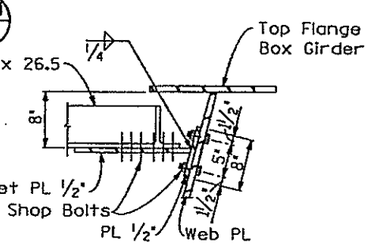

SECTION B-30 A

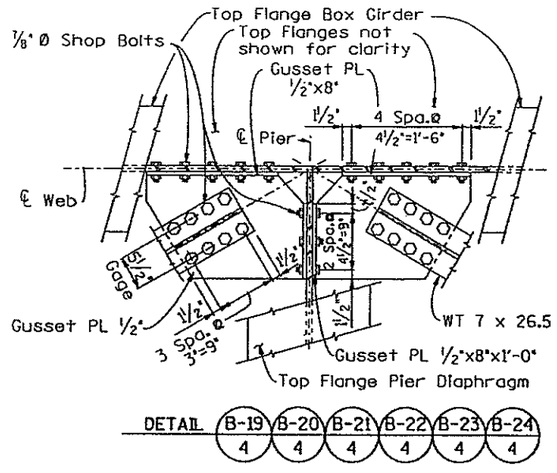

DETAIL B-19 4 | B-20 4 | B-21 4 | B-22 4 | B-23 4 | B-24 4

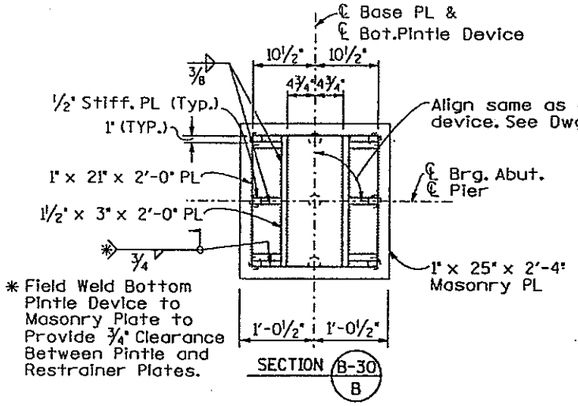

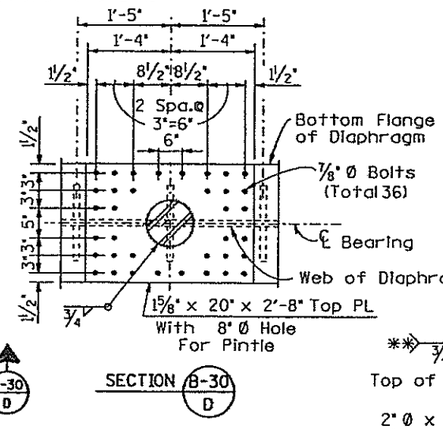

SECTION B-30 D

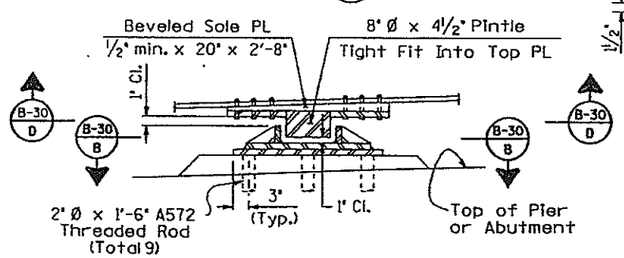

PINTLE DETAILS ~ EXPANSION
(Abutments 1 & 8, Piers 2 & 7)

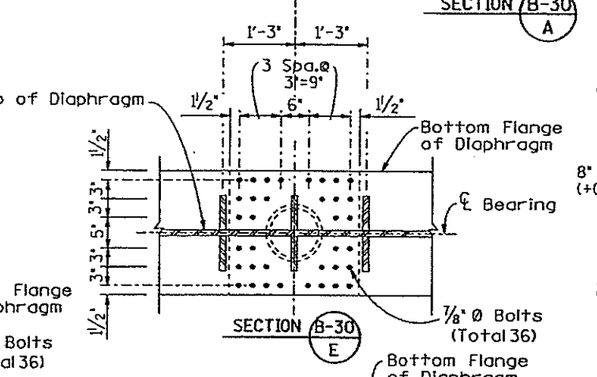

SECTION B-30 E

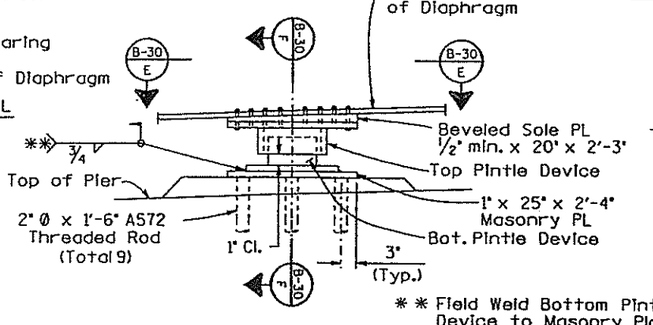

PINTLE DETAILS ~ FIXED
(Piers 3, 4, 5 & 6)

** Field Weld Bottom Pintle Device to Masonry Plate after Both Bearings in Pier have been Plug Welded

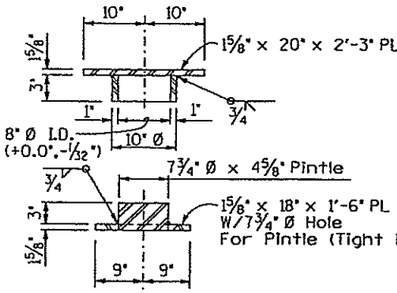

SECTION B-30 F

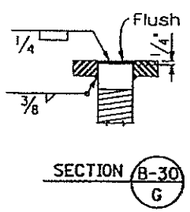

SECTION B-30 G

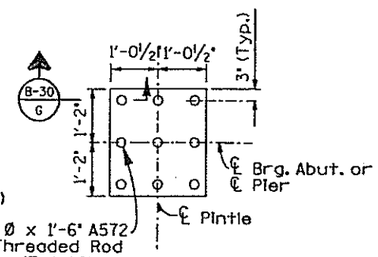

PLAN ~ MASONRY PLATE

DIVISION OF HIGHWAYS

LATERAL BRACING AND PINTLE DETAILS

RAMP F

Designer	Burroughs/Stapleton	Structure Numbers	F-17-JX
Detailer	D. Kurschinski		

Drawing Number B-30 of 52 Drawings

E-470
Engineer 470 Partnership

Revision Dates (Preliminary Stage Only)

UDA2:[200,32]SFSSM0114.90S

STATE OF COLORADO
DEPARTMENT OF HIGHWAYS
DIVISION OF HIGHWAYS
STD. FORM NO. 126
REV. FEB. 1984

AS CONSTRUCTED						
NO REVISIONS ☐	REVISED ☐	VOID ☐	FED. ROAD REGION	DIVISION	PROJ. NO.	SHEET NO.	SHEET TOTALS
			VIII	COLORADO	IAO6/1882	186	

REVISIONS		

	DESIGNED BY	CHECKED BY	DETAILED BY	CHECKED BY	QUANTITIES BY	CHECKED BY
INITIAL	DKB	DLK				
DATE	3-90	3-90	3-90	3-90	3-90	3-90
	DKB	MRM	LRC	LV		

PLAN OF ACCESS MANHOLE IN BOTTOM FLANGE

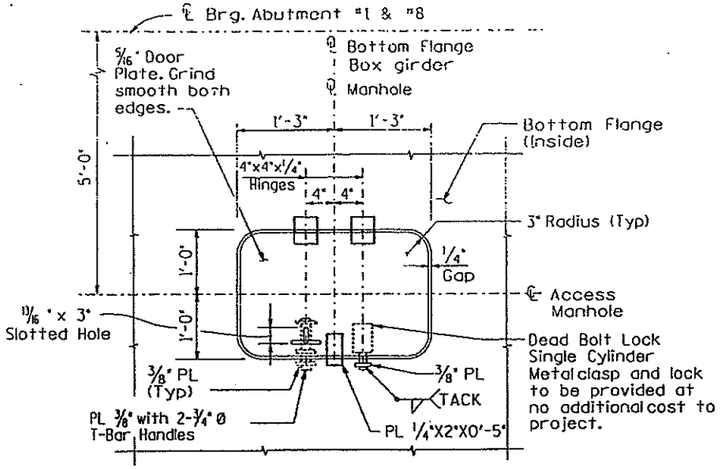

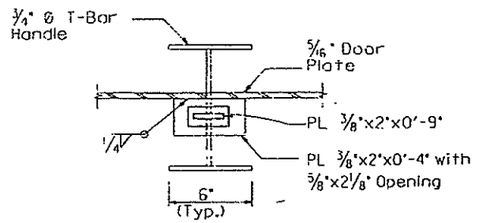

SECTION B-31 / A

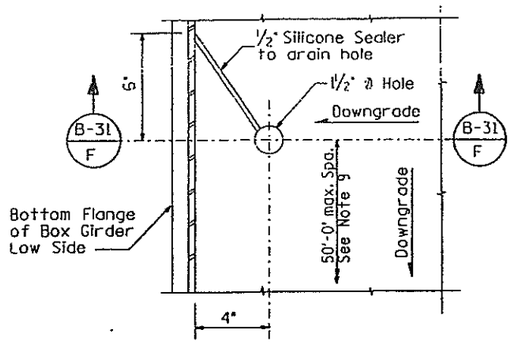

GIRDER DRAIN HOLE DETAILS

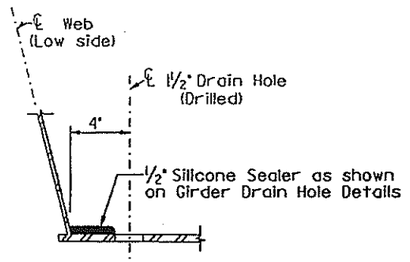

SECTION B-31 / F

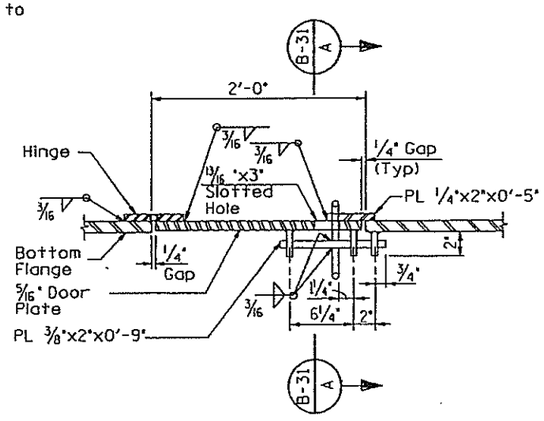

HINGE AND BOLT DETAIL

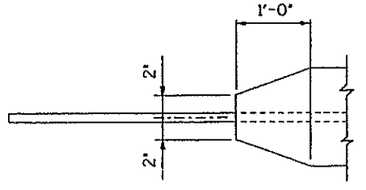

PLAN

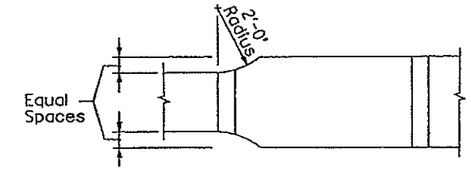

PLAN ~ WIDTH TRANSITION

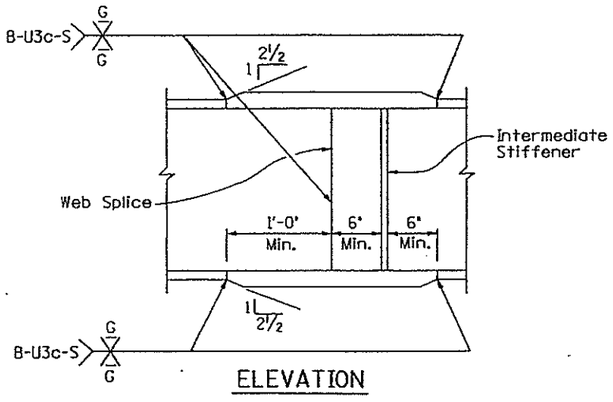

ELEVATION

SHOP SPLICE DETAIL

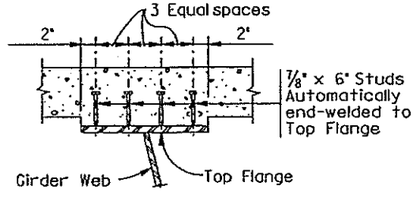

SHEAR CONNECTOR DETAILS

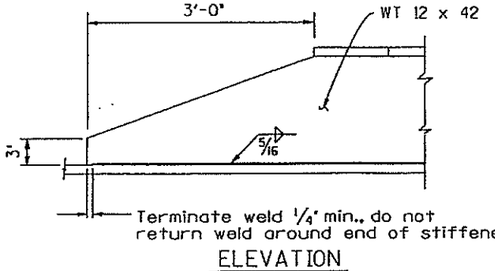

ELEVATION

LONGITUDINAL STIFFENER TERMINATION

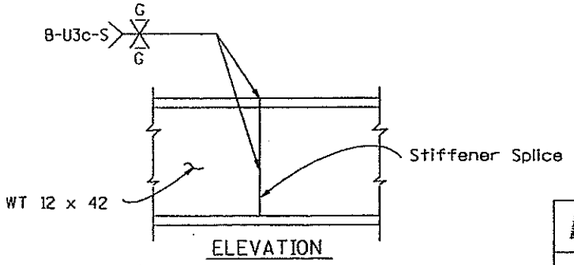

ELEVATION

SHOP SPLICE DETAIL

Notes:

1. Clean steel before applying Silicone Sealer Compound. Compound subject to approval of engineer.
2. Silicone Sealer will not be paid for separately but shall be included in the cost of the work.
3. For location of access Manholes, see Framing Plans.
4. Steel for Manhole shall be AASHTO M-183 (ASTM A-36).
5. Grind flush all flange butt joints.
6. All groove welds in butt joints shall be ultrasonically tested as per Section 6.7 of ANSI/AASHTO/AWS DL5-88.
7. Steel for Shear Connectors shall be AASHTO M-169 (ASTM A-108)
8. To open manhole, lift up. (Hinge on inside).
9. In addition to drain holes shown, provide drain holes at low points of box girder.
10. Place Silicone Sealer prior to deck pour.

E-470
Engineer 470 Partnership

DIVISION OF HIGHWAYS

MISCELLANEOUS STEEL DETAILS

RAMP F

Designer	Burroughs/Stapleton	Structure Numbers	F-17-JX
Detailer	D. Kurschinski		
Drawing Number	B-31 of 52 Drawings		

Revision Dates (Preliminary Stage Only)

UDA2:[200,32]SESSM0113.90S

STATE OF COLORADO
STATE DEPARTMENT OF HIGHWAYS
DIVISION OF HIGHWAYS
C.D.H. FORM NO. 126
REV. FEB. 1984

AS CONSTRUCTED		
NO REVISIONS ☐	REVISED ☐	VOID ☐

FED. ROAD REGION	DIVISION	PROJ. NO.	SHEET NO.	SHEET TOTALS
VIII	COLORADO	IA06/1802	187	

REVISIONS		

DESIGNED BY		INITIAL	
CHECKED BY		DATE	
DETAILED BY	DLK	3-90	
CHECKED BY		QUANTITIES	
CHECKED BY	LRC	3-90	LV
CHECKED BY	DKB	3-90	MRM

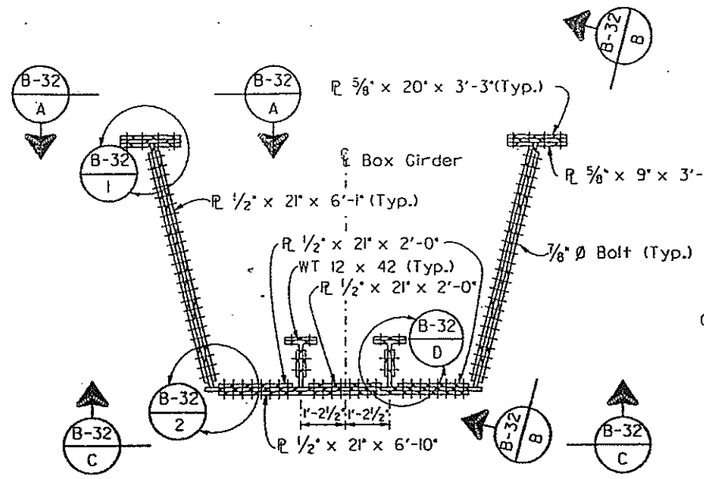

FIELD SPLICE TYPICAL SECTION

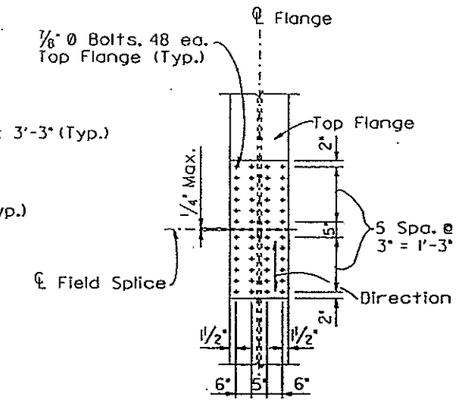

SECTION B-32 A

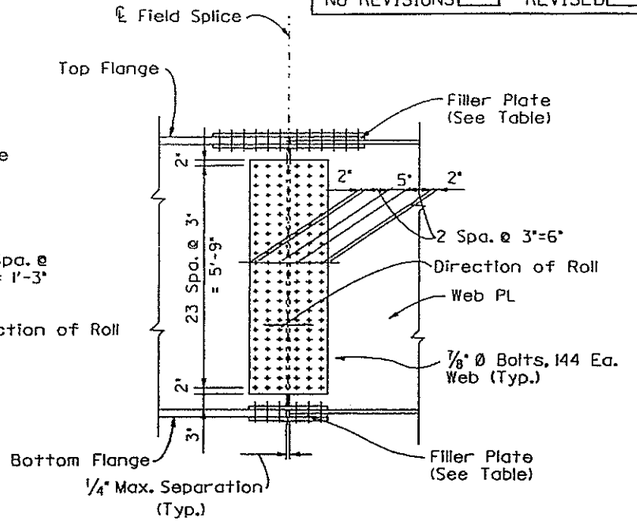

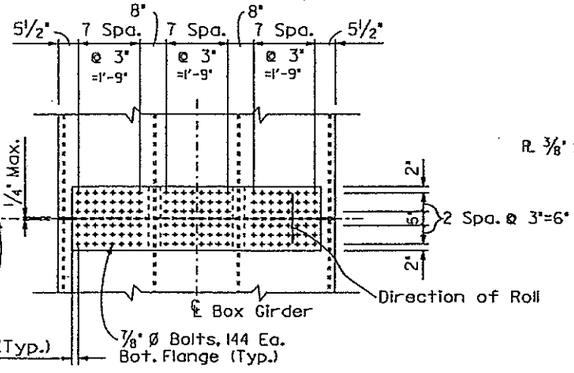

SECTION B-32 C

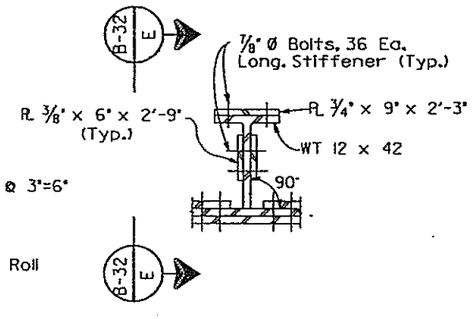

DETAIL B-32 D

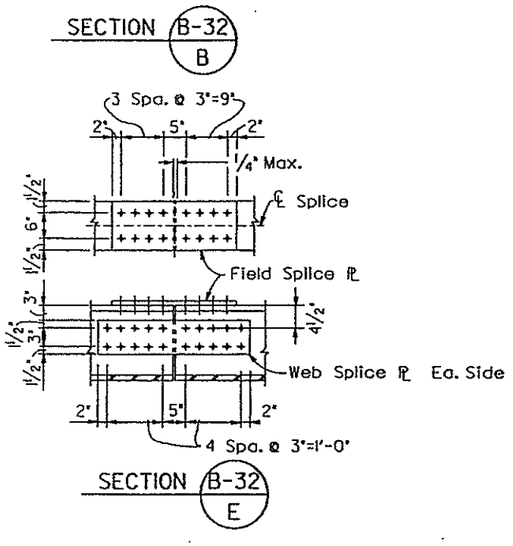

SECTION B-32 E

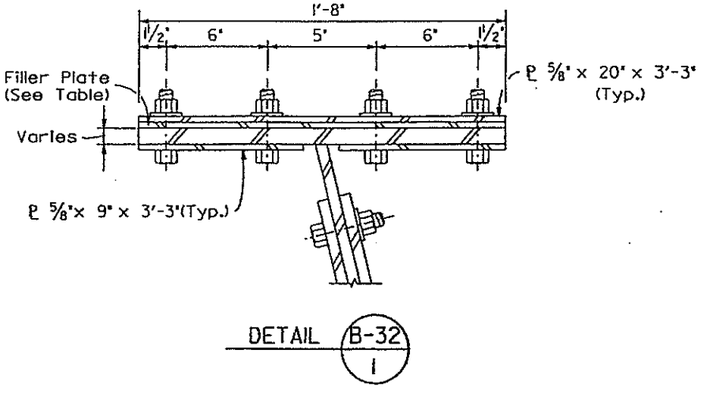

DETAIL B-32 I

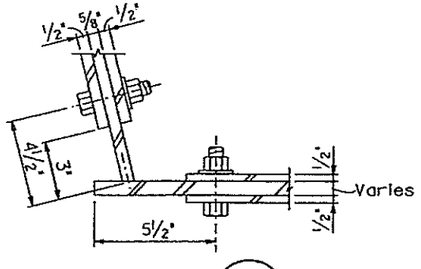

DETAIL B-32 2

FILLER PLATE TABLE

FIELD SPLICE	TOP OF TOP FLANGE	BOT. OF BOTTOM FLANGE
1	—	2 ~ ¼"x10⅜" x 6'-10"
2	—	2 ~ ¼"x10⅜" x 6'-10"
3	4 ~ ¼"x20"xl'-7⅜"	2 ~ ½"x10⅜" x 6'-10"
4	4 ~ ¼"x20"xl'-7⅜"	2 ~ ½"x10⅜" x 6'-10"
5	4 ~ 1"x20"xl'-7⅜"	2 ~ ½"x10⅜" x 6'-10"
6	4 ~ 1"x20"xl'-7⅜"	2 ~ ½"x10⅜" x 6'-10"
7	4 ~ ¾"x20"xl'-7⅜"	2 ~ ½"x10⅜" x 6'-10"
8	4 ~ ¾"x20"xl'-7⅜"	2 ~ ½"x10⅜" x 6'-10"
9	4 ~ ¾"x20"xl'-7⅜"	2 ~ ½"x10⅜" x 6'-10"
10	4 ~ ¾"x20"xl'-7⅜"	2 ~ ½"x10⅜" x 6'-10"
11	4 ~ ¾"x20"xl'-7⅜"	2 ~ ½"x10⅜" x 6'-10"
12	4 ~ ¾"x20"xl'-7⅜"	2 ~ ½"x10⅜" x 6'-10"

E-470
Engineer 470 Partnership

DIVISION OF HIGHWAYS

FIELD SPLICES

RAMP F

Designer	D. Burroughs	Structure Numbers	F-17-JX
Detailer	D. Kurschinski		
Drawing Number B-32 of 52 Drawings			

Revision Dates | Preliminary Stage Only

UDA2:[200,323]SFFSM0114.90S

STATE OF COLORADO
STATE DEPARTMENT OF HIGHWAYS
DIVISION OF HIGHWAYS
C.O.H. FORM NO. 126
REV. FEB. 1984

AS CONSTRUCTED		
NO REVISIONS ☐	REVISED ☐	VOID ☐

FED. ROAD REGION	DIVISION	PROJ. NO.	SHEET NO.	SHEET TOTALS
VIII	COLORADO	1A06/1B#2	188	

REVISIONS

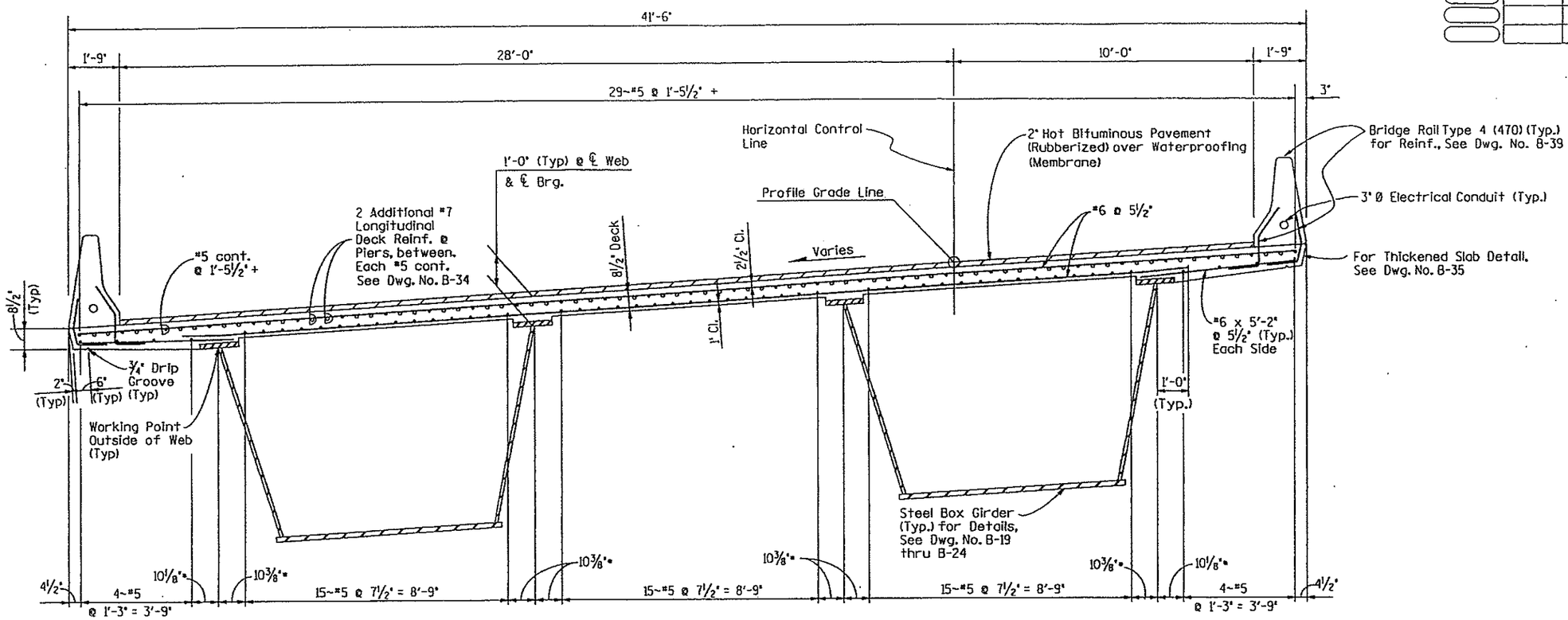

TYPICAL SECTION

Dimensions Marked * Vary with the Cross-Slope

NOTES:

1. Deck Concrete shall be Concrete Class D (Bridge).
2. Permanent Deck Forms are not permitted in the Cantilever Portions of the Deck Slab.
3. All Cost of Additional Material & Labor required to use Permanent Deck Forms shall be included in the work.
4. For Variable Cross-Slope, See Superelevation Transition Diagram on Dwg. No. B-52.

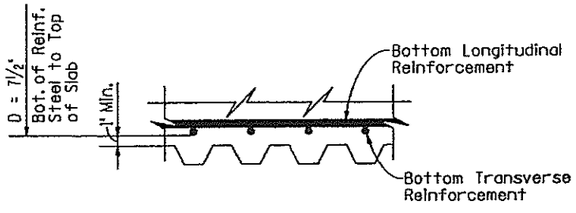

PERMANENT DECK FORM DETAIL

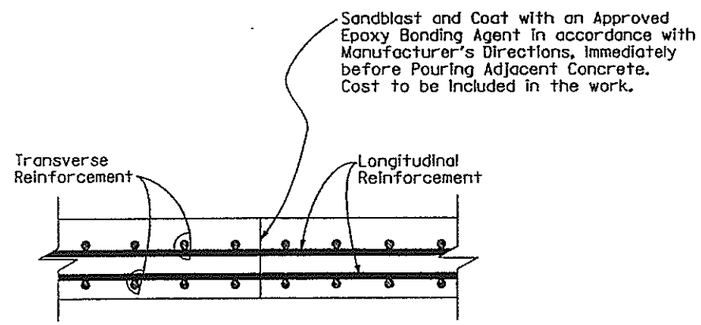

TRANSVERSE CONSTRUCTION JOINT DETAIL

DESIGNED BY	INITIAL	DATE	CHECKED BY	D.K.B.	3-90
CHECKED BY	D.K.B.	3-90	QUANTITIES BY	M.R.M.	3-90
DETAILED BY	M.E.D.	3-90	CHECKED BY	L.R.C.	3-90
				LV	3-90

E-470
Engineer 470 Partnership

DIVISION OF HIGHWAYS

DECK SECTION

RAMP F

Designer	D. Burroughs	Structure Numbers	F-17-JX
Detailer	M. Davison		
Drawing Number	B-33	of	52 Drawings

Revision Dates (Preliminary Stage Only)

UDA2:[200,32]SFDKS0114.90N

STATE OF COLORADO
DEPARTMENT OF HIGHWAYS
DIVISION OF HIGHWAYS
STD. FORM NO. 126
REV. FEB. 1984

AS CONSTRUCTED			
NO REVISIONS ☐	REVISED ☐	VOID ☐	

FED. ROAD REGION	DIVISION	PROJ. NO.	SHEET NO.	SHEET TOTAL
VIII	COLORADO	IA06/1B#2	189	

REVISIONS		

DESIGNED BY	INITIAL	DATE
CHECKED BY	DKB	3-90
DETAILED BY	M.ED.	3-90

CHECKED BY		
QUANTITIES BY	DKB	3-90
CHECKED BY	MRM	3-90
	LRC	3-90
	LV	3-90

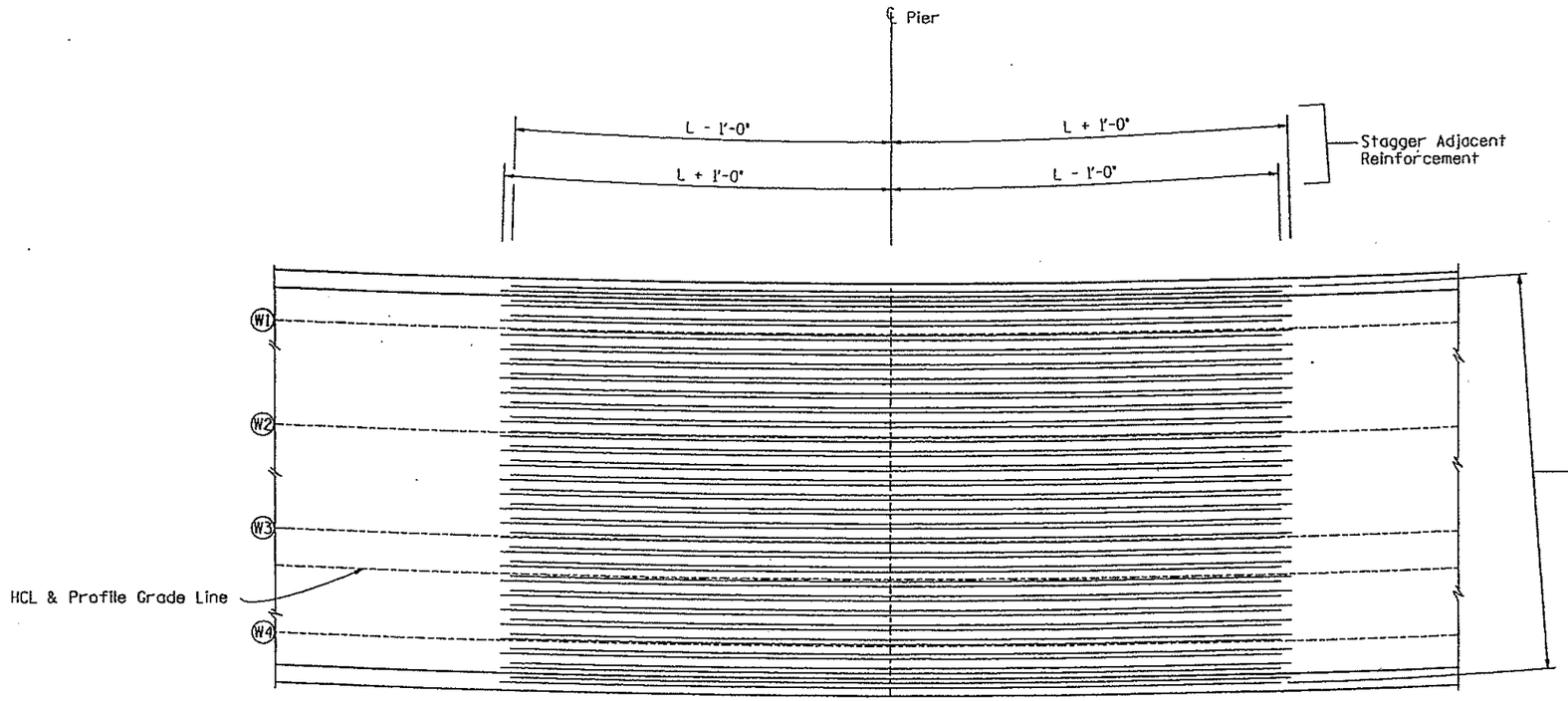

PARTIAL DECK REINFORCING PLAN

*Additional Longitudinal Deck Reinforcing, See Table this Drawing.
See Typical Section, Dwg. No. B-33, for Typical Deck Reinforcing.

ADDITIONAL LONGITUDINAL DECK REINFORCEMENT AT PIERS			
PIER	NUMBER	SIZE	L
Pier #2	56	#7	34'-0"
Pier #3	56	#7	44'-0"
Pier #4	56	#7	53'-0"
Pier #5	56	#7	53'-0"
Pier #6	56	#7	53'-0"
Pier #7	56	#7	44'-0"

NOTES:

1. All Transverse Deck Reinforcing shall be Placed Perpendicular to the Webs (Radially).
2. Number and Location of Splices shall be Approved by the Engineer.
3. Lap Splices shall be Staggered at Least 2'-6" Minimum.
4. All Concrete from Previous Pour shall be Placed 24 Hours Minimum before Starting New Pour.
5. For Bridge Rail Reinforcing Extending into Deck, See Dwg. No. B-39.
6. For Details of Deck Reinforcing at Bridge Drains, See Dwg. No. B-43.
7. For Concrete Placement Sequence, See Dwg. No. B-36.

E-470
Engineer 470 Partnership

DIVISION OF HIGHWAYS

DECK REINFORCEMENT DETAILS

RAMP F

Designer	D. Burroughs	Structure Numbers	F-17-JX
Detailer	M. Davison		
Drawing Number	B-34 of 52	Drawings	

Revision Dates	(Preliminary Stage Only)

UDA2:[200,32]SFDKS0314.90N

STATE OF COLORADO
STATE DEPARTMENT OF HIGHWAYS
DIVISION OF HIGHWAYS:
C. H. FORM NO. 126:
REV. FEB. 1984

AS CONSTRUCTED		
NO REVISIONS ☐	REVISED ☐	VOID ☐

FED. ROAD REGION	DIVISION	PROJ. NO.	SHEET NO.	SHEET TOTALS
VIII	COLORADO	IA06/1B02	19	

REVISIONS

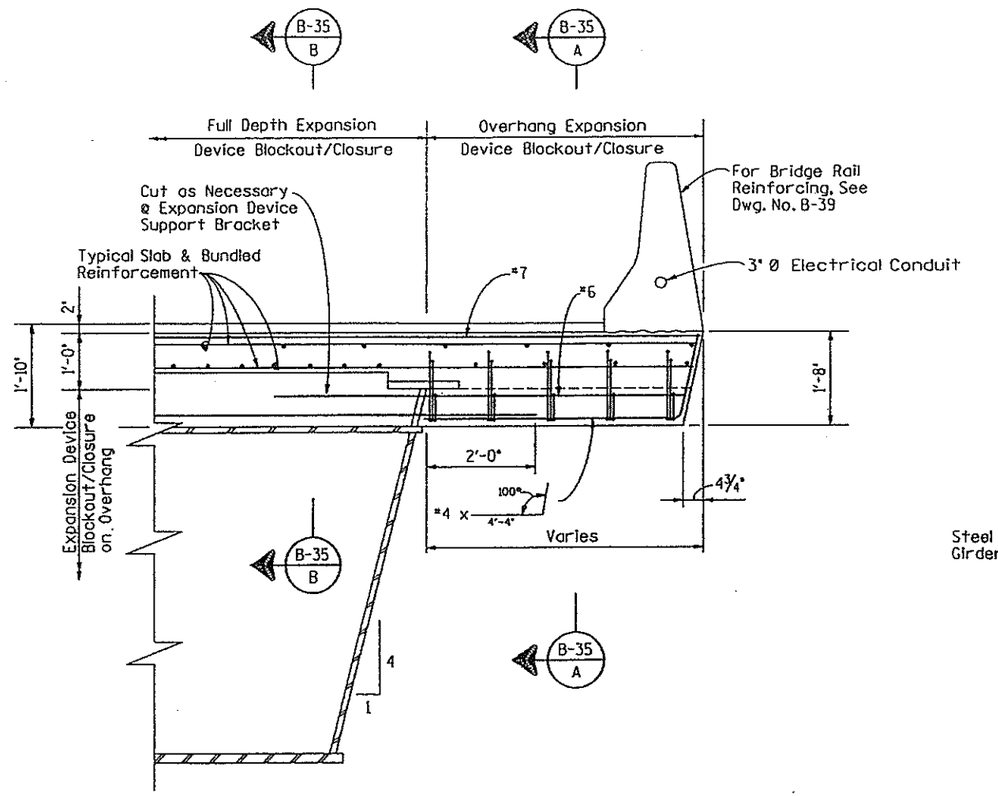

SECTION
Thickened Slab Near Expansion Device

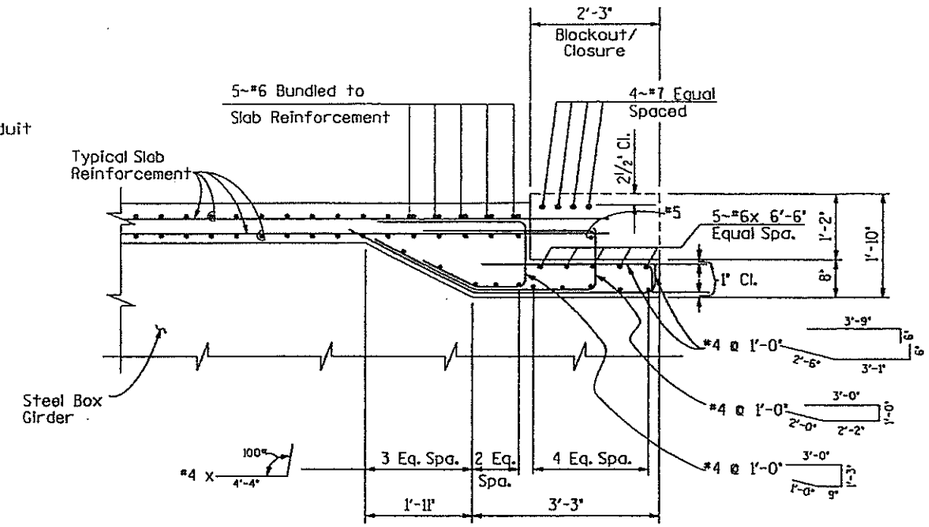

SECTION B-35 A

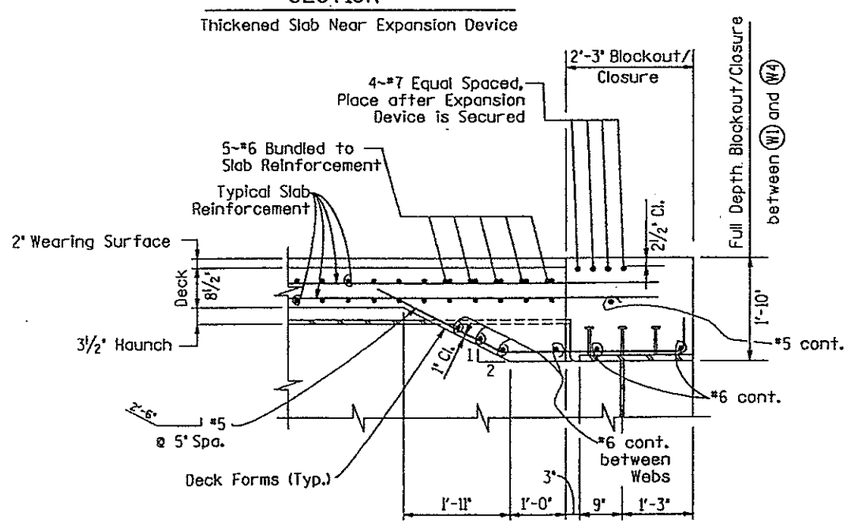

SECTION B-35 B

NOTES:

1. All dimensions are measured along the slope of the structure.
2. Expansion Device Blockout/Closure shall be Concrete Class D (Bridge).
3. For Expansion Device Details, See Dwg. No. B-37 & B-38.

INITIAL	DATE	CHECKED BY	DATE
D.K.B.	3-90	D.K.B.	3-90
		M.R.M.	3-90
		L.R.C.	3-90
		LV	3-90

DESIGNED BY	CHECKED BY	DETAILED BY
D.K.B.	3-90	M.E.D.
	3-90	3-90
	3-90	3-90

DIVISION OF HIGHWAYS

DECK REINFORCEMENT DETAILS - EXPANSION DEVICE

RAMP F

E-470
Engineer 470 Partnership

Designer	Burroughs/Stapleton	Structure Numbers	F-17-JX
Detailer	M. Davison		
Drawing Number	B-35	of	52 Drawings

Revision Dates (Preliminary Stage Only)

UDA2:[200,32]SFDKS0214.90N

STATE OF COLORADO
STATE DEPARTMENT OF HIGHWAYS
DIVISION OF HIGHWAYS
STD. M. FORM NO. 125
REV. FEB. 1984

AS CONSTRUCTED					
NO REVISIONS ☐	REVISED ☐	VOID ☐			
FED. ROAD REGION	DIVISION	PROJ. NO.	SHEET NO.	SHEET TOTALS	
VIII	COLORADO	IA06/1B62	191		

REVISIONS		

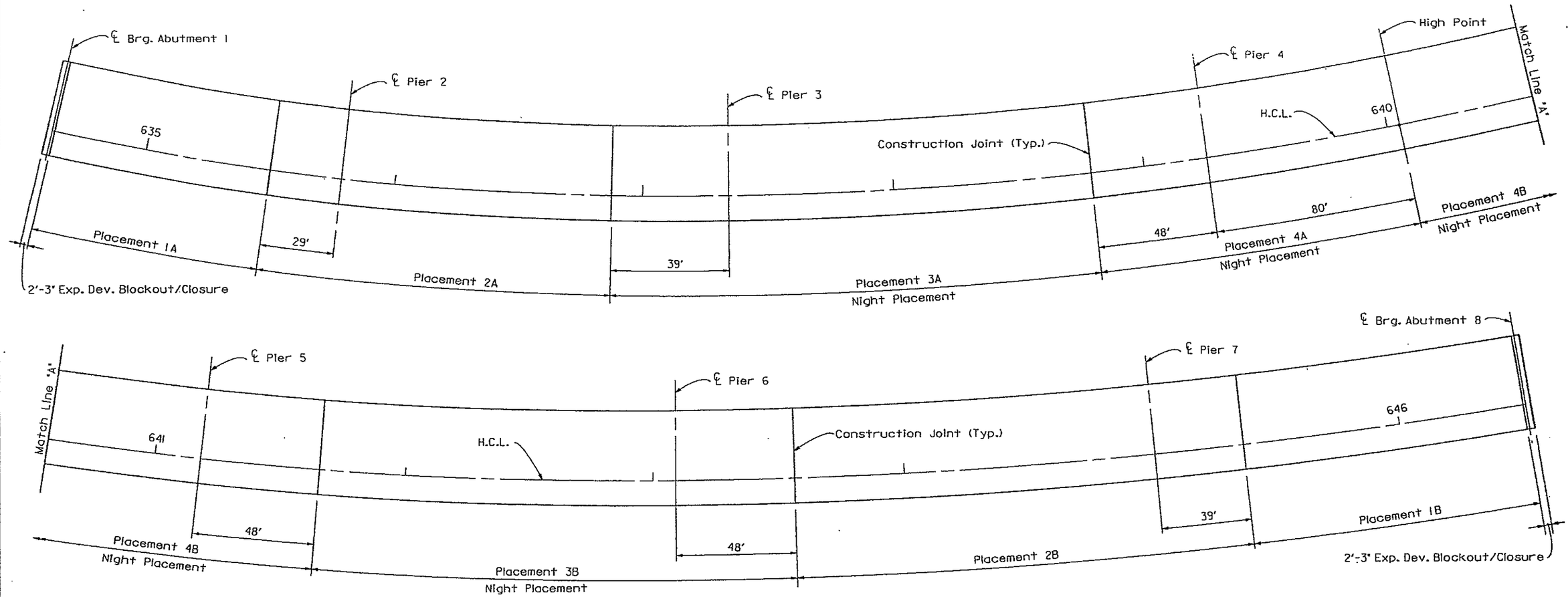

	INITIAL	DATE	CHECKED BY
DESIGNED BY	LRC/ALS	1-90	W.R.M. 3-90
CHECKED BY	W.R.M.	3-90	L.R.C. 3-90
DETAILED BY	D.L.K.	1-90	CHECKED BY
			QUANTITIES BY
			CHECKED BY

CONSTRUCTION SEQUENCE NOTES:

1. Construction of foundation and column for Pier 4 and for Pier 5 shall be such as to minimize the time required for temporary lane closures on I-25 and E-470.
2. Deck concrete shall not be placed until the entire superstructure has been erected, all field bolts torqued, and all bearing device plug welds are complete.
3. Deck slab to be poured according to slab pouring sequence shown in this drawing and the Specifications. Concrete shall be placed Low Point toward the High Point, Either starting with 1A or 1B or alternating to have Consecutive Pours.
4. Placements Over Existing Ramps and Over I-25 and E-470 Shall be at night, as per Special Provisions.
5. Removal of temporary cross frames & construction bracing shall not be done before the concrete slab has obtained its 28-day strength.

PLACEMENT SCHEDULE

E-470
Engineer 470 Partnership

DIVISION OF HIGHWAYS

CONCRETE PLACEMENT SEQUENCE

RAMP F

Designer	Creager/Stapleton	Structure Numbers	F-17-JX
Detailer	D. Kurschinski		
Drawing Number	B-36 of 52 Drawings		

LIDA2:(200,32)SFCPS0114.90M

Revision Dates (Preliminary Stage Only)

STATE OF COLORADO
STATE DEPARTMENT OF HIGHWAYS
DIVISION OF HIGHWAYS:
D.H. FORM NO. 126:
REV. FEB. 1984

AS CONSTRUCTED		
NO REVISIONS ☐	REVISED ☐	VOID ☐

FED. ROAD REGION	DIVISION	PROJ. NO.	SHEET NO.	SHEET TOTALS
VIII	COLORADO	IA06/18d2	192	

REVISIONS

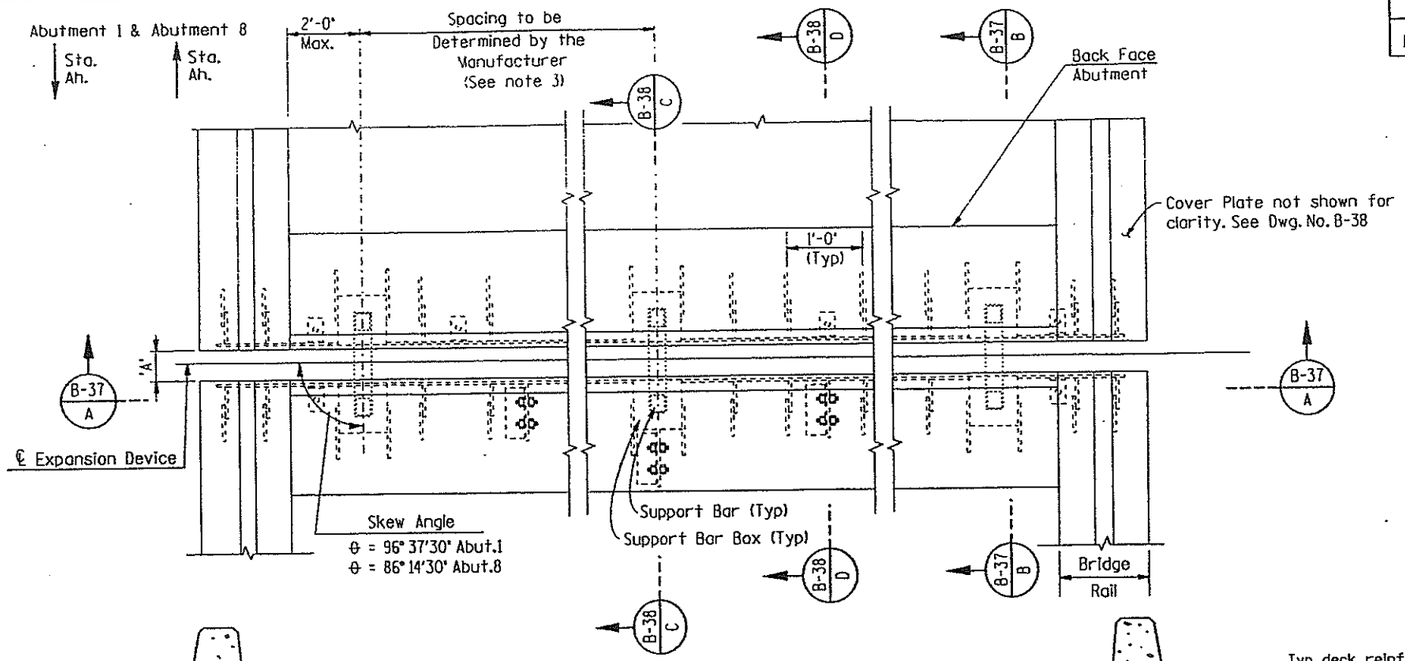

PLAN

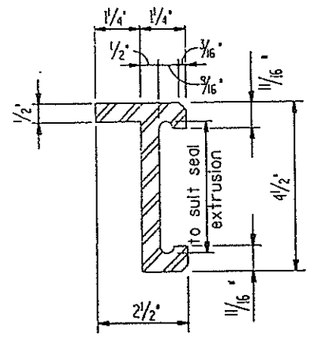

EDGE BEAM

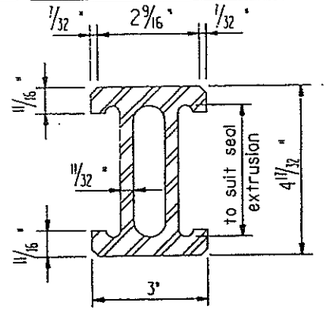

SEPARATION BEAM

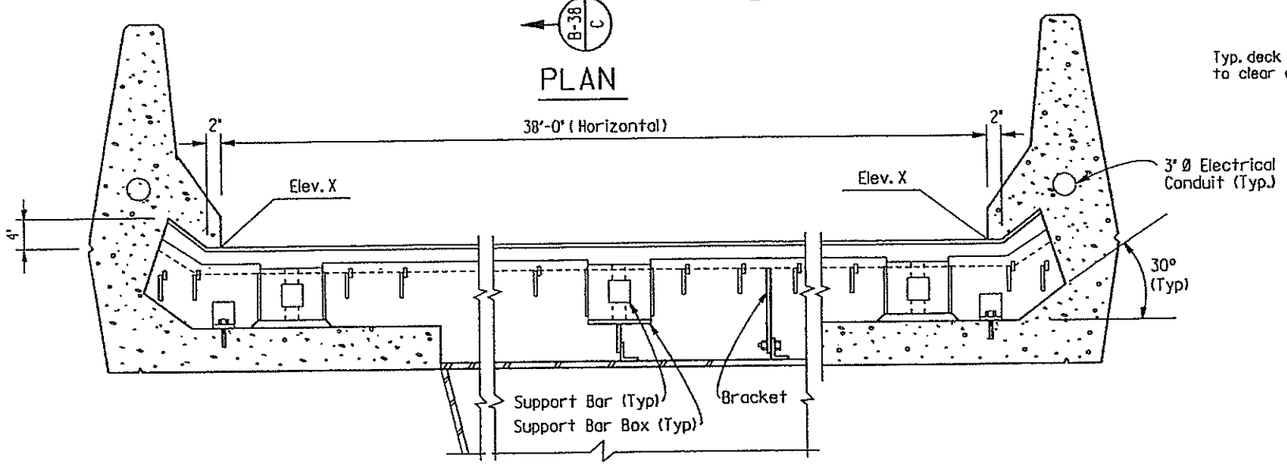

SECTION B-37/A

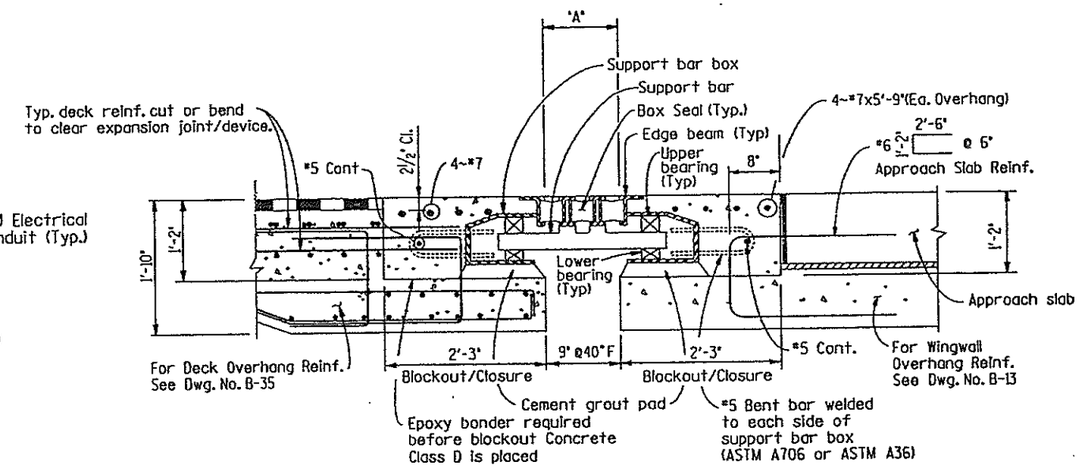

SECTION B-37/B
AT OVERHANG

ELEV. X		
Abut. 1	5929.72	5932.34
Abut. 8	5926.56	5928.42

NOTES:

1. Work this drawing with Dwg. No. B-38
2. Acceptable expansion device alternates:
   At Abutment 1: Wabo-Maurer D-900 or Maurer D.S. Brown D-241.
   At Abutment 8: Wabo-Maurer D-900 or Maurer D.S. Brown D-241.
3. Avoid Diaphragm Top Flange Splice Plates near Web 2 and Web 3. See Dwg. No. B-28 for locations.
4. Location and size of support bars, anchor assembly, anchor angle, bracket for attachment to steel and stiffener plates shall be per manufacturer's drawings.
5. The neoprene box seals shall be supplied and installed in one continuous piece.
6. For Dimension 'A' see Dwg. No. B-38
7. 'A' dimensions are dependent upon the particular expansion device supplied and shall be shown on the shop drawings. The shop drawings shall indicate the 'A' dimensions at a range of temperatures from 30°F to 100°F assuming a mid-point temperature of 40°F.
8. The expansion device shall be installed on grade, parallel to the slope and grade of the deck.
9. After the concrete has attained initial set, any temporary attachments used to hold the expansion device assembly in its proper position shall be removed.

	INITIAL	DATE
DESIGNED BY	M.R.M.	12-89
CHECKED BY	J.L.S.	3-90
DETAILED BY	D.L.K.	12-89
CHECKED BY	M.R.M.	12-89
QUANTITIES BY	L.R.C.	3-90
CHECKED BY	LV	3-90

E-470
Engineer 470 Partnership

DIVISION OF HIGHWAYS

BRIDGE EXPANSION DEVICE (0-9 INCH)

RAMP F

Designer	M. Merklinger	Structure Numbers	F-17-JX
Detailer	D. Kurschinski		

Drawing Number B-37 of 52 Drawings

Revision Dates (Preliminary Stage Only)

UDA2:[200,32]SFEXP0214.90U

ATE OF COLORADO
ATE DEPARTMENT OF HIGHWAYS
VISION OF HIGHWAYS
O. H. FORM NO. 126
V. FEB. 1984

AS CONSTRUCTED			FED. ROAD REGION	DIVISION	PROJ. NO.	SHEET NO.	SHEET TOTALS
NO REVISIONS ☐	REVISED ☐	VOID ☐	VIII	COLORADO	IA06/1842	193	

REVISIONS

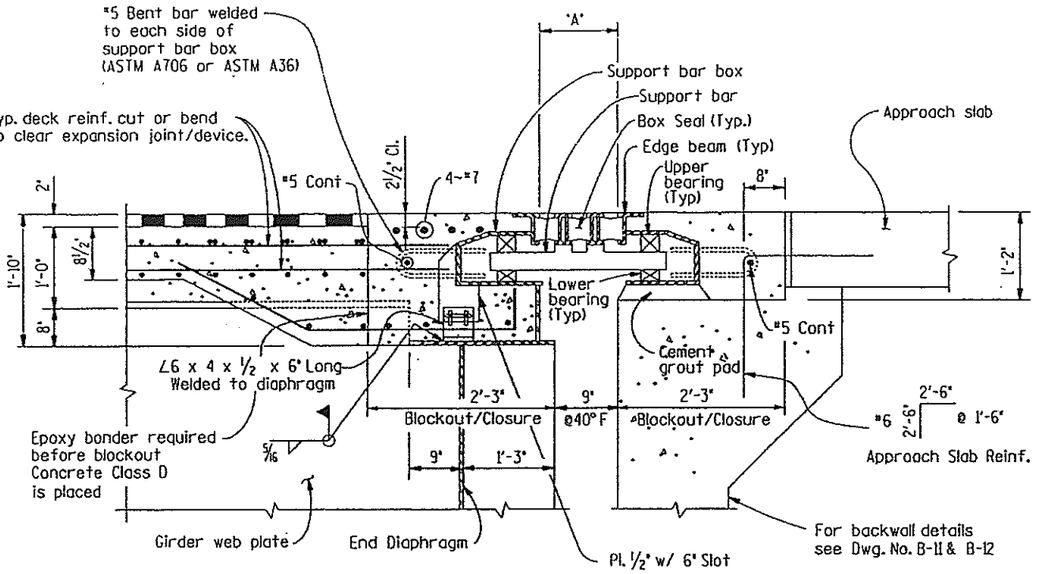

SECTION B-37 C

AT STEEL DIAPHRAGM

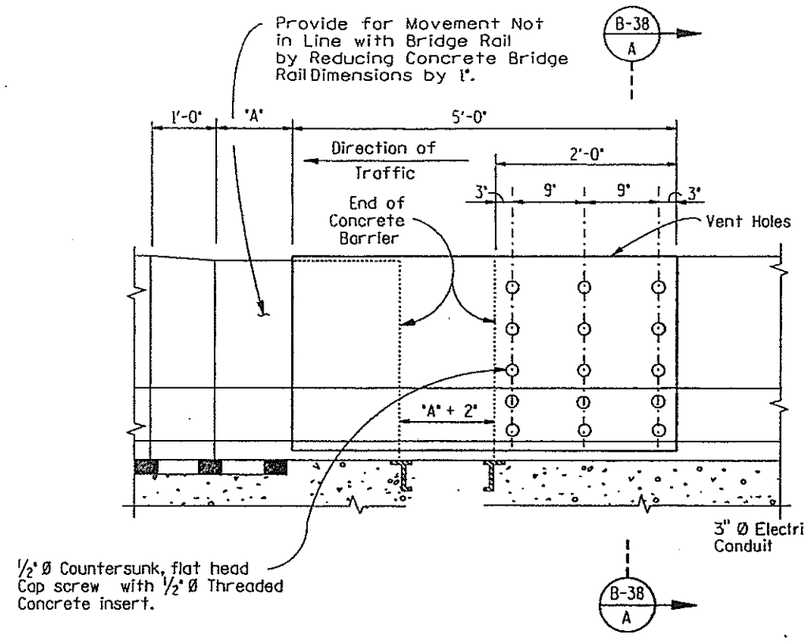

ELEVATION ~ RIGHT RAIL

Inside face of Bridge Rail Cover Plate.
Cover Plate at Abutment 1 shown, Abutment 8 similar.

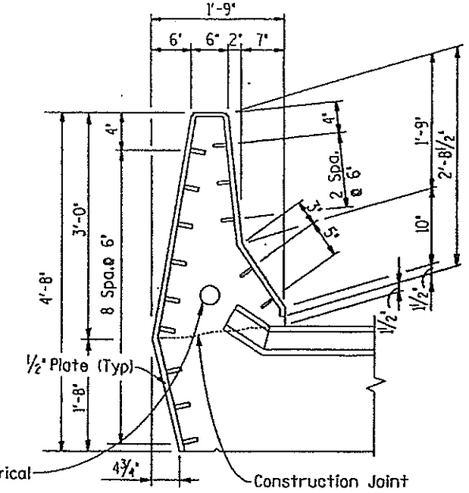

SECTION B-38 A

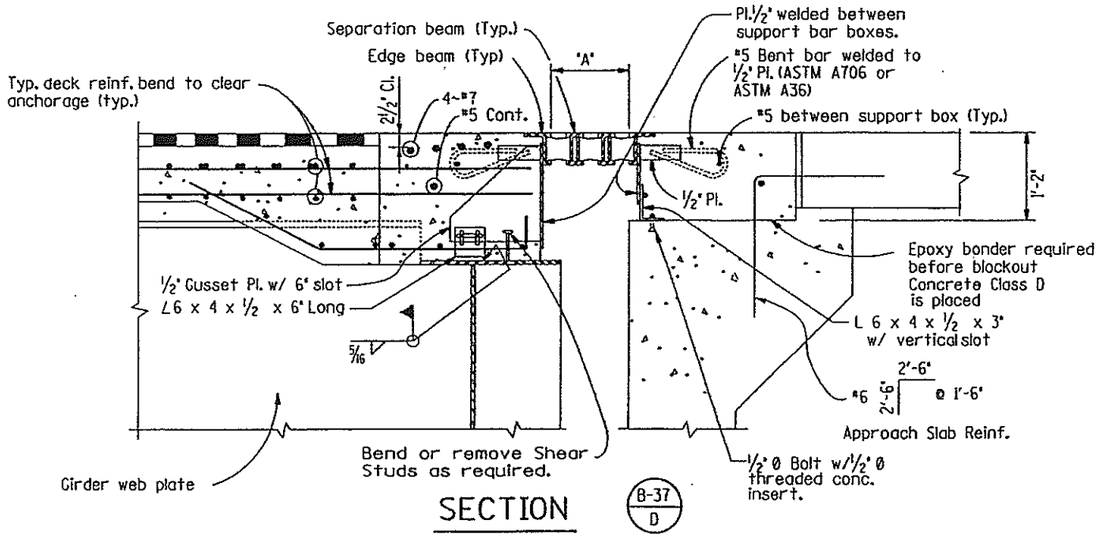

SECTION B-37 D

AT STEEL DIAPHRAGM

Dimension "A"		
STRUCTURE TEMP.	ABUTMENT 1	ABUTMENT 8
30° F.	11⅛"	11⅛"
40° F.	10½"	10½"
50° F.	9⅞"	9⅞"
60° F.	9¼"	9¼"
70° F.	8¾"	8¾"
80° F.	8⅛"	8⅛"
90° F.	7½"	7½"
100° F.	6⅞"	6⅞"

NOTES:

1. Cover Plates and related work shall not be paid for separately, but shall be included in payment for Item 518.
2. Cover Plate assembly shall be galvanized after fabrication.
3. Cover Plates require colored coating, See Specifications

DESIGNED BY	INITIAL	DATE	CHECKED BY	M.R.M.	12-89
CHECKED BY	M.R.M.	12-89	QUANTITIES BY	LRC	3-90
DETAILED BY	D.L.K.	12-89	CHECKED BY	LV	3-90

DIVISION OF HIGHWAYS

BRIDGE EXPANSION DEVICE (0-9 INCH)

RAMP F

E-470 Engineer 470 Partnership

Designer	M. Merklinger	Structure Numbers	F-17-JX
Detailer	D. Kurschinski		
Drawing Number	B-38 of 52	Drawings	

Revision Dates (Preliminary Stage Only)

UDA2:[200,32]SFRAL0214.90V

OK-FEB-1990 10:19
/usr/dcco/e470/rampt/stral

STATE OF COLORADO
STATE DEPARTMENT OF HIGHWAYS
DIVISION OF HIGHWAYS
S. H. FORM NO. 126
REV. FEB. 1984

AS CONSTRUCTED
NO REVISIONS ☐ REVISED ☐ VOID ☐

FED. ROAD REGION	DIVISION	PROJ. NO.	SHEET NO.	SHEET TOTALS
VIII	COLORADO	1A06/1B92	194	

REVISIONS		

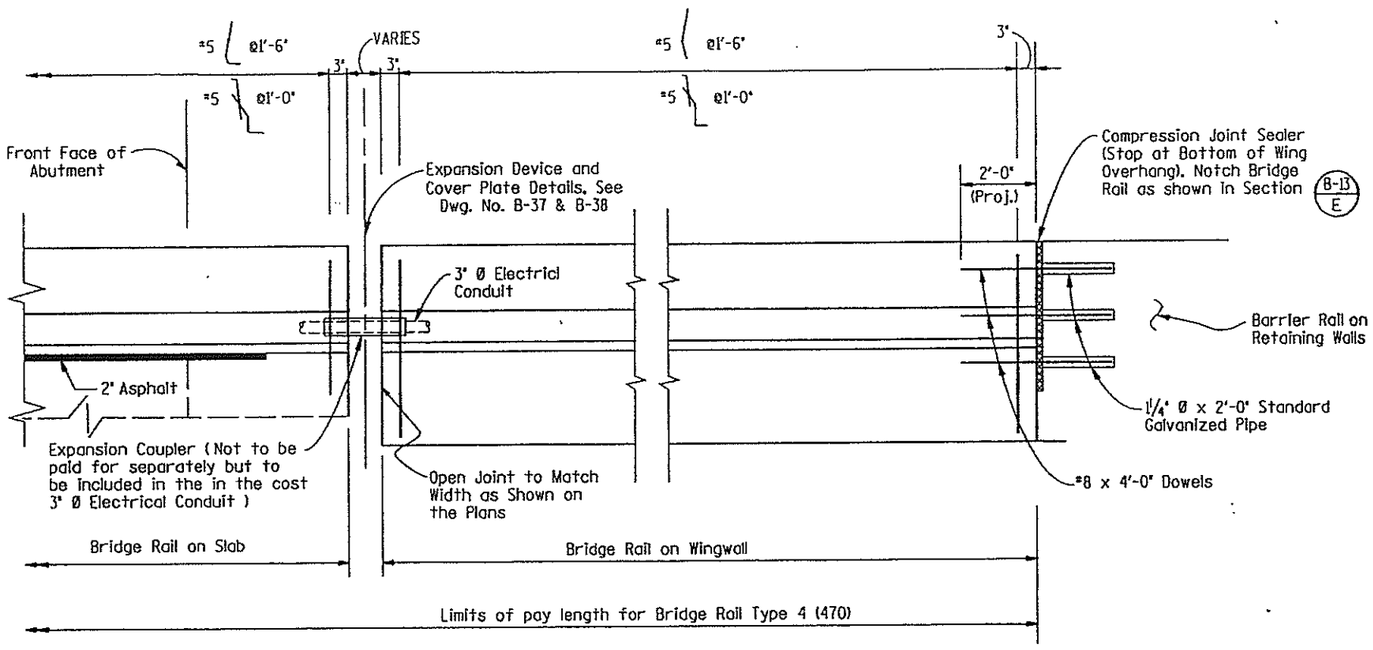

ELEVATION

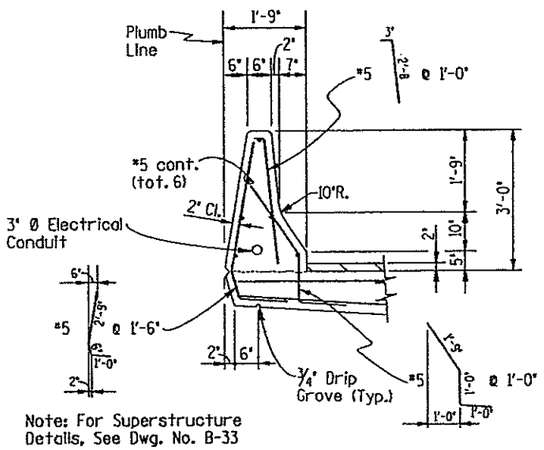

Note: For Superstructure Details, See Dwg. No. B-33

ON CONCRETE SLAB WITH ASPHALT

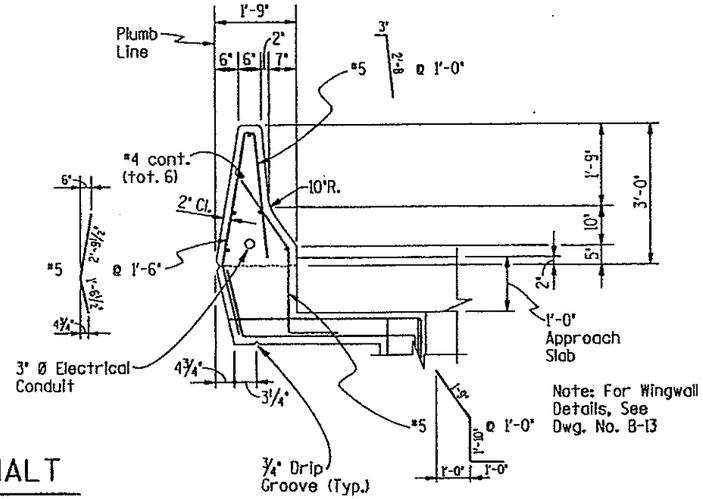

Note: For Wingwall Details, See Dwg. No. B-13

ON WINGWALL

NOTES:

1. Back fill wingwalls before barrier is placed.
2. All bridge rail concrete shall be Concrete Class D.
3. Longitudinal reinforcement shall stop at all expansion joints.
4. Bridge rail shall be constructed plumb, as shown.
5. Bridge rail Concrete Class D and bridge rail reinforcement shall be included in Item No. 606, Bridge Rail Type 4 (470).
6. For Guard Rail Type 4, see Std. M-606-12 for details.
7. For Guard Rail Type 3, see Std. M-606-12 for details of transition and attachment to concrete barrier. See Std. M-606-1 for details of Guard Rail.

Information Only

Description	Unit	Per Unit
Concrete Class D	Cu.Yd.	0.13
Reinf. Steel (Epoxy Coated)	lb.	15.07

	DESIGNED BY	CHECKED BY	DETAILED BY	CHECKED BY
INITIAL	LRC	LRC	JLS	LV
DATE	1-90	3-90	1-90	3-90

DIVISION OF HIGHWAYS

BRIDGE RAIL TYPE 4 (470)

RAMP F

E-470 Engineer 470 Partnership

Designer	L. R. Creager	Structure Numbers	F-17-JX
Detailer	M. E. Davison		
Drawing Number	8-39 of 52 Drawings		

Revision Dates (Preliminary Stage Only)

/usr/dacc/e470/ramp1f/sfral0114.90v
15-MAR-1990 00:41

UDA2:[200.32]SFRAL0114.90V

STATE OF COLORADO
STATE DEPARTMENT OF HIGHWAYS
DIVISION OF HIGHWAYS:
D. O. H. FORM NO. 126:
REV. FEB. 1984

AS CONSTRUCTED

NO REVISIONS ☐ REVISED ☐ VOID ☐

FED. ROAD REGION	DIVISION	PROJ. NO.	SHEET NO.	SHEET TOTALS
VIII	COLORADO	1A06 /1802	195	

155

	REVISIONS		
A-1	4-2-90	Pier 2 Plug Welds	M.R.M.

VALUES FOR ONE BEARING DEVICE

Location	Qty.	FX GD EXP	Angle θ (Degrees)	Vertical Load (Kips) Perm. D.L.	Vertical Load (Kips) Max. Load	Horizontal Load (Kips) Longit.	Horizontal Load (Kips) Transv.	Longitudinal Movement (Inches)	Initial Longitudinal Offset (Inches)	Conc. Girder No. Studs	Steel Girder Plug Welds No.	Steel Girder Plug Welds Size	Longitudinal Rotation (D.L. + S.I.D.L.) (Radians)	X-Slope % + Looking Sta. Ah'd.	Grade % + Sta. Ah'd.	Masonry Base Plate C	Masonry Base Plate D	Anchor Bolts Size	Anchor Bolts No.	Anchor Bolts Type	Top Plate Sole Plate A	Top Plate Sole Plate B	Base Pot I.D.	Height H
Abut. 1, Left	1	GD	96° 37' 30"	220	390	0	39	6⅜	See Table		6	1½"	.0031	7.245	2.572	17"	17"	1¼"	4	A-325	24"	26"	11.9"	10.5"
Abut. 1, Right	1	EXP	90° 00' 00"	240	450	0	0	6⅜			6	1½"	.0033	6.900	3.391	18.5"	18.5"	1¼"	4	A-325	24"	26"	12.8"	10.5"
Pier 2, Left	1	GD	94° 25' 30"	700	1200	0	120	5⅛			6	2"	-.0002	6.940	2.138	30"	30"	2"	4	A-449	24"	30.5"	20.9"	10.5"
Pier 2, Right	1	EXP	90° 00' 00"	700	1200	0	0	5⅛			6	2"	-.0002	6.755	2.667	30"	30"	2"	4	A-449	24"	30.5"	20.9"	10.5"
Pier 3	2	FX	90° 00' 00"	910	1470	147		0			6	2"	.0015	6.301	1.693	33"	33"	2"	4	A-449	24"	26"	23.1"	10.5"
Pier 4	2	FX	90° 00' 00"	1020	1610	161		0			6	2"	-.0004	6.300	0.500	34.75"	34.75"	2"	4	A-449	24.7"	26"	24.2"	10.5"
Pier 5	2	FX	90° 00' 00"	990	1580	158		0			6	2"	.0001	6.300	-0.700	34.25"	34.25"	2"	4	A-449	24.5"	26"	24.0"	10.5"
Pier 6	2	FX	90° 00' 00"	990	1580	158		0			6	2"	-.0001	5.056	-1.892	34.25"	34.25"	2"	4	A-449	24.5"	26"	24.0"	10.5"
Pier 7, Left	1	GD	87° 22' 00"	990	1550	0	155	4⅞			6	2"	.0000	5.036	-2.853	34"	34"	2"	4	A-449	24.3"	33.2"	23.8"	10.5"
Pier 7, Right	1	EXP	90° 00' 00"	970	1550	0	0	4⅞			6	2"	.0001	4.900	-3.081	34"	34"	2"	4	A-449	24.3"	33.2"	23.8"	10.5"
Abut. 8, Left	1	GD	86° 14' 30"	260	470	0	47	6½			6	1½"	-.0047	5.153	-3.687	19"	19"	1¼"	4	A-325	24"	26"	13.1"	10.5"
Abut. 8, Right	1	EXP	90° 00' 00"	290	530	0	0	6½			6	1½"	-.0048	4.900	-4.017	20"	20"	1¼"	4	A-325	24"	26"	13.9"	10.5"

A-1

NOTES:

All structural steel for the bearing devices, including sole plates, top plates and masonry plates, shall be AASHTO M-183 (ASTM A36) unless otherwise shown.

Anchorages shall be included in bid price for Item No. 512 Bearing Device (Type III).

Bearing seat elevations at abutments and piers shall be checked and adjusted according to the final dimensions of bearing assemblies adopted.

Bearing assemblies shall be constructed so as to permit removal for repair or replacement by jacking the bridge from the seat by ¼".

Without alteration of connector sizes and locations, the contractor may propose using other similar bearings which meet the requirements on this drawing and in the special provisions, subject to the engineer's approval. 'H' shall be at least 7".

The longitudinal movement tabulated is based on a total temperature change of 140°F (70°F rise and 70°F drop from a mean termperature of 40°F) and effect due to prestress, shrinkage and creep, if concrete girder. The bearing device shall have a minimum of 2" additional movement capacity longitudinally each way from centerline of base pot.

All surfaces of structural steel components not connected to stainless steel, T.F.E. or elastomer shall be completely zinc metalized in accordance with AWS C.2.2. latest issue, to a minimum thickness 8 mils on exposed surfaces and 3 mils on protected surfaces.

Keyway shown in Section B is schematic. Contractor may supply side guide bars as alternate.

Side guide bars must bear only against upper elements and not against lower element (Base Pot)

Anchor bolts may be set, either in the wet concrete of bearing seat or placed within a formed cylindrical void 4" in diameter and then grouted with high strength non-shrink or epoxy grout.

ASTM A354 GrBC, or A354 GrBD, or A449, or A490, or A687 may be substituted for ASTM A325 anchor bolts. ASTM A354 GrBC, or A354 GrBD, or A687 may be substituted for ASTM A449 anchor bolts.

Fixed Bearing Devices shall be plug welded when the structure temperature is between 30° and 60° F.

Jacking for bearing device replacement shall be one bearing device at a time. Jacking locations shall be as shown on substructure drawings. No live load is allowed during jacking.

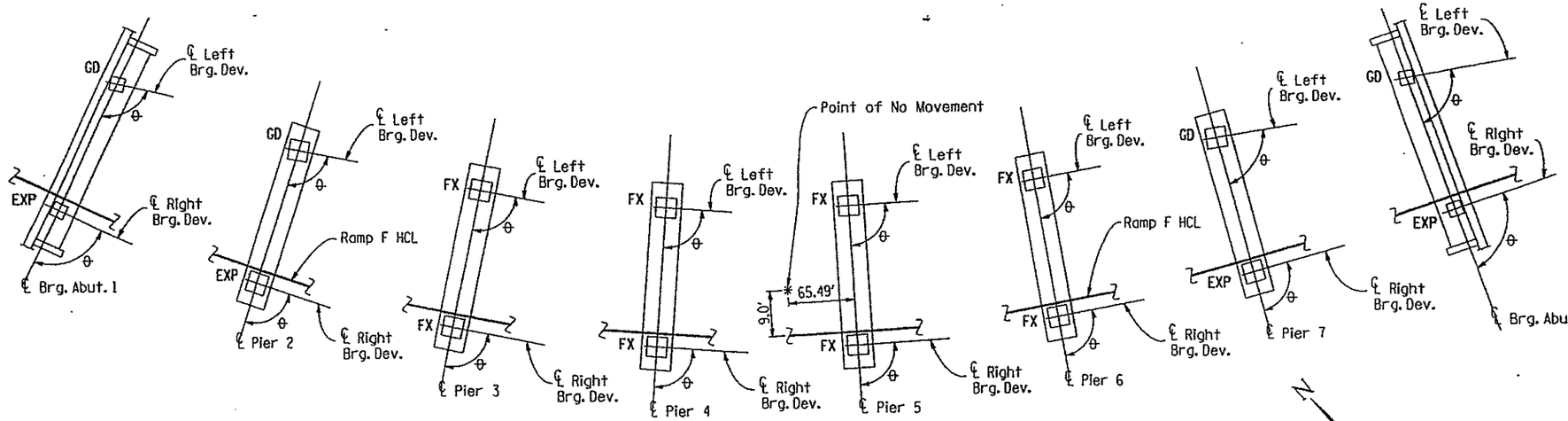

PLAN OF BEARINGS

Bearing Devices:

FX = Fixed
GD = Guided
EXP = Multi-Directional Floating

INITIAL	DATE
DESIGNED BY M. R. M.	12-89
CHECKED BY QUANTITIES BY	M.R.M. 12-89
DETAILED BY D.L.K.	CHECKED BY D.L.K. 12-89

28-MAR-1990 15:12
/usr/dcoa/e470/ramp1/sfbrg0114.901

E-470
Engineer 470 Partnership

DIVISION OF HIGHWAYS

BEARING DEVICE (TYPE III)

RAMP F

Designer	M. Merklinger	Structure Numbers	F-17-JX
Detailer	Kurschinski/Shibao		
Drawing Number	B-40 of		Drawings

Revision Dates (Preliminary Stage Only)

UDA2:[SFBRG0114.90T

STATE OF COLORADO
STATE DEPARTMENT OF HIGHWAYS
DIVISION OF HIGHWAYS:
S. H. FORM NO. 126:
REV. FEB. 1984

AS CONSTRUCTED			
NO REVISIONS ☐	REVISED ☐	VOID ☐	

FED. ROAD REGION	DIVISION	PROJ. NO.	SHEET NO.	SHEET TOTAL
VIII	COLORADO	IA06/1B82	196	

REVISIONS		

INITIAL	DATE	DESIGNED BY	
M.R.M.	12-89	CHECKED BY	
		QUANTITIES BY	
D.L.K.	12-89	CHECKED BY	

INITIAL LONGITUDINAL OFFSET				
Str. Temp.	Abut. 1	Pier 2	Pier 7	Abut. 8
30° F	+ ½"	+ ⅜"	- ⅜"	- ½"
40° F	0"	0"	0"	0"
50° F	- ½"	- ⅜"	+ ⅜"	+ ½"
60° F	- ⅞"	- ¾"	+ ¾"	+ ⅞"
70° F	- 1⅜"	- 1⅛"	+ 1"	+ 1⅜"
80° F	- 1⅞"	- 1½"	+ 1⅜"	+ 1⅞"

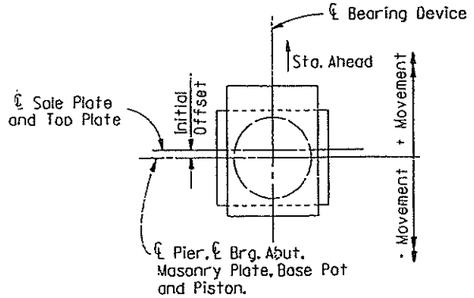

INITIAL OFFSET

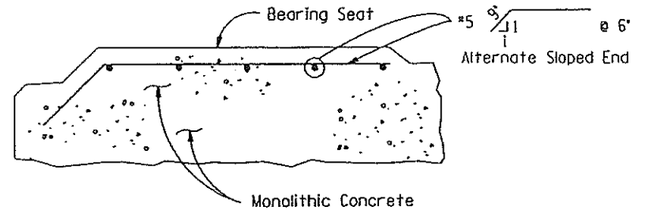

ALTERNATE BEARING SEAT

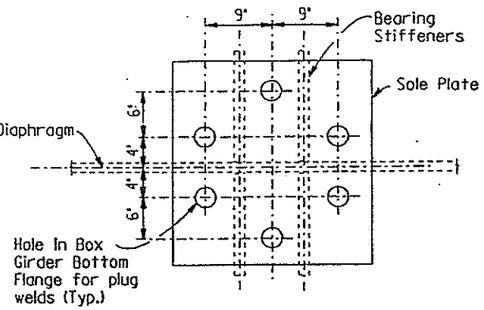

PLAN OF SOLE PLATE

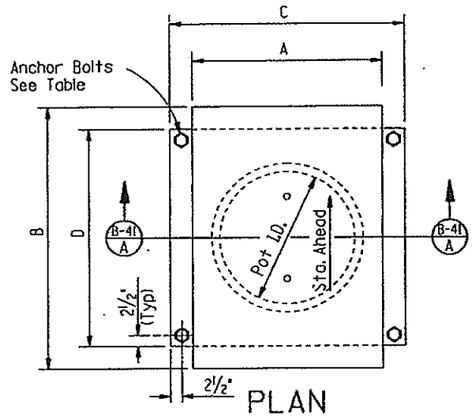

PLAN

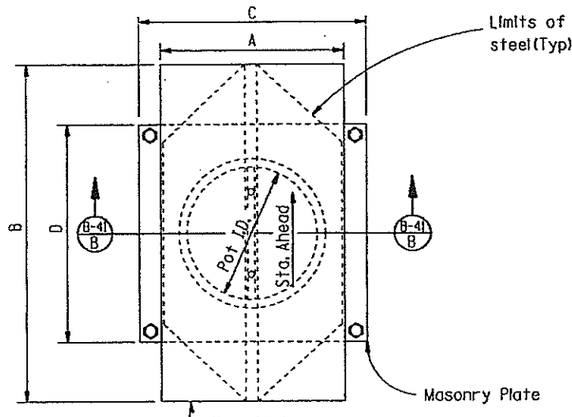

PLAN

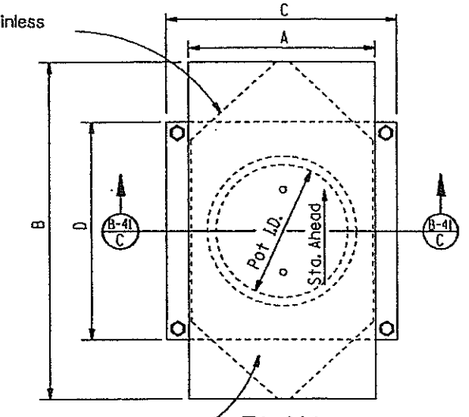

PLAN

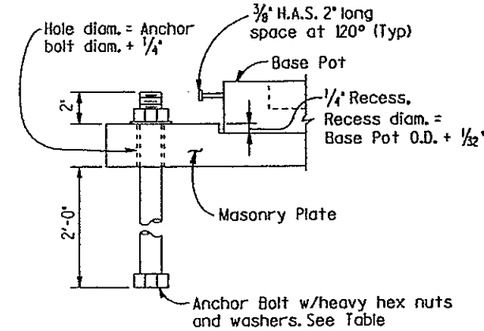

ANCHOR BOLT DETAIL

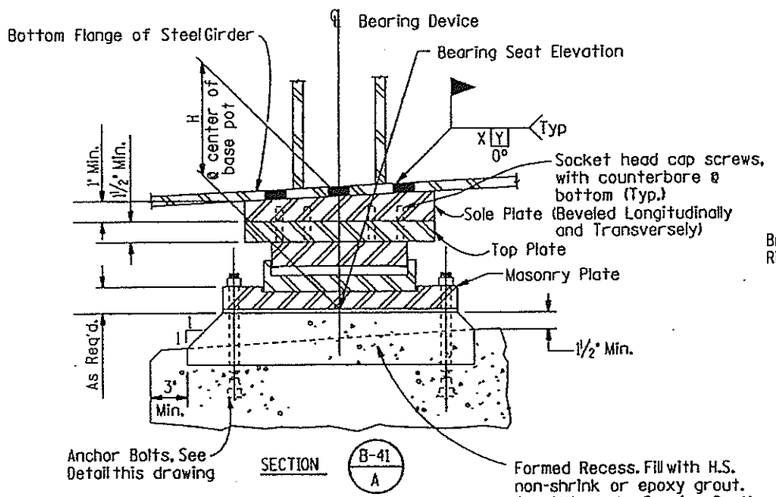

FIXED BEARING (FX)

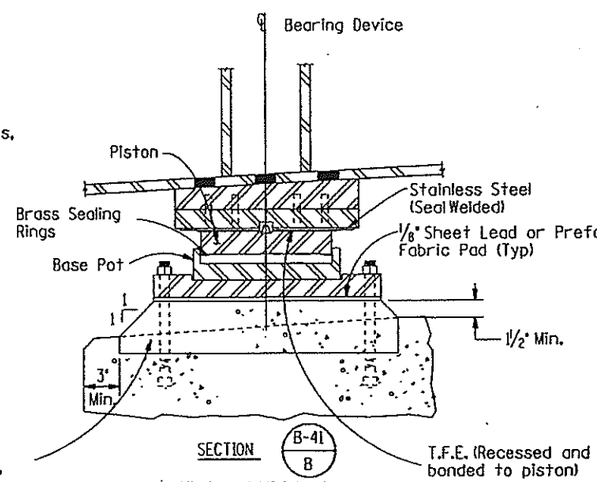

UNI-DIRECTIONAL GUIDED EXPANSION BEARING (GD)

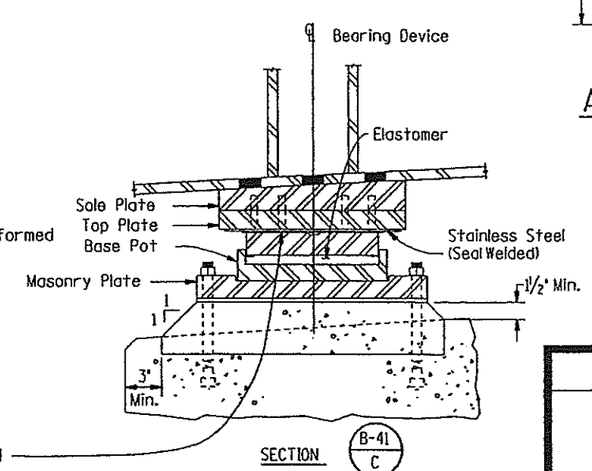

MULTI-DIRECTIONAL FLOATING EXPANSION BEARING (EXP)

E-470
Engineer 470 Partnership

DIVISION OF HIGHWAYS

BEARING DEVICE
(TYPE III)

RAMP F

Designer	M. Merklinger	Structure Numbers	F-17-JX
Detailer	D. Kurschinski		
Drawing Number	B-41	of 52	Drawings

Revision Dates						(Preliminary Stage Only)					

02-FEB-1990 09:58
/usr/dcoe/e470/rampf/afbrg

512-3B

UDA2:[200,32]SFBRG0214.90T

STATE OF COLORADO
STATE DEPARTMENT OF HIGHWAYS
DIVISION OF HIGHWAYS
C. D. H. FORM NO. 126
REV. FEB. 1984

AS CONSTRUCTED			
NO REVISIONS ☐	REVISED ☐	VOID ☐	

FED. ROAD REGION	DIVISION	PROJ. NO.	SHEET NO.	SHEET TOTALS
VIII	COLORADO	1A06/18ø2	197	

REVISIONS		

	INITIAL	DATE
DESIGNED BY	M.R.M.	1-90
CHECKED BY		
QUANTITIES BY	D.L.K.	1-90
CHECKED BY		
DETAILED BY		
CHECKED BY		

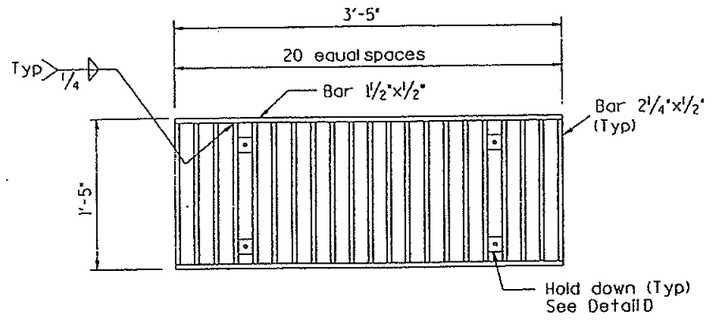

GRATING PLAN

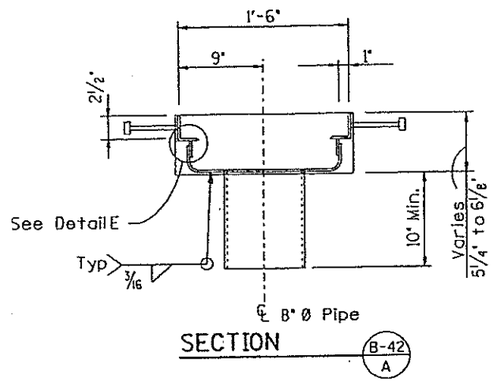

SECTION B-42 A

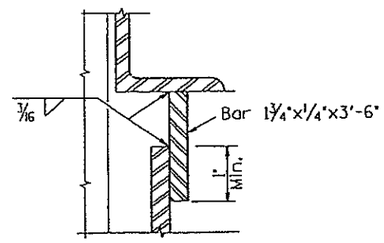

DETAIL E

NOTES:

1. All pipes to be 8"x 0.322 welded steel pipe, ASTM A53 Grade B, except as noted. Fittings and bends shall have a minimum wall thickness of 1/4".
2. All joints and/or connections shall be butt-welded or connected by a pipe sleeve and shall be smooth throughout inside of pipe.
3. All bends shall be on a 2'-6" minimum radius measured along centerline of pipe. All bends shall be smooth.
4. Fabricated deck drains, 8" diameter pipes, and pipe supports shall be galvanized after fabrication.
5. All steel plates, bars and shapes shall conform to AASHTO M-183 (ASTM A36) Unless otherwise noted. All anchor bolts shall conform to ASTM A307.
6. It is estimated 167 L.F. (total) of drain pipe will be required for Piers 3 & 6. All work and materials to be paid for under Item 513, Bridge Drain (Special).

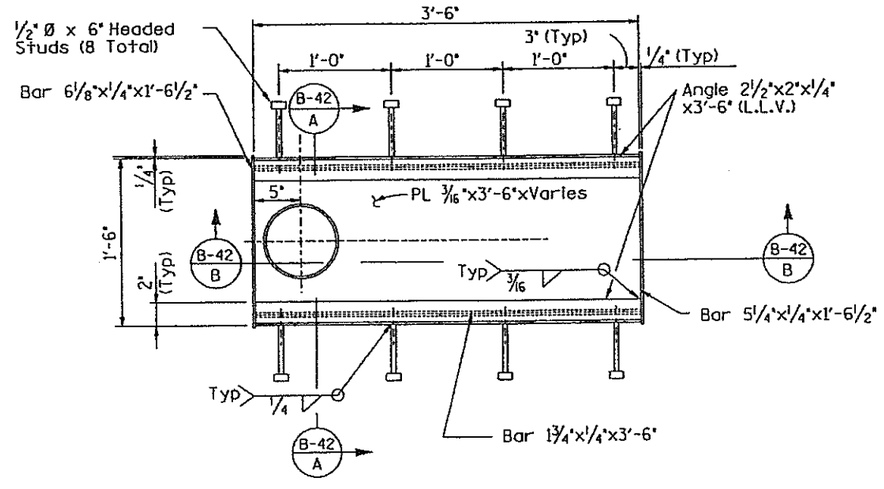

PLAN

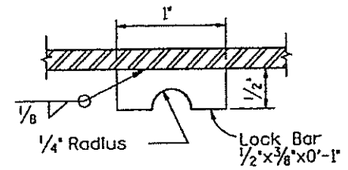

LOCK BAR DETAIL F

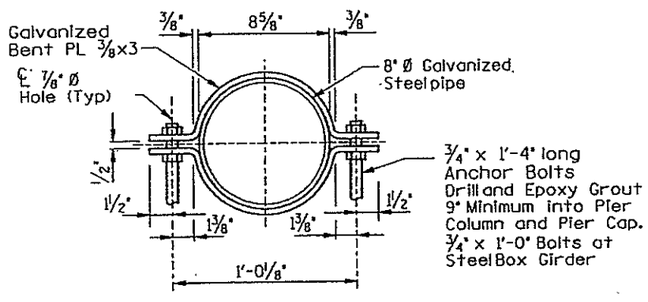

DRAIN PIPE CLAMP DETAIL

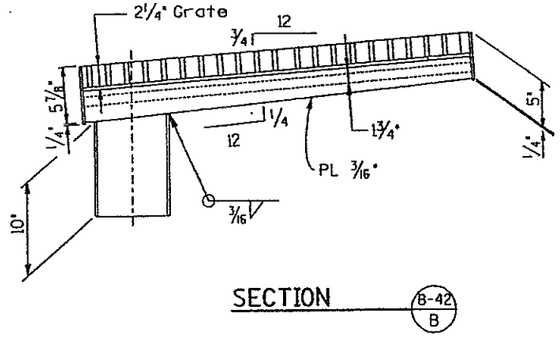

SECTION B-42 B

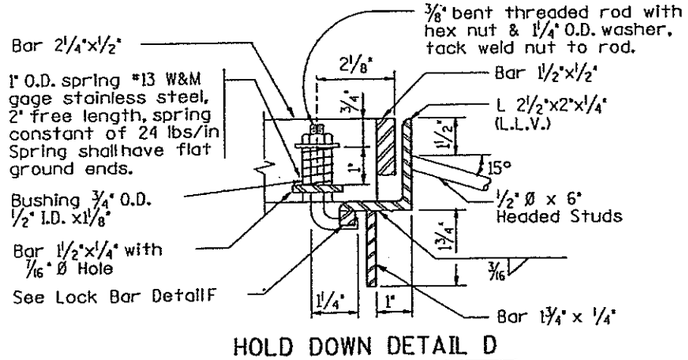

HOLD DOWN DETAIL D

E-470
Engineer 470 Partnership

DIVISION OF HIGHWAYS

BRIDGE DRAIN (SPECIAL)

RAMP F

Designer	M.Merklinger	Structure Numbers	F-17-JX
Detailer	D. Kurschinski		
Drawing Number	B-42 of 52	Drawings	

Revision Dates (Preliminary Stage Only)

UDA2:[200.32]SFDRN0113.90X

AS CONSTRUCTED						
NO REVISIONS ☐	REVISED ☐	VOID ☐				
FED. ROAD REGION	DIVISION	PROJ. NO.	SHEET NO.	SHEET TOTALS		
VIII	COLORADO	1A06/1802	198			

REVISIONS			
A-1	4-2-90	Outlet Details	M.R.M.

	INITIAL	DATE
DESIGNED BY	M.R.M.	1-90
CHECKED BY	QUANTITIES BY	CHECKED BY
DETAILED BY	D.L.K.	1-90

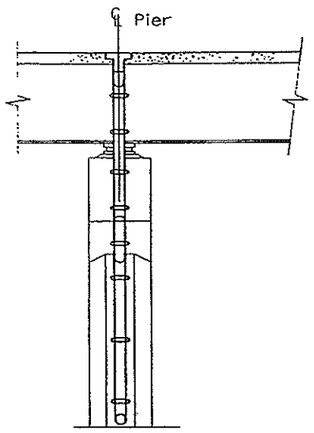

SECTION B-43 A

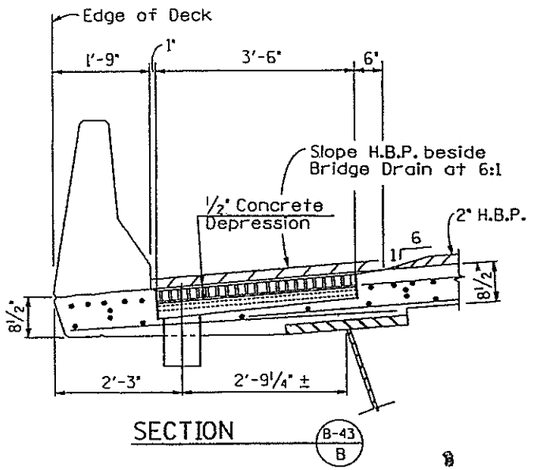

SECTION B-43 B

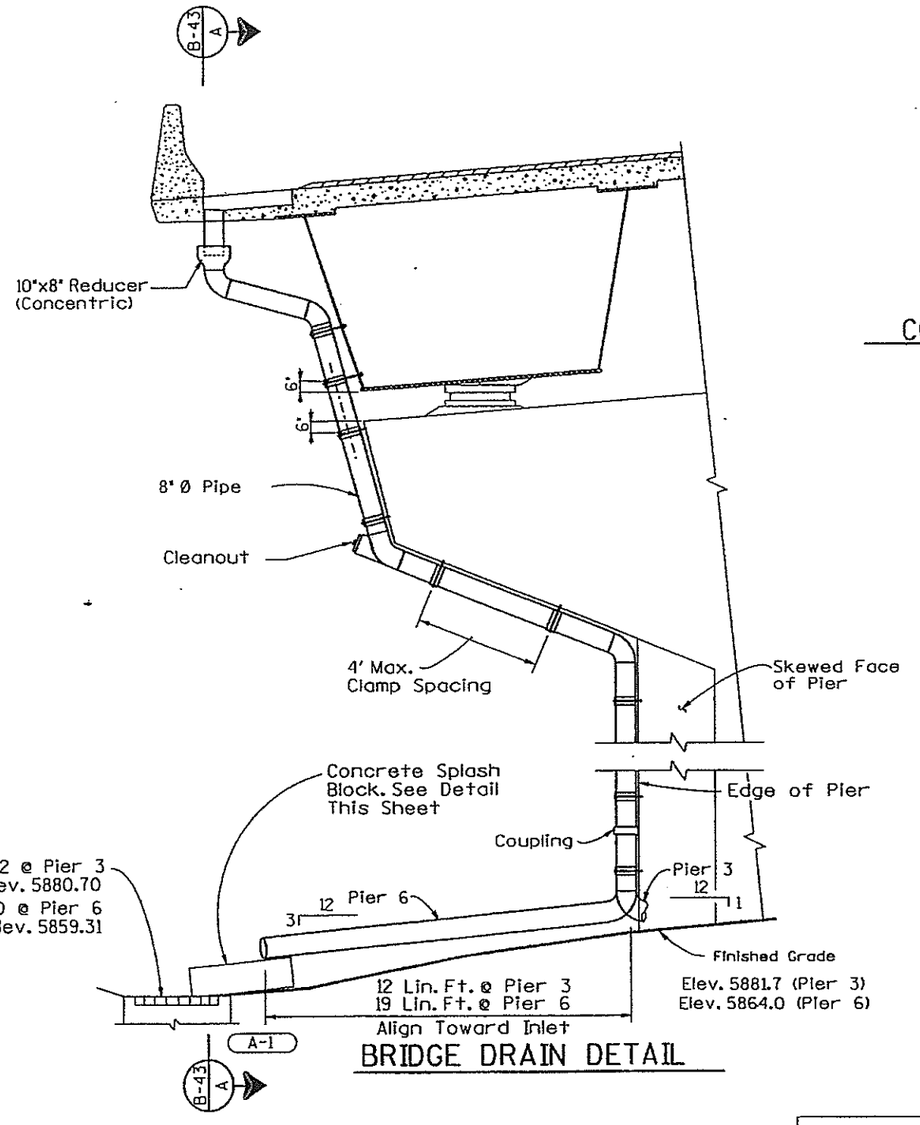

BRIDGE DRAIN DETAIL

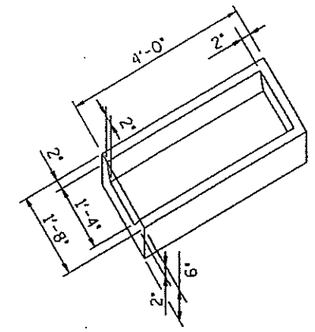

CONCRETE SPLASH BLOCK DETAIL

NOTES:

1. All pipes shall be supported at 4'-0" max. spacing.
2. Maximum of two mechanical couplings may be used at each pier. Mechanical coupling locations and details shall be shown on the shop drawings.
3. All galvanized metal surfaces to be painted shall be blast cleaned and chemically treated as indicated in the specifications.
4. All visible metal surfaces for bridge drains and 8" diameter pipes shall be painted to match existing concrete surfaces.
5. Paint shall be a two-coat urethane system, or an epoxy mastic-urethane system as indicated in the specifications.
6. Bridge Drain required at the following locations: Pier 3 & Pier 6 at inside Shoulder.
7. Space Bridge Rail Reinf. to avoid Deck Drain.

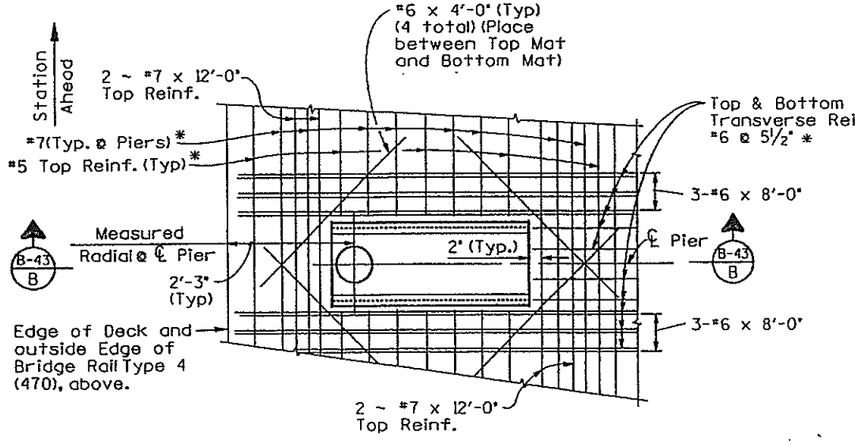

DECK REINFORCING FOR BRIDGE DRAIN

* Deck Reinforcement detailed on Dwg. No. B-33 & B-34. Longitudinal Bottom Reinf. not shown for clarity.

E-470
Engineer 470 Partnership

DIVISION OF HIGHWAYS

BRIDGE DRAIN (SPECIAL)

RAMP F

Designer	M. Merklinger	Structure Numbers	F-17-JX
Detailer	D. Kurschinski		
Drawing Number	B-43 of	Drawings	

Revision Dates	(Preliminary Stage Only)

28-MAR-1990 16:15
/usr/dcco/e470/ramp1/sfdrn0213.90x

U0A2:[200.32]SFDRN0213.90X

STATE OF COLORADO
STATE DEPARTMENT OF HIGHWAYS
DIVISION OF HIGHWAYS
C.D.H. FORM NO. 126
REV. FEB. 1984

AS CONSTRUCTED

NO REVISIONS ☐ REVISED ☐ VOID ☐

FED. ROAD REGION	DIVISION	PROJ. NO.	SHEET NO.	SHEET TOTALS
VIII	COLORADO	1A06/1B62	199	

REVISIONS

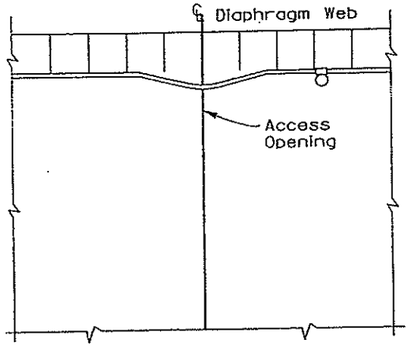

SECTION (B-44 / A)

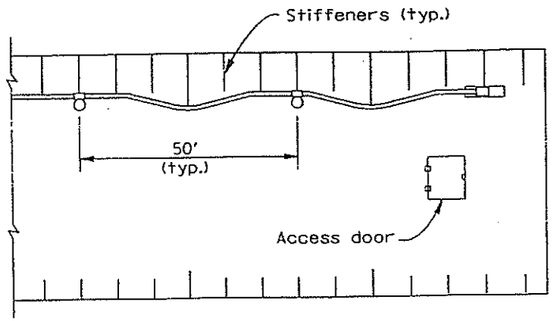

PLAN

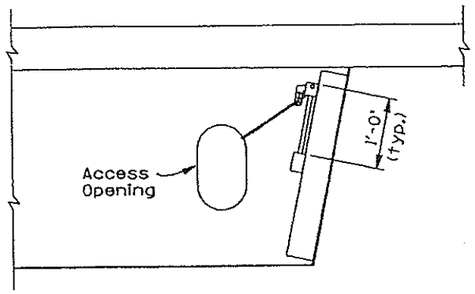

SECTION (B-44 / B)

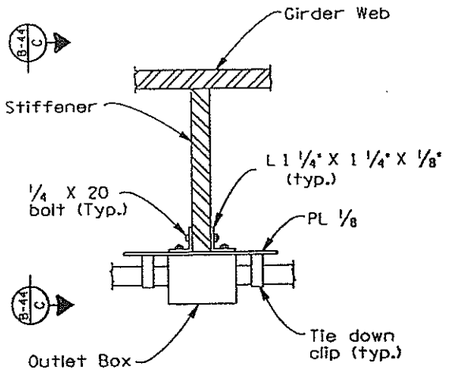

PLAN

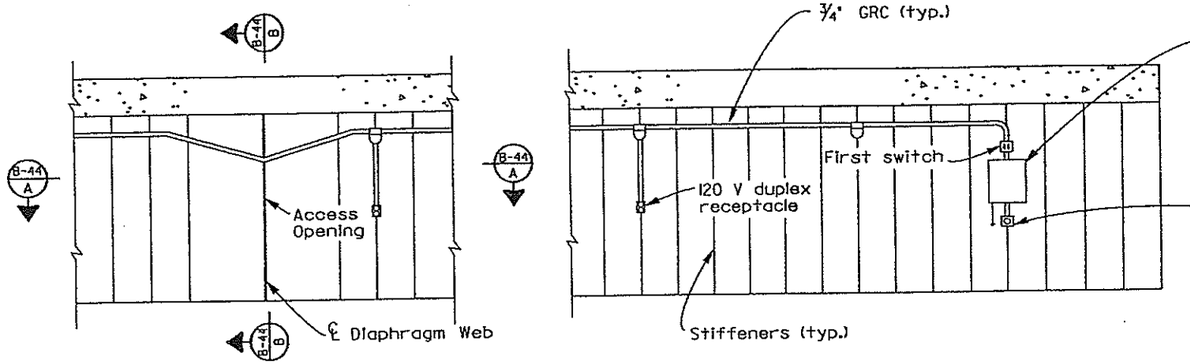

ELEVATION

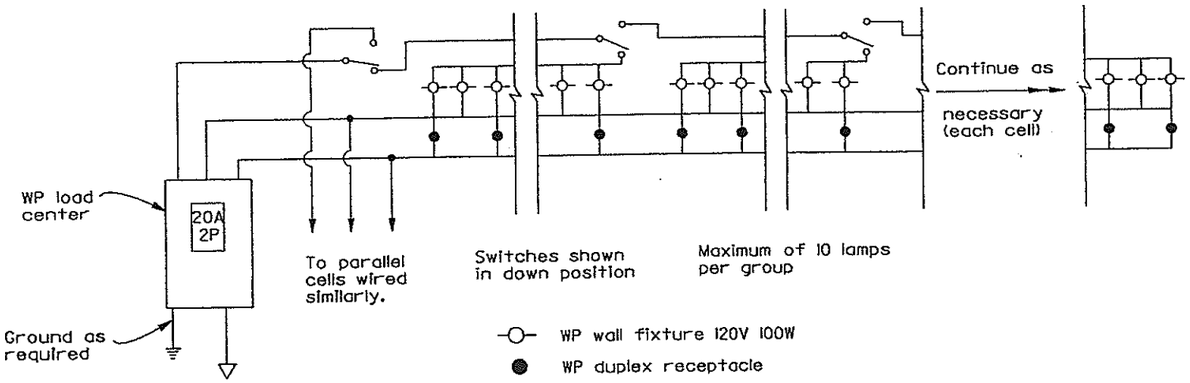

WIRING DIAGRAM

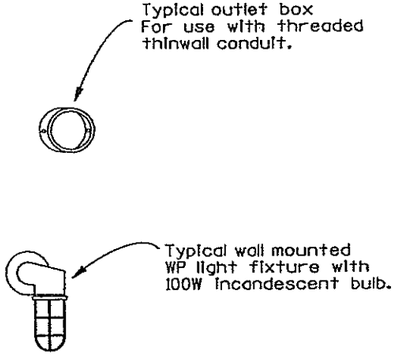

FIXTURE DETAILS

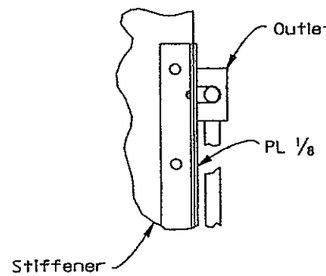

SECTION (B-44 / C)

MOUNTING DETAIL

NOTES:

GRC supports shall be spaced at 10' (max.)
Maximum length of any system shall be 800'.
Lighting systems shall be similar length when more than one system is required.
Run each system from abutment to pier 5. (4 Total)

INITIAL	DATE	CHECKED BY	DATE
CDOH	1/27/88	L.R.C.	3/90
J.L.S.	3/90	QUANTITIES BY	3/90
S.S.	11/88	CHECKED BY	LY
DESIGNED BY			
CHECKED BY			
DETAILED BY			

E-470
Engineer 470 Partnership

DIVISION OF HIGHWAYS

INTERIOR LIGHTING (STEEL BOX GIRDER)

RAMP F

Designer CDOH		Structure Numbers	F-17-JX
Detailer S. Shibao			
Drawing Number B-44 of 52 Drawings			

Revision Dates (Preliminary Stage Only)

UDA2:[200,32]SFINL0114.90R

STATE OF COLORADO
STATE DEPARTMENT OF HIGHWAYS
DIVISION OF HIGHWAYS:
D. H. FORM NO. 126:
REV. FEB. 1984

AS CONSTRUCTED		
NO REVISIONS ☐	REVISED ☐	VOID ☐

FED. ROAD REGION	DIVISION	PROJ. NO.	SHEET NO.	SHEET TOTALS
VIII	COLORADO	IA06/1B02	200	

REVISIONS

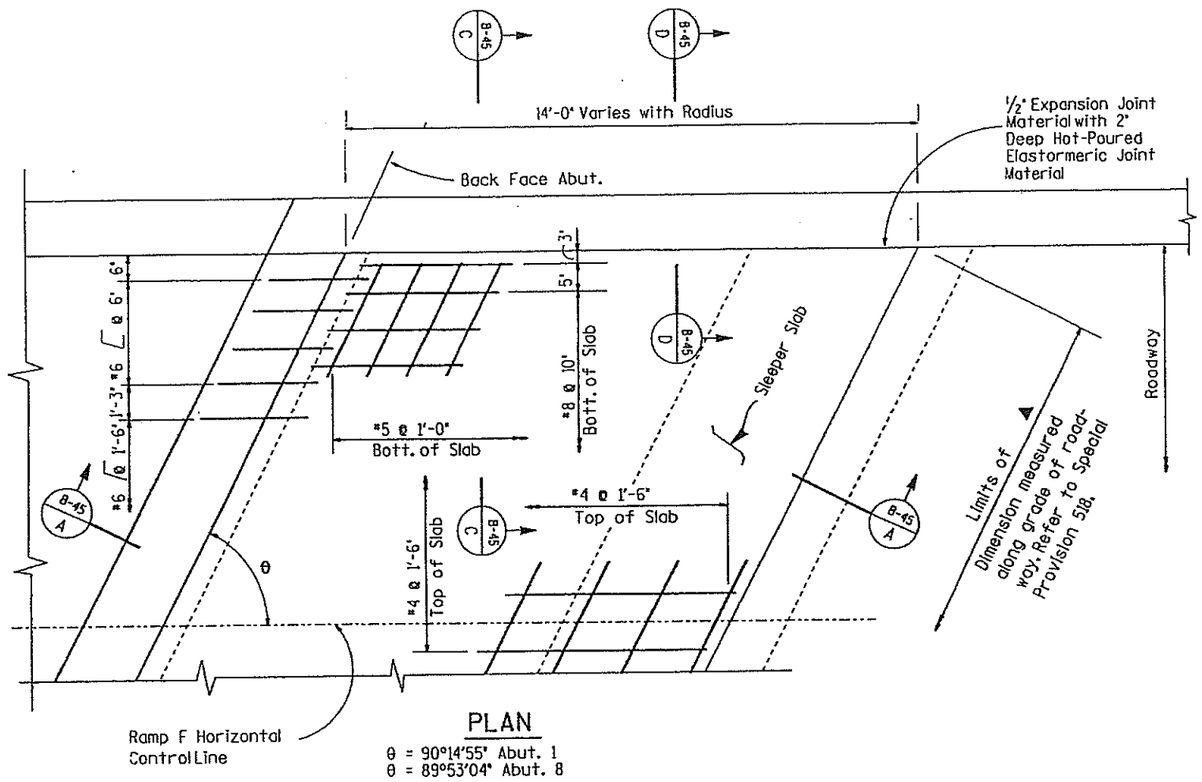

PLAN

θ = 90°14'55" Abut. 1
θ = 89°53'04" Abut. 8

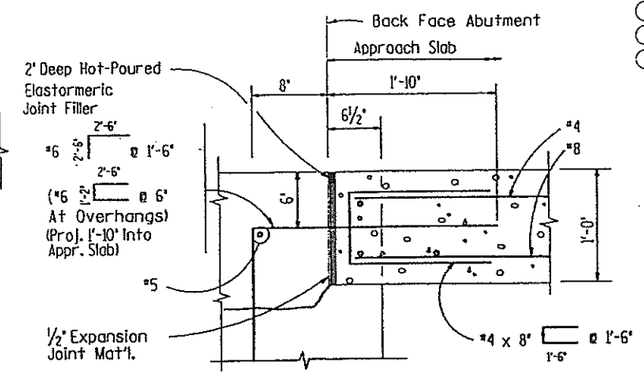

DETAIL B

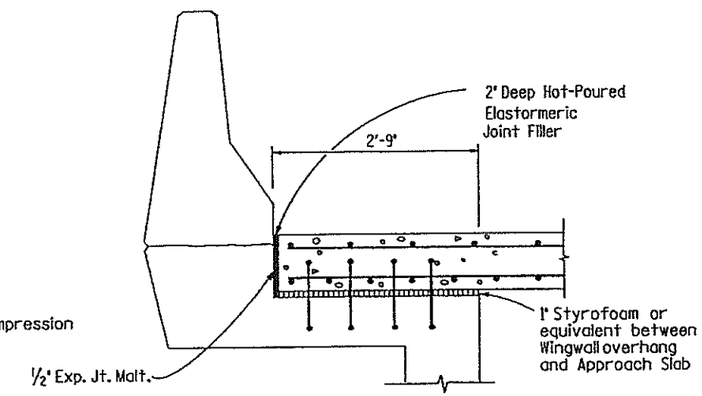

SECTION B-45 C

On Wingwall Overhang

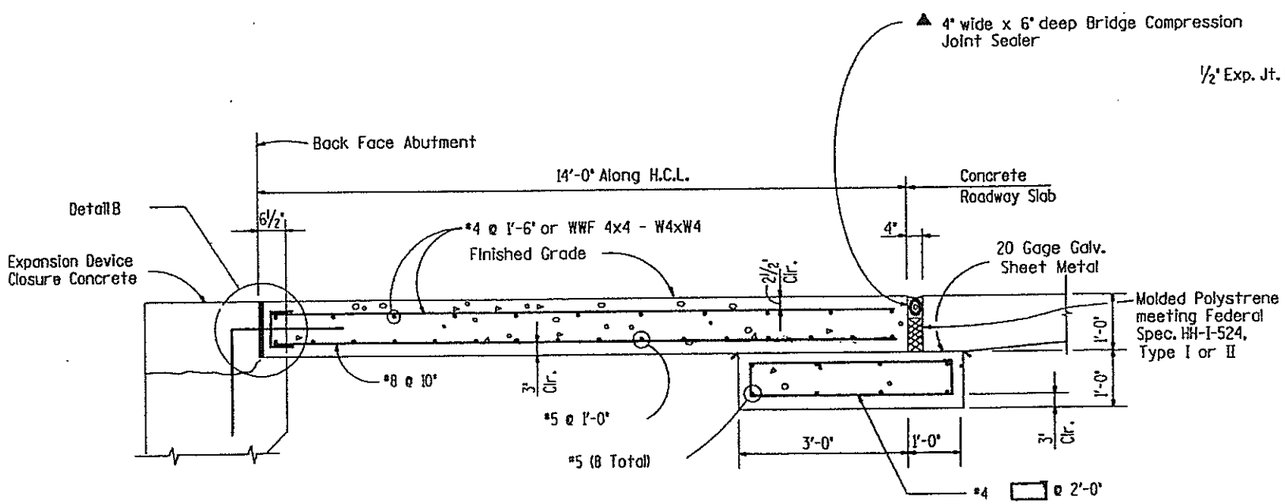

SECTION B-45 A

With Concrete Roadway Slab

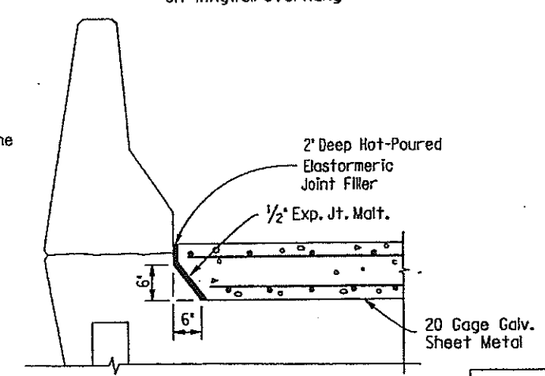

SECTION B-45 D

On Retaining wall

GENERAL NOTES:

1. Concrete Class D (Bridge) shall be used for approach slabs.
2. 1/2" Expansion Joint Material shall meet AASHTO Spec. M-213.
3. The 20 Gauge Galvanized sheet metal, 1/2" Expansion Joint Material, Hot-Poured Elastormeric Joint Filler, and the 1" Styrofoam will not be measured and paid for separately, but shall be included in the work.
4. Hot-Poured Elastormeric Joint Filler Shall meet AASHTO M-282.

	INITIAL	DATE	CHECKED BY	M.R.M.	1-90
DESIGNED BY	M.R.M.	12-89	QUANTITIES BY	J.L.S.	3-90
CHECKED BY			CHECKED BY	L.R.C.	3-90
DETAILED BY	D.L.K.	1-90		LV	3-90

E-470
Engineer 470 Partnership

DIVISION OF HIGHWAYS

APPROACH SLAB DETAILS

RAMP F

Designer	M. Merklinger	Structure Numbers	F-17-JX
Detailer	D. Kurschinski		
Drawing Number	B-45 of 52 Drawings		

Revision Dates (Preliminary Stage Only)

UDA2:[200,32]SFAPS0114.90Z

STATE OF COLORADO
STATE DEPARTMENT OF HIGHWAYS
DIVISION OF HIGHWAYS
D. O. H. FORM NO. 126
REV. FEB. 1984

AS CONSTRUCTED		
NO REVISIONS ☐	REVISED ☐	VOID ☐

FED. ROAD REGION	DIVISION	PROJ. NO.	SHEET NO.	SHEET TOTALS
VIII	COLORADO	1A06/1B02	201	

REVISIONS			
A-1	4-2-90	Lower Locations, Side Slopes	M.R.M.

Location	Station	Radial Offset	Elev. U	Station	Radial Offset	Elev. L
Abut. 1	634+64.73	26.25' Lt.	5913.00	635+26.67	39.75' Lt.	5882.00
	634+64.65	8.25' Rt.	5915.38	635+26.67	21.75' Rt.	5884.38
Abut. 8	646+47.97	26.25' Lt.	5911.65	646+28.70	45.75' Lt.	5901.70
	646+48.01	8.25' Rt.	5913.34	646+28.70	17.75' Rt.	5903.90

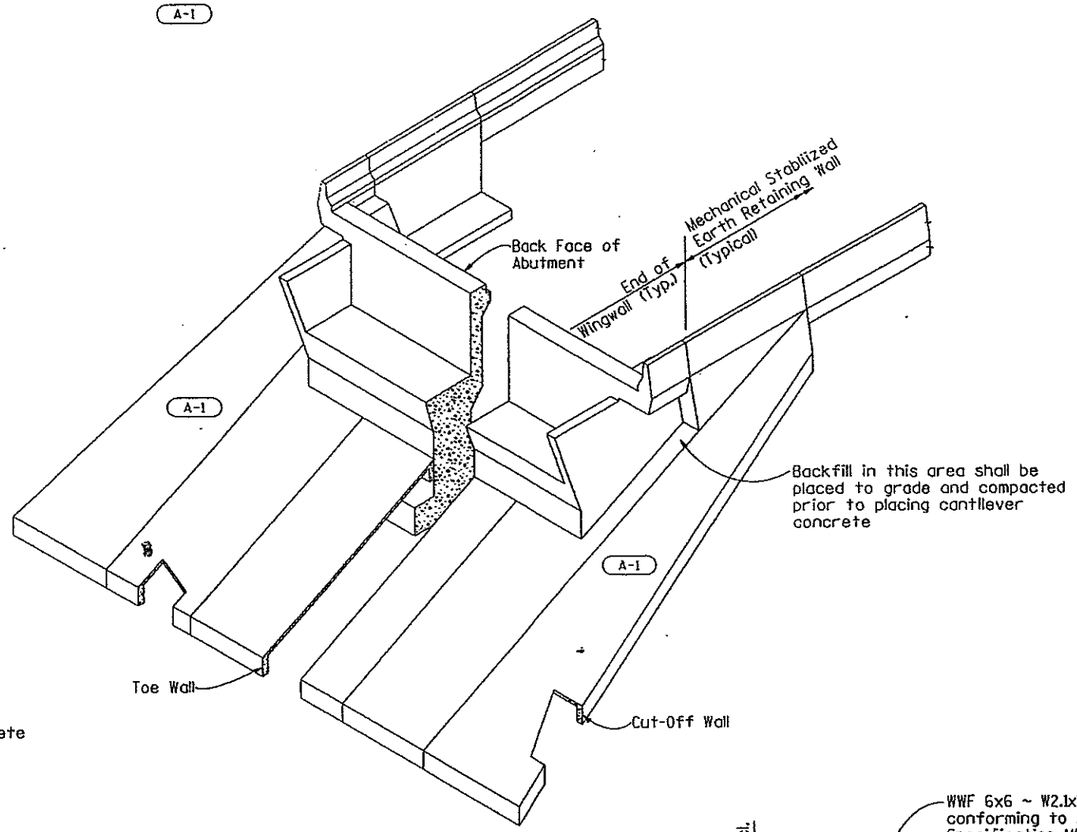

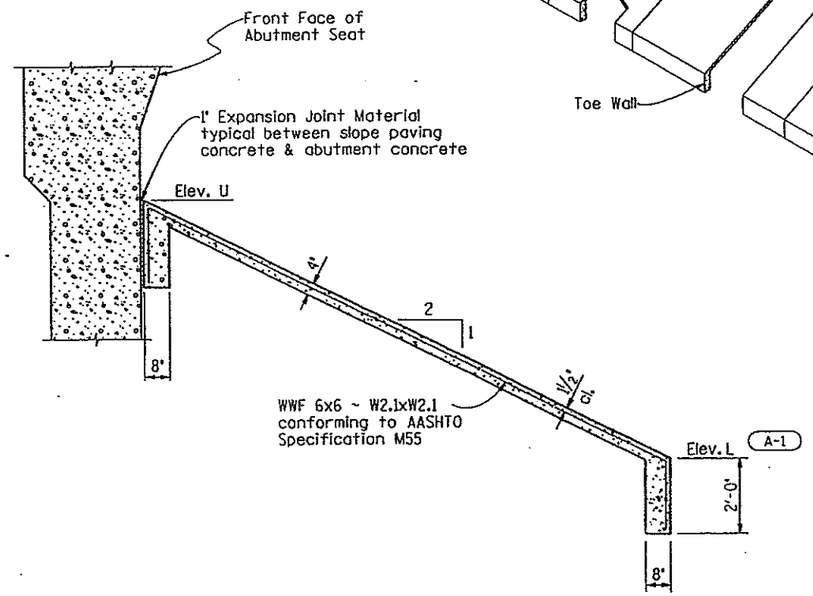

TYPICAL SECTION THRU SLOPE PAVING

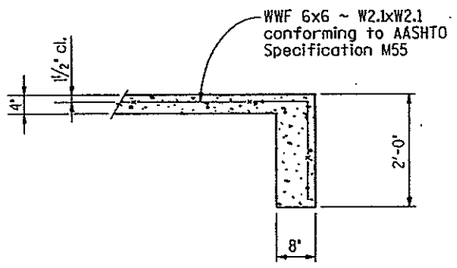

SECTION THRU CUT-OFF WALL

NOTES

1. Slope paving shall be poured in 10' transverse sections with a tooled construction joint at each section.
2. Wire fabric shall be 2" from the end of the joints and shall lap 8" at splices.
3. Where slope paving butts against structural concrete, separate with 1" expansion joint material.
4. Expansion joint material & welded wire fabric shall not be paid for separately, but shall be included in Item 507 Concrete Slope and Ditch Paving (Reinforced).
5. The surface of finished slope paving shall receive a float finish of uniform appearance free of float marks and smoothly troweled construction joints.
6. Structure excavation for concrete slope and ditch paving shall be limited to the actual volume occupied by the slope paving concrete.
7. All exposed concrete surfaces down to 1'-0" below finished grade shall be finished with a colored coating meeting the requirements in special provision revision of section 601. The color shall be Dark Tan to match the existing bridges.
8. These details and sections show general requirements only. For limits of slope paving see General Layouts.

	INITIAL	DATE	CHECKED BY	MRM	12-89
DESIGNED BY	MRM	12-89	QUANTITIES BY	LRC	3-90
CHECKED BY	JLS	3-90	CHECKED BY	LV	3-90
DETAILED BY	MED	12-89			

E-470
Engineer 470 Partnership

DIVISION OF HIGHWAYS

SLOPE PAVING DETAILS

RAMP F

Designer	M. Merklinger	Structure Numbers	F-17-JX
Detailer	M.E.Davison		
Drawing Number	B-46	of	52 Drawings

Revision Dates (Preliminary Stage Only)

UDA2:[200,32]SFPAV0114.90W

STATE OF COLORADO
STATE DEPARTMENT OF HIGHWAYS
DIVISION OF HIGHWAYS:
D. O. H. FORM NO. 126:
REV. FEB. 1984

BRIDGE DECK ELEVATIONS

	REVISIONS	
A-1 4-2-90	Revised Geometry	J.L.S.

AS CONSTRUCTED

NO REVISIONS ☐ REVISED ☐ VOID ☐

FED. ROAD REGION	DIVISION	PROJ. NO.	SHEET NO.	SHEET TOTAL
VIII	COLORADO	1A06/1B02	202	

58

LONGITUDINAL LINE: LT. DECK EDGE

BENT LINE DESCRIPTION OR FRACTIONAL POINT DESIGNATION	STATION	OFFSET	ELEVATION	COORDINATES FROM LAYOUT LINE EAST	NORTH	BENT LINE LENGTH FROM N-GRID or OFFSET FROM EXTERIOR GIRDER	GIRDER LINE LENGTH
BF ABUT 1	634+58.2868	-29.7500	5929.3406	2177952.0868	628426.0442	-85804.3161	0.0000
CL ABUT 1	634+62.6700	-29.7500	5929.4898	2177953.8543	628422.1791	-85806.2616	4.2500
F-1	634+68.4730	-29.7500	5929.6855	2177956.2208	628417.0744		9.8767
F-2	634+74.2760	-29.7500	5929.8791	2177958.6176	628411.9838		15.5033
F-3	634+80.0790	-29.7500	5930.0706	2177961.0446	628406.9075		21.1300
F-4	634+85.8820	-29.7500	5930.2600	2177963.5016	628401.8456		26.7566
F-5	634+91.6850	-29.7500	5930.4473	2177965.9885	628396.7984		32.3833
F-6	634+97.4880	-29.7500	5930.6326	2177968.5054	628391.7661		38.0099
F-7	635+03.2910	-29.7500	5930.8162	2177971.0520	628386.7487		43.6366
F-8	635+09.0940	-29.7500	5930.9981	2177973.6283	628381.7466		49.2632
F-9	635+14.8970	-29.7500	5931.1783	2177976.2342	628376.7598		54.8898
F-10	635+20.7000	-29.7500	5931.3567	2177978.8696	628371.7885		60.5165
F-11	635+26.5030	-29.7500	5931.5335	2177981.5345	628366.8329		66.1431
F-12	635+32.3060	-29.7500	5931.7086	2177984.2287	628361.8933		71.7698
F-13	635+38.1090	-29.7500	5931.8820	2177986.9521	628356.9696		77.3964
F-14	635+43.9120	-29.7500	5932.0536	2177989.7047	628352.0622		83.0231
F-15	635+49.7150	-29.7500	5932.2236	2177992.4863	628347.1713		88.6497
F-16	635+55.5180	-29.7500	5932.3919	2177995.2968	628342.2969		94.2764
F-17	635+61.3210	-29.7500	5932.5585	2177998.1362	628337.4392		99.9030
F-18	635+67.1240	-29.7500	5932.7233	2178001.0044	628332.5984		105.5297
F-19	635+72.9270	-29.7500	5932.8865	2178003.9011	628327.7748		111.1563
CL PIER 2	635+78.7300	-29.7500	5933.0480	2178006.8265	628322.9684	-91484.4667	116.7829
F-1	635+86.5957	-29.7500	5933.2642	2178010.8370	628316.4813		124.4096
F-2	635+94.4615	-29.7500	5933.4772	2178014.8996	628310.0267		132.0364
F-3	636+02.3272	-29.7500	5933.6866	2178019.0138	628303.6050		139.6631
F-4	636+10.1930	-29.7500	5933.8922	2178023.1796	628297.2165		147.2898
F-5	636+18.0587	-29.7500	5934.0940	2178027.3965	628290.8616		154.9165
PCC F2/F3	636+18.5587	-29.7500	5934.1067	2178027.6663	628290.4589	-93927.4434	155.4012
F-6	636+25.8496	-29.7500	5934.2900	2178031.6570	628284.5359		162.5431
F-7	636+33.6353	-29.7500	5934.4821	2178035.9512	628278.2331		170.1698
F-8	636+41.4211	-29.7500	5934.6704	2178040.2790	628271.9532		177.7965
F-9	636+49.2068	-29.7500	5934.8548	2178044.6403	628265.6966		185.4232
F-10	636+56.9925	-29.7500	5935.0347	2178049.0351	628259.4634		193.0500
F-11	636+64.7783	-29.7500	5935.2100	2178053.4631	628253.2538		200.6767
F-12	636+72.5640	-29.7500	5935.3809	2178057.9242	628247.0679		208.3034
F-13	636+80.3498	-29.7500	5935.5473	2178062.4183	628240.9060		215.9301
F-14	636+88.1355	-29.7500	5935.7091	2178066.9453	628234.7682		223.5568
F-15	636+95.9213	-29.7500	5935.8665	2178071.5051	628228.6547		231.1835
F-16	637+03.7070	-29.7500	5936.0193	2178076.0974	628222.5656		238.8102
F-17	637+11.4928	-29.7500	5936.1677	2178080.7223	628216.5012		246.4369
F-18	637+19.2785	-29.7500	5936.3115	2178085.3795	628210.4616		254.0636
F-19	637+27.0643	-29.7500	5936.4509	2178090.0689	628204.4469		261.6903
CL PIER 3	637+34.8500	-29.7500	5936.5857	2178094.7904	628198.4575	-99652.3408	269.3170
F-1	637+44.4090	-29.7500	5936.7451	2178100.6310	628191.1385		278.6807
F-2	637+53.9680	-29.7500	5936.8984	2178106.5195	628183.8580		288.0445
F-3	637+63.5270	-29.7500	5937.0459	2178112.4556	628176.6164		297.4082
F-4	637+73.0860	-29.7500	5937.1878	2178118.4391	628169.4138		306.7719
F-5	637+82.6450	-29.7500	5937.3239	2178124.4698	628162.2507		316.1357
F-6	637+92.2040	-29.7500	5937.4544	2178130.5473	628155.1273		325.4994
F-7	638+01.7630	-29.7500	5937.5791	2178136.6715	628148.0440		334.8632
F-8	638+11.3220	-29.7500	5937.6982	2178142.8420	628141.0010		344.2269
F-9	638+20.8810	-29.7500	5937.8115	2178149.0587	628133.9987		353.5906
F-10	638+30.4400	-29.7500	5937.9192	2178155.3211	628127.0373		362.9544
F-11	638+39.9990	-29.7500	5938.0211	2178161.6291	628120.1171		372.3181
F-12	638+49.5580	-29.7500	5938.1173	2178167.9824	628113.2385		381.6818
F-13	638+59.1170	-29.7500	5938.2079	2178174.3807	628106.4018		391.0456
F-14	638+68.6760	-29.7500	5938.2927	2178180.8238	628099.6072		400.4093
F-15	638+78.2350	-29.7500	5938.3719	2178187.3113	628092.8551		409.7731
F-16	638+87.7940	-29.7500	5938.4453	2178193.8429	628086.1456		419.1368
F-17	638+97.3530	-29.7500	5938.5131	2178200.4185	628079.4792		428.5005
F-18	639+06.9120	-29.7500	5938.5751	2178207.0377	628072.8561		437.8643
F-19	639+16.4710	-29.7500	5938.6314	2178213.7002	628066.2766		447.2280
CL PIER 4	639+26.0300	-29.7500	5938.6821	2178220.4057	628059.7409	-112446.5585	456.5917
F-1	639+35.6460	-29.7500	5938.7273	2178227.1944	628053.2108		466.0113
F-2	639+45.2620	-29.7500	5938.7667	2178234.0261	628046.7257		475.4309
F-3	639+54.8780	-29.7500	5938.8003	2178240.9004	628040.2858		484.8505
F-4	639+64.4940	-29.7500	5938.8282	2178247.8170	628033.8915		494.2700
F-5	639+74.1100	-29.7500	5938.8503	2178254.7758	628027.5430		503.6896
F-6	639+83.7260	-29.7500	5938.8667	2178261.7763	628021.2405		513.1092
F-7	639+93.3420	-29.7500	5938.8773	2178268.8183	628014.9844		522.5287
F-8	640+02.9580	-29.7500	5938.8821	2178275.9014	628008.7749		531.9483
F-9	640+12.5740	-29.7500	5938.8811	2178283.0254	628002.6124		541.3679
F-10	640+22.1900	-29.7500	5938.8744	2178290.1899	627996.4970		550.7875
F-11	640+31.8060	-29.7500	5938.8619	2178297.3946	627990.4290		560.2070
F-12	640+41.4220	-29.7500	5938.8436	2178304.6392	627984.4088		569.6266
F-13	640+51.0380	-29.7500	5938.8196	2178311.9234	627978.4365		579.0462
F-14	640+60.6540	-29.7500	5938.7898	2178319.2469	627972.5125		588.4658
F-15	640+70.2700	-29.7500	5938.7542	2178326.6094	627966.6369		597.8853
F-16	640+79.8860	-29.7500	5938.7129	2178334.0104	627960.8100		607.3049
F-17	640+89.5020	-29.7500	5938.6658	2178341.4498	627955.0322		616.7245
F-18	640+99.1180	-29.7500	5938.6129	2178348.9272	627949.3036		626.1440
F-19	641+08.7340	-29.7500	5938.5543	2178356.4422	627943.6245		635.5636
CL PIER 5	641+18.3500	-29.7500	5938.4899	2178363.9946	627937.9951	-131709.7285	644.9832
F-1	641+27.9241	-29.7500	5938.4216	2178371.5508	627932.4399		654.3617
F-2	641+37.4982	-29.7500	5938.3501	2178379.1434	627926.9345		663.7403
F-3	641+47.0724	-29.7500	5938.2754	2178386.7721	627921.4792		673.1188
F-4	641+56.6465	-29.7500	5938.1976	2178394.4364	627916.0741		682.4974
F-5	641+66.2206	-29.7500	5938.1166	2178402.1361	627910.7195		691.8759
F-6	641+75.7947	-29.7500	5938.0324	2178409.8708	627905.4156		701.2545
F-7	641+85.3688	-29.7500	5937.9451	2178417.6402	627900.1627		710.6330
F-8	641+94.9430	-29.7500	5937.8545	2178425.4440	627894.9610		720.0116
F-9	642+04.5171	-29.7500	5937.7608	2178433.2818	627889.8107		729.3901
F-10	642+14.0912	-29.7500	5937.6640	2178441.1533	627884.7121		738.7687
F-11	642+23.6653	-29.7500	5937.5634	2178449.0582	627879.6653		748.1472
F-12	642+33.2394	-29.7500	5937.4572	2178456.9960	627874.6705		757.5258
PCC F3/F4	642+42.2752	-29.7500	5937.3517	2178464.5175	627870.0046	-149594.7179	766.3769
F-13	642+42.8102	-29.7500	5937.3453	2178464.9665	627869.7280		766.9043
F-14	642+52.3230	-29.7500	5937.2285	2178472.9637	627864.8289		776.2829
F-15	642+61.8358	-29.7500	5937.1060	2178480.9830	627859.9660		785.6614
F-16	642+71.3487	-29.7500	5936.9776	2178489.0241	627855.1392		795.0400
F-17	642+80.8615	-29.7500	5936.8415	2178497.0869	627850.3489		804.4185
F-18	642+90.3743	-29.7500	5936.6972	2178505.1713	627845.5949		813.7970
F-19	642+99.8872	-29.7500	5936.5448	2178513.2771	627840.8776		823.1756
CL PIER 6	643+09.4000	-29.7500	5936.3842	2178521.4040	627836.1968	-157947.9283	832.5541
F-1	643+18.9300	-29.7500	5936.2151	2178529.5668	627831.5444		841.9496
F-2	643+28.4600	-29.7500	5936.0379	2178537.7504	627826.9290		851.3451
F-3	643+37.9900	-29.7500	5935.8524	2178545.9549	627822.3507		860.7406
F-4	643+47.5200	-29.7500	5935.6588	2178554.1800	627817.8095		870.1360
F-5	643+57.0500	-29.7500	5935.4570	2178562.4256	627813.3055		879.5315
F-6	643+66.5800	-29.7500	5935.2470	2178570.6914	627808.8389		888.9270
F-7	643+76.1100	-29.7500	5935.0299	2178578.9773	627804.4096		898.3224
F-8	643+85.6400	-29.7500	5934.8071	2178587.2832	627800.0180		907.7179
F-9	643+95.1700	-29.7500	5934.5787	2178595.6089	627795.6639		917.1134
F-10	644+04.7000	-29.7500	5934.3446	2178603.9541	627791.3475		926.5089
F-11	644+14.2300	-29.7500	5934.1048	2178612.3188	627787.0688		935.9043
F-12	644+23.7600	-29.7500	5933.8594	2178620.7028	627782.8281		945.2998
F-13	644+33.2900	-29.7500	5933.6082	2178629.1058	627778.6253		954.6953
F-14	644+42.8200	-29.7500	5933.3515	2178637.5278	627774.4605		964.0907
F-15	644+52.3500	-29.7500	5933.0890	2178645.9685	627770.3339		973.4862
F-16	644+61.8800	-29.7500	5932.8209	2178654.4278	627766.2455		982.8817
F-17	644+71.4100	-29.7500	5932.5472	2178662.9055	627762.1954		992.2771
F-18	644+80.9400	-29.7500	5932.2677	2178671.4014	627758.1836		1001.6726
F-19	644+90.4700	-29.7500	5931.9826	2178679.9154	627754.2103		1011.0681
CL PIER 7	645+00.0000	-29.7500	5931.6918	2178688.4472	627750.2756	-188820.0035	1020.4636
F-1	645+07.5000	-29.7500	5931.4590	2178695.1742	627747.2061		1027.8577
F-2	645+15.0000	-29.7500	5931.2227	2178701.9120	627744.1607		1035.2518
F-3	645+22.5000	-29.7500	5930.9829	2178708.6606	627741.1392		1042.6459
F-4	645+30.0000	-29.7500	5930.7395	2178715.4199	627738.1417		1050.0401
F-5	645+37.5000	-29.7500	5930.4927	2178722.1898	627735.1683		1057.4342
F-6	645+45.0000	-29.7500	5930.2423	2178728.9703	627732.2191		1064.8283
F-7	645+52.5000	-29.7500	5929.9884	2178735.7612	627729.2939		1072.2225
F-8	645+60.0000	-29.7500	5929.7310	2178742.5625	627726.3930		1079.6166
F-9	645+67.5000	-29.7500	5929.4702	2178749.3741	627723.5163		1087.0107
F-10	645+75.0000	-29.7500	5929.2058	2178756.1959	627720.6638		1094.4048
F-11	645+82.5000	-29.7500	5928.9378	2178763.0278	627717.8357		1101.7990
F-12	645+90.0000	-29.7500	5928.6664	2178769.8697	627715.0319		1109.1931
F-13	645+97.5000	-29.7500	5928.3915	2178776.7215	627712.2524		1116.5872
F-14	646+05.0000	-29.7500	5928.1131	2178783.5832	627709.4973		1123.9813
F-15	646+12.5000	-29.7500	5927.8311	2178790.4546	627706.7667		1131.3755
F-16	646+20.0000	-29.7500	5927.5457	2178797.3357	627704.0606		1138.7696
F-17	646+27.5000	-29.7500	5927.2567	2178804.2265	627701.3789		1146.1637
F-18	646+35.0000	-29.7500	5926.9642	2178811.1267	627698.7218		1153.5579
F-19	646+42.5000	-29.7500	5926.6682	2178818.0363	627696.0893		1160.9520
CL ABUT 8	646+50.0000	-29.7500	5926.3687	2178824.9552	627693.4813	-224548.5818	1168.3461
BF ABUT 8	646+54.3109	-29.7500	5926.1950	2178828.9363	627691.9935	-224559.9226	1172.5961

LONGITUDINAL LINE: LT. BARRIER FACE

BENT LINE DESCRIPTION OR FRACTIONAL POINT DESIGNATION	STATION	OFFSET	ELEVATION	COORDINATES FROM LAYOUT LINE EAST	NORTH	BENT LINE LENGTH FROM N-GRID or OFFSET FROM EXTERIOR GIRDER	GIRDER LINE LENGTH
BF ABUT 1	634+58.2948	-28.0000	5929.4616	2177950.4969	628425.3128	-85802.5661	0.0000
CL ABUT 1	634+62.6700	-28.0000	5929.6105	2177952.2644	628421.4478	-85804.5116	4.2500
F-1	634+68.4730	-28.0000	5929.8062	2177954.6354	628416.3336		9.8870
F-2	634+74.2760	-28.0000	5929.9999	2177957.0366	628411.2336		15.5240
F-3	634+80.0790	-28.0000	5930.1914	2177959.4680	628406.1480		21.1610
F-4	634+85.8820	-28.0000	5930.3808	2177961.9295	628401.0768		26.7981
F-5	634+91.6850	-28.0000	5930.5681	2177964.4211	628396.0203		32.4351
F-6	634+97.4880	-28.0000	5930.7534	2177966.9425	628390.9787		38.0721
F-7	635+03.2910	-28.0000	5930.9369	2177969.4938	628385.9521		43.7091
F-8	635+09.0940	-28.0000	5931.1187	2177972.0749	628380.9407		49.3461
F-9	635+14.8970	-28.0000	5931.2988	2177974.6856	628375.9447		54.9831
F-10	635+20.7000	-28.0000	5931.4772	2177977.3259	628370.9642		60.6202
F-11	635+26.5030	-28.0000	5931.6539	2177979.9957	628365.9995		66.2572
F-12	635+32.3060	-28.0000	5931.8288	2177982.6948	628361.0508		71.8942
F-13	635+38.1090	-28.0000	5932.0020	2177985.4233	628356.1181		77.5312
F-14	635+43.9120	-28.0000	5932.1735	2177988.1809	628351.2016		83.1682
F-15	635+49.7150	-28.0000	5932.3433	2177990.9676	628346.3016		88.8053
F-16	635+55.5180	-28.0000	5932.5113	2177993.7834	628341.4182		94.4423
F-17	635+61.3210	-28.0000	5932.6776	2177996.6280	628336.5516		100.0793
F-18	635+67.1240	-28.0000	5932.8422	2177999.5014	628331.7019		105.7163
F-19	635+72.9270	-28.0000	5933.0051	2178002.4036	628326.8694		111.3533
CL PIER 2	635+78.7300	-28.0000	5933.1662	2178005.3343	628322.0541	-91482.7167	116.9904
F-1	635+86.5921	-28.0000	5933.3818	2178009.3504	628315.5581		124.6276
F-2	635+94.4543	-28.0000	5933.5942	2178013.4185	628309.0945		132.2649
F-3	636+02.3164	-28.0000	5933.8030	2178017.5384	628302.6639		139.9021
F-4	636+10.1785	-28.0000	5934.0080	2178021.7098	628296.2665		147.5394
F-5	636+18.0406	-28.0000	5934.2091	2178025.9325	628289.9028		155.1766
PCC F2/F3	636+18.5587	-28.0000	5934.2222	2178026.2125	628289.4847	-93925.6934	155.6798
F-6	636+25.8326	-28.0000	5934.4046	2178030.1988	628283.5682		162.8139
F-7	636+33.6196	-28.0000	5934.5962	2178034.4988	628277.2566		170.4511
F-8	636+41.4065	-28.0000	5934.7840	2178038.8326	628270.9680		178.0884
F-9	636+49.1935	-28.0000	5934.9678	2178043.1999	628264.7027		185.7256
F-10	636+56.9804	-28.0000	5935.1472	2178047.6007	628258.4609		193.3629
F-11	636+64.7674	-28.0000	5935.3222	2178052.0347	628252.2426		201.0001
F-12	636+72.5544	-28.0000	5935.4927	2178056.5020	628246.0482		208.6374
F-13	636+80.3413	-28.0000	5935.6587	2178061.0023	628239.8777		216.2746
F-14	636+88.1283	-28.0000	5935.8203	2178065.5355	628233.7314		223.9119
F-15	636+95.9152	-28.0000	5935.9774	2178070.1015	628227.6094		231.5491
F-16	637+03.7022	-28.0000	5936.1300	2178074.7002	628221.5119		239.1863
F-17	637+11.4891	-28.0000	5936.2782	2178079.3314	628215.4391		246.8236
F-18	637+19.2761	-28.0000	5936.4219	2178083.9951	628209.3911		254.4608
F-19	637+27.0630	-28.0000	5936.5612	2178088.6910	628203.3682		262.0981
CL PIER 3	637+34.8500	-28.0000	5936.6960	2178093.4190	628197.3704	-99650.5908	269.7353
F-1	637+44.4090	-28.0000	5936.8554	2178099.2667	628190.0425		279.1106
F-2	637+53.9680	-28.0000	5937.0086	2178105.1624	628182.7531		288.4858
F-3	637+63.5270	-28.0000	5937.1562	2178111.1058	628175.5025		297.8610
F-4	637+73.0860	-28.0000	5937.2980	2178117.0967	628168.2911		307.2362
F-5	637+82.6450	-28.0000	5937.4342	2178123.1348	628161.1192		316.6114
F-6	637+92.2040	-28.0000	5937.5646	2178129.2198	628153.9871		325.9867
F-7	638+01.7630	-28.0000	5937.6894	2178135.3515	628146.8951		335.3619
F-8	638+11.3220	-28.0000	5937.8084	2178141.5296	628139.8435		344.7371
F-9	638+20.8810	-28.0000	5937.9218	2178147.7538	628132.8325		354.1123
F-10	638+30.4400	-28.0000	5938.0294	2178154.0239	628125.8626		363.4876
F-11	638+39.9990	-28.0000	5938.1313	2178160.3397	628118.9340		372.8628
F-12	638+49.5580	-28.0000	5938.2276	2178166.7008	628112.0470		382.2380
F-13	638+59.1170	-28.0000	5938.3181	2178173.1069	628105.2018		391.6132
F-14	638+68.6760	-28.0000	5938.4030	2178179.5579	628098.3989		400.9885
F-15	638+78.2350	-28.0000	5938.4821	2178186.0533	628091.6385		410.3637
F-16	638+87.7940	-28.0000	5938.5556	2178192.5930	628084.9208		419.7389
F-17	638+97.3530	-28.0000	5938.6233	2178199.1766	628078.2462		429.1141
F-18	639+06.9120	-28.0000	5938.6853	2178205.8040	628071.6150		438.4893
F-19	639+16.4710	-28.0000	5938.7417	2178212.4746	628065.0274		447.8646
CL PIER 4	639+26.0300	-28.0000	5938.7923	2178219.1884	628058.4837	-112444.8085	457.2398
F-1	639+35.6460	-28.0000	5938.8375	2178225.9854	628051.9456		466.6709
F-2	639+45.2620	-28.0000	5938.8769	2178232.8254	628045.4525		476.1020
F-3	639+54.8780	-28.0000	5938.9106	2178239.7082	628039.0047		485.5332
F-4	639+64.4940	-28.0000	5938.9385	2178246.6333	628032.6026		494.9643
F-5	639+74.1100	-28.0000	5938.9606	2178253.6006	628026.2462		504.3954
F-6	639+83.7260	-28.0000	5938.9769	2178260.6097	628019.9361		513.8266
F-7	639+93.3420	-28.0000	5938.9875	2178267.6603	628013.6723		523.2577
F-8	640+02.9580	-28.0000	5938.9923	2178274.7521	628007.4552		532.6888
F-9	640+12.5740	-28.0000	5938.9914	2178281.8848	628001.2851		542.1199
F-10	640+22.1900	-28.0000	5938.9846	2178289.0581	627995.1622		551.5511
F-11	640+31.8060	-28.0000	5938.9722	2178296.2717	627989.0868		560.9822
F-12	640+41.4220	-28.0000	5938.9539	2178303.5252	627983.0592		570.4133
F-13	640+51.0380	-28.0000	5938.9299	2178310.8183	627977.0796		579.8444
F-14	640+60.6540	-28.0000	5938.9001	2178318.1508	627971.1482		589.2756
F-15	640+70.2700	-28.0000	5938.8645	2178325.5223	627965.2655		598.7067
F-16	640+79.8860	-28.0000	5938.8231	2178332.9324	627959.4315		608.1378
F-17	640+89.5020	-28.0000	5938.7760	2178340.3810	627953.6465		617.5690
F-18	640+99.1180	-28.0000	5938.7232	2178347.8675	627947.9109		627.0001
F-19	641+08.7340	-28.0000	5938.6645	2178355.3918	627942.2248		636.4312
CL PIER 5	641+18.3500	-28.0000	5938.6001	2178362.9534	627936.5886	-131707.9785	645.8623
F-1	641+27.9228	-28.0000	5938.5317	2178370.5179	627931.0273		655.2511
F-2	641+37.4957	-28.0000	5938.4600	2178378.1188	627925.5159		664.6399
F-3	641+47.0685	-28.0000	5938.3850	2178385.7557	627920.0546		674.0287
F-4	641+56.6413	-28.0000	5938.3066	2178393.4284	627914.6436		683.4175
F-5	641+66.2141	-28.0000	5938.2249	2178401.1364	627909.2831		692.8063
F-6	641+75.7870	-28.0000	5938.1399	2178408.8796	627903.9734		702.1950
F-7	641+85.3598	-28.0000	5938.0516	2178416.6574	627898.7147		711.5838
F-8	641+94.9326	-28.0000	5937.9600	2178424.4697	627893.5073		720.9726
F-9	642+04.5054	-28.0000	5937.8650	2178432.3160	627888.3513		730.3614
F-10	642+14.0783	-28.0000	5937.7667	2178440.1961	627883.2470		739.7502
F-11	642+23.6511	-28.0000	5937.6646	2178448.1095	627878.1946		749.1390
F-12	642+33.2239	-28.0000	5937.5568	2178456.0560	627873.1944		758.5277
PCC F3/F4	642+42.2752	-28.0000	5937.4497	2178463.5996	627868.5147	-149592.9679	767.4050
F-13	642+42.7936	-28.0000	5937.4434	2178464.0350	627868.2464		767.9165
F-14	642+52.3088	-28.0000	5937.3250	2178472.0409	627863.3419		777.3053
F-15	642+61.8240	-28.0000	5937.2009	2178480.0689	627858.4736		786.6941
F-16	642+71.3392	-28.0000	5937.0710	2178488.1188	627853.6416		796.0828
F-17	642+80.8544	-28.0000	5936.9335	2178496.1904	627848.8459		805.4716
F-18	642+90.3696	-28.0000	5936.7879	2178504.2836	627844.0868		814.8604
F-19	642+99.8848	-28.0000	5936.6343	2178512.3982	627839.3642		824.2492
CL PIER 6	643+09.4000	-28.0000	5936.4727	2178520.5340	627834.6784	-157946.1783	833.6380
F-1	643+18.9300	-28.0000	5936.3028	2178528.7036	627830.0221		843.0414
F-2	643+28.4600	-28.0000	5936.1249	2178536.8942	627825.4028		852.4447
F-3	643+37.9900	-28.0000	5935.9389	2178545.1056	627820.8206		861.8481
F-4	643+47.5200	-28.0000	5935.7449	2178553.3376	627816.2755		871.2515
F-5	643+57.0500	-28.0000	5935.5428	2178561.5901	627811.7678		880.6549
F-6	643+66.5800	-28.0000	5935.3328	2178569.8629	627807.2974		890.0583
F-7	643+76.1100	-28.0000	5935.1157	2178578.1558	627802.8644		899.4617
F-8	643+85.6400	-28.0000	5934.8929	2178586.4687	627798.4691		908.8651
F-9	643+95.1700	-28.0000	5934.6644	2178594.8014	627794.1113		918.2684
F-10	644+04.7000	-28.0000	5934.4303	2178603.1537	627789.7913		927.6718
F-11	644+14.2300	-28.0000	5934.1905	2178611.5254	627785.5090		937.0752
F-12	644+23.7600	-28.0000	5933.9451	2178619.9164	627781.2647		946.4786
F-13	644+33.2900	-28.0000	5933.6940	2178628.3266	627777.0584		955.8820
F-14	644+42.8200	-28.0000	5933.4372	2178636.7556	627772.8901		965.2854
F-15	644+52.3500	-28.0000	5933.1748	2178645.2034	627768.7600		974.6887
F-16	644+61.8800	-28.0000	5932.9067	2178653.6699	627764.6681		984.0921
F-17	644+71.4100	-28.0000	5932.6329	2178662.1547	627760.6146		993.4955
F-18	644+80.9400	-28.0000	5932.3535	2178670.6578	627756.5995		1002.8989
F-19	644+90.4700	-28.0000	5932.0684	2178679.1789	627752.6229		1012.3023
CL PIER 7	645+00.0000	-28.0000	5931.7776	2178687.7179	627748.6848	-188818.2535	1021.7057
F-1	645+07.5000	-28.0000	5931.5448	2178694.4505	627745.6128		1029.1060
F-2	645+15.0000	-28.0000	5931.3084	2178701.1940	627742.5647		1036.5064
F-3	645+22.5000	-28.0000	5931.0686	2178707.9483	627739.5407		1043.9067
F-4	645+30.0000	-28.0000	5930.8253	2178714.7133	627736.5407		1051.3071
F-5	645+37.5000	-28.0000	5930.5784	2178721.4890	627733.5648		1058.7074
F-6	645+45.0000	-28.0000	5930.3280	2178728.2751	627730.6131		1066.1078
F-7	645+52.5000	-28.0000	5930.0742	2178735.0718	627727.6855		1073.5082
F-8	645+60.0000	-28.0000	5929.8168	2178741.8788	627724.7821		1080.9085
F-9	645+67.5000	-28.0000	5929.5559	2178748.6961	627721.9030		1088.3089
F-10	645+75.0000	-28.0000	5929.2915	2178755.5237	627719.0481		1095.7092
F-11	645+82.5000	-28.0000	5929.0236	2178762.3613	627716.2176		1103.1096
F-12	645+90.0000	-28.0000	5928.7522	2178769.2090	627713.4114		1110.5099
F-13	645+97.5000	-28.0000	5928.4772	2178776.0666	627710.6296		1117.9103
F-14	646+05.0000	-28.0000	5928.1988	2178782.9340	627707.8722		1125.3106
F-15	646+12.5000	-28.0000	5927.9169	2178789.8113	627705.1393		1132.7110
F-16	646+20.0000	-28.0000	5927.6314	2178796.6982	627702.4308		1140.1114
F-17	646+27.5000	-28.0000	5927.3424	2178803.5947	627699.7469		1147.5117
F-18	646+35.0000	-28.0000	5927.0500	2178810.5007	627697.0876		1154.9121
F-19	646+42.5000	-28.0000	5926.7540	2178817.4161	627694.4528		1162.3124
CL ABUT 8	646+50.0000	-28.0000	5926.4545	2178824.3409	627691.8427	-224546.8318	1169.7128
BF ABUT 8	646+54.3072	-28.0000	5926.2809	2178828.3220	627690.3549	-224558.1726	1173.9628

NOTE: ELEVATIONS ARE AT TOP OF CONCRETE DECK 0.1667 FEET BELOW FINISHED GRADE.

	INITIAL	DATE
DESIGNED BY / CHECKED BY	JLS	3-90
CHECKED BY / QUANTITIES BY	WDA	3-90
DETAILED BY / CHECKED BY	DLK	3-90

E-470
Engineer 470 Partnership

DIVISION OF HIGHWAYS

BRIDGE DECK ELEVATIONS

RAMP F

Designer J. Stapleton
Detailer D. Kurschinski
Structure Numbers F-17-JX

Drawing Number B-47 of 52 Drawings

Revision Dates (Preliminary Stage Only)

30-MAR-1990 11:09
/usr/dcco/e470/rampf/sfbde0114.90x

UDA2:[200,32]SFBDE0114.90X

STATE OF COLORADO
STATE DEPARTMENT OF HIGHWAYS
DIVISION OF HIGHWAYS:
D. O. H. FORM NO. 126:
REV. FEB. 1984

BRIDGE DECK ELEVATIONS

	REVISIONS	
A-1 4-2-90	Revised Geometry	J.L.S.

AS CONSTRUCTED

NO REVISIONS ☐ REVISED ☐ VOID ☐

FED. ROAD REGION	DIVISION	PROJ. NO.	SHEET NO.	SHEET TOTALS
VIII	COLORADO	IA06/1B02	203	

DESIGNED BY	CHECKED BY	CHECKED BY	QUANTITIES BY	DETAILED BY	CHECKED BY

	INITIAL	DATE
DESIGNED BY / CHECKED BY	JLS	3-90
QUANTITIES BY	WDA	3-90
DETAILED BY / CHECKED BY	DLK	3-90

30-MAR-1990 11:23
/usr/acco/e470/rampf/stbde014.90x

BENT LINE DESCRIPTION OR FRACTIONAL POINT DESIGNATION	STATION	OFFSET	ELEVATION	COORDINATES FROM LAYOUT LINE EAST	NORTH	BENT LINE LENGTH FROM N-GRID or OFFSET FROM EXTERIOR GIRDER	GIRDER LINE LENGTH
LONGITUDINAL LINE: WEB W.P. 1							
BF ABUT 1	634+58.3099	-24.7126	5929.6889	2177947.5103	628423.9390	-85799.2787	0.0000
CL ABUT 1	634+62.6700	-24.7126	5929.8374	2177949.2779	628420.0739	-85801.2243	4.2500
F-1	634+68.4730	-24.7126	5930.0331	2177951.6570	628414.9421		9.9065
F-2	634+74.2760	-24.7126	5930.2267	2177954.0666	628409.8245		15.5630
F-3	634+80.0790	-24.7126	5930.4182	2177956.5064	628404.7212		21.2195
F-4	634+85.8820	-24.7126	5930.6076	2177958.9764	628399.6325		26.8760
F-5	634+91.6850	-24.7126	5930.7949	2177961.4766	628394.5586		32.5325
F-6	634+97.4880	-24.7126	5930.9802	2177964.0067	628389.4995		38.1890
F-7	635+03.2910	-24.7127	5931.1637	2177966.5669	628384.4555		43.8455
F-8	635+09.0940	-24.7127	5931.3454	2177969.1569	628379.4268		49.5020
F-9	635+14.8970	-24.7127	5931.5254	2177971.7767	628374.4136		55.1585
F-10	635+20.7000	-24.7128	5931.7036	2177974.4262	628369.4160		60.8150
F-11	635+26.5030	-24.7129	5931.8800	2177977.1052	628364.4341		66.4715
F-12	635+32.3060	-24.7130	5932.0546	2177979.8138	628359.4683		72.1280
F-13	635+38.1090	-24.7131	5932.2275	2177982.5518	628354.5186		77.7845
F-14	635+43.9120	-24.7132	5932.3986	2177985.3190	628349.5852		83.4410
F-15	635+49.7150	-24.7133	5932.5680	2177988.1155	628344.6683		89.0975
F.S. 1	635+49.7300	-24.7133	5932.5684	2177988.1228	628344.6557	-89870.9770	89.1122
F-16	635+55.5180	-24.7135	5932.7355	2177990.9411	628339.7681		94.7540
F-17	635+61.3210	-24.7136	5932.9014	2177993.7957	628334.8848		100.4105
F-18	635+67.1240	-24.7138	5933.0654	2177996.6792	628330.0184		106.0670
F-19	635+72.9270	-24.7140	5933.2277	2177999.5915	628325.1693		111.7235
CL PIER 2	635+78.7300	-24.7142	5933.3882	2178002.5325	628320.3375	-91479.4309	117.3800
F-1	635+86.5853	-24.7145	5933.6026	2178006.5592	628313.8248		125.0371
F-2	635+94.4407	-24.7148	5933.8138	2178010.6381	628307.3446		132.6941
F-3	636+02.2960	-24.7151	5934.0214	2178014.7688	628300.8974		140.3512
F.S. 2	636+07.7300	-24.7154	5934.1627	2178017.6565	628296.4570	-93230.0209	145.6479
F-4	636+10.1514	-24.7155	5934.2251	2178018.9512	628294.4835		148.0082
F-5	636+18.0067	-24.7158	5934.4250	2178023.1848	628288.1034		155.6652
PCC F2/F3	636+18.5587	-24.7158	5934.4389	2178023.4843	628287.6565	-93922.4092	156.2033
F-6	636+25.8006	-24.7161	5934.6196	2178027.4622	628281.7526		163.3222
F-7	636+33.5898	-24.7164	5934.8102	2178031.7736	628275.4247		170.9793
F-8	636+41.3790	-24.7167	5934.9970	2178036.1187	628269.1199		178.6363
F-9	636+49.1683	-24.7171	5935.1799	2178040.4975	628262.8385		186.2934
F-10	636+56.9575	-24.7173	5935.3585	2178044.9098	628256.5805		193.9504
F-11	636+64.7468	-24.7176	5935.5326	2178049.3555	628250.3462		201.6074
F-12	636+72.5360	-24.7178	5935.7024	2178053.8344	628244.1358		209.2645
F-13	636+80.3253	-24.7180	5935.8678	2178058.3465	628237.9494		216.9215
F-14	636+88.1145	-24.7182	5936.0288	2178062.8915	628231.7872		224.5786
F.S. 3	636+95.8500	-24.7184	5936.1843	2178067.4378	628225.6917	-97581.4245	232.1827
F-15	636+95.9038	-24.7184	5936.1854	2178067.4695	628225.6494		232.2356
F-16	637+03.6930	-24.7185	5936.3376	2178072.0802	628219.5362		239.8926
F-17	637+11.4823	-24.7186	5936.4855	2178076.7234	628213.4477		247.5497
F-18	637+19.2715	-24.7187	5936.6290	2178081.3992	628207.3840		255.2067
F-19	637+27.0608	-24.7188	5936.7681	2178086.1073	628201.3455		262.8638
CL PIER 3	637+34.8500	-24.7188	5936.9028	2178090.8476	628195.3322	-99647.3097	270.5208
F-1	637+44.4090	-24.7188	5937.0621	2178096.7088	628187.9875		279.9176
F-2	637+53.9680	-24.7188	5937.2153	2178102.6180	628180.6813		289.3143
F-3	637+63.5270	-24.7188	5937.3629	2178108.5751	628173.4141		298.7111
F-4	637+73.0860	-24.7188	5937.5047	2178114.5797	628166.1862		308.1078
F.S. 4	637+73.8500	-24.7188	5937.5158	2178115.0617	628165.6102	-101876.8951	308.8589
F-5	637+82.6450	-24.7188	5937.6409	2178120.6317	628158.9978		317.5046
F-6	637+92.2040	-24.7188	5937.7713	2178126.7306	628151.8493		326.9014
F-7	638+01.7630	-24.7188	5937.8961	2178132.8764	628144.7410		336.2981
F-8	638+11.3220	-24.7188	5938.0151	2178139.0687	628137.6731		345.6949
F-9	638+20.8810	-24.7188	5938.1285	2178145.3073	628130.6461		355.0916
F-10	638+30.4400	-24.7188	5938.2361	2178151.5918	628123.6602		364.4884
F-11	638+39.9990	-24.7188	5938.3381	2178157.9221	628116.7156		373.8851
F-12	638+49.5580	-24.7188	5938.4343	2178164.2978	628109.8128		383.2819
F-13	638+59.1170	-24.7188	5938.5249	2178170.7186	628102.9519		392.6786
F-14	638+68.6760	-24.7188	5938.6097	2178177.1844	628096.1334		402.0754
F.S. 5	638+78.0300	-24.7188	5938.6872	2178183.5547	628089.5023	-108751.6674	411.2706
F-15	638+78.2350	-24.7188	5938.6888	2178183.6948	628089.3574		411.4722
F-16	638+87.7940	-24.7188	5938.7623	2178190.2495	628082.6243		420.8689
F-17	638+97.3530	-24.7188	5938.8300	2178196.8482	628075.9344		430.2657
F-18	639+06.9120	-24.7188	5938.8921	2178203.4908	628069.2879		439.6624
F-19	639+16.4710	-24.7188	5938.9484	2178210.1768	628062.6852		449.0592
CL PIER 4	639+26.0300	-24.7188	5938.9990	2178216.9060	628056.1265	-112441.5273	458.4559
F-1	639+35.6460	-24.7188	5939.0442	2178223.7186	628049.5734		467.9087
F-2	639+45.2620	-24.7189	5939.0837	2178230.5743	628043.0654		477.3615
F-3	639+54.8780	-24.7188	5939.1173	2178237.4728	628036.6028		486.8143
F-4	639+64.4940	-24.7188	5939.1452	2178244.4139	628030.1859		496.2671
F.S. 6	639+74.0300	-24.7188	5939.1672	2178251.3389	628023.8678	-116519.6351	505.6413
F-5	639+74.1100	-24.7188	5939.1673	2178251.3972	628023.8150		505.7199
F-6	639+83.7260	-24.7188	5939.1837	2178258.4224	628017.4903		515.1727
F-7	639+93.3420	-24.7188	5939.1942	2178265.4892	628011.2121		524.6255
F-8	640+02.9580	-24.7188	5939.1990	2178272.5973	628004.9808		534.0783
F-9	640+12.5740	-24.7188	5939.1981	2178279.7464	627998.7965		543.5311
F-10	640+22.1900	-24.7188	5939.1914	2178286.9362	627992.6595		552.9838
F-11	640+31.8060	-24.7188	5939.1789	2178294.1663	627986.5702		562.4366
F-12	640+41.4220	-24.7188	5939.1606	2178301.4365	627980.5287		571.8894
F-13	640+51.0380	-24.7188	5939.1366	2178308.7464	627974.5354		581.3422
F-14	640+60.6540	-24.7188	5939.1068	2178316.0957	627968.5904		590.7950
F-15	640+70.2700	-24.7188	5939.0712	2178323.4841	627962.6941		600.2478
F.S. 7	640+70.3500	-24.7188	5939.0709	2178323.5457	627962.6453	-126097.0609	600.3264
F-16	640+79.8860	-24.7188	5939.0299	2178330.9113	627956.8467		609.7006
F-17	640+89.5020	-24.7188	5938.9827	2178338.3769	627951.0485		619.1534
F-18	640+99.1180	-24.7188	5938.9299	2178345.8806	627945.2997		628.6062
F-19	641+08.7340	-24.7188	5938.8712	2178353.4222	627939.6006		638.0589
CL PIER 5	641+18.3500	-24.7188	5938.8068	2178361.0012	627933.9514	-131704.6974	647.5117
F-1	641+27.9204	-24.7189	5938.7383	2178368.5811	627928.3788		656.9197
F-2	641+37.4908	-24.7190	5938.6661	2178376.1976	627922.8562		666.3276
F-3	641+47.0612	-24.7192	5938.5904	2178383.8502	627917.3839		675.7356
F-4	641+56.6315	-24.7195	5938.5110	2178391.5387	627911.9620		685.1435
F-5	641+66.2019	-24.7199	5938.4280	2178399.2627	627906.5909		694.5515
F.S. 8	641+66.3500	-24.7199	5938.4267	2178399.3825	627906.5082	-137986.5622	694.6970
F-6	641+75.7723	-24.7204	5938.3414	2178407.0218	627901.2707		703.9594
F-7	641+85.3427	-24.7209	5938.2513	2178414.8158	627896.0016		713.3674
F-8	641+94.9131	-24.7215	5938.1575	2178422.6443	627890.7840		722.7753
F-9	642+04.4835	-24.7222	5938.0601	2178430.5069	627885.6180		732.1833
F-10	642+14.0538	-24.7230	5937.9591	2178438.4034	627880.5038		741.5912
F-11	642+23.6242	-24.7238	5937.8540	2178446.3333	627875.4416		750.9992
F-12	642+33.1946	-24.7246	5937.7434	2178454.2962	627870.4317		760.4071
PCC F3/F4	642+42.2752	-24.7254	5937.6331	2178461.8820	627865.7266	-149589.6932	769.3336
F-13	642+42.7624	-24.7254	5937.6270	2178462.2919	627865.4742		769.8151
F-14	642+52.2820	-24.7262	5937.5056	2178470.3145	627860.5602		779.2230
F.S. 9	642+61.4000	-24.7269	5937.3840	2178478.0193	627855.8876	-151863.6780	788.2340
F-15	642+61.8017	-24.7269	5937.3786	2178478.3592	627855.6825		788.6310
F-16	642+71.3214	-24.7277	5937.2457	2178486.4259	627850.8411		798.0389
F-17	642+80.8410	-24.7284	5937.1054	2178494.5143	627846.0362		807.4469
F-18	642+90.3607	-24.7289	5936.9573	2178502.6243	627841.2678		816.8548
F-19	642+99.8803	-24.7295	5936.8015	2178510.7557	627836.5361		826.2628
CL PIER 6	643+09.4000	-24.7299	5936.6380	2178518.9084	627831.8410	-157942.9082	835.6707
F-1	643+18.9300	-24.7303	5936.4666	2178527.0910	627827.1777		845.0889
F-2	643+28.4600	-24.7306	5936.2874	2178535.2946	627822.5514		854.5071
F-3	643+37.9900	-24.7308	5936.1004	2178543.5190	627817.9622		863.9252
F-4	643+47.5200	-24.7310	5935.9057	2178551.7641	627813.4102		873.3434
F-5	643+57.0500	-24.7311	5935.7032	2178560.0296	627808.8954		882.7616
F.S. 10	643+57.4000	-24.7311	5935.6956	2178560.3335	627808.7303	-164612.0274	883.1075
F-6	643+66.5800	-24.7311	5935.4929	2178568.3154	627804.4180		892.1797
F-7	643+76.1100	-24.7311	5935.2758	2178576.6213	627799.9781		901.5979
F-8	643+85.6400	-24.7311	5935.0531	2178584.9473	627795.5758		911.0161
F-9	643+95.1700	-24.7311	5934.8246	2178593.2931	627791.2112		920.4342
F-10	644+04.7000	-24.7311	5934.5905	2178601.6585	627786.8844		929.8524
F-11	644+14.2300	-24.7311	5934.3507	2178610.0434	627782.5954		939.2706
F-12	644+23.7600	-24.7311	5934.1053	2178618.4476	627778.3444		948.6887
F-13	644+33.2900	-24.7311	5933.8542	2178626.8709	627774.1315		958.1069
F-14	644+42.8200	-24.7311	5933.5974	2178635.3132	627769.9567		967.5251
F-15	644+52.3500	-24.7311	5933.3350	2178643.7744	627765.8201		976.9432
F.S. 11	644+61.0000	-24.7311	5933.0918	2178651.4703	627762.0986	-181438.8232	985.4917
F-16	644+61.8800	-24.7311	5933.0668	2178652.2541	627761.7218		986.3614
F-17	644+71.4100	-24.7311	5932.7931	2178660.7522	627757.6619		995.7796
F-18	644+80.9400	-24.7311	5932.5136	2178669.2687	627753.6404		1005.1978
F-19	644+90.4700	-24.7311	5932.2285	2178677.8032	627749.6576		1014.6159
CL PIER 7	645+00.0000	-24.7311	5931.9378	2178686.3557	627745.7133	-188814.9846	1024.0341
F-1	645+07.5000	-24.7311	5931.7049	2178693.0989	627742.6364		1031.4461
F-2	645+15.0000	-24.7311	5931.4686	2178699.8529	627739.5836		1038.8581
F-3	645+22.5000	-24.7311	5931.2288	2178706.6179	627736.5548		1046.2701
F-4	645+30.0000	-24.7311	5930.9854	2178713.3935	627733.5501		1053.6821
F-5	645+37.5000	-24.7311	5930.7386	2178720.1798	627730.5695		1061.0940
F.S. 12	645+39.0000	-24.7311	5930.6888	2178721.5383	627729.9763	-196879.8922	1062.5764
F-6	645+45.0000	-24.7311	5930.4882	2178726.9766	627727.6132		1068.5060
F-7	645+52.5000	-24.7311	5930.2344	2178733.7840	627724.6810		1075.9180
F-8	645+60.0000	-24.7311	5929.9770	2178740.6017	627721.7730		1083.3300
F-9	645+67.5000	-24.7311	5929.7161	2178747.4297	627718.8894		1090.7420
F-10	645+75.0000	-24.7311	5929.4517	2178754.2680	627716.0300		1098.1540
F-11	645+82.5000	-24.7311	5929.1838	2178761.1164	627713.1950		1105.5660
F-12	645+90.0000	-24.7311	5928.9124	2178767.9748	627710.3844		1112.9780
F-13	645+97.5000	-24.7311	5928.6374	2178774.8432	627707.5983		1120.3900
F-14	646+05.0000	-24.7311	5928.3590	2178781.7214	627704.8365		1127.8020
F-15	646+12.5000	-24.7311	5928.0770	2178788.6095	627702.0993		1135.2139
F-16	646+20.0000	-24.7311	5927.7916	2178795.5072	627699.3866		1142.6259
F-17	646+27.5000	-24.7311	5927.5026	2178802.4146	627696.6985		1150.0379
F-18	646+35.0000	-24.7311	5927.2101	2178809.3314	627694.0350		1157.4499
F-19	646+42.5000	-24.7311	5926.9142	2178816.2577	627691.3961		1164.8619
CL ABUT 8	646+50.0000	-24.7311	5926.6147	2178823.1934	627688.7818	-224543.5629	1172.2739
BF ABUT 8	646+54.3005	-24.7311	5926.4414	2178827.1745	627687.2940	-224554.9037	1176.5239
LONGITUDINAL LINE: WEB W.P. 2							
BF ABUT 1	634+58.3573	-14.2375	5930.4133	2177937.9938	628419.5612	-85788.8035	0.0000
CL ABUT 1	634+62.6700	-14.2375	5930.5601	2177939.7614	628415.6963	-85790.7492	4.2500
F-1	634+68.4730	-14.2375	5930.7559	2177942.1667	628410.5081		9.9686
F-2	634+74.2760	-14.2375	5930.9495	2177944.6026	628405.3343		15.6872
F-3	634+80.0790	-14.2375	5931.1410	2177947.0692	628400.1750		21.4058
F-4	634+85.8820	-14.2375	5931.3304	2177949.5664	628395.0304		27.1244
F-5	634+91.6850	-14.2375	5931.5177	2177952.0940	628389.9008		32.8430
F-6	634+97.4880	-14.2375	5931.7029	2177954.6519	628384.7862		38.5616
F-7	635+03.2910	-14.2376	5931.8863	2177957.2402	628379.6868		44.2802
F-8	635+09.0940	-14.2376	5932.0677	2177959.8586	628374.6029		49.9988
F-9	635+14.8970	-14.2376	5932.2472	2177962.5071	628369.5346		55.7174
F-10	635+20.7000	-14.2376	5932.4248	2177965.1857	628364.4821		61.4360
F-11	635+26.5030	-14.2376	5932.6005	2177967.8941	628359.4456		67.1546
F-12	635+32.3060	-14.2377	5932.7743	2177970.6323	628354.4252		72.8732
F-13	635+38.1090	-14.2377	5932.9462	2177973.4003	628349.4211		78.5918
F-14	635+43.9120	-14.2377	5933.1161	2177976.1979	628344.4336		84.3104
F-15	635+49.7150	-14.2378	5933.2842	2177979.0250	628339.4627		90.0290
F.S. 1	635+49.7300	-14.2378	5933.2846	2177979.0323	628339.4498	-89860.5014	90.0438
F-16	635+55.5180	-14.2378	5933.4503	2177981.8815	628334.5086		95.7476
F-17	635+61.3210	-14.2379	5933.6146	2177984.7673	628329.5716		101.4662
F-18	635+67.1240	-14.2379	5933.7769	2177987.6824	628324.6518		107.1848
F-19	635+72.9270	-14.2380	5933.9373	2177990.6266	628319.7493		112.9034
CL PIER 2	635+78.7300	-14.2381	5934.0958	2177993.5998	628314.8644	-91468.9548	118.6220
F-1	635+86.5641	-14.2382	5934.3068	2177997.6595	628308.2978		126.3422
F-2	635+94.3983	-14.2383	5934.5143	2178001.7716	628301.7639		134.0624
F-3	636+02.2324	-14.2384	5934.7180	2178005.9358	628295.2632		141.7826
F.S. 2	636+07.7300	-14.2385	5934.8588	2178008.8891	628290.7213	-93219.5440	147.2002
F-4	636+10.0665	-14.2385	5934.9180	2178010.1520	628288.7960		149.5027
F-5	636+17.9006	-14.2386	5935.1141	2178014.4198	628282.3627		157.2229
PCC F2/F3	636+18.5587	-14.2386	5935.1304	2178014.7806	628281.8239	-93911.9320	157.8714
F-6	636+25.7002	-14.2387	5935.3056	2178018.7318	628275.9590		164.9431
F-7	636+33.4966	-14.2388	5935.4932	2178023.0781	628269.5785		172.6633
F-8	636+41.2931	-14.2389	5935.6770	2178027.4585	628263.2214		180.3835
F-9	636+49.0895	-14.2390	5935.8569	2178031.8729	628256.8878		188.1037
F-10	636+56.8859	-14.2391	5936.0327	2178036.3211	628250.5779		195.8238
F-11	636+64.6823	-14.2392	5936.2044	2178040.8030	628244.2919		203.5440
F-12	636+72.4787	-14.2393	5936.3719	2178045.3184	628238.0300		211.2642
F-13	636+80.2751	-14.2393	5936.5353	2178049.8674	628231.7923		218.9844
F-14	636+88.0715	-14.2394	5936.6945	2178054.4496	628225.5791		226.7046
F.S. 3	636+95.8500	-14.2395	5936.8493	2178059.0544	628219.4047	-97570.9456	234.4070
F-15	636+95.8679	-14.2395	5936.8496	2178059.0650	628219.3905		234.4248
F-16	637+03.6644	-14.2395	5937.0006	2178063.7135	628213.2267		242.1449
F-17	637+11.4608	-14.2395	5937.1474	2178068.3949	628207.0878		249.8651
F-18	637+19.2572	-14.2396	5937.2901	2178073.1091	628200.9741		257.5853
F-19	637+27.0536	-14.2396	5937.4287	2178077.8560	628194.8857		265.3055
CL PIER 3	637+34.8500	-14.2396	5937.5631	2178082.6354	628188.8228	-99636.8305	273.0257
F-1	637+44.4090	-14.2396	5937.7223	2178088.5394	628181.4243		282.4912
F-2	637+53.9680	-14.2396	5937.8755	2178094.4919	628174.0647		291.9568
F-3	637+63.5270	-14.2396	5938.0231	2178100.4926	628166.7443		301.4223
F-4	637+73.0860	-14.2396	5938.1649	2178106.5411	628159.4634		310.8878
F.S. 4	637+73.8500	-14.2396	5938.1760	2178107.0266	628158.8832	-101866.4158	311.6444
F-5	637+82.6450	-14.2396	5938.3011	2178112.6374	628152.2224		320.3534
F-6	637+92.2040	-14.2396	5938.4315	2178118.7810	628145.0216		329.8189
F-7	638+01.7630	-14.2396	5938.5563	2178124.9718	628137.8612		339.2844
F-8	638+11.3220	-14.2396	5938.6753	2178131.2094	628130.7417		348.7500
F-9	638+20.8810	-14.2396	5938.7887	2178137.4936	628123.6632		358.2155
F-10	638+30.4400	-14.2396	5938.8963	2178143.8241	628116.6261		367.6811
F-11	638+39.9990	-14.2396	5938.9983	2178150.2007	628109.6308		377.1466
F-12	638+49.5580	-14.2396	5939.0945	2178156.6231	628102.6774		386.6121
F-13	638+59.1170	-14.2396	5939.1850	2178163.0910	628095.7663		396.0777
F-14	638+68.6760	-14.2396	5939.2699	2178169.6041	628088.8979		405.5432
F.S. 5	638+78.0300	-14.2396	5939.3474	2178176.0210	628082.2182	-108741.1882	414.8058
F-15	638+78.2350	-14.2396	5939.3490	2178176.1621	628082.0723		415.0087
F-16	638+87.7940	-14.2396	5939.4225	2178182.7648	628075.2899		424.4743
F-17	638+97.3530	-14.2396	5939.4902	2178189.4118	628068.5510		433.9398
F-18	639+06.9120	-14.2396	5939.5523	2178196.1030	628061.8559		443.4054
F-19	639+16.4710	-14.2396	5939.6086	2178202.8379	628055.2048		452.8709
CL PIER 4	639+26.0300	-14.2396	5939.6592	2178209.6164	628048.5981	-112431.0481	462.3364
F-1	639+35.6460	-14.2396	5939.7044	2178216.4788	628041.9970		471.8584
F-2	639+45.2620	-14.2396	5939.7438	2178223.3848	628035.4414		481.3804
F-3	639+54.8780	-14.2396	5939.7775	2178230.3338	628028.9315		490.9024
F-4	639+64.4940	-14.2396	5939.8054	2178237.3257	628022.4677		500.4244
F.S. 6	639+74.0300	-14.2396	5939.8273	2178244.3014	628016.1033	-116509.1559	509.8671
F-5	639+74.1100	-14.2396	5939.8275	2178244.3601	628016.0501		509.9463
F-6	639+83.7260	-14.2396	5939.8438	2178251.4367	628009.6792		519.4683
F-7	639+93.3420	-14.2396	5939.8544	2178258.5552	628003.3550		528.9903
F-8	640+02.9580	-14.2396	5939.8592	2178265.7153	627997.0781		538.5123
F-9	640+12.5740	-14.2396	5939.8583	2178272.9168	627990.8485		548.0343
F-10	640+22.1900	-14.2396	5939.8516	2178280.1592	627984.6666		557.5562
F-11	640+31.8060	-14.2396	5939.8391	2178287.4422	627978.5327		567.0782
F-12	640+41.4220	-14.2396	5939.8208	2178294.7656	627972.4470		576.6002
F-13	640+51.0380	-14.2396	5939.7968	2178302.1290	627966.4098		586.1222
F-14	640+60.6540	-14.2396	5939.7670	2178309.5321	627960.4213		595.6442
F-15	640+70.2700	-14.2396	5939.7314	2178316.9746	627954.4819		605.1662
F.S. 7	640+70.3500	-14.2396	5939.7311	2178317.0367	627954.4327	-126086.5817	605.2454
F-16	640+79.8860	-14.2396	5939.6900	2178324.4562	627948.5917		614.6881
F-17	640+89.5020	-14.2396	5939.6429	2178331.9764	627942.7510		624.2101
F-18	640+99.1180	-14.2396	5939.5901	2178339.5351	627936.9602		633.7321
F-19	641+08.7340	-14.2396	5939.5314	2178347.1318	627931.2193		643.2541
CL PIER 5	641+18.3500	-14.2396	5939.4670	2178354.7663	627925.5287	-131694.2181	652.7761
F-1	641+27.9127	-14.2396	5939.3980	2178362.3956	627919.9198		662.2453
F-2	641+37.4755	-14.2397	5939.3244	2178370.0616	627914.3611		671.7145
F-3	641+47.0382	-14.2397	5939.2464	2178377.7639	627908.8529		681.1838
F-4	641+56.6009	-14.2398	5939.1639	2178385.5022	627903.3955		690.6530
F-5	641+66.1637	-14.2400	5939.0769	2178393.2763	627897.9889		700.1222
F.S. 8	641+66.3500	-14.2400	5939.0752	2178393.4281	627897.8841	-137976.0822	700.3067
F-6	641+75.7264	-14.2401	5938.9854	2178401.0856	627892.6336		709.5914
F-7	641+85.2891	-14.2403	5938.8894	2178408.9300	627887.3296		719.0607
F-8	641+94.8518	-14.2405	5938.7890	2178416.8090	627882.0773		728.5299
F-9	642+04.4146	-14.2407	5938.6840	2178424.7224	627876.8769		737.9991
F-10	642+13.9773	-14.2410	5938.5745	2178432.6698	627871.7286		747.4684
F-11	642+23.5400	-14.2413	5938.4603	2178440.6508	627866.6325		756.9376
F-12	642+33.1028	-14.2415	5938.3405	2178448.6651	627861.5890		766.4068
PCC F3/F4	642+42.2752	-14.2418	5938.2202	2178456.3832	627856.8009	-149579.2096	775.4896
F-13	642+42.6643	-14.2418	5938.2150	2178456.7122	627856.5982		775.8761
F-14	642+52.1980	-14.2421	5938.0841	2178464.7866	627851.6514		785.3453
F.S. 9	642+61.4000	-14.2423	5937.9525	2178472.6012	627846.9114	-151853.1934	794.4851
F-15	642+61.7317	-14.2423	5937.9476	2178472.8833	627846.7412		794.8146
F-16	642+71.2653	-14.2426	5937.8053	2178481.0021	627841.8677		804.2838
F-17	642+80.7990	-14.2428	5937.6564	2178489.1428	627837.0309		813.7530
F-18	642+90.3327	-14.2430	5937.5006	2178497.3054	627832.2310		823.2223
F-19	642+99.8663	-14.2432	5937.3379	2178505.4895	627827.4680		832.6915
CL PIER 6	643+09.4000	-14.2433	5937.1683	2178513.6951	627822.7421	-157932.4216	842.1607
F-1	643+18.9300	-14.2434	5936.9919	2178521.9188	627818.0551		851.6263
F-2	643+28.4600	-14.2435	5936.8086	2178530.1636	627813.4053		861.0919
F-3	643+37.9900	-14.2436	5936.6185	2178538.4294	627808.7929		870.5575
F-4	643+47.5200	-14.2437	5936.4215	2178546.7159	627804.2178		880.0231
F-5	643+57.0500	-14.2437	5936.2176	2178555.0230	627799.6803		889.4887
F.S. 10	643+57.4000	-14.2437	5936.2100	2178555.3285	627799.5143	- 164601.5400	889.8363
F-6	643+66.5800	-14.2437	5936.0068	2178563.3505	627795.1803		898.9543
F-7	643+76.1100	-14.2437	5935.7897	2178571.6983	627790.7180		908.4199
F-8	643+85.6400	-14.2437	5935.5669	2178580.0662	627786.2936		917.8855
F-9	643+95.1700	-14.2437	5935.3385	2178588.4539	627781.9070		927.3511
F-10	644+04.7000	-14.2437	5935.1044	2178596.8615	627777.5583		936.8166
F-11	644+14.2300	-14.2437	5934.8646	2178605.2886	627773.2478		946.2822
F-12	644+23.7600	-14.2437	5934.6192	2178613.7351	627768.9754		955.7478
F-13	644+33.2900	-14.2437	5934.3681	2178622.2009	627764.7412		965.2134
F-14	644+42.8200	-14.2437	5934.1113	2178630.6857	627760.5454		974.6790
F-15	644+52.3500	-14.2437	5933.8488	2178639.1894	627756.3880		984.1446
F.S. 11	644+61.0000	-14.2437	5933.6057	2178646.9241	627752.6478	-181428.3358	992.7361
F-16	644+61.8800	-14.2437	5933.5807	2178647.7119	627752.2690		993.6102
F-17	644+71.4100	-14.2437	5933.3070	2178656.2528	627748.1887		1003.0758
F-18	644+80.9400	-14.2437	5933.0275	2178664.8121	627744.1470		1012.5414
F-19	644+90.4700	-14.2437	5932.7424	2178673.3897	627740.1441		1022.0070
CL PIER 7	645+00.0000	-14.2437	5932.4516	2178681.9852	627736.1800	-188804.4972	1031.4726
F-1	645+07.5000	-14.2437	5932.2188	2178688.7623	627733.0876		1038.9219
F-2	645+15.0000	-14.2437	5931.9825	2178695.5504	627730.0194		1046.3712
F-3	645+22.5000	-14.2437	5931.7427	2178702.3494	627726.9753		1053.8205
F-4	645+30.0000	-14.2437	5931.4993	2178709.1591	627723.9555		1061.2698
F-5	645+37.5000	-14.2437	5931.2525	2178715.9796	627720.9600		1068.7191
F.S. 12	645+39.0000	-14.2437	5931.2027	2178717.3450	627720.3638	-196869.4048	1070.2090
F-6	645+45.0000	-14.2437	5931.0021	2178722.8107	627717.9887		1076.1684
F-7	645+52.5000	-14.2437	5930.7482	2178729.6523	627715.0417		1083.6177
F-8	645+60.0000	-14.2437	5930.4909	2178736.5043	627712.1191		1091.0670
F-9	645+67.5000	-14.2437	5930.2300	2178743.3668	627709.2210		1098.5164
F-10	645+75.0000	-14.2437	5929.9656	2178750.2394	627706.3472		1105.9657
F-11	645+82.5000	-14.2437	5929.6977	2178757.1223	627703.4979		1113.4150
F-12	645+90.0000	-14.2437	5929.4262	2178764.0153	627700.6732		1120.8643
F-13	645+97.5000	-14.2437	5929.1513	2178770.9182	627697.8730		1128.3136
F-14	646+05.0000	-14.2437	5928.8729	2178777.8311	627695.0974		1135.7629
F-15	646+12.5000	-14.2437	5928.5909	2178784.7539	627692.3464		1143.2122
F-16	646+20.0000	-14.2437	5928.3055	2178791.6863	627689.6200		1150.6615
F-17	646+27.5000	-14.2437	5928.0165	2178798.6285	627686.9184		1158.1108
F-18	646+35.0000	-14.2437	5927.7240	2178805.5802	627684.2414		1165.5602
F-19	646+42.5000	-14.2437	5927.4280	2178812.5414	627681.5892		1173.0095
CL ABUT 8	646+50.0000	-14.2437	5927.1286	2178819.5119	627678.9618	-224533.0755	1180.4588
BF ABUT 8	646+54.2789	-14.2437	5926.9561	2178823.4930	627677.4740	-224544.4163	1184.7088

NOTE: ELEVATIONS ARE AT TOP OF CONCRETE DECK 0.1667 FEET BELOW FINISHED GRADE.

E-470
Engineer 470 Partnership

DIVISION OF HIGHWAYS

BRIDGE DECK ELEVATIONS

RAMP F

Designer	J. Stapleton	Structure Numbers	F-17-JX
Detailer	D. Kurschinski		

Drawing Number B-48 of 52 Drawings

Revision Dates (Preliminary Stage Only)

UDA2:[200,32]SFBDE0114.90X

BRIDGE DECK ELEVATIONS

REVISIONS		
A-1 4-2-90	Revised Geometry	J.L.S.

AS CONSTRUCTED
NO REVISIONS ☐ REVISED ☐ VOID ☐

FED. ROAD REGION	DIVISION	PROJ. NO.	SHEET NO.	SHEET TOTALS
VIII	COLORADO	IA06/1802	204	

60

BENT LINE DESCRIPTION OR FRACTIONAL POINT DESIGNATION	STATION	OFFSET	ELEVATION	COORDINATES FROM LAYOUT LINE EAST	NORTH	BENT LINE LENGTH FROM N-GRID or OFFSET FROM EXTERIOR GIRDER	GIRDER LINE LENGTH
LONGITUDINAL LINE: WEB W.P. 3							
BF ABUT 1	634+58.4036	-3.7625	5931.1377	2177928.4772	628415.1835	-85778.3283	0.0000
CL ABUT 1	634+62.6700	-3.7625	5931.2829	2177930.2449	628411.3186	-85780.2741	4.2500
F-1	634+68.4730	-3.7625	5931.4786	2177932.6763	628406.0741		10.0307
F-2	634+74.2760	-3.7625	5931.6722	2177935.1387	628400.8441		15.8114
F-3	634+80.0790	-3.7625	5931.8638	2177937.6321	628395.6288		21.5921
F-4	634+85.8820	-3.7625	5932.0532	2177940.1564	628390.4284		27.3728
F-5	634+91.6850	-3.7625	5932.2405	2177942.7114	628385.2430		33.1535
F-6	634+97.4880	-3.7625	5932.4257	2177945.2972	628380.0728		38.9342
F-7	635+03.2910	-3.7624	5932.6089	2177947.9135	628374.9181		44.7149
F-8	635+09.0940	-3.7624	5932.7900	2177950.5603	628369.7790		50.4956
F-9	635+14.8970	-3.7624	5932.9690	2177953.2376	628364.6557		56.2763
F-10	635+20.7000	-3.7624	5933.1461	2177955.9452	628359.5483		62.0570
F-11	635+26.5030	-3.7624	5933.3210	2177958.6829	628354.4570		67.8377
F-12	635+32.3060	-3.7623	5933.4939	2177961.4509	628349.3821		73.6184
F-13	635+38.1090	-3.7623	5933.6648	2177964.2488	628344.3236		79.3991
F-14	635+43.9120	-3.7623	5933.8336	2177967.0767	628339.2819		85.1798
F-15	635+49.7150	-3.7622	5934.0004	2177969.9344	628334.2570		90.9605
F.S. 1	635+49.7300	-3.7622	5934.0008	2177969.9419	628334.2440	-89850.0259	90.9754
F-16	635+55.5180	-3.7622	5934.1651	2177972.8219	628329.2491		96.7412
F-17	635+61.3210	-3.7621	5934.3278	2177975.7390	628324.2584		102.5219
F-18	635+67.1240	-3.7621	5934.4884	2177978.6856	628319.2851		108.3026
F-19	635+72.9270	-3.7620	5934.6470	2177981.6616	628314.3293		114.0833
CL PIER 2	635+78.7300	-3.7619	5934.8035	2177984.6670	628309.3913	-91458.4787	119.8640
F-1	635+86.5434	-3.7618	5935.0110	2177988.7597	628302.7708		127.6473
F-2	635+94.3567	-3.7617	5935.2148	2177992.9050	628296.1833		135.4306
F-3	636+02.1701	-3.7616	5935.4148	2177997.1028	628289.6290		143.2140
F.S. 2	636+07.7300	-3.7615	5935.5548	2178000.1217	628284.9856	-93209.0671	148.7525
F-4	636+09.9834	-3.7615	5935.6110	2178001.3528	628283.1085		150.9973
F-5	636+17.7968	-3.7614	5935.8034	2178005.6547	628276.6220		158.7806
PCC F2/F3	636+18.5587	-3.7614	5935.8219	2178006.0770	628275.9914	-93901.4548	159.5396
F-6	636+25.6013	-3.7613	5935.9917	2178010.0014	628270.1655		166.5640
F-7	636+33.4048	-3.7612	5936.1763	2178014.3826	628263.7324		174.3473
F-8	636+41.2082	-3.7611	5936.3571	2178018.7983	628257.3229		182.1307
F-9	636+49.0117	-3.7610	5936.5340	2178023.2482	628250.9371		189.9140
F-10	636+56.8152	-3.7609	5936.7070	2178027.7323	628244.5753		197.6973
F-11	636+64.6187	-3.7608	5936.8762	2178032.2504	628238.2376		205.4807
F-12	636+72.4222	-3.7607	5937.0414	2178036.8024	628231.9241		213.2640
F-13	636+80.2256	-3.7607	5937.2028	2178041.3882	628225.6352		221.0473
F-14	636+88.0291	-3.7606	5937.3603	2178046.0076	628219.3710		228.8307
F-15	636+95.8326	-3.7605	5937.5139	2178050.6606	628213.1315		236.6140
F.S. 3	636+95.8500	-3.7605	5937.5142	2178050.6710	628213.1177	-97560.4666	236.6313
F-16	637+03.6361	-3.7605	5937.6636	2178055.3469	628206.9172		244.3973
F-17	637+11.4396	-3.7605	5937.8094	2178060.0664	628200.7280		252.1806
F-18	637+19.2430	-3.7604	5937.9513	2178064.8191	628194.5642		259.9640
F-19	637+27.0465	-3.7604	5938.0893	2178069.6047	628188.4259		267.7473
CL PIER 3	637+34.8500	-3.7604	5938.2235	2178074.4231	628182.3134	-99626.3512	275.5306
F-1	637+44.4090	-3.7604	5938.3825	2178080.3701	628174.8611		285.0650
F-2	637+53.9680	-3.7604	5938.5357	2178086.3658	628167.4480		294.5993
F-3	637+63.5270	-3.7604	5938.6833	2178092.4100	628160.0744		304.1336
F-4	637+73.0860	-3.7604	5938.8251	2178098.5026	628152.7407		313.6679
F.S. 4	637+73.8500	-3.7604	5938.8362	2178098.9916	628152.1562	-101855.9366	314.4300
F-5	637+82.6450	-3.7604	5938.9613	2178104.6431	628145.4470		323.2022
F-6	637+92.2040	-3.7604	5939.0917	2178110.8314	628138.1939		332.7366
F-7	638+01.7630	-3.7604	5939.2165	2178117.0671	628130.9815		342.2709
F-8	638+11.3220	-3.7604	5939.3355	2178123.3501	628123.8102		351.8052
F-9	638+20.8810	-3.7604	5939.4489	2178129.6799	628116.6803		361.3395
F-10	638+30.4400	-3.7604	5939.5565	2178136.0565	628109.5921		370.8738
F-11	638+39.9990	-3.7604	5939.6584	2178142.4794	628102.5459		380.4082
F-12	638+49.5580	-3.7604	5939.7547	2178148.9484	628095.5420		389.9425
F-13	638+59.1170	-3.7604	5939.8452	2178155.4633	628088.5807		399.4768
F-14	638+68.6760	-3.7604	5939.9301	2178162.0237	628081.6624		409.0111
F.S. 5	638+78.0300	-3.7604	5940.0076	2178168.4873	628074.9342	-108730.7090	418.3410
F-15	638+78.2350	-3.7604	5940.0092	2178168.6294	628074.7872		418.5454
F-16	638+87.7940	-3.7604	5940.0827	2178175.2801	628067.9555		428.0798
F-17	638+97.3530	-3.7604	5940.1504	2178181.9754	628061.1677		437.6141
F-18	639+06.9120	-3.7604	5940.2124	2178188.7152	628054.4239		447.1484
F-19	639+16.4710	-3.7604	5940.2688	2178195.4991	628047.7245		456.6827
CL PIER 4	639+26.0300	-3.7604	5940.3194	2178202.3268	628041.0698	-112420.5689	466.2170
F-1	639+35.6460	-3.7604	5940.3646	2178209.2391	628034.4207		475.8082
F-2	639+45.2620	-3.7604	5940.4040	2178216.1952	628027.8175		485.3994
F-3	639+54.8780	-3.7604	5940.4377	2178223.1947	628021.2603		494.9905
F-4	639+64.4940	-3.7604	5940.4656	2178230.2374	628014.7495		504.5817
F.S. 6	639+74.0300	-3.7604	5940.4875	2178237.2638	628008.3389	-116498.6767	514.0931
F-5	639+74.1100	-3.7604	5940.4877	2178237.3229	628008.2853		514.1729
F-6	639+83.7260	-3.7604	5940.5040	2178244.4510	628001.8680		523.7641
F-7	639+93.3420	-3.7604	5940.5146	2178251.6212	627995.4979		533.3552
F-8	640+02.9580	-3.7604	5940.5194	2178258.8334	627989.1754		542.9464
F-9	640+12.5740	-3.7604	5940.5185	2178266.0871	627982.9005		552.5376
F-10	640+22.1900	-3.7604	5940.5117	2178273.3822	627976.6737		562.1288
F-11	640+31.8060	-3.7604	5940.4992	2178280.7181	627970.4953		571.7199
F-12	640+41.4220	-3.7604	5940.4810	2178288.0947	627964.3653		581.3111
F-13	640+51.0380	-3.7604	5940.4569	2178295.5117	627958.2842		590.9023
F-14	640+60.6540	-3.7604	5940.4271	2178302.9686	627952.2523		600.4934
F-15	640+70.2700	-3.7604	5940.3916	2178310.4651	627946.2697		610.0846
F.S. 7	640+70.3500	-3.7604	5940.3913	2178310.5277	627946.2201	-126076.1024	610.1644
F-16	640+79.8860	-3.7604	5940.3502	2178318.0010	627940.3367		619.6758
F-17	640+89.5020	-3.7604	5940.3031	2178325.5760	627934.4536		629.2670
F-18	640+99.1180	-3.7604	5940.2502	2178333.1895	627928.6206		638.8581
F-19	641+08.7340	-3.7604	5940.1916	2178340.8415	627922.8380		648.4493
CL PIER 5	641+18.3500	-3.7604	5940.1272	2178348.5314	627917.1061	-131683.7389	658.0405
F-1	641+27.9052	-3.7604	5940.0577	2178356.2101	627911.4609		667.5710
F-2	641+37.4604	-3.7603	5939.9828	2178363.9256	627905.8661		677.1015
F-3	641+47.0156	-3.7603	5939.9025	2178371.6776	627900.3220		686.6320
F-4	641+56.5708	-3.7602	5939.8169	2178379.4658	627894.8289		696.1626
F-5	641+66.1260	-3.7600	5939.7258	2178387.2899	627889.3870		705.6931
F.S. 8	641+66.3500	-3.7600	5939.7236	2178387.4737	627889.2600	-137965.6022	705.9165
F-6	641+75.6812	-3.7599	5939.6294	2178395.1495	627883.9965		715.2236
F-7	641+85.2363	-3.7597	5939.5277	2178403.0442	627878.6576		724.7541
F-8	641+94.7915	-3.7595	5939.4205	2178410.9738	627873.3707		734.2847
F-9	642+04.3467	-3.7593	5939.3080	2178418.9380	627868.1358		743.8152
F-10	642+13.9019	-3.7590	5939.1901	2178426.9362	627862.9534		753.3457
F-11	642+23.4571	-3.7587	5939.0668	2178434.9683	627857.8234		762.8762
F-12	642+33.0123	-3.7585	5938.9378	2178443.0339	627852.7463		772.4067
PCC F3/F4	642+42.2752	-3.7582	5938.8073	2178450.8844	627847.8752	-149568.7261	781.6457
F-13	642+42.5673	-3.7582	5938.8031	2178451.1326	627847.7222		781.9372
F-14	642+52.1148	-3.7579	5938.6628	2178459.2587	627842.7427		791.4677
F.S. 9	642+61.4000	-3.7577	5938.5209	2178467.1831	627837.9353	-151842.7088	800.7364
F-15	642+61.6623	-3.7577	5938.5168	2178467.4073	627837.8000		800.9983
F-16	642+71.2099	-3.7574	5938.3651	2178475.5783	627832.8942		810.5288
F-17	642+80.7574	-3.7572	5938.2075	2178483.7713	627828.0255		820.0593
F-18	642+90.3049	-3.7570	5938.0438	2178491.9864	627823.1941		829.5898
F-19	642+99.8525	-3.7568	5937.8742	2178500.2233	627818.3999		839.1203
CL PIER 6	643+09.4000	-3.7567	5937.6985	2178508.4819	627813.6431	-157921.9350	848.6509
F-1	643+18.9300	-3.7566	5937.5172	2178516.7466	627808.9324		858.1639
F-2	643+28.4600	-3.7565	5937.3298	2178525.0327	627804.2592		867.6769
F-3	643+37.9900	-3.7564	5937.1365	2178533.3397	627799.6235		877.1899
F-4	643+47.5200	-3.7563	5936.9372	2178541.6677	627795.0254		886.7029
F-5	643+57.0500	-3.7563	5936.7320	2178550.0164	627790.4651		896.2159
F.S. 10	643+57.4000	-3.7563	5936.7243	2178550.3234	627790.2983	-164591.0526	896.5653
F-6	643+66.5800	-3.7563	5936.5207	2178558.3856	627785.9425		905.7289
F-7	643+76.1100	-3.7563	5936.3036	2178566.7752	627781.4579		915.2419
F-8	643+85.6400	-3.7563	5936.0808	2178575.1850	627777.0113		924.7550
F-9	643+95.1700	-3.7563	5935.8524	2178583.6148	627772.6027		934.2680
F-10	644+04.7000	-3.7563	5935.6183	2178592.0645	627768.2323		943.7810
F-11	644+14.2300	-3.7563	5935.3785	2178600.5339	627763.9002		953.2940
F-12	644+23.7600	-3.7563	5935.1330	2178609.0227	627759.6064		962.8070
F-13	644+33.2900	-3.7563	5934.8819	2178617.5309	627755.3510		972.3200
F-14	644+42.8200	-3.7563	5934.6252	2178626.0582	627751.1341		981.8330
F-15	644+52.3500	-3.7563	5934.3627	2178634.6045	627746.9559		991.3461
F.S. 11	644+61.0000	-3.7563	5934.1196	2178642.3780	627743.1969	-181417.8483	999.9806
F-16	644+61.8800	-3.7563	5934.0946	2178643.1696	627742.8163		1000.8591
F-17	644+71.4100	-3.7563	5933.8208	2178651.7534	627738.7155		1010.3721
F-18	644+80.9400	-3.7563	5933.5414	2178660.3556	627734.6536		1019.8851
F-19	644+90.4700	-3.7563	5933.2563	2178668.9761	627730.6306		1029.3981
CL PIER 7	645+00.0000	-3.7563	5932.9655	2178677.6147	627726.6466	-188794.0098	1038.9111
F-1	645+07.5000	-3.7563	5932.7327	2178684.4258	627723.5308		1046.3978
F-2	645+15.0000	-3.7563	5932.4964	2178691.2479	627720.4552		1053.8844
F-3	645+22.5000	-3.7563	5932.2566	2178698.0809	627717.3959		1061.3710
F-4	645+30.0000	-3.7563	5932.0132	2178704.9248	627714.3609		1068.8576
F-5	645+37.5000	-3.7563	5931.7664	2178711.7794	627711.3504		1076.3443
F.S. 12	645+39.0000	-3.7563	5931.7166	2178713.1516	627710.7512	-196858.9174	1077.8416
F-6	645+45.0000	-3.7563	5931.5160	2178718.6447	627708.3642		1083.8309
F-7	645+52.5000	-3.7563	5931.2621	2178725.5206	627705.4025		1091.3175
F-8	645+60.0000	-3.7563	5931.0047	2178732.4070	627702.4652		1098.8042
F-9	645+67.5000	-3.7563	5930.7438	2178739.3038	627699.5525		1106.2908
F-10	645+75.0000	-3.7563	5930.4794	2178746.2109	627696.6644		1113.7774
F-11	645+82.5000	-3.7563	5930.2115	2178753.1282	627693.8009		1121.2641
F-12	645+90.0000	-3.7563	5929.9401	2178760.0557	627690.9620		1128.7507
F-13	645+97.5000	-3.7563	5929.6652	2178766.9933	627688.1477		1136.2373
F-14	646+05.0000	-3.7563	5929.3868	2178773.9408	627685.3582		1143.7240
F-15	646+12.5000	-3.7563	5929.1048	2178780.8982	627682.5934		1151.2106
F-16	646+20.0000	-3.7563	5928.8194	2178787.8654	627679.8534		1158.6972
F-17	646+27.5000	-3.7563	5928.5304	2178794.8424	627677.1382	-	1166.1839
F-18	646+35.0000	-3.7563	5928.2379	2178801.8289	627674.4479		1173.6705
F-19	646+42.5000	-3.7563	5927.9419	2178808.8250	627671.7824		1181.1571
CL ABUT 8	646+50.0000	-3.7563	5927.6424	2178815.8305	627669.1418	-224522.5881	1188.6438
BF ABUT 8	646+54.2576	-3.7563	5927.4709	2178819.8115	627667.6539	-224533.9289	1192.8938
LONGITUDINAL LINE: HORIZ. CONT. LINE							
BF ABUT 1	634+58.4200	0.0000	5931.3979	2177925.0590	628413.6111	-85774.5658	0.0000
CL ABUT 1	634+62.6700	0.0000	5931.5425	2177926.8267	628409.7463	-85776.5116	4.2500
F-1	634+68.4730	0.0000	5931.7382	2177929.2675	628404.4815		10.0530
F-2	634+74.2760	0.0000	5931.9319	2177931.7395	628399.2313		15.8560
F-3	634+80.0790	0.0000	5932.1234	2177934.2425	628393.9959		21.6590
F-4	634+85.8820	0.0000	5932.3128	2177936.7765	628388.7754		27.4620
F-5	634+91.6850	0.0000	5932.5001	2177939.3414	628383.5700		33.2650
F-6	634+97.4880	0.0000	5932.6853	2177941.9371	628378.3799		39.0680
F-7	635+03.2910	0.0000	5932.8684	2177944.5635	628373.2053		44.8710
F-8	635+09.0940	0.0000	5933.0494	2177947.2206	628368.0464		50.6740
F-9	635+14.8970	0.0000	5933.2283	2177949.9082	628362.9033		56.4770
F-10	635+20.7000	0.0000	5933.4051	2177952.6262	628357.7762		62.2800
F-11	635+26.5030	0.0000	5933.5798	2177955.3746	628352.6653		68.0830
F-12	635+32.3060	0.0000	5933.7524	2177958.1532	628347.5708		73.8860
F-13	635+38.1090	0.0000	5933.9229	2177960.9620	628342.4929		79.6890
F-14	635+43.9120	0.0000	5934.0913	2177963.8008	628337.4317		85.4920
F-15	635+49.7150	0.0000	5934.2576	2177966.6696	628332.3874		91.2950
F.S. 1	635+49.7300	0.0000	5934.2580	2177966.6771	628332.3744	-89846.2636	91.3100
F-16	635+55.5180	0.0000	5934.4218	2177969.5683	628327.3602		97.0980
F-17	635+61.3210	0.0000	5934.5839	2177972.4967	628322.3503		102.9010
F-18	635+67.1240	0.0000	5934.7439	2177975.4547	628317.3578		108.7040
F-19	635+72.9270	0.0000	5934.9018	2177978.4423	628312.3830		114.5070
CL PIER 2	635+78.7300	0.0000	5935.0576	2177981.4593	628307.4260	-91454.7167	120.3100
F-1	635+86.5360	0.0000	5935.2638	2177985.5639	628300.7862		128.1160
F-2	635+94.3420	0.0000	5935.4663	2177989.7214	628294.1795		135.9220
F-3	636+02.1480	0.0000	5935.6649	2177993.9313	628287.6061		143.7280
F.S. 2	636+07.7300	0.0000	5935.8047	2177996.9740	628282.9262	-93205.3055	149.3100
F-4	636+09.9540	0.0000	5935.8598	2177998.1936	628281.0665		151.5340
F-5	636+17.7600	0.0000	5936.0508	2178002.5079	628274.5611		159.3400
PCC F2/F3	636+18.5587	0.0000	5936.0702	2178002.9523	628273.8975	-93897.6934	160.1387
F-6	636+25.5660	0.0000	5936.2381	2178006.8672	628268.0858		167.1460
F-7	636+33.3720	0.0000	5936.4215	2178011.2611	628261.6339		174.9520
F-8	636+41.1780	0.0000	5936.6012	2178015.6896	628255.2057		182.7580
F-9	636+48.9840	0.0000	5936.7770	2178020.1524	628248.8013		190.5640
F-10	636+56.7900	0.0000	5936.9491	2178024.6495	628242.4209		198.3700
F-11	636+64.5960	0.0000	5937.1173	2178029.1808	628236.0647		206.1760
F-12	636+72.4020	0.0000	5937.2818	2178033.7460	628229.7328		213.9820
F-13	636+80.2080	0.0000	5937.4424	2178038.3451	628223.4256		221.7880
F-14	636+88.0140	0.0000	5937.5992	2178042.9780	628217.1431		229.5940
F-15	636+95.8200	0.0000	5937.7523	2178047.6445	628210.8855		237.4000
F.S. 3	636+95.8500	0.0000	5937.7529	2178047.6625	628210.8615	-97556.7061	237.4300
F-16	637+03.6260	0.0000	5937.9015	2178052.3444	628204.6530		245.2060
F-17	637+11.4320	0.0000	5938.0469	2178057.0777	628198.4457		253.0120
F-18	637+19.2380	0.0000	5938.1886	2178061.8442	628192.2640		260.8180
F-19	637+27.0440	0.0000	5938.3264	2178066.6437	628186.1078		268.6240
CL PIER 3	637+34.8500	0.0000	5938.4604	2178071.4761	628179.9775	-99622.5908	276.4300
F-1	637+44.4090	0.0000	5938.6194	2178077.4385	628172.5060		285.9890
F-2	637+53.9680	0.0000	5938.7726	2178083.4498	628165.0737		295.5480
F-3	637+63.5270	0.0000	5938.9202	2178089.5097	628157.6810		305.1070
F-4	637+73.0860	0.0000	5939.0620	2178095.6180	628150.3282		314.6660
F.S. 4	637+73.8500	0.0000	5939.0731	2178096.1083	628149.7423	-101852.1762	315.4300
F-5	637+82.6450	0.0000	5939.1982	2178101.7744	628143.0157		324.2250
F-6	637+92.2040	0.0000	5939.3286	2178107.9787	628135.7438		333.7840
F-7	638+01.7630	0.0000	5939.4534	2178114.2306	628128.5128		343.3430
F-8	638+11.3220	0.0000	5939.5724	2178120.5298	628121.3229		352.9020
F-9	638+20.8810	0.0000	5939.6858	2178126.8761	628114.1745		362.4610
F-10	638+30.4400	0.0000	5939.7934	2178133.2691	628107.0680		372.0200
F-11	638+39.9990	0.0000	5939.8953	2178139.7087	628100.0036		381.5790
F-12	638+49.5580	0.0000	5939.9916	2178146.1945	628092.9815		391.1380
F-13	638+59.1170	0.0000	5940.0821	2178152.7262	628086.0022		400.6970
F-14	638+68.6760	0.0000	5940.1670	2178159.3036	628079.0659		410.2560
F.S. 5	638+78.0300	0.0000	5940.2445	2178165.7839	628072.3203	-108726.9486	419.6100
F-15	638+78.2350	0.0000	5940.2461	2178165.9264	628072.1730		419.8150
F-16	638+87.7940	0.0000	5940.3196	2178172.5942	628065.3236		429.3740
F-17	638+97.3530	0.0000	5940.3873	2178179.3069	628058.5182		438.9330
F-18	639+06.9120	0.0000	5940.4493	2178186.0641	628051.7570		448.4920
F-19	639+16.4710	0.0000	5940.5057	2178192.8656	628045.0402		458.0510
CL PIER 4	639+26.0300	0.0000	5940.5563	2178199.7109	628038.3683	-112416.8085	467.6100
F-1	639+35.6460	0.0000	5940.6015	2178206.6412	628031.7020		477.2260
F-2	639+45.2620	0.0000	5940.6409	2178213.6153	628025.0817		486.8420
F-3	639+54.8780	0.0000	5940.6746	2178220.6330	628018.5075		496.4580
F-4	639+64.4940	0.0000	5940.7025	2178227.6939	628011.9798		506.0740
F.S. 6	639+74.0300	0.0000	5940.7244	2178234.7384	628005.5526	-116494.9163	515.6100
F-5	639+74.1100	0.0000	5940.7246	2178234.7977	628005.4989		515.6900
F-6	639+83.7260	0.0000	5940.7409	2178241.9442	627999.0650		525.3060
F-7	639+93.3420	0.0000	5940.7515	2178249.1330	627992.6785		534.9220
F-8	640+02.9580	0.0000	5940.7563	2178256.3639	627986.3395		544.5380
F-9	640+12.5740	0.0000	5940.7554	2178263.6364	627980.0485		554.1540
F-10	640+22.1900	0.0000	5940.7486	2178270.9503	627973.8056		563.7700
F-11	640+31.8060	0.0000	5940.7362	2178278.3052	627967.6111		573.3860
F-12	640+41.4220	0.0000	5940.7179	2178285.7009	627961.4653		583.0020
F-13	640+51.0380	0.0000	5940.6939	2178293.1371	627955.3685		592.6180
F-14	640+60.6540	0.0000	5940.6641	2178300.6133	627949.3209		602.2340
F-15	640+70.2700	0.0000	5940.6285	2178308.1292	627943.3228		611.8500
F.S. 7	640+70.3500	0.0000	5940.6282	2178308.1919	627943.2731	-126072.3420	611.9300
F-16	640+79.8860	0.0000	5940.5871	2178315.6847	627937.3744		621.4660
F-17	640+89.5020	0.0000	5940.5400	2178323.2792	627931.4761		631.0820
F-18	640+99.1180	0.0000	5940.4872	2178330.9125	627925.6280		640.6980
F-19	641+08.7340	0.0000	5940.4285	2178338.5842	627919.8305		650.3140
CL PIER 5	641+18.3500	0.0000	5940.3641	2178346.2941	627914.0837	-131679.9785	659.9300
F-1	641+27.9025	0.0000	5940.2944	2178353.9905	627908.4255		669.4825
F-2	641+37.4550	0.0000	5940.2190	2178361.7238	627902.8178		679.0350
F-3	641+47.0075	0.0000	5940.1379	2178369.4937	627897.2609		688.5875
F-4	641+56.5600	0.0000	5940.0511	2178377.2999	627891.7552		698.1400
F-5	641+66.1125	0.0000	5939.9587	2178385.1420	627886.3008		707.6925
F.S. 8	641+66.3500	0.0000	5939.9563	2178385.3374	627886.1658	-137961.8422	707.9300
F-6	641+75.6650	0.0000	5939.8605	2178393.0197	627880.8979		717.2450
F-7	641+85.2175	0.0000	5939.7566	2178400.9327	627875.5468		726.7975
F-8	641+94.7700	0.0000	5939.6471	2178408.8807	627870.2477		736.3500
F-9	642+04.3225	0.0000	5939.5318	2178416.8632	627865.0009		745.9025
F-10	642+13.8750	0.0000	5939.4109	2178424.8800	627859.8065		755.4550
F-11	642+23.4275	0.0000	5939.2843	2178432.9306	627854.6648		765.0075
F-12	642+32.9800	0.0000	5939.1520	2178441.0148	627849.5761		774.5600
PCC F3/F4	642+42.2752	0.0000	5939.0177	2178448.9132	627844.6754	-149564.9679	783.8552
F-13	642+42.5325	0.0000	5939.0140	2178449.1322	627844.5405		784.1125
F-14	642+52.0850	0.0000	5938.8702	2178457.2771	627839.5495		793.6650
F.S. 9	642+61.4000	0.0000	5938.7246	2178465.2413	627834.7182	-151838.9511	802.9800
F-15	642+61.6375	0.0000	5938.7208	2178465.4446	627834.5955		803.2175
F-16	642+71.1900	0.0000	5938.5658	2178473.6345	627829.6785		812.7700
F-17	642+80.7425	0.0000	5938.4050	2178481.8465	627824.7988		822.3225
F-18	642+90.2950	0.0000	5938.2385	2178490.0806	627819.9563		831.8750
F-19	642+99.8475	0.0000	5938.0663	2178498.3366	627815.1512		841.4275
CL PIER 6	643+09.4000	0.0000	5937.8885	2178506.6143	627810.3835	-157918.1783	850.9800
F-1	643+18.9300	0.0000	5937.7053	2178514.8939	627805.6645		860.5100
F-2	643+28.4600	0.0000	5937.5166	2178523.1947	627800.9830		870.0400
F-3	643+37.9900	0.0000	5937.3221	2178531.5167	627796.3391		879.5700
F-4	643+47.5200	0.0000	5937.1220	2178539.8596	627791.7329		889.1000
F-5	643+57.0500	0.0000	5936.9162	2178548.2232	627787.1644		898.6300
F.S. 10	643+57.4000	0.0000	5936.9085	2178548.5307	627786.9974	-164587.2963	898.9800
F-6	643+66.5800	0.0000	5936.7048	2178556.6073	627782.6339		908.1600
F-7	643+76.1100	0.0000	5936.4877	2178565.0119	627778.1412		917.6900
F-8	643+85.6400	0.0000	5936.2649	2178573.4367	627773.6866		927.2200
F-9	643+95.1700	0.0000	5936.0364	2178581.8816	627769.2702		936.7500
F-10	644+04.7000	0.0000	5935.8023	2178590.3464	627764.8920		946.2800
F-11	644+14.2300	0.0000	5935.5625	2178598.8308	627760.5521		955.8100
F-12	644+23.7600	0.0000	5935.3171	2178607.3348	627756.2506		965.3400
F-13	644+33.2900	0.0000	5935.0660	2178615.8582	627751.9877		974.8700
F-14	644+42.8200	0.0000	5934.8092	2178624.4008	627747.7633		984.4000
F-15	644+52.3500	0.0000	5934.5468	2178632.9623	627743.5776		993.9300
F.S. 11	644+61.0000	0.0000	5934.3037	2178640.7496	627739.8119	-181414.0920	1002.5800
F-16	644+61.8800	0.0000	5934.2787	2178641.5427	627739.4306		1003.4600
F-17	644+71.4100	0.0000	5934.0049	2178650.1418	627735.3225		1012.9900
F-18	644+80.9400	0.0000	5933.7255	2178658.7594	627731.2533		1022.5200
F-19	644+90.4700	0.0000	5933.4404	2178667.3953	627727.2231		1032.0500
CL PIER 7	645+00.0000	0.0000	5933.1496	2178676.0493	627723.2321	-188790.2535	1041.5800
F-1	645+07.5000	0.0000	5932.9168	2178682.8725	627720.1186		1049.0800
F-2	645+15.0000	0.0000	5932.6804	2178689.7068	627717.0296		1056.5800
F-3	645+22.5000	0.0000	5932.4406	2178696.5521	627713.9648		1064.0800
F-4	645+30.0000	0.0000	5932.1973	2178703.4081	627710.9244		1071.5800
F-5	645+37.5000	0.0000	5931.9504	2178710.2750	627707.9085		1079.0800
F.S. 12	645+39.0000	0.0000	5931.9006	2178711.6497	627707.3082	-196855.1611	1080.5800
F-6	645+45.0000	0.0000	5931.7000	2178717.1526	627704.9170		1086.5800
F-7	645+52.5000	0.0000	5931.4462	2178724.0408	627701.9500		1094.0800
F-8	645+60.0000	0.0000	5931.1888	2178730.9394	627699.0075		1101.5800
F-9	645+67.5000	0.0000	5930.9279	2178737.8485	627696.0896		1109.0800
F-10	645+75.0000	0.0000	5930.6635	2178744.7680	627693.1963		1116.5800
F-11	645+82.5000	0.0000	5930.3956	2178751.6977	627690.3276		1124.0800
F-12	645+90.0000	0.0000	5930.1242	2178758.6376	627687.4837		1131.5800
F-13	645+97.5000	0.0000	5929.8492	2178765.5875	627684.6644		1139.0800
F-14	646+05.0000	0.0000	5929.5708	2178772.5474	627681.8699		1146.5800
F-15	646+12.5000	0.0000	5929.2889	2178779.5173	627679.1002		1154.0800
F-16	646+20.0000	0.0000	5929.0034	2178786.4969	627676.3553		1161.5800
F-17	646+27.5000	0.0000	5928.7144	2178793.4863	627673.6352		1169.0800
F-18	646+35.0000	0.0000	5928.4220	2178800.4853	627670.9401		1176.5800
F-19	646+42.5000	0.0000	5928.1260	2178807.4938	627668.2698		1184.0800
CL ABUT 8	646+50.0000	0.0000	5927.8265	2178814.5119	627665.6246	-224518.8318	1191.5800
BF ABUT 8	646+54.2500	0.0000	5927.6552	2178818.4929	627664.1367	-224530.1726	1195.8300

NOTE: ELEVATIONS ARE AT TOP OF CONCRETE DECK 0.1667 FEET BELOW FINISHED GRADE.

DESIGNED BY	INITIAL	DATE
DESIGNED BY	JLS	3-90
CHECKED BY / QUANTITIES BY	WDA	3-90
DETAILED BY / CHECKED BY	DLK	3-90

E-470
Engineer 470 Partnership

DIVISION OF HIGHWAYS

BRIDGE DECK ELEVATIONS
RAMP F

Designer	J. Stapleton	Structure Numbers	F-17-JX
Detailer	D. Kurschinski		

Drawing Number B-49 of 52 Drawings

Revision Dates (Preliminary Stage Only)

STATE OF COLORADO
STATE DEPARTMENT OF HIGHWAYS
DIVISION OF HIGHWAYS:
D.O.H. FORM NO. 126:
REV. FEB. 1984

BRIDGE DECK ELEVATIONS

REVISIONS		
A-1 4-2-90	Revised Geometry	J.L.S.

AS CONSTRUCTED
NO REVISIONS ☐ REVISED ☐ VOID ☐

FED. ROAD REGION	DIVISION	PROJ. NO.	SHEET NO.	SHEET TOTAL
VIII	COLORADO	IA06/1802	205	

61

BENT LINE DESCRIPTION OR FRACTIONAL POINT DESIGNATION	STATION	OFFSET	ELEVATION	COORDINATES FROM LAYOUT LINE EAST	COORDINATES FROM LAYOUT LINE NORTH	BENT LINE LENGTH FROM N-GRID or OFFSET FROM EXTERIOR GIRDER	GIRDER LINE LENGTH
LONGITUDINAL LINE: WEB W.P. 4							
BF ABUT 1	634+58.4489	6.7126	5931.8620	2177918.9606	628410.8058	-85767.8531	0.0000
CL ABUT 1	634+62.6700	6.7126	5932.0057	2177920.7284	628406.9409	-85769.7990	4.2500
F-1	634+68.4730	6.7126	5932.2014	2177923.1859	628401.6401		10.0928
F-2	634+74.2760	6.7126	5932.3950	2177925.6748	628396.3539		15.9356
F-3	634+80.0790	6.7126	5932.5865	2177928.1950	628391.0826		21.7784
F-4	634+85.8820	6.7126	5932.7759	2177930.7464	628385.8263		27.6212
F-5	634+91.6850	6.7126	5932.9633	2177933.3288	628380.5852		33.4640
F-6	634+97.4880	6.7126	5933.1484	2177935.9424	628375.3595		39.3068
F-7	635+03.2910	6.7127	5933.3314	2177938.5868	628370.1494		45.1496
F-8	635+09.0940	6.7127	5933.5122	2177941.2620	628364.9551		50.9924
F-9	635+14.8970	6.7127	5933.6909	2177943.9680	628359.7767		56.8352
F-10	635+20.7000	6.7128	5933.8673	2177946.7046	628354.6144		62.6780
F-11	635+26.5030	6.7129	5934.0415	2177949.4718	628349.4685		68.5208
F-12	635+32.3060	6.7130	5934.2136	2177952.2694	628344.3390		74.3636
F-13	635+38.1090	6.7131	5934.3834	2177955.0974	628339.2262		80.2064
F-14	635+43.9120	6.7132	5934.5511	2177957.9556	628334.1302		86.0491
F-15	635+49.7150	6.7133	5934.7166	2177960.8439	628329.0513		91.8919
F.S. 1	635+49.7300	6.7133	5934.7170	2177960.8514	628329.0382	-89839.5503	91.9070
F-16	635+55.5180	6.7135	5934.8799	2177963.7623	628323.9895		97.7347
F-17	635+61.3210	6.7136	5935.0410	2177966.7106	628318.9452		103.5775
F-18	635+67.1240	6.7138	5935.1999	2177969.6888	628313.9184		109.4203
F-19	635+72.9270	6.7140	5935.3566	2177972.6967	628308.9093		115.2631
CL PIER 2	635+78.7300	6.7142	5935.5111	2177975.7342	628303.9182	-91448.0025	121.1059
F-1	635+86.5230	6.7145	5935.7152	2177979.8599	628297.2439		128.9524
F-2	635+94.3161	6.7148	5935.9153	2177984.0385	628290.6026		136.7989
F-3	636+02.1091	6.7151	5936.1116	2177988.2698	628283.9948		144.6454
F.S. 2	636+07.7300	6.7154	5936.2508	2177991.3543	628279.2498	-93198.5902	150.3048
F-4	636+09.9022	6.7154	5936.3041	2177992.5536	628277.4209		152.4918
F-5	636+17.6952	6.7158	5936.4928	2177996.8896	628270.8813		160.3383
PCC F2/F3	636+18.5587	6.7158	5936.5134	2177997.3733	628270.1589	-93890.9776	161.2077
F-6	636+25.5037	6.7161	5936.6780	2178001.2709	628264.3720		168.1848
F-7	636+33.3142	6.7164	5936.8595	2178005.6871	628257.8863		176.0313
F-8	636+41.1246	6.7167	5937.0372	2178010.1380	628251.4244		183.8777
F-9	636+48.9351	6.7170	5937.2111	2178014.6235	628244.9865		191.7242
F-10	636+56.7455	6.7173	5937.3814	2178019.1435	628238.5727		199.5707
F-11	636+64.5560	6.7176	5937.5481	2178023.6979	628232.1832		207.4172
F-12	636+72.3664	6.7178	5937.7111	2178028.2864	628225.8183		215.2637
F-13	636+80.1769	6.7180	5937.8704	2178032.9091	628219.4781		223.1101
F-14	636+87.9873	6.7182	5938.0261	2178037.5657	628213.1628		230.9566
F-15	636+95.7978	6.7184	5938.1782	2178042.2561	628206.8726		238.8031
F.S. 3	636+95.8500	6.7184	5938.1792	2178042.2876	628206.8306	-97549.9877	238.8556
F-16	637+03.6082	6.7185	5938.3266	2178046.9802	628200.6077		246.6496
F-17	637+11.4187	6.7186	5938.4714	2178051.7379	628194.3681		254.4961
F-18	637+19.2291	6.7187	5938.6125	2178056.5290	628188.1542		262.3426
F-19	637+27.0396	6.7188	5938.7500	2178061.3533	628181.9661		270.1890
CL PIER 3	637+34.8500	6.7188	5938.8838	2178066.2108	628175.8040	-99615.8720	278.0355
F-1	637+44.4090	6.7188	5939.0427	2178072.2007	628168.2979		287.6386
F-2	637+53.9680	6.7188	5939.1959	2178078.2397	628160.8313		297.2417
F-3	637+63.5270	6.7188	5939.3435	2178084.3275	628153.4046		306.8448
F-4	637+73.0860	6.7188	5939.4853	2178090.4640	628146.0179		316.4479
F.S. 4	637+73.8500	6.7188	5939.4964	2178090.9566	628145.4293	-101845.4574	317.2154
F-5	637+82.6450	6.7188	5939.6215	2178096.6488	628138.6717		326.0510
F-6	637+92.2040	6.7188	5939.7519	2178102.8817	628131.3662		335.6541
F-7	638+01.7630	6.7188	5939.8767	2178109.1625	628124.1018		345.2572
F-8	638+11.3220	6.7188	5939.9957	2178115.4907	628116.8787		354.8603
F-9	638+20.8810	6.7188	5940.1090	2178121.8663	628109.6974		364.4634
F-10	638+30.4400	6.7188	5940.2167	2178128.2888	628102.5581		374.0665
F-11	638+39.9990	6.7188	5940.3186	2178134.7581	628095.4610		383.6696
F-12	638+49.5580	6.7188	5940.4149	2178141.2738	628088.4066		393.2727
F-13	638+59.1170	6.7188	5940.5054	2178147.8356	628081.3951		402.8758
F-14	638+68.6760	6.7188	5940.5903	2178154.4434	628074.4268		412.4789
F.S. 5	638+78.0300	6.7188	5940.6678	2178160.9536	628067.6501	-108720.2297	421.8761
F-15	638+78.2350	6.7188	5940.6694	2178161.0967	628067.5021		422.0820
F-16	638+87.7940	6.7188	5940.7429	2178167.7954	628060.6211		431.6851
F-17	638+97.3530	6.7188	5940.8106	2178174.5390	628053.7843		441.2882
F-18	639+06.9120	6.7188	5940.8726	2178181.3274	628046.9919		450.8913
F-19	639+16.4710	6.7188	5940.9290	2178188.1602	628040.2442		460.4944
CL PIER 4	639+26.0300	6.7188	5940.9796	2178195.0372	628033.5414	-112410.0896	470.0975
F-1	639+35.6460	6.7188	5941.0248	2178201.9994	628026.8444		479.7579
F-2	639+45.2620	6.7188	5941.0642	2178209.0057	628020.1935		489.4183
F-3	639+54.8780	6.7188	5941.0979	2178216.0557	628013.5890		499.0786
F-4	639+64.4940	6.7188	5941.1258	2178223.1492	628007.0312		508.7390
F.S. 6	639+74.0300	6.7188	5941.1477	2178230.2263	628000.5744	-116488.1975	518.3190
F-5	639+74.1100	6.7188	5941.1479	2178230.2858	628000.5204		518.3993
F-6	639+83.7260	6.7188	5941.1642	2178237.4653	627994.0569		528.0597
F-7	639+93.3420	6.7188	5941.1748	2178244.6873	627987.6408		537.7201
F-8	640+02.9580	6.7188	5941.1796	2178251.9514	627981.2726		547.3804
F-9	640+12.5740	6.7188	5941.1787	2178259.2575	627974.9526		557.0408
F-10	640+22.1900	6.7188	5941.1719	2178266.6052	627968.6808		566.7012
F-11	640+31.8060	6.7188	5941.1594	2178273.9941	627962.4578		576.3615
F-12	640+41.4220	6.7188	5941.1412	2178281.4239	627956.2836		586.0219
F-13	640+51.0380	6.7188	5941.1171	2178288.8943	627950.1587		595.6823
F-14	640+60.6540	6.7188	5941.0873	2178296.4050	627944.0832		605.3426
F-15	640+70.2700	6.7188	5941.0518	2178303.9556	627938.0574		615.0030
F.S. 7	640+70.3500	6.7188	5941.0514	2178304.0186	627938.0075	-126065.6232	615.0833
F-16	640+79.8860	6.7188	5941.0104	2178311.5459	627932.0816		624.6633
F-17	640+89.5020	6.7188	5940.9633	2178319.1755	627926.1561		634.3237
F-18	640+99.1180	6.7188	5940.9104	2178326.8440	627920.2811		643.9841
F-19	641+08.7340	6.7188	5940.8518	2178334.5511	627914.4568		653.6444
CL PIER 5	641+18.3500	6.7188	5940.7874	2178342.2966	627908.6835	-131673.2597	663.3048
F-1	641+27.8978	6.7189	5940.7174	2178350.0245	627903.0019		672.8966
F-2	641+37.4455	6.7190	5940.6411	2178357.7896	627897.3710		682.4884
F-3	641+46.9933	6.7192	5940.5586	2178365.5913	627891.7911		692.0802
F-4	641+56.5410	6.7195	5940.4698	2178373.4293	627886.2623		701.6720
F-5	641+66.0888	6.7199	5940.3748	2178381.3035	627880.7850		711.2638
F.S. 8	641+66.3500	6.7199	5940.3721	2178381.5194	627880.6359	-137955.1223	711.5262
F-6	641+75.6365	6.7204	5940.2735	2178389.2133	627875.3594		720.8556
F-7	641+85.1843	6.7209	5940.1660	2178397.1584	627869.9856		730.4474
F-8	641+94.7321	6.7215	5940.0522	2178405.1386	627864.6640		740.0393
F-9	642+04.2798	6.7222	5939.9321	2178413.1535	627859.3948		749.6311
F-10	642+13.8276	6.7230	5939.8058	2178421.2027	627854.1782		759.2229
F-11	642+23.3753	6.7238	5939.6734	2178429.2859	627849.0144		768.8147
F-12	642+32.9231	6.7246	5939.5352	2178437.4028	627843.9037		778.4065
PCC F3/F4	642+42.2752	6.7254	5939.3944	2178445.3856	627838.9494	-149558.2425	787.8017
F-13	642+42.4711	6.7254	5939.3914	2178445.5529	627838.8463		787.9982
F-14	642+52.0324	6.7262	5939.2416	2178453.7308	627833.8339		797.5901
F.S. 9	642+61.4000	6.7269	5939.0893	2178461.7650	627828.9591	-151832.2242	806.9876
F-15	642+61.5937	6.7269	5939.0861	2178461.9314	627828.8587		807.1819
F-16	642+71.1549	6.7277	5938.9250	2178470.1544	627823.9208		816.7737
F-17	642+80.7162	6.7283	5938.7586	2178478.3999	627819.0202		826.3655
F-18	642+90.2775	6.7289	5938.5871	2178486.6675	627814.1572		835.9573
F-19	642+99.8387	6.7295	5938.4105	2178494.9571	627809.3318		845.5491
CL PIER 6	643+09.4000	6.7299	5938.2287	2178503.2686	627804.5442	-157911.4484	855.1409
F-1	643+18.9300	6.7303	5938.0425	2178511.5745	627799.8098		864.7013
F-2	643+28.4600	6.7306	5937.8511	2178519.9017	627795.1131		874.2617
F-3	643+37.9900	6.7308	5937.6546	2178528.2501	627790.4541		883.8222
F-4	643+47.5200	6.7310	5937.4530	2178536.6195	627785.8330		893.3826
F-5	643+57.0500	6.7311	5937.2464	2178545.0098	627781.2499		902.9431
F.S. 10	643+57.4000	6.7311	5937.2387	2178545.3183	627781.0823	-164580.5652	903.2942
F-6	643+66.5800	6.7311	5937.0346	2178553.4207	627776.7048		912.5035
F-7	643+76.1100	6.7311	5936.8175	2178561.8522	627772.1978		922.0639
F-8	643+85.6400	6.7311	5936.5947	2178570.3039	627767.7290		931.6244
F-9	643+95.1700	6.7311	5936.3663	2178578.7757	627763.2985		941.1848
F-10	644+04.7000	6.7311	5936.1321	2178587.2675	627758.9063		950.7452
F-11	644+14.2300	6.7311	5935.8924	2178595.7791	627754.5525		960.3057
F-12	644+23.7600	6.7311	5935.6469	2178604.3103	627750.2373		969.8661
F-13	644+33.2900	6.7311	5935.3958	2178612.8608	627745.9607		979.4265
F-14	644+42.8200	6.7311	5935.1390	2178621.4307	627741.7229		988.9870
F-15	644+52.3500	6.7311	5934.8766	2178630.0196	627737.5238		998.5474
F.S. 11	644+61.0000	6.7311	5934.6335	2178637.8318	627733.7461	-181407.3609	1007.2250
F-16	644+61.8800	6.7311	5934.6085	2178638.6274	627733.3636		1008.1078
F-17	644+71.4100	6.7311	5934.3347	2178647.2540	627729.2423		1017.6683
F-18	644+80.9400	6.7311	5934.0553	2178655.8991	627725.1602		1027.2287
F-19	644+90.4700	6.7311	5933.7702	2178664.5625	627721.1171		1036.7891
CL PIER 7	645+00.0000	6.7311	5933.4794	2178673.2442	627717.1133	-188783.5224	1046.3496
F-1	645+07.5000	6.7311	5933.2466	2178680.0892	627713.9899		1053.8735
F-2	645+15.0000	6.7311	5933.0103	2178686.9453	627710.8910		1061.3975
F-3	645+22.5000	6.7311	5932.7704	2178693.8124	627707.8164		1068.9214
F-4	645+30.0000	6.7311	5932.5271	2178700.6904	627704.7663		1076.4454
F-5	645+37.5000	6.7311	5932.2802	2178707.5792	627701.7408		1083.9693
F.S. 12	645+39.0000	6.7311	5932.2304	2178708.9583	627701.1386	-196848.4300	1085.4741
F-6	645+45.0000	6.7311	5932.0299	2178714.4788	627698.7397		1091.4933
F-7	645+52.5000	6.7311	5931.7760	2178721.3889	627695.7632		1099.0172
F-8	645+60.0000	6.7311	5931.5186	2178728.3096	627692.8114		1106.5412
F-9	645+67.5000	6.7311	5931.2577	2178735.2408	627689.8841		1114.0652
F-10	645+75.0000	6.7311	5930.9933	2178742.1824	627686.9816		1121.5891
F-11	645+82.5000	6.7311	5930.7254	2178749.1342	627684.1038		1129.1131
F-12	645+90.0000	6.7311	5930.4540	2178756.0962	627681.2507		1136.6370
F-13	645+97.5000	6.7311	5930.1791	2178763.0684	627678.4225		1144.1610
F-14	646+05.0000	6.7311	5929.9006	2178770.0505	627675.6190		1151.6849
F-15	646+12.5000	6.7311	5929.6187	2178777.0426	627672.8405		1159.2089
F-16	646+20.0000	6.7311	5929.3332	2178784.0446	627670.0868		1166.7328
F-17	646+27.5000	6.7311	5929.0443	2178791.0563	627667.3581		1174.2568
F-18	646+35.0000	6.7311	5928.7518	2178798.0776	627664.6543		1181.7807
F-19	646+42.5000	6.7311	5928.4558	2178805.1086	627661.9755		1189.3047
CL ABUT 8	646+50.0000	6.7311	5928.1563	2178812.1490	627659.3218	-224512.1007	1196.8286
BF ABUT 8	646+54.2365	6.7311	5927.9856	2178816.1300	627657.8339	-224523.4414	1201.0786
LONGITUDINAL LINE: RT. BARRIER FACE							
BF ABUT 1	634+58.4630	10.0000	5932.0893	2177915.9741	628409.4319	-85764.5657	0.0000
CL ABUT 1	634+62.6700	10.0000	5932.2325	2177917.7419	628405.5671	-85766.5116	4.2500
F-1	634+68.4730	10.0000	5932.4282	2177920.2076	628400.2486		10.1123
F-2	634+74.2760	10.0000	5932.6219	2177922.7048	628394.9448		15.9746
F-3	634+80.0790	10.0000	5932.8134	2177925.2334	628389.6558		21.8369
F-4	634+85.8820	10.0000	5933.0028	2177927.7932	628384.3820		27.6991
F-5	634+91.6850	10.0000	5933.1901	2177930.3843	628379.1235		33.5614
F-6	634+97.4880	10.0000	5933.3753	2177933.0066	628373.8804		39.4237
F-7	635+03.2910	10.0000	5933.5582	2177935.6598	628368.6529		45.2860
F-8	635+09.0940	10.0000	5933.7389	2177938.3440	628363.4413		51.1483
F-9	635+14.8970	10.0000	5933.9174	2177941.0591	628358.2456		57.0105
F-10	635+20.7000	10.0000	5934.0936	2177943.8049	628353.0662		62.8728
F-11	635+26.5030	10.0000	5934.2676	2177946.5814	628347.9031		68.7351
F-12	635+32.3060	10.0000	5934.4394	2177949.3884	628342.7565		74.5974
F-13	635+38.1090	10.0000	5934.6089	2177952.2258	628337.6267		80.4597
F-14	635+43.9120	10.0000	5934.7762	2177955.0937	628332.5138		86.3219
F-15	635+49.7150	10.0000	5934.9413	2177957.9918	628327.4180		92.1842
F-16	635+55.5180	10.0000	5935.1041	2177960.9200	628322.3395		98.0465
F-17	635+61.3210	10.0000	5935.2647	2177963.8783	628317.2784		103.9088
F-18	635+67.1240	10.0000	5935.4231	2177966.8666	628312.2349		109.7711
F-19	635+72.9270	10.0000	5935.5792	2177969.8847	628307.2092		115.6333
CL PIER 2	635+78.7300	10.0000	5935.7331	2177972.9325	628302.2015	-91444.7167	121.4956
F-1	635+86.5167	10.0000	5935.9361	2177977.0688	628295.5106		129.3619
F-2	635+94.3034	10.0000	5936.1350	2177981.2581	628288.8527		137.2281
F-3	636+02.0902	10.0000	5936.3301	2177985.5003	628282.2284		145.0944
F-4	636+09.8769	10.0000	5936.5214	2177989.7950	628275.6380		152.9607
F-5	636+17.6636	10.0000	5936.7089	2177994.1420	628269.0820		160.8270
PCC F2/F3	636+18.5587	10.0000	5936.7302	2177994.6451	628268.3306	-93887.6934	161.7312
F-6	636+25.4732	10.0000	5936.8931	2177998.5344	628262.5564		168.6932
F-7	636+33.2859	10.0000	5937.0737	2178002.9619	628256.0544		176.5595
F-8	636+41.0985	10.0000	5937.2504	2178007.4242	628249.5763		184.4258
F-9	636+48.9111	10.0000	5937.4233	2178011.9212	628243.1222		192.2920
F-10	636+56.7237	10.0000	5937.5927	2178016.4527	628236.6923		200.1583
F-11	636+64.5364	10.0000	5937.7585	2178021.0187	628230.2868		208.0246
F-12	636+72.3490	10.0000	5937.9208	2178025.6189	628223.9059		215.8908
F-13	636+80.1616	10.0000	5938.0795	2178030.2533	628217.5498		223.7571
F-14	636+87.9742	10.0000	5938.2346	2178034.9218	628211.2187		231.6234
F-15	636+95.7869	10.0000	5938.3862	2178039.6241	628204.9126		239.4896
F-16	637+03.5995	10.0000	5938.5342	2178044.3602	628198.6319		247.3559
F-17	637+11.4121	10.0000	5938.6786	2178049.1299	628192.3767		255.2222
F-18	637+19.2247	10.0000	5938.8195	2178053.9331	628186.1471		263.0884
F-19	637+27.0374	10.0000	5938.9568	2178058.7697	628179.9434		270.9547
CL PIER 3	637+34.8500	10.0000	5939.0906	2178063.6395	628173.7658	-99612.5908	278.8210
F-1	637+44.4090	10.0000	5939.2494	2178069.6427	628166.2429		288.4456
F-2	637+53.9680	10.0000	5939.4026	2178075.6953	628158.7596		298.0703
F-3	637+63.5270	10.0000	5939.5502	2178081.7968	628151.3161		307.6949
F-4	637+73.0860	10.0000	5939.6920	2178087.9470	628143.9129		317.3195
F-5	637+82.6450	10.0000	5939.8282	2178094.1457	628136.5502		326.9442
F-6	637+92.2040	10.0000	5939.9586	2178100.3926	628129.2284		336.5688
F-7	638+01.7630	10.0000	5940.0834	2178106.6874	628121.9477		346.1934
F-8	638+11.3220	10.0000	5940.2024	2178113.0299	628114.7084		355.8181
F-9	638+20.8810	10.0000	5940.3158	2178119.4197	628107.5110		365.4427
F-10	638+30.4400	10.0000	5940.4234	2178125.8567	628100.3556		375.0673
F-11	638+39.9990	10.0000	5940.5253	2178132.3405	628093.2427		384.6920
F-12	638+49.5580	10.0000	5940.6216	2178138.8708	628086.1724		394.3166
F-13	638+59.1170	10.0000	5940.7121	2178145.4473	628079.1452		403.9412
F-14	638+68.6760	10.0000	5940.7970	2178152.0699	628072.1613		413.5659
F-15	638+78.2350	10.0000	5940.8761	2178158.7382	628065.2210		423.1905
F-16	638+87.7940	10.0000	5940.9496	2178165.4518	628058.3246		432.8151
F-17	638+97.3530	10.0000	5941.0173	2178172.2106	628051.4725		442.4398
F-18	639+06.9120	10.0000	5941.0793	2178179.0142	628044.6648		452.0644
F-19	639+16.4710	10.0000	5941.1357	2178185.8624	628037.9020		461.6890
CL PIER 4	639+26.0300	10.0000	5941.1863	2178192.7547	628031.1842	-112406.8085	471.3137
F-1	639+35.6460	10.0000	5941.2315	2178199.7326	628024.4722		480.9957
F-2	639+45.2620	10.0000	5941.2709	2178206.7545	628017.8064		490.6777
F-3	639+54.8780	10.0000	5941.3046	2178213.8204	628011.1871		500.3598
F-4	639+64.4940	10.0000	5941.3325	2178220.9298	628004.6146		510.0418
F-5	639+74.1100	10.0000	5941.3546	2178228.0824	627998.0892		519.7238
F-6	639+83.7260	10.0000	5941.3709	2178235.2780	627991.6111		529.4058
F-7	639+93.3420	10.0000	5941.3815	2178242.5161	627985.1807		539.0879
F-8	640+02.9580	10.0000	5941.3863	2178249.7966	627978.7982		548.7699
F-9	640+12.5740	10.0000	5941.3854	2178257.1191	627972.4640		558.4519
F-10	640+22.1900	10.0000	5941.3786	2178264.4832	627966.1782		568.1339
F-11	640+31.8060	10.0000	5941.3662	2178271.8887	627959.9412		577.8160
F-12	640+41.4220	10.0000	5941.3479	2178279.3351	627953.7532		587.4980
F-13	640+51.0380	10.0000	5941.3239	2178286.8223	627947.6145		597.1800
F-14	640+60.6540	10.0000	5941.2941	2178294.3499	627941.5254		606.8620
F-15	640+70.2700	10.0000	5941.2585	2178301.9174	627935.4861		616.5441
F-16	640+79.8860	10.0000	5941.2171	2178309.5247	627929.4969		626.2261
F-17	640+89.5020	10.0000	5941.1700	2178317.1714	627923.5581		635.9081
F-18	640+99.1180	10.0000	5941.1172	2178324.8571	627917.6698		645.5902
F-19	641+08.7340	10.0000	5941.0585	2178332.5816	627911.8325		655.2722
CL PIER 5	641+18.3500	10.0000	5940.9941	2178340.3444	627906.0463	-131669.9785	664.9542
F-1	641+27.8954	10.0000	5940.9239	2178348.0878	627900.3534		674.5652
F-2	641+37.4409	10.0000	5940.8472	2178355.8684	627894.7113		684.1761
F-3	641+46.9863	10.0000	5940.7640	2178363.6858	627889.1204		693.7871
F-4	641+56.5317	10.0000	5940.6742	2178371.5397	627883.5808		703.3981
F-5	641+66.0771	10.0000	5940.5779	2178379.4297	627878.0928		713.0091
F-6	641+75.6226	10.0000	5940.4751	2178387.3555	627872.6566		722.6200
F-7	641+85.1680	10.0000	5940.3657	2178395.3168	627867.2725		732.2310
F-8	641+94.7134	10.0000	5940.2498	2178403.3132	627861.9407		741.8420
F-9	642+04.2589	10.0000	5940.1273	2178411.3443	627856.6614		751.4529
F-10	642+13.8043	10.0000	5939.9984	2178419.4099	627851.4349		761.0639
F-11	642+23.3497	10.0000	5939.8630	2178427.5096	627846.2614		770.6749
F-12	642+32.8951	10.0000	5939.7219	2178435.6430	627841.1410		780.2858
PCC F3/F4	642+42.2752	10.0000	5939.5777	2178443.6680	627836.1614	-149554.9679	789.7303
F-13	642+42.4409	10.0000	5939.5751	2178443.8097	627836.0740		789.8968
F-14	642+52.0065	10.0000	5939.4224	2178452.0043	627831.0522		799.5078
F-15	642+61.5721	10.0000	5939.2639	2178460.2217	627826.0676		809.1188
F-16	642+71.1377	10.0000	5939.0998	2178468.4615	627821.1203		818.7297
F-17	642+80.7033	10.0000	5938.9306	2178476.7237	627816.2105		828.3407
F-18	642+90.2688	10.0000	5938.7566	2178485.0082	627811.3382		837.9517
F-19	642+99.8344	10.0000	5938.5778	2178493.3146	627806.5036		847.5626
CL PIER 6	643+09.4000	10.0000	5938.3941	2178501.6429	627801.7068	-157908.1783	857.1736
F-1	643+18.9300	10.0000	5938.2062	2178509.9618	627796.9654		866.7488
F-2	643+28.4600	10.0000	5938.0136	2178518.3021	627792.2617		876.3240
F-3	643+37.9900	10.0000	5937.8161	2178526.6635	627787.5958		885.8993
F-4	643+47.5200	10.0000	5937.6138	2178535.0460	627782.9677		895.4745
F-5	643+57.0500	10.0000	5937.4067	2178543.4493	627778.3775		905.0497
F-6	643+66.5800	10.0000	5937.1948	2178551.8732	627773.8254		914.6249
F-7	643+76.1100	10.0000	5936.9777	2178560.3177	627769.3115		924.2001
F-8	643+85.6400	10.0000	5936.7549	2178568.7825	627764.8358		933.7754
F-9	643+95.1700	10.0000	5936.5264	2178577.2674	627760.3984		943.3506
F-10	644+04.7000	10.0000	5936.2923	2178585.7723	627755.9994		952.9258
F-11	644+14.2300	10.0000	5936.0525	2178594.2971	627751.6389		962.5010
F-12	644+23.7600	10.0000	5935.8071	2178602.8414	627747.3171		972.0762
F-13	644+33.2900	10.0000	5935.5560	2178611.4052	627743.0338		981.6515
F-14	644+42.8200	10.0000	5935.2992	2178619.9883	627738.7894		991.2267
F-15	644+52.3500	10.0000	5935.0368	2178628.5905	627734.5838		1000.8019
F-16	644+61.8800	10.0000	5934.7687	2178637.2116	627730.4172		1010.3771
F-17	644+71.4100	10.0000	5934.4949	2178645.8515	627726.2896		1019.9523
F-18	644+80.9400	10.0000	5934.2155	2178654.5100	627722.2011		1029.5276
F-19	644+90.4700	10.0000	5933.9304	2178663.1868	627718.1518		1039.1028
CL PIER 7	645+00.0000	10.0000	5933.6396	2178671.8819	627714.1418	-188780.2535	1048.6780
F-1	645+07.5000	10.0000	5933.4068	2178678.7375	627711.0136		1056.2136
F-2	645+15.0000	10.0000	5933.1704	2178685.6042	627707.9099		1063.7492
F-3	645+22.5000	10.0000	5932.9306	2178692.4820	627704.8306		1071.2849
F-4	645+30.0000	10.0000	5932.6873	2178699.3706	627701.7758		1078.8204
F-5	645+37.5000	10.0000	5932.4404	2178706.2700	627698.7455		1086.3559
F-6	645+45.0000	10.0000	5932.1900	2178713.1802	627695.7398		1093.8915
F-7	645+52.5000	10.0000	5931.9362	2178720.1011	627692.7587		1101.4271
F-8	645+60.0000	10.0000	5931.6788	2178727.0325	627689.8023		1108.9627
F-9	645+67.5000	10.0000	5931.4179	2178733.9744	627686.8705		1116.4983
F-10	645+75.0000	10.0000	5931.1535	2178740.9267	627683.9635		1124.0339
F-11	645+82.5000	10.0000	5930.8856	2178747.8893	627681.0812		1131.5695
F-12	645+90.0000	10.0000	5930.6142	2178754.8621	627678.2238		1139.1051
F-13	645+97.5000	10.0000	5930.3392	2178761.8450	627675.3911		1146.6406
F-14	646+05.0000	10.0000	5930.0608	2178768.8379	627672.5834		1154.1762
F-15	646+12.5000	10.0000	5929.7789	2178775.8408	627669.8005		1161.7118
F-16	646+20.0000	10.0000	5929.4934	2178782.8536	627667.0426		1169.2474
F-17	646+27.5000	10.0000	5929.2044	2178789.8761	627664.3096		1176.7830
F-18	646+35.0000	10.0000	5928.9120	2178796.9084	627661.6017		1184.3186
F-19	646+42.5000	10.0000	5928.6160	2178803.9502	627658.9188		1191.8542
CL ABUT 8	646+50.0000	10.0000	5928.3165	2178811.0015	627656.2610	-224508.8318	1199.3898
BF ABUT 8	646+54.2299	10.0000	5928.1460	2178814.9825	627654.7730	-224520.1725	1203.6398

NOTE: ELEVATIONS ARE AT TOP OF CONCRETE DECK 0.1667 FEET BELOW FINISHED GRADE.

E-470
Engineer 470 Partnership

DIVISION OF HIGHWAYS

BRIDGE DECK ELEVATIONS

RAMP F

Designer	J. Stapleton	Structure Numbers	F-17-JX
Detailer	D. Kurschinski		

Drawing Number B-50 of 52 Drawings

Revision Dates (Preliminary Stage Only)

DESIGNED BY	INITIAL J.S	DATE 3-90	CHECKED BY
CHECKED BY	WDA	3-90	QUANTITIES BY
DETAILED BY	DLK	3-90	CHECKED BY

30-MAR-1990 11:45
/usr/dcco/e470/rampf/sfbde014.90x

UDA2:[200,32]SFBDE0114.90X

STATE OF COLORADO
STATE DEPARTMENT OF HIGHWAYS
DIVISION OF HIGHWAYS:
O.O.H. FORM NO. 126:
REV. FEB. 1984

BRIDGE DECK ELEVATIONS

REVISIONS			
A-1	4-2-90	Revised Geometry	J.L.S.

AS CONSTRUCTED
NO REVISIONS ☐ REVISED ☐ VOID ☐

FED. ROAD REGION	DIVISION	PROJ. NO.	SHEET NO.	SH TOT
VIII	COLORADO	1A06/1B02	206	

62

BENT LINE DESCRIPTION OR FRACTIONAL POINT DESIGNATION	STATION	OFFSET	ELEVATION	COORDINATES FROM LAYOUT LINE EAST	COORDINATES FROM LAYOUT LINE NORTH	BENT LINE LENGTH FROM N-GRID or OFFSET FROM EXTERIOR GIRDER	GIRDER LINE LENGTH
LONGITUDINAL LINE: RT. DECK EDGE							
BF ABUT 1	634+58.4704	11.7500	5932.2103	2177914.3842	628408.7006	-85762.8157	0.0000
CL ABUT 1	634+62.6700	11.7500	5932.3533	2177916.1521	628404.8357	-85764.7616	4.2501
F-1	634+68.4730	11.7500	5932.5490	2177918.6221	628399.5078		10.1227
F-2	634+74.2760	11.7500	5932.7426	2177921.1237	628394.1946		15.9954
F-3	634+80.0790	11.7500	5932.9341	2177923.6568	628388.8963		21.8680
F-4	634+85.8820	11.7500	5933.1235	2177926.2212	628383.6132		27.7407
F-5	634+91.6850	11.7500	5933.3108	2177928.8169	628378.3453		33.6133
F-6	634+97.4880	11.7500	5933.4960	2177931.4437	628373.0929		39.4860
F-7	635+03.2910	11.7500	5933.6789	2177934.1017	628367.8562		45.3586
F-8	635+09.0940	11.7500	5933.8596	2177936.7906	628362.6354		51.2313
F-9	635+14.8970	11.7500	5934.0380	2177939.5105	628357.4305		57.1039
F-10	635+20.7000	11.7500	5934.2141	2177942.2612	628352.2419		62.9766
F-11	635+26.5030	11.7500	5934.3880	2177945.0425	628347.0697		68.8492
F-12	635+32.3060	11.7500	5934.5596	2177947.8545	628341.9140		74.7219
F-13	635+38.1090	11.7500	5934.7290	2177950.6970	628336.7751		80.5945
F-14	635+43.9120	11.7500	5934.8961	2177953.5699	628331.6532		86.4672
F-15	635+49.7150	11.7500	5935.0609	2177956.4731	628326.5484		92.3399
F-16	635+55.5180	11.7500	5935.2235	2177959.4066	628321.4608		98.2125
F-17	635+61.3210	11.7500	5935.3839	2177962.3701	628316.3908		104.0852
F-18	635+67.1240	11.7500	5935.5419	2177965.3638	628311.3384		109.9578
F-19	635+72.9270	11.7500	5935.6977	2177968.3871	628306.3038		115.8305
CL PIER 2	635+78.7300	11.7500	5935.8513	2177971.4403	628301.2873	-91442.9667	121.7031
F-1	635+86.5134	11.7500	5936.0537	2177975.5821	628294.5873		129.5799
F-2	635+94.2968	11.7500	5936.2520	2177979.7770	628287.9205		137.4567
F-3	636+02.0802	11.7500	5936.4465	2177984.0248	628281.2873		145.3336
F-4	636+09.8636	11.7500	5936.6371	2177988.3252	628274.6880		153.2104
F-5	636+17.6469	11.7500	5936.8240	2177992.6780	628268.1231		161.0872
PCC F2/F3	636+18.3587	11.7500	5936.8457	2177993.1913	628267.3564	-93885.9434	162.0099
F-6	636+25.4571	11.7500	5937.0078	2177997.0762	628261.5887		168.9640
F-7	636+33.2709	11.7500	5937.1878	2178001.5096	628255.0780		176.8408
F-8	636+41.0847	11.7500	5937.3640	2178005.9778	628248.5911		184.7176
F-9	636+48.8985	11.7500	5937.5364	2178010.4807	628242.1283		192.5944
F-10	636+56.7122	11.7500	5937.7054	2178015.0183	628235.6898		200.4713
F-11	636+64.5260	11.7500	5937.8708	2178019.5903	628229.2757		208.3481
F-12	636+72.3398	11.7500	5938.0326	2178024.1967	628222.8862		216.2249
F-13	636+80.1536	11.7500	5938.1910	2178028.8373	628216.5216		224.1017
F-14	636+87.9673	11.7500	5938.3458	2178033.5119	628210.1819		231.9785
F-15	636+95.7811	11.7500	5938.4971	2178038.2205	628203.8674		239.8553
F-16	637+03.5949	11.7500	5938.6449	2178042.9630	628197.5782		247.7322
F-17	637+11.4087	11.7500	5938.7892	2178047.7391	628191.3146		255.6090
F-18	637+19.2224	11.7500	5938.9299	2178052.5487	628185.0767		263.4858
F-19	637+27.0362	11.7500	5939.0672	2178057.3917	628178.8647		271.3626
CL PIER 3	637+34.8500	11.7500	5939.2009	2178062.2680	628172.6787	-99610.8408	279.2394
F-1	637+44.4090	11.7500	5939.3596	2178068.2785	628165.1469		288.8755
F-2	637+53.9680	11.7500	5939.5129	2178074.3382	628157.6546		298.5117
F-3	637+63.5270	11.7500	5939.6604	2178080.4470	628150.2023		308.1478
F-4	637+73.0860	11.7500	5939.8023	2178086.6046	628142.7902		317.7839
F-5	637+82.6450	11.7500	5939.9384	2178092.8107	628135.4187		327.4200
F-6	637+92.2040	11.7500	5940.0689	2178099.0651	628128.0882		337.0561
F-7	638+01.7630	11.7500	5940.1936	2178105.3674	628120.7988		346.6923
F-8	638+11.3220	11.7500	5940.3127	2178111.7174	628113.5509		356.3284
F-9	638+20.8810	11.7500	5940.4260	2178118.1149	628106.3449		365.9645
F-10	638+30.4400	11.7500	5940.5337	2178124.5595	628099.1810		375.6006
F-11	638+39.9990	11.7500	5940.6356	2178131.0510	628092.0595		385.2368
F-12	638+49.5580	11.7500	5940.7318	2178137.5891	628084.9809		394.8729
F-13	638+59.1170	11.7500	5940.8224	2178144.1735	628077.9452		404.5090
F-14	638+68.6760	11.7500	5940.9072	2178150.8040	628070.9530		414.1451
F-15	638+78.2350	11.7500	5940.9864	2178157.4802	628064.0044		423.7812
F-16	638+87.7940	11.7500	5941.0598	2178164.2019	628057.0998		433.4174
F-17	638+97.3530	11.7500	5941.1276	2178170.9687	628050.2395		443.0535
F-18	639+06.9120	11.7500	5941.1896	2178177.7805	628043.4237		452.6896
F-19	639+16.4710	11.7500	5941.2459	2178184.6368	628036.6528		462.3257
CL PIER 4	639+26.0300	11.7500	5941.2966	2178191.5374	628029.9270	-112405.0585	471.9618
F-1	639+35.6460	11.7500	5941.3418	2178198.5235	628023.2070		481.5554
F-2	639+45.2620	11.7500	5941.3812	2178205.5539	628016.5332		491.1490
F-3	639+54.8780	11.7500	5941.4148	2178212.6282	628009.9060		501.0426
F-4	639+64.4940	11.7500	5941.4427	2178219.7461	628003.3257		510.7362
F-5	639+74.1100	11.7500	5941.4648	2178226.9072	627996.7924		520.4297
F-6	639+83.7260	11.7500	5941.4812	2178234.1114	627990.3067		530.1233
F-7	639+93.3420	11.7500	5941.4918	2178241.3582	627983.8686		539.8169
F-8	640+02.9580	11.7500	5941.4966	2178248.6474	627977.4785		549.5105
F-9	640+12.5740	11.7500	5941.4956	2178255.9786	627971.1367		559.2041
F-10	640+22.1900	11.7500	5941.4889	2178263.3515	627964.8434		568.8976
F-11	640+31.8060	11.7500	5941.4764	2178270.7658	627958.5989		578.5912
F-12	640+41.4220	11.7500	5941.4581	2178278.2211	627952.4036		588.2848
F-13	640+51.0380	11.7500	5941.4341	2178285.7172	627946.2575		597.9784
F-14	640+60.6540	11.7500	5941.4043	2178293.2538	627940.1612		607.6720
F-15	640+70.2700	11.7500	5941.3687	2178300.8304	627934.1147		617.3655
F-16	640+79.8860	11.7500	5941.3274	2178308.4468	627928.1183		627.0591
F-17	640+89.5020	11.7500	5941.2803	2178316.1026	627922.1724		636.7527
F-18	640+99.1180	11.7500	5941.2274	2178323.7974	627916.2772		646.4463
F-19	641+08.7340	11.7500	5941.1688	2178331.5311	627910.4329		656.1399
CL PIER 5	641+18.3500	11.7500	5941.1043	2178339.3031	627904.6397	-131668.2285	665.8335
F-1	641+27.8942	11.7500	5941.0341	2178347.0548	627898.9407		675.4541
F-2	641+37.4384	11.7500	5940.9572	2178354.8437	627893.2927		685.0759
F-3	641+46.9826	11.7500	5940.8735	2178362.6694	627887.6958		694.6971
F-4	641+56.5268	11.7500	5940.7833	2178370.5316	627882.1503		704.3183
F-5	641+66.0710	11.7500	5940.6863	2178378.4300	627876.6564		713.9395
F-6	641+75.6152	11.7500	5940.5826	2178386.3643	627871.2144		723.5607
F-7	641+85.1594	11.7500	5940.4723	2178394.3340	627865.8245		733.1819
F-8	641+94.7036	11.7500	5940.3553	2178402.3388	627860.4870		742.8031
F-9	642+04.2478	11.7500	5940.2315	2178410.3785	627855.2020		752.4243
F-10	642+13.7920	11.7500	5940.1012	2178418.4527	627849.9699		762.0455
F-11	642+23.3362	11.7500	5939.9643	2178426.5609	627844.7908		771.6667
F-12	642+32.8804	11.7500	5939.8217	2178434.7029	627839.6649		781.2879
PCC F3/F4	642+42.2752	11.7500	5939.6757	2178442.7501	627834.6714	-149553.2179	790.7585
F-13	642+42.4250	11.7500	5939.6734	2178442.8785	627834.5924		790.9091
F-14	642+51.5929	11.7500	5939.5190	2178451.0816	627829.5652		800.5303
F-15	642+61.5607	11.7500	5939.3589	2178459.3076	627824.5752		810.1515
F-16	642+71.1286	11.7500	5939.1932	2178467.5562	627819.6226		819.7727
F-17	642+80.6964	11.7500	5939.0226	2178475.8272	627814.7076		829.3939
F-18	642+90.2643	11.7500	5938.8473	2178484.1205	627809.8301		839.0151
F-19	642+99.8321	11.7500	5938.6673	2178492.4358	627804.9903		848.6363
CL PIER 6	643+09.4000	11.7500	5938.4826	2178500.7729	627800.1884	-157906.4283	858.2575
F-1	643+18.9300	11.7500	5938.2939	2178509.0987	627795.4431		867.8407
F-2	643+28.4600	11.7500	5938.1006	2178517.4459	627790.7355		877.4238
F-3	643+37.9900	11.7500	5937.9026	2178525.8142	627786.0657		887.0069
F-4	643+47.5200	11.7500	5937.6999	2178534.2036	627781.4338		896.5901
F-5	643+57.0500	11.7500	5937.4925	2178542.6138	627776.8398		906.1732
F-6	643+66.5800	11.7500	5937.2805	2178551.0447	627772.2840		915.7563
F-7	643+76.1100	11.7500	5937.0634	2178559.4962	627767.7663		925.3395
F-8	643+85.6400	11.7500	5936.8406	2178567.9680	627763.2869		934.9226
F-9	643+95.1700	11.7500	5936.6122	2178576.4599	627758.8458		944.5057
F-10	644+04.7000	11.7500	5936.3781	2178584.9719	627754.4432		954.0889
F-11	644+14.2300	11.7500	5936.1383	2178593.5036	627750.0791		963.6720
F-12	644+23.7600	11.7500	5935.8929	2178602.0551	627745.7537		973.2551
F-13	644+33.2900	11.7500	5935.6417	2178610.6259	627741.4669		982.8383
F-14	644+42.8200	11.7500	5935.3850	2178619.2161	627737.2190		992.4214
F-15	644+52.3500	11.7500	5935.1225	2178627.8254	627733.0099		1002.0045
F-16	644+61.8800	11.7500	5934.8544	2178636.4537	627728.8399		1011.5877
F-17	644+71.4100	11.7500	5934.5807	2178645.1007	627724.7088		1021.1708
F-18	644+80.9400	11.7500	5934.3012	2178653.7663	627720.6170		1030.7539
F-19	644+90.4700	11.7500	5934.0161	2178662.4504	627716.5643		1040.3371
CL PIER 7	645+00.0000	11.7500	5933.7253	2178671.1526	627712.5510	-188778.5035	1049.9202
F-1	645+07.5000	11.7500	5933.4925	2178678.0139	627709.4202		1057.4620
F-2	645+15.0000	11.7500	5933.2562	2178684.8863	627706.3139		1065.0038
F-3	645+22.5000	11.7500	5933.0164	2178691.7697	627703.2321		1072.5457
F-4	645+30.0000	11.7500	5932.7730	2178698.6640	627700.1747		1080.0875
F-5	645+37.5000	11.7500	5932.5262	2178705.5692	627697.1420		1087.6293
F-6	645+45.0000	11.7500	5932.2758	2178712.4851	627694.1338		1095.1711
F-7	645+52.5000	11.7500	5932.0219	2178719.4117	627691.1503		1102.7129
F-8	645+60.0000	11.7500	5931.7645	2178726.3488	627688.1914		1110.2547
F-9	645+67.5000	11.7500	5931.5037	2178733.2964	627685.2572		1117.7965
F-10	645+75.0000	11.7500	5931.2393	2178740.2545	627682.3478		1125.3384
F-11	645+82.5000	11.7500	5930.9713	2178747.2228	627679.4631		1132.8802
F-12	645+90.0000	11.7500	5930.6998	2178754.2013	627676.6033		1140.4220
F-13	645+97.5000	11.7500	5930.4250	2178761.1900	627673.7683		1147.9638
F-14	646+05.0000	11.7500	5930.1466	2178768.1888	627670.9582		1155.5056
F-15	646+12.5000	11.7500	5929.8646	2178775.1975	627668.1731		1163.0474
F-16	646+20.0000	11.7500	5929.5792	2178782.2160	627665.4129		1170.5893
F-17	646+27.5000	11.7500	5929.2902	2178789.2444	627662.6776		1178.1311
F-18	646+35.0000	11.7500	5928.9977	2178796.2824	627659.9675		1185.6729
F-19	646+42.5000	11.7500	5928.7017	2178803.3300	627657.2823		1193.2147
CL ABUT 8	646+50.0000	11.7500	5928.4022	2178810.3872	627654.6223	-224507.0818	1200.7565
BF ABUT 8	646+54.2264	11.7500	5928.2319	2178814.3682	627653.1344	-224518.4225	1205.0065

	INITIAL	DATE
DESIGNED BY	J.L.S	3-90
CHECKED BY	W.D.A	3-90
DETAILED BY	D.L.K	3-90
CHECKED BY		
QUANTITIES BY		
CHECKED BY		

NOTE: ELEVATIONS ARE AT TOP OF CONCRETE DECK 0.1667 FEET BELOW FINISHED GRADE.

E-470
Engineer 470 Partnership

DIVISION OF HIGHWAYS

BRIDGE DECK ELEVATIONS
RAMP F

Designer	J. Stapleton	Structure Numbers	F-17-JX
Detailer	D. Kurschinski		
Drawing Number	B-51 of 52 Drawings		

Revision Dates (Preliminary Stage Only)

30-MAR-1990 14:51
/usr/dacs/e470/ramp1/afbde034.90x

100-4

UDA2:[200,321SFBDE0114.90X

0.0000

5926.59
926.99
5927.39
927.79

5928.19
28.59
28.99
29.38

5929.77
30.15
30.53
30.90

5931.26
31.61
31.96
32.31

0.0000

5928.48
28.08
27.67
27.25

5926.83
26.40
25.96
25.52

5925.07
24.62
24.15
23.69

5923.21
22.73
22.25
21.76

TYPE RAMP-F.MEM

STATION	OFFSETS				
	-28.0000	-24.0000	-12.0000	0.0000	10.0000
633+10	5923.97	5924.24	5925.07	5925.90	5926.59
+20	24.37	24.64	25.47	26.30	5926.99
+30	24.77	25.04	25.87	26.70	5927.39
+40	25.17	25.44	26.27	27.10	5927.79
633+50	5925.57	5925.84	5926.67	5927.50	5928.19
+60	25.97	26.24	27.07	27.90	28.59
+70	26.37	26.64	27.47	28.30	28.99
+80	26.76	27.04	27.87	28.69	29.38
633+90	5927.15	5927.42	5928.25	5929.08	5929.77
634+00	27.53	27.81	28.63	29.46	30.15
+10	27.90	28.18	29.09	29.84	30.53
+20	28.27	28.55	29.38	30.21	30.90
634+30	5928.64	5928.91	5929.74	5930.57	5931.26
+40	28.99	29.27	30.10	30.92	31.61
+50	29.34	29.62	30.45	31.27	31.96
+60	29.69	29.96	30.79	31.62	32.31

STATION	OFFSETS				
	-28.0000	-24.0000	-12.0000	0.0000	10.0000
646+50	5926.62	5926.82	5927.41	5927.99	5928.48
+60	26.22	26.41	27.00	27.59	28.08
+70	25.81	26.00	26.59	27.18	27.67
+80	25.39	25.58	26.17	26.76	27.25
646+90	5924.96	5925.16	5925.75	5926.34	5926.83
+00	24.53	24.73	25.32	25.91	26.40
+10	24.10	24.29	24.88	25.47	25.96
+20	23.66	23.85	24.44	25.03	25.52
647+30	5923.21	5923.40	5923.99	5924.58	5925.07
+40	22.75	22.95	23.54	24.13	24.62
+50	22.29	22.49	23.08	23.66	24.15
+60	21.83	22.02	22.61	23.20	23.69
647+70	5921.35	5921.55	5922.14	5922.72	5923.21
+80	20.87	21.07	21.66	22.24	22.73
+90	20.39	20.58	21.17	21.76	22.25
648+00	19.89	20.09	20.68	21.27	21.76

Checked By: KMA
1-14-91

TYPE RAMP-F.NEW

STATION	OFFSETS				
	-28.0000	-24.0000	-12.0000	0.0000	10.0000
633+10	5923.97	5924.24	5925.07	5925.90	5926.59
+20	24.37	24.64	25.47	26.30	5926.99
+30	24.77	25.04	25.87	26.70	5927.39
+40	25.17	25.44	26.27	27.10	5927.79
633+50	5925.57	5925.84	5926.67	5927.50	5928.19
+60	25.97	26.24	27.07	27.90	28.59
+70	26.37	26.64	27.47	28.30	28.99
+80	26.76	27.04	27.87	29.69	29.38
633+90	5927.15	5927.42	5928.25	5929.08	5929.77
634+00	27.53	27.81	28.63	29.46	30.15
+10	27.90	28.18	29.09	29.84	30.53
+20	28.27	28.55	29.38	30.21	30.90
634+30	5928.64	5928.91	5929.74	5930.57	5931.26
+40	28.99	29.27	30.10	30.92	31.61
+50	29.34	29.62	30.45	31.27	31.96
+60	29.69	29.96	30.79	31.62	32.31

STATION	OFFSETS				
	-28.0000	-24.0000	-12.0000	0.0000	10.0000
646+50	5926.62	5926.82	5927.41	5927.99	5928.48
+60	26.22	26.41	27.00	27.59	28.08
+70	25.81	26.00	26.59	27.18	27.67
+80	25.39	25.58	26.17	26.76	27.25
646+90	5924.96	5925.16	5925.75	5926.34	5926.83
+00	24.53	24.73	25.32	25.91	26.40
+10	24.10	24.29	24.88	25.47	25.96
+20	23.66	23.85	24.44	25.03	25.52
647+30	5923.21	5923.40	5923.99	5924.58	5925.07
+40	22.75	22.95	23.54	24.13	24.62
+50	22.29	22.49	23.08	23.66	24.15
+60	21.83	22.02	22.61	23.20	23.69
647+70	5921.35	5921.55	5922.14	5922.72	5923.21
+80	20.87	21.07	21.66	22.24	22.73
+90	20.39	20.58	21.17	21.76	22.25
648+00	19.89	20.09	20.68	21.27	21.76

A:\

ATE OF COLORADO
ATE DEPARTMENT OF HIGHWAYS
VISION OF HIGHWAYS
D. H. FORM NO. 126
V. FEB. 1984

AS CONSTRUCTED				
NO REVISIONS ☐	REVISED ☐	VOID ☐		
FED. ROAD REGION	DIVISION	PROJ. NO.	SHEET NO.	SHEET TOTALS
VIII	COLORADO	IA06/IBad	247	

REVISIONS		

ROADWAY APPROACHES

ELEVATIONS ARE AT FINISHED GRADE

STATION	OFFSETS				
	-28.0000	-24.0000	-12.0000	0.0000	10.0000
633+10.0	5923.80	5924.08	5924.91	5925.73	5926.42
+20.0	24.20	24.48	25.31	26.13	26.82
+30.0	24.60	24.88	25.71	26.53	27.22
+40.0	25.00	25.28	26.11	26.93	27.62
633+50.0	5925.40	5925.68	5926.51	5927.33	5928.02
+60.0	25.80	26.08	26.91	27.73	28.42
+70.0	26.20	26.48	27.30	28.13	28.82
+80.0	26.59	26.87	27.70	28.53	29.22
633+90.0	5926.98	5927.26	5928.09	5928.91	5929.60
634+00.0	27.36	27.64	28.47	29.30	29.99
+10.0	27.74	28.01	28.84	29.67	30.36
+20.0	28.11	28.38	29.21	30.04	30.73
634+30.0	5928.47	5928.75	5929.57	5930.40	5931.09
+40.0	28.83	29.10	29.93	30.76	31.45
+50.0	29.18	29.45	30.28	31.11	31.80
+60.0	29.52	29.80	30.62	31.45	32.14

STATION	OFFSETS				
	-28.0000	-24.0000	-12.0000	0.0000	10.0000
646+50.0	5926.45	5926.65	5927.24	5927.83	5928.32
+60.0	26.05	26.25	26.83	27.42	27.91
+70.0	25.64	25.83	26.42	27.01	27.50
+80.0	25.22	25.42	26.01	26.59	27.08
646+90.0	5924.80	5924.99	5925.58	5926.17	5926.66
647+00.0	24.37	24.56	25.15	25.74	26.23
+10.0	23.93	24.13	24.72	25.30	25.79
+20.0	23.49	23.69	24.27	24.86	25.35
647+30.0	5923.04	5923.24	5923.83	5924.41	5924.90
+40.0	22.59	22.78	23.37	23.96	24.45
+50.0	22.13	22.32	22.91	23.50	23.99
+60.0	21.66	21.85	22.44	23.03	23.52
647+70.0	5921.19	5921.38	5921.97	5922.56	5923.05
+80.0	20.71	20.90	21.49	22.08	22.57
+90.0	20.22	20.42	21.00	21.59	22.08
648+00.0	19.73	19.92	20.51	21.10	21.59

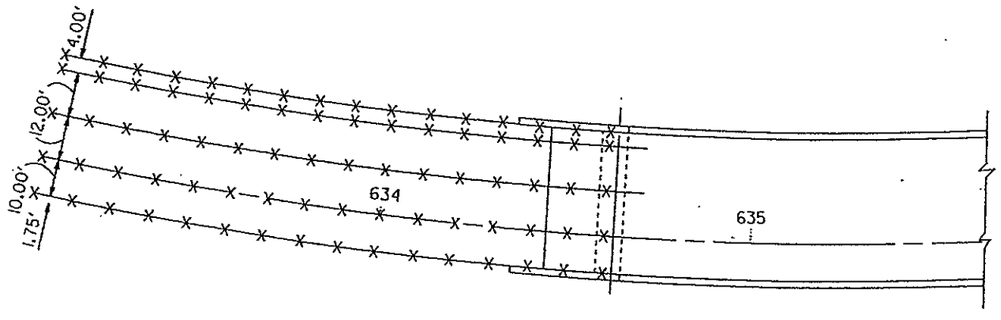

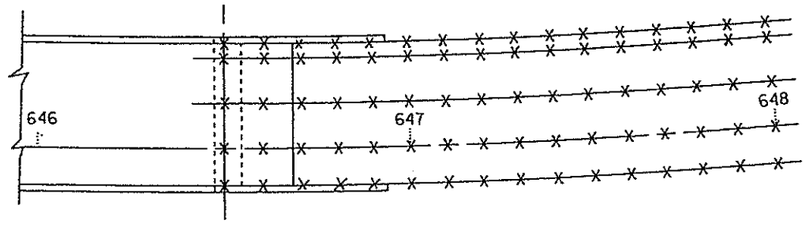

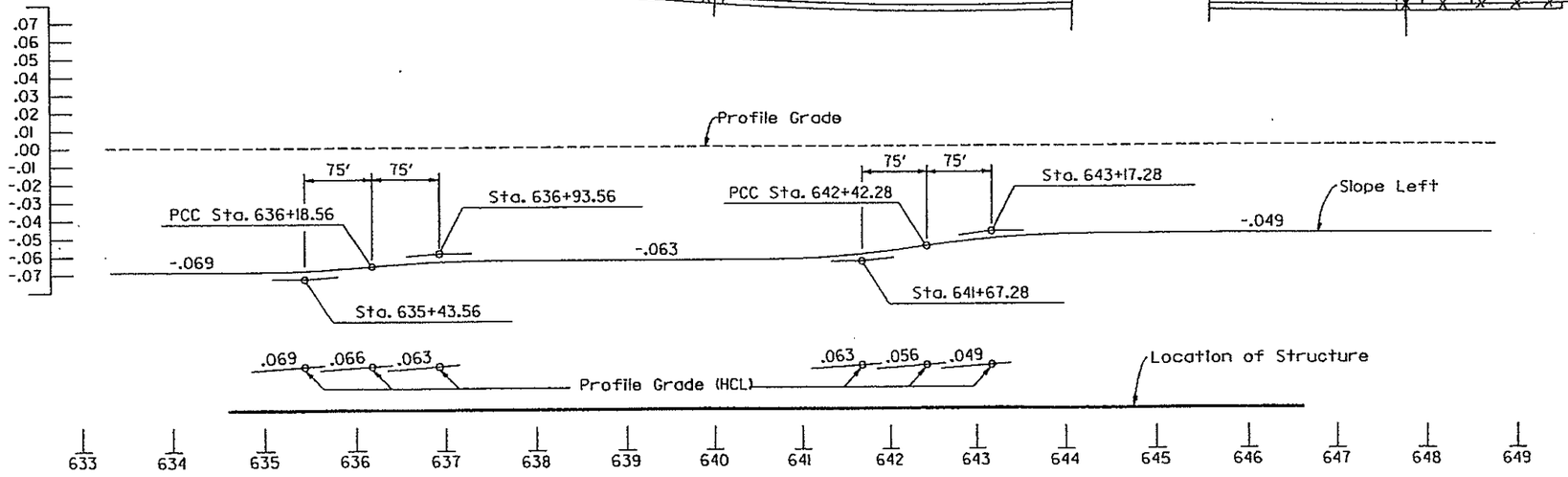

SUPERELEVATION TRANSITION DIAGRAM

NOTE:

For obtaining smooth profiles on pavement or deck edges vertical curves of one Station (100') have been inserted between the angular breaks at the beginning and the end of superelevation transition.

	INITIAL	DATE
DESIGNED BY	J.L.S	2-90
CHECKED BY		
DETAILED BY	D.L.K	2-90
CHECKED BY	L.R.C	3-90
QUANTITIES BY	L.V.	3-90
CHECKED BY		

DIVISION OF HIGHWAYS

ROADWAY APPROACHES

RAMP F

Designer J. Stapleton	Structure Numbers	F-17-JX
Detailer D. Kurschinski		
Drawing Number B-52 of 52 Drawings		

E-470

Engineer 470 Partnership

Revision Dates (Preliminary Stage Only)

06-FEB-1990 22:21
/usr/acad/e470/ramp/stops

UDA2:(200,32)SFAPS0114.90W

F COLORADO
EPARTMENT OF HIGHWAYS
ON OF HIGHWAYS
ISED NO. 1 (2/84)
3, 1984

GENERAL NOTES:

ALL WORK SHALL BE DONE ACCORDING TO THE STANDARD SPECIFICATIONS OF THE DIVISION OF HIGHWAYS, STATE OF COLORADO, APPLICABLE TO THE PROJECT.

STATIONS, ELEVATIONS AND DIMENSIONS CONTAINED IN THESE PLANS ARE CALCULATED FROM THE "AS CONSTRUCTED PLANS" AND SURVEY DATA. THESE STATIONS, ELEVATIONS AND DIMENSIONS MAY BE ADJUSTED TO MEET THE EXISTING STRUCTURE. THE CONTRACTOR SHALL VERIFY ALL DEPENDENT DIMENSIONS IN THE FIELD BEFORE ORDERING OR FABRICATING ANY MATERIAL.

CLASS I FINISH, FOLLOWED BY APPLICATION OF A COLORED ACRYLIC COATING, WILL BE REQUIRED ON ALL EXPOSED CONCRETE SURFACES DOWN TO 1'-0" BELOW GROUND LINE. REQUIREMENTS FOR COATING ARE GIVEN IN REVISION OF SECTION 601, STRUCTURAL CONCRETE (COATING).

EXPANSION JOINT MATERIAL SHALL MEET AASHTO SPECIFICATION M-213.

STRUCTURE EXCAVATION AND BACKFILL SHALL BE IN ACCORDANCE WITH STANDARD M-206-1 AND M-206-2. ADEQUATE SHORING OF THE EXCAVATION ADJACENT TO THE ROADWAYS SHALL BE PROVIDED DURING ALL PHASES OF CONSTRUCTION. METHOD OF SHORING SHALL BE APPROVED BY THE ENGINEER. PAYMENT FOR SHORING TO BE INCLUDED IN ITEM 206, STRUCTURE EXCAVATION.

ALL STRUCTURAL STEEL SHALL BE AASHTO M-183 (ASTM A-36).

ALL STRUCTURAL STEEL NOT OTHERWISE NOTED SHALL BE PAINTED IN ACCORDANCE WITH SECTION 509 OF THE STANDARD SPECIFICATIONS. THE COLOR SHALL MATCH THE COLOR OF THE ADJACENT CONCRETE COATING.

GRADE 60 REINFORCING STEEL IS REQUIRED FOR #4 BARS AND LARGER. ALL REINFORCING STEEL SHALL BE EPOXY COATED UNLESS OTHERWISE NOTED.

THE FOLLOWING TABLE GIVES THE MINIMUM CLASS B LAP SPLICE FOR EPOXY COATED REINFORCING BARS :

BAR SIZE	#4	#5	#6	#7	#8	#9	#10	#11
SPLICE LENGTH FOR CLASS B CONCRETE	1'-3"	1'-6"	2'-0"	2'-6"	3'-6"	4'-5"	5'-7"	6'-10"
SPLICE LENGTH FOR CLASS D CONCRETE	1'-3"	1'-6"	1'-10"	2'-2"	2'-10"	3'-7"	4'-7"	5'-7"

THE LENGTHS SHALL BE INCREASED BY 20 PERCENT FOR 3-BAR BUNDLES AND 33 PERCENT FOR 4-BAR BUNDLES.

ANY REINFORCING STEEL SPLICES NOT SHOWN SHALL BE APPROVED BY THE ENGINEER.

THE CONTRACTOR SHALL BE RESPONSIBLE FOR THE STABILITY OF THE STRUCTURE DURING CONSTRUCTION.

THE INFORMATION SHOWN ON THESE DRAWINGS CONCERNING TYPE AND LOCATION OF UNDERGROUND UTILITIES IS NOT GUARANTEED TO BE ACCURATE OR ALL INCLUSIVE. THE CONTRACTOR IS RESPONSIBLE FOR MAKING HIS OWN DETERMINATION AS TO THE TYPE AND LOCATION OF UNDERGROUND UTILITIES AS MAY BE NECESSARY TO AVOID DAMAGE THERETO.

ANGLES ARE MEASURED AT LOCAL TANGENT TO SECTION.

ABBREVIATIONS :

E.W. = EACH WAY
E.F. = EACH FACE
F.F. = FAR FACE
N.F. = NEAR FACE
J = JUNCTION BOX
H.C.L. = HORIZONTAL CONTROL LINE
H.B.P. = HOT BITUMINOUS PAVEMENT
CONT. = CONTINOUS
(B) = BLACK REINFORCING BAR (EPOXY COATED REINFORCING BAR MAY BE PROVIDED AT NO ADDITIONAL COST TO THE PROJECT).

ALL EXTERIOR CONCRETE CORNERS SHALL BE CONSTRUCTED WITH ¾" CHAMFERS, UNLESS OTHERWISE NOTED.

PERMANENT STEEL BRIDGE DECK FORMS SHALL NOT BE USED

WINGWALLS & RETAINING WALLS SHALL BE REMOVED TO A MINIMUM OF 3 FEET BELOW GRADE.

DESIGN DATA

CURRENT AASHTO SPECIFICATIONS :

LIVE LOAD : HS-20-44 AND INTERSTATE ALTERNATE
DEAD LOAD : ASSUMES 48 LBS PER SQ. FT. FOR BITUMINOUS PAVEMENT

REINFORCED CONCRETE :
CLASS B CONCRETE : f'c = 3,000 psi AT 28 DAYS ; fc = 1,200 psi, n = 9
CLASS D CONCRETE : f'c = 4,500 psi AT 28 DAYS ; fc = 1,800 psi, n = 8

REINFORCING STEEL : #5 BARS AND LARGER : Fy = 60,000 psi, fs = 24,000 psi

STRUCTURAL STEEL : AASHTO M-183 (ASTM A-36) Fy = 36,000 psi, fs = 20,000 psi

PRESTRESSED CONCRETE : f'c = 270,000 psi, f'c = (SEE DETAILS)

DESIGN METHODS :
ABUTMENT CAPS, I-GIRDERS & SLAB : SERVICE LOAD DESIGN
PIER WALL : LOAD FACTOR DESIGN

AS CONSTRUCTED

NO REVISIONS ☐ REVISED ☐ VOID ☐

FED. ROAD DESIGN.	DIVISION	PROJ. NO.	SHEET NO.	SHEET TOTAL
VIII	COLORADO	1402	51	

REVISIONS			

SUMMARY OF QUANTITIES

	ITEM	DESCRIPTION	UNIT	Structure No. F-17-HL SUPER-STRUCTURE	F-17-HL ABUT. #1	F-17-HL PIER #2	F-17-HL ABUT. #3	F-17-HL TOTAL	Structure No. F-17-HM SUPER-STRUCTURE	F-17-HM ABUT. #1	F-17-HM PIER #2	F-17-HM ABUT. #3	F-17-HM TOTAL	TOTALS
	202	Removal of Portions of Present Structure	L.S.					1					1	2
①	206	Structure Excavation	Cu.Yd.		207	238	227	672		217	567	238	1022	1694
	206	Structure Backfill (Class B)	Cu.Yd.		170		186	356		168		179	347	703
	206	Structure Backfill (Class 2)	Cu.Yd.			179		179			425		425	604
	403	Hot Bituminous Pavement (Gr E) (Haul and Asphalt)	Ton	32				32	63				63	95
	502	Steel Piling (HP 12x74)	Lin.Ft.		207		232	439		253		285	538	977
	507	Concrete Slope and Ditch Paving (Reinforced)	Cu.Yd.		20		23	43		24		31	55	98
	515	Waterproofing (Membrane)	Sq.Yd.	249	21		21	291	493	40		45	578	869
	518	Bridge Compression Joint Sealer	Lin.Ft.		8		8	16		8		8	16	32
	601	Concrete Class B (Bridge)	Cu.Yd.		38	54	41	133		48	110	57	215	348
	601	Concrete Class L (Bridge)	Cu.Yd.			38		38			103		103	141
②	601	Concrete Class D (Bridge)	Cu.Yd.	76	19		20	115	148	32		35	215	330
	602	Reinforcing Steel	LB			2040		2040			5332		5332	7372
③	602	Reinforcing Steel (Epoxy Coated)	LB	22552	8409	5608	8369	44938	42952	14652	10189	13449	78242	123180
	606	Bridge Rail Type 4 (4701)	Lin.Ft.	157	27		32	216	163	26		30	219	435
	613	2 Inch Electrical Conduit	Lin.Ft.	219				219						219
	613	¾ Inch Electrical Conduit	Lin.Ft.	8				8						8
	618	Prestressed Concrete Unit (I-Section) (75 to 80 feet)	Ea.	2				2	3				3	5
	618	Prestressed Concrete Unit (I-Section) (85 to 90 feet)	Ea.	2				2	3				3	5

① 97 Cu. Yds. for Concrete Slope and Ditch Paving (Reinforced).

② ½" Expansion Joint Material to be included in the Bid Price; 65.8 Cu. Yds. in Approach Slabs.

③ 8439 Lbs in Approach Slabs.

INDEX OF DRAWINGS

DWG. No.	DESCRIPTION
81	General Information and Summary of Quantities
82	General Layout
83	Engineering Geology
84	Construction Layout (F-17-HL)
85	Construction Layout (F-17-HM)
86	Piling Layout
87	Abutment #1 and #3 (F-17-HL)
88	Abutment #1 and #3 (F-17-HM)
89	Abutment and Wing Wall Details
810	Pier #2 Elevation (F-17-HL)
811	Pier #2 Plan (F-17-HL)
812	Pier #2 Elevation (F-17-HM)
813	Pier #2 Plan (F-17-HM)
814	Superstructure Details (F-17-HL)
815	Superstructure Details (F-17-HM)
816	Colorado G54 Girder
817	Retaining Nots & Rail Type 4 (4701) Details
818	Slope Paving Details
819	Approach Slab Details
820	Bridge Deck Elevations
821	Bridge Deck Elevations
822	Roadway Approaches

BRIDGE DESCRIPTION

Twin 2-Span Bridge Widening (76'-4⅛", 84'-4½" F-17-HL), (76'-1", 85'-5⅛" F-17-HM).
Concrete Prestressed Girder continuous over Yosemite Street.
50'-0" Roadway Barrier to Barrier (Str. F-17-HL)
Roadway Barrier to Barrier Varies from 64'-7⅛" to 67'-8⅛" (Str. F-17-HM)
77°57'52" Skew from HCL (F-17-HL)
77°57'42" Skew from HCL (F-17-HM)
1'-9" Bridge Rails Type 4 (4701)

Near Denver-Sect. 4-T. 6S.-R. 67W.

Cross Reference Drawing Number
Section or Detail Identification

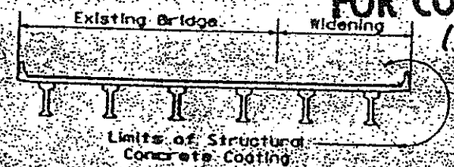

SUPERSTRUCTURE CONCRETE COATING FINISH DIAGRAM

FOR CONSTRUCTION
10-16-89

E-470
Engineer 470 Partnership

DIVISION OF HIGHWAYS
S.H. 470 OVER YOSEMITE STREET BRIDGE WIDENING
GENERAL INFORMATION AND SUMMARY OF QUANTITIES

Designer:	E.R. Creager	Structure Number:	F-17-HL
Detailer:	M.E. Davison	Structure Number:	F-17-HM
Drawing Number:	81 of 22 Drawings		

J0426093.2011050150.90A

CURVE DATA S.H. 470 HORIZONTAL CONTROL LINE

Pc = 3274.04'
Lc = 2546.44'
Tc = 1341.54'
Dc = 1° 45'00"

Δc = 44°33' 46" Lt
ec = 0.0568'/Ft (F-17-HL)
ec = 0.0585'/Ft (F-17-HM)
θs = 2°37'30"

Ls = 300'
L.T. = 200.02'
S.T. = 100.02'
PI = 1390+77.36

DESIGN SPEED = 70 MPH (F-17-HL)
DESIGN SPEED = 65 MPH (F-17-HM)

AS CONSTRUCTED
NO REVISIONS ☐ REVISED ☐ VOID ☐

FED. ROAD REGION	DIVISION	PROJ. NO.	SHEET NO.	SHEET TOTAL
VIII	COLORADO	1402	52	

REVISIONS

5.58' Sta. Depth

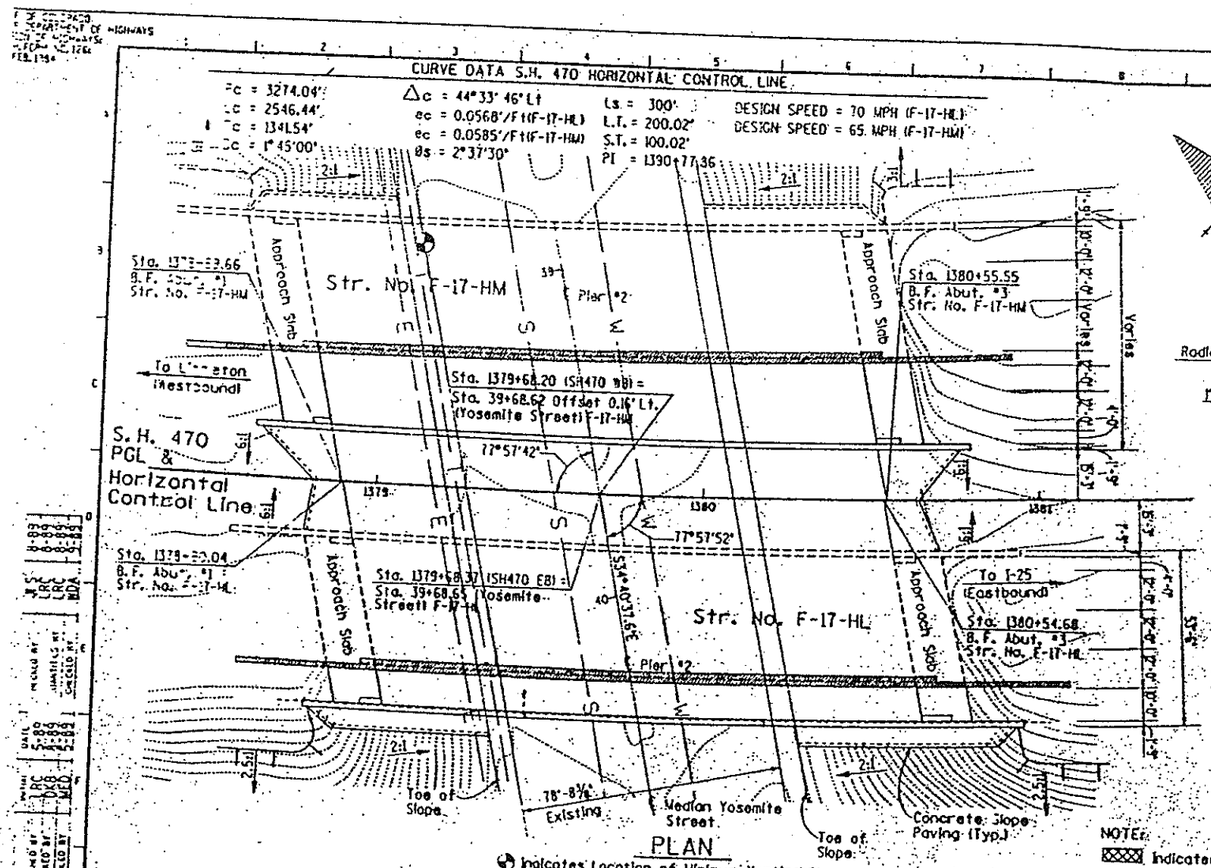

PLAN

● Indicates Location of Minimum Vertical Clearance.

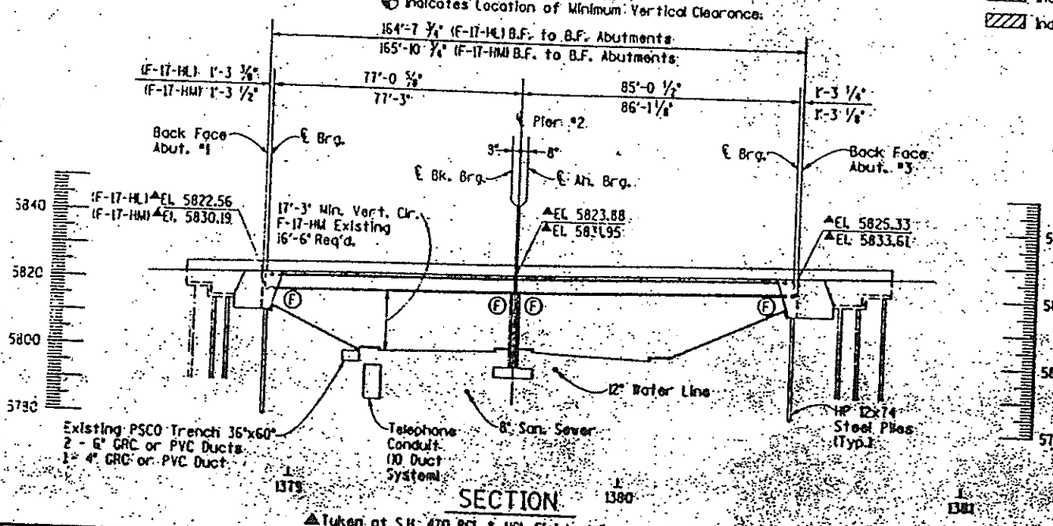

SECTION

▲ Taken at S.H. 470 PGL & HCL Finished Roadway Elevations

S.H. 470 PGL & Horizontal Control Line

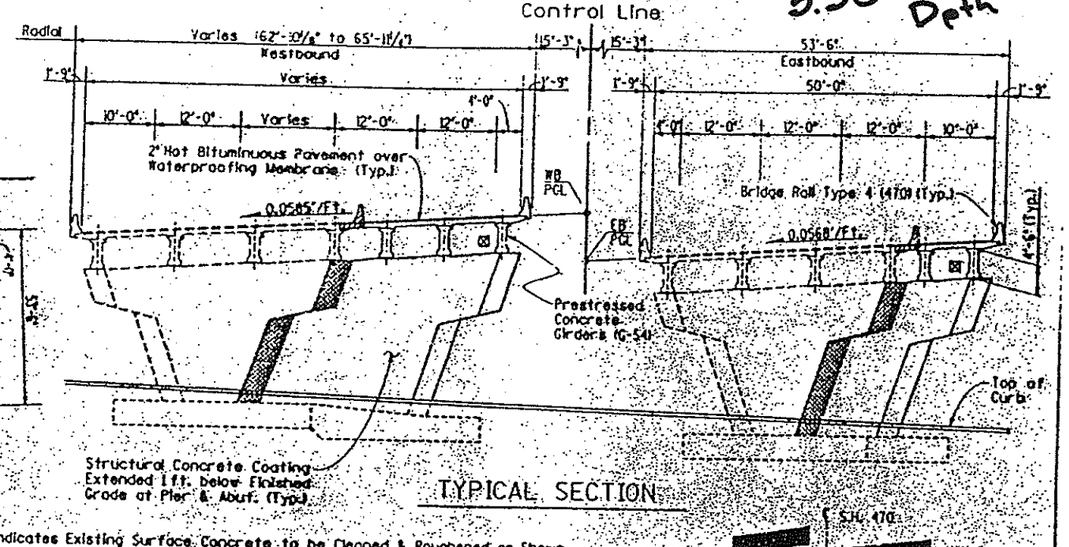

TYPICAL SECTION

NOTES:
▩ Indicates Existing Surface Concrete to be Cleaned & Roughened as Shown.
▨ Indicates Existing Structure to be Removed.

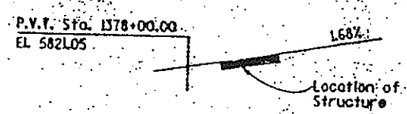

PROFILE GRADE STR. F-17-HL

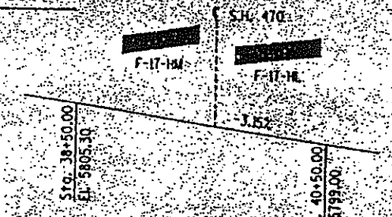

PROFILE GRADE YOSEMITE STREET

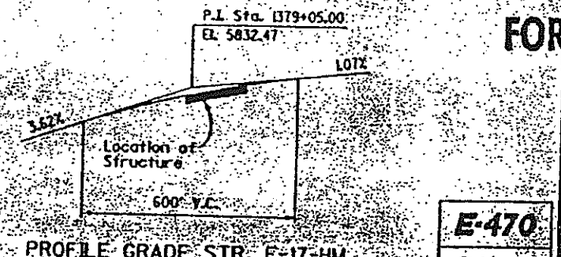

PROFILE GRADE STR. F-17-HM

10-16-85
FOR CONSTRUCTION

DIVISION OF HIGHWAYS
S. H. 470 OVER YOSEMITE STREET
BRIDGE WIDENING

GENERAL LAYOUT

E-470
Engineer #10 Partnership

Designed: L.R.Creager	Structure Number: F-17-HL
Detailed: M.E.Davison	Number: F-17-HM
Drawing Number: 52 of 72 Drawings	

Revision Dates | Preliminary Plans Only

LDA2K200.2071OSQL.906

AS CONSTRUCTED					
NO REVISIONS ☐ REVISED ☐ VOID ☐	FED. ROAD REGION	DIVISION	PROJ. NO.	SHEET NO.	SHEET TOTALS
	VIII	COLORADO	1A02	54	

REVISIONS			
A-1	10-5-89	Intermediate Diaphragm	LRC

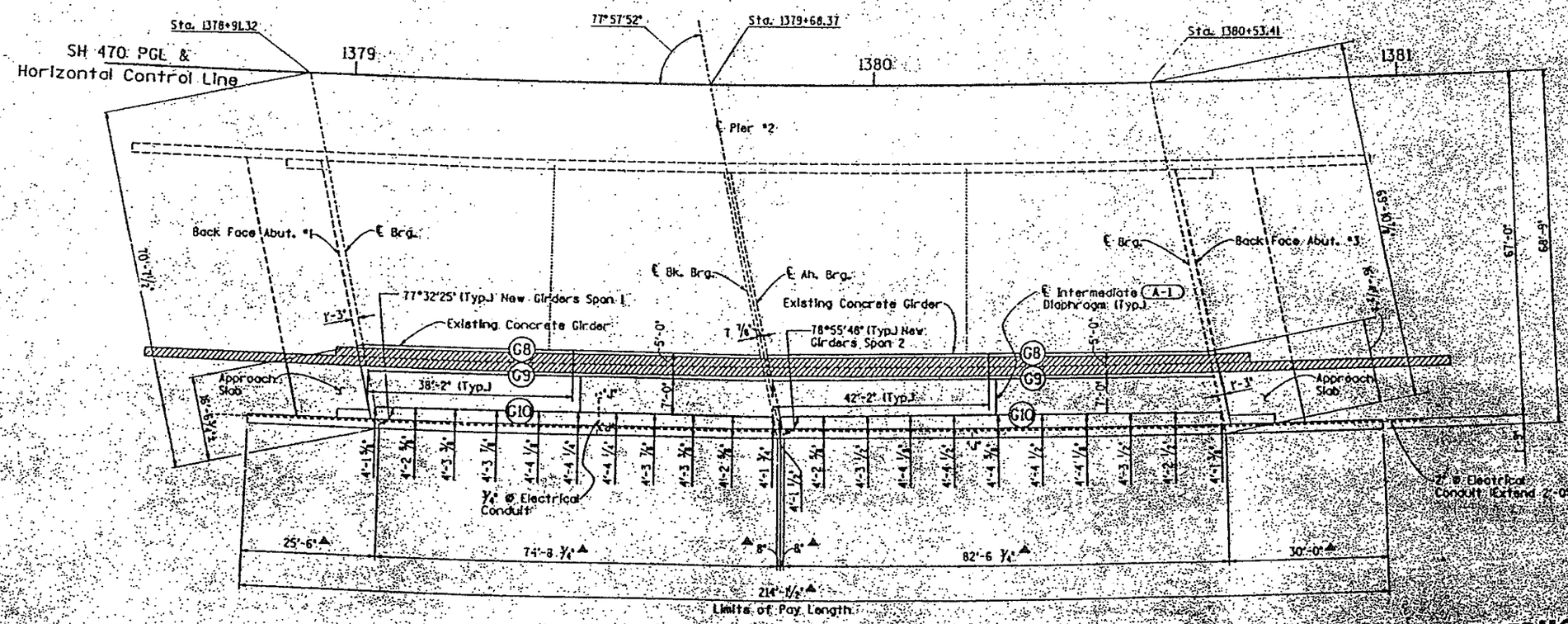

CONSTRUCTION LAYOUT

STR. NO. F-17-HL

NOTES:

▲ Arc Length Dimensions along Outside Edge of Bridge Rail.

All Edge Offsets are at 10th points Perpendicular to the Girders.

▨ Existing Structure to be Removed.

FOR CONSTRUCTION
10-16-89

DIVISION OF HIGHWAYS
S.H. 470 OVER YOSEMITE STREET
BRIDGE WIDENING
CONSTRUCTION LAYOUT
(F-17-HL)

E-470
Engineer 470 Partnership

Designer	L.R. Creager	Structure Number	F-17-HL
Detailer	M.E. Davison	Structure Number	F-17-HL
Drawing Number	84 of 22 Drawings		

UDA2:(200,20)YOSHI.CL.90F

STATE OF COLORADO
DEPARTMENT OF HIGHWAYS
DIVISION OF HIGHWAYS
FORM NO. 1256
FEB. 1984

AS CONSTRUCTED

NO REVISIONS ☐ REVISED ☐ VOID ☐

FED. ROAD REGION	DIVISION	PROJ. NO.	SHEET NO.	SHEET TOTALS
VIII	COLORADO	1402	55	

REVISIONS			
A-1	10-5-89	Intermediate Diaphragm	LRC

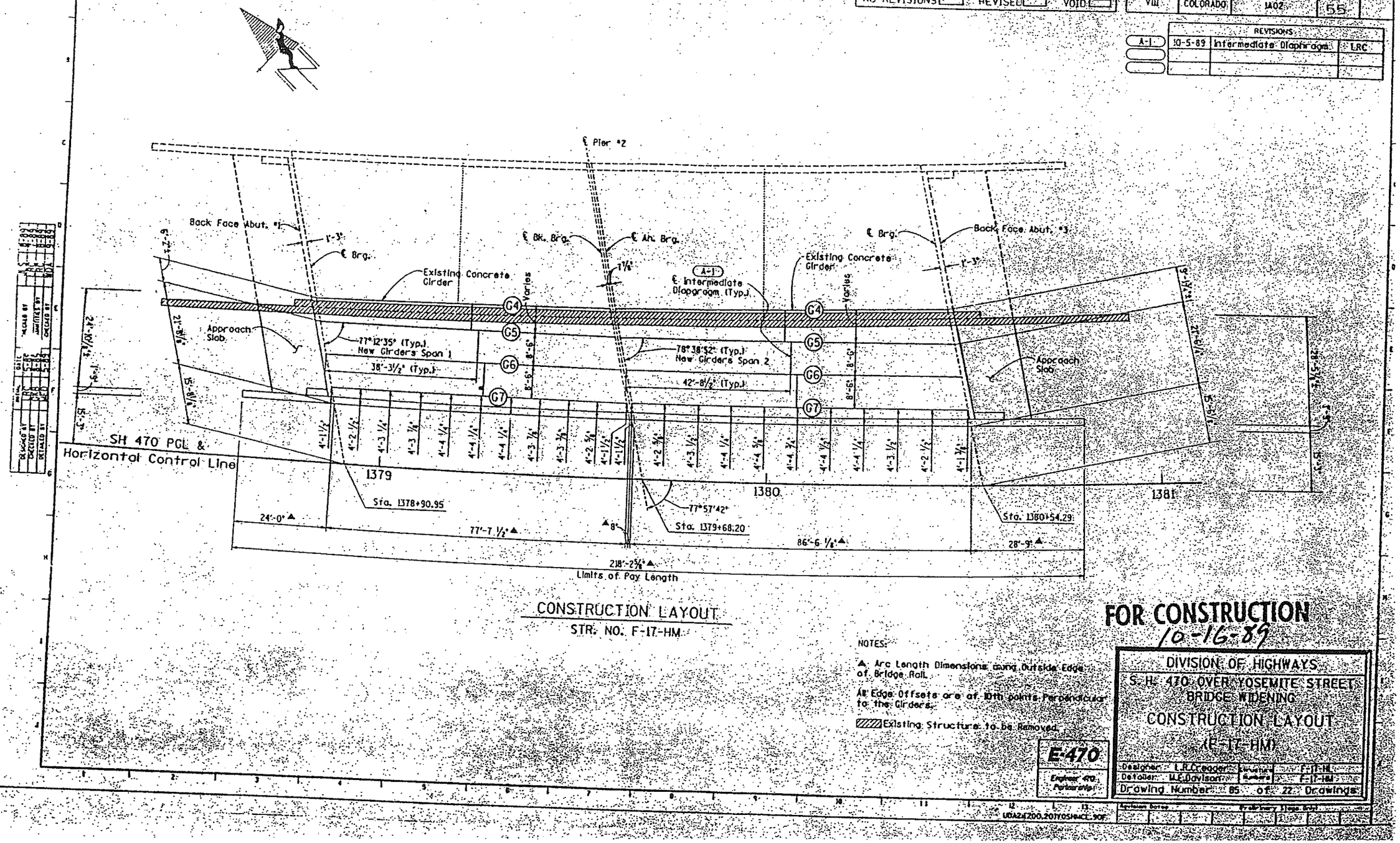

CONSTRUCTION LAYOUT
STR. NO. F-17-HM

NOTES:

▲ Arc Length Dimensions along Outside Edge of Bridge Rail.

All Edge Offsets are at 10th points Perpendicular to the Girders.

▨ Existing Structure to be Removed.

FOR CONSTRUCTION
10-16-89

DIVISION OF HIGHWAYS
S. H. 470 OVER YOSEMITE STREET
BRIDGE WIDENING
CONSTRUCTION LAYOUT
(F-17-HM)

Designed: L.R.Cadger	Number:	F-17-HL
Detailed: M.E.Davison	Number:	F-17-HM
Drawing Number: 85 of 22 Drawings		

E-470
Engineer 470 Partnership

USA2(200,207)YOSEMICE.90F

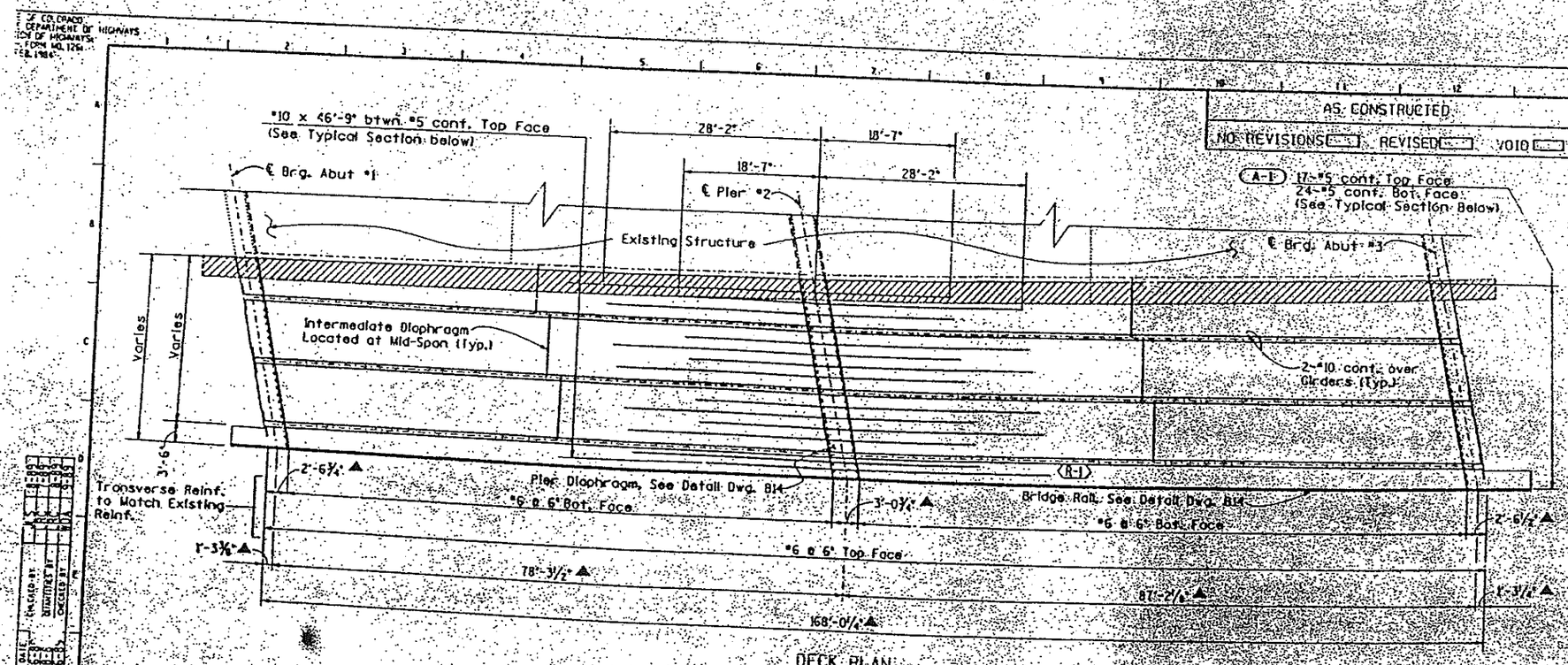

DECK PLAN

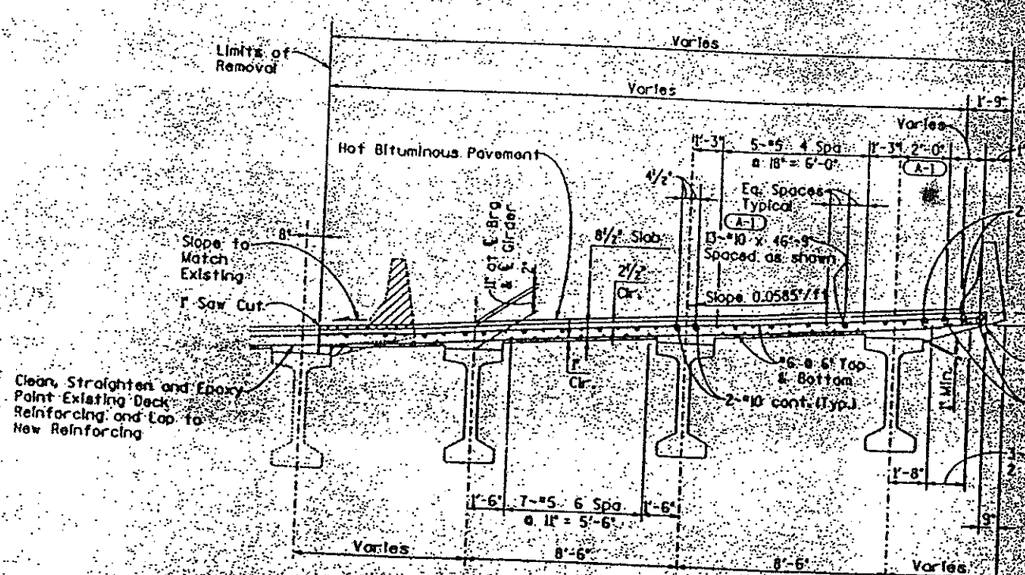

TYPICAL SECTION

AS CONSTRUCTED

NO REVISIONS ☐ REVISED ☐ VOID ☐

FED. ROAD REGION	DIVISION	PROJ. NO.	SHEET NO.	SHEET TOTALS
VIII	COLORADO	1A02	65	

REVISIONS			
A-1	10-5-89	REINFORCING CORRECTION	LRC

NOTES:

Existing Concrete and Longitudinal Rebar to be removed.

▲ Arc Length Dimensions along Outside Edge of Bridge Rail.

FOR CONSTRUCTION
10-16-89

DIVISION OF HIGHWAYS

S. H. 470 OVER YOSEMITE STREET BRIDGE WIDENING

SUPERSTRUCTURE DETAILS (F-17-HM)

E-470
Engineer 470 Partnership

Designer: L.R.Creager | Structure Number: F-17-HL
Detailer: M.E.Davison | F-17-HM
Drawing Number: B15 of 22 Drawings

Revision Dates | Preliminary Stage Only

UDA2X200.20JYOSHMSS.90M

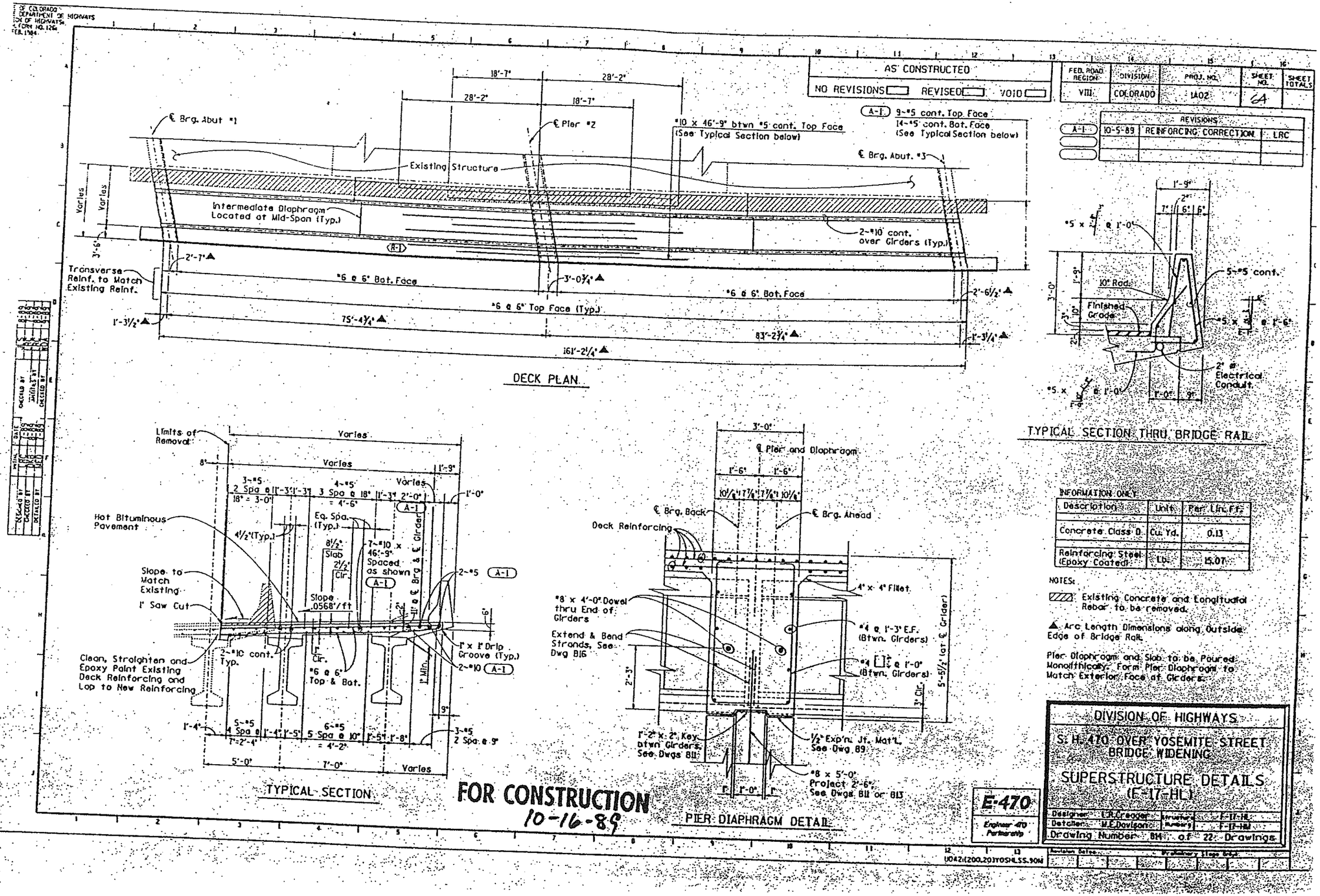

AS CONSTRUCTED
NO REVISIONS
REVISED
VOID
FED. ROAD REGION
VIII
DIVISION
COLORADO
PROJ. NO.
1A02
SHEET NO.
64
SHEET TOTALS
REVISIONS
A-1
10-5-89
REINFORCING CORRECTION
LRC
℄ Brg. Abut #1
℄ Pier #2
℄ Brg. Abut. #3
Existing Structure
Intermediate Diaphragm Located at Mid-Span (Typ.)
#10 x 46'-9" btwn #5 cont. Top Face (See Typical Section below)
9-#5 cont. Top Face
14-#5 cont. Bot. Face (See Typical Section below)
2-#10 cont. over Girders (Typ.)
Transverse Reinf. to Match Existing Reinf.
#6 @ 6" Bot. Face
#6 @ 6" Top Face (Typ.)
75'-4¾"
83'-2¾"
161'-2¼"
DECK PLAN
TYPICAL SECTION THRU BRIDGE RAIL
5-#5 cont.
10" Rad.
Finished Grade
2" ø Electrical Conduit
Limits of Removal
Hot Bituminous Pavement
Slope to Match Existing
1" Saw Cut
Clean, Straighten and Epoxy Paint Existing Deck Reinforcing and Lap to New Reinforcing
Slope .0568'/ft
1" x 1" Drip Groove (Typ.)
TYPICAL SECTION
℄ Pier and Diaphragm
℄ Brg. Back
℄ Brg. Ahead
Deck Reinforcing
#8 x 4'-0" Dowel thru End of Girders
Extend & Bend Strands, See Dwg B16
4" x 4" Fillet
#4 @ 1'-3" E.F. (Btwn. Girders)
1'-2" x 2" Key btwn Girders, See Dwgs B11
½" Exp'n. Jt. Mat'l, See Dwg B9
#8 x 5'-0" Project 2'-6", See Dwgs B11 or B13
PIER DIAPHRAGM DETAIL
INFORMATION ONLY
Description | Unit | Per Lin. Ft.
Concrete Class D | Cu. Yd. | 0.13
Reinforcing Steel (Epoxy Coated) | Lb. | 15.07
NOTES:
Existing Concrete and Longitudinal Rebar to be removed.
Arc Length Dimensions along Outside Edge of Bridge Rail.
Pier Diaphragm and Slab to be Poured Monolithically. Form Pier Diaphragm to Match Exterior Face of Girders.
DIVISION OF HIGHWAYS
S. H. 470 OVER YOSEMITE STREET BRIDGE WIDENING
SUPERSTRUCTURE DETAILS (F-17-HL)
Designer: L.R. Creager
Detailer: M.E. Davison
Structure Number: F-17-HL
Drawing Number: B14 of 22 Drawings
E-470
Engineer 470 Partnership
FOR CONSTRUCTION
10-16-89

STANDARD EB-618-54

AS CONSTRUCTED	FED. ROAD REGION	DIVISION	PROJ. NO.	SHEET NO.	SHT TOT.
NO REVISIONS ☐ REVISED ☐ VOID ☐	VIII	COLORADO	IAO2	66	

REVISIONS		

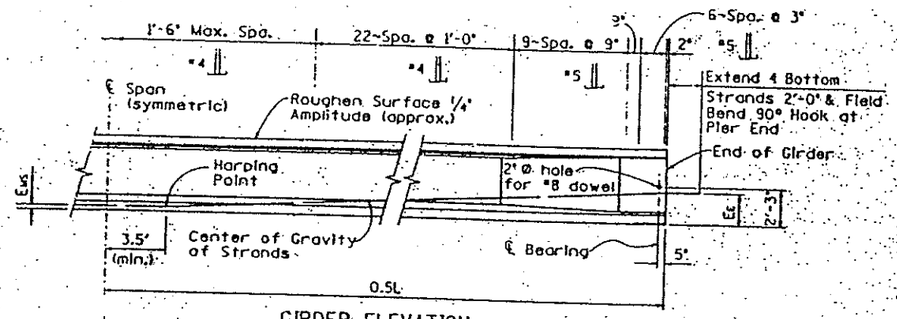

GIRDER ELEVATION

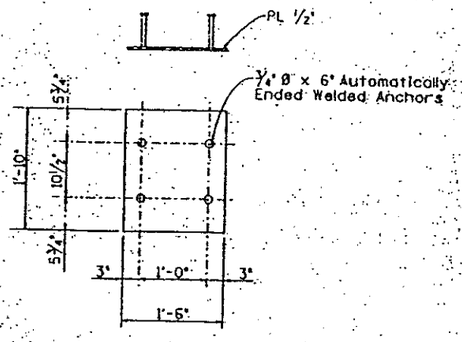

END PLATE DETAIL
Galvanize after Fabrication.

DEAD LOAD DEFLECTION DIAGRAM

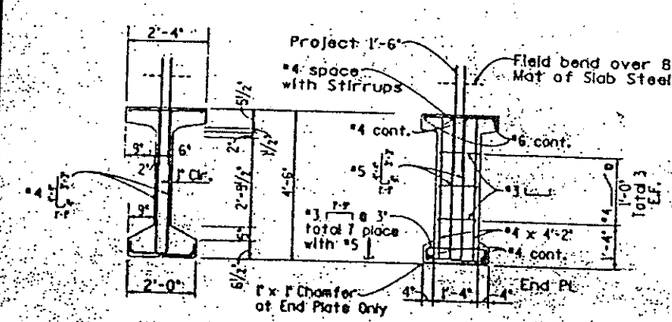

THROUGH MID SPAN THROUGH END PLATE

TYPICAL GIRDER SECTIONS

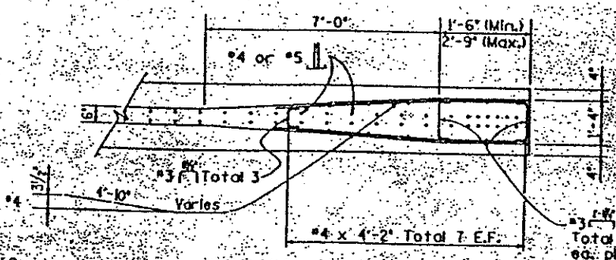

SECTION THRU END BLOCK

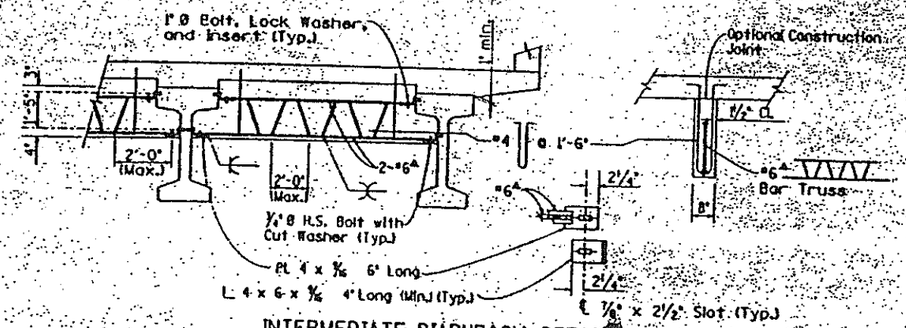

INTERMEDIATE DIAPHRAGM DETAILS
For Location of Diaphragm, see Construction Layout.

△#6 bar shall be ASTM A706 or 1/4" ø A36.

NOTES

All work necessary to fabricate and install the integral parts of the girder including, #6 Bar Truss and elastomeric leveling and bearing pads as shown on the plans shall be included in the bid price for Item No. 618, Prestressed Concrete Unit.

When approved by the Engineer, a minimum of tack welding will be permitted on ASTM A706 uncoated reinforcing steel.

Reinforcing projecting from the top of the girder and reinforcing within eight feet of an expansion device in the bridge deck shall be epoxy coated. Damaged coating on girder reinforcing need not be repaired.

At girder ends not embedded in concrete diaphragms, cut strands off 1" below the surface of the concrete and finish with an approved epoxy grout. At girder ends embedded in concrete diaphragms, cut strands to project 3". Do not make cosmetic repairs (damage less than 1/2") dead to the parts of the girders embedded in concrete.

Use 1/2" ø fs=270 KSI low relaxation strands meeting the requirements of ASTM A416 Grade 270. Alternate strands are 1/2" ø stress relieved strands meeting the requirements of ASTM A416 Grade 270. If stress relieved strands are used, the jacking force and initial concrete strengths shall be adjusted as appropriate to provide the final force shown. The fabricator shall include design calculations with the shop plans.

The minimum distance between groups or individual strands shall be 1 3/4" measured between centers of adjacent strands. The minimum cover for prestressing steel is 1 1/2".

A minimum of two harping points shall be used per girder.

As = is the minimum area of the prestressing steel.

fs = is the ultimate strength of the prestressing steel.

fi = is the jacking force per girder including all losses.

ff = is the final force per girder after all losses.

fci = is the required concrete strength at release of prestress force.

fc = is the required concrete strength at 28 days of age.

Δ = is the deflection or centerline of span due to cast-in-place slab, diaphragms, asphalt course, rails, and walks.

Concrete shall be Class S.

Entrained air is not required for girder concrete.

End Blocks shall be used on all girders unless otherwise noted.

Use 1/2" chamfer on all corners except as noted.

Expected camber is projected to 90 days girder age. If girders, deck forms, and reinforcing will not be placed before that girder age, weights, temporary tensioning, or other means approved by the Engineer shall be used to limit camber growth. Prior to deck pour, measure and report E-470 Project Engineer to camber is exceeding the expected camber by more than 1 1/2".

Use and installation of the #6 Bar Truss shall not relieve the Contractor of his full responsibility to construct the work in a manner which provides all necessary rigidity, supports all loads imposed, and provides in the finished structure the lines and grades indicated on the plans.

No girders shall be erected and left unbraced. The #6 Bar Truss shall be connected to the adjacent girders simultaneously with the erection of the girders.

For girders passing over traffic, the #6 Bar Truss shall be connected to the girders prior to the release of the erection equipment.

The Contractor is responsible for determining necessary bracing requirements, and for providing adequate bracing for the specific wind and weather conditions to be encountered for each specific project.

GIRDER SCHEDULE

Span No.	Girder No.	L (Feet)	A_s (Square Inch)	E_{ss} (Inch)	E_{ec} (Inch)	f_{ci} (KSI)	f_c (KSI)	Concrete Strength f_{ci} (PSI)	Concrete Strength f_c (PSI)	Δ (Inch)	Expected Camber (Inch)
1	5	77'-5"	3.98	2.86	14.67	806	618	4100	5000	L032	L775
2	5	86'-3"	5.20	3.16	13.58	1053	768	5300	5500	L596	2.529
1	6	77'-5"	3.98	2.86	14.67	806	618	4100	5000	L032	L775
2	6	86'-3"	5.20	3.16	13.58	1053	768	5300	5500	L596	2.529
1	7	77'-5"	3.98	2.86	14.67	806	618	4100	5000	0.948	L775
2	7	86'-3"	5.20	3.16	13.58	1053	768	5300	5500	L464	2.529
1	9	77'-2"	3.98	2.86	14.67	806	610	4100	5000	0.852	L767
2	9	85'-2"	3.98	2.86	14.67	806	623	4000	5000	L272	L969
1	10	77'-2"	3.98	2.86	14.67	806	610	4100	5000	0.840	L767
2	10	85'-2"	3.98	2.86	14.67	806	623	4000	5000	L248	L969

FOR CONSTRUCTION
10-16-89

DIVISION OF HIGHWAYS
S.H. 470 OVER YOSEMITE STREET
BRIDGE WIDENING
COLORADO G54 GIRDER

E-470
Engineer and Reference

Designer:	E.R.Creager	Project	E-17-HL
Detailer:	M.E.Davison	Series	E-17-HM
Drawing Number:	8/6	of 22	Drawings

STANDARD EB-618-54

GENERAL NOTES

All work shall be done according to the Standard Specifications of the Division of Highways, State of Colorado, applicable to the Project.

For construction details of structure excavation and structure backfill, see Standard M-206-2.

For Structure Number installation, see Standard S-614-12.

Expansion joint material shall meet A.A.S.H.T.O. Specification M-213.

Class 5 Colored Coating finish will be required. The color will be from the Federal Standard No. 595a and will be Red Series No. 31667 (Tan). The color will be as directed by the Engineer and will be selected from test panels supplied by the Contractor.

Grade 60 reinforcing steel is required for #4 bars and larger.

The following table gives the minimum lap splice length for reinforcing bars:

Bar Size	#4	#5	#6	#7	#8	#9	#10	#11
Splice Length for Class A Conc.	1'-0"	1'-3"	1'-8"	2'-3"	3'-0"	3'-10"	4'-10"	5'-11"
Splice Length for Class D Conc.	1'-0"	1'-3"	1'-6"	2'-0"	2'-7"	3'-4"	4'-2"	5'-1"

Applied wind loads and earthquake loads were not considered in analyzing the structure for stability during the construction stages.

E.F. = Each Face
F.F. = Far Face.
N.F. = Near Face
T.F. = Top Face
B.F. = Bottom Face
E.C. = Epoxy Coated

Pier Cap and Bridge Deck to be poured Monolithically.

DESIGN DATA:

Current A.A.S.H.T.O. Design Specifications.

Live Load: A.A.S.H.T.O. HS-20-44 and Interstate Alternate.

Dead Load: Assumes 48 lbs. per sq. ft. for Bituminous Pavement.

Reinforced Concrete:
#4 Bars and larger, f_s = 24,000 psi except f_s = 20,000 psi in transverse deck slab between girders.

Class D Concrete : f_c = 1800 psi, n = 8

Class A Concrete : f_c = 1200 psi, n = 9

Prestressed Concrete : f'_s = 270,000 psi
f'_c = (See Details)

CROSS REFERENCE DRAWING NUMBER
SECTION OF CENTRAL CONSTRUCTION

INITIAL | DATE | DRAWN BY | CHECKED BY | QUANTITIES BY | CHECKED BY | DETAILED BY | CHECKED BY
DMG | DCH | DMG | DCH | LMK | DMG | DMC | DMG

Final
SUMMARY OF QUANTITIES

	Item	Description	Unit	STRUCTURE NO. F-17-HL Super-struct.	Abut. 1	Pier 2	Abut. 3	Totals	STRUCTURE NO. F-17-HM Super-struct.	Abut. 1	Pier 2	Abut. 3	Totals	Total F-17-HL F-17-HM
③	206	Structure Excavation	Cu. Yd.		~~343~~	~~703~~	~~553~~	~~2697~~		~~454~~	~~156~~	~~56~~	~~257~~	~~526~~
	206	Structure Backfill (Class 1)	Cu. Yd.		694		652	1346		551		635	1186	2532
	206	Structure Backfill (Class 2)	Cu. Yd.			~~134~~		~~135~~			~~133~~		~~108~~	~~243~~
⑥	403	Hot Bituminous Pavement (Gr. Ex) (Haul and Asphalt)	Ton	90				90	90				90	180
①	502	Steel Piling (HP 12x53)	Lin. Ft.		~~155~~			337		202			394	
	502	Steel Piling (Cut-Off)	Lin. Ft.		~~76~~ 3		182	~~358~~ 3		~~339~~ 7		184	~~365~~ 7	~~721~~ 10
	507	Concrete Slope and Ditch Paving (Reinforced)	Cu. Yd.		~~45.06~~ ~~42.7~~		~~54.68~~ ~~53.3~~	~~99.64~~ ~~96~~		~~44.92~~ ~~42.5~~		~~56.05~~ ~~52.5~~	~~100.97~~ ~~95~~	~~200.61~~ ~~191~~
⑥	515	Waterproofing (Membrane)	Sq. Yd.	713				713	711				711	1424
	518	Bridge Compression Joint Sealer	Lin. Ft.		14		14	28		14		14	28	56
④	G01	Concrete Class A (Bridge)	Cu. Yd.		36.9	100.5	96.6	292		60.3	98.7	87.0	266	558
⑤	G02	Reinforcing Steel CMD 2	Lb.	~~231.5~~ ~~33,961~~	~~33.9~~ ~~49,723~~	~~5,544~~	~~36.6~~ ~~53,670~~	~~300~~ ~~44,029~~	~~231.5~~ ~~33,950~~	~~33.2~~ ~~48,681~~	~~5,544~~	~~35.3~~ ~~51,761~~	~~305.0~~ ~~44,725~~	~~605.5~~ ~~88,754~~
	G02	Reinforcing Steel (Epoxy Coated) CMD 2	Lb.	~~25,224~~ 36,044	555		504	~~36,687~~ 39,703	~~35,228~~ 38,044	563		~~41,276~~ 39,248	~~76,504~~ 77,292	~~153,996~~ 155,996
	G13	3/8 Inch Electrical Conduit	Lin. Ft.	8				8	8				8	16
	G13	1 1/2 Inch Electrical Conduit	Lin. Ft.	~~249~~ 248				~~249~~ 248	~~256~~ 256				~~505~~ 504	~~1009~~ 1434
	G18	Prestressed Concrete Unit (I Section) (75 to 80 Feet)	Ea.	4				4	4				4	8
	G18	Prestressed Concrete Unit (I Section) (85 to 90 Feet)	Ea.	4				4	4				4	8
	626	Mobilization	L.S.					0.16					0.16	0.32
	F/A01	Minor Contract Revisions	F.A.					0.16					0.16	0.32
	F/A03	MBE Incentives	F.A.					0.16					0.16	0.32
②		1/2" Expansion Joint Material	Sq. Ft.		58	58	58	174		53	58	52	163	337

① HP5 10x57 may be used in lieu of HP 12x53.

② To be included in the bid price for Item G01, Concrete Class D (Bridge).

③ Includes 191.0 cu. yd. Structure Excavation for Concrete Slope and Ditch Paving.

④ Includes 102.7 cu. yd. for 4 Approach Slabs.

⑤ Includes 12,873 lbs. for 4 Approach Slabs.

⑥ For Information Only (Future Construction.)

AS CONSTRUCTED
NO REVISIONS | REVISED R-9-84 | (C-D)

FEDERAL AID PROJECT NO.	DIVISION	AREA NO.	SHEET NO.
STR	COLORADO	IXFU 470-1(8)	31

REVISIONS

BRIDGE STANDARD D

INDEX OF DRAWINGS

Dwg. No.	Title
B-1	General Information - Summary of Quantities
B-2	General Layout
B-3	Engineering Geology
B-4	Construction Layout
B-5	Piling Layout
B-6	Abutment 1 (F-17-HL)
B-7	Abutment 3 (F-17-HL)
B-8	Abutment 1 (F-17-HM)
B-9	Abutment 3 (F-17-HM)
B-10	Abutment Details
B-11	Pier 2 (F-17-HL)
B-12	Pier 2 (F-17-HM)
B-13	Superstructure Details
B-14	Colorado G-54 Girders
B-15	Rail Details
B-16	Rail Details
B-17	Slope Paving Details
B-18	Bridge Deck Elevations (F-17-HL)
B-19	Bridge Deck Elevations (F-17-HL)
B-20	Bridge Deck Elevations (F-17-HM)
B-21	Bridge Deck Elevations (F-17-HM)
B-22	Roadway Approaches (F-17-HL)
B-23	Roadway Approaches (F-17-HM)
B-24	Bench Mark
B-25	Approach Slab Details

BRIDGE DESCRIPTION

2-Simple Span (76'-4", 84'-4") Concrete Slab and Prestressed Girder Bridges.

Over Yosemite Street
38'-0" Roadways Curb to Curb

78°01'15" Skew from Layout Line (F-17-HL)
78°51'15" Skew from Layout Line (F-17-HM)
1'-9" Special Bridge Rails

MERREN ENGINEERING CORPORATION
Consulting Engineers

Reviewed

DIVISION OF HIGHWAYS
GENERAL INFORMATION
SUMMARY OF QUANTITIES

Station 373+89.23 to 380+53.32 (F-17-HL)
Station 2378+78.32 to 3385+88.59 (F-17-HM)

Design Section | Date | Structure | F-17-HL
Detail | Number | | F-17-HM

STATE OF COLORADO
DEPARTMENT OF HIGHWAYS
DIVISION OF HIGHWAYS
FORM NO. 164
REV. MAR. 1972

AS CONSTRUCTED			
NO REVISIONS		REVISED	VOID

FEDERAL AID REGION NO.	DIVISION	PROJ. NO.	SHEET NO.	TOTAL SHEETS
VIII	COLORADO	EXEC 470-1(8)	32	

REVISIONS			

INITIAL	DATE	CHECKED BY	D.G.H.	C.A.E.
DESIGNED BY	D.G.H.		R.A.M.	I.A.E.
DRAWN BY	S.A.	QUANTITIES BY		
CHECKED BY	D.M.G.	CHECKED BY		
DETAILED BY				

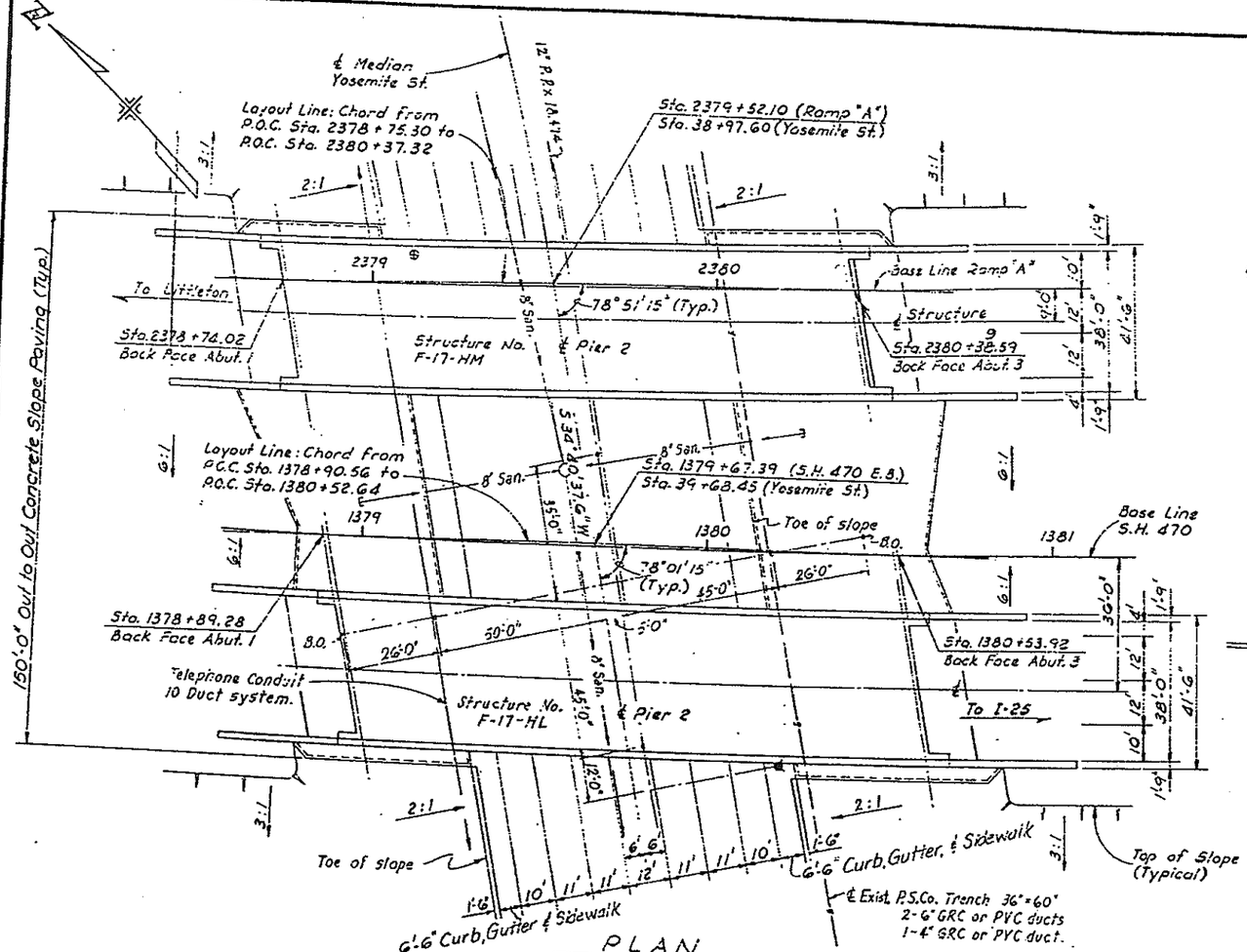

PLAN

⊕ Indicates location of minimum vertical clearance. Field verify locations of all utilities.

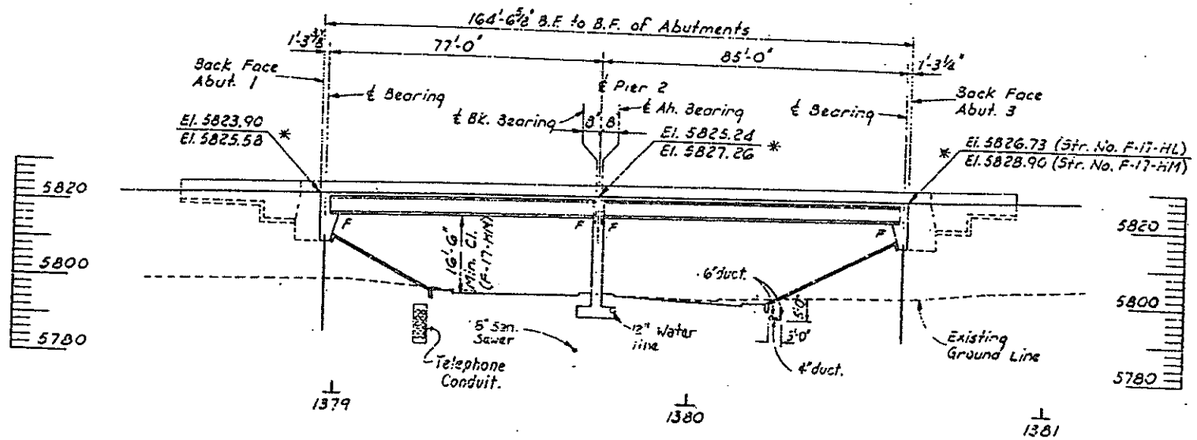

SECTION

TAKEN AT ℄ STR. NO. F-17-HL - STR. NO. F-17-HM SIM. EXCEPT AS NOTED
* FINISHED ROADWAY ELEVATIONS

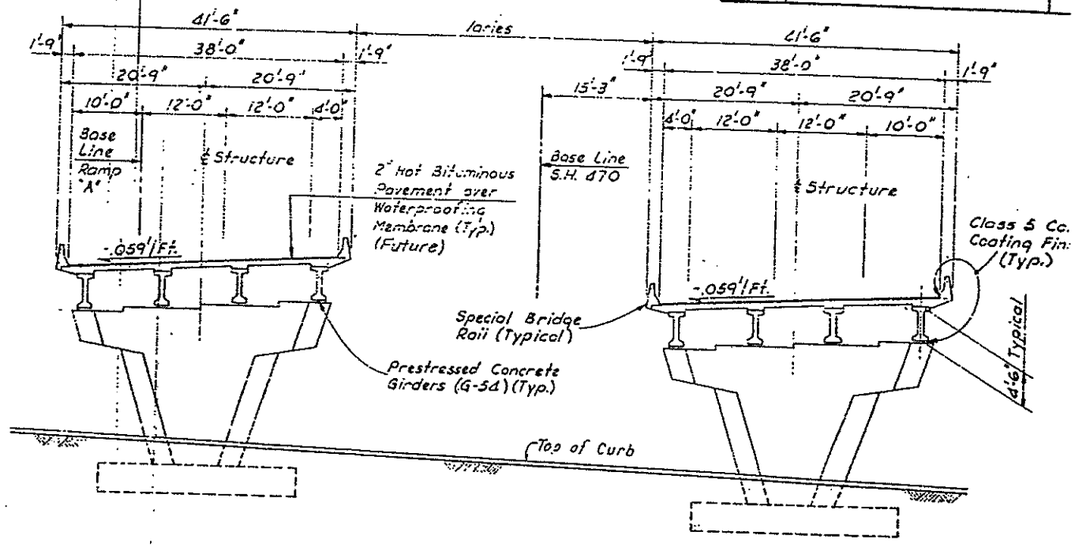

TYPICAL SECTION

CURVE DATA

S.H. 470 E.B. (Str. No. F-17-HL)
$\Delta = 49°48'46"$ Lt.
$T_s = 1670.73'$
$\Delta_c = 44°33'46"$
$D_c = 1°45'$
$T_c = 1341.54$
$L_c = 2546.43'$
$R_c = 3274.04'$
e (max) = 0.059'/Ft.
$\theta_s = 2°37'30"$
$L_s = 300'$
L.T. = 200.02'
S.T. = 100.02'

RAMP "A" (Str. No. F-17-HM)
$\Delta = 21°14'21.6"$ Lt.
$T_s = 745.45'$
$\Delta_c = 18°35'22.7"$
$D_c = 1°47'21.8"$
$T_c = 524.07'$
$L_c = 1038.92'$
$R_c = 3201.953'$
e (max) = 0.059'/Ft.
$\theta_s = 2°38'55.9"$
$L_s = 296.06'$
L.T. = 197.40'
S.T. = 98.71'

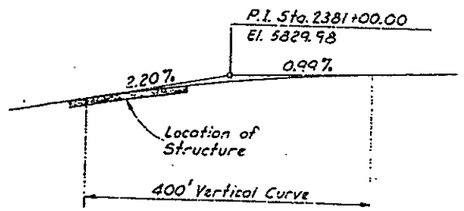

PROFILE GRADE - STR. NO. F-17-HM

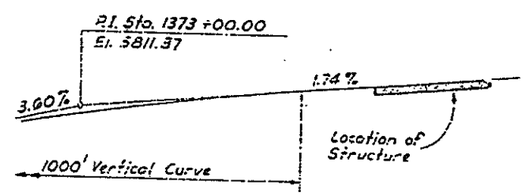

PROFILE GRADE - STR. NO. F-17-HL

Live Loading. HS-20-44 and Interstate Alternate

DIVISION OF HIGHWAYS

S.H. 470 OVER YOSEMITE STREET

GENERAL LAYOUT

Designer D. Horner | Structure F-17-HL (E.B.L.)

DOH FORM NO. 646
REVISED: JANUARY 1979

FED. ROAD REG. NO.	DIVISION	PROJECT NO.	SHEET NO.	TOTAL SHEETS
VIII	COLORADO	IXFU 470-1(8)	33	

AS CONSTRUCTED

NO REVISIONS 8-3-84 REVISED [ ] VOID [ ]

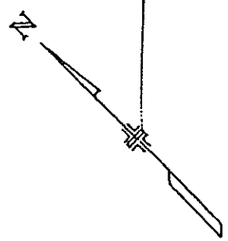

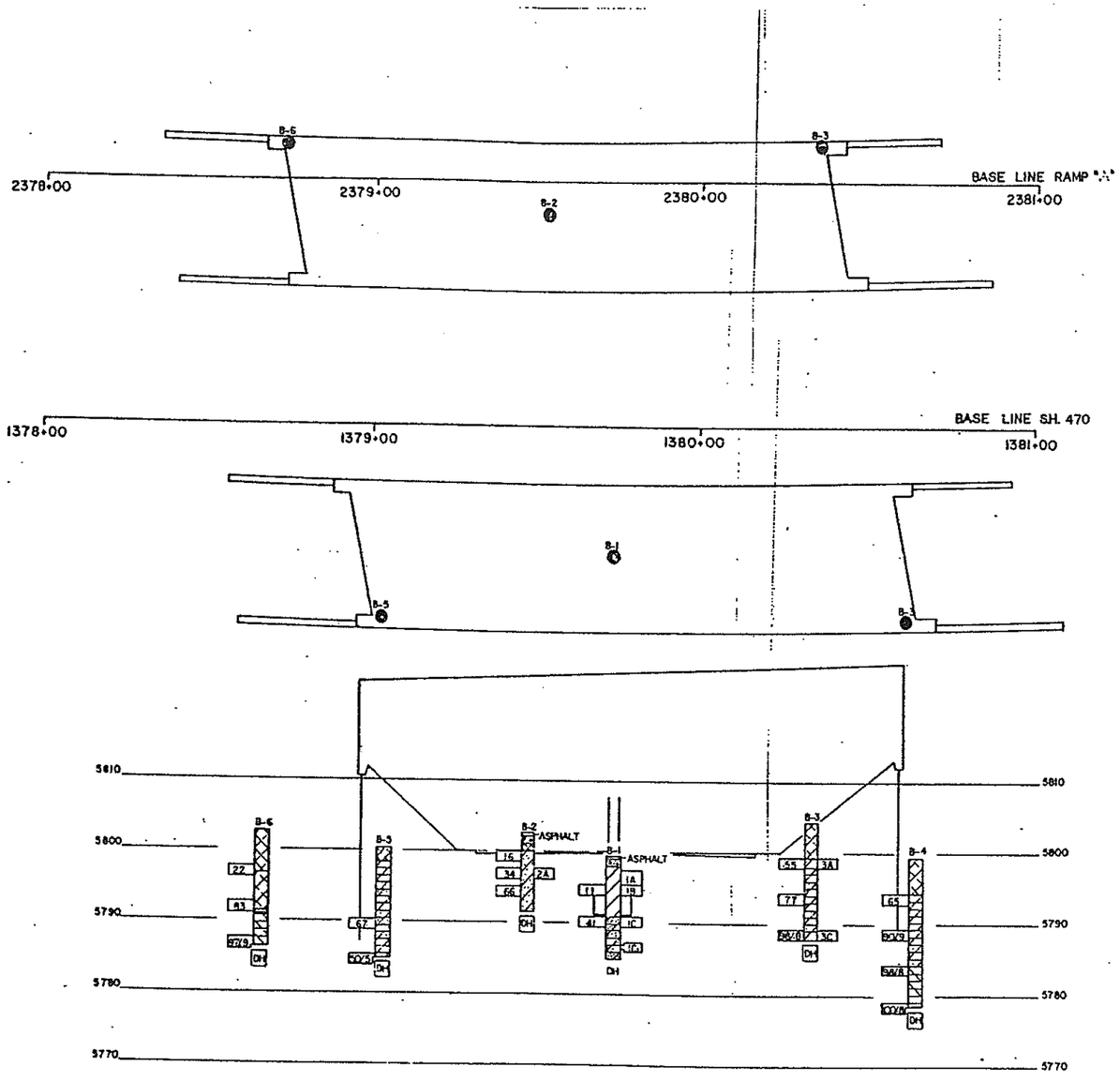

SUMMARY OF TEST RESULTS

Sample No.	Depth	Classification: Comm. of Engrs. or Visual	Classification: AASHTO	Grading Analysis: Percents: Gravel	Coarse Sand	Fine Sand	Silt & Clay	Atterberg Limits: Liquid Limit %	Plastic Limit %	Plasticity Index %	Water Content %	Dry Unit Weight γ P.C.F.	Unconfined Strength Qu T.S.F.	Triaxial Shear Strength: Ø	C P.S.I.	Dia. of Sample Inches
1A	2.0-4.0	SANDY CLAY	A-7-6(18)	0	13	17	70	50	23	27	25.8					
1B	4.0-5.5	CLAY	A-7-6(40)	0	2	4	94	63	26	37	27.5					
1C	8.5-10.0	SANDY CLAY	A-7-6(20)	0	1	23	76	50	24	26	25.0					
2A	5.0-6.5	CLAY	A-7-6(28)	0	1	2	91	51	23	28	22.7					
3A	5.0-6.5	CLAY	A-7-6(34)	1	1	7	91	58	24	34	22.0					
3C	15.0-16.3	CLAY	A-7-6(28)	0	1	13	86	54	24	30	19.8					
1C1	12.5-13.0	SANDY CLAY	A-7-6(14)	3	1	33	63	46	22	24	20.2	25.9	4.0			2.0

TYPE OF MATERIAL

- CLAYEY SILT
- SILTY CLAY
- SHALE
- CLAYEY SHALE
- SHALEY CLAY
- SANDY SHALEY CLAY
- AA ASPHALT
- GRAVELLY SAND
- SANDY CLAY
- CLAY
- SHALEY SANDY CLAY
- DH DRY HOLE

LEGEND

TEST BORING

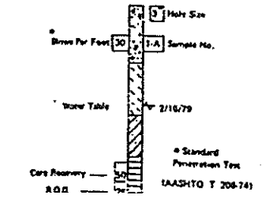

CONTINUOUS PENETRATION TEST

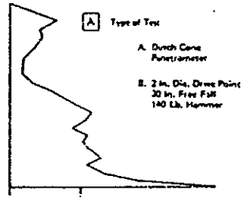

- Location of Test Boring
- Location of Continuous Penetration Test
- Rotary Boring
- Auger Boring

DIVISION OF HIGHWAYS

ENGINEERING GEOLOGY

S.H. 470 over YOSEMITE ST.

Geologist EB
Drawn by TC
Checked by GP
Date JUNE 11, 1932

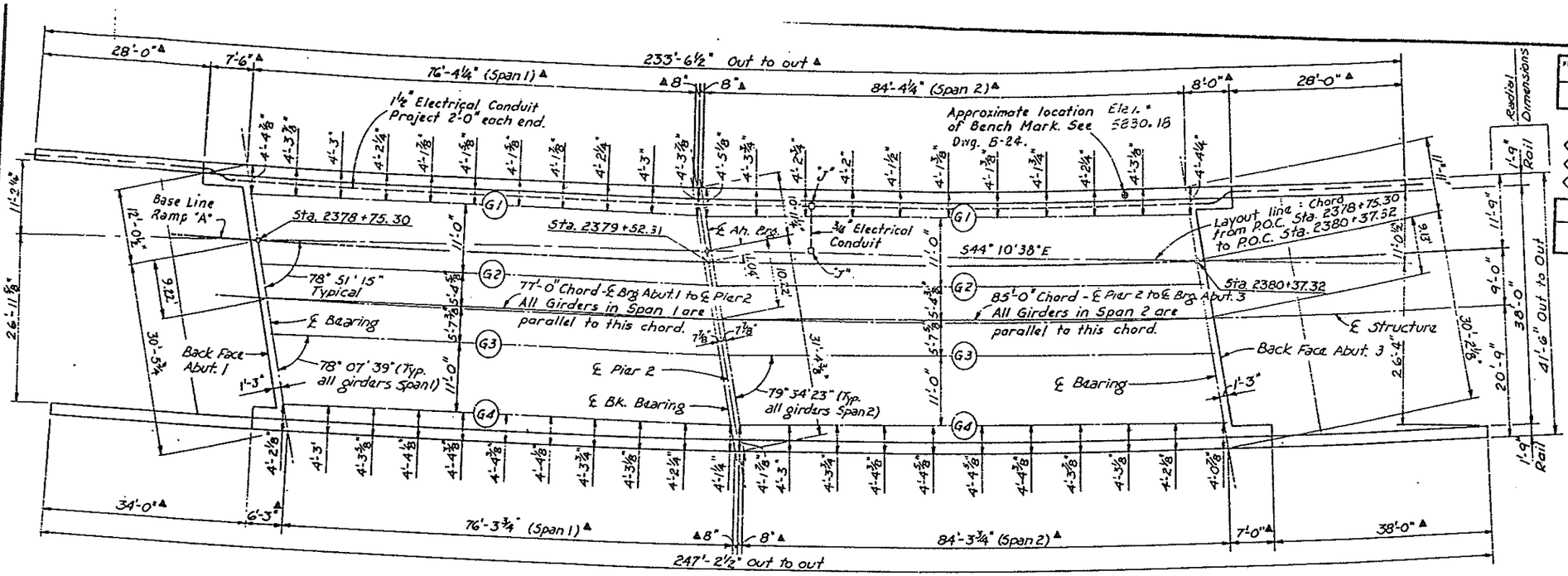

CONSTRUCTION LAYOUT
STRUCTURE NO. F-17-HM

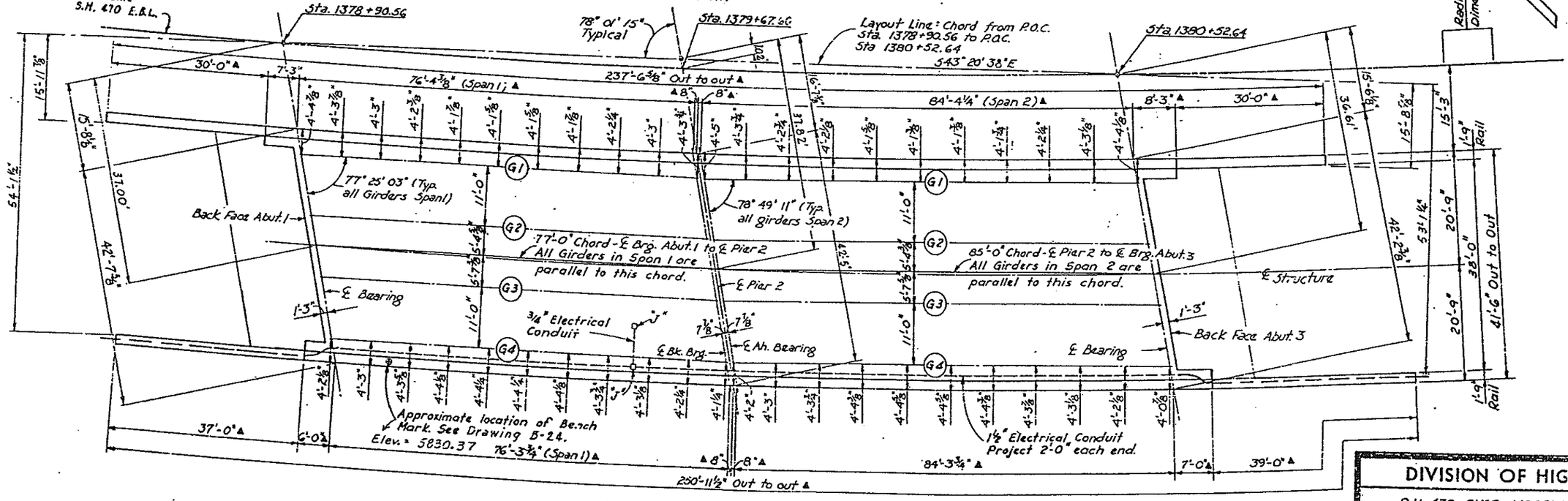

CONSTRUCTION LAYOUT
STRUCTURE NO. F-17-HL

FEDERAL ROAD REGION NO.	DIVISION	PROJ. NO	SHEET NO.	TOTAL SHEETS
VIII	COLORADO	IXFU 470-1(8)	34	

REVISIONS

AS CONSTRUCTED

NO REVISIONS ☐ REVISED 8-3-84 VOID ☐

"J" = 6"×6"×4" Junction Box flush with bottom of slab. Drain for interior condensation.

▲ = Arc length dimensions along outside edge of Bridge Rail.

All edge offsets are placed at 10th points normal to the girders.

	INITIAL	DATE	CHECKED BY
DESIGNED BY	D.G.H.		
CHECKED BY	D.H.G.		QUANTITIES BY
DETAILED BY	D.H.G.		CHECKED BY

DIVISION OF HIGHWAYS

S.H. 470 OVER YOSEMITE STREET

CONSTRUCTION LAYOUT

Designer	D. Horner	Structure Numbers	F-17-HL
Detailer	D. Griner		F-17-HM

AS CONSTRUCTED			
NO REVISIONS		REVISED 8-9-84	VOID

FEDERAL ROAD REGION NO.	DIVISION	PROJ. NO.	SHEET NO.	TOTAL SHEETS
VIII	COLORADO	IXFU 470-1(8)	35	

REVISIONS			

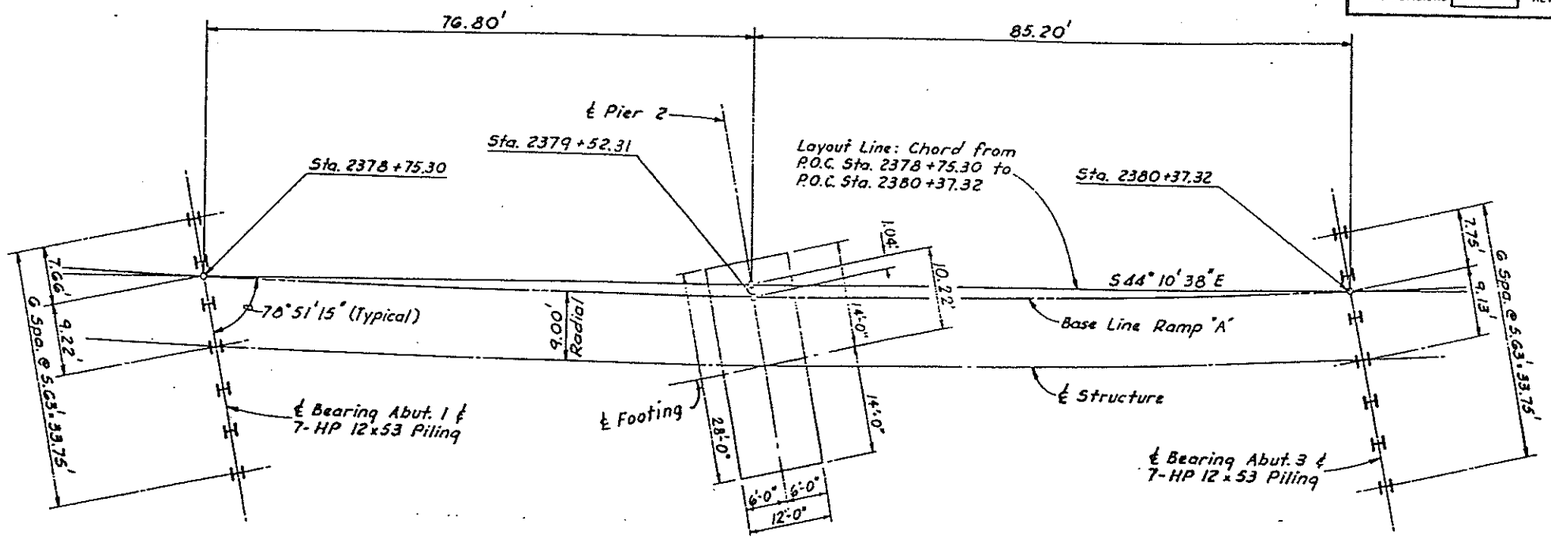

PILING LAYOUT
STRUCTURE NO. F-17-HM

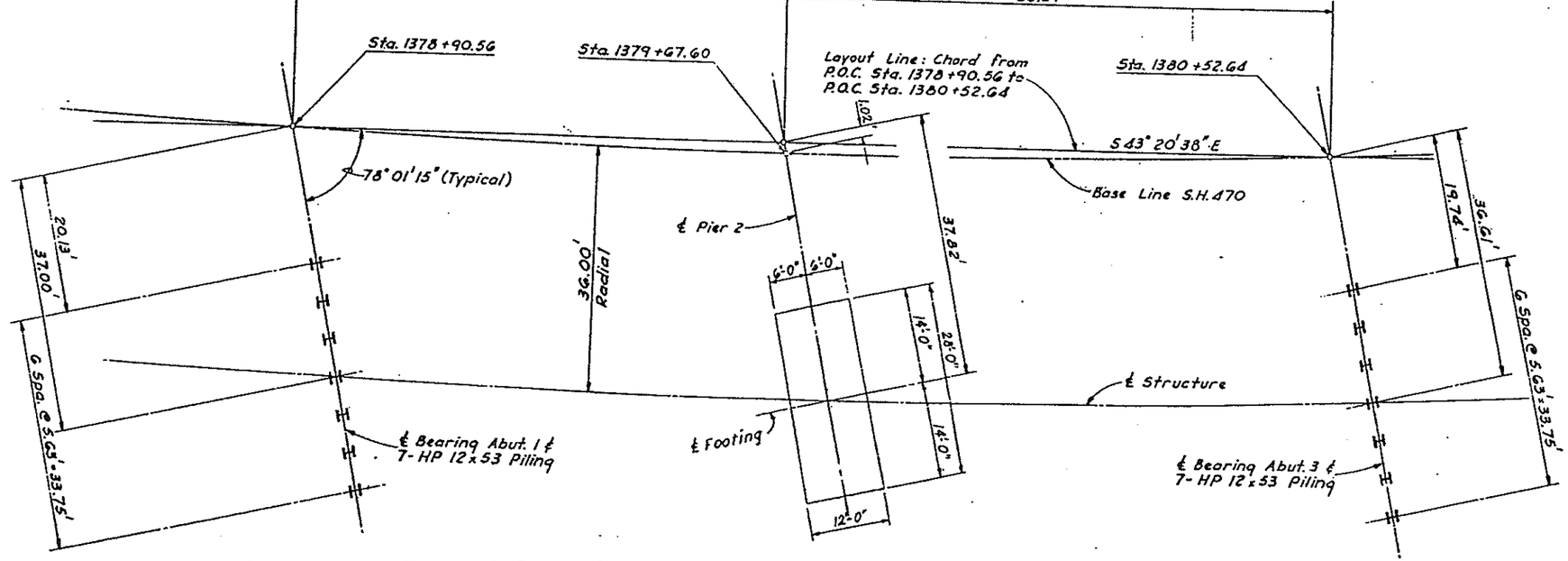

PILING LAYOUT
STRUCTURE NO. F-17-HL

STRUCTURE NO. F-17-HM

Pile Size	Location	As Constructed Est. Tip Elev.
HP 12x53	Abut. 1	5787.0
HP 12x53	Abut. 3	5791.0

STRUCTURE NO. F-17-HL

Pile Size	Location	As Constructed Est. Tip Elev.
HP 12x53	Abut. 1	~~5787.0~~ 5790
HP 12x53	Abut. 3	5789.0

Notes:
1. Maximum pier footing pressure = 3 Tons/Sq. Ft.
2. The piling dimensions shown are at the bottom of the concrete.
3. All piling shall be driven vertical.
4. All piling shall be End-bearing HP12x53 with the following Maximum Pile Loads:

Str. No. F-17-HM
Abut. 1 = 62 T.
Abut. 3 = 67 T.

Str. No. F-17-HL
Abut. 1 = 67 T.
Abut. 3 = 70 T.

DESIGNED BY	INITIAL	DATE
CHECKED BY	DGH	4-82
DETAILED BY	DMG	4-82
QUANTITIES BY	DMG	4-82
CHECKED BY		

DIVISION OF HIGHWAYS

S.H. 470 OVER YOSEMITE STREET

PILING LAYOUT

Designer	D. Horner	Structure Numbers	F-17-HL
Detailer	D. Griner		F-17-HM

DEPARTMENT OF HIGHWAYS
DIVISION OF HIGHWAYS
STATE HIGHWAY ENGR. 117
DEN. COLO. 1972

AS CONSTRUCTED			
NO REVISIONS	8-3-84	REVISED	VOID

FEDERAL ROAD REGION NO.	DIVISION	PROJ. NO.	SHEET NO.	TOTAL SHEETS
VIII	COLORADO	IXFU 470-1(8)	36	

REVISIONS			

	INITIAL	DATE	CHECKED BY		CHECKED BY	
DRAWN BY	DEH	4-82				
CHECKED BY	LMK	4-82	QUANTITIES BY	LMK	4-82	
DETAILED BY	LMK	4-82	CHECKED BY	DEH	4-82	

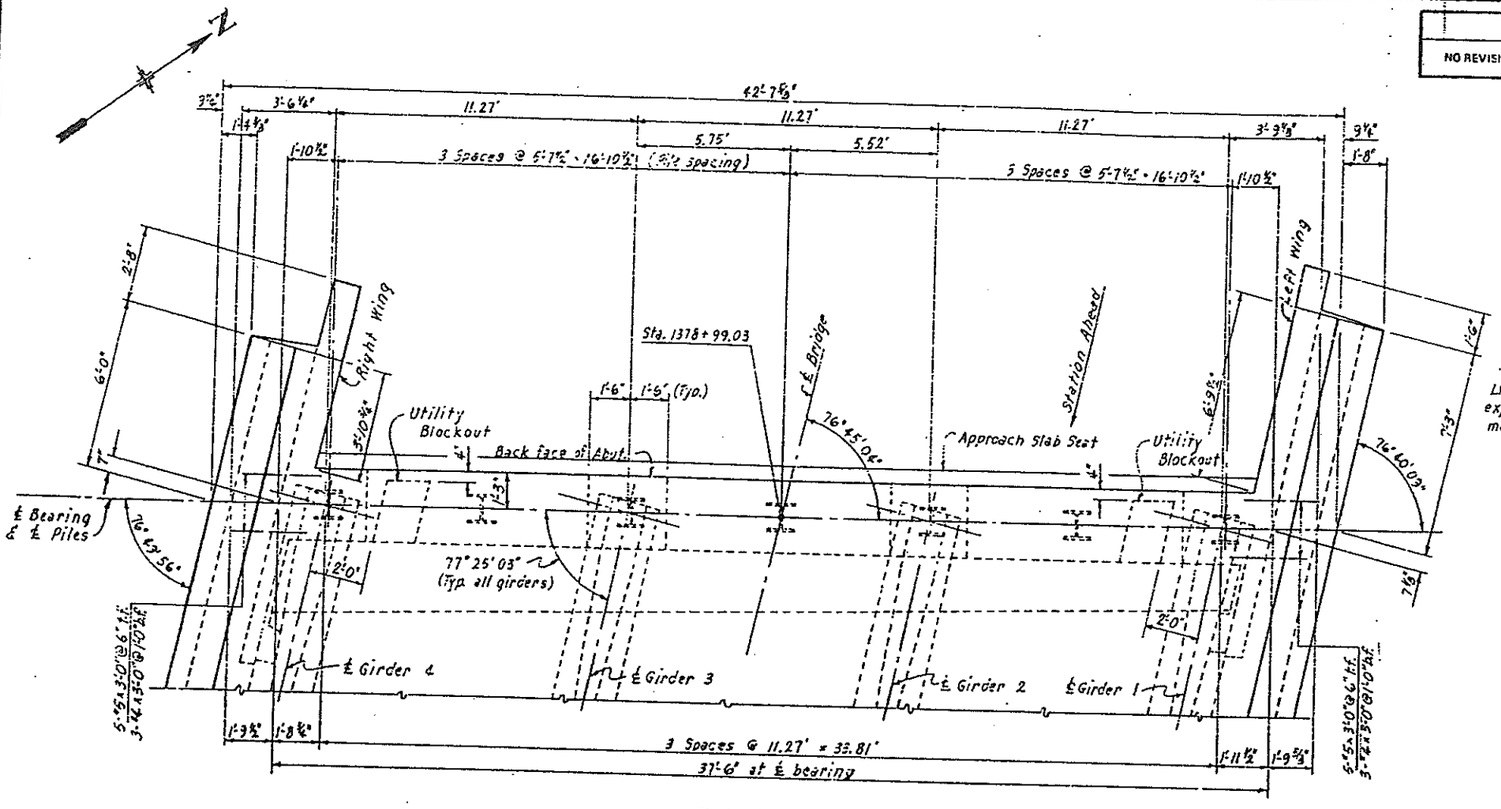

• PLAN •

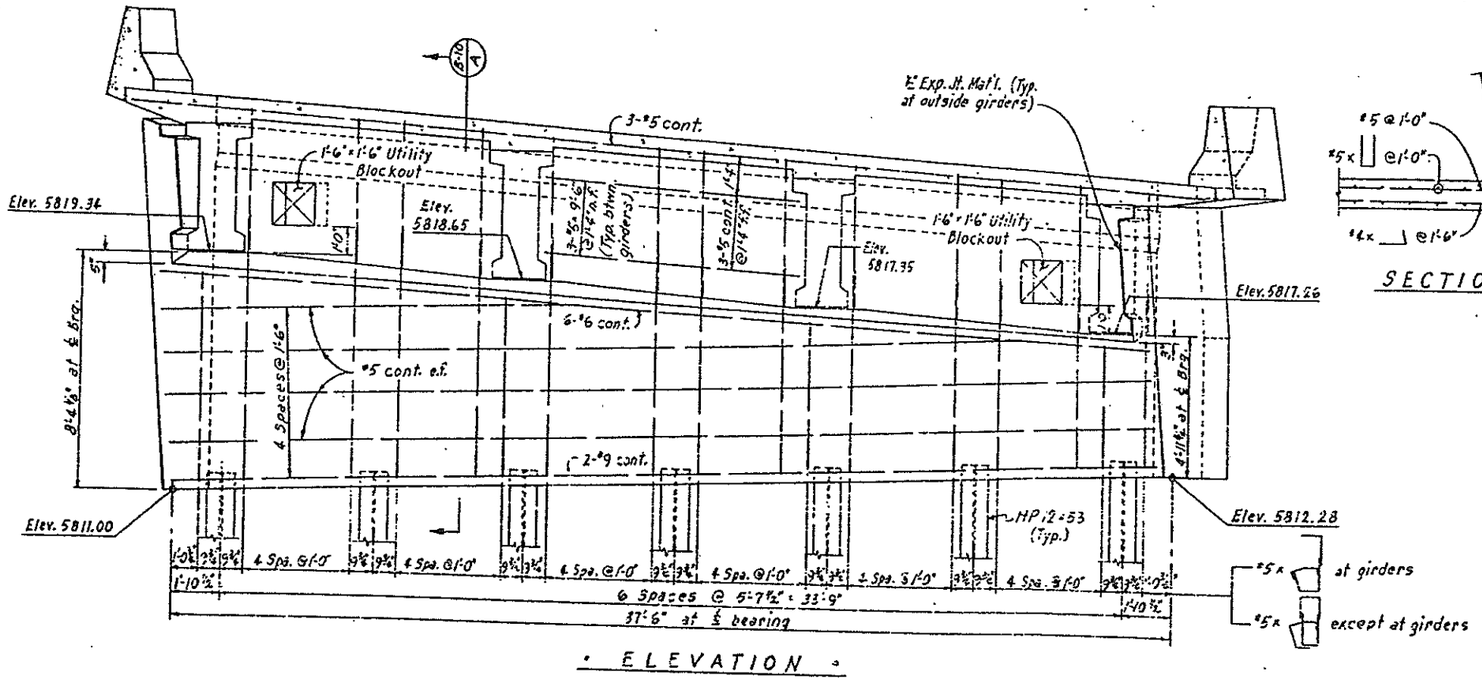

• ELEVATION •

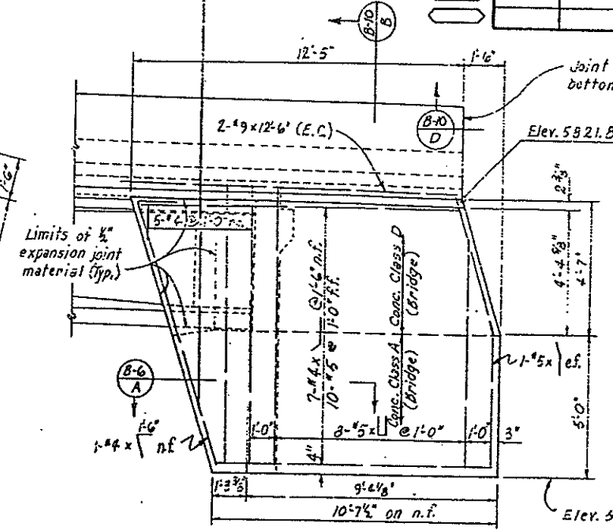

• ELEVATION - LEFT WING •

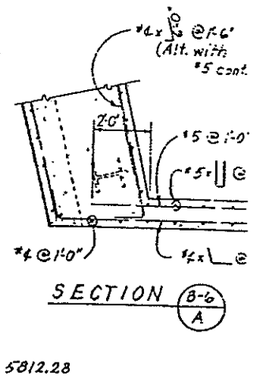

SECTION B-6 / B

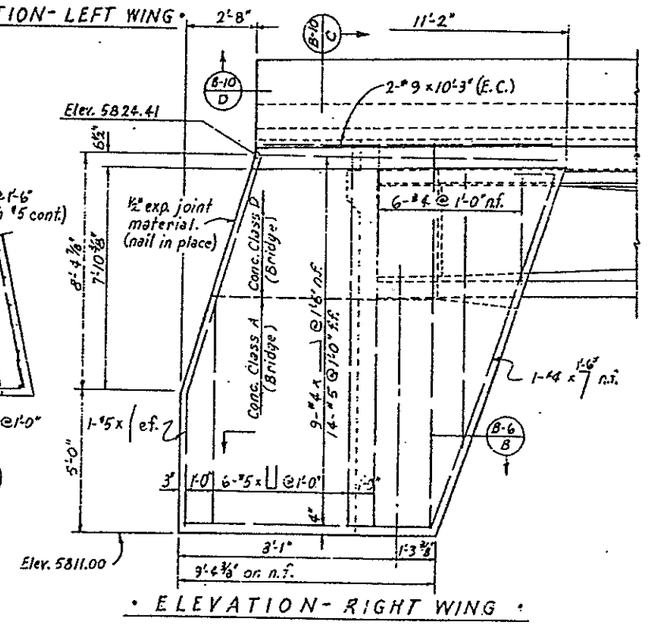

• ELEVATION - RIGHT WING •

DIVISION OF HIGHWAYS

S.H. 470 OVER YOSEMITE STREET

ABUTMENT 1
(F-17-HL)

Designer	D. Bonser	Structure Numbers	F-17-HL
Detailer	L. Walter		

STATE OF COLORADO
DEPARTMENT OF HIGHWAYS
DIVISION OF HIGHWAYS
FORM FHWA NO. 515
REV. MAR. 1957

AS CONSTRUCTED			
NO REVISIONS 8-9-34	REVISED	VOID	

FEDERAL ROAD REGION NO.	DIVISION	PROJ. NO.	SHEET NO.	TOTAL SHEETS
VIII	COLORADO	IXFU 470-1(8)	31	

REVISIONS			

INITIAL	DATE
DESIGNED BY D.G.H.	4-32
CHECKED BY L.H.K.	4-32
QUANTITIES BY L.H.K.	4-32
DETAILED BY L.H.K.	4-32
CHECKED BY D.G.H.	4-32

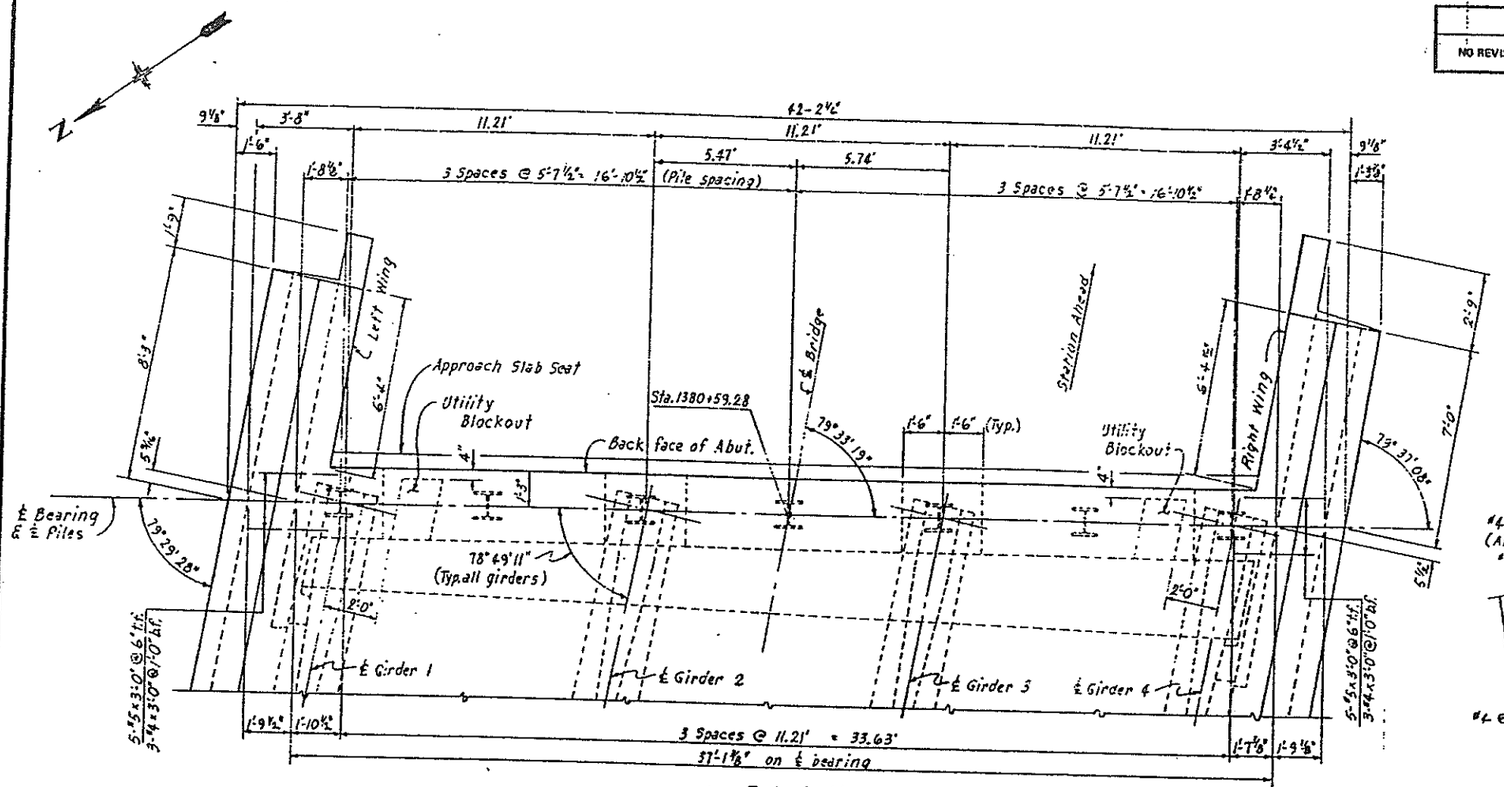

• PLAN •

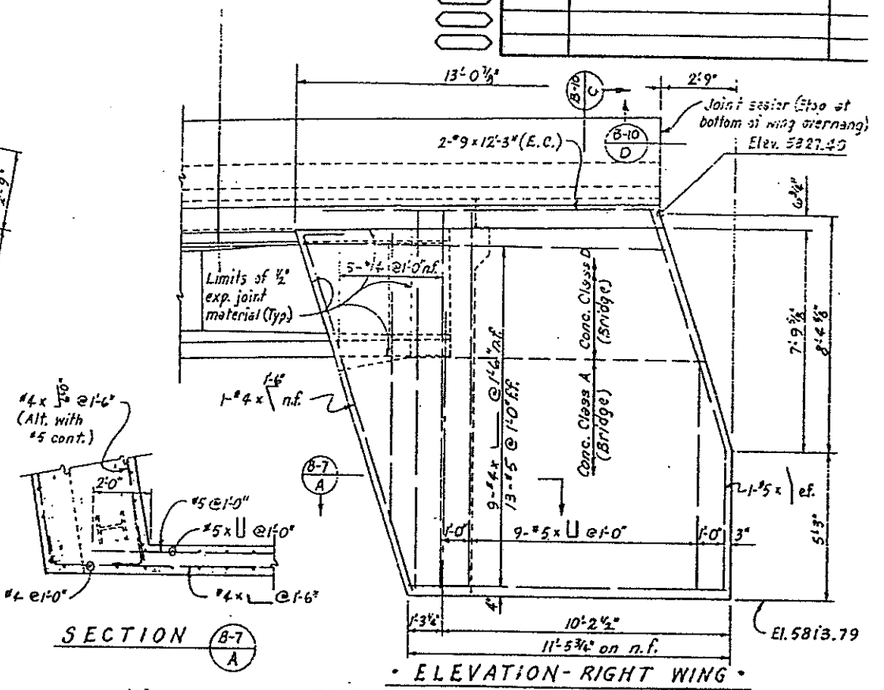

SECTION B-7 A

• ELEVATION - RIGHT WING •

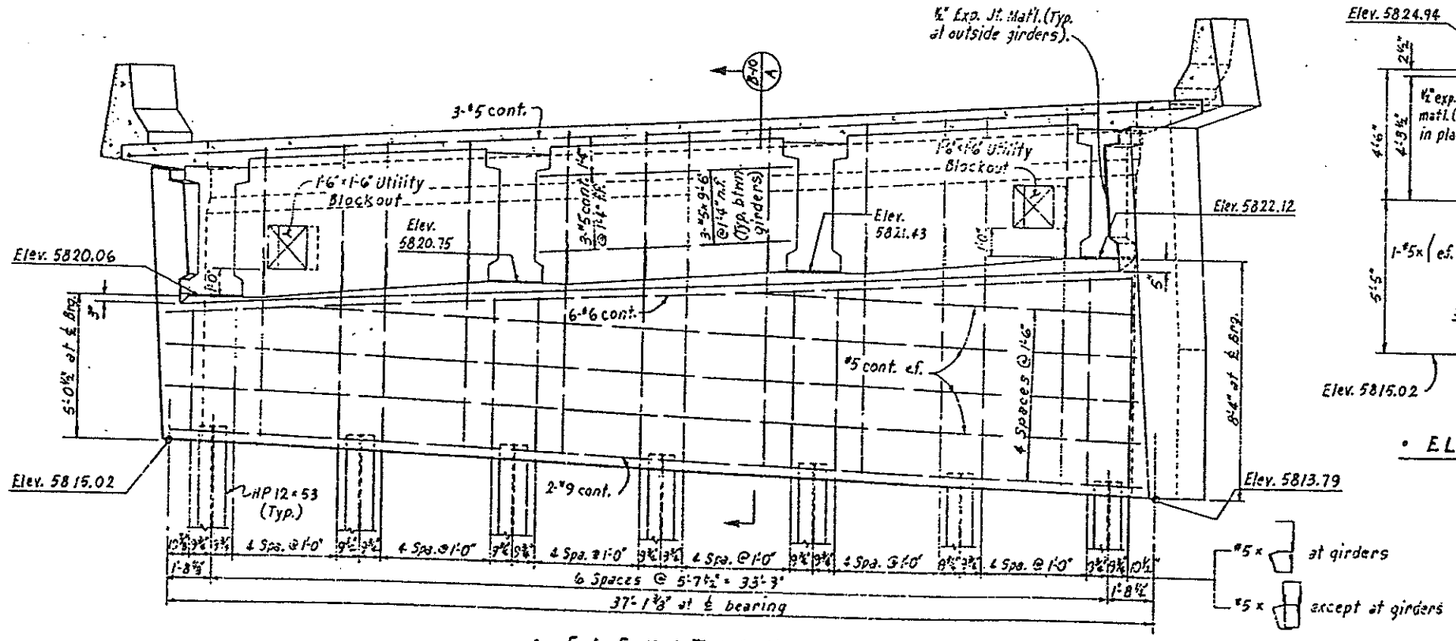

• ELEVATION •

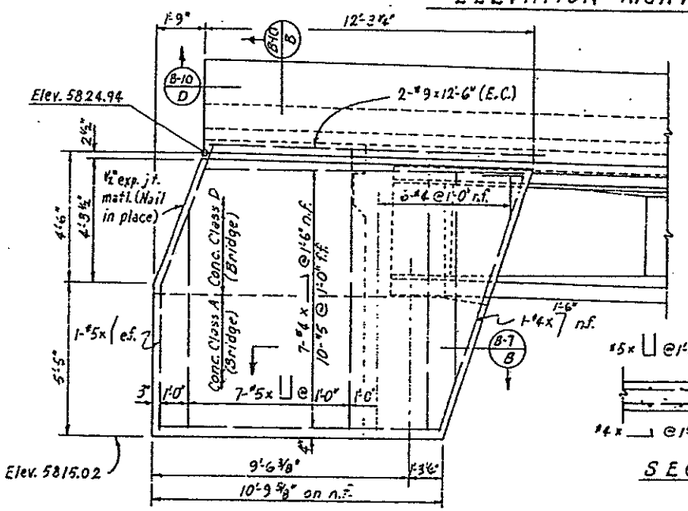

SECTION B-7 B

• ELEVATION - LEFT WING •

DIVISION OF HIGHWAYS

S.H. 470 OVER YOSEMITE STREET

ABUTMENT 3
(F-17-HL)

Designer	D. Horner	Structure Numbers	F-17-HL
Detailer	L. Keller		

STATE OF COLORADO
DEPARTMENT OF HIGHWAYS
DIVISION OF HIGHWAYS
1964 FORM NO. 117
REVISED MAR. 1972

AS CONSTRUCTED			
NO REVISIONS	8-3-54	REVISED	VOID

FEDERAL ROAD REGION NO.	DIVISION	PROJ. NO.	SHEET NO.	TOTAL SHEETS
VIII	COLORADO	IXFU 470-1(8)	28	

REVISIONS			

	DATE	CHECKED BY
INITIAL	4-52	D&H
	4-52	QUANTITIES BY
	4-52	CHECKED BY

DESIGNED BY	D&H	4-52
CHECKED BY	L.M.K.	4-52
DETAILED BY	L.M.K.	4-52

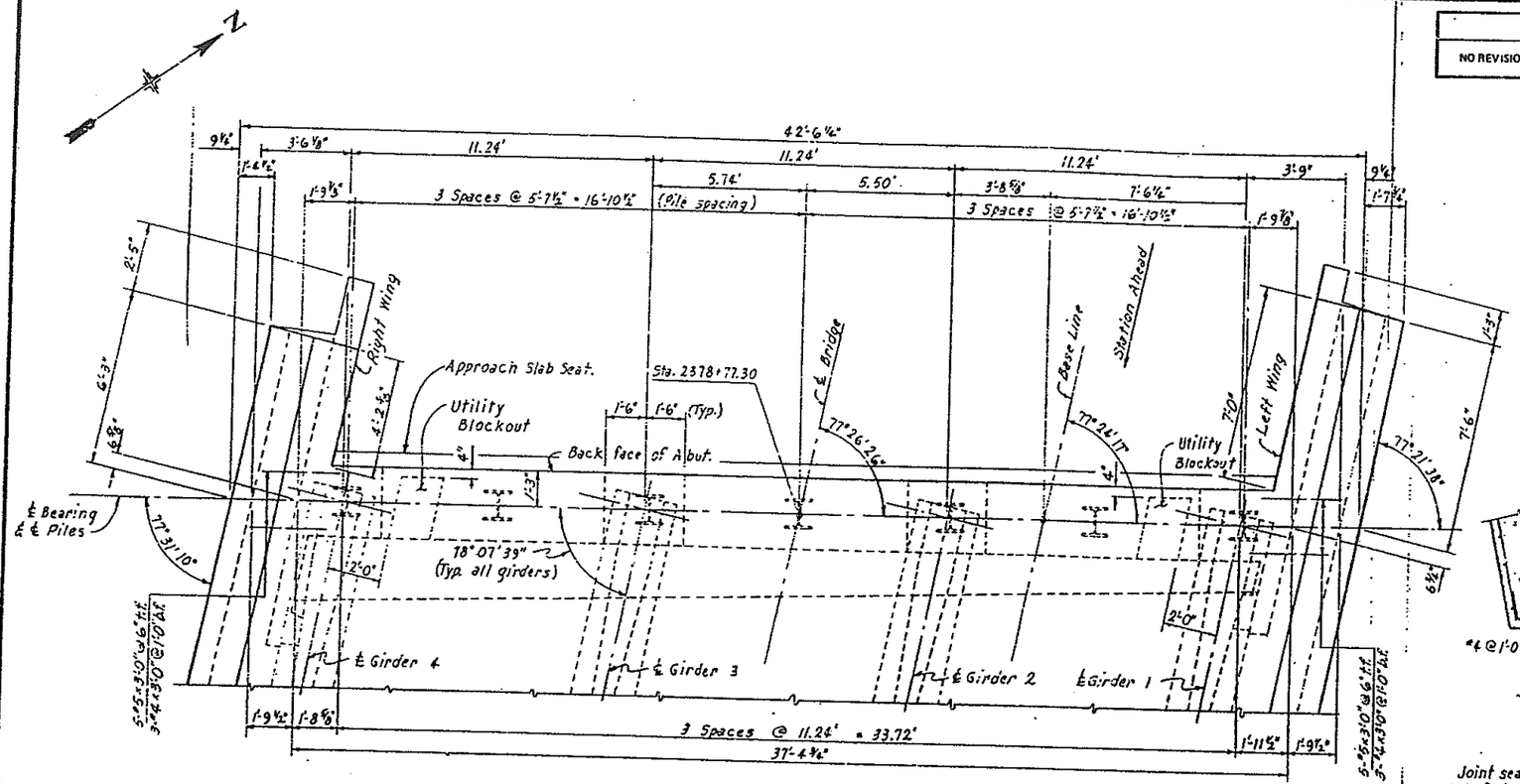

• PLAN •

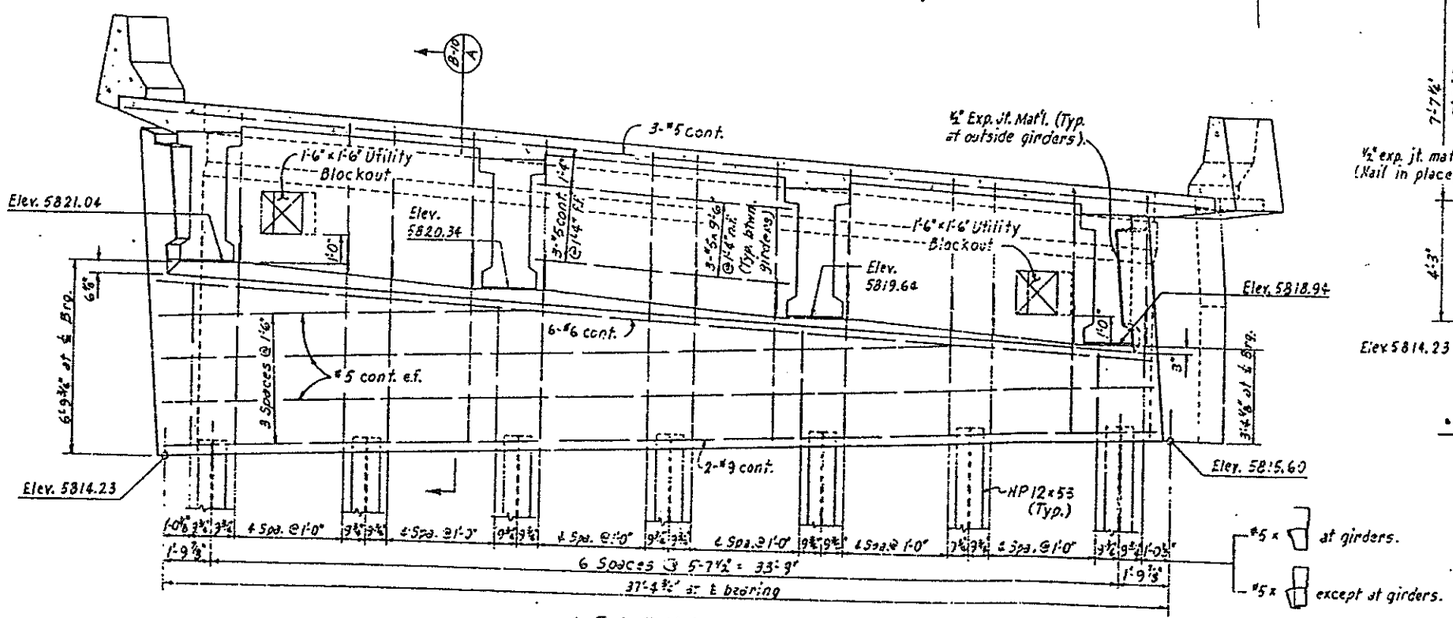

• ELEVATION •

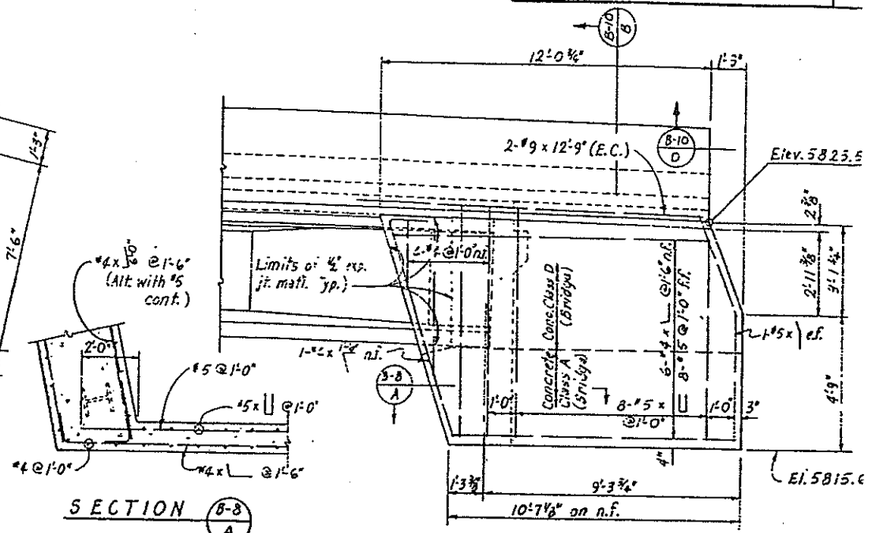

SECTION B-8 A

• ELEVATION - LEFT WING •

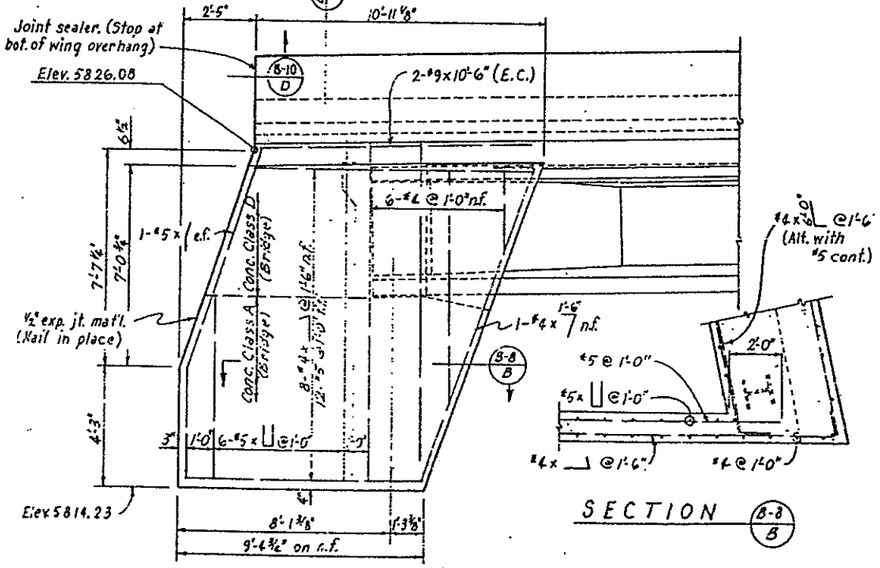

SECTION B-8 B

• ELEVATION - RIGHT WING •

DIVISION OF HIGHWAYS

S.H. 470 OVER YOSEMITE STREET

ABUTMENT 1
(F-17-HM)

Designer	D. Horner	Structure Numbers	F-17-HM
Detailer	L. Keller		

STATE OF COLORADO
DEPARTMENT OF HIGHWAYS
DIVISION OF HIGHWAYS
FORM NO. 119
REV. MAR. 1957

AS CONSTRUCTED			
NO REVISIONS		REVISED 8-7-64	VOID

FEDERAL ROAD REGION NO.	DIVISION	PROJ. NO.	SHEET NO.	TOTAL SHEETS
VIII	COLORADO	IXF[illegible] 470-1(8)	39	

REVISIONS			

	INITIAL	DATE	CHECKED
DESIGNED BY	DGH	4-62	D.G.H. 4-62
CHECKED BY	LMK	4-62	L.M.K. 4-62
DETAILED BY	LMK	4-62	D.G.H. 4-62
CHECKED BY	DGH	4-62	L.M.K. 4-62
QUANTITIES BY	LMK	4-62	D.G.H. 4-62
CHECKED BY	DGH	4-62	L.M.K. 4-62

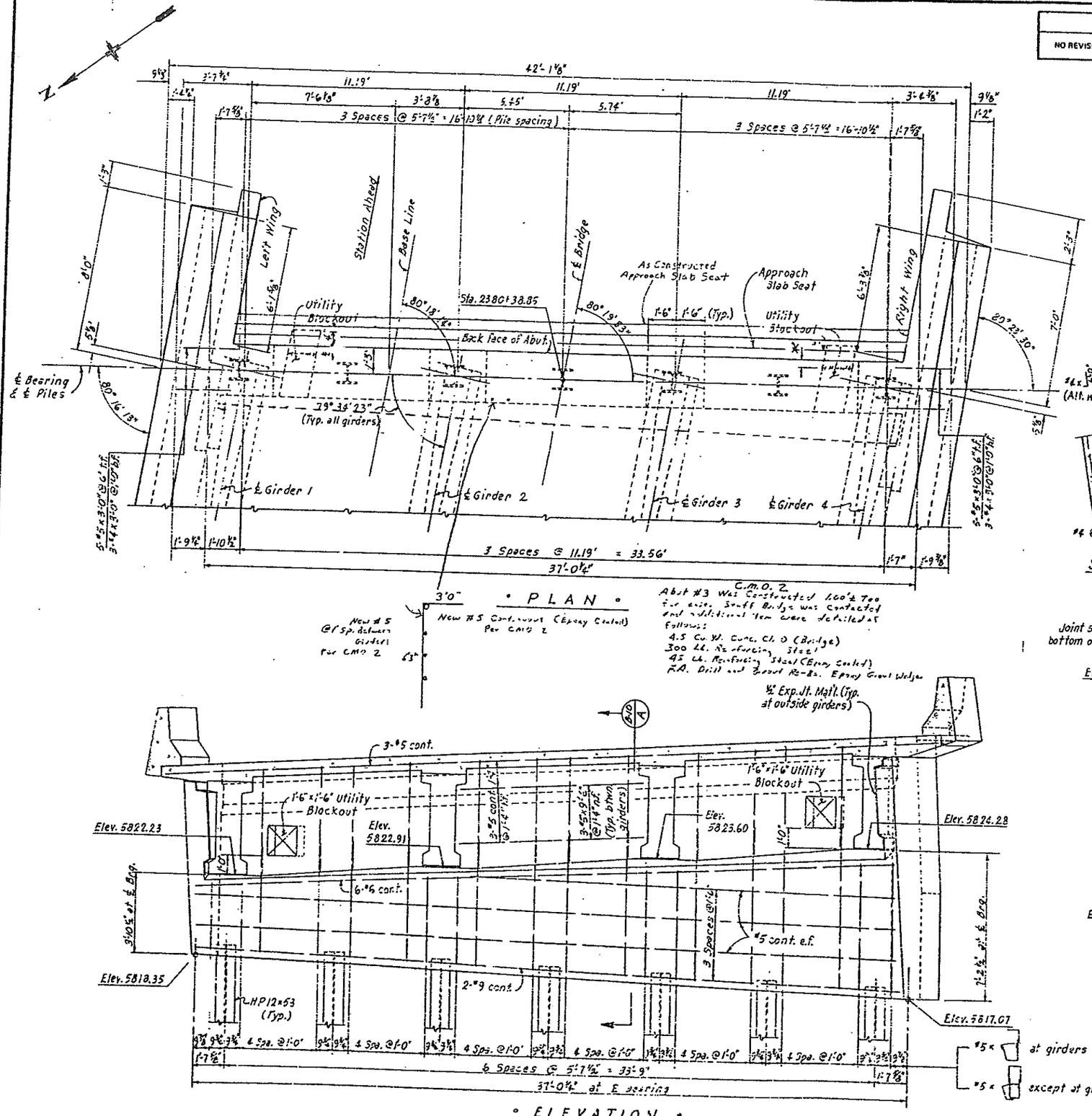

DIVISION OF HIGHWAYS

S.H. 470 OVER YOSEMITE STREET

ABUTMENT 3
(F-17-HM)

Designer	D. Horner	Structure Numbers	F-17-HM
Detailer	L. Kelley		

AS CONSTRUCTED			
NO REVISIONS		REVISED 2-9-84	VOID

FEDERAL ROAD REGION NO.	DIVISION	PROJ. NO.	SHEET NO.	TOTAL SHEETS
VIII	COLORADO	IXF U 470-1(8)	40	

REVISIONS			

	INITIAL	DATE	CHECKED BY	DATE
DESIGNED BY	D.G.H.	6-82	D.G.H.	6-82
DETAILED BY	L.M.K.	6-82	L.M.K.	6-82
CHECKED BY	L.M.K.	6-82	D.G.H.	6-82
QUANTITIES BY	L.M.K.	6-82	CHECKED BY	6-82

Transverse Slab Reinforcing

2-#10 x ⊓ E.C. (cont.) over each girder.

Longitudinal Slab Reinforcing

2'-6"

1'-3" 1'-3"

℄ Brg.

#5 x 1'-6" @ 1'-0"

#4 cont. (2 Tot.)

#6 x 3'-6" @ 1'-6" (Proj. 1'-0")

5" Joint (Epoxy coated)

4"x4" Fillet

#5 x 6'-6" between girders

#5 cont. (2 Tot.)

2'-0" at girders 1'-0"

2" Cl.

#5 x ⊓ between girders

#5 x 1'-10" 1'-0" (4 reqd. ea. Abut.)

#8 x 6'-0" thru each girder

Utility blockout. (Cut vert. & longitudinal bars as reqd.)

#5 cont. (Total 3)

4"

5"

10" x ½" x 1'-10" Elastomeric Bearing Pad at each girder

Varies (See Dwg. 5 of 7)

#6 cont.

2" Cl.

2" Cl.

1'-5" min.

½" Expansion joint material under girder flange (ahead of bearing pad).

#5 x ⊔ at girders

#5 cont. (See Abut. Drawings for number reqd)

#9 cont.

#5 x ⊔ between girders

1'-5" min.

3" Cl.

1'-3" 1'-3" 2'-6"

HP12 x 53

Varies

Concrete Class D (Bridge)

3'-5½" at ℄ each girder

Concrete Class A (Bridge)

Varies (See Abutment Drawings)

SECTION B-6 A, B-7 A, B-8 A, B-9 A

Revision Per C.M.O. 2
Abut. 3 F-17-HM Only

3'-0"

New #5 continuous (Epoxy Coated)

New #5 15" spacing between Exp. Joint

6"

Moved From Inside Edge

℄ Girder

α (See table)

℄ Bearing

11" 11"

Back face of Abut.

1'-3"

1'-3"

5'-5"

e

½" Expansion Joint Material

10" x ½" x 1'-10" Elastomeric Pad.

• PLAN AT BEARINGS •

Note: Portion of Abutment and slab above bearing Seat to be pour monolithically.

2'-9"

1'-0" 1'-9"

#5 cont. (E.C.)

#5 x 2'-5" 2'-5" @ 6" (E.C.)

Slope :-0.059 ½

a

6"

b

#5 cont.

#4 x 2'-5" 1'-9" @ 1'-0"

9" 1'-9" 1'-0"

2-#9 (E.C.) (See Wing Details)

#4 x ⊔ @ 1'-6"

2"Cl.

#5 @ 1'-0"

2" Cl.

#5 x ⊔ @ 1'-0"

3" Cl.

SECTION B-6 B, B-7 B, B-8 B, B-9 B

Note: (E.C.) indicates epoxy coated reinf. bars.

2'-9"

1'-9" 1'-0"

For details and reinforcing of Bridge Rail, See Dwg. B-13.

#5 x 2'-5" 2'-5" @ 6" (E.C.)

Slope :-0.059 ½

#5 cont. (E.C.)

c

d

2-#9 (E.C.) (See Wing Details)

#5 cont.

#4 x 2'-5" 1'-9" @ 1'-0"

1'-0" 1'-9" 9"

#5 @ 1'-0"

#4 x ⊔ @ 1'-6"

2" Cl.

2" Cl.

#5 x ⊔ @ 1'-0"

3" Cl.

SECTION B-6 C, B-7 C, B-8 C, B-9 C

2" 7" 6" 6"

Compression Joint Sealer. (Stop at bottom of wing overhang.)

1'-7"

10"

5"

6"

2" Bituminous Pavement (Future)

Break line at end of wing

Varies

a or c (See Table)

b or d

• VIEW AT END OF WING •

1¼"

2"x2" Bridge compression joint sealer, Grade P072.

2⅛"

½"

½"

¾"

SECTION B-10 D

TABLE OF DIMENSIONS				
Dim.	Str. F-17-HL		Str. F-17-HM	
	Abut. 1	Abut. 3	Abut. 1	Abut. 3
a	1"	1 7/16"	1"	1 7/16"
b	2 3/8"	2½"	2 3/8"	2½"
c	2 1/16"	2 7/8"	2 1/16"	2 5/16"
d	6 5/8"	6 7/16"	6½"	6 13/16"
* e	10 3/8"	10 5/16"	10 5/16"	10 1/16"
* α	77°25'03"	78°49'11"	78°07'39"	79°34'23"

* See 'Plan at Bearings'.

DIVISION OF HIGHWAYS

S.H. 470 OVER YOSEMITE STREET

ABUTMENT DETAILS

Designer	D. Horner	Structure Numbers	F-17-HL F-17-HM
Detailer	L. Keller		

DIVISION OF HIGHWAYS
STATE PROJECT NO. 117
REV. MAR. 1972

	DATE	CHECKED BY	
INITIAL	4-82	L.M.K.	4-82
DESIGNED BY D.G.H.	4-82	L.M.K.	4-82
DRAWN BY D.L.D.	4-82	QUANTITIES BY D.G.H.	4-82
DETAILED BY D.L.D.	4-82	CHECKED BY D.L.D.	4-82

AS CONSTRUCTED			
NO REVISIONS	8-3-84	REVISED	VOID

FEDERAL ROAD REGION NO.	DIVISION	PROJ. NO.	SHEET NO.	TOTAL SHEETS
VIII	COLORADO	IXFU 470-1(8)	41	

REVISIONS			

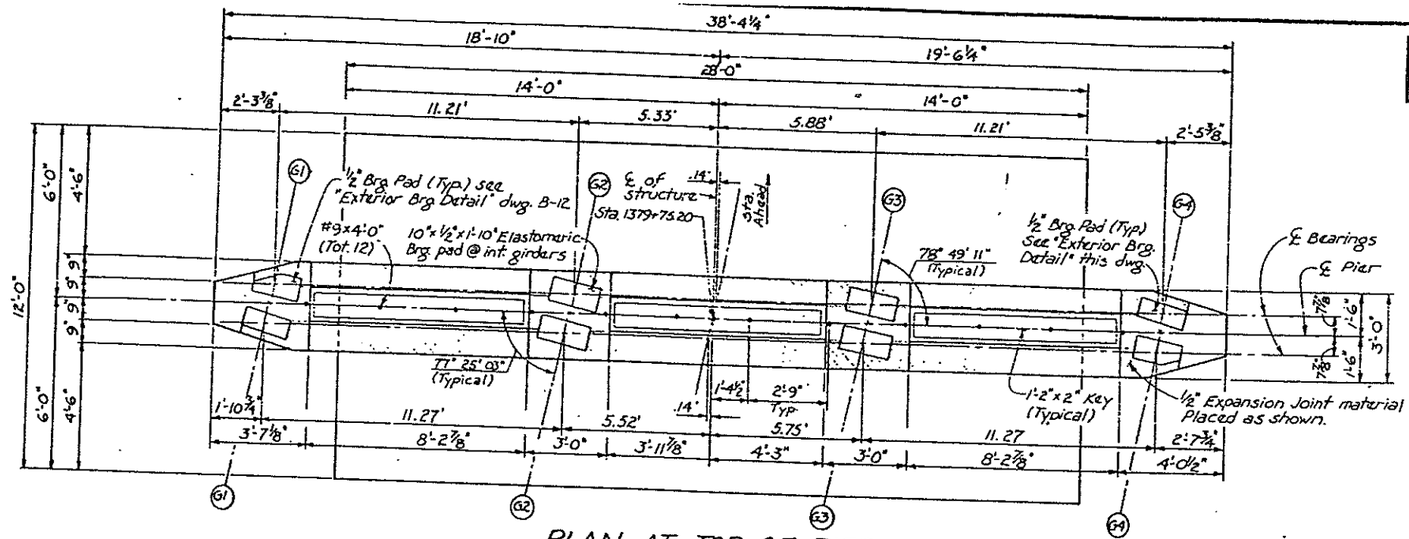

PLAN AT TOP OF PIER

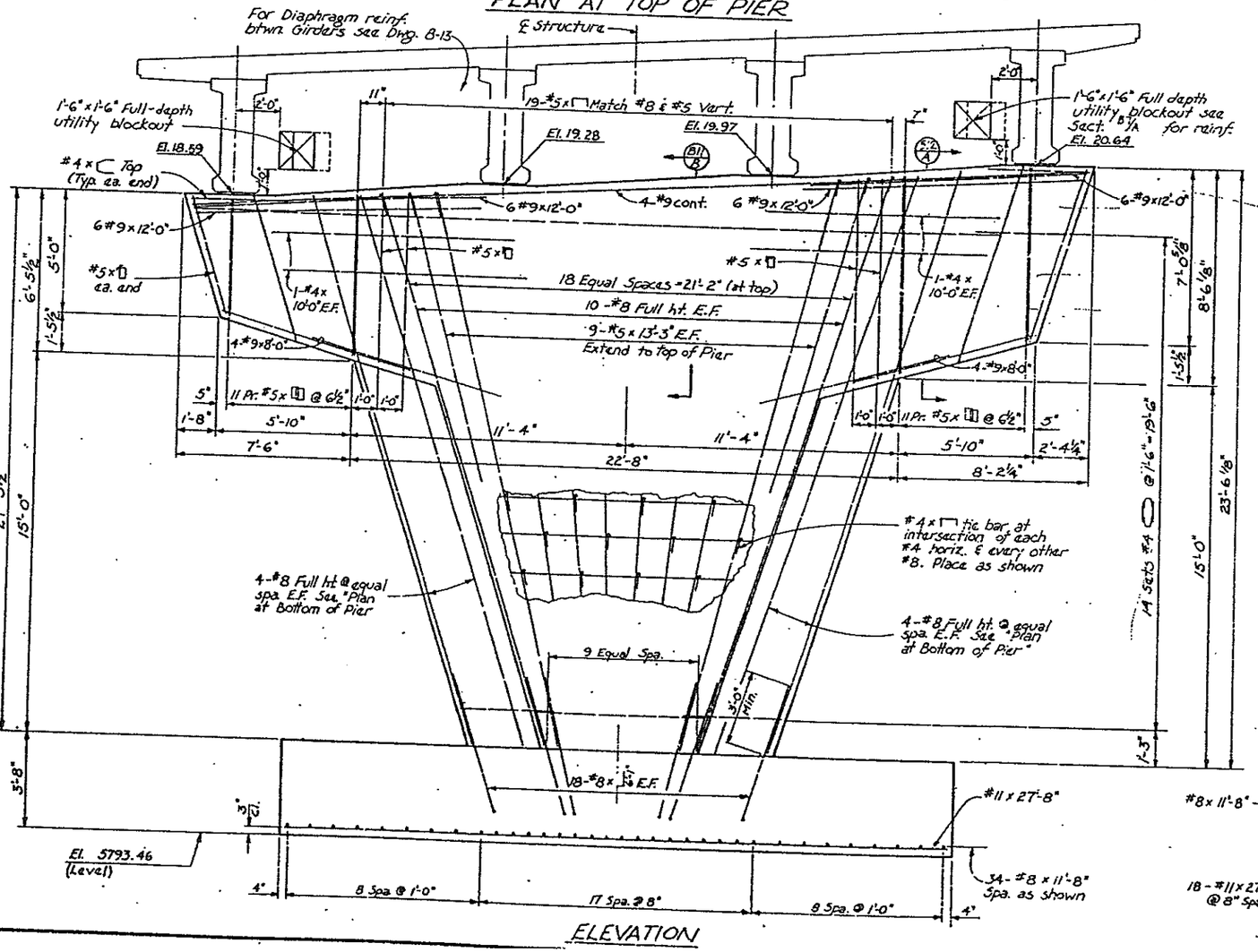

ELEVATION

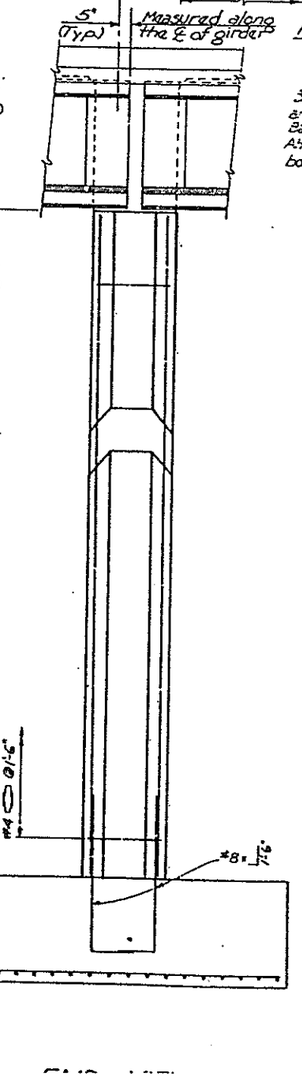

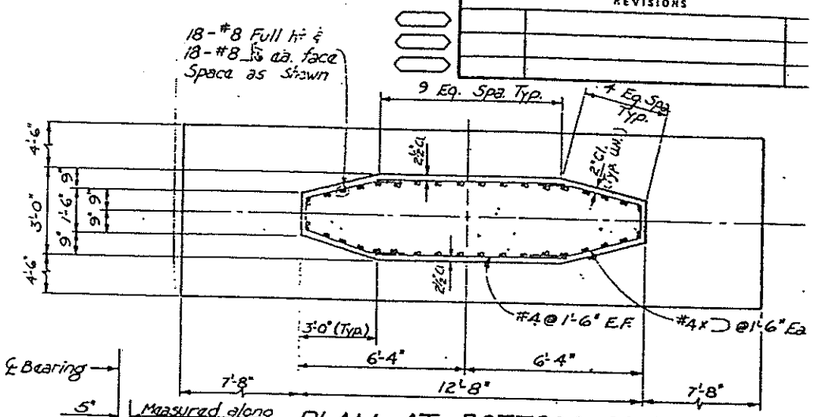

PLAN AT BOTTOM OF PIER

Note
Brg. Pad dimensions are typ. for G1 Back Sta. & G4 Ahead Sta. at both structures

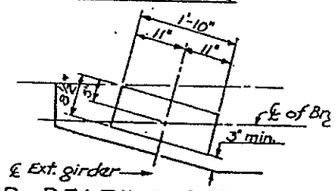

EXTERIOR BEARING DETAIL

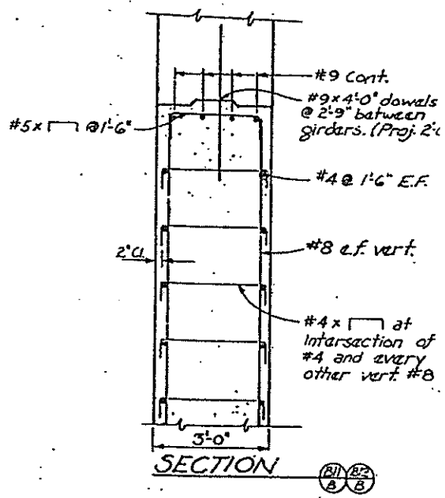

SECTION

DIVISION OF HIGHWAYS		
S.H. 470 OVER YOSEMITE STREET		
PIER 2 (F-17-HL)		
Designer D. Horner	Structure Numbers	F-17-HL
Detailer D. Daugherty		

DIVISION OF HIGHWAYS
STATE OF COLORADO
DEPT. PUBLIC WKS.

AS CONSTRUCTED			
NO REVISIONS	8-7-84	REVISED	VOID

FEDERAL ROAD REGION NO.	DIVISION	PROJ. NO.	SHEET NO.	TOTAL SHEETS
VIII	COLORADO	IXFU 470-1(8)	42	

REVISIONS			

INITIAL	DATE	CHECKED BY	DATE	CHECKED BY	DATE
DESIGNED BY	DGH	4-83	LAK	4-83	LAK 4-83
CHECKED BY	LAK	4-84	QUANTITIES BY		DRH 4-83
DETAILED BY	DLD	2-84	CHECKED BY		

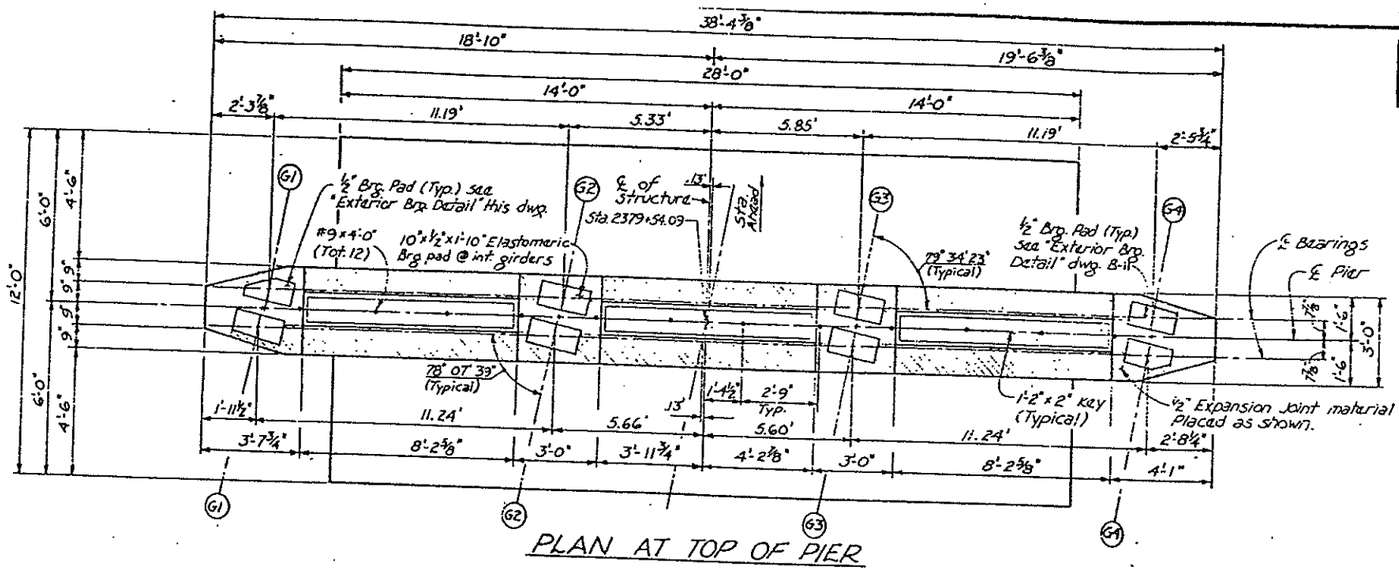

PLAN AT TOP OF PIER

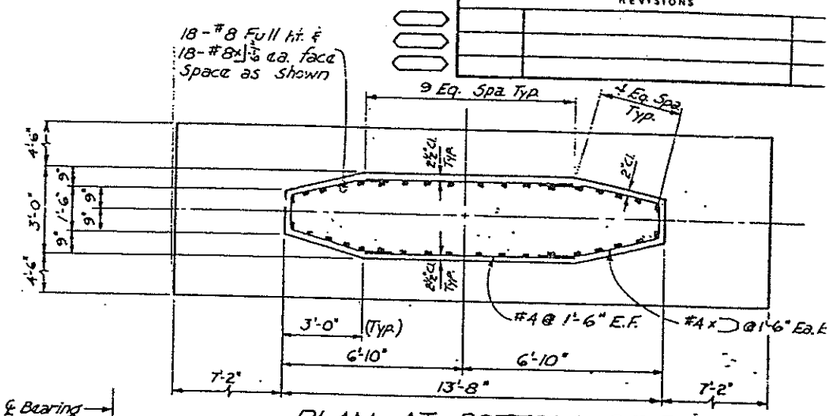

PLAN AT BOTTOM OF PIER

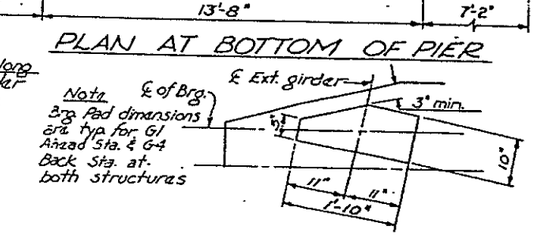

EXTERIOR BEARING DETAIL

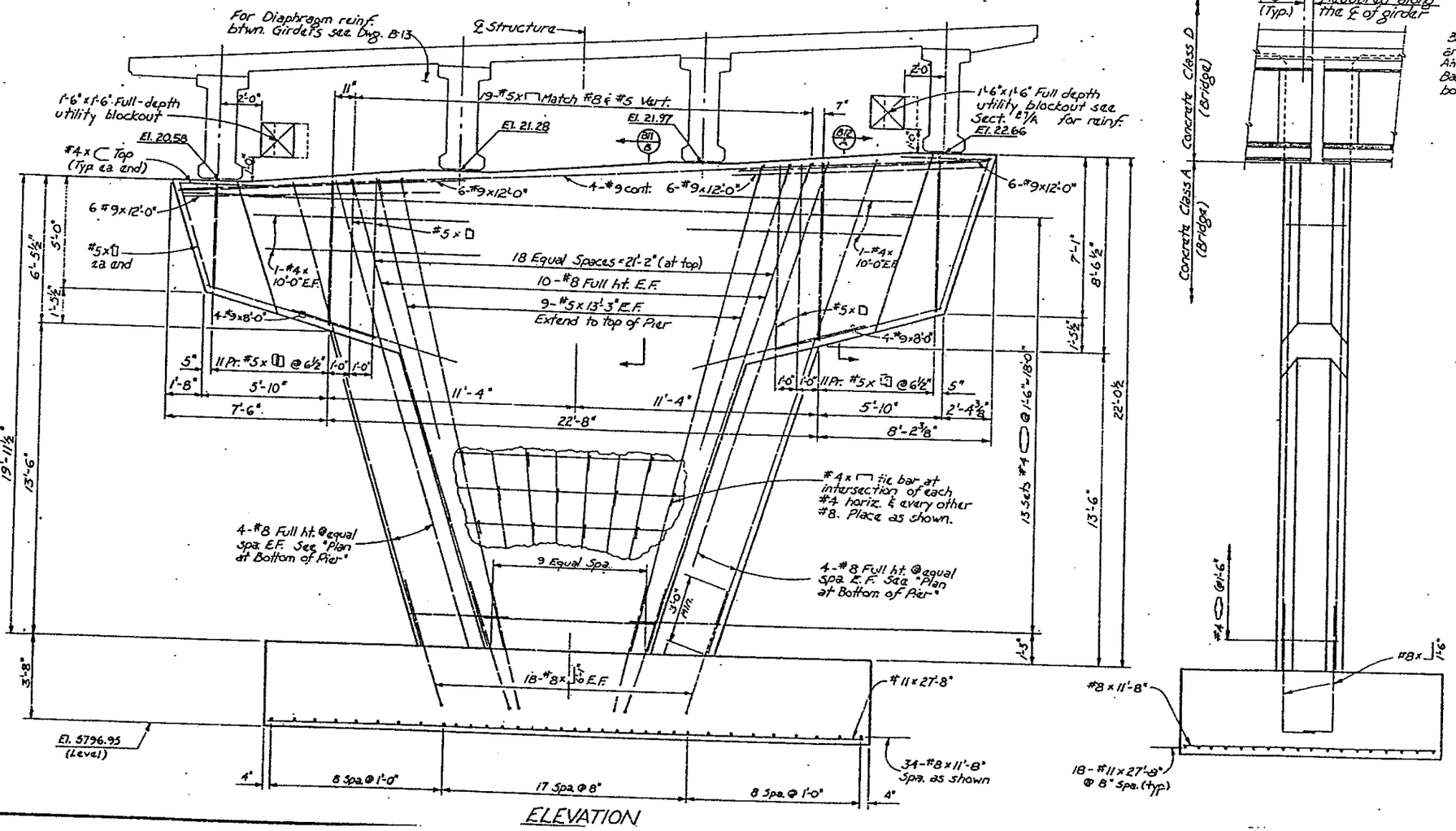

ELEVATION

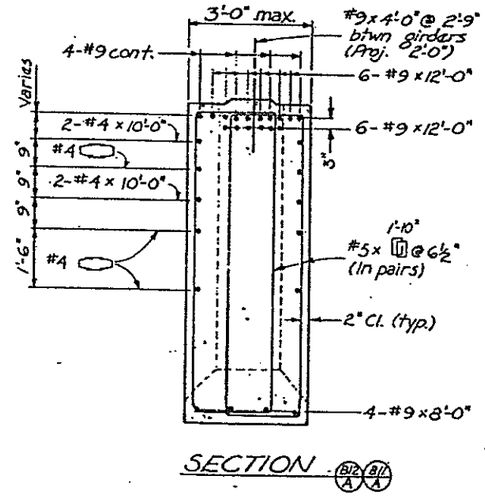

SECTION B12/A B11/A

DIVISION OF HIGHWAYS

S.H. 470 OVER YOSEMITE STREET

PIER 2 (F-17-HM)

Designer	D. Horner	Structure Numbers	F-17-HM
Detailer	D. Doughert		

DEPARTMENT OF HIGHWAYS
DIVISION OF HIGHWAYS
FORM NO. 117
REV. MAR. 1971

	INITIAL	DATE
DESIGNED BY	A.M.	4-82
CHECKED BY	L.K.	5-82
QUANTITIES BY	D.H.	6-82
CHECKED BY		
DETAILED BY		
CHECKED BY		

AS CONSTRUCTED			
NO REVISIONS	9-3-84	REVISED	VOID

FEDERAL ROAD REGION NO.	DIVISION	PROJ. NO.	SHEET NO	TOTAL SHEETS
VIII	COLORADO	IXFU 470-1(8)	43	

REVISIONS		

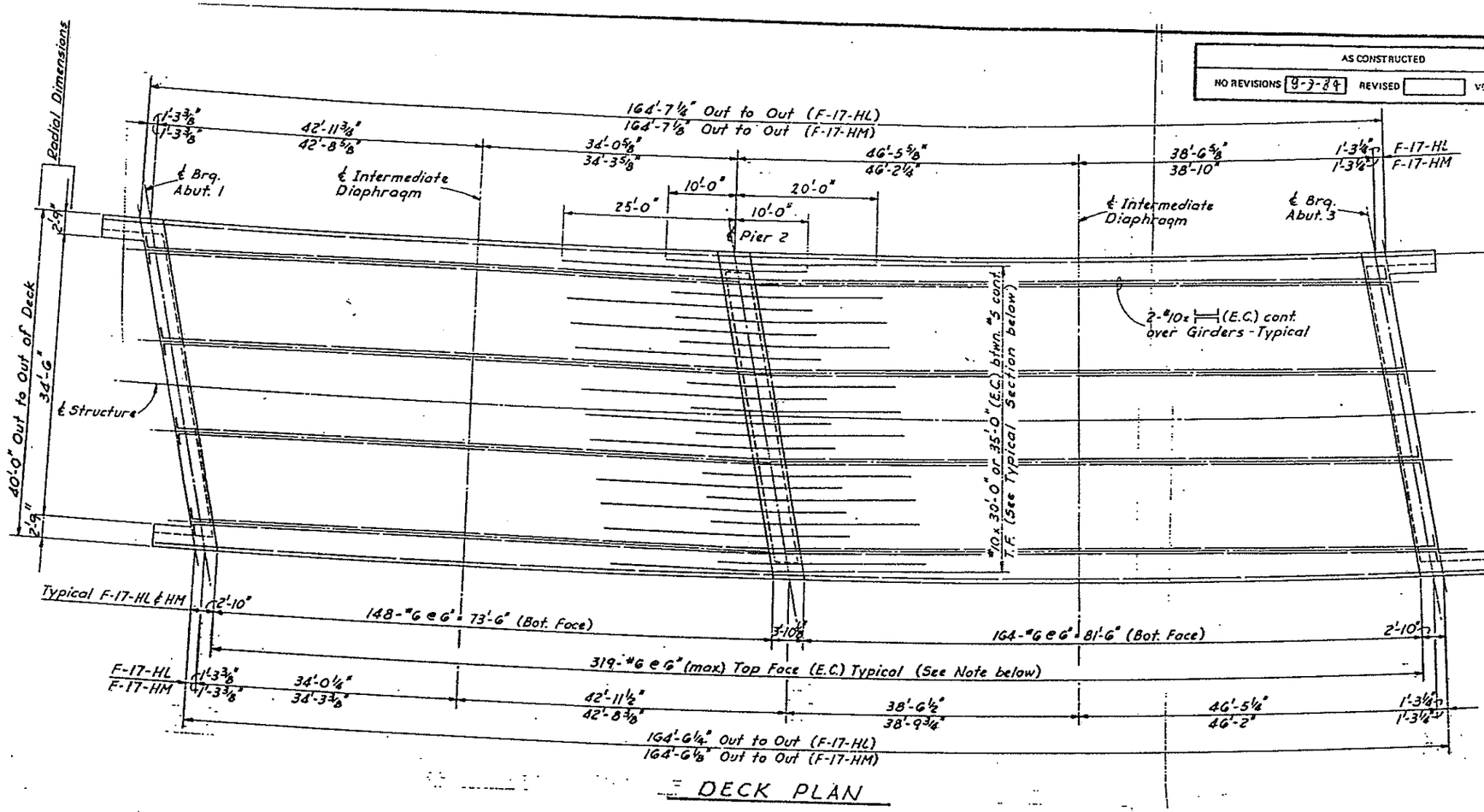

DECK PLAN

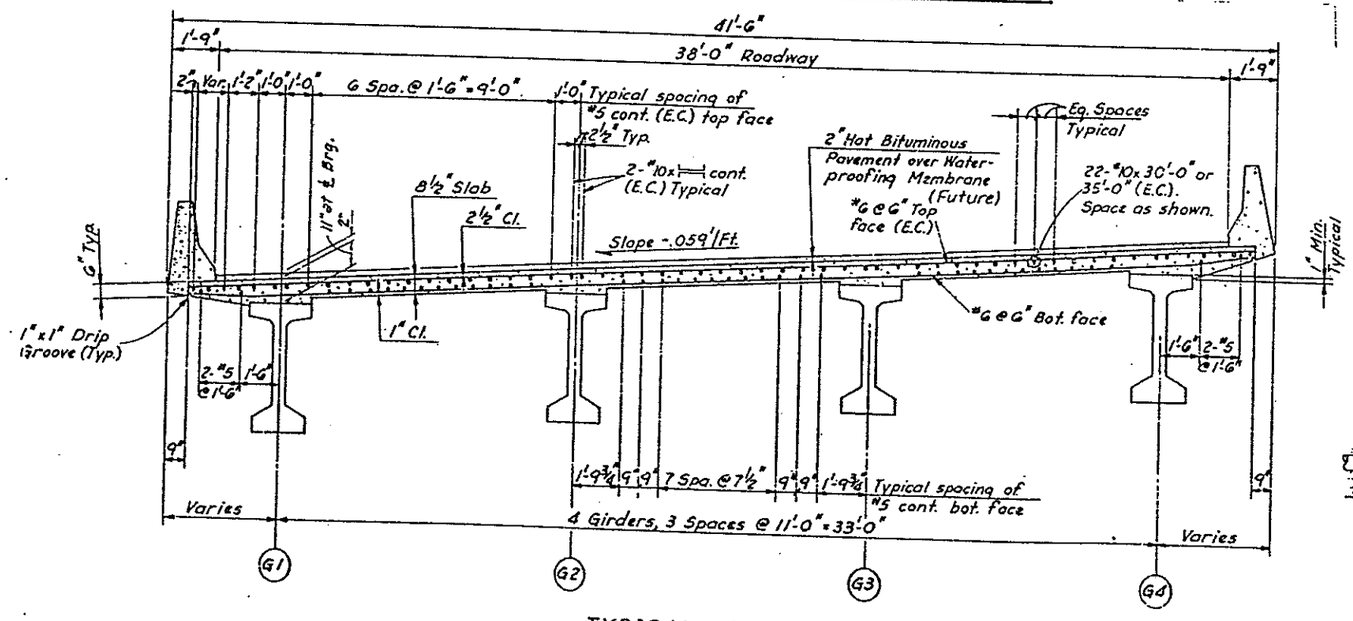

TYPICAL SECTION

NOTES:

(E.C.) Indicates epoxy coated reinforcing bars. Included in Bid Item 602, Reinforcing Steel (Epoxy Coated).

Decks may be formed using permanent steel bridge deck forms. See Special Provisions.

Top face transverse bars to be continuous from edge to edge of Deck.

Note: Portion of Pier Cap slab above bearing seat to be poured monolithically.

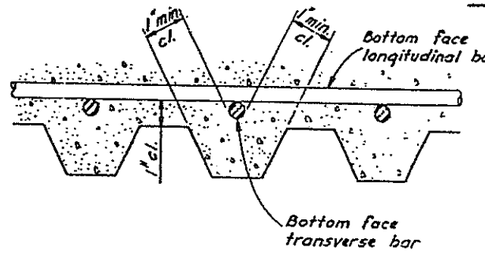

STAY-IN-PLACE FORM DETAIL

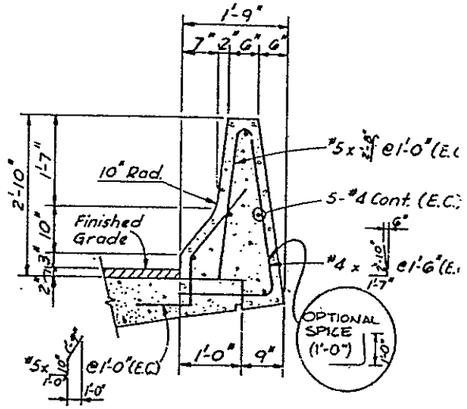

SECTION THRU BRIDGE RAIL

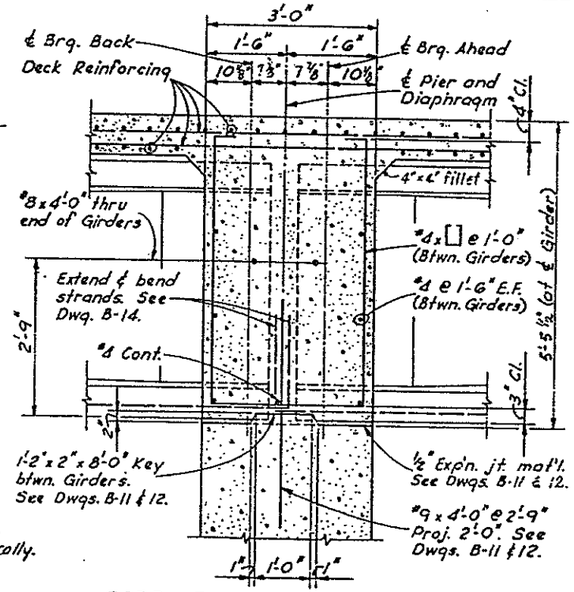

PIER DIAPHRAGM DETAIL

DIVISION OF HIGHWAYS

S.H. 470 OVER YOSEMITE STREET

SUPERSTRUCTURE DETAILS

Designer	F. Ameri	Structure Numbers	F-17-HL
Detailer	D. Griner		F-17-HM

AS CONSTRUCTED				
NO REVISION	8-7-84	REVISED		VOID

FEDERAL ROAD REGION NO.	DIVISION	PROJ. NO.	SHEET NO.	TOTAL SHEETS
VIII	COLORADO	IXFU 470-1(8)	44	

REVISIONS		

BRIDGE STANDARD 61

	INITIAL	DATE
DESIGNED BY	DGH	4-82
CHECKED BY	LMK	
QUANTITIES BY	WRH	11/76
DETAILED BY		
CHECKED BY		

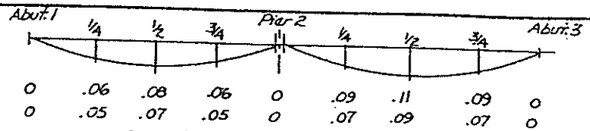

Int. Girder	0	.06	.08	.06	0	.09	.11	.09	0	
Ext. Girder	0	.05	.07	.05	0	.07	.09	.07	0	

Span 1 Span 2

DEAD LOAD DEFLECTION (FEET)

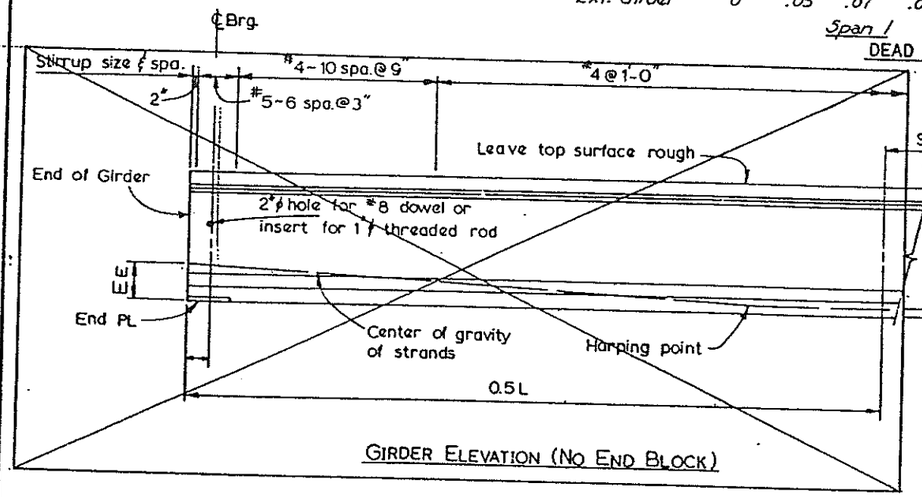

GIRDER ELEVATION (NO END BLOCK)

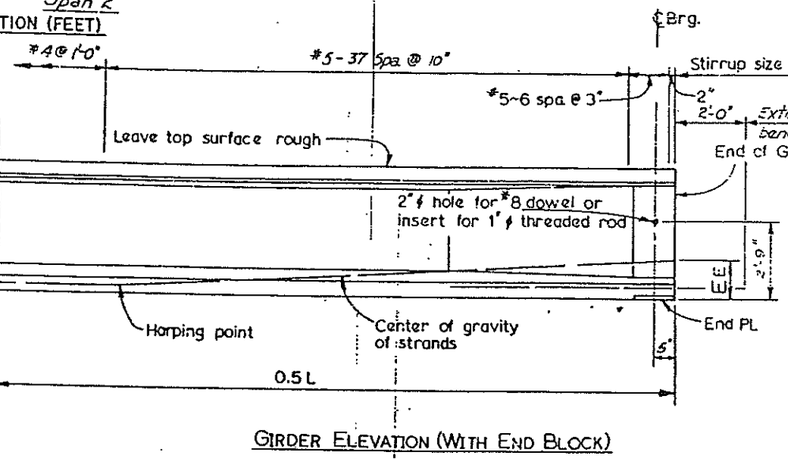

GIRDER ELEVATION (WITH END BLOCK)

GENERAL NOTES

ALL WORK NECESSARY TO FABRICATE AND INSTALL THE INTEGRAL PARTS OF THE GIRDER (INCLUDING THE 1" ∮ x 1'-6" THREADED RODS AND ELASTOMERIC BEARING PADS) AS SHOWN ON THE PLANS SHALL BE INCLUDED IN THE BID PRICE FOR ITEM NO. 613, PRESTRESSED CONCRETE UNIT.

A MINIMUM OF TACK WELDING OF REINFORCING STEEL MAY BE PERMITTED WHEN APPROVED BY THE ENGINEER.

USE 1/2" MINIMUM CHAMFER ON ALL CORNERS, EXCEPT AS NOTED.

A MINIMUM OF TWO HARPING POINTS SHALL BE USED PER GIRDER.

CUT ALL STRANDS FLUSH WITH THE GIRDER ENDS UNLESS OTHERWISE NOTED. THE EXPOSED ENDS OF STRANDS AND A 1" STRIP OF ADJOINING CONCRETE SHALL BE CLEANED AND PAINTED WITH AN APPROVED WATER-PROOFING COMPOUND.

USE 1/2" ∮ STRANDS f_s^1 = 270 KSI (STRESS-RELIEVED). ALTERNATE STRANDS ARE LOW-RELAXATION STRANDS MEETING THE REQUIREMENTS OF ASTM-A416-68 GRADE 270.

IF LOW-RELAXATION STRANDS ARE USED, THE NET COMPRESSIVE STRESS IN THE CONCRETE AFTER ALL LOSSES SHALL BE AT LEAST AS LARGE AS THAT PROVIDED BY THE STRESS-RELIEVED STRANDS. ALSO THE ULTIMATE STRENGTH OF THE STRUCTURE WITH THE LOW-RELAXATION STRANDS SHALL MEET THE REQUIREMENTS OF THE APPLICABLE AASHTO SPECIFICATIONS.

INITIAL PRESTRESS FORCE: THE JACKING FORCE PER GIRDER INCLUDING ALL LOSSES F_i = .77 $x f_s^1 \times A_s^1$

FINAL PRESTRESS FORCE: THE FORCE REMAINING PER GIRDER AFTER ALL LOSSES F_f = .56 $x f_s^1 \times A_s^1$

A_s^1 = AREA OF PRESTRESSING STEEL

f_s^1 = ULTIMATE STRENGTH OF PRESTRESSING STEEL

CONCRETE STRENGTH: f_{ci}^1 — IS AT TIME OF RELEASE OF PRESTRESS FORCE.

f_c^1 — IS AT 28 DAYS.

CLEARANCE:
1. THE MINIMUM DISTANCE BETWEEN GROUPS OR INDIVIDUAL STRANDS IS 1-3/4" (MEASURED BETWEEN CENTERS OF ADJACENT STRANDS)
2. MINIMUM CONCRETE COVER FOR PRESTRESSING STEEL IS 1-1/2".

END BLOCKS WILL BE USED ON ALL GIRDERS UNLESS OTHERWISE NOTED.

△ DEFLECTION AT CENTERLINE OF SPAN DUE TO CAST-IN-PLACE SLAB.

@ END PL (NO END BLOCK)

@ MID SPAN

@ END PL (WITH END BLOCK)

TYPICAL GIRDER SECTIONS

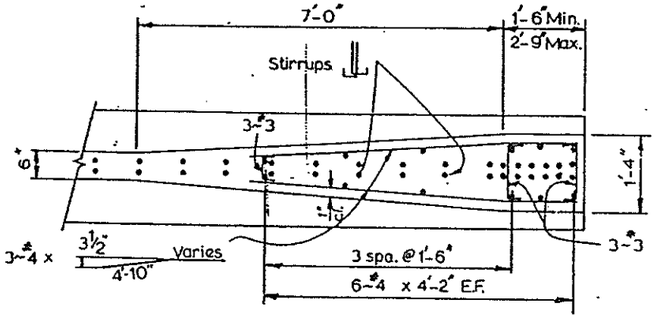

SECTION THRU END BLOCK

GIRDER SCHEDULE									
Span No.	No. of Girders	L (Feet)	EMS (Inch)	EE (Inch)	F_i (KIPS)	F_f (KIPS)	Concrete Strength f'_{ci} (PSI)	Concrete Strength f'_c (PSI)	See Note △ (Inch)
1	8	77'-2"	4.5	15	890	653	4000	5000	1.00
2	8	85'-2"	4.5	15	1135	801	4950	5000	1.36

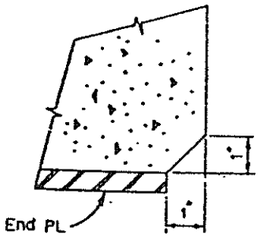

BEVEL DETAIL @ end PL only

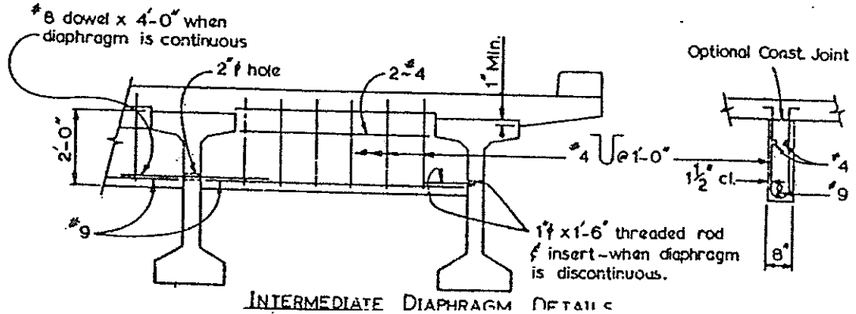

INTERMEDIATE DIAPHRAGM DETAILS

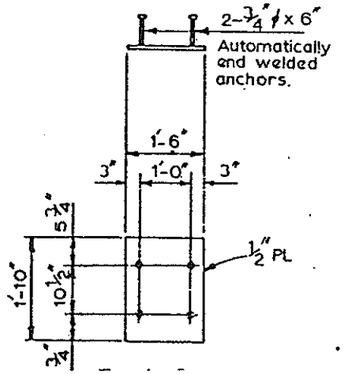

DIVISION OF HIGHWAYS

S.H. 470 OVER YOSEMITE STREET

COLORADO G54 GIRDER

Designed D. Horner Structural

STATE OF COLORADO
DEPARTMENT OF HIGHWAYS
DIVISION OF HIGHWAYS
FORM NO. 111
REV. MAR. 1977

AS CONSTRUCTED			
NO REVISIONS 9-7-84	REVISED	VOID	

FEDERAL ROAD REG-ON NO.	DIVISION	PROJ. NO.	SHEET NO.	TOTAL SHEETS
VIII	COLORADO	IXFU-470-1(8)	45	

REVISIONS		

INITIAL	DATE	CHECKED BY
DESIGNED BY D.G.H.	4-82	
CHECKED BY L.M.K.	4-82	QUANTITIES BY
DETAILED BY L.M.K.	4-82	CHECKED BY

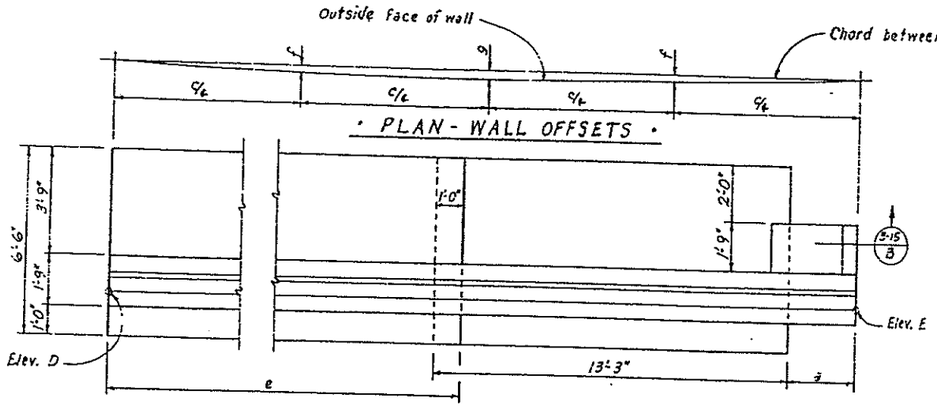

• PLAN - ABUTMENT 1 •
(Right Rail)

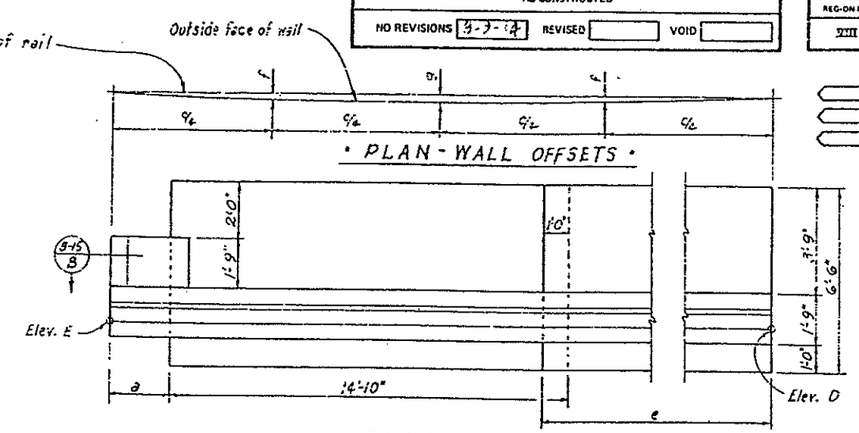

• PLAN - ABUTMENT 3 •
(Right Rail)

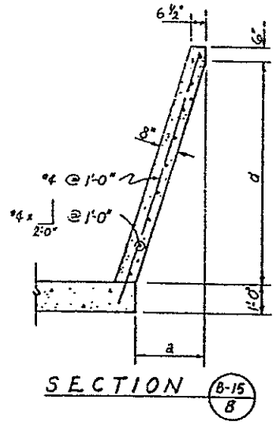

SECTION B-15 B

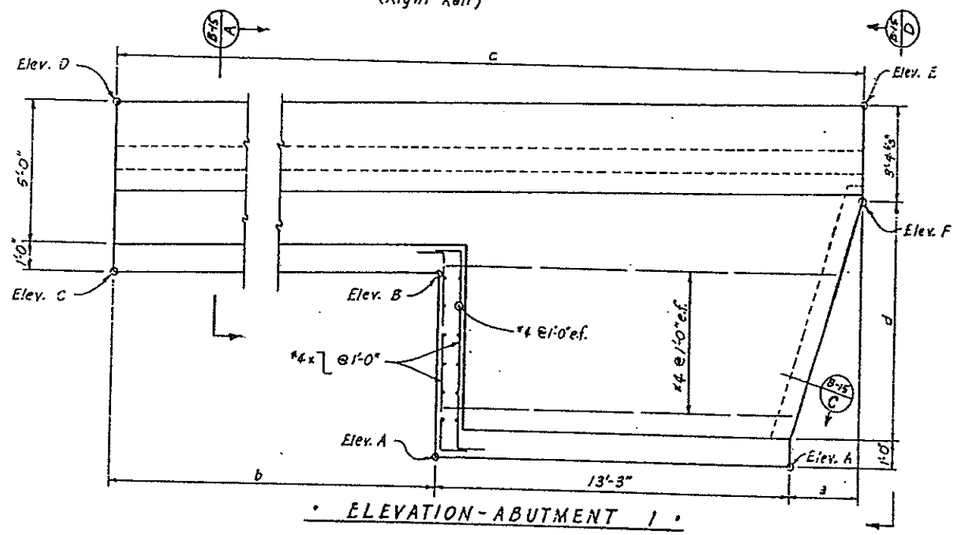

• ELEVATION - ABUTMENT 1 •

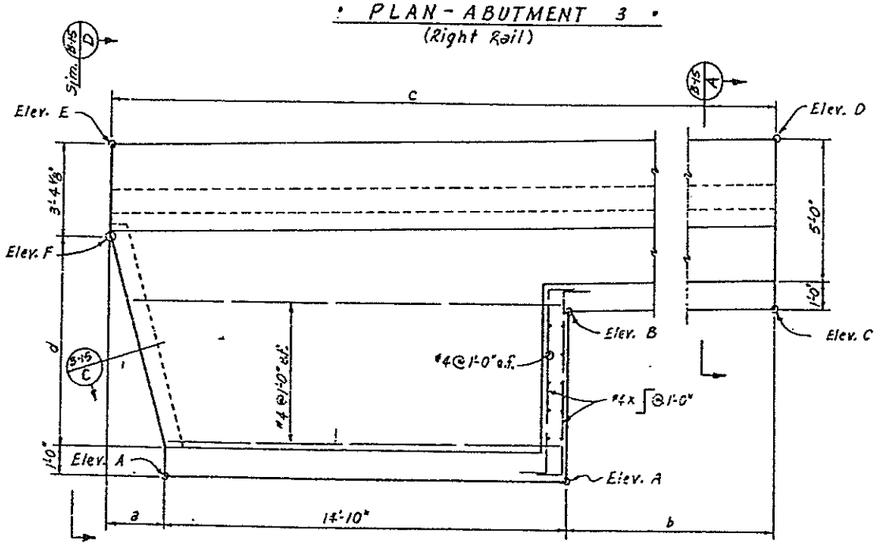

• ELEVATION - ABUTMENT 3 •

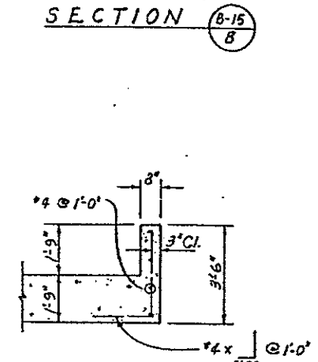

SECTION B-15 C

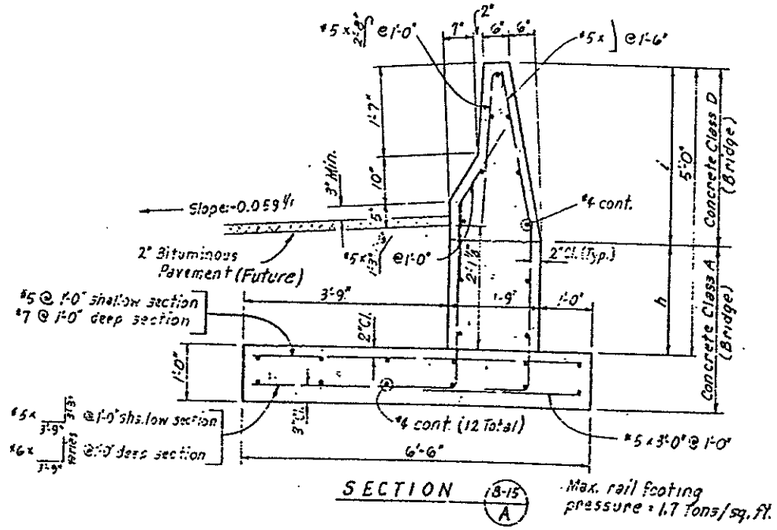

SECTION B-15 A

Max. rail footing pressure = 1.7 tons/sq. ft.

TABLE OF ELEVATIONS AND DIMENSIONS

Point or Dim.	STR. NO. F-17-HL		STR. NO. F-17-HM	
	Abut. 1 (Rt. Rail)	Abut. 3 (Rt. Rail)	Abut. 1 (Rt. Rail)	Abut. 3 (Rt. Rail)
A	5815.90	5818.04	5817.48	5821.24
B	21.48	25.05	23.09	27.20
C	21.12	25.41	22.69	27.57
D	27.12	31.41	28.69	33.57
E	27.75	30.75	29.43	32.91
F	24.41	27.40	26.08	29.87
a	2'-8"	2'-9"	2'-5"	2'-3"
b	21'-1"	21'-5"	18'-4"	20'-11"
c	37'-0"	39'-0"	34'-0"	38'-0"
d	3'-5"	3'-4⅜"	7'-7½"	7'-4"
e	22'-1"	22'-5"	19'-4"	22'-11"
f	½"	9/16"	7/16"	½"
g	5/8"	¾"	11/16"	13/16"
h	1'-10⅝"	1'-10¾"	1'-10⅝"	1'-10¾"
i	3'-1⅜"	3'-1½"	3'-1⅜"	3'-1½"

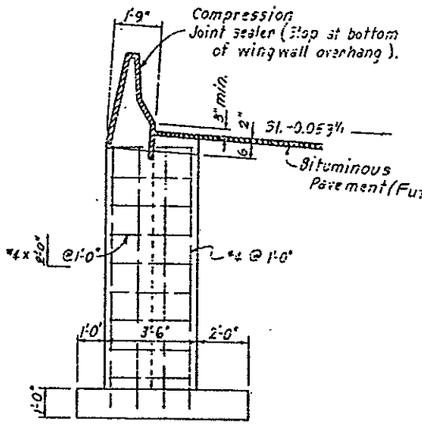

SECTION B-15 D

DIVISION OF HIGHWAYS

S.H. 470 OVER YOSEMITE STREET

RAIL DETAILS
(Right Rails)

Designer	D. Horner	Structure Numbers	F-17-HL
Detailer	L. Keller		F-17-HM

STATE OF COLORADO
DEPARTMENT OF HIGHWAYS
DIVISION OF HIGHWAYS
STD. PLAN NO. 119
REV. MAR., 1972

AS CONSTRUCTED			
NO REVISIONS	4-3-84	REVISED	VOID

FEDERAL ROAD REGION NO.	DIVISION	PROJ. NO.	SHEET NO.	TOTAL SHEETS
VIII	COLORADO	IXFU-470-1(8)	46	

REVISIONS			

	INITIAL	DATE
DESIGNED BY	D'G'H	4-82
CHECKED BY	L.M.K.	4-82
QUANTITIES BY		
CHECKED BY	D.G.H.	4-82
DETAILED BY	L. M. K.	4-82
CHECKED BY	D.G.H.	4-82

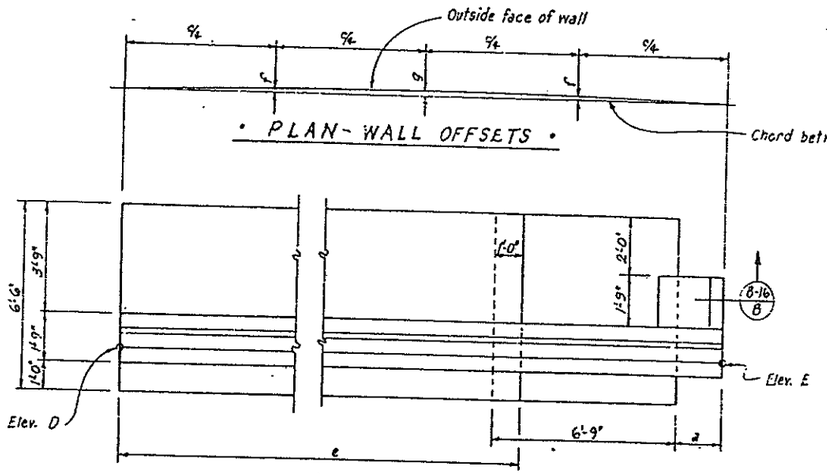

• PLAN - ABUTMENT 3 •
(Left Rail)

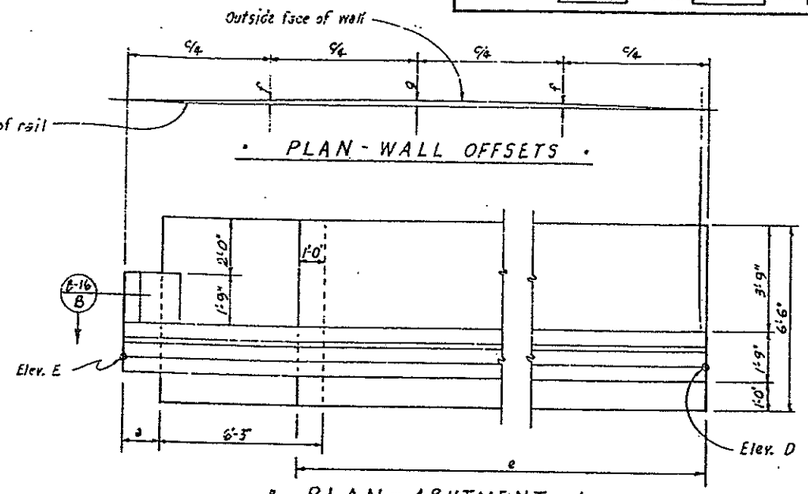

• PLAN - ABUTMENT 1 •
(Left Rail)

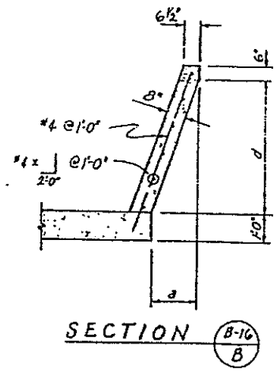

SECTION B-16 B

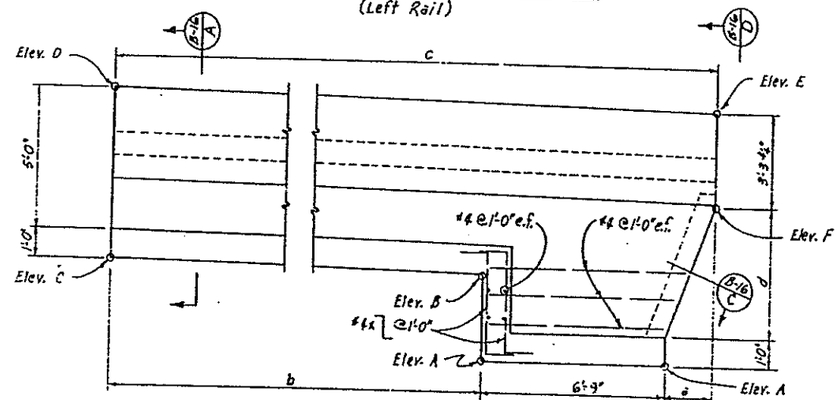

• ELEVATION - ABUTMENT 3 •

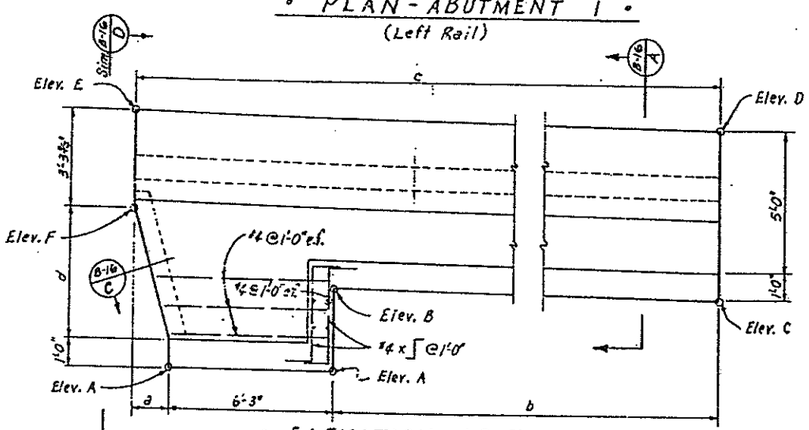

• ELEVATION - ABUTMENT 1 •

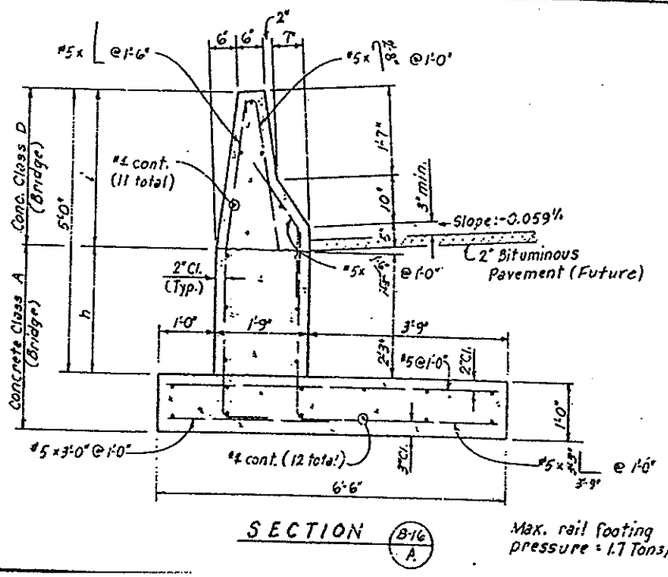

SECTION B-16 A

Max. rail footing pressure = 1.7 Tons/sq. Ft.

TABLE OF ELEVATIONS AND DIMENSIONS

Point or Dim.	STR. NO. F-17-HL		STR. NO. F-17-HM	
	Abut. 3 (Lt. Rail)	Abut. 1 (Lt. Rail)	Abut. 3 (Lt. Rail)	Abut. 1 (Lt. Rail)
A	5819.44	5816.28	5822.35	5819.35
B	22.40	19.04	24.52	20.64
C	22.77	18.65	24.90	20.19
D	28.77	24.65	30.90	26.19
E	28.25	25.17	30.42	26.81
F	24.34	21.86	27.11	23.50
a	1'-9"	1'-6"	1'-3"	1'-3"
b	21'-6"	22'-3"	20'-0"	20'-6"
c	30'-0"	30'-0"	28'-0"	28'-0"
d	4'-6"	5'-7"	3'-3⅞"	3'-1¾"
e	22'-6"	23'-3"	21'-0"	21'-6"
f	6"	½"	½"	½"
g	⅜"	⅜"	⅜"	⅜"
h	1'-9¼"	1'-9½"	1'-9½"	1'-9¼"
i	3'-2⅜"	3'-2½"	3'-2⅜"	3'-2⅜"

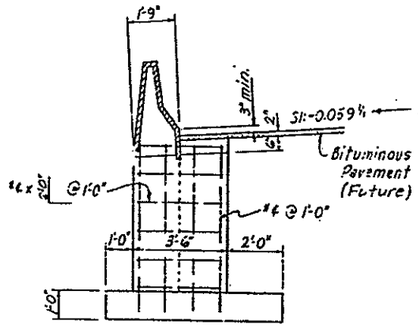

SECTION B-16 D

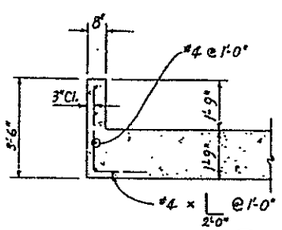

SECTION B-16 C

DIVISION OF HIGHWAYS

S.H. 470 OVER YOSEMITE STREET

RAIL DETAILS
(Left Rails)

Designer	D. Horner	Structure Numbers	F-17-HL
Detailer	L. Keller		F-17-HM

DIVISION OF HIGHWAYS STATE OF COLORADO
FORM FHWA NO. 337
REV. MAR. 77

AS CONSTRUCTED			
NO REVISIONS 8-9-94	REVISED	VOID	

FEDERAL ROAD REG-ION NO.	DIVISION	PROJ. NO.	SHEET NO.	TOTAL SHEETS
VIII	COLORADO	IXFU 470-1(8)	47	

REVISIONS			

	INITIAL	DATE
DRAWN BY	L.K.	5-82
CHECKED BY	D.H.	5-82
QUANTITIES BY	L.K.	6-82
CHECKED BY	L.K.	5-82
DETAILED BY	D.H.	5-82
CHECKED BY	D.H.	5-82

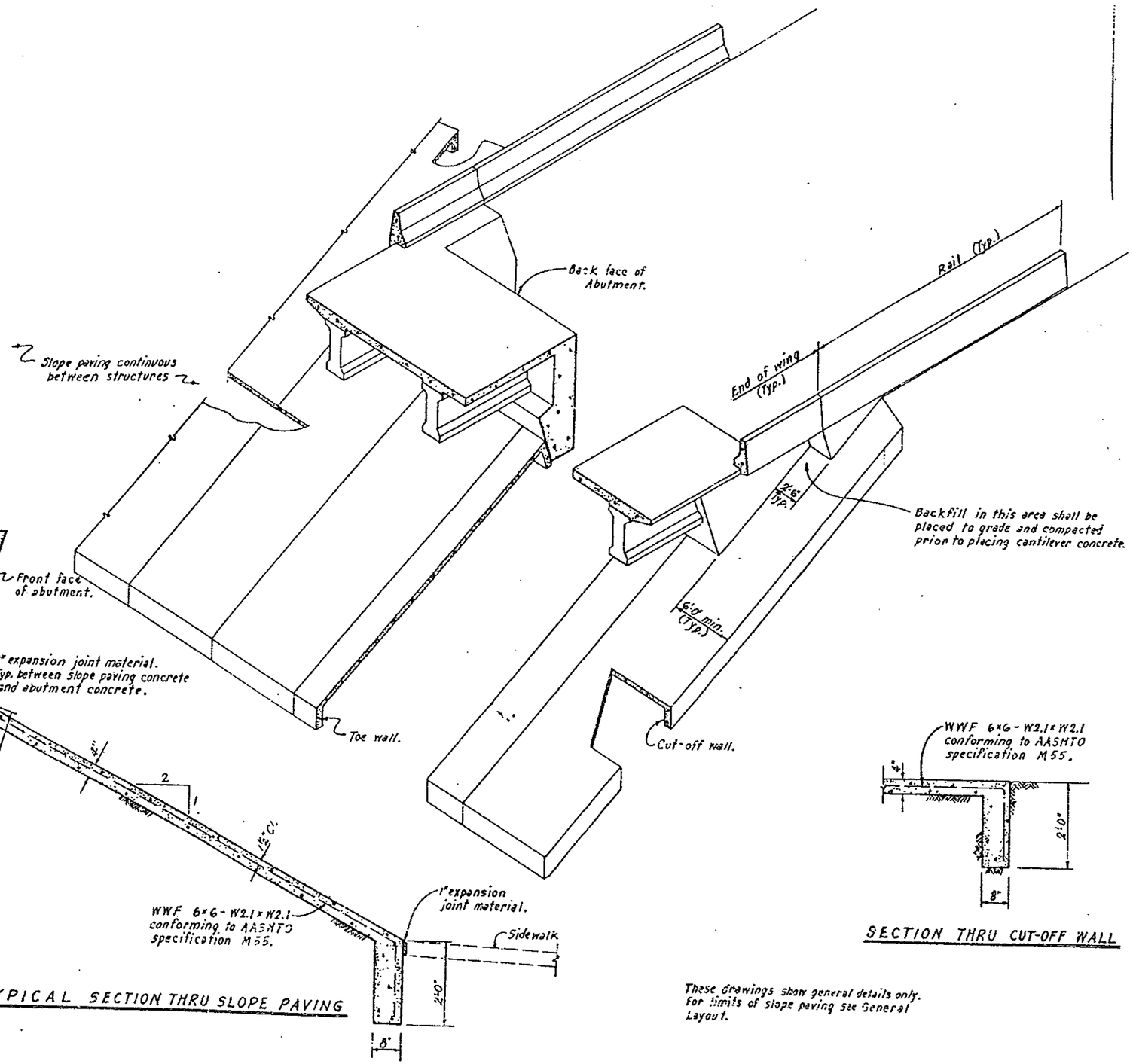

TYPICAL SECTION THRU SLOPE PAVING

SECTION THRU CUT-OFF WALL

These drawings show general details only. For limits of slope paving see General Layout.

NOTES:

Slope paving shall be poured in 10 ft transverse sections with a tooled construction joint at each section.

Wire fabric shall be 2" from the end of the joint and shall lap 8" at splices.

Where slope paving butts against structural concrete, separate with 1" expansion joint material.

Expansion joint material and welded wire fabric shall not be paid for separately, but shall be included in the bid price for Item 507, Concrete Slope and Ditch Paving (Reinforced).

The surface of finished slope paving shall receive a Class 3, float finish of uniform appearance free of float marks and smoothly troweled construction joints.

Structure excavation for slope and ditch paving shall be limited to the actual volume occupied by the slope paving concrete.

DIVISION OF HIGHWAYS

S.H. 470 OVER YOSEMITE STREET

SLOPE PAVING DETAILS

Designer L. Kallio

PEDERAL ROAD REGION NO.	DIVISION	PROJ. NO.	SHEET NO.	TOTAL SHEETS
VIII	COLORADO	IXFU 470-1(8)	48	

AS CONSTRUCTED

NO REVISIONS 8-9-84 REVISED VOID

DESIGNED BY	DRAWN BY	DATE	INITIAL
CHECKED BY	CHECKED BY		
DETAILED BY			

LONGITUDINAL LINE: CENTERLINE GIRDER 3

DESCRIPTION OR FRACTIONAL POINT DESIGNATION	STATION	OFFSET	ELEVATION		COORDINATES FROM LAYOUT LINE OFFSET X	COORDINATES FROM LAYOUT LINE ORDINATE Y	BENT LINE LENGTH FROM Y-AXIS or OFFSET FROM EXTERIOR GIRDER	GIRDER LINE LENGTH
EF ABUT 1	2378+77.2709	14.6162	5825.7787					
CL BRG A1	2378+78.5423	14.6011	5825.7978		14.6611	1.6145	14.9429	-1.2773
F-1	2378+86.1407	14.5216	5825.9604		14.6773	2.8917	14.9554	0.0888
F-2	2378+93.7994	14.4602	5826.1242		14.7741	10.5244		7.6533
F-3	2379+01.3883	14.4169	5826.2889		14.8709	18.1572		15.2667
					14.9677	25.7899		22.9800
F-4	2379+08.9374	14.3917	5826.4536					
F-5	2379+16.5366	14.3847	5826.6176		15.0646	33.4226		
F-6	2379+24.1358	14.3958	5826.7819		15.1614	41.0553		38.5333
F-7	2379+31.7346	14.4250	5826.9436		15.2582	48.6880		38.1667
F-8	2379+39.3337	14.4723	5827.1055		15.3550	56.3208		45.8000
					15.4518	63.9535		53.4333
F-9	2379+46.9324	14.5377	5827.2668					61.0667
BK BRG P2	2379+54.5307	14.6212	5827.4274		15.5486	71.5862		
CL PIER 2	2379+55.1942	14.6294	5827.4414		15.6455	79.2189	15.9462	68.7088
CL PIER 2	2379+55.1937	14.6266	5827.4412		15.6539	79.8855	15.9548	76.3333
AH BRG P2	2379+55.0573	14.6181	5827.4562		15.6512	79.8850	15.9528	77.0000
					15.6428	80.5516	15.9435	0.0000
F-1	2379+69.2519	14.5222	5827.6181					55.4335
F-2	2379+72.6469	14.4484	5827.7812		15.5378	88.9843		.6667
F-3	2379+81.0423	14.3957	5827.9435		15.4312	97.4170		9.1888
F-4	2379+89.4379	14.3671	5828.1058		15.3255	105.8496		17.5334
F-5	2379+97.8335	14.3597	5828.2656		15.2197	114.2823		25.9667
					15.1139	122.7149		34.4000
F-6	2380+06.2292	14.3783	5828.4254					42.8333
F-7	2380+14.6247	14.4311	5828.5843		15.8081	131.1476		
F-8	2380+23.0199	14.4699	5828.7425		14.9824	139.5803		51.2667
F-9	2380+31.4148	14.5589	5828.8998		14.7966	148.0129		59.7000
CL BRG A3	2380+39.8093	14.6540	5829.0562		14.6908	156.4456		68.1333
					14.5850	164.8783	14.8654	76.5666
BF ABUT 3	2380+41.8743	14.6715	5829.0797					85.0000
					14.5691	166.1491	14.8492	86.2718

LONGITUDINAL LINE: CENTERLINE GIRDER 4

DESCRIPTION OR FRACTIONAL POINT DESIGNATION	STATION	OFFSET	ELEVATION		COORDINATES FROM LAYOUT LINE OFFSET X	COORDINATES FROM LAYOUT LINE ORDINATE Y	BENT LINE LENGTH FROM Y-AXIS or OFFSET FROM EXTERIOR GIRDER	GIRDER LINE LENGTH
BF ABUT 1	2378+79.6958	25.5886	5826.4715					
CL BRG A1	2378+88.9638	25.5744	5826.4985		25.6895	3.7673	26.1854	-1.2773
F-1	2378+88.5356	25.5007	5826.6610		25.7857	5.0646	26.1999	0.0888
F-2	2378+96.1084	25.4458	5826.8244		25.8825	12.6973		7.6533
F-3	2379+03.6815	25.4073	5826.9888		25.8994	20.3300		15.2667
					25.9962	27.9627		22.9800
F-4	2379+11.2548	25.3877	5827.1527					
F-5	2379+18.8281	25.3861	5827.3159		26.0930	35.5954		
F-6	2379+26.4013	25.4026	5827.4785		26.1898	43.2282		38.5333
F-7	2379+33.9745	25.4372	5827.6404		26.2866	50.8609		38.1667
F-8	2379+41.5474	25.4898	5827.8016		26.3835	58.4936		45.8000
					26.4803	66.1263		53.4333
F-9	2379+49.1200	25.5605	5827.9621					61.0667
BK BRG P2	2379+56.6923	25.6492	5828.1220		26.5771	73.7590		
CL PIER 2	2379+57.3536	25.6578	5828.1359		26.6739	81.3917	27.1867	68.7088
CL PIER 2	2379+57.3424	25.6003	5828.1323		26.6824	82.0583	27.1953	76.3333
AH BRG P2	2379+58.8036	25.5922	5829.1452		26.6249	82.0476	27.1367	77.0000
					26.6165	82.7137	27.1282	0.0000
F-1	2379+66.3699	25.5620	5828.3084					.6667
F-2	2379+74.7364	25.4557	5828.4707		26.5108	91.1463		
F-3	2379+83.1032	25.3875	5828.6322		26.4050	99.5790		9.1888
F-4	2379+91.4701	25.3633	5828.7929		26.2992	108.0117		17.5334
F-5	2379+99.8372	25.3611	5828.9528		26.1934	116.4443		25.9667
					26.0877	124.8770		34.4000
F-6	2380+08.2042	25.3818	5829.1119					42.8333
F-7	2380+16.5711	25.4230	5829.2701		25.9819	133.3097		
F-8	2380+24.9376	25.4869	5829.4275		25.8761	141.7423		51.2667
F-9	2380+33.3038	25.5729	5829.5841		25.7705	150.1750		59.7000
CL BRG A3	2380+41.6695	25.6810	5829.7398		25.6645	158.6077		68.1333
					25.5588	167.0403	26.0501	76.5666
BF ABUT 3	2380+42.9382	25.6992	5829.7632					85.0000
					25.5428	168.3112	26.0339	86.2718

LONGITUDINAL LINE: RIGHT INSIDE WING

DESCRIPTION OR FRACTIONAL POINT DESIGNATION	STATION	OFFSET	ELEVATION		COORDINATES FROM LAYOUT LINE OFFSET X	COORDINATES FROM LAYOUT LINE ORDINATE Y	BENT LINE LENGTH FROM Y-AXIS or OFFSET FROM EXTERIOR GIRDER	GIRDER LINE LENGTH
END WW A1R	2378+75.6858	26.2500	5826.4222					
BF ABUT 1	2378+79.8415	26.2500	5826.5137		26.2515	-.2702	26.2599	-5.4701
CL BRG A1	2378+81.1314	26.2500	5826.5417		26.3543	3.9183	26.8619	-1.2884
CL BRG A3	2380+41.7651	26.2500	5829.7751		26.3846	5.1983	26.8918	0.0000
EF ABUT 3	2380+43.0226	26.2500	5829.7974		26.1250	167.1519	26.6273	161.9788
					26.0918	168.4192	26.5925	163.2365
END WW A3R	2380+49.2899	26.2500	5829.9076		25.9137	174.7354	25.9216	169.5572

LONGITUDINAL LINE: RIGHT OUTSIDE WING

DESCRIPTION OR FRACTIONAL POINT DESIGNATION	STATION	OFFSET	ELEVATION		COORDINATES FROM LAYOUT LINE OFFSET X	COORDINATES FROM LAYOUT LINE ORDINATE Y	BENT LINE LENGTH FROM Y-AXIS or OFFSET FROM EXTERIOR GIRDER	GIRDER LINE LENGTH
END WW A1R	2378+75.6858	27.2500	5826.4812					
BF ABUT 1	2378+80.0614	27.2500	5826.5776		27.2512	-.2954	27.2599	-5.6934
CL BRG A1	2378+81.3311	27.2500	5826.6055		27.3593	4.2163	27.8853	-1.2303
CL BRG A3	2380+41.9332	27.2500	5829.8371		27.3895	5.3963	27.9161	0.0000
BF ABUT 3	2380+43.1902	27.2500	5829.8593		27.1202	167.3479	27.6415	161.9688
					27.0860	168.6152	27.6067	163.2366
END WW A3R	2380+49.2899	27.2500	5829.9656		26.9132	174.7644	26.9216	169.3882

LONGITUDINAL LINE: RIGHT EDGE OF DECK

DESCRIPTION OR FRACTIONAL POINT DESIGNATION	STATION	OFFSET	ELEVATION		COORDINATES FROM LAYOUT LINE OFFSET X	COORDINATES FROM LAYOUT LINE ORDINATE Y	BENT LINE LENGTH FROM Y-AXIS or OFFSET FROM EXTERIOR GIRDER	GIRDER LINE LENGTH
END WW A1R	2378+75.6858	29.0000	5826.5844					
BF ABUT 1	2378+79.9464	29.0000	5826.6893		29.0007	-.3394	29.0099	-6.0840
CL BRG A1	2378+81.7152	29.0000	5826.7172		29.1188	4.4628	29.6778	-1.2803
X-1	2378+88.5650	29.0000	5826.8681		29.1481	5.7428	29.7885	0.0000
X-2	2378+96.1300	29.0000	5827.0347		29.3817	12.6529	5.4994	6.9118
					29.4542	20.2849	5.5551	14.5454
X-3	2379+03.6949	29.0000	5827.2011		29.5886	27.9171	5.5927	22.1788
X-4	2379+11.2597	29.0000	5827.3659		29.7850	35.5496	5.6123	29.8121
X-5	2379+18.8246	29.0000	5827.5291		29.8034	43.1823	5.6139	37.4455
X-6	2379+26.3894	29.0000	5827.6905		29.8837	50.8152	5.5974	45.0788
X-7	2379+33.9543	29.0000	5827.8502		29.9460	58.4484	5.5629	52.7122
X-8	2379+41.5193	29.0000	5828.0081					
X-9	2379+49.0844	29.0000	5828.1643		29.9903	66.0818	5.5103	60.3458
BK BRG P2	2379+57.3461	29.0000	5828.3329		30.0165	73.7154	5.4397	67.9794
CL PIER 2	2379+58.8050	29.0000	5828.3463		30.0246	82.0519	30.6018	76.3159
AH BRG P2	2379+58.6673	29.0000	5828.3597		30.0245	82.7168	30.6015	76.9808
					30.0239	83.3858	30.6019	77.6490
X-1	2379+66.4024	29.0000	5828.5154		30.0083	91.1902	5.4982	85.4543
X-2	2379+74.7603	29.0000	5828.5816		29.9731	99.6237	5.5669	93.8879
X-3	2379+83.1181	29.0000	5828.8456		29.9115	108.0578	5.6126	102.3213
X-4	2379+91.4758	29.0000	5829.0874		29.8299	116.4908	5.6367	110.7547
X-5	2379+99.8334	29.0000	5829.1674		29.7262	124.9226	5.6389	119.1888
X-6	2380+08.1911	29.0000	5829.3251		29.6806	133.3551	5.6198	127.6214
X-7	2380+16.5488	29.0000	5829.4667		29.4529	141.7872	5.5771	136.0548
X-8	2380+24.9067	29.0000	5829.6342		29.2833	150.2193	5.5132	144.4884
X-9	2380+33.2647	29.0000	5829.7856		29.0916	158.6506	5.4273	152.9221
CL BRG A3	2380+42.2269	29.0000	5829.9455		28.8616	167.6910	29.4164	161.9655
BF ABUT 3	2380+43.4833	29.0000	5829.9678		28.8273	168.9583	29.3815	163.2332
END WW A3R	2380+49.2899	29.0000	5830.0699		28.6625	174.8152	28.6746	169.0924

NOTE: ELEVATIONS ARE AT TOP OF CONCRETE DECK 0.1667 FEET BELOW FINISHED GRADE.

BRIDGE STANDARD 3

REVISIONS

DIVISION OF HIGHWAYS

S.H. 470 OVER YOSEMITE STREET

BRIDGE DECK ELEVATIONS

Designer D. Horner

Detailer D. Dougherty

Structure Numbers F-17-HH

BENT LINE DESCRIPTION OR FRACTIONAL POINT DESIGNATION	STATION	OFFSET	ELEVATION		COORDINATES FROM LAYOUT LINE		BENT LINE LENGTH FROM Y-AXIS or OFFSET FROM EXTERIOR GIRDER	GIRDER LINE LENGTH
					OFFSET X	ORDINATE Y		

LONGITUDINAL LINE: CENTERLINE GIRDER 3

BF ABUT 1	1378+99.0711	41.6119	5824.0823					
CL BRG A1	1379+00.3357	41.5973	5824.1034		41.8014	7.5914	42.7319	-1.2888
F-1	1379+07.8730	41.5203	5824.2360		41.8149	8.8720	42.7457	0.0000
F-2	1379+15.4186	41.4609	5824.3577		41.8953	16.5056		7.6333
F-3	1379+22.9484	41.4191	5824.4864		41.9756	24.1379		15.2667
					42.0560	31.7708		22.9088
F-4	1379+30.4864	41.3948	5824.6161		42.1364	39.4037		30.5333
F-5	1379+38.0244	41.3892	5824.7469		42.2168	47.0366		38.1667
F-6	1379+45.5624	41.3991	5824.8787		42.2972	54.6695		45.8000
F-7	1379+53.1004	41.4276	5825.0115		42.3776	62.3024		53.4334
F-8	1379+60.6381	41.4736	5825.1454		42.4580	69.9353		61.0667
F-9	1379+68.1756	41.5372	5825.2803		42.5384	77.5683		68.7000
BK BRG P2	1379+75.7128	41.6184	5825.4162		42.6188	85.2012	43.3675	76.3334
CL PIER 2	1379+76.3711	41.6264	5825.4281		42.6258	85.8676	43.5747	77.0001
CL PIER 2	1379+76.3702	41.6219	5825.4279		42.6213	85.8669	43.5781	8.0000
AH BRG P2	1379+77.0284	41.6136	5825.4388		42.6128	86.5335	43.5606	.6667
F-1	1379+85.3555	41.5208	5825.5782		42.4945	94.9660		9.1888
F-2	1379+93.6831	41.4494	5825.7189		42.3769	103.3985		17.5333
F-3	1380+02.0109	41.3994	5825.8609		42.2593	111.8310		25.9667
F-4	1380+10.3389	41.3789	5826.0041		42.1418	120.2636		34.4000
F-5	1380+18.6678	41.3639	5826.1486		42.0242	128.6961		42.8334
F-6	1380+26.9951	41.3783	5826.2944		41.9067	137.1286		51.2667
F-7	1380+35.3231	41.4142	5826.4414		41.7891	145.5611		59.7000
F-8	1380+43.6508	41.4715	5826.5897		41.6716	153.9937		68.1334
F-9	1380+51.9782	41.5502	5826.7392		41.5540	162.4262		76.5667
CL BRG A3	1380+60.3052	41.6504	5826.8900		41.4364	170.8587	42.3589	85.0001
BF ABUT 3	1380+61.5632	41.6670	5826.9129		41.4187	172.1326	42.3467	86.2742

LONGITUDINAL LINE: CENTERLINE GIRDER 4

BF ABUT 1	1379+01.6132	52.5836	5824.7738					
CL BRG A1	1379+02.8736	52.5709	5824.7950		52.8266	9.9386	54.0826	-1.2888
F-1	1379+10.3861	52.4989	5824.9215		52.8401	11.2133	54.0164	0.0000
F-2	1379+17.8988	52.4453	5825.0498		52.9205	18.8442		7.6333
F-3	1379+25.4118	52.4093	5825.1776		53.0009	26.4771		15.2667
					53.0813	34.1101		22.9088
F-4	1379+32.9249	52.3908	5825.3073		53.1617	41.7430		30.5333
F-5	1379+40.4380	52.3898	5825.4379		53.2421	49.3759		38.1667
F-6	1379+47.9511	52.4063	5825.5697		53.3225	57.0088		45.8000
F-7	1379+55.4640	52.4403	5825.7024		53.4028	64.6417		53.4334
F-8	1379+62.9768	52.4918	5825.8361		53.4832	72.2746		61.0667
F-9	1379+70.4893	52.5609	5825.9709		53.5636	79.9075		68.7000
BK BRG P2	1379+78.0015	52.6474	5826.1068		53.6440	87.5404	54.8382	76.3334
CL PIER 2	1379+78.6576	52.6558	5826.1187		53.6518	88.2071	54.8454	77.0001
CL PIER 2	1379+78.6449	52.5967	5826.1148		53.5899	88.1942	54.7829	8.0000
AH BRG P2	1379+79.3010	52.5869	5826.1258		53.5806	88.8607	54.7734	.6667
F-1	1379+87.6087	52.4599	5826.2651		53.4631	97.2933		9.1888
F-2	1379+95.9806	52.4342	5826.4056		53.3455	105.7258		17.5333
F-3	15A8+84.2811	52.5899	5826.5474		53.2280	114.1583		25.9667
F-4	1380+12.5816	52.3671	5826.6935		53.1104	122.5908		34.4000
F-5	1380+20.8822	52.3655	5826.8349		52.9928	131.0234		42.8334
F-6	1380+29.1826	52.3854	5826.9805		52.8753	139.4559		51.2667
F-7	1380+37.4831	52.4267	5827.1273		52.7577	147.8884		59.7000
F-8	1380+45.7833	52.4893	5827.2754		52.6402	156.3209		68.1334
F-9	1380+54.0830	52.5733	5827.4248		52.5226	164.7534		76.5667
CL BRG A3	1380+62.3823	52.6787	5827.5754		52.4051	173.1860	53.5717	85.0001
BF ABUT 3	1380+63.5562	52.6965	5827.5983		52.3873	174.4686	53.5535	86.2742

BENT LINE DESCRIPTION OR FRACTIONAL POINT DESIGNATION	STATION	OFFSET	ELEVATION		COORDINATES FROM LAYOUT LINE		BENT LINE LENGTH FROM Y-AXIS or OFFSET FROM EXTERIOR GIRDER	GIRDER LINE LENGTH
					OFFSET X	ORDINATE Y		

LONGITUDINAL LINE: RIGHT INSIDE WING

END WW A1R	1378+97.9372	53.2500	5824.7492					
BF ABUT 1	1379+01.7670	53.2500	5824.8158		53.4109	6.1815	53.4244	-5.1768
CL BRG A1	1379+03.0304	53.2500	5824.8378		53.4962	10.0727	54.6871	-1.2839
CL BRG A3	1380+61.9769	53.2500	5827.6035		53.5235	11.3563	54.7146	0.0000
BF ABUT 3	1380+63.2274	53.2500	5827.6252		52.9853	172.8712	54.1648	161.5317
					52.9500	174.1916	54.1287	162.8025
END WW A3R	1380+69.9185	53.2500	5827.7417		52.7527	180.9386	53.7765	169.6825

LONGITUDINAL LINE: RIGHT OUTSIDE WING

END WW A1R	1378+97.9372	54.2500	5824.8082					
BF ABUT 1	1379+01.9978	54.2500	5824.8788		54.4186	6.1598	54.4244	-5.4117
CL BRG A1	1379+03.2607	54.2500	5824.9008		54.5809	18.2859	55.7142	-1.2838
CL BRG A3	1380+62.1574	54.2500	5827.6656		54.5280	11.5694	55.7419	0.0000
BF ABUT 3	1380+63.4875	54.2500	5827.6874		53.9798	173.0822	55.1815	161.5296
					53.9445	174.3526	55.1453	162.8804
END WW A3R	1380+69.9185	54.2500	5827.8087		53.7523	180.9687	53.7765	169.6193

LONGITUDINAL LINE: RIGHT EDGE OF DECK

END WW A1R	1378+97.9372	56.0000	5824.9114					
BF ABUT 1	1379+02.4812	56.0000	5824.9891		56.1682	6.1196	56.1744	-5.8262
CL BRG A1	1379+03.6635	56.0000	5825.0111		56.2593	18.6589	57.5116	-1.2838
R-1	1379+18.4142	56.0000	5825.1285		56.2861	11.9625	57.5391	0.0000
R-2	1379+17.9194	56.0000	5825.2591		56.4215	18.0874	3.5012	6.0662
					56.5554	26.4597	3.5547	14.4997
R-3	1379+25.4244	56.0000	5825.3897		56.6718	34.8722	3.5987	22.1332
R-4	1379+32.9294	56.0000	5825.5203		56.7787	41.7858	3.6092	29.7665
R-5	1379+40.4344	56.0000	5825.6569		56.8521	49.3379	3.6182	37.3999
R-6	1379+47.9394	56.0000	5825.7815		56.9169	56.9718	3.5958	45.0332
R-7	1379+55.4444	56.0000	5825.9121		56.9624	64.6042	3.5598	52.6666
R-8	1379+62.9496	56.0000	5826.0427		56.9933	72.2377	3.5883	60.3001
R-9	1379+78.4546	56.0000	5826.1732		57.0028	79.8713	3.4393	67.9338
BK BRG P2	1379+78.6541	56.0000	5826.3166		56.9951	88.2515	58.2639	76.3140
CL PIER 2	1379+79.3478	56.0000	5826.3280		56.9936	88.9163	58.2624	76.9788
AH BRG P2	1379+88.0847	56.0000	5826.3344		56.9928	89.5845	58.2687	77.6478
R-1	1379+87.6318	56.0000	5826.4721		56.9630	97.3421	3.5883	85.4846
R-2	1379+95.9236	56.0000	5826.6164		56.9110	105.7755	3.5659	93.8382
R-3	1380+04.2153	56.0000	5826.7687		56.8377	114.2086	3.6181	102.2717
R-4	1380+12.5068	56.0000	5826.9050		56.7438	122.6415	3.6338	110.7050
R-5	1380+20.7983	56.0000	5827.0452		56.6270	131.0740	3.6345	119.1384
R-6	1380+29.0899	56.0000	5827.1935		56.4895	139.5063	3.6146	127.5717
R-7	1380+37.3815	56.0000	5827.3378		56.3308	147.9382	3.5734	136.0052
R-8	1380+45.6732	56.0000	5827.4820		56.1507	156.3699	3.5188	144.4388
R-9	1380+53.9652	56.0000	5827.6263		55.9492	164.8012	3.4269	152.8725
CL BRG A3	1380+62.9811	56.0000	5827.7818		55.7082	173.8868	56.9483	161.9613
PF ABUT 3	1380+64.1505	56.0000	5827.8036		55.6725	175.1570	56.9118	163.2321
END WW A3R	1386+69.9185	56.0000	5827.9039		55.5015	181.0212	55.5265	169.0987

FEDERAL ROAD REGION NO.	DIVISION	PROJ. NO.	SHEET NO.	TOTAL SHEETS
VIII	COLORADO	IXFU 470-1(18)	49	

AS CONSTRUCTED

NO REVISIONS 8-9-84 REVISED VOID

NOTE: ELEVATIONS ARE AT TOP OF CONCRETE DECK 0.1667 FEET BELOW FINISHED GRADE.

BRIDGE STANDARD 3

REVISIONS

DIVISION OF HIGHWAYS

SH 420 OVER YOSEMITE STREET

BRIDGE DECK ELEVATIONS

Designed D. Horner Structure F-17-HI

Federal Road Region No.	Division	Proj. No.	Sheet No.	Total Sheets
VIII	COLORADO	IXFU 470-1(8)	50	

AS CONSTRUCTED

NO REVISIONS 8-9-84 REVISED ____ VOID ____

LONGITUDINAL LINE: LEFT EDGE OF DECK

Bent Line Description or Fractional Point Designation	Station	Offset	Elevation	Coordinates from Layout Line: Offset X	Ordinate Y	Bent Line Length from Y-Axis or Offset from Exterior Girder	Girder Line Length
END WW A1L	2378+55.1339	-11.0000	5823.9921	-11.2687	-9.8443	-11.2733	-7.6681
BF ABUT 1	2378+71.5429	-11.0000	5824.1332	-11.0933	-3.4596	-11.3065	-1.2811
CL BRG A1	2378+72.6265	-11.0000	5824.1615	-11.0596	-2.1790	-11.2722	0.0000
X-1	2378+81.2630	-11.0000	5824.3473	-10.8516	6.2241	-3.5691	8.4056
X-2	2378+88.9230	-11.0000	5824.5160	-10.6818	13.8558	-3.4961	16.0393
X-3	2378+96.5829	-11.0000	5824.6846	-10.5303	21.4879	-3.4414	23.6728
X-4	2379+04.2426	-11.0000	5824.8530	-10.3971	29.1201	-3.4050	31.3862
X-5	2379+11.9023	-11.0000	5825.0199	-10.2821	36.7526	-3.3868	38.9396
X-6	2379+19.5619	-11.0000	5825.1849	-10.1853	44.3853	-3.3869	46.5729
X-7	2379+27.2216	-11.0000	5825.3481	-10.1069	52.0183	-3.4053	54.2063
X-8	2379+34.8813	-11.0000	5825.5096	-10.0467	59.6515	-3.4419	61.8397
X-9	2379+42.5412	-11.0000	5825.6693	-10.0047	67.2849	-3.4968	69.4732
BK BRG P2	2379+49.4497	-11.0000	5825.8118	-9.9826	74.1697	-10.1745	76.3588
CL PIER 2	2379+50.1172	-11.0000	5825.8255	-9.9812	74.8349	-10.1731	77.0233
AH BRG P2	2379+50.7881	-11.0000	5825.8393	-9.9800	75.5034	-10.1718	77.6918
X-1	2379+59.9315	-11.0000	5826.0253	-9.9773	84.6154	-3.5671	86.8838
X-2	2379+68.3944	-11.0000	5826.1952	-9.9980	93.0492	-3.4820	95.2376
X-3	2379+76.8578	-11.0000	5826.3629	-10.0410	101.4826	-3.4192	103.6712
X-4	2379+85.3195	-11.0000	5826.5285	-10.1062	109.9158	-3.3787	112.1846
X-5	2379+93.7819	-11.0000	5826.6919	-10.1938	118.3487	-3.3605	120.5379
X-6	2380+02.2443	-11.0000	5826.8531	-10.3036	126.7813	-3.3646	128.9713
X-7	2380+10.7068	-11.0000	5827.0122	-10.4358	135.2136	-3.3909	137.4846
X-8	2380+19.1693	-11.0000	5827.1691	-10.5902	143.6457	-3.4396	145.8381
X-9	2380+27.6320	-11.0000	5827.3238	-10.7669	152.0775	-3.5195	154.2717
CL BRG A3	2380+35.4309	-11.0000	5827.4645	-10.9495	159.8474	-11.1600	162.8439
BF ABUT 3	2380+36.7835	-11.0000	5827.4672	-10.9811	161.1152	-11.1922	163.3121
END WW A3L	2380+43.3294	-11.0000	5827.6050	-11.1537	167.7161	-11.1578	169.9152

LONGITUDINAL LINE: LEFT OUTSIDE WING

Bent Line Description or Fractional Point Designation	Station	Offset	Elevation	Offset X	Ordinate Y	Bent Line Length from Y-Axis or Offset from Exterior Girder	Girder Line Length
END WW A1L	2378+65.1339	-9.2500	5824.0953	-9.5194	-9.8941	-9.5233	-8.0648
BF ABUT 1	2378+71.9373	-9.2500	5824.2451	-9.3335	-3.1129	-9.5129	-1.2811
CL BRG A1	2378+73.2228	-9.2500	5824.2734	-9.3000	-1.8323	-9.4788	0.0000
CL BRG A3	2380+35.7319	-9.2500	5827.5731	-9.2874	160.1986	-9.3844	162.8404
BF ABUT 3	2380+37.0037	-9.2500	5827.5958	-9.2392	161.4584	-9.4168	163.3085
END WW A3L	2380+43.3294	-9.2500	5827.7883	-9.4843	167.7637	-9.4878	169.6159

LONGITUDINAL LINE: LEFT INSIDE WING

Bent Line Description or Fractional Point Designation	Station	Offset	Elevation	Offset X	Ordinate Y	Bent Line Length from Y-Axis or Offset from Exterior Girder	Girder Line Length
END WW A1L	2378+65.1339	-8.2500	5824.1543	-8.5198	-9.9225	-8.5233	-8.2914
BF ABUT 1	2378+72.1624	-8.2500	5824.3091	-8.3279	-2.9142	-8.4888	-1.2818
CL BRG A1	2378+73.4467	-8.2500	5824.3374	-8.2945	-1.6342	-8.4548	0.0000
CL BRG A3	2380+35.9837	-8.2500	5827.6352	-8.2120	160.3668	-8.3499	162.0384
BF ABUT 3	2380+37.1751	-8.2500	5827.6579	-8.2438	161.6545	-8.4023	163.3065
END WW A3L	2380+43.3294	-8.2500	5827.7673	-8.4847	167.7989	-8.4878	169.4456

LONGITUDINAL LINE: CENTERLINE GIRDER 1

Bent Line Description or Fractional Point Designation	Station	Offset	Elevation	Offset X	Ordinate Y	Bent Line Length from Y-Axis or Offset from Exterior Girder	Girder Line Length
BF ABUT 1	2378+72.3709	-7.3230	5824.3684	-7.3958	-2.7312	-7.5380	-1.2773
CL BRG A1	2378+73.6511	-7.3400	5824.3956	-7.3796	-1.4539	-7.5215	0.0000
F-1	2378+81.3015	-7.4311	5824.5587	-7.2828	6.1788		7.6333
F-2	2378+88.9523	-7.5040	5824.7229	-7.1860	13.8115		15.2667
F-3	2378+96.6035	-7.5566	5824.8881	-7.0892	21.4442		22.9000
F-4	2379+04.2548	-7.5950	5825.0542	-6.9923	29.0769		30.5333
F-5	2379+11.9063	-7.6132	5825.2198	-6.8955	36.7097		38.1667
F-6	2379+19.5578	-7.6131	5825.3546	-6.7987	44.3424		45.8000
F-7	2379+27.2093	-7.5947	5825.5488	-6.7019	51.9751		53.4333
F-8	2379+34.8607	-7.5582	5825.7123	-6.6051	59.6078		61.0667
F-9	2379+42.5118	-7.5034	5825.8750	-6.5083	67.2405		68.7000
BK BRG P2	2379+50.1626	-7.4303	5826.0371	-6.4114	74.8732	-6.5347	76.3333
CL PIER 2	2379+50.8308	-7.4231	5826.0512	-6.4030	75.5398	-6.5261	77.0000
CL PIER 2	2379+50.8520	-7.3165	5826.0579	-6.2963	75.5609	-6.4174	0.0000
AH BRG P2	2379+51.5202	-7.3259	5826.0718	-6.3047	76.2275	-6.4259	.6667
F-1	2379+59.9723	-7.4331	5826.2366	-6.4105	84.6602		9.1000
F-2	2379+68.4250	-7.5181	5826.4012	-6.5162	93.0928		17.5334
F-3	2379+76.8780	-7.5809	5826.5651	-6.6220	101.5255		25.9667
F-4	2379+85.3313	-7.6213	5826.7281	-6.7278	109.9582		34.4000
F-5	2379+93.7847	-7.6395	5826.8902	-6.8336	118.3908		42.8333
F-6	2380+02.2382	-7.6355	5827.0515	-6.9394	126.8235		51.2667
F-7	2380+10.6917	-7.6091	5827.2120	-7.0451	135.2562		59.7000
F-8	2380+19.1449	-7.5605	5827.3716	-7.1509	143.6888		68.1333
F-9	2380+27.5978	-7.4897	5827.5303	-7.2567	152.1215		76.5666
CL BRG A3	2380+36.0502	-7.3966	5827.6881	-7.3625	160.5541	-7.5040	85.0000
BF ABUT 3	2380+37.3241	-7.3896	5827.7119	-7.3784	161.8250	-7.5282	86.2710

LONGITUDINAL LINE: BASELINE, PROFILE GR

Bent Line Description or Fractional Point Designation	Station	Offset	Elevation	Offset X	Ordinate Y	Bent Line Length from Y-Axis or Offset from Exterior Girder	Girder Line Length
BF ABUT 1	2378+74.0141	0.0000	5824.0366	-.0327	-1.2805	-.0333	-1.2809
CL BRG A1	2378+75.2950	0.0000	5824.0648	-.0000	-.0000	-.0000	0.0000
F-1	2378+82.9296	0.0000	5825.0338	.1840	7.6324		7.6346
F-2	2378+90.5643	0.0000	5825.2011	.3499	15.2652		15.2693
F-3	2378+98.1989	0.0000	5825.3692	.4975	22.8984		22.9039
F-4	2379+05.8335	0.0000	5825.5360	.6270	30.5320		30.5385
F-5	2379+13.4681	0.0000	5825.7027	.7382	38.1658		38.1732
F-6	2379+21.1028	0.0000	5825.8669	.8312	45.7998		45.8078
F-7	2379+28.7374	0.0000	5826.0292	.9061	53.4341		53.4424
F-8	2379+36.3720	0.0000	5826.1898	.9627	61.0685		61.0774
F-9	2379+44.0067	0.0000	5826.3487	1.0011	68.7031		68.7117
BK BRG P2	2379+51.6413	0.0000	5826.5057	1.0214	76.3377	1.0410	76.3463
CL PIER 2	2379+52.3064	0.0000	5826.5193	1.0225	77.0028	1.0419	77.0114
AH BRG P2	2379+52.9749	0.0000	5826.5330	1.0230	77.6712	1.0427	77.6799
F-1	2379+61.4091	0.0000	5826.7041	1.0207	86.1054		86.1141
F-2	2379+69.8433	0.0000	5826.8731	.9961	94.5396		94.5483
F-3	2379+78.2775	0.0000	5827.0399	.9494	102.9737		102.9825
F-4	2379+86.7117	0.0000	5827.2045	.8804	111.4076		111.4167
F-5	2379+95.1459	0.0000	5827.3670	.7892	119.8413		119.8509
F-6	2380+03.5801	0.0000	5827.5274	.6758	128.2748		128.2851
F-7	2380+12.0144	0.0000	5827.6856	.5402	136.7079		136.7194
F-8	2380+20.4486	0.0000	5827.8416	.3823	145.1406		145.1536
F-9	2380+28.8826	0.0000	5827.9955	.2023	153.5729		153.5878
CL BRG A3	2380+37.3170	0.0000	5828.1472	.0000	162.0047	.0000	162.0220
BF ABUT 3	2380+38.5851	0.0000	5828.1698	-.0323	163.2724	-.0330	163.2901

LONGITUDINAL LINE: CENTERLINE GIRDER 2

Bent Line Description or Fractional Point Designation	Station	Offset	Elevation	Offset X	Ordinate Y	Bent Line Length from Y-Axis or Offset from Exterior Girder	Girder Line Length
BF ABUT 1	2378+74.8293	3.6456	5825.0697	3.6326	-.5583	3.7025	-1.2773
CL BRG A1	2378+76.1051	3.6296	5825.0568	3.6488	.7109	3.7190	0.0000
F-1	2378+83.7294	3.5443	5825.2597	3.7457	8.3516		7.6333
F-2	2378+91.3541	3.4772	5825.4236	3.8425	15.9843		15.2667
F-3	2378+98.9790	3.4283	5825.5887	3.9393	23.6171		22.9000
F-4	2379+06.6041	3.3975	5825.7541	4.0361	31.2498		30.5333
F-5	2379+14.2294	3.3849	5825.9189	4.1329	38.8825		38.1667
F-6	2379+21.8547	3.3905	5826.0830	4.2297	46.5152		45.8000
F-7	2379+29.4799	3.4143	5826.2464	4.3266	54.1479		53.4333
F-8	2379+37.1049	3.4563	5826.4091	4.4234	61.7806		61.0667
F-9	2379+44.7297	3.5164	5826.5711	4.5202	69.4134		68.7000
BK BRG P2	2379+52.3542	3.5947	5826.7324	4.6170	77.0461	4.7058	76.3333
CL PIER 2	2379+53.0280	3.6024	5826.7465	4.6255	77.7127	4.7144	77.0000
CL PIER 2	2379+53.0303	3.6543	5826.7497	4.6774	77.7229	4.7673	0.0000
AH BRG P2	2379+53.6962	3.6454	5826.7628	4.6690	78.3896	4.7588	.6667
F-1	2379+62.1194	3.5438	5826.9275	4.5633	86.8222		9.1000
F-2	2379+70.5432	3.4644	5827.0914	4.4575	95.2549		17.5334
F-3	2379+78.9673	3.4072	5827.2545	4.3517	103.6876		25.9667
F-4	2379+87.3916	3.3722	5827.4167	4.2459	112.1202		34.4000
F-5	2379+95.8161	3.3594	5827.5781	4.1402	120.5529		42.8333
F-6	2380+04.2406	3.3695	5827.7386	4.0344	128.9856		51.2667
F-7	2380+12.6649	3.4024	5827.8983	3.9286	137.4182		59.7000
F-8	2380+21.0891	3.4541	5828.0572	3.8228	145.8509		68.1333
F-9	2380+29.5129	3.5301	5828.2152	3.7171	154.2835		76.5666
CL BRG A3	2380+37.9562	3.6282	5828.3723	3.6113	162.7162	3.6887	85.0000
BF ABUT 3	2380+39.2056	3.6449	5828.3959	3.5953	163.9471	3.6645	86.2710

LONGITUDINAL LINE: CENTERLINE OF BRIDGE

Bent Line Description or Fractional Point Designation	Station	Offset	Elevation	Offset X	Ordinate Y	Bent Line Length from Y-Axis or Offset from Exterior Girder	Girder Line Length
BF ABUT 1	2378+76.0231	9.0000	5825.4119	9.0155	.5822	9.1808	-1.2807
CL BRG A1	2378+77.3002	9.0000	5825.4400	9.0474	1.7825	9.2213	0.0000
F-1	2378+84.9125	9.0000	5825.6076	9.2266	9.4141		7.6337
F-2	2378+92.5248	9.0000	5825.7753	9.3877	17.0461		15.2674
F-3	2379+00.1376	9.0000	5825.9429	9.5307	24.6784		22.9010
F-4	2379+07.7493	9.0000	5826.1096	9.6556	32.3111		30.5347
F-5	2379+15.3616	9.0000	5826.2746	9.7622	39.9440		38.1684
F-6	2379+22.9739	9.0000	5826.4378	9.8508	47.5771		45.8021
F-7	2379+30.5862	9.0000	5826.5993	9.9212	55.2105		53.4357
F-8	2379+38.1984	9.0000	5826.7590	9.9734	62.8440		61.0694
F-9	2379+45.8107	9.0000	5826.9169	10.0075	70.4776		68.7031
BK BRG P2	2379+53.4230	9.0000	5827.0731	10.0235	78.1113	10.2161	76.3368
CL PIER 2	2379+54.0862	9.0000	5827.0867	10.0240	78.7763	10.2167	77.0018
AH BRG P2	2379+54.7527	9.0000	5827.1002	10.0244	79.4447	10.2172	77.6782
F-1	2379+63.1625	9.0000	5827.2704	10.0174	87.8781		86.1836
F-2	2379+71.5722	9.0000	5827.4384	9.9883	96.3114		94.5370
F-3	2379+79.9820	9.0000	5827.6043	9.9370	104.7447		102.9704
F-4	2379+88.3918	9.0000	5827.7681	9.8635	113.1778		111.4038
F-5	2379+96.8015	9.0000	5827.9297	9.7680	121.6106		119.8372
F-6	2380+05.2113	9.0000	5828.0891	9.6502	130.0432		128.2706
F-7	2380+13.6211	9.0000	5828.2465	9.5104	138.4755		136.7041
F-8	2380+22.0308	9.0000	5828.4016	9.3483	146.9073		145.1375
F-9	2380+30.4406	9.0000	5828.5547	9.1642	155.3387		153.5709
CL BRG A3	2380+38.8504	9.0000	5828.7055	8.9579	163.7696	9.1301	162.0043
BF ABUT 3	2380+40.1146	9.0000	5828.7280	8.9249	165.0371	9.0965	163.2722

NOTE: ELEVATIONS ARE AT TOP OF CONCRETE DECK 0.1667 FEET BELOW FINISHED GRADE.

BRIDGE STANDARD 3

REVISIONS

DIVISION OF HIGHWAYS

S.H. 470 ... OVER YOSEMITE STREET

BRIDGE DECK ELEVATIONS

Designer: D. Horner

Structure Number: F-17-HM

DIVISION OF HIGHWAYS STATE OF COLORADO

FEDERAL ROAD REGION NO.	DIVISION	PROJ. NO.	SHEET NO.	TOTAL SHEETS
XIII	COLORADO	IXF.U. 470-1(8)	-51	

AS CONSTRUCTED

NO REVISIONS 8-5-64 REVISED VOID

INITIAL	DATE	
		DESIGNED BY
		CHECKED BY
		DETAILED BY
		QUANTITIES BY
		CHECKED BY

LONGITUDINAL LINE: BASELINE, PROFILE GR

BENT LINE DESCRIPTION OR FRACTIONAL POINT DESIGNATION	STATION	OFFSET	ELEVATION		COORDINATES FROM LAYOUT LINE OFFSET X	COORDINATES FROM LAYOUT LINE ORDINATE Y	BENT LINE LENGTH FROM Y-AXIS or OFFSET FROM EXTERIOR GIRDER	GIRDER LINE LENGTH
BF ABUT 1	1378+89.2787	0.0000	5821.4566		-.0321	-1.2846	-.0328	-1.2850
CL BRG A1	1378+90.5557	0.0000	5821.4790		-.0000	0.0000	-.0000	0.0000
F-1	1378+98.1936	0.0000	5821.6119		.1801	7.6358		7.6379
F-2	1379+05.8315	0.0000	5821.7448		.3425	15.2719		15.2758
F-3	1379+13.4694	0.0000	5821.8777		.4870	22.9065		22.9137
F-4	1379+21.1073	0.0000	5822.0106		.6136	30.5453		30.5516
F-5	1379+28.7452	0.0000	5822.1435		.7225	38.1824		38.1895
F-6	1379+36.3831	0.0000	5822.2764		.8136	45.8198		45.8274
F-7	1379+44.0210	0.0000	5822.4093		.8868	53.4573		53.4653
F-8	1379+51.6588	0.0000	5822.5422		.9422	61.0950		61.1031
F-9	1379+59.2967	0.0000	5822.6751		.9798	68.7328		68.7410
BK BRG P2	1379+66.9346	0.0000	5822.8080		.9996	76.3707	1.0219	76.3789
CL PIER 2	1379+67.6000	0.0000	5822.8196		1.0005	77.0360	1.0228	77.0443
AH BRG P2	1379+68.2687	0.0000	5822.8312		1.0013	77.7047	1.0236	77.7130
F-1	1379+76.7058	0.0000	5822.9780		.9990	86.1418		86.1501
F-2	1379+85.1428	0.0000	5823.1248		.9749	94.5788		94.5871
F-3	1379+93.5799	0.0000	5823.2716		.9292	103.0157		103.0242
F-4	1380+02.0169	0.0000	5823.4184		.8616	111.4525		111.4612
F-5	1380+10.4540	0.0000	5823.5652		.7724	119.8891		119.8983
F-6	1380+18.8910	0.0000	5823.7120		.6614	128.3254		128.3353
F-7	1380+27.3281	0.0000	5823.8588		.5286	136.7614		136.7724
F-8	1380+35.7651	0.0000	5824.0056		.3742	145.1970		145.2094
F-9	1380+44.2021	0.0000	5824.1525		.1980	153.6322		153.6464
CL BRG A3	1380+52.6392	0.0000	5824.2993		.0000	162.0669	.0000	162.0835
BF ABUT 3	1380+53.9187	0.0000	5824.3214		-.0317	163.3360	-.0324	163.3550

LONGITUDINAL LINE: LEFT EDGE OF DECK

BENT LINE DESCRIPTION OR FRACTIONAL POINT DESIGNATION	STATION	OFFSET	ELEVATION		COORDINATES FROM LAYOUT LINE OFFSET X	COORDINATES FROM LAYOUT LINE ORDINATE Y	BENT LINE LENGTH FROM Y-AXIS or OFFSET FROM EXTERIOR GIRDER	GIRDER LINE LENGTH
END WW A1L	1378+86.9560	16.0000	5822.3604		15.9036	-4.0121	15.9089	-7.4277
BF ABUT 1	1378+93.0692	16.0000	5822.4667		16.0566	2.1298	16.4141	-1.2847
CL BRG A1	1378+94.3476	16.0000	5822.4890		16.0872	3.4133	16.4453	0.0000
X-1	1379+02.7593	16.0000	5822.6353		16.2758	11.0640	-3.5692	8.4528
X-2	1379+10.3558	16.0030	5822.7675		16.4274	19.4962	-3.4979	16.0865
X-3	1379+17.9522	16.0000	5822.8997		16.5613	27.1285	-3.4444	23.7200
X-4	1379+25.5485	16.0000	5823.0319		16.6775	34.7610	-3.4086	31.3534
X-5	1379+33.1446	16.0000	5823.1641		16.7760	42.3938	-3.3985	38.7868
X-6	1379+40.7410	16.0000	5823.2962		16.8568	50.0267	-3.3981	46.6201
X-7	1379+48.3372	16.0000	5823.4284		16.9199	57.6590	-3.4474	54.2535
X-8	1379+55.9335	16.0000	5823.5606		16.9653	65.2931	-3.4424	61.8869
X-9	1379+63.5299	16.0000	5823.6928		16.9930	72.9265	-3.4951	69.5204
BK BRG P2	1379+70.3362	16.0000	5823.8112		17.0027	79.7461	17.3812	76.3686
CL PIER 2	1379+70.9982	16.0000	5823.8227		17.0029	80.4313	17.3814	77.0252
AH BRG P2	1379+71.6636	16.0000	5823.8343		17.0030	81.0999	17.3815	77.6938
X-1	1379+80.7809	16.0000	5823.9929		16.9900	90.2618	-3.5675	86.0557
X-2	1379+89.1736	16.0000	5824.1390		16.9555	98.6954	-3.4844	95.2894
X-3	1379+97.5662	16.0000	5824.2850		16.8995	107.1280	-3.4230	103.7230
X-4	1380+05.9586	16.0000	5824.4310		16.8218	115.5619	-3.3831	112.1564
X-5	1380+14.3509	16.0000	5824.5770		16.7224	123.9947	-3.3649	120.5698
X-6	1380+22.7433	16.0000	5824.7231		16.6015	132.4271	-3.3682	129.0231
X-7	1380+31.1356	16.0000	5824.8691		16.4590	140.8593	-3.3932	137.4565
X-8	1380+39.5281	16.0000	5825.0151		16.2948	149.2912	-3.4398	145.8900
X-9	1380+47.5207	16.0000	5825.1612		16.1090	157.7227	-3.5080	154.3234
CL BRG A3	1380+55.6074	16.0000	5825.2949		15.9199	165.4447	16.2745	162.0479
BF ABUT 3	1380+56.8725	16.0000	5825.3169		15.8871	166.7156	16.2407	163.3192
END WW A3L	1380+63.6789	16.0000	5825.4353		15.7818	173.5527	15.7880	170.1580

LONGITUDINAL LINE: LEFT OUTSIDE WING

BENT LINE DESCRIPTION OR FRACTIONAL POINT DESIGNATION	STATION	OFFSET	ELEVATION		COORDINATES FROM LAYOUT LINE OFFSET X	COORDINATES FROM LAYOUT LINE ORDINATE Y	BENT LINE LENGTH FROM Y-AXIS or OFFSET FROM EXTERIOR GIRDER	GIRDER LINE LENGTH
END WW A1L	1378+86.9560	17.7500	5822.4636		17.6530	-4.0574	17.6589	-7.8463
BF ABUT 1	1378+93.4823	17.7500	5822.5772		17.8161	2.5023	18.2127	-1.2846
CL BRG A1	1378+94.7606	17.7500	5822.5994		17.8465	3.7866	18.2438	0.0000
CL BRG A3	1380+55.4970	17.7500	5825.3962		17.6722	165.3787	18.0656	161.6085
BF ABUT 3	1380+56.7615	17.7500	5825.4182		17.6394	166.6496	18.0320	162.8797
END WW A3L	1380+63.6789	17.7500	5825.5386		17.4511	173.6019	17.4580	169.8347

LONGITUDINAL LINE: LEFT INSIDE WING

BENT LINE DESCRIPTION OR FRACTIONAL POINT DESIGNATION	STATION	OFFSET	ELEVATION		COORDINATES FROM LAYOUT LINE OFFSET X	COORDINATES FROM LAYOUT LINE ORDINATE Y	BENT LINE LENGTH FROM Y-AXIS or OFFSET FROM EXTERIOR GIRDER	GIRDER LINE LENGTH
END WW A1L	1378+86.9560	18.7500	5822.5226		18.6527	-4.0832	18.6589	-8.0855
BF ABUT 1	1378+93.7182	18.7500	5822.6403		18.8219	2.7156	19.2404	-1.2846
CL BRG A1	1378+94.9955	18.7500	5822.6625		18.8517	3.9999	19.2714	0.0000
CL BRG A3	1380+55.6815	18.7500	5825.4584		18.6671	165.5898	19.0827	161.6063
BF ABUT 3	1380+56.9456	18.7500	5825.4804		18.6342	166.8606	19.0498	162.8775
END WW A3L	1380+63.6789	18.7500	5825.5976		18.4587	173.6381	18.4580	169.6494

LONGITUDINAL LINE: CENTERLINE GIRDER 1

BENT LINE DESCRIPTION OR FRACTIONAL POINT DESIGNATION	STATION	OFFSET	ELEVATION		COORDINATES FROM LAYOUT LINE OFFSET X	COORDINATES FROM LAYOUT LINE ORDINATE Y	BENT LINE LENGTH FROM Y-AXIS or OFFSET FROM EXTERIOR GIRDER	GIRDER LINE LENGTH
BF ABUT 1	1378+93.9361	19.6745	5822.6986		19.7509	2.9128	20.1906	-1.2808
CL BRG A1	1378+95.2091	19.6579	5822.7198		19.7644	4.1935	20.2044	0.0000
F-1	1379+02.7965	19.5690	5822.8466		19.8448	11.8264		7.6333
F-2	1379+10.3842	19.4978	5822.9744		19.9252	19.4593		15.2667
F-3	1379+17.9723	19.4445	5823.1033		20.0055	27.0922		22.9000
F-4	1379+25.5605	19.4086	5823.2332		20.0859	34.7251		30.5333
F-5	1379+33.1489	19.3905	5823.3642		20.1663	42.3581		38.1667
F-6	1379+40.7373	19.3901	5823.4962		20.2467	49.9910		45.8000
F-7	1379+48.3256	19.4073	5823.6292		20.3271	57.6239		53.4334
F-8	1379+55.9138	19.4423	5823.7633		20.4075	65.2568		61.0667
F-9	1379+63.5019	19.4950	5823.8985		20.4879	72.8897		68.7000
BK BRG P2	1379+71.0896	19.5654	5824.0346		20.5683	80.5226	21.0261	76.3334
CL PIER 2	1379+71.7523	19.5723	5824.0466		20.5753	81.1893	21.0333	77.0001
CL PIER 2	1379+71.7753	19.6811	5824.0534		20.6841	81.2124	21.1445	0.0000
AH BRG P2	1379+72.4379	19.6719	5824.0644		20.6748	81.8790	21.1350	.6667
F-1	1379+80.8283	19.5673	5824.2041		20.5572	90.3115		9.1000
F-2	1379+89.2033	19.4843	5824.3450		20.4396	98.7440		17.5333
F-3	1379+97.5866	19.4229	5824.4873		20.3221	107.1765		25.9667
F-4	1380+05.9782	19.3831	5824.6308		20.2045	115.6090		34.4000
F-5	1380+14.3539	19.3648	5824.7756		20.0870	124.0416		42.8334
F-6	1380+22.7376	19.3682	5824.9217		19.9694	132.4741		51.2667
F-7	1380+31.1213	19.3932	5825.0690		19.8519	140.9066		59.7000
F-8	1380+39.5048	19.4397	5825.2177		19.7343	149.3391		68.1334
F-9	1380+47.8880	19.5079	5825.3676		19.6167	157.7716		76.5667
CL BRG A3	1380+56.2708	19.5976	5825.5187		19.4992	166.2042	19.9333	85.0001
BF ABUT 3	1380+57.5373	19.6131	5825.5417		19.4814	167.4782	19.9151	86.2742

LONGITUDINAL LINE: CENTERLINE GIRDER 2

BENT LINE DESCRIPTION OR FRACTIONAL POINT DESIGNATION	STATION	OFFSET	ELEVATION		COORDINATES FROM LAYOUT LINE OFFSET X	COORDINATES FROM LAYOUT LINE ORDINATE Y	BENT LINE LENGTH FROM Y-AXIS or OFFSET FROM EXTERIOR GIRDER	GIRDER LINE LENGTH
BF ABUT 1	1378+96.5121	30.6422	5823.3905		30.7761	5.2521	31.4612	-1.28
CL BRG A1	1378+97.7809	30.6255	5823.4117		30.7896	6.5328	31.4750	0.00
F-1	1379+05.3432	30.5437	5823.5384		30.8700	14.1657		7.63
F-2	1379+12.9058	30.4734	5823.6661		30.9504	21.7986		15.26
F-3	1379+20.4686	30.4358	5823.7949		31.0308	29.4315		22.90
F-4	1379+28.0316	30.4038	5823.9247		31.1112	37.0644		30.53
F-5	1379+35.5947	30.3834	5824.0556		31.1916	44.6973		38.16
F-6	1379+43.1579	30.3937	5824.1875		31.2720	52.3302		45.80
F-7	1379+50.7209	30.4156	5824.3205		31.3523	59.9632		53.43
F-8	1379+58.2839	30.4571	5824.4544		31.4327	67.5961		61.06
F-9	1379+65.8466	30.5153	5824.5895		31.5131	75.2290		68.70
BK BRG P2	1379+73.4089	30.5911	5824.7255		31.5935	82.8619	32.2968	76.33
CL PIER 2	1379+74.0694	30.5955	5824.7375		31.6005	83.5286	32.3040	77.00
CL PIER 2	1379+74.0604	30.6557	5824.7407		31.6527	83.5396	32.3573	0.00
AH BRG P2	1379+74.7408	30.6420	5824.7517		31.6434	84.2062	32.3478	.666
F-1	1379+83.0955	30.5433	5824.8912		31.5258	92.6387		9.10
F-2	1379+91.4506	30.4551	5825.0321		31.4083	101.0713		17.533
F-3	1379+99.8061	30.4184	5825.1742		31.2907	109.5038		25.966
F-4	1380+08.1618	30.3763	5825.3175		31.1732	117.9363		34.400
F-5	1380+16.5176	30.3637	5825.4622		31.0556	126.3688		42.833
F-6	1380+24.8735	30.3726	5825.6081		30.9380	134.8013		51.266
F-7	1380+33.2292	30.4030	5825.7553		30.8205	143.2339		59.700
F-8	1380+41.5847	30.4549	5825.9037		30.7029	151.6664		68.133
F-9	1380+49.9399	30.5294	5826.0535		30.5854	160.0989		76.566
CL BRG A3	1380+58.2947	30.6234	5826.2044		30.4678	168.5314	31.1461	85.000
BF ABUT 3	1380+59.5576	30.6396	5826.2274		30.4501	169.8055	31.1279	86.274

LONGITUDINAL LINE: CENTERLINE OF BRIDGE

BENT LINE DESCRIPTION OR FRACTIONAL POINT DESIGNATION	STATION	OFFSET	ELEVATION		COORDINATES FROM LAYOUT LINE OFFSET X	COORDINATES FROM LAYOUT LINE ORDINATE Y	BENT LINE LENGTH FROM Y-AXIS or OFFSET FROM EXTERIOR GIRDER	GIRDER LINE LENGTH
BF ABUT 1	1378+97.7642	36.0000	5823.7284		36.1613	6.3947	36.9663	-1.2842
CL BRG A1	1378+99.0344	36.0000	5823.7505		36.1980	7.6786	36.9957	0.0000
F-1	1379+06.5851	36.0000	5823.8819		36.3584	15.3106		7.6337
F-2	1379+14.1357	36.0000	5824.0133		36.4932	22.9429		15.2674
F-3	1379+21.6864	36.0000	5824.1447		36.6183	30.5756		22.9010
F-4	1379+29.2371	36.0000	5824.2761		36.7259	38.2085		30.5347
F-5	1379+36.7877	36.0000	5824.4074		36.8159	45.8416		38.1684
F-6	1379+44.3384	36.0000	5824.5388		36.8882	53.4750		45.8021
F-7	1379+51.8890	36.0000	5824.6702		36.9430	61.1084		53.4357
F-8	1379+59.4397	36.0000	5824.8016		36.9801	68.7420		61.0694
F-9	1379+66.9903	36.0000	5824.9330		36.9997	76.3757		68.7031
BK BRG P2	1379+74.5410	36.0000	5825.0643		37.0016	84.0094	37.0253	76.3368
CL PIER 2	1379+75.1988	36.0000	5825.0758		37.0010	84.6744	37.0246	77.0018
AH BRG P2	1379+75.8599	36.0000	5825.0873		37.0001	85.3428	37.0238	77.6702
F-1	1379+84.2016	36.0000	5825.2324		36.9784	93.7762		86.1036
F-2	1379+92.5433	36.0000	5825.3776		36.9352	102.2094		94.5370
F-3	1380+00.8849	36.0000	5825.5227		36.8705	110.6426		102.9704
F-4	1380+09.2266	36.0000	5825.6679		36.7843	119.0756		111.4038
F-5	1380+17.5683	36.0000	5825.8130		36.6767	127.5083		119.8372
F-6	1380+25.9100	36.0000	5825.9582		36.5475	135.9407		128.2706
F-7	1380+34.2516	36.0000	5826.1033		36.3969	144.3727		136.7040
F-8	1380+42.5933	36.0000	5826.2485		36.2248	152.8044		145.1374
F-9	1380+50.9350	36.0000	5826.3936		36.0312	161.2355		153.5708
CL BRG A3	1380+59.2767	36.0000	5826.5387		35.8161	169.6662	36.6134	162.0042
BF ABUT 3	1380+60.5339	36.0000	5826.5606		35.7818	170.9368	36.5784	163.2752

NOTE: ELEVATIONS ARE AT TOP OF CONCRETE DECK 0.1667 FEET BELOW FINISHED GRADE.

BRIDGE STANDARD 3

REVISIONS

DIVISION OF HIGHWAYS

S.H. 470 OVER YOSEMITE STREET

BRIDGE DECK ELEVATIONS

Designer D Horner | Structure Numbers F-17-HL

Detailer D Dougherty

AS CONSTRUCTED			
NO REVISIONS	8-9-84	REVISED	VOID

FEDERAL ROAD REGION NO.	DIVISION	PROJ. NO.	SHEET NO.	TOTAL SHEETS
VIII	COLORADO	IXEU 470-1-1(8)	52	

REVISIONS		

BRIDGE STANDARD 1

ROADWAY APPROACHES

ELEVATIONS ARE AT FINISHED GRADE

STATION	OFFSETS			
	17.0000	21.0000	45.0000	55.0000
1377+58.0	5820.38	5820.41	5821.87	5822.41
+68.0	20.36	20.60	22.01	22.68
+78.0	20.54	20.78	22.19	22.78
+88.0	20.72	20.96	22.37	22.96
1377+98.0	5820.90	5821.13	5822.55	5823.14
1378+08.0	21.07	21.31	22.73	23.32
+18.0	21.25	21.48	22.90	23.49
+28.0	21.42	21.66	23.07	23.66
1378+38.0	5821.60	5821.83	5823.25	5823.84
+48.0	21.77	22.01	23.42	24.01
+58.0	21.94	22.18	23.60	24.19
+68.0	22.12	22.35	23.77	24.36
1378+78.0	5822.29	5822.53	5823.94	5824.53
+88.0	22.47	22.70	24.12	24.71
+98.0	22.64	22.87	24.29	24.88
1379+08.0	22.81	23.05	24.47	25.06

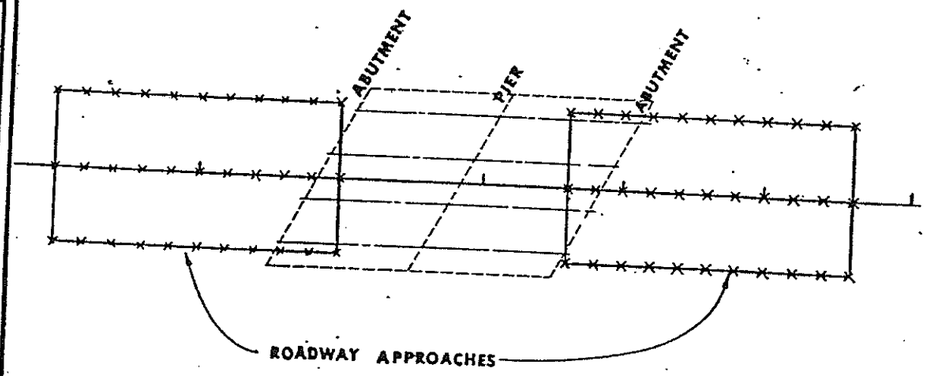

* TANGENT ALIGNMENT

STATION	OFFSETS			
	17.0000	21.0000	45.0000	55.0000
1380+58.0	5825.42	5825.66	5827.08	5827.67
+68.0	25.60	25.83	27.25	27.84
+78.0	25.77	26.01	27.42	28.01
+88.0	25.95	26.18	27.60	28.19
1380+98.0	5826.12	5826.35	5827.77	5828.36
1381+08.0	26.29	26.53	27.95	28.54
+18.0	26.47	26.70	28.12	29.71
+28.0	26.64	26.88	28.29	28.88
1381+38.0	5826.82	5827.05	5828.47	5829.06
+48.0	26.99	27.23	28.64	29.23
+58.0	27.16	27.40	28.82	29.41
+68.0	27.34	27.57	28.99	29.58
1381+78.0	5827.51	5827.75	5829.16	5629.75
+88.0	27.69	27.92	29.34	29.93
+98.0	27.86	28.10	29.51	30.10
1382+08.0	28.03	28.27	29.69	30.28

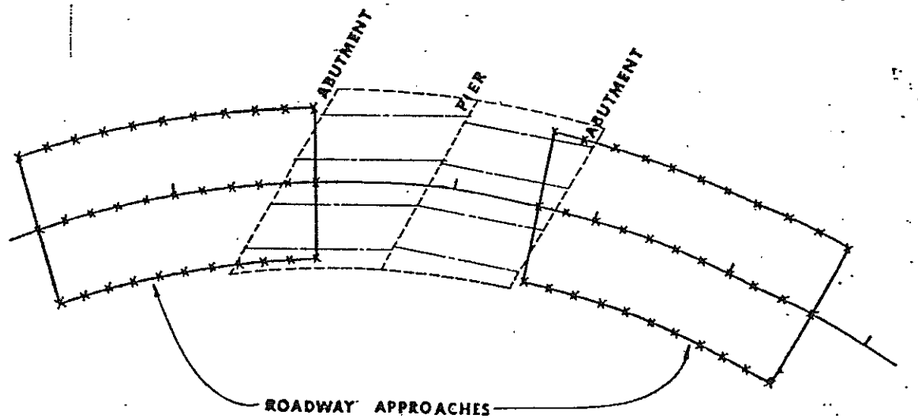

* HORIZONTAL CURVE ALIGNMENT

* THESE DRAWINGS ARE SCHEMATICS ONLY AND DO NOT NECESSARILY REFLECT THE ACTUAL BRIDGE LAYOUT.

INITIAL	DATE
DESIGNED BY	
CHECKED BY	
DETAILED BY	
CHECKED BY	
QUANTITIES BY	
CHECKED BY	

DIVISION OF HIGHWAYS

S.H. 470 OVER YOSEMITE STREET

ROADWAY APPROACHES

Designer D. Horner	Structure	F-17-HL
Detailer	Number	

AS CONSTRUCTED			
NO REVISIONS	8-9-84	REVISED	VOID

FEDERAL ROAD REGION NO.	DIVISION	PROJ. NO.	SHEET NO.	TOTAL SHEETS
VIII	COLORADO	IXFU 470-1 (8)	53	

REVISIONS		

BRIDGE STANDARD 1

ROADWAY APPROACHES

ELEVATIONS ARE AT FINISHED GRADE

STATION	OFFSETS			
	-10.0000	0.0000	24.0000	28.0000
2377+58.0	5821.69	5822.27	5823.68	5823.91
+66.0	21.90	22.49	23.91	24.14
+70.0	22.12	22.71	24.13	24.36
+88.0	22.34	22.93	24.35	24.58
2377+98.0	5822.56	5823.15	5824.57	5824.81
2378+00.0	22.78	23.37	24.79	25.03
+10.0	23.00	23.59	25.01	25.25
+28.0	23.22	23.81	25.23	25.47
2378+38.0	5823.44	5824.03	5825.45	5825.69
+48.0	23.66	24.25	25.67	25.91
+58.0	23.88	24.47	25.89	26.13
+68.0	24.10	24.69	26.11	26.35
2378+78.0	5824.32	5824.91	5826.33	5826.57
+88.0	24.55	25.14	26.55	26.79

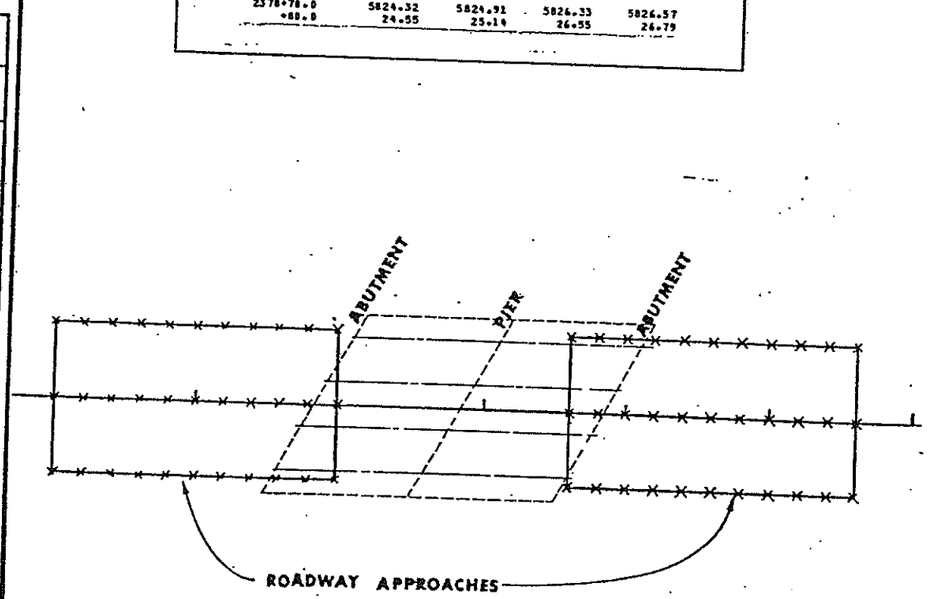

* TANGENT ALIGNMENT

STATION	OFFSETS			
	-10.0000	0.0000	24.0000	28.0000
2380+38.0	5827.59	5828.18	5829.60	5829.83
+48.0	27.77	28.36	29.78	30.01
+58.0	27.95	28.54	29.95	30.19
+68.0	28.12	28.71	30.13	30.36
2380+78.0	5828.29	5828.88	5830.30	5830.53
+88.0	28.46	29.05	30.46	30.70
+98.0	28.62	29.21	30.63	30.86
2381+08.0	28.78	29.37	30.79	31.03
2381+18.0	5828.94	5829.53	5830.95	5831.18
+28.0	29.10	29.69	31.10	31.34
+38.0	29.25	29.84	31.26	31.49
+48.0	29.40	29.99	31.40	31.64
2381+58.0	5829.54	5830.13	5831.55	5831.79
+68.0	29.69	30.28	31.69	31.93
+78.0	29.83	30.42	31.83	32.07
+88.0	29.96	30.55	31.97	32.21

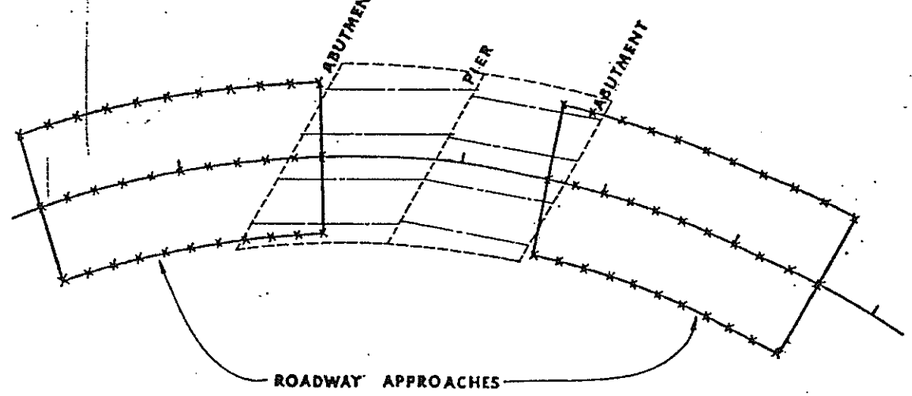

* HORIZONTAL CURVE ALIGNMENT

* THESE DRAWINGS ARE SCHEMATICS ONLY AND DO NOT NECESSARILY REFLECT THE ACTUAL BRIDGE LAYOUT.

DRAWN BY | CHECKED BY | INITIAL
CHECKED BY | QUANTITIES BY | DATE
DETAILED BY | CHECKED BY

DIVISION OF HIGHWAYS

S.H. 470 OVER YOSEMITE STREET

ROADWAY APPROACHES

Designer D. Hornar | Structure

AS CONSTRUCTED			
NO REVISIONS 8-9-84	REVISED	VOID	

FEDERAL ROAD REGION NO.	DIVISION	PROJ. NO.	SHEET NO.	TOTAL SHEETS
VIII	COLORADO	IXEU 270-1(8)	54	

REVISIONS		

BRIDGE STANDARD 103

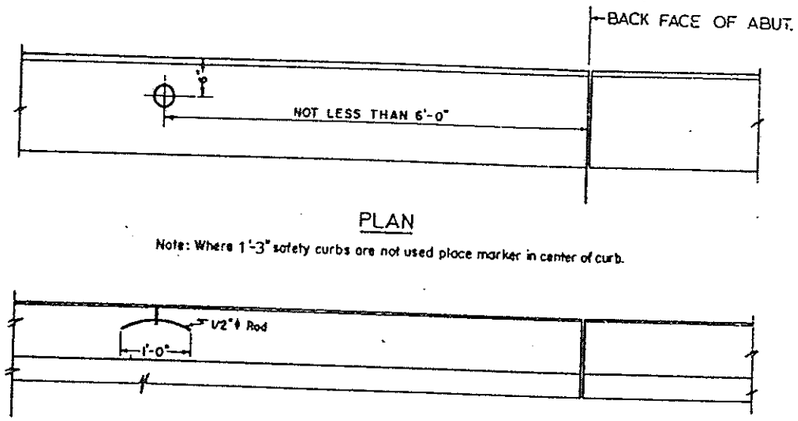

PLAN

Note: Where 1'-3" safety curbs are not used place marker in center of curb.

ELEVATION

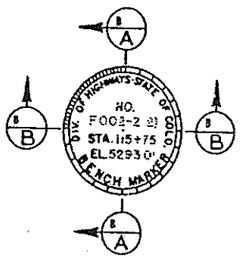

One marker to be placed on Bridges as shown. The station shown on marker shall be the centerline stationing directly opposite the marker.

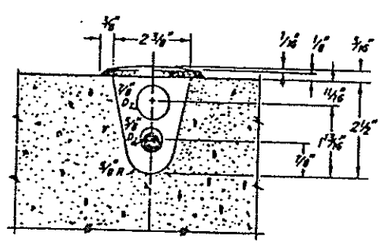

SECTION B/B

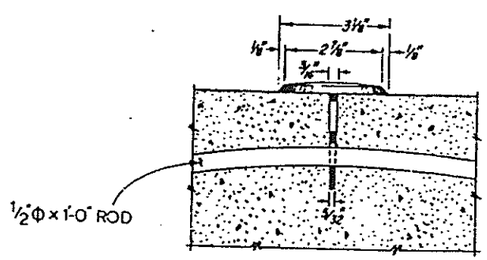

SECTION S/A

BENCH MARK DETAILS

NOTES:

All work shall be done in accordance with Standard Specifications applicable to the project.

All exposed surfaces of the bronze tablet are to be ground to a smooth surface. All letters are to be depressed a minimum of 1/16 inch. Information on the bronze tablet indicated by pin lines is to be stamped in field by the engineering party after marker is placed. 3/16 inch letters and figures to be used. Project designation on tablets shall be properly shown (i.e.; I for Fed. Aid Interstate, F for Fed. Aid Primary, S for Fed. Aid Secondary, etc. & C for State Projects. See details below).

Bronze Bench Mark Tablets will be furnished by the Division at no expense to the Contractor.

Installation of Bronze Bench Mark Tablets will not be paid for directly, but shall be included in the price bid for Concrete

	INITIAL	DATE
DESIGNED BY		
CHECKED BY		
DETAILED BY	BRL	15-82
QUANTITIES BY		
CHECKED BY		

DIVISION OF HIGHWAYS

S.H. 470 OVER YOSEMITE STREET

BENCH MARK

Designer	Structure Numbers F-17-M.L
Detailer	F-17-H.M

AS CONSTRUCTED			
NO REVISIONS 8-7-86	REVISED		VOID

FEDERAL ROAD REGION NO	DIVISION	PROJ. NO.	SHEET NO	TOTAL SHEETS
VIII	COLORADO	IXFU 170-1(8)	55	

REVISIONS		

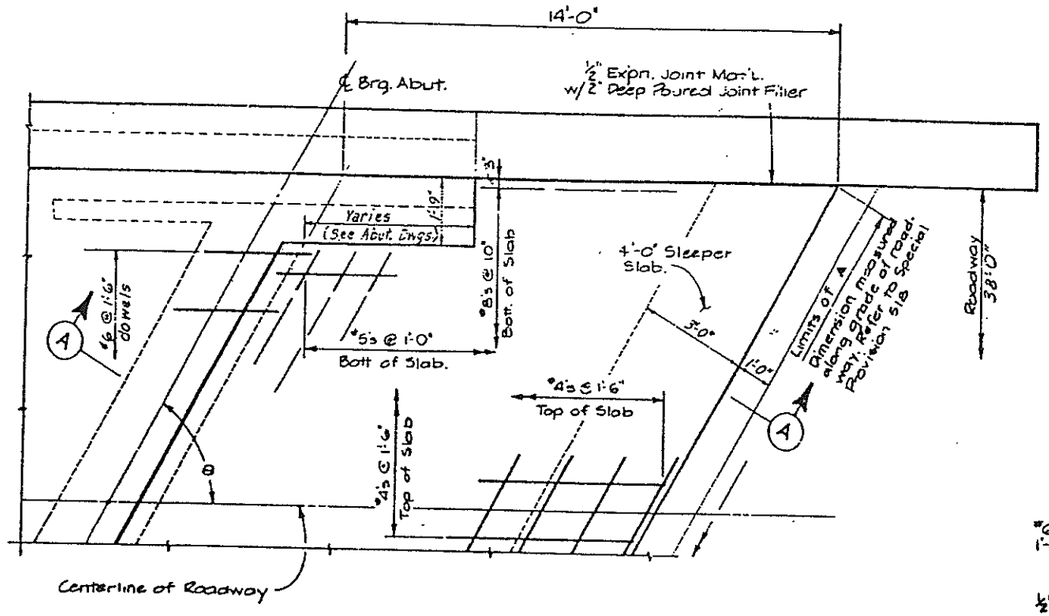

Note: θ varies. See Dwg. No. B-6, 7, 8 & 9. Use Section A with concrete roadway slab.

PLAN

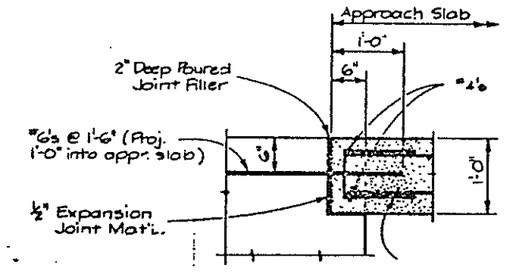

DETAIL "B"

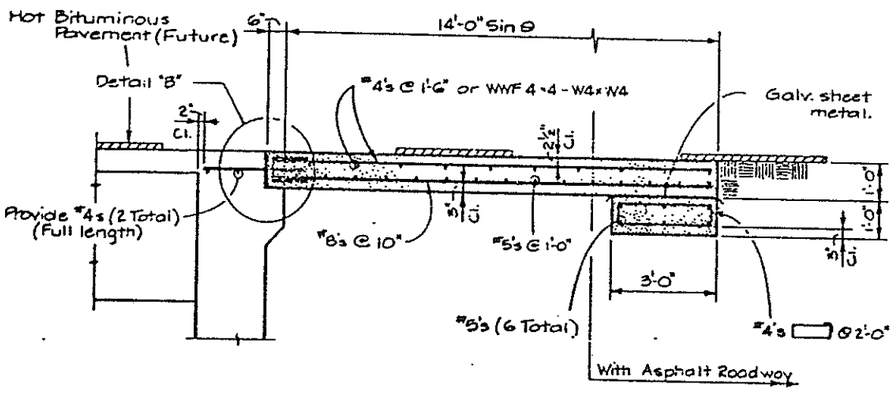

SECTION (A)

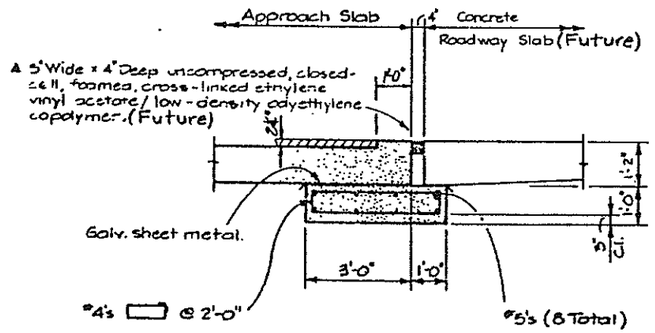

SECTION (A)

With Concrete Roadway Slab.

GENERAL NOTES

Concrete for approach slab may be Class A.

½" Expansion Joint Material, shall meet AASHTO Spec. M 213.

DESIGNED BY	INITIAL	DATE
CHECKED BY	A.I.T.	
DETAILED BY	B.R.L.	1-82

QUANTITIES BY	DATE
CHECKED BY	

DIVISION OF HIGHWAYS

S.H. 470 OVER YOSEMITE STREET

APPROACH SLAB DETAILS

Designer | Structure F-17-L

GENERAL NOTES

EXPANSION JOINT MATERIAL SHALL MEET AASHTO SPECIFICATION M-213.

COLORED STRUCTURAL CONCRETE COATING FINISH WILL BE REQUIRED, AS SHOWN ON THE PLANS, ON EXPOSED CONCRETE SURFACES. THE THE COLORS SHALL BE LIGHT TAN, EQUIVALENT TO FEDERAL STANDARD 595B COLOR NO. 31667, AND DARK TAN, EQUIVALENT TO FEDERAL STANDARD 595B COLOR NO. 30219, AND ARE TO BE SELECTED FROM TEST PANELS PROVIDED BY THE CONTRACTOR.

ALL EXPOSED SURFACES SHALL RECEIVE A CLASS 1 FINAL FINISH TO 1'-0" BELOW GROUND, WHERE APPLICABLE.

REINFORCING STEEL:
- GRADE 60 IS REQUIRED.
- SHALL BE EPOXY COATED UNLESS OTHERWISE NOTED.
- (N) DENOTES NON COATED REINFORCING STEEL.

THE FOLLOWING TABLE GIVES THE MINIMUM LAP SPLICE LENGTH FOR EPOXY COATED REINFORCING BARS PLACED IN ACCORDANCE WITH SUBSECTION 602.06. THESE SPLICE LENGTHS SHALL BE INCREASED BY 25% FOR BARS SPACED AT LESS THAN 6" ON CENTER.

BAR SIZE	#4	#5	#6	#7	#8	#9	#10	#11
SPLICE LENGTH FOR CLASS B CONCRETE	1'-3"	1'-6"	2'-0"	2'-8"	4'-6"	5'-8"	7'-3"	8'-11"

WHEN THE CONTRACTOR ELECTS TO SUBSTITUTE EPOXY COATED REINFORCEMENT FOR BLACK BARS, THE MINIMUM LAP SPLICE SHALL BE AS DESCRIBED ABOVE.

THE FOLLOWING TABLE GIVES THE MINIMUM LAP SPLICE LENGTH FOR BLACK REINFORCING BARS PLACED IN ACCORDANCE WITH SUBSECTION 602.06. THESE SPLICE LENGTHS SHALL BE INCREASED BY 25% FOR BARS SPACED AT LESS THAN 6" ON CENTER.

BAR SIZE	#4	#5	#6	#7	#8	#9	#10	#11
SPLICE LENGTH FOR CLASS B CONCRETE	1'-0"	1'-4"	1'-8"	2'-3"	3'-0"	3'-10"	4'-10"	5'-11"

THE CONTRACTOR SHALL BE RESPONSIBLE FOR THE STABILITY OF THE STRUCTURE DURING CONSTRUCTION.

STATIONS, ELEVATIONS, AND DIMENSIONS CONTAINED IN THESE PLANS ARE CALCULATED FROM A RECENT FIELD SURVEY. THE CONTRACTOR SHALL VERIFY ALL DEPENDENT DIMENSIONS IN THE FIELD BEFORE ORDERING OR FABRICATING ANY MATERIAL.

THE INFORMATION SHOWN ON THESE PLANS CONCERNING THE TYPE AND LOCATION OF EXISTING ABUTMENT PILES IS NOT GUARANTEED TO BE ACCURATE OR ALL INCLUSIVE. THE CONTRACTOR IS RESPONSIBLE FOR MAKING HIS OWN DETERMINATION AS TO THE LOCATION OF THE PILES AS MAY BE NECESSARY TO AVOID DAMAGE THERETO. THE CONTRACTOR SHALL MAINTAIN A 1'-0" CLEAR ZONE BETWEEN THE NAIL DRILL HOLE AND THE PILES. ADDITIONALLY, 1'-6" MIN. FROM CENTER TO CENTER OF NAIL SHALL BE MAINTAINED AT ALL TIMES.

THE INFORMATION SHOWN ON THESE PLANS CONCERNING THE TYPE AND LOCATION OF UNDERGROUND UTILITIES IS NOT GUARANTEED TO BE ACCURATE OR ALL INCLUSIVE. THE CONTRACTOR IS RESPONSIBLE FOR MAKING HIS OWN DETERMINATION AS TO THE TYPE AND LOCATION OF UNDERGROUND UTILITIES AS MAY BE NECESSARY TO AVOID DAMAGE THERETO. THE CONTRACTOR SHALL CONTACT THE UTILITY NOTIFICATION CENTER OF COLORADO AT 1-800-922-1987 AT LEAST 2 DAYS (NOT INCLUDING THE DAY OF NOTIFICATION) PRIOR TO ANY EXCAVATION OR EARTHWORK.

SUMMARY OF QUANTITIES

ITEM	DESCRIPTION	UNIT	WALL
504	SOIL NAIL WALL	SF	3,600
507	CONCRETE SLOPE AND DITCH PAVING (REINFORCED)	CY	10

INDEX OF DRAWINGS

ST1	GENERAL NOTES / SUMMARY OF QUANTITIES
ST2	WALL 2 PLAN
ST3	WALL 2 ELEVATION
ST4	WALL 2 ELEVATION
ST5	WALL 2 DETAILS
ST6	WALL 2 DETAILS

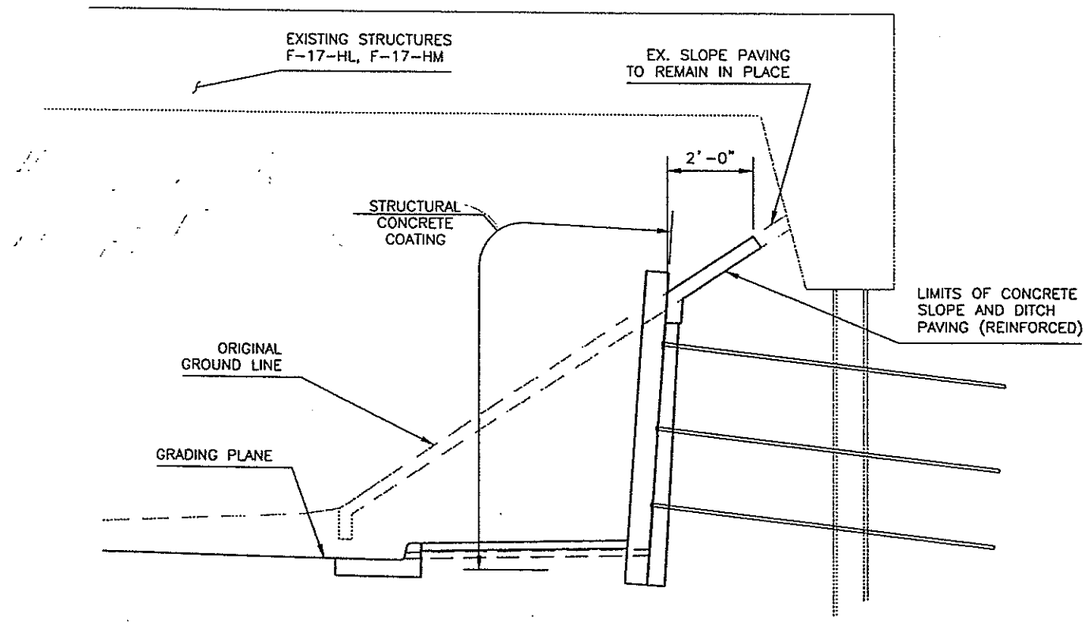

TYPICAL SECTION

DESIGN DATA

1998 AASHTO 2nd EDITION, WITH INTERIMS
LOAD AND RESISTANCE FACTOR DESIGN (LRFD) METHOD

SOIL PARAMETERS: UNIT WEIGHT = 120 lbs/ft^3
FRICTION ANGLE = 35°
Qd = ALLOWABLE PULLOUT RESISTANCE = 1.50 k/ft (TYP.)

REINFORCED CONCRETE AND SHOTCRETE:
CLASS B CONCRETE: f'_c = 3,000 psi
NAIL GROUT : f'_c = 3,000 psi
REINFORCING STEEL: f_y = 60,000 psi

ABBREVIATIONS

L.O.L. = LAYOUT LINE
T.O.W. = TOP OF WALL
F.G.L. = FINISHED GROUND LINE @ FRONT FACE OF WALL
B.O.W. = BOTTOM OF WALL
N.T.S. = NOT TO SCALE
U.N.O. = UNLESS NOTED OTHERWISE

CROSS REFERENCE DRAWING NUMBER
(IF BLANK, REFERENCE IS TO SAME SHEET)
8
SECTION OR DETAIL IDENTIFICATION

05/22/00 at 11:16
10:25 XREF = DCSSTB

Computer File Information		
Creation Date: 04/24/00		Initials: ALC
Last Modification Date: 05/22/00		Initials: ALC
Full Path: L:\4945\dwgs\walls\wall2\		
Drawing File Name: Yosemite Wall 2 Gen Notes.dwg		
Acad Ver. 14	Scale: N.T.S.	Units: ENGLISH

Index of Revisions			
			No Revisions:
			Revised:
			Void:

County Engineer

Date

These contruction plans have been reviewed by Douglas County for improvements only.

Engineering Division Acceptance Block

GENERAL NOTES
SUMMARY OF QUANTITIES

DMJM
DANIEL, MANN, JOHNSON, & MENDENHALL
410 17th Street Suite 300
Denver, Colorado 80202 Fax: (303) 892-1356
Phone: (303) 892-1300

Yosemite Street
Widening at C-470

Detailer:	ALC
Designer:	ALC
Sheet Subset:	STRUCTURE
Subset Sheets:	ST1 of 6
Sheet Number	

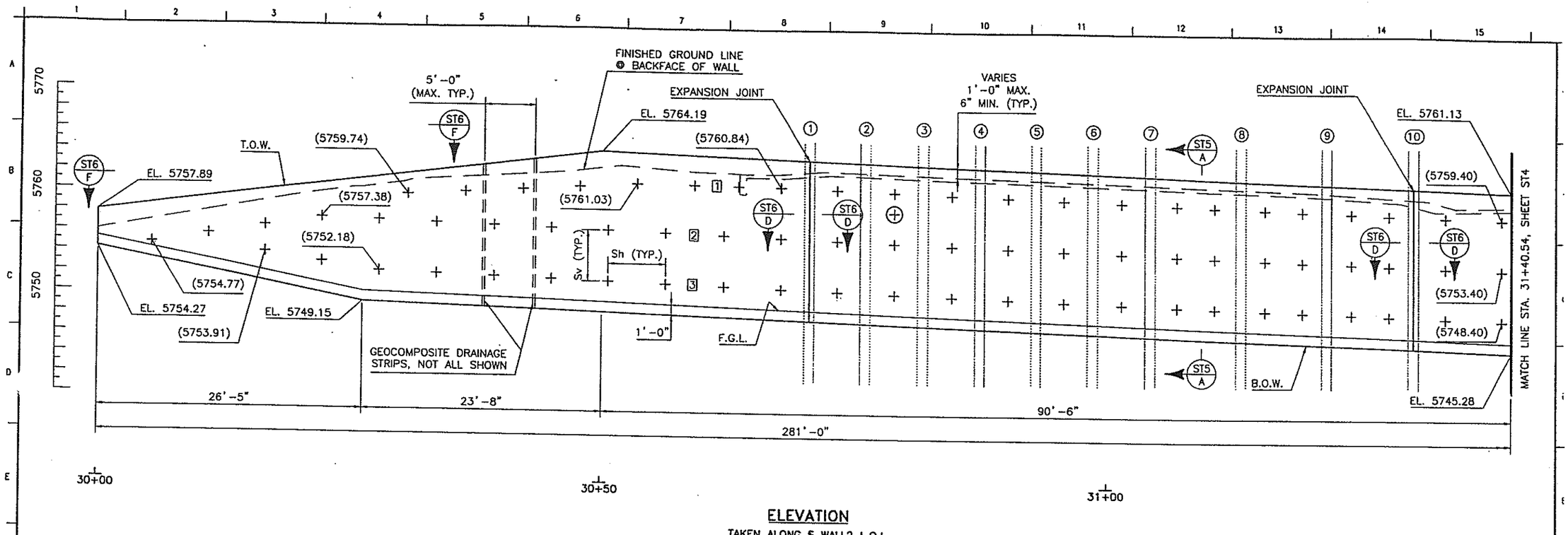

ELEVATION

TAKEN ALONG ℄ WALL2 L.O.L.
(ARCHITECTURAL TREATMENT NOT SHOWN)

NOTES:

1. NAIL ELEVATIONS NOT SHOWN SHALL BE LINEARLY INTERPOLATED BETWEEN THOSE SHOWN.

2. THE EXPANSION JOINT LOCATIONS SHALL BE LOCATED PRIOR TO THE CONSTRUCTION OF SOIL NAILS AND AT LEAST 1'-9" CLEAR SHALL BE PROVIDED BETWEEN THE JOINT AND THE NAILS. SEE SHEET ST5 COMPOSITE STRIP DRAINAGE DETAIL FOR FURTHER INFORMATION.

3. IF REINFORCING BARS WITH CUT THREADS ARE USED FOR NAILS, THE NEXT LARGER BAR SIZE SHOWN ABOVE SHALL BE USED AT NO ADDITIONAL COST.

4. THE DESIGN OF THE SOIL NAILS WAS BASED UPON ENGINEERING GEOLOGY INFORMATION CONTAINED IN THE PLANS. THE CONTRACTOR SHALL VERIFY ALL SOIL CONDITIONS AND THE NAIL DESIGN FOR ADEQUACY PRIOR TO CONSTRUCTION. ANY CHANGES MADE TO THE DESIGN SHALL BE SIGNED BY A LICENSED TECHNICAL ENGINEER AND SUBMITTED TO THE ENGINEER FOR APPROVAL.

CONSTRUCTION SEQUENCE:

1. WALLS SHALL BE BUILT FROM THE TOP DOWN IN ACCORDANCE WITH THE STAGED EXCAVATION LIFTS SHOWN ON SHEET ST5 AND THE SPECIAL PROVISIONS.

2. SLOPE PAVING SHALL BE REMOVED AND REPLACED IN ACCORDANCE WITH THE SLOPE PAVING REPLACEMENT DETAIL ON SHEET ST6 AND THE SPECIAL PROVISIONS.

3. THE FOLLOWING WALL CONSTRUCTION SEQUENCE FOR EACH EXCAVATION LIFT SHALL BE COMPLETE PRIOR TO INITIATING WORK ON THE NEXT EXCAVATION LIFT UNLESS OTHERWISE APPROVED BY THE ENGINEER.

- 3.1. INSTALL PRE-PRODUCTION VERIFICATION TEST NAILS.
- 3.2. EXCAVATE TO STAGE 1 ROUGH GRADE.
- 3.3. TRIM TO FINAL WALL FACE EXCAVATION LINE OR TO STABILIZING BERM (IF USED).
- 3.4. DRILL, INSTALL AND GROUT NAILS, (FOR SPECIAL CONSIDERATION WHEN DRILLING NEAR EXISTING ABUTMENT PILES, SEE GENERAL NOTES). TRIM STABILIZATION BERM (IF USED) TO FINAL WALL FACE EXCAVATION LINE.
- 3.5. INSTALL GEOCOMPOSITE DRAINAGE STRIP.
- 3.6. PLACE REINFORCING AND APPLY SHOTCRETE. NO EXCAVATION WHICH HAS EXPOSED WALL FACE SHALL BE LEFT UNSTABILIZED BY SHOTCRETE AT THE END OF THE WORK DAY UNLESS ENGINEER APPROVES OTHERWISE.
- 3.7. PERFORM NAIL PULLOUT TESTS PER SPECIFICATIONS AFTER SHOTCRETE AND NAIL GROUT HAVE ATTAINED THEIR SPECIFIED STRENGTHS.

4. INSTALL PVC CONNECTOR PIPES DURING CONSTRUCTION OF THE FINAL SHOTCRETE LIFT TO PROVIDE DRAINAGE OF THE GEOCOMPOSITE DRAINAGE STRIP, AS SHOWN ON SHEET ST5.

5. INSTALL CIP FINAL FACING.

LEGEND

+	SOIL NAIL
⊕	VERIFICATION TEST NAIL
[3]	NAIL ROW
(1)	PILE NUMBER
(5750.00)	NAIL ELEVATION
Sh	HORIZONTAL NAIL SPACING = 5'-8" MAX. (TYP.)
Sv	VERTICAL NAIL SPACING = 5'-0" MAX. (TYP.)

Computer File Information		
Creation Date:	04/25/00	Initials: ALC
Last Modification Date:	05/22/00	Initials: ALC
Full Path:	L:\4945\dwgs\walls\wall2\	
Drawing File Name:	Yosemite Wall 2a Elevation.dwg	
Acad Ver. 14	Scale: 1" = 5'-0"	Units: ENGLISH

Index of Revisions

No Revisions:
Revised:
Void:

County Engineer

Date

These contruction plans have been reviewed by Douglas County for improvements only.

Engineering Division Acceptance Block

WALL 2 ELEVATION

DMJM
DANIEL, MANN, JOHNSON, & MENDENHALL
410 17th Street Suite 300
Denver, Colorado 80202
Phone: (303) 892-1300
Fax: (303) 892-1356

Yosemite Street Widening at C-470

Detailer:	ALC
Designer:	ALC
Sheet Subset:	STRUCTURE
Subset Sheets:	ST3 of 6
Sheet Number	

05/22/00 at 10:19
10:19 XREF = DCSSTB YOSWORK2

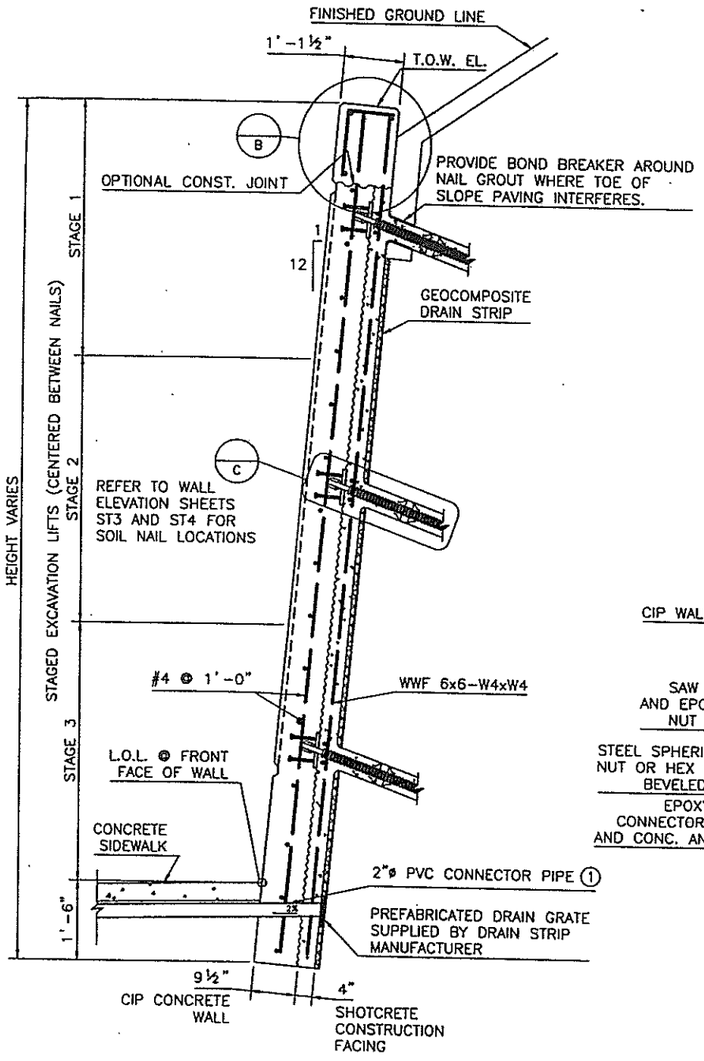

TYPICAL SECTION (ST3 A) (ST4 A)
¾" = 1'-0"

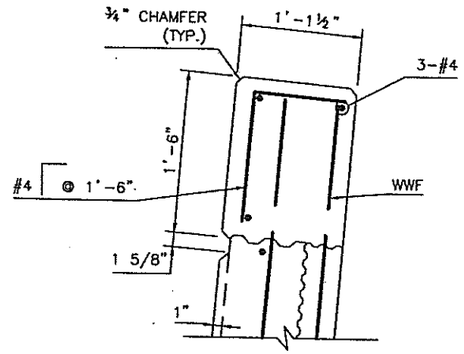

TYP. WALL CAP DETAIL (B)
1½" = 1'-0"

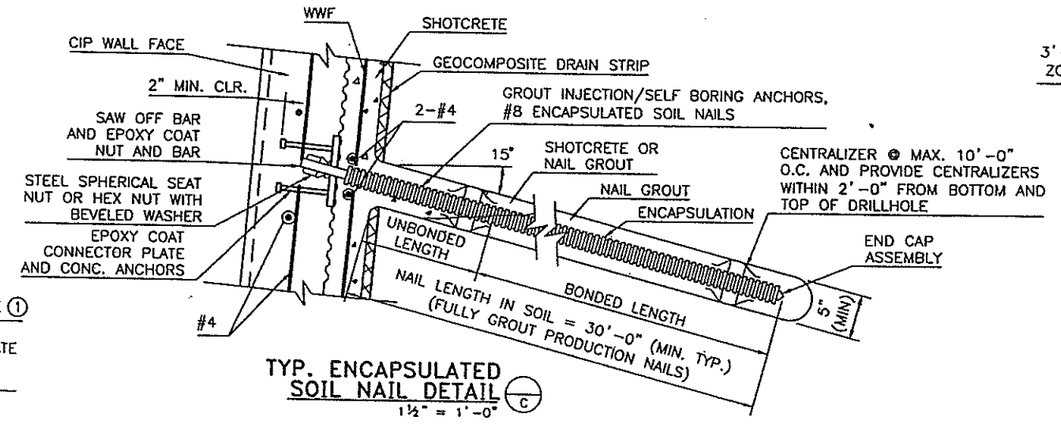

TYP. ENCAPSULATED SOIL NAIL DETAIL (C)
1½" = 1'-0"

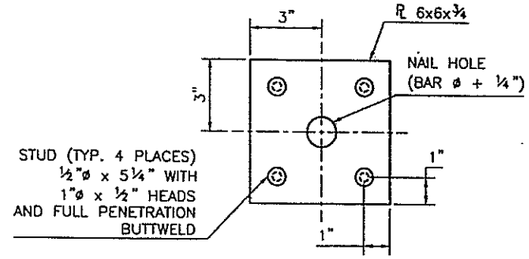

CONNECTOR PLATE
(WITH STUD DETAIL) N.T.S.

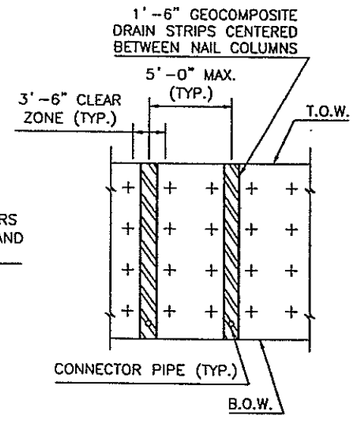

GEOCOMPOSITE DRAINAGE STRIP DETAIL
N.T.S.

KEY NOTE:

① PLACE DRAIN PIPE IN CURB OF CURB AND GUTTER.

Computer File Information			Index of Revisions		
Creation Date:	04/24/00	Initials: ALC			
Last Modification Date:	05/19/00	Initials: ALC			
Full Path:	L:\4945\dwgs\walls\wall2\				
Drawing File Name:	Yosemite Wall 2 Details 1.dwg				
Acad Ver. 14	Scale: AS NOTED	Units: ENGLISH			

No Revisions:
Revised:
Void:

County Engineer

Date

These contruction plans have been reviewed by Douglas County for improvements only.

Engineering Division Acceptance Block

WALL 2 DETAILS

DMJM
DANIEL, MANN, JOHNSON, & MENDENHALL
410 17th Street Suite 300
Denver, Colorado 80202
Phone: (303) 892-1300
Fax: (303) 892-1358

Yosemite Street Widening at C-470

Detailer:	ALC
Designer:	ALC
Sheet Subset:	STRUCTURE
Subset Sheets:	ST5 of 6
Sheet Number	

05/19/00 at 16:48
13:41 XREF = DCPLTB