Oversight/NHS		
FHWA REGION VIII OVERSIGHT?	☒NO	☐YES
NATIONAL HIGHWAY SYSTEM?	☐NO	☒YES

DEPARTMENT OF TRANSPORTATION
STATE OF COLORADO

HIGHWAY CONSTRUCTION BID PLANS OF PROPOSED

FEDERAL AID PROJECT NO. STA 4701-104

STATE HIGHWAY 470

JEFFERSON COUNTY

CONSTRUCTION PROJECT CODE NO. 14235

MP 10.644-13.873
STA 4701-104
Ken Caryl to Wadsworth

Related Projects:
P. E. UNDER PROJECT:
Project Number
Project Code

36

R.O.W. Projects:
R.O.W Project Description:

STATION	ROADWAY FEET	STRUCTURES FEET
STA. 595+00 BEGIN STA. 4701-104 (M.P. 10.6)		
STA. 689+44 KIPLING PARKWAY BEGIN STRUCTURES F-16-MC, F-16-MD	9,444	
STA. 691+44 KIPLING PARKWAY END STRUCTURES F-16-MC, F-16-MD	200	* 200
STA. 765+68 SH121-WADSWORTH BLVD BEGIN STRUCTURES F-16-MG, F-16-MH		* 293
STA. 765+68 END STA. 4701-104 (M.P. 13.83)	7,424	
TOTAL	17,068	* 493
SUMMARY	FEET	MILES
ROADWAY NET LENGTH	17,068	3.233
PROJECT GROSS LENGTH	17,068	3.233

2012 DESIGN TRAFFIC VOLUME
ADT = 61,505
DHV = 5,591
% TRUCKS = 6

* FOR INFORMATION ONLY

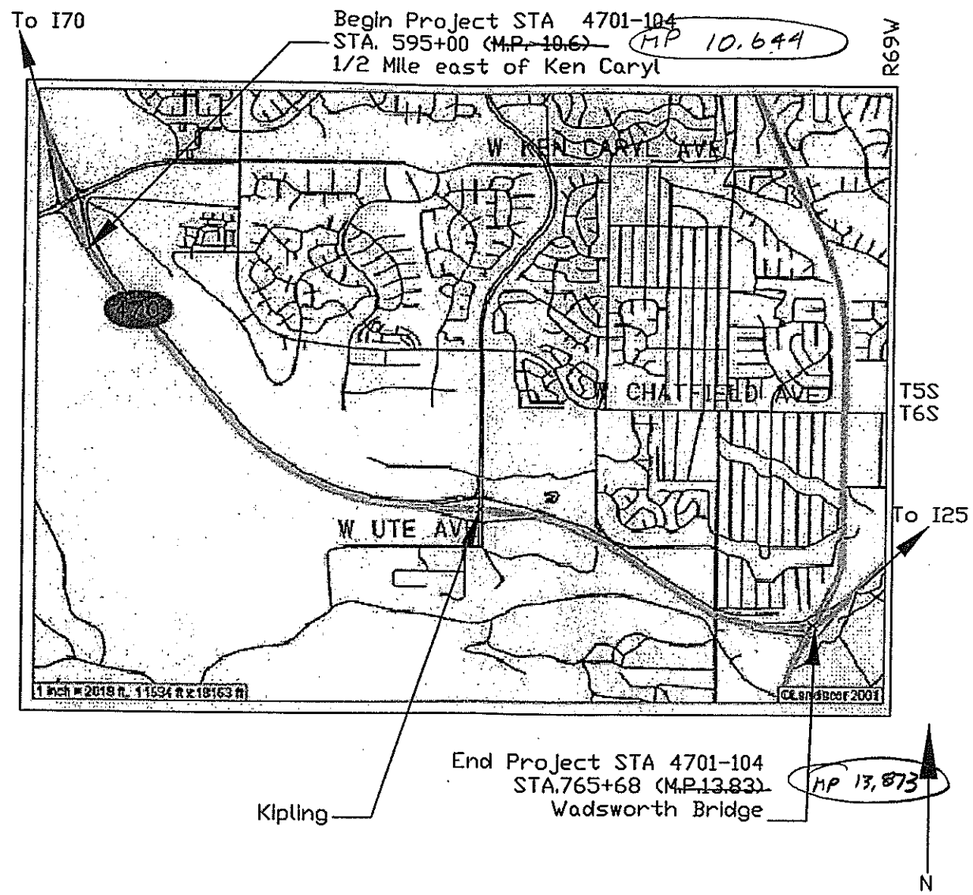

SHEET NO.	INDEX OF SHEETS
1	TITLE SHEET
2	STANDARD PLAN LIST
3	GENERAL NOTES
4	STORMWATER MANAGEMENT PLAN
5-10	TYPICAL SECTIONS
11-13	SUMMARY OF APPROXIMATE QUANTITIES
14-15	SURFACING PLAN TABULATION
16	PAVEMENT DESIGN CRITERIA & ROADWAY SMOOTHNESS
17	TABULATION OF GUARDRAIL
18	TABULATION OF FENCE, DELINEATORS & SIDEWALK
19	EARTHWORK TABULATION & QUANTITIES BALANCE
20	GUARDRAILTYPE 4 DETAIL
21	SAW AND SEALING BRIDGE JOINT
22	SURVEY TABULATION
23-28	ROADWAY ALIGNMENT
29	TABULATION OF TRAFFIC CONTROL DEVICES
30	TABULATION OF PAVEMENT MARKINGS
31	SIGNING TABULATION SHEET
32	MOBILE PAVEMENT MARKING
33-45	SIGNING AND STRIPING PLAN SHEETS
46-49	GROUND MOUNTED SIGN SUPPORT DETAIL

AWARD

NEW & REVISED STANDARDS

S-614-2 CLASS I GROUND SIGN INSTALLATION 1 SHEET (AUG. 22, 2002)

Computer File Information			
Creation Date:	8/6/02	Initials: JRE	
Last Modification Date:	12/11/02	Initials: JRE	
Full Path:		C:\14235\Plans	
Drawing File Name:		Title Sheet01.dwt	
Acad Ver.:15.06s (LMS Tech)	Scale: 1:1	Units: ENGLISH	

(R-1) (R-2) (R-3) (R-4) (R-5)

Sheet Revisions

Colorado Department of Transportation
CDOT
8833 South Wadsworth Ct.
Littleton, Colorado 80128
Phone: (303) 972-9112 FAX:(303) 972-9114
Region 6 South Area RLB

As Constructed
No Revisions:
Revised:
Void:

Title Sheet

Designer: JRE
Detailer: JRE
Sheet Subset:
Subset Sheets: 1 of 1

Project No./Code
STA 4701-104
14235
Sheet Number 1

THIS PROJECT CONSISTS OF ASPHALT OVERLAYING WITH HOT BITUMINOUS PAVEMENT AS SHOWN ON THE TYPICAL SECTIONS, ON S.H. C 470. THE PROJECT EXTENDS FROM APPROXIMATELY KEN CARYL AVE. ON THE WEST TO WADSWORTH BLVD. ON THE EAST.

THE PROJECT ALSO INCLUDES REMOVING AND INSTALLING GUARDRAIL, TRAFFIC CONTROL, SIGNING AND STRIPING, AND OTHER MISCELLANEOUS ITEMS AS SHOWN IN THE PLANS AND AS DIRECTED BY THE ENGINEER.

A 2 INCH OVERLAY IS TO BE PLACED FROM EXISTING EDGE OF OIL TO EXISTING EDGE OF OIL INCLUDING SPEED CHANGE LANES, RAMPS AND MEDIAN OPENINGS. THE OVERLAY SHALL BE "FEATHERED" TO MATCH ALL BITUMINOUS SURFACED TIE-INS AS SHOWN ON THE TYPICAL SECTIONS OR AS DIRECTED BY THE ENGINEER.

PRIOR TO PLACING THE OVERLAY, THE FOLLOWING WORK SHALL BE COMPLETED AS DIRECTED BY THE ENGINEER.

1. REMOVAL OF ASPHALT MAT (PLANING) WILL BE REQUIRED FOR LEVELING THE WESTBOUND WADSWORTH BLVD. ONRAMP, FROM STA. 736+73 LT TO 757+85 LT AND AT THE KIPLING PKWY BRIDGE, STR. F-16-MC & F-16-MD, FROM STA. 689+44 TO 691+44.
   MICRO SURFACING SEAL COAT WILL BE PLACED FROM STA. 595+00 TO 765+68.

2. A TACK COAT OF DILUTED EMULSIFIED ASPHALT (SLOW-SETTING) SHALL BE APPLIED FOR THE WIDTH OF THE OVERLAY.

STATIONS ARE APPROXIMATE. STATION TO STATION DESIGNATIONS ARE FOR LOCATION ONLY AND MAY NOT CORRESPOND TO PAY LENGTHS. SEE TABULATIONS AND M&S STANDARDS FOR PAY LENGTHS.

FOR PRELIMINARY PLAN QUANTITIES OF ROADWAY MATERIALS, THE FOLLOWING RATES OF APPLICATION WERE USED:

BITUMINOUS PAVEMENT _____ @ 110lbs PER SQUARE YARD PER INCH THICKNESS

TACK COAT DILUTED EMULSIFIED ASPHALT (SLOW-SETTING) ____ @ 0.1 GALLON PER SQUARE YARD (DILUTED)

DILUTED EMULSIFIED ASPHALT FOR TACK COAT SHALL CONSIST OF 1 PART EMULSIFIED ASPHALT AND 1 PART WATER OR AS DIRECTED BY THE ENGINEER.

WATER SHALL BE USED AS A DUST PALLIATIVE WHERE REQUIRED. LOCATIONS SHALL BE AS ORDERED BY CDOT PERSONNEL AND NOT BE PAID FOR SEPARATELY, BUT SHALL BE INCLUDED IN THE WORK.

ANY LAYER OF BITUMINOUS PAVEMENT THAT IS TO HAVE A SUCCEEDING LAYER PLACED THEREON SHALL BE COMPLETED FULL WIDTH BEFORE SUCCEEDING LAYER IS PLACED. WHEN MORE THEN ONE LIFT OF BITUMINOUS PAVEMENT IS BEING PLACED, LONGITUDINAL JOINTS FORMED BY ADJACENT PASSES SHALL BE OFFSET BY A MINIMUM OF SIX INCHES BETWEEN LIFTS.

WHERE EXISTING ASPHALT PAVEMENT IS WIDENED OR REMOVED, THE CUTTING SHALL BE DONE TO A NEAT WORKLINE WITH A PAVEMENT CUTTING SAW OR OTHER METHOD AS APPROVED BY THE ENGINEER. THIS WORK WILL NOT BE PAID FOR SEPARATELY BUT SHALL BE CONSIDERED AS SUBSIDIARY TO THE SURFACING WORK.

ALL ROTO-MILLINGS AND REMOVED ASPHALT MAT SHALL BECOME THE PROPERTY OF CDOT MAINTENANCE AND WILL BE DELIVERED TO THE MAINTENANCE YARD AT C-470 AND SANTA FE DR. COORDINATE WITH TED MARTINEZ/CDOT MAINTENANCE AT 303-757-9514

AN ORIGINAL SURVEY WAS NOT CONDUCTED FOR THIS PROJECT. ASPHALT PAVING QUANTITIES WERE CALCULATED FROM AIR PHOTO'S NOT FROM STATIONING. THE CONTRACTOR IS RESPONSIBLE FOR VERIFYING ALL HORIZONTAL AND VERTICAL LOCATIONS OF EXISTING AND PROPOSED FEATURES.

EXISTING CURB AND GUTTER, OTHER THAN PLANNED REMOVAL, WHICH IS DAMAGED OR DISTURBED AS A RESULT OF THE CONTRACTOR'S OPERATIONS SHALL BE REPLACED IN KIND AT THE CONTRACTOR'S EXPENSE.

As Constructed
No Revisions:
Revised:
Void:

IT IS SUGGESTED THAT THE CONTRACTOR INITIATE A REQUEST TO XCEL ENERGY FOR ANY CONSTRUCTION RELATED TEMPORARY ELECTRICAL POWER SOURCES AS SOON AS POSSIBLE BY CALLING 303-571-3505.

THE CONTRACTOR SHALL LIMIT CONSTRUCTION ACTIVITIES TO THOSE AREAS WITHIN THE LIMITS OF DISTURBANCE. ANY DISTURBANCE BEYOND THESE LIMITS SHALL BE RESTORED TO THE ORIGINAL CONDITION BY THE CONTRACTOR AT HIS OWN EXPENSE. CONSTRUCTION ACTIVITIES, IN ADDITION TO NORMAL CONSTRUCTION PROCEDURES, SHALL INCLUDE PARKING OF VEHICLES OR EQUIPMENT, DISPOSAL OF LITTER, AND ANY OTHER ACTION WHICH ALTERS EXISTING CONDITIONS.

DISPOSAL OF EXCESS MATERIAL OFF-SITE, REGARDLESS OF PROPERTY OWNERSHIP, MUST BE DONE IN ACCORDANCE WITH ALL FEDERAL, STATE, AND LOCAL ENVIRONMENTAL REGULATIONS AND THE CDOT PRAIRIE DOG POLICY. IF THE CONTRACTOR HAS ANY QUESTIONS ABOUT WHETHER OR NOT THEY ARE IN COMPLIANCE, THEY SHOULD CALL THE REGION 6 ENVIRONMENTAL MANAGER AT (303) 757-9930 PRIOR TO REMOVAL AND DISPOSAL OF THE MATERIAL.

ALL ASPHALT PAVEMENT SHALL MEET THE REQUIREMENTS OF ASPHALT PAVEMENT SMOOTHNESS PERCENT IMPROVEMENT AS STATED IN THE STANDARD SPECIFICATIONS.

ALL RANGE POINTS, TIES, BENCHMARKS, OR OTHER SURVEY CONTROL POINTS WHICH MAY BE ENCOUNTERED DURING CONSTRUCTION MUST BE PRESERVED.

THE CONTRACTOR SHALL CALL REGION 6 RIGHT-OF-WAY / SURVEY AT (303) 757-9922 AT LEAST 2 WEEKS PRIOR TO ANY CONSTRUCTION ACTIVITY WHICH MAY DAMAGE SURVEY MONUMENTS. REGION 6 RIGHT-OF-WAY / SURVEY WILL BE RESPONSIBLE FOR RELOCATING ANY CONTROL MONUMENTS. ANY NON-REPORTED DAMAGE TO THE CONTROL MONUMENTS WILL BE PAID FOR BY THE CONTRACTOR.

IT IS ESTIMATED THAT 30 HOURS OF POTHOLING WILL BE REQUIRED FOR THIS PROJECT.

IT IS ESTIMATED THAT 150 HOURS OF BLADING, WITH A MOTOR GRADER IN THE 75 TO 150 HORSEPOWER RANGE, WILL BE REQUIRED AT LOCATIONS AS SHOWN IN THE PLANS OR DIRECTED BY THE ENGINEER. BLADING IS ALSO REQUIRED AROUND ALL NEW AND EXISTING GUARDRAIL, OR AS DIRECTED BY THE ENGINEER, TO ASSURE GUARDRAIL IS AT THE PROPER HEIGHT.

ALL TYPE 3 GUARDRAIL, AND END ANCHORS, SHALL BE GALVANIZED STEEL WITH WOOD POSTS.

ALL NEW CONCRETE BARRIER TYPE 4 SHALL RECEIVE STRUCTURAL CONCRETE COATING TO MATCH THE EXISTING BARRIER. THE COST WILL NOT BE PAID FOR SEPARATELY BUT INCLUDED IN THE COST OF THE BARRIER.

THE TYPE OF COMPACTION FOR SOILS ON THIS PROJECT SHALL BE AASHTO T99.

DEPTH OF MOISTURE-DENSITY CONTROL FOR THIS PROJECT SHALL BE AS FOLLOWS:

FULL DEPTH OF ALL EMBANKMENTS
BASES OF CUTS AND FILLS - 6 INCHES.

WHILE REMOVING THE EXISTING HBP FROM STRUCTURES AS PER THE REQUIREMENTS ON THIS PROJECT, CARE MUST BE TAKEN TO INSURE THAT THE EXISTING WATERPROOFING MEMBRANE ON THE DECKS ARE NOT DAMAGED. IF THE EXISTING WATERPROOFING MEMBRANES ARE DAMAGED, IT MUST BE REPLACED BY THE CONTRACTOR AT NO COST TO THE PROJECT.

SAW CUT AND SEAL THE BRIDGE JOINTS AT STRUCTURES (F-16-MC), AND (F-16-MD). PAID AS SAWING AND SEALING BRIDGE JOINT.

EROSION CONTROL MEASURES MUST BE IMPLEMENTED BEFORE CONSTRUCTION AND GRADING OPERATIONS BEGIN.

PLACED TOPSOIL SHALL BE AS SHOWN ON THE TYPICAL SECTIONS. IF THE TOPSOIL IS NOT GENERATED WITHIN THE PROJECT LIMITS, IT SHALL BE TREATED WITH AN HERBICIDE APPLICATION AFTER PLACEMENT AND BEFORE NATIVE SEEDING. HERBICIDE TREATMENT SHALL BE PERFORMED BY A LICENCED HERBICIDE APPLICATOR AND SHALL BE INCLUDED IN THE COST OF SEEDING (NATIVE).

ALL CONSTRUCTION EQUIPMENT IS TO REMAIN ON THE ROAD SURFACE AT ALL TIMES. ANY STAGING AREA MUST BE IDENTIFIED ON THE PLAN SHEETS PRIOR TO AD DATE TO ENSURE NO ENVIRONMENTAL IMPACTS. FENCE (PLASTIC) SHOULD BE PLACED FROM THE CORNERS OF ALL BRIDGES OVER CREEKS OR DRAINAGE DITCHES DOWN THE EMBANKMENT TO R.O.W. TEN (10) WORKING DAYS PRIOR TO CONSTRUCTION CONTACT RICK WILLARD @ REGION 6 ENVIRONMENTAL (303) 757-9304 TO FLAG THE WETLANDS.FENCE (PLASTIC) TO BE INSTALLED AROUND WETLANDS TO PREVENT DAMAGE. ALTERNATE ROUTES MUST BE PROVIDED. IT IS ESTIMATED THAT 400 LIN FT OF FENCE (PLASTIC) WILL BE REQUIRED FOR THIS PROJECT. LOCATIONS SHALL BE AS DIRECTED BY THE ENGINEER.

Computer File Information		
Creation Date: 8/6/02	Initials: JRE	
Last Modification Date: 12/11/02	Initials: JRE	
Full Path:	C:\14235\Plans	
Drawing File Name:	GEN00101.dwt	
Acad Ver.: 15.06s (LMS Tech)	Scale: 1:1	Units: ENGLISH

	Sheet Revisions		
(R-1)			
(R-2)			
(R-3)			
(R-4)			
(R-5)			

Colorado Department of Transportation
8833 South Wadsworth Ct.
Littleton, Colorado 80128
Phone: (303) 972-9112 FAX: (303) 972-9114
Region 6 South Area RLB

As Constructed
No Revisions:
Revised:
Void:

General Notes

Designer: JRE
Detailer: JRE
Sheet Subset:
Subset Sheets: 1 of 1

Project No./Code
STA 4701-104
14235
Sheet Number 3

As Constructed
No Revisions:
Revised:
Void:

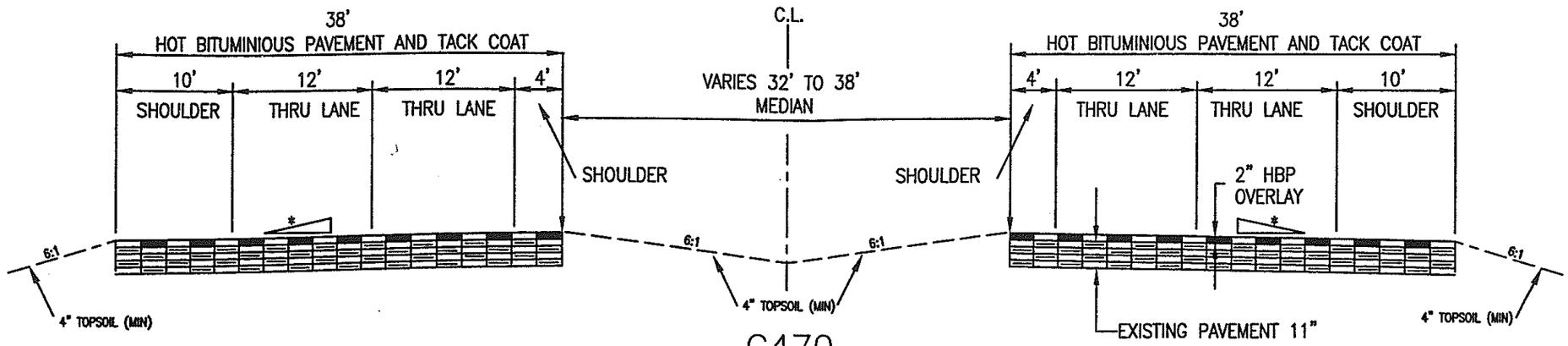

C470

Sta. 598+50 to 667+58
Sta. 680+28 to 689+44
Sta. 691+44 to 701+05
Sta. 717+19 to 736+73
Sta. 754+14 to 765+68

*MATCH EXISTING CROSS SLOPE
NOTE: NO PLANING. PLACE MICRO SURFACING SEAL TO LEVEL ROADWAY RUTS.

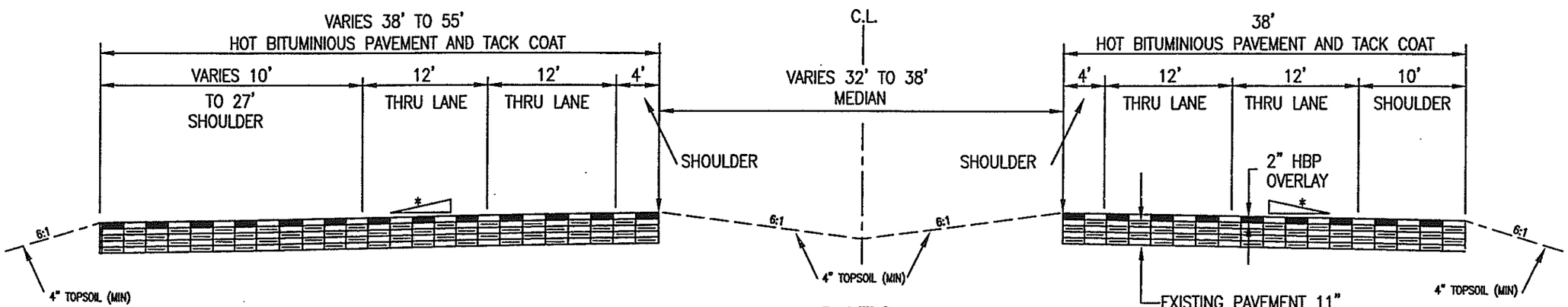

C470

Sta. 595+00 to 598+50
Sta. 708+95 to 717+19

*MATCH EXISTING CROSS SLOPE
NOTE: NO PLANING. PLACE MICRO SURFACING SEAL TO LEVEL ROADWAY RUTS.

Computer File Information			
Creation Date:	8/8/02	Initials: JRE	(R-1)
Last Modification Date:	12/04/02	Initials: JRE	(R-2)
Full Path:		C:\14235\Plans	(R-3)
Drawing File Name:		RDTY0101.dwt	(R-4)
Acad Ver.: 15.06s (LMS Tech)	Scale: 1:1	Units: ENGLISH	(R-5)

Sheet Revisions

Colorado Department of Transportation
DOT
8833 South Wadsworth Ct.
Littleton, Colorado 80128
Phone: (303) 972-9112 FAX: (303) 972-9114
Region 6 South Area RLB

As Constructed
No Revisions:
Revised:
Void:

TYPICAL SECTIONS

Designer: JRE
Detailer: JRE
Sheet Subset:
Subset Sheets: 1 of 6

Project No./Code
STA 4701-104
14235
Sheet Number 5

As Constructed
No Revisions:
Revised:
Void:

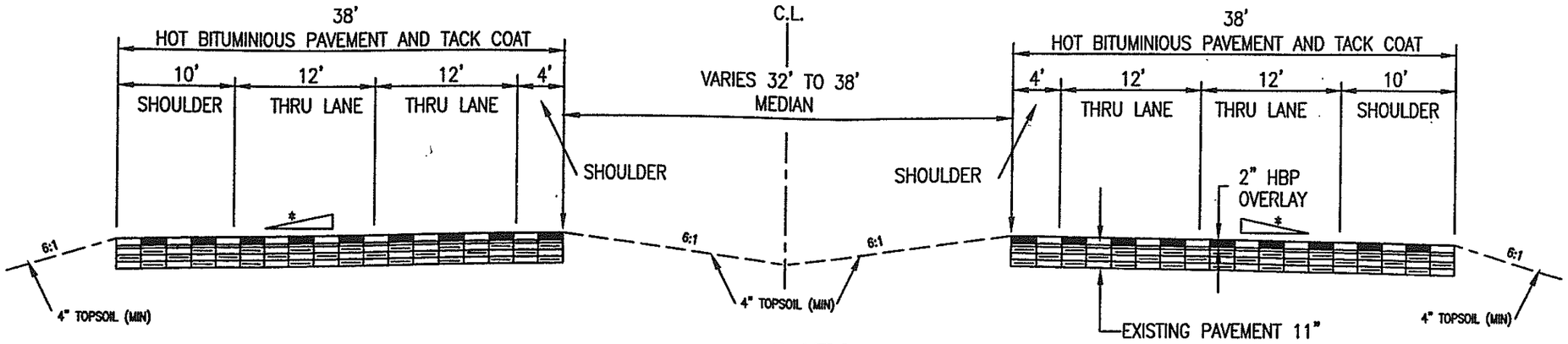

C470

Sta. 689+44 to 691+44
(Kipling Pkwy Bridge)

*MATCH EXISTING CROSS SLOPE
NOTE: EXISTING PAVEMENT TO BE PLANED TO A DEPTH OF 1".

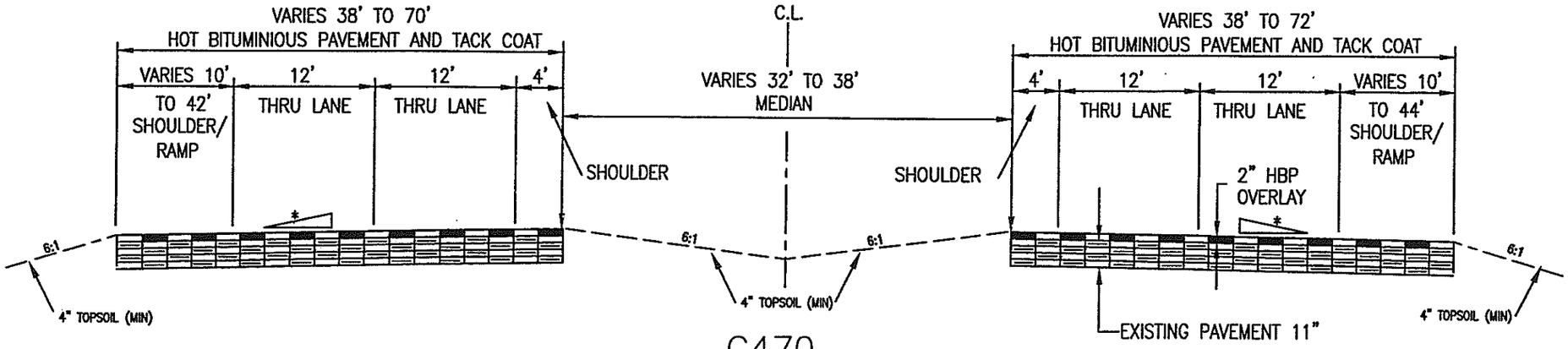

C470

Sta. 667+58 to 680+28

*MATCH EXISTING CROSS SLOPE
NOTE: NO PLANING. PLACE MICRO SURFACING SEAL TO LEVEL ROADWAY RUTS.

Computer File Information			
Creation Date:	9/4/02	Initials: JRE	(R-1)
Last Modification Date:	12/04/02	Initials: JRE	(R-2)
Full Path:		C:\14235\Plans	(R-3)
Drawing File Name:		RDTY0201.dwt	(R-4)
Acad Ver.: 15.06s (LMS Tech)	Scale: 1:1	Units: ENGLISH	(R-5)

Sheet Revisions		

Colorado Department of Transportation
DOT
8833 South Wadsworth Ct.
Littleton, Colorado 80128
Phone: (303) 972-9112 FAX: (303) 972-9114
Region 6 South Area RLB

As Constructed
No Revisions:
Revised:
Void:

TYPICAL SECTIONS

Designer: JRE
Detailer: JRE
Sheet Subset:
Subset Sheets: 2 of 6

Project No./Code
STA 4701-104
14235
Sheet Number 6

As Constructed
No Revisions:
Revised:
Void:

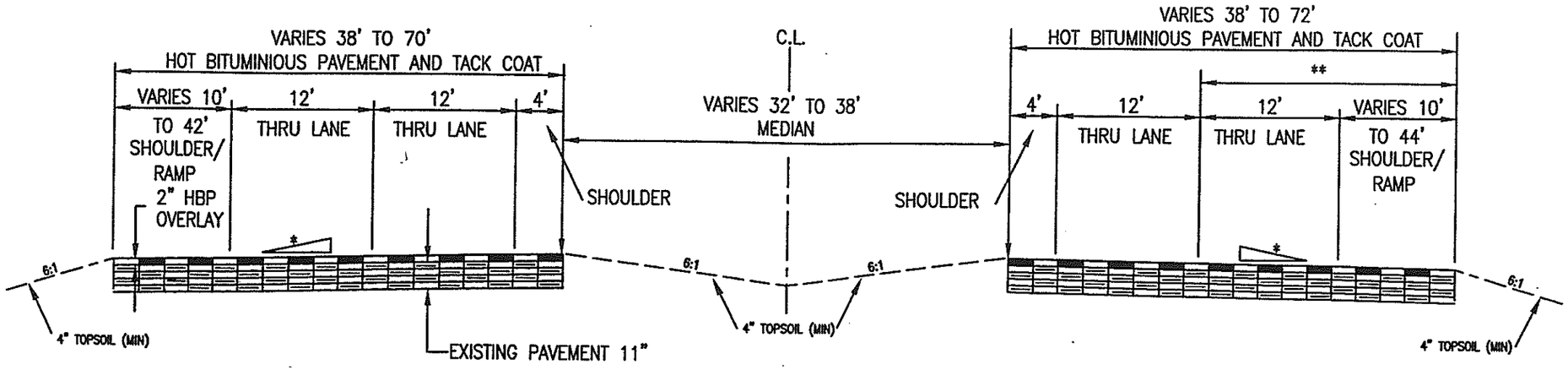

C470

Sta. 736+73 to 754+14

*MATCH EXISTING CROSS SLOPE
NOTE: PLACE MICRO SURFACING SEAL TO LEVEL ROADWAY RUTS EXCEPT WHERE PLANING IS SPECIFIED.
** EXISTING PAVMENT TO BE PLANED TO A DEPTH OF 2" FOR LEVELING COARSE, AS DESIGNATED BY THE ENGINEER.

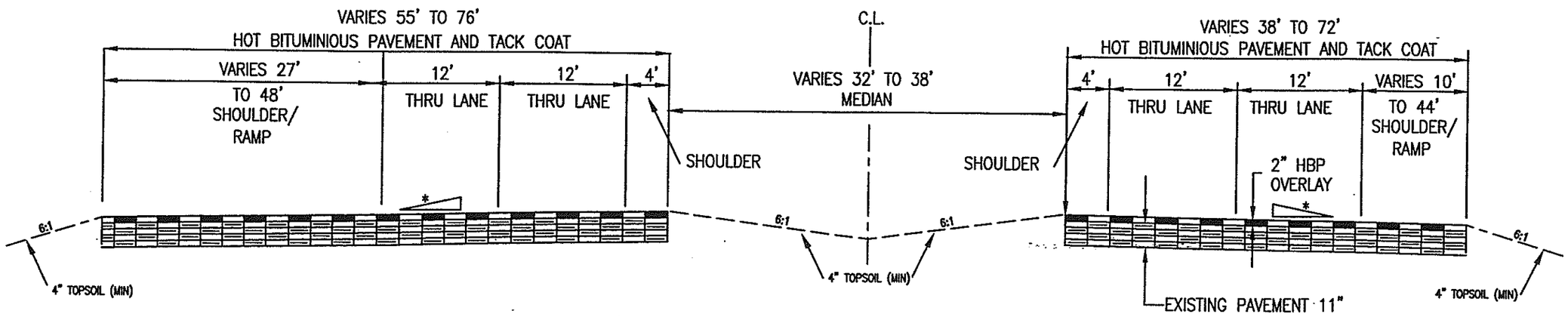

C470

Sta. 701+05 to 708+95

*MATCH EXISTING CROSS SLOPE
NOTE: NO PLANING. PLACE MICRO SURFACING SEAL TO LEVEL ROADWAY RUTS.

Computer File Information			
Creation Date:	9/4/02	Initials: JRE	(R-1)
Last Modification Date:	12/04/02	Initials: JRE	(R-2)
Full Path:		C:\14235\Plans	(R-3)
Drawing File Name:		RDTY0301.dwt	(R-4)
Acad Ver.: 15.06s (LMS Tech)	Scale: 1:1	Units: ENGLISH	(R-5)

Sheet Revisions

Colorado Department of Transportation
DOT
8833 South Wadsworth Ct.
Littleton, Colorado 80128
Phone: (303) 972-9112 FAX: (303) 972-9114
Region 6 South Area RLB

As Constructed
No Revisions:
Revised:
Void:

TYPICAL SECTIONS

Designer: JRE
Detailer: JRE
Sheet Subset:
Subset Sheets: 3 of 6

Project No./Code
STA 4701-104
14235
Sheet Number 7

As Constructed
No Revisions:
Revised:
Void:

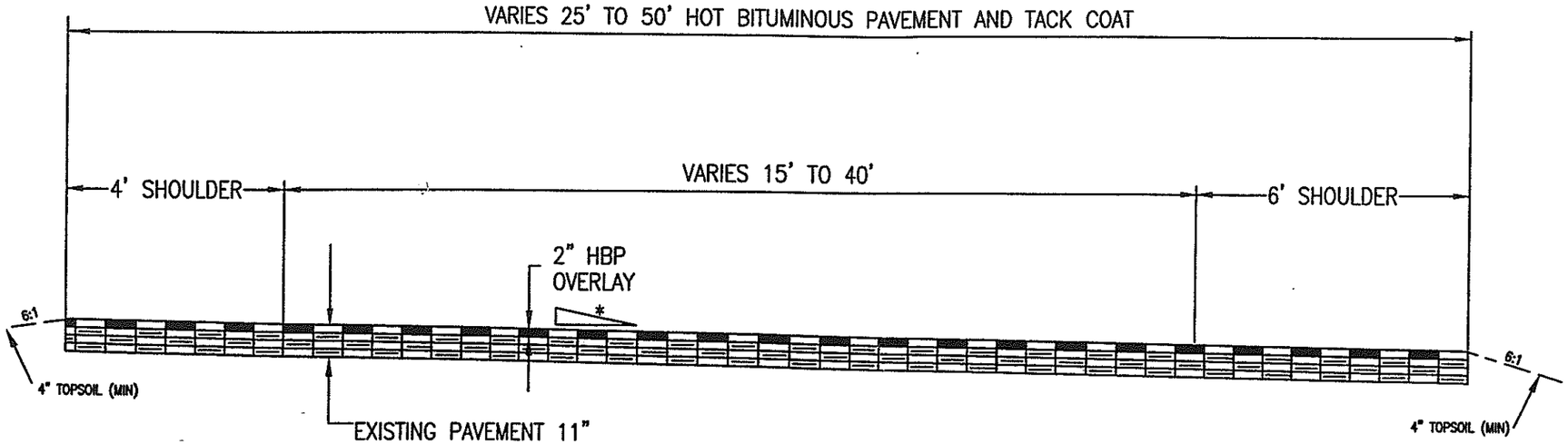

*MATCH EXISTING CROSS SLOPE
NOTE: EXISTING PAVEMENT TO BE PLANED TO A DEPTH OF 2".

WEST BOUND

RAMP E Sta. 754+14 to 757+85

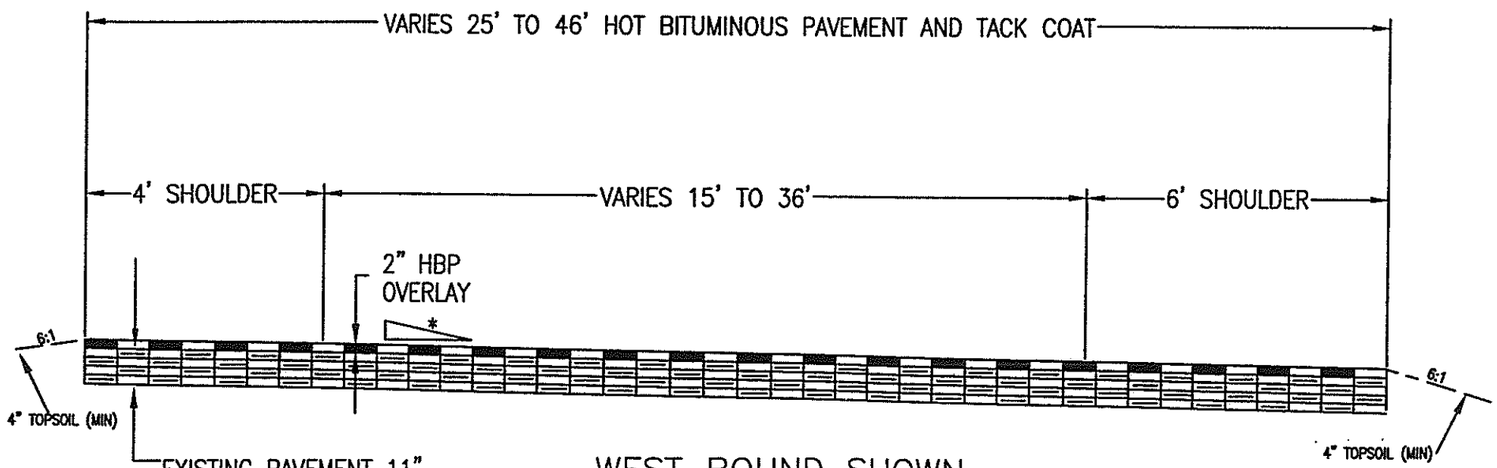

*MATCH EXISTING CROSS SLOPE
NOTE: NO PLANING. PLACE MICRO SURFACING SEAL TO LEVEL ROADWAY RUTS.

WEST BOUND SHOWN
(EAST BOUND MIRROR IMAGE)

RAMP A Sta. 680+28 to 690+00
RAMP B Sta. 679+36 to 690+00
RAMP C Sta. 691+00 to 702+07
RAMP D Sta. 691+00 to 701+05

Computer File Information			
Creation Date:	9/4/02	Initials: JRE	(R-1)
Last Modification Date:	12/04/02	Initials: JRE	(R-2)
Full Path:		C:\14235\Plans	(R-3)
Drawing File Name:		RDTY0401.dwt	(R-4)
Acad Ver.: 15.06s (LMS Tech)	Scale: 1:1	Units: ENGLISH	(R-5)

Sheet Revisions		

Colorado Department of Transportation
8833 South Wadsworth Ct.
Littleton, Colorado 80128
Phone: (303) 972-9112 FAX: (303) 972-9114
Region 6 South Area
RLB

As Constructed
No Revisions:
Revised:
Void:

TYPICAL SECTIONS

Designer:	JRE		
Detailer:	JRE		
Sheet Subset:		Subset Sheets: 4 of 6	

Project No./Code
STA 4701-104
14235
Sheet Number 8

As Constructed
No Revisions:
Revised:
Void:

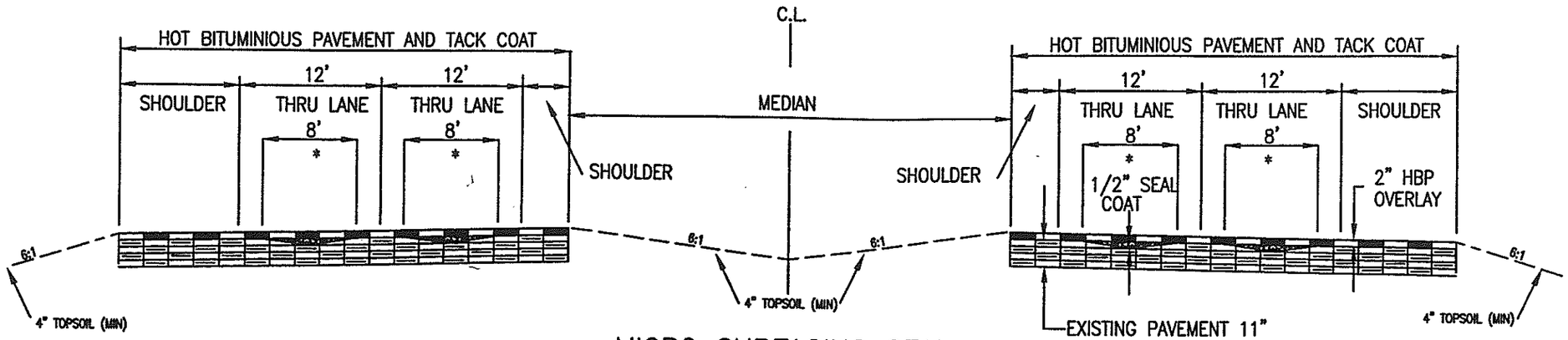

MICRO SURFACING SEAL COAT DETAIL

* PLACE 1/2" MICRO SURFACING SEAL COAT TO LEVEL ROADWAY RUTS IN THE CENTER 8' OF EACH THRU LANE PRIOR TO 2" HBP OVERLAY.

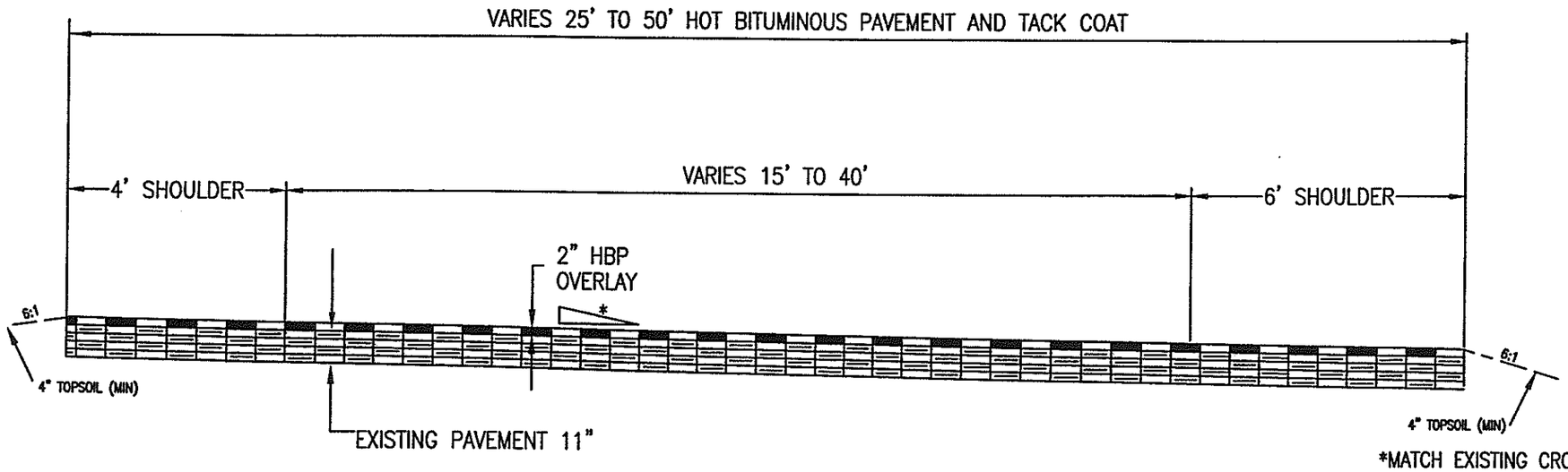

*MATCH EXISTING CROSS SLOPE
NOTE: NO PLANING. PLACE MICRO SURFACING SEAL TO LEVEL ROADWAY RUTS.

WEST BOUND SHOWN
(EAST BOUND MIRROR IMAGE)

RAMP E Sta. 757+85 to 766+18
RAMP F Sta. 752+95 to 766+18

Computer File Information		
Creation Date:	8/8/02	Initials: JRE
Last Modification Date:	12/10/02	Initials: JRE
Full Path:		C:\14235\Plans
Drawing File Name:		RDTY0501.dwt
Acad Ver.: 15.06s (LMS Tech) Scale: 1:1		Units: ENGLISH

	Sheet Revisions		
R-1			
R-2			
R-3			
R-4			
R-5			

Colorado Department of Transportation
8833 South Wadsworth Ct.
Littleton, Colorado 80128
Phone: (303) 972-9112 FAX: (303) 972-9114
Region 6 South Area RLB

As Constructed
No Revisions:
Revised:
Void:

TYPICAL SECTIONS

Designer: JRE
Detailer: JRE
Sheet Subset:
Subset Sheets: 5 of 6

Project No./Code
STA 4701-104
14235
Sheet Number 9

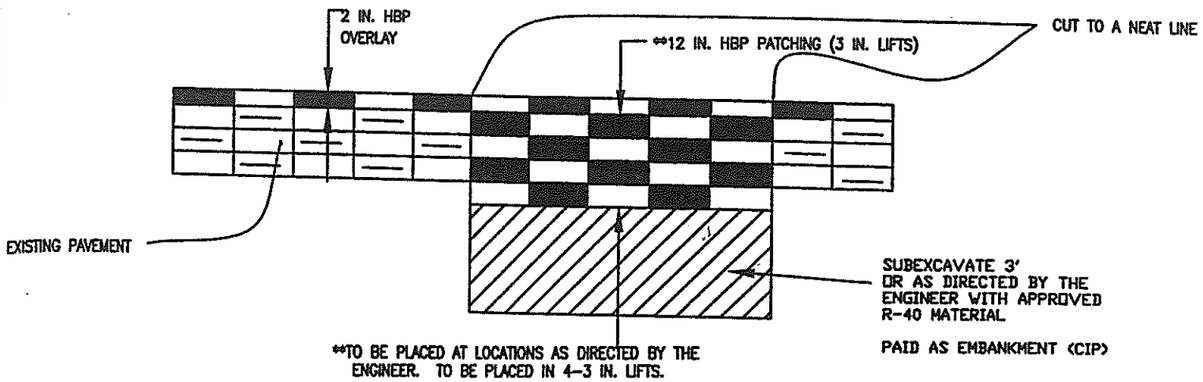

HBP PATCHING DETAIL

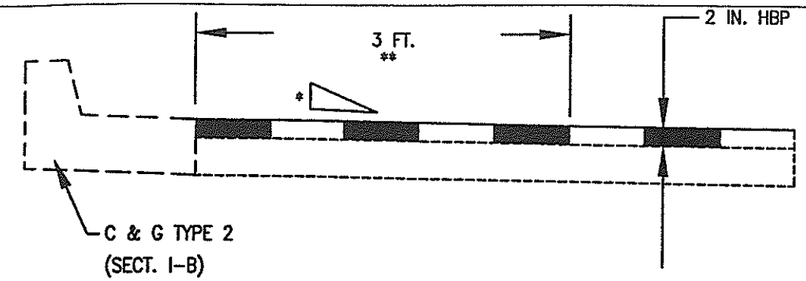

NOTE: THIS DETAIL TO BE USED IN AREAS
WHERE EXISTING ASPHALT IS FLUSH WITH
OR ABOVE THE CURB PAN.
* MATCH EXISTING CROSS SLOPE.
** FOR HBP TO BE FLUSH WITH PANLINE,
EXISTING PAVEMENT TO BE PLANED A MINIMUM OF 2".

OVERLAY TAPER AT ISLAND CURB & GUTTER TYPE 2 (SECT. I-B)

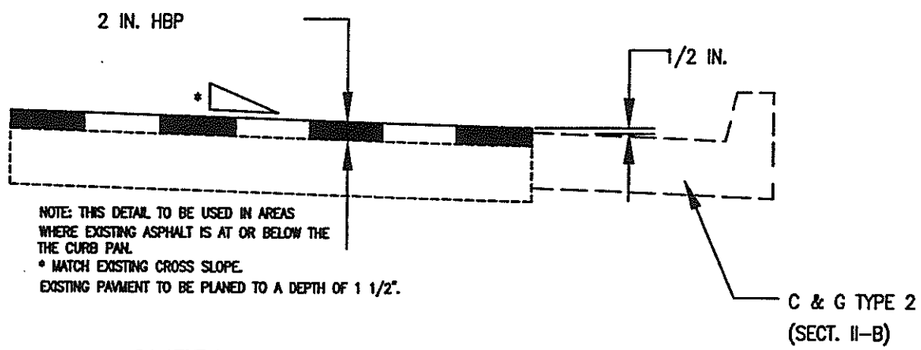

NOTE: THIS DETAIL TO BE USED IN AREAS
WHERE EXISTING ASPHALT IS AT OR BELOW THE
THE CURB PAN.
* MATCH EXISTING CROSS SLOPE.
EXISTING PAVMENT TO BE PLANED TO A DEPTH OF 1 1/2".

OVERLAY TAPER AT CURB & GUTTER TYPE 2 (SECT. II-B)

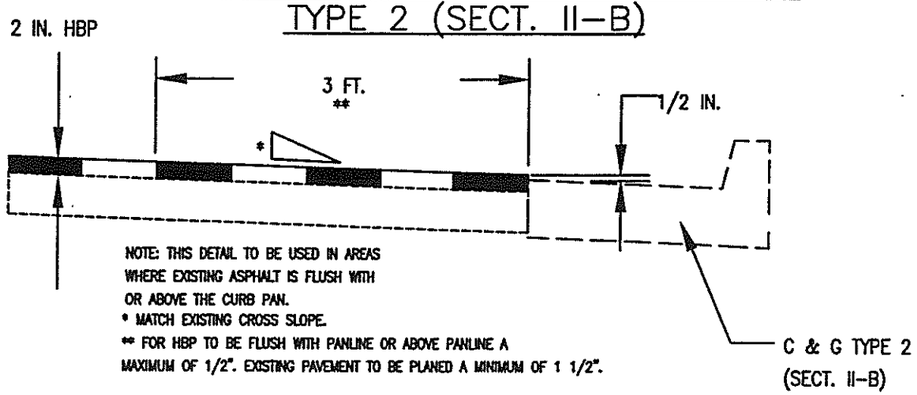

NOTE: THIS DETAIL TO BE USED IN AREAS
WHERE EXISTING ASPHALT IS FLUSH WITH
OR ABOVE THE CURB PAN.
* MATCH EXISTING CROSS SLOPE.
** FOR HBP TO BE FLUSH WITH PANLINE OR ABOVE PANLINE A
MAXIMUM OF 1/2". EXISTING PAVEMENT TO BE PLANED A MINIMUM OF 1 1/2".

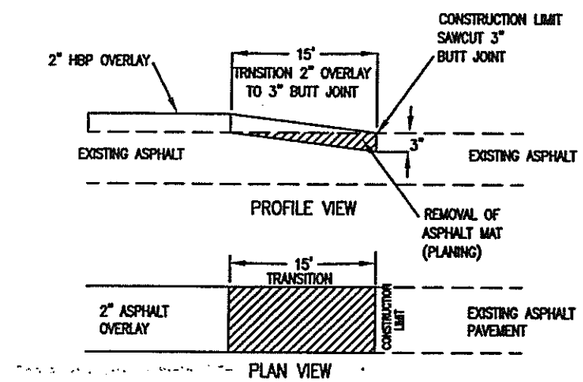

ASPHALT OVERLAY – EXISTING ASPHALT PAVEMENT BUTT JOINT CONNECTION DETAIL

N.T.S.

NOTE: REMOVAL OF ASPHALT MAT (PLANING) TO BE PAID FOR SEPERATELY.

As Constructed
No Revisions:
Revised:
Void:

Computer File Information			
Creation Date:	9/84/02	Initials: JRE	
Last Modification Date:	12/02/02	Initials: JRE	
Full Path:		C:\14235\Plans	
Drawing File Name:		RDTY0601.dwt	
Acad Ver.: 15.06s (LMS Tech)	Scale: 1:1	Units: ENGLISH	

	Sheet Revisions		
(R-1)			
(R-2)			
(R-3)			
(R-4)			
(R-5)			

Colorado Department of Transportation
8833 South Wadsworth Ct.
Littleton, Colorado 80128
Phone: (303) 972-9112 FAX: (303) 972-9114
Region 6 South Area RLB

As Constructed
No Revisions:
Revised:
Void:

TYPICAL SECTIONS

Designer:	JRE		
Detailer:	JRE		
Sheet Subset:		Subset Sheets: 6 of 6	

Project No./Code
STA 4701-104
14235
Sheet Number 10

INDEX BOOK	INDEX PAGE	INDEX SHEET	CONTRACT ITEM NO.	CONTRACT ITEM	UNIT	ROADWAY PLAN	ROADWAY AS CONST.																	PROJECT TOTALS PLAN	PROJECT TOTALS AS CONST.
			202-00090	Removal of Delineator	EACH	39																		39	
			202-00200	Removal of Sidewalk	SY	255																		255	
			202-00220	Removal of Asphalt Mat	SY	126																		126	
			202-00240	Removal of Asphalt Mat (Planing)	SY	14,744																		14,744	
			202-00810	Removal of Ground Sign	EACH	26																		26	
			202-00821	Removal of Sign Panel	EACH	3																		3	
			202-01000	Removal of Fence	LF	105																		105	
			202-01130	Removal of Guardrail Type 3	LF	1,695																		1,695	
			202-01140	Removal of Guardrail Type 4	LF	2,125																		2,125	
			202-01300	Removal of End Anchorage	EACH	13																		13	
			203-00060	Embankment Material (Complete In Place)	CY	935																		935	
			203-01500	Blading	HOUR	50																		50	
			203-01597	Potholing	HOUR	30																		30	
			207-00205	Topsoil	CY	1,640																		1,640	
			208-00011	Erosion Bales (Weed Free)	EACH	100																		100	
			208-00020	Silt Fence	LF	200																		200	
			208-00050	Storm Drain Inlet Protection	EACH	28																		28	
			208-00100	Sediment Removal and Disposal	L S	1																		1	
			208-00200	Erosion Control Supervisor	L S	1																		1	
			208-00300	Temporary Berms	LF	500																		500	
			212-00006	Seeding (Native)	ACRE	8.66																		8.66	
			213-00002	Mulching (Weed Free Hay)	ACRE	8.66																		8.66	
			213-00061	Mulch Tackifier	LB	1,299																		1,299	
			216-00041	Soil Retention Blanket (Straw/Coconut)	SY	100																		100	
			403-00720	Hot Bituminous Pavement (Patching) (Asphalt)	TON	56.1																		56.1	
			403-00800	Emergency Pothole Repair	TON	50																		50	
			403-33871	Hot Bituminous Pavement (Grading S) (100) (PG 76-28)	TON	25,651.02																		25,651.02	
			409-09000	Micro-Surfacing Seal Coat	TON	1,938																		1,938	
			411-10255	Emulsified Asphalt (Slow-Setting)	GAL	10,431																		10,431	
			518-03000	Sawing and Sealing Bridge Joint	LF	160																		160	
			606-00301	Guardrail Type 3 (6-3 Post Spacing)	LF	3,145																		3,145	
			606-00420	Guardrail Type 4 (Style CA)	LF	80																		80	

Computer File Information		
Creation Date: 10/16/02	Initials: JRE	(R-1)
Last Modification Date: 12/17/02	Initials: JRE	(R-2)
Full Path:	C:\14235\Plans	(R-3)
Drawing File Name:	GESQ0101.dwg	(R-4)
Acad Ver.:15.06s (LMS Tech) Scale:NA	Units: ENGLISH	(R-5)

Sheet Revisions

Colorado Department of Transportation
CDOT
8833 South Wadsworth Ct.
Littleton, Colorado 80128
Phone: (303) 972-9112 FAX: (303) 972-9114
Region 6 South Area RLB

As Constructed
No Revisions:
Revised:
Void:

SUMMARY OF APPROXIMATE QUANTITIES

Designer: JRE
Detailer: JRE
Sheet Subset: SQUA
Subset Sheets: 1 of 3

Project No./Code
STA 4701-104
14235
Sheet Number 11

INDEX BOOK	INDEX PAGE	INDEX SHEET	CONTRACT ITEM NO.	CONTRACT ITEM	UNIT	ROADWAY PLAN	ROADWAY AS CONST.	PROJECT TOTALS PLAN	PROJECT TOTALS AS CONST.
			606-01340	End Anchorage Type 3D	EACH	4		4	
			606-01370	Transition Type 3G	EACH	4		4	
			606-01380	Transition Type 3H	EACH	4		4	
			606-01460	Median Terminal	EACH	8		8	
			606-02003	End Anchorage (Nonflared)	EACH	4		4	
			607-11460	Fence Wood Railing	LF	105		105	
			607-11525	Fence (Plastic)	LF	400		400	
			608-00000	Concrete Sidewalk	SY	255		255	
			612-00001	Delineator (Type I)	EACH	70		70	
			612-00002	Delineator (Type II)	EACH	14		14	
			612-00003	Delineator (Type III)	EACH	17		17	
			614-00012	Sign Panel (Class II)	SF	303.2		303.2	
			614-00013	Sign Panel (Class III)	SF	306		306	
			614-00612	Steel Sign Post (W 6x12)	LF	24		24	
			614-00818	Steel Sign Post (W 8x18)	LF	34		34	
			614-01582	Steel Sign Post (2.5 Inch Round)(Slipbase Sch. 80)	LF	336		336	
			614-03001	Concrete Footing (Type 1)	EACH	2		2	
			614-03003	Concrete Footing (Type 3)	EACH	2		2	
			620-00002	Field Office (Class 2)	EACH	1		1	
			620-00012	Field Laboratory (Class 2)	EACH	1		1	
			620-00020	Sanitary Facility	EACH	2		2	
			625-00000	Construction Surveying	L S	1		1	
			626-00000	Mobilization	L S	1		1	
			626-01000	Public Information Services	L S	1		1	
			627-00002	Thermoplastic Pavement Marking	SF	32,905		32,905	
			627-00012	Pavement Marking Paint (Low VOC Solvent Base)	GAL	1,030		1,030	
			627-01000	Preformed Plastic Pavement Marking (Type A)	SF	3,125		3,125	
			627-30325	Preformed Plastic Pavement Marking (Type B) (Word-Symbol)	SF	275.5		275.5	
			627-30330	Preformed Plastic Pavement Marking (Type B) (Xwalk-Stopline)	SF	880		880	
			630-00000	Flagging	HOUR	800		800	
			630-00003	Uniformed Traffic Control	HOUR	300		300	
			630-00007	Traffic Control Inspection	DAY	35		35	

Computer File Information		
Creation Date:	10/16/02	Initials: JRE
Last Modification Date:	12/17/02	Initials: JRE
Full Path:		C:\14235\Plans
Drawing File Name:		GESQ0201.dwg
Acad Ver.:15.06s (LMS Tech) Scale:NA		Units: ENGLISH

Sheet Revisions: (R-1) (R-2) (R-3) (R-4) (R-5)

Colorado Department of Transportation
CDOT
8833 South Wadsworth Ct.
Littleton, Colorado 80128
Phone: (303) 972-9112 FAX: (303) 972-9114
Region 6 South Area RLB

As Constructed
No Revisions:
Revised:
Void:

SUMMARY OF APPROXIMATE QUANTITIES

Designer: JRE
Detailer: JRE
Sheet Subset: SQUA Subset Sheets: 2 of 3

Project No./Code
STA 4701-104
14235
Sheet Number 12

INDEX BOOK	INDEX PAGE	INDEX SHEET	CONTRACT ITEM NO.	CONTRACT ITEM	UNIT	ROADWAY PLAN	ROADWAY AS CONST.	PROJECT TOTALS PLAN	PROJECT TOTALS AS CONST.
			630-00012	Traffic Control Management	DAY	90		90	
			630-80001	Flashing Beacon (Portable)	EACH	4		4	
			630-80341	Construction Traffic Sign (Panel Size A)	EACH	4		4	
			630-80342	Construction Traffic Sign (Panel Size B)	EACH	55		55	
			630-80343	Construction Traffic Sign (Panel Size C)	EACH	8		8	
			630-80344	Construction Traffic Sign (Special)	SF	168		168	
			630-80358	Advance Warning Flashing or Sequencing Arrow Panel (C Type)	EACH	2		2	
			630-80359	Portable Message Sign Panel	DAY	120		120	
			630-80360	Drum Channelizing Device	EACH	60		60	
			630-80370	Concrete Barrier (Temporary)	LF	300		300	
			630-80380	Traffic Cone	EACH	500		500	
			630-80520	Mobile Pavement Marking Zone	DAY	10		10	
			630-85010	Impact Attenuator (Temporary)	EACH	2		2	
				FORCE ACCOUNT ==========					
			700-70010	F/A Minor Contract Revisions	F A	1		1	
			700-70012	F/A Asphalt Pavement Incentive	F A	1		1	
			700-70022	F/A OJT Colorado Training Program	F A	1		1	
			700-70023	F/A On-The-Job Trainee	F A	1		1	
			700-70025	F/A Quality Incentive Payment	F A	1		1	
			700-70028	F/A ESB Program	F A	1		1	

Computer File Information		
Creation Date:	10/16/02	Initials: JRE
Last Modification Date:	1/7/03	Initials: JRE
Full Path:		C:\14235\Plans
Drawing File Name:		GESQ0301.dwg
Acad Ver.:15.06s (LMS Tech) Scale:NA		Units: ENGLISH

Sheet Revisions: R-1, R-2, R-3, R-4, R-5

Colorado Department of Transportation
DOT
8833 South Wadsworth Ct.
Littleton, Colorado 80128
Phone: (303) 972-9112 FAX: (303) 972-9114
Region 6 South Area RLB

As Constructed
No Revisions:
Revised:
Void:

SUMMARY OF APPROXIMATE QUANTITIES

Designer: JRE
Detailer: JRE
Sheet Subset: SQUA
Subset Sheets: 3 of 3

Project No./Code
STA 4701-104
14235
Sheet Number 13

STATION	SIDE	REMOVAL OF ASPHALT MAT	REMOVAL OF ASPHALT MAT (PLANING)	MICRO SURFACING SEAL COAT	HOT BITUMINOUS PAVEMENT (PATCHING) (ASPHALT)	HOT BITUMINOUS PAVEMENT (GRADE S)(ASPHALT) (100)(PG 76-28)	EMULSIFIED ASPHALT	DESCRIPTION
		SY	SY.	TON	TON	TON	GAL	
595+00 TO 765+68				1,938				FOR RUTTS IN TRAVEL LANES
595+00 TO 600+00						488.57	222	BEGINNING OF PROJECT OVERLAY
595+00 TO 595+15			127					FOR FEATHERED TIE-IN
600+00 TO 630+00						2,786.67	1,267	
630+00 TO 665+00						3,251.11	1,478	
665+00 TO 679+36						1,676.80	762	
679+36 TO 680+28						119.64	54	
680+28 TO 701+05						1,929.30	877	
689+44 TO 691+44			1,690					KIPLING BRIDGE 1" PLANE & 2" HBP
701+05 TO 702+07						131.71	60	
702+07 TO 717+19						1,839.71	836	
717+19 TO 736+63						3,321.71	1,510	
736+63 TO 752+95						1,965.22	893	
752+95 TO 754+14						152.87	69	
754+14 TO 765+68						1,903.29	865	END OF PROJECT OVERLAY
765+53 TO 765+68			127					FOR FEATHERED TIE-IN
734+00 TO 757+85	LT		12,800			*1408.00		LEVELING COARSE @ WB WADS ONRAMP
RAMP A 680+28 TO 690+00						465.46	212	WB ONRAMP KIPLING
RAMP B 679+38 TO 690+00						514.21	234	EB OFFRAMP KIPLING
RAMP C 691+00 TO 702+07						519.42	236	WB OFFRAMP KIPLING
RAMP D 691+00 TO 701+05						484.78	220	EB ONRAMP KIPLING
PAGE TOTALS			14,744	1,938		22,958.47	9,795	

* 2" leveling coarse. Not to be paid for seperately, but included in the cost of HBP (Grade S)(Asphalt)(100)(PG 76-28).

NOTE: RAMP STATIONING DOES NOT COINCIDE WITH RAMP LENGTHS.
THE RAMP STATIONING IS INCLUDED FOR RAMP LOCATION PURPOSES ONLY.

As Constructed
No Revisions:
Revised:
Void:

Computer File Information
Creation Date: 8/13/02 Initials: JRE
Last Modification Date: 12/02/02 Initials: JRE
Full Path: C:\14235\Plans
Drawing File Name: RDTA0101.dwt
Acad Ver.: 15.06s (LMS Tech) Scale: 1:1 Units: ENGLISH

Sheet Revisions
(R-1)
(R-2)
(R-3)
(R-4)
(R-5)

Colorado Department of Transportation
DOT
8833 South Wadsworth Ct.
Littleton, Colorado 80128
Phone: (303) 972-9112 FAX: (303) 972-9114
Region 6 South Area RLB

As Constructed
No Revisions:
Revised:
Void:

SURFACING PLAN TABULATION
Designer: JRE
Detailer: JRE
Sheet Subset:
Subset Sheets: 1 of 2

Project No./Code
STA 4701-104
14235
Sheet Number 14

STATION	SIDE	REMOVAL OF ASPHALT MAT	REMOVAL OF ASPHALT MAT (PLANING)	MICRO SURFACING SEAL COAT	HOT BITUMINOUS PAVEMENT (PATCHING) (ASPHALT)	HOT BITUMINOUS PAVEMENT (GRADE S)(ASPHALT) (100)(PG 76-28)	EMULSIFIED ASPHALT	DESCRIPTION
		SY	SY	TON	TON	TON	GAL	
RAMP E 754+14 TO 766+18						766.25	348	WB ONRAMP WADSWORTH
RAMP F 752+95 TO 766+18						607.39	276	EB OFFRAMP WADSWORTH
673+83 TO 675+57	RT	27			4		1	NEXT TO EB KIPLING OFFRAMP GUARDRAIL
686+67 TO 689+03	RT	2			5		1	KIPLING BRIDGE SHLD TYPE 4 GUARDRAIL
686+69 TO 689+29	MEDIAN	7			8		2	KIPLING BRIDGE MEDIAN WESTSIDE GUARDRAIL
691+82 TO 694+60	MEDIAN	9			8		2	KIPLING BRIDGE MEDIAN EASTSIDE GUARDRAIL
692+23 TO 694+55	LT	2			5		1	KIPLING OFFRAMP SHLD TYPE 4 GUARDRAIL
705+23 TO 706+98	LT	16			4		1	WB KIPLING OFFRAMP GUARDRAIL
749+02 TO 750+74	RT	21			4		1	EB WADSWORTH OFFRAMP GUARDRAIL
762+36 TO 764+80	RT	2			8		2	EB WADS BRIDGE SHLD TYPE 4 GUARDRAIL
762+79 TO 765+38	MEDIAN	40			5		1	WS WADSWORTH BRIDGE MEDAIN GUARDRAIL
10% FOR IRREGULARITES					5.1	2,331.91		
PAGE TOTALS		126	0	0	56.1	3,705.55	636	
PROJECT TOTALS		126	14,744	1,938	56.1	26,664.02	10,431	

As Constructed
No Revisions:
Revised:
Void:

Computer File Information
Creation Date: 9/6/02 Initials: JRE
Last Modification Date: 12/09/02 Initials: JRE
Full Path: C:\14235\Plans
Drawing File Name: RDTA0201.dwt
Acad Ver.: 15.06s (LMS Tech) Scale: 1:1 Units: ENGLISH

(R-1)
(R-2)
(R-3)
(R-4)
(R-5)

Sheet Revisions

Colorado Department of Transportation
DOT
8833 South Wadsworth Ct.
Littleton, Colorado 80128
Phone: (303) 972-9112 FAX: (303) 972-9114
Region 6 South Area RLB

As Constructed
No Revisions:
Revised:
Void:

SURFACING PLAN TABULATION

Designer: JRE
Detailer: JRE
Sheet Subset:
Subset Sheets: 2 of 2

Project No./Code
STA 4701-104
14235
Sheet Number 15

Pavement Design Criteria

ROADWAY	PARAMETERS	FLEXIBLE OVERLAY FWD DESIGN
C 470, Ken Caryl to Wadsworth	Design Life (years)	10
	18K ESAL	3,233,000
	Initial Serviceability	4.5
	Terminal Serviceability	2.5
	% Reliability	85
	Overall Standard Deviation	0.44
	R-Value Design	33
	Soil Resilient Modulus (psi)	7623
	Structural Coefficient	3.8
	Overlay Structural Number	0.0
	Structural Coefficient	0.44
	Effective Pavement Modulus (psi)	501,479
	Drainage Coefficient	1
	Total Required Str. Number (inch)	3.85
	Overlay Str. Number (inch)	0.63
	Pavement Thickness	--
	Overlay Thickness	2"
	Milling Thickness	2"
	HBP Grading Top Lift	S(100)(PG) (76-28)

Notes:

X Full width milling.

X Patching: match existing pavement thickness.

Roadway Smoothness

Direction/Lane	International Roughness Index (IRI)/ Date of Survey
Increasing Milepost, Outside Lane	104, 2/27/02
Decreasing Milepost, Outside Lane	116, 2/27/02

STATION AND LOG	TEST NO.	DESCRIPTION	PERCENT PASSING
C470, KEN CARYL TO WADSWORTH, PAVEMENT CORES			
Westbnd @ MP 13.75, Ln2			
0-10.5"	1	HBP CORE	1.0" overlay(PMSC**), 1-2.5", 2.5"-5.0", 5.0-7.5",
10.5-17.0" (6 1/2")		Lime Treated Soil	7.5"-10.5" (all 3/4" mix)
Westbnd @ MP 13.0, Ln2			
0-10.4"	2	HBP CORE	0.5" overlay(PMSC), 0.5-2.5" (voids noted at
10.4" +		Clayey, Sand (Medium PI)	1.5-2.5"), 2.5-6.0", 6.0"-10.4" (all 3/4" mix)
Westbnd @ MP 12.3, Ln2			
0-11.0"	3	HBP CORE	0.5" overlay(PMSC), 0.5-2.25", 2.25-5" (large
11.0" +		Clayey, Sand w/gravel(Med. PI)	voids noted @ 5.0"), 5.0-8.0", 8-11.0" (all 3/4" mix)
Westbnd @ MP 11.6, Ln2			
0-11.75"	4	HBP CORE	0.5" overlay(PMSC), 0.5-2.25", 2.25-5", 5.0-8.0",
11.75" +		Clayey, Sand (Medium PI)	8-11.75" (all 3/4" mix)
Westbnd @ MP 11.0, Ln2			
0-10.0"	5	HBP CORE	0.5" overlay(PMSC), 0.5-2.5", 2.5-4.5", 4.5" + (Core broke
10.0" + (bottom portion could not be retrieved)			at 4.5", appeared very pourous w/stripped aggregate.)
Westbnd @ MP 11.0, Ln2			
0-11.1"	5A	HBP CORE @ Longitudinal Crack*	0.5" overlay(PMSC), 0.5-5.0", 5.0-7.0", 7-11.1",
11.1" +		Clay, (High PI)	(all 3/4" mix) The botton 5.0" is slightly porous.
			*The crack extends from the top down to a
			depth of 5.0".
Westbnd @ MP 11.0, shoulder			
0-11.0"	5B	HBP CORE	0.5" overlay(PMSC), 0.5-2.75" (voids at 2.75"),
11.0" +		Clay, (High PI)	22.75-5.0" (voids at 5.0"), 5-7.0" (large voids
			and stripping at 7"). The core broke at 7"
			and could not be retrieved.
Eastbnd @ MP 11.3, Ln2			
0-11.3"	6	HBP CORE	0.5" overlay(PMSC), 0.5-2.0" (voids at 2.0"), 2.0-4.25"
11.3" +		Slightly Sandy Clay	(voids at 4.25"), 4.25-6.25", 6.25-9.0", 9.0-11.3" (all 3/4" mix)
Eastbnd @ MP 11.95, Ln2			
0-12.0"	7	HBP CORE	0.5" overlay(PMSC), 0.5-2.0", 2.0-4.50", 4.50-6.50", 6.50-9.0",
12.0" +		Slightly Sandy Clay	9.0-12.0", (all 3/4" mix w/slight voids throughout).
Eastbnd @ MP 11.95, shoulder			
0-11.25"	7A	HBP CORE (core disintegrated)	The core disintegrated and could not be retrieved.
11.25" +		Slightly Sandy Clay	
Eastbnd @ MP 12.95, Ln2			
0-9.75"	8	HBP CORE	0.5" overlay (PMSC), 0.5-4.0", 4.0-6.50", 6.50-9.75", (This
9.75" -17.0 (7 1/4")		LIME TREATED SOIL	mix appears segregated with a brownish color in the binder.)
		Slightly Sandy Clay	
Eastbnd @ MP 13.30, Ln2			
0-10.75"	9	HBP CORE	0.5" overlay (PMSC), 0.5-2.5", 2.5-4.50", 4.50-6.50", 6.5-10.75"
10.75" -18.0" (7 1/4")		LIME TREATED SOIL	(all 3/4" mix with slight voids throughout).
		Sandy Clay	
Eastbnd @ MP 13.65, Ln2			
0-10.5"	10	HBP CORE	0.5" overlay (PMSC), 0.5-2.0", 2.0-5.0", 5.0-6.50", 6.5-9.0"
10.5" -17.5" (7")		LIME TREATED SOIL	9-10.5" (all 3/4" mix)
		Sandy Clay	
MP 10.1 TO 12.9 AVE. HBP THICKNESS = 11.0" WITHOUT LTS			
MP 12.9 TO 13.9 AVE. HBP THICKNESS = 10.3" WITH 7" LTS			

**Plant Mixed Seal Coat.

TABLE FOR INFORMATION ONLY.

As Constructed

No Revisions:

Revised:

Void:

Computer File Information		
Creation Date: 8/13/02	Initials: JRE	
Last Modification Date: 12/02/02	Initials: JRE	
Full Path:	C:\14235\Plans	
Drawing File Name:	PDTA0101.dwt	
Acad Ver.: 15.06s (LMS Tech)	Scale: 1:1	Units: ENGLISH

(R-1) (R-2) (R-3) (R-4) (R-5)

Sheet Revisions

Colorado Department of Transportation

8833 South Wadsworth Ct.
Littleton, Colorado 80128
Phone: (303) 972-9112 FAX: (303) 972-9114

Region 6 South Area

RLB

As Constructed

No Revisions:

Revised:

Void:

Pavement Design Criteria & Roadway Smoothness

Designer: JRE

Detailer: JRE

Sheet Subset:

Subset Sheets: 1 of 1

Project No./Code

STA 4701-104

14235

Sheet Number 16

APPROXIMATE LOCATION	EMBANKMENT MATERIAL (CIP) CU. YARD ROADWAY		EMBANKMENT MATERIAL (CIP) CU. YARD STRUCTURES		* TOPSOIL CU. YARD		DESCRIPTION
595+00–765+68 mainline					843		
629+34–632+72 med.	92				142		F–16–PD
673+83–675+57 RT	5						F–16–PC
679+38–690+00 RT					27		RAMP B
680+28–690+00 LT					24		RAMP A
686+67–689+03 RT	142						F–16–MC
686+69–689+29 med.	136				113		
691+00–702+07 LT					28		RAMP C
691+00–701+05 RT					25		RAMP D
691+42–693+91 LT	23						
691+82–694+60 med.	136				121		
692+23–694+55 LT	142						F–16–MD
705+23–706+98 LT	5						F–16–OZ
725+76–729+14 med.	92				142		F–16–OY
749+02–750+74 RT	6						F–16–OX
752+95–766+18 RT					33		RAMP F
754+14–766+18 LT					30		RAMP E
762+36–764+80 RT	20						F–16–MG
762+79–765+38 med.	136				112		
SHEET TOTALS	935				1640		

* MINIMUM THICKNESS OF TOPSOIL SHALL BE 4" AND BE OBTAINED FROM CONTRACTOR'S SOURCE.

SUMMARY OF EARTHWORK		PROJECT TOTALS	
EMBANKMENT MATERIAL (CIP) Roadway	Total Embankment (CY)	3,280	
FOR INFORMATION ONLY			
WETTING QUANTITIES (MGAL) For Compaction (Roadway and Structure) A CY X 0.04 MGal/CY =		133 MGal	
UNCLASSIFIED EXCAVATION Structural Quantities As Excavation	Total Excavation Available (CY)	0	
COMPACTION (AASHTO T99) Embankment (NET) Structural Quantities As Embankment (Net)		3,280 0	
	Total (CY)	3,280	
ROADWAY QUANTITIES BALANCE FOR INFORMATION ONLY			
EXCAVATION From Undesignated source	Total (CY)	3,772	
EMBANKMENT MATERIAL (NET) Roadway	Total (CY)	3,280	
EMBANKMENT X FACTOR (1.15) Roadway	Total (CY)	3,772	

As Constructed
No Revisions:
Revised:
Void:

Computer File Information

Creation Date: 9/30/02	Initials: JRE	(R–1)
Last Modification Date: 12/04/02	Initials: JRE	(R–2)
Full Path:	C:\14235\Plans	(R–3)
Drawing File Name:	EWTA0101.dwt	(R–4)
Acad Ver.: 15.06s (LMS Tech) Scale: 1:1	Units: ENGLISH	(R–5)

Sheet Revisions

Colorado Department of Transportation
8833 South Wadsworth Ct.
Littleton, Colorado 80128
Phone: (303) 972–9112 FAX: (303) 972–9114
Region 6 South Area RLB

As Constructed
No Revisions:
Revised:
Void:

EARTHWORK TABULATION & QUANTITIES BALANCE

Designer: JRE
Detailer: JRE
Sheet Subset:
Subset Sheets: 1 of 1

Project No./Code
STA 4701–104
14235
Sheet Number 19

following utilities are within project limits but are not expected to be involved:

Owner-Facility	Contact	Phone/Fax
l Energy-Street Lighting & c. Distrib.	Cheri Weers	303-571-3505/303-595-4577
l Energy - Gas Operations	Jim McQuiston	303-571-3744/303-571-3826
est Communications - Telephone	Jason Garcia	303-451-2048/303-451-2579
& T Broadband - Cable TV	Scott Adams	303-603-5605/303-603-5628
ckheed Martin - Telecom Fiber	Barb Carlsen	303-971-8867/303-971-1259
nver Water Depart. - Water	Paul McQuade	303-628-6204/303-628-6851
Metro - Water & San. District	Pat Fitzgerald	303-979-2333/303-933-1769

FOR BURIED UTILITY INFORMATION
48 HRS BEFORE YOU DIG
CALL 1-800-922-1987
FOR LOCATING & MARKING GAS, ELECTRIC, & TELEPHONE LINES

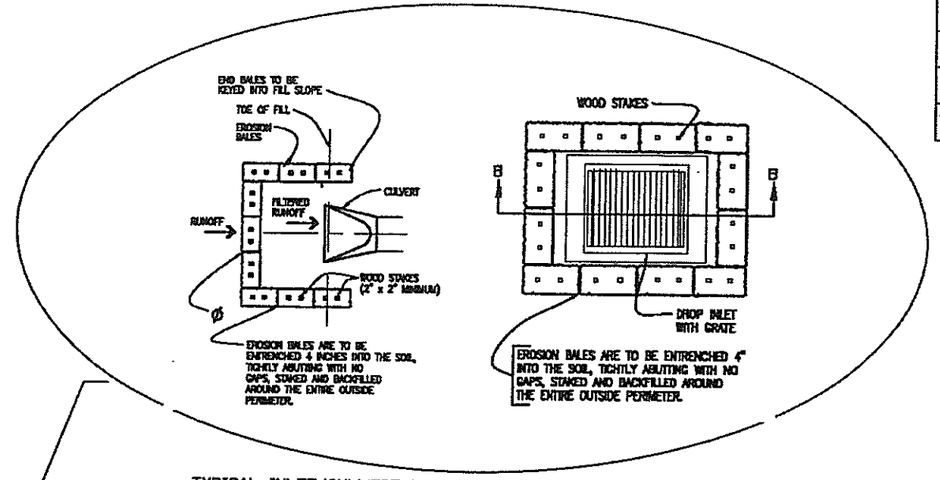

TYPICAL INLET/CULVERT EROSION CONTROL PROTECTION DETAIL

As Constructed
No Revisions:
Revised:
Void:

STA 571+13.02
MP 10.192

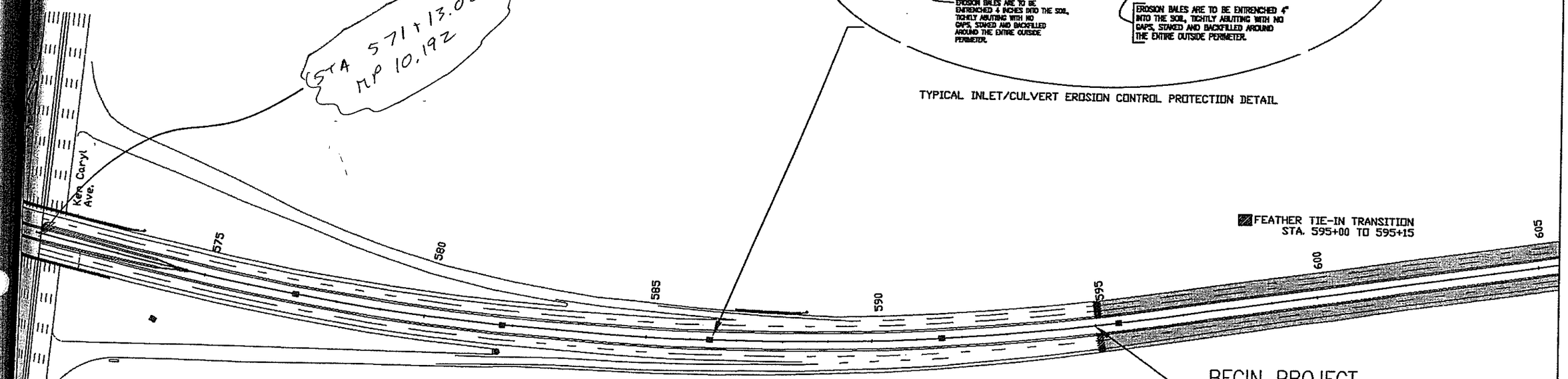

① MP 10.644 - 13.873

② MP 10.644 - 13.273
13.273 - 13.725 - 2" MILL & FILL
13.725 - 13.873

MIRRO - SURFACING
& 2" FILL

Computer File Information			
Creation Date:	8/14/02	Initials: JRE	(R-1)
Last Modification Date:	12/11/02	Initials: JRE	(R-2)
Full Path:		C:\14235\Plans	(R-3)
Drawing File Name:		RDPL0101.dwt	(R-4)
Acad Ver.: 15.06s (LMS Tech)	Scale: 1:1	Units: ENGLISH	(R-5)

Sheet Revisions

Colorado Department of Transportation
8833 South Wadsworth Ct.
Littleton, Colorado 80128
Phone: (303) 972-9112 FAX: (303) 972-9114
Region 6 South Area RLB

As Constructed
No Revisions:
Revised:
Void:

ROADWAY ALIGNMENT

Designer: JRE
Detailer: JRE
Sheet Subset:
Subset Sheets: 1 of 6

Project No./Code
STA 4701-104
14235
Sheet Number 23

FOR BURIED UTILITY INFORMATION
48 HRS BEFORE YOU DIG
CALL 1-800-922-1987
FOR LOCATING & MARKING GAS, ELECTRIC, & TELEPHONE LINES

As Constructed
No Revisions:
Revised:
Void:

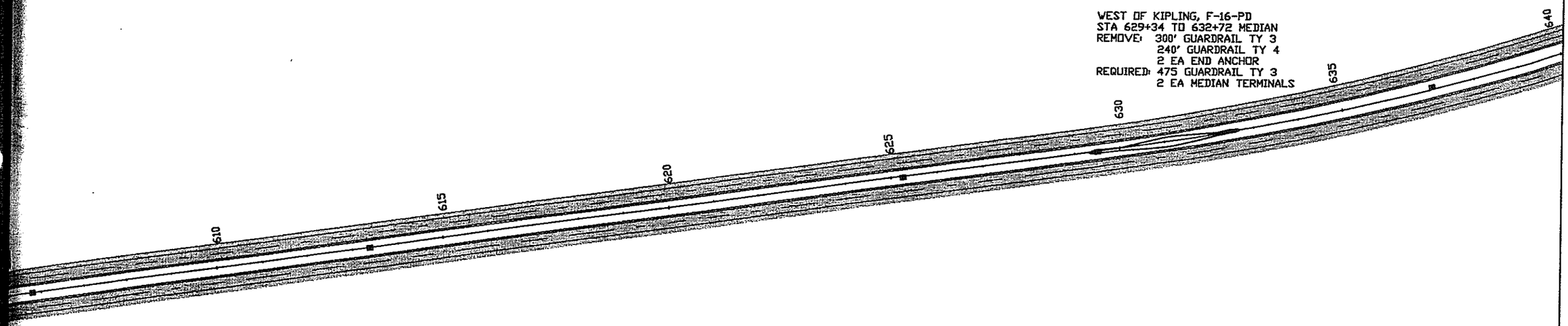

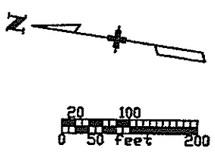

Computer File Information		
Plotting Date:	9/16/02	Initials: JRE
Last Modification Date:	12/05/02	Initials: JRE
File Path:		C:\14235\Plans
Drawing File Name:		RDPL0201.dwt
MicroStation Ver.: 15.06s (LMS Tech)	Scale: 1:1	Units: ENGLISH

	Sheet Revisions		
R-1			
R-2			
R-3			
R-4			
R-5			

Colorado Department of Transportation
8833 South Wadsworth Ct.
Littleton, Colorado 80128
Phone: (303) 972-9112 FAX: (303) 972-9114
Region 6 South Area RLB

As Constructed
No Revisions:
Revised:
Void:

ROADWAY ALIGNMENT

Designer:	JRE	
Detailer:	JRE	
Sheet Subset:	Subset Sheets: 2 of 6	

Project No./Code
STA 4701-104
14235
Sheet Number 24

FOR BURIED UTILITY INFORMATION
48 HRS BEFORE YOU DIG
CALL 1-800-922-1987
FOR LOCATING & MARKING GAS, ELECTRIC, & TELEPHONE LINES

As Constructed
No Revisions:
Revised:
Void:

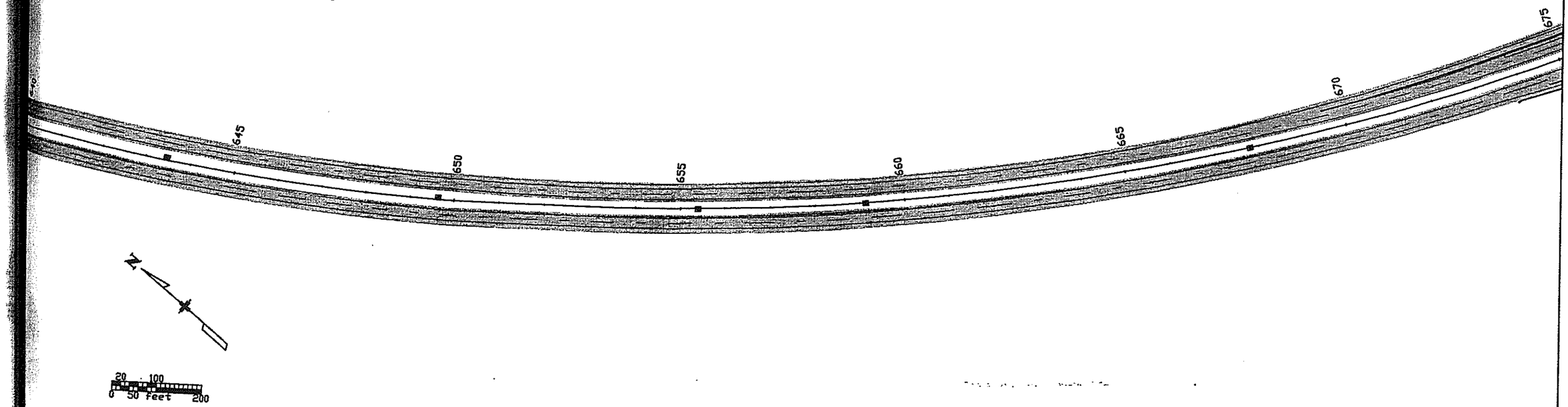

Computer File Information		
Creation Date:	9/16/02	Initials: JRE
Last Modification Date:	12/05/02	Initials: JRE
File Path:		C:\14235\Plans
Drawing File Name:		RDPL0301.dwt
CAD Ver.: 15.06s (LMS Tech)	Scale: 1:1	Units: ENGLISH

Sheet Revisions		
(R-1)		
(R-2)		
(R-3)		
(R-4)		
(R-5)		

Colorado Department of Transportation
8833 South Wadsworth Ct.
Littleton, Colorado 80128
Phone: (303) 972-9112 FAX: (303) 972-9114
Region 6 South Area RLB

As Constructed
No Revisions:
Revised:
Void:

ROADWAY ALIGNMENT

Designer:	JRE		
Detailer:	JRE		
Sheet Subset:		Subset Sheets: 3 of 6	

Project No./Code
STA 4701-104
14235
Sheet Number 25

FOR BURIED UTILITY INFORMATION
48 HRS BEFORE YOU DIG
CALL 1-800-922-1987
FOR LOCATING & MARKING GAS, ELECTRIC, & TELEPHONE LINES

As Constructed
No Revisions:
Revised:
Void:

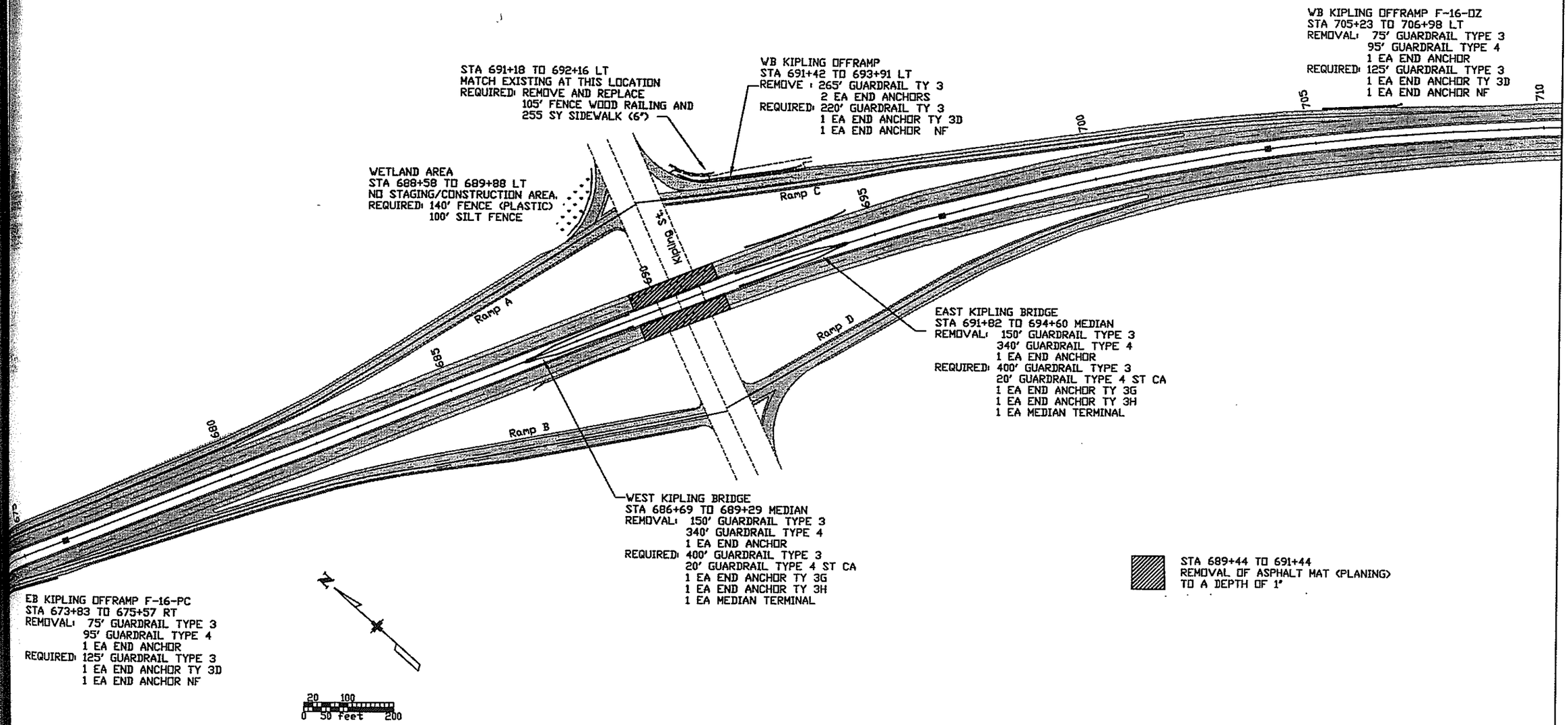

Computer File Information		
Creation Date:	9/16/02	Initials: JRE
Last Modification Date:	12/11/02	Initials: JRE
Path:		C:\14235\Plans
Drawing File Name:		RDPL0401.dwt
Cad Ver.: 15.06s (LMS Tech)	Scale: 1:1	Units: ENGLISH

	Sheet Revisions		
(R-1)			
(R-2)			
(R-3)			
(R-4)			
(R-5)			

Colorado Department of Transportation
8833 South Wadsworth Ct.
Littleton, Colorado 80128
Phone: (303) 972-9112 FAX: (303) 972-9114
Region 6 South Area RLB

As Constructed
No Revisions:
Revised:
Void:

ROADWAY ALIGNMENT

Designer: JRE
Detailer: JRE
Sheet Subset:
Subset Sheets: 4 of 6

Project No./Code
STA 4701-104
14235
Sheet Number 26

FOR BURIED UTILITY INFORMATION
48 HRS BEFORE YOU DIG
CALL 1-800-922-1987
FOR LOCATING & MARKING GAS, ELECTRIC, & TELEPHONE LINES

As Constructed
No Revisions:
Revised:
Void:

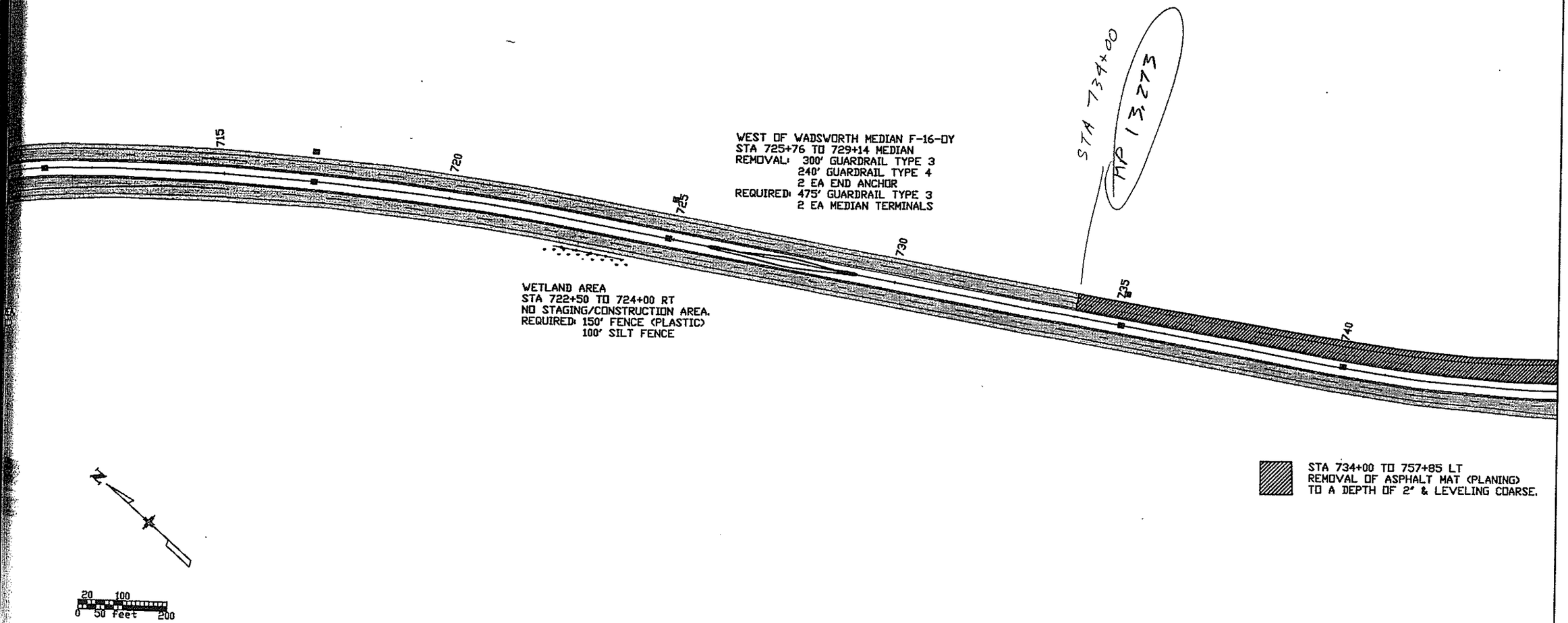

Computer File Information		
Creation Date:	9/16/02	Initials: JRE
Last Modification Date:	12/11/02	Initials: JRE
Full Path:		C:\14235\Plans
Drawing File Name:		RDPL0501.dwt
Acad Ver.: 15.06s (LMS Tech)	Scale: 1:1	Units: ENGLISH

	Sheet Revisions		
R-1			
R-2			
R-3			
R-4			
R-5			

Colorado Department of Transportation
8833 South Wadsworth Ct.
Littleton, Colorado 80128
Phone: (303) 972-9112 FAX: (303) 972-9114
Region 6 South Area RLB

As Constructed
No Revisions:
Revised:
Void:

ROADWAY ALIGNMENT

Designer: JRE
Detailer: JRE
Sheet Subset:
Subset Sheets: 5 of 6

Project No./Code
STA 4701-104
14235
Sheet Number 27

FOR BURIED UTILITY INFORMATION
48 HRS BEFORE YOU DIG
CALL 1-800-922-1987
FOR LOCATING & MARKING GAS, ELECTRIC, & TELEPHONE LINES

As Constructed
No Revisions:
Revised:
Void:

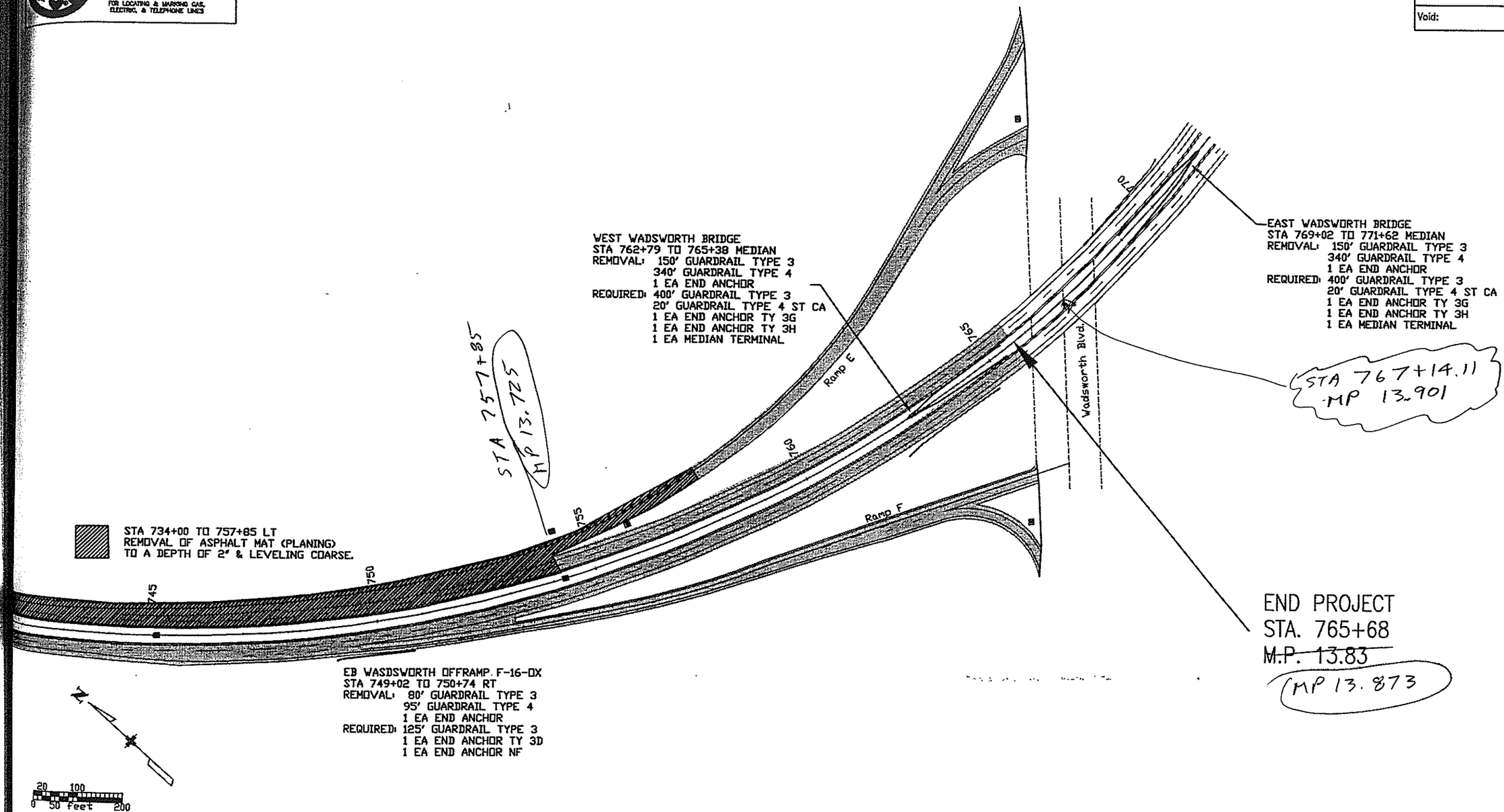

Computer File Information			
Creation Date:	9/16/02	Initials: JRE	(R-1)
Last Modification Date:	12/09/02	Initials: JRE	(R-2)
Full Path:		C:\14235\Plans	(R-3)
Drawing File Name:		RDPL0601.dwt	(R-4)
Acad Ver.: 15.06s (LMS Tech)	Scale: 1:1	Units: ENGLISH	(R-5)

Sheet Revisions		

Colorado Department of Transportation
8833 South Wadsworth Ct.
Littleton, Colorado 80128
Phone: (303) 972-9112 FAX: (303) 972-9114
Region 6 South Area RLB

As Constructed
No Revisions:
Revised:
Void:

ROADWAY ALIGNMENT

Designer: JRE
Detailer: JRE
Sheet Subset:
Subset Sheets: 6 of 6

Project No./Code
STA 4701-104
14235
Sheet Number 28