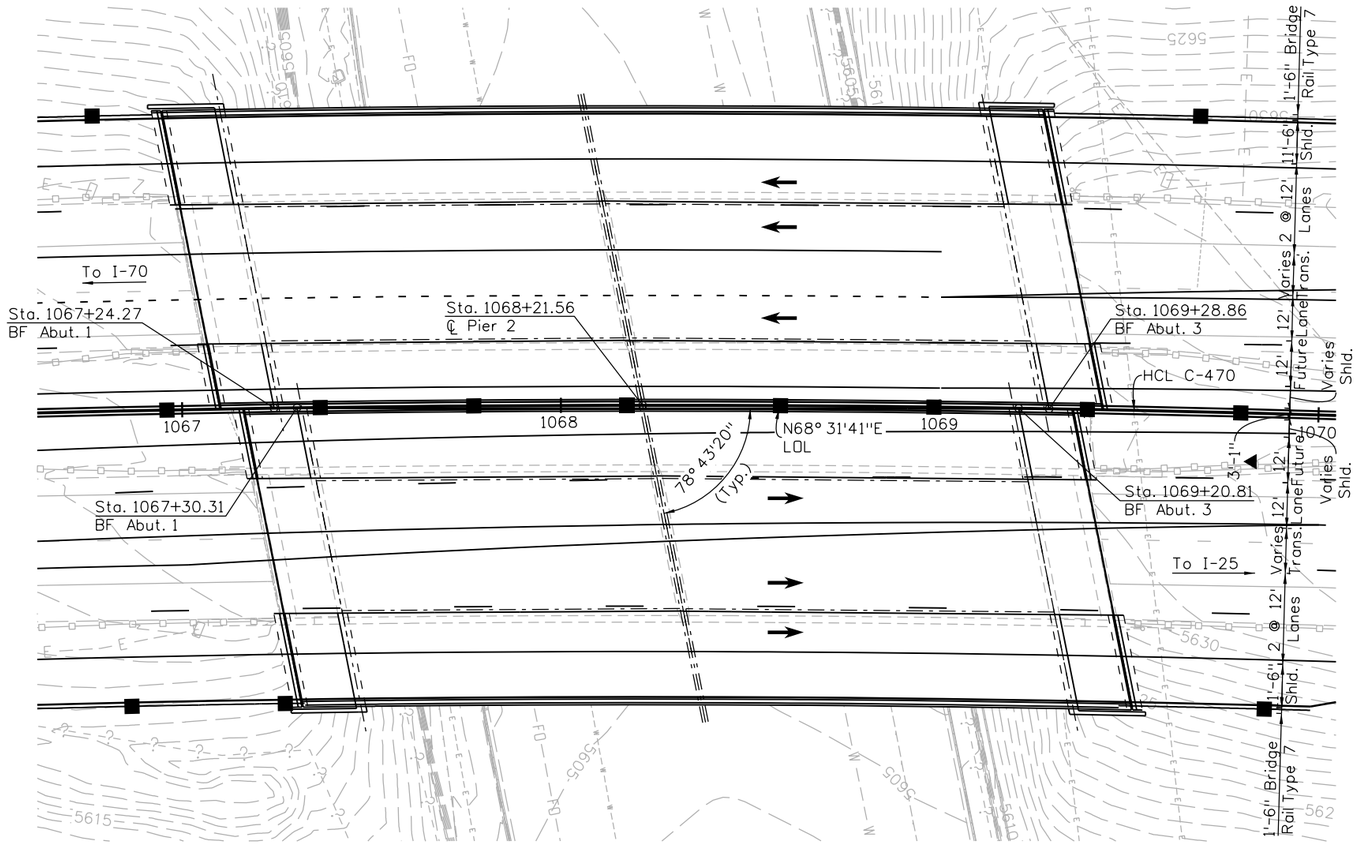

PLAN

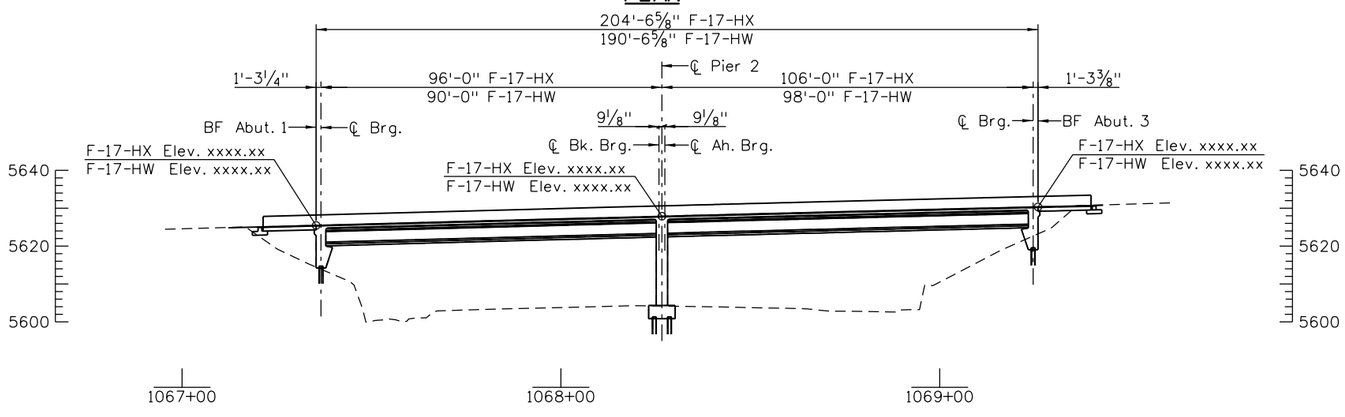

LONGITUDINAL SECTION

(Taken at ℄ Str. No. F-17-HW,
Str. No. F-17-HX Similar Except as Noted)

Know what's below.
Call before you dig.

N

▲ (2) 1'-6" Bridge Rail Type 7
1" Expansion Joint Material

Design			Detail			Quantities		
	INITIAL	DATE		INITIAL	DATE		INITIAL	DATE
Designed By	XXX	MM/YY	Detailed By	XXX	MM/YY	Quantities By	XXX	MM/YY
Checked By	XXX	MM/YY	Checked By	XXX	MM/YY	Checked By	XXX	MM/YY

kbkathrineberg 2:51:15 PM pw:\\WBOPWINTOU\Wilson_Projects\Documents\8100-TRN\CDOT\11-100-317-02_C470_SEQ\18999\Bridge\Drawings\F-17-HW_F-17-HX_Broadway\18999BRDG_Broadway_GenLay

Print Date: 1/13/2014
File Name: 18999BRDG_Broadway_GenLay
Horiz. Scale: 1:40 Vert. Scale: As Noted
Unit Information Unit Leader Initials

WILSON & COMPANY
999 18TH STREET, SUITE 2600
DENVER, CO 80202
PHONE: 303-297-2976
FAX: 303-297-2693

Sheet Revisions

Date:	Comments	Init.

Colorado Department of Transportation
DOT DEPARTMENT OF TRANSPORTATION
2000 South Holly Street
Denver, CO 80222
Phone: 303-757-9295 FAX: 303-757-9963
Region 1 JKE

As Constructed
No Revisions:
Revised:
Void:

C-470
OVER BROADWAY
GENERAL LAYOUT

Designer: XXXXXXXX
Detailer: K. Kathrineberg
Sheet Subset: BRIDGE
Structure Numbers: F-17-HW, F-17-HX
Subset Sheets: BXX of BXX

Project No./Code
Project Number
Code
Sheet Number