MEMORANDUM

MATERIALS AND GEOTECHNICAL BRANCH
GEOTECHNICAL PROGRAM
4670 HOLLY STREET, UNIT A, DENVER, COLORADO 80216 303-398-6604 FAX 303-398-6504

FBR 025A-022
I-25 over Santa Fe
SA 19208

TO: Jennifer Billings, Region 2 Pueblo Residency

FROM: David Thomas, Geotechnical Program

DATE: September 27, 2013

SUBJECT: **GEOTECHNICAL RECOMMENDATIONS FOR EXPANSION OF K-18-AX AND K-18-AY**

COLORADO LICENSED
DAVID B. THOMAS
46594
9/27/13
PROFESSIONAL ENGINEER

David B. Thomas

1.0 INTRODUCTION

This report presents geotechnical exploration observations and recommendations for the expansion of bridge structures K-18-AX and K-18-AY that carry I-25 over Santa Fe (US-50C Business) at Mile Marker 1 on US-50C. The current bridges are each two lane, four span bridges built in 1958. The plan is to close the median gab between the bridges to allow for widening of I-25. The roadway alignment will stay the same.

The purpose of the geotechnical exploration is to characterize physical properties of foundation materials at the proposed structure location. Foundation recommendations are provided for design and construction of the proposed structure. The scope of work was based on conversations with Don Garcia and Jennifer Billings, CDOT Region 2.

2.0 GEOTECHNICAL EXPLORATION

Geotechnical field activities were completed on June 25 and 26, 2013. Four test hole borings (TH1 through TH4) were advanced at the pier locations using a CME 550 all-terrain drill rig using hollow stem auger techniques. The borings were advanced along the proposed structure alignment as determined by rig access and utility clearances. The test hole locations are presented on the geology sheet in Attachment 1. Standard penetration tests using split spoon samplers were performed in the borings at select intervals in accordance with ASTM D-1586. Traffic control was provided by Brian Thompson, Rick Pendleton, and George Askew with CDOT Maintenance.

2.1 GEOLOGY

The geology is similar across the site. The geology consists of soft to very stiff sandy clay and loose to very dense sand overlaying very hard shale bedrock. Gravels and cobbles up to 6 inches in diameter were encountered in the sand creating difficult drilling conditions. The bedrock was encountered at 4,621 feet above mean sea level (amsl) (32 feet below ground surface [bgs]) in TH1 and TH2, 4,621 feet amsl (30 feet bgs) at TH3, and 4,622 feet amsl (30 feet bgs) in TH4. Groundwater was encountered at 4,637 feet amsl (16 feet bgs) in TH1 and TH2 and 4,637 feet

amsl (14.5 feet bgs) in TH3 and TH4. Flowing sands were encountered below the groundwater table. Groundwater may vary depending on seasonal fluctuations such as precipitation and snow melt. The geology sheet and boring logs are presented in Attachments 1 and 2, respectively.

2.2 PHYSICAL PROPERTIES

Analysis of the samples resulted in AASHTO classifications of A-1-a (0) to A-3 (0) for the silty/clayey sand and A-6 (5) for sandy clay. Detailed material properties at each boring are presented in the geology sheet in Attachment 1.

2.3 GEOCHEMICAL PROPERTIES

Bedrock samples were analyzed for percent sulfate, pH, percent chlorides, and resistivity. Based on the results of water soluble sulfate testing obtained from CP 2103, the potential for sulfate attack on Portland cement concrete in direct contact with the bedrock is classified as a Class 2 exposure per Table 601-2 of the CDOT 2011 Standard Specifications for Road and Bridge Construction Section 601. The results for resistivity, sulfates, and chlorides suggest a strong corrosion towards metal based on values per Table C.1 of FHWA report FHWAO-IF-3-017, Geotechnical Engineering Circular No. 7 - Soil Nail Walls. Detailed material properties are presented on the engineering geology sheet in Attachment 1.

3.0 RECOMMENDATIONS

The subsurface conditions are favorable for a bridge on drilled shaft or driven pile foundation. Retaining walls and excavations were not considered since the expansion will close the space between the bridges and use existing grades. Excavation and wall parameters can be provided if requested.

Speaking with the regional maintenance and resident personnel, historic trolley tracks and an old sewer line may impact construction. A trolley used to run up and down Santa Fe. The trolley used three separate tracks that were left in place and paved over during historic construction on Santa Fe in some areas. It is unknown if the tracks are still in place under the bridge although they were not encountered during drill operations. The sewer line is approximately 96 inches in diameter and runs down the center of Santa Fe. The current center pier is founded on battered piles to avoid the sewer line. Caisson drilling or pile driving may need to be designed to minimize the impact on the sewer line by vibrations or lateral forces during construction activities.

3.1 DRILLED SHAFTS

For drilled shafts embedded into the very hard bedrock, the allowable unit tip resistance (q_a) and the allowable unit side resistance (f_a) in kips per square foot (ksf) for the Allowable Stress Design (ASD) method, as determined using local practice, are presented in Table 1 along with the nominal unit tip resistance (q_p) and the nominal unit side resistance (q_s) required for the Load Resistance Factor Design (LRFD). The LRFD capacities are converted from ASD values.

TABLE 1. DRILLED SHAFT RESISTANCE VALUES

Location	Estimated Bedrock Elevation (ft amsl)	ASD		LRFD	
		q_a (ksf)	f_a (ksf)	q_p (ksf)	q_s (ksf)
North Pier	4,621	50	5.0	150	15
Center Pier	4,622				
South Pier	4,621				

Shafts should be completed into the very hard bedrock to obtain tip and side resistance. The recommended minimum bedrock penetration is l0 feet. Side resistance for axial capacity in the overburden soil should be ignored due to the difference in strain limits between the soil and bedrock. Also, the top 5 feet of bedrock penetration should be ignored for side resistance due to material weathering and potential disturbance from temporary casing. The side resistance values are applicable in both vertical directions without reduction. The nominal capacities assume a weighted load factor of 1.5. When using the LRFD method, we recommend a resistance factor of 0.5 be used for both unit tip and side resistance. Should a different load factor be applied for shafts, the resistance factor should be adjusted by dividing the new load factor by 3 to obtain the corresponding resistance factor. Difficult caisson drilling should be expected due to the hardness of the bedrock. If rock coring techniques are used for caisson construction, the bedrock socket should be roughened.

The recommended unit tip and side resistance values assume a minimum spacing of 3 shaft diameters, center-to center, between adjacent drilled shafts. Drilled shafts spaced at 2 diameters will require a reduction factor of 0.9. Reduction factors for spacing less than 2 diameters will require additional analysis and iteration with the structural engineer. Material properties for lateral load analysis are presented in Table 2.

Caving soil likely will occur in the sands below the groundwater. Slurry and/or casing will be needed to support the soils overlying the bedrock during drilled shaft excavation if caving occurs. Dewatering of the drilled holes also may be required prior to placement of the concrete. The potential for dewatering may increase with the amount of time the drill holes remain open. Alternatively, the concrete may be placed by tremie as described in CDOT 2011 *Standard Specifications for Road and Bridge Construction* Section 503 – Drilled Caissons. Due to these concerns, it is recommended that cross hole sonic logging tubes be installed in the caissons for construction quality assurance.

3.2 DRIVEN PILES

Driven piles will function as end bearing piles at this site with generally less than 5 feet of penetration into the very hard bedrock for Grade 50 steel without pre-drilling. Applying the structural limit state per AASHTO LRFD Table 10.5.5.2.3-1 for driven H-piles with Grade 50 steel in good driving conditions, a combined nominal unit side and tip resistance up to 30 kips

per square inch (ksi) times the cross sectional area of the pile is recommended. Per CDOT 2011 *Standard Specifications for Road and Bridge Construction* Section 502 – Piling, a pile driving analyzer will be used to establish the driving criteria. A resistance factor of 0.65 may be used in accordance with AASHTO LRFD bridge design specifications. We recommend that when ordering pile an estimated penetration of 10 feet into bedrock be used. In accordance with AASHTO LRFD bridge design Section 10.7.1.2, center to center pile spacing should not be less than 30 inches or 2.5 pile diameters. Group effects should be determined in accordance with Section 10 of AASHTO LRFD Bridge Design Specifications. Battered piles no steeper than 1:4 (H:V) may be used to provide lateral capacity. Additionally, pile tips are recommended because of the cobbles and the very hard bedrock. If used, the tips should be Associated Pile & Fitting Corp. (APF) HARD-BITE HP-77600 for hard rock, or equivalent. Material properties for lateral load analyses of the piles using LPILE or similar software are presented in Table 2.

TABLE 2. MATERIAL PROPERTIES FOR LATERAL LOAD ANALYSIS USING LPILE

Material	Internal Friction Angle ϕ (degrees)	Cohesion C (lb/ft^2)	Soil-Modulus k (lb/in^3)	Strain at ½ maximum principal stress ε_{50} (in/in)	Total Unit Weight (lb/ft^3)	Saturated Unit Weight γ_T (lb/ft^3)
Sand Above Water	34	0	90	–	125	135
Submerged Sand	34	0	60	–	125	135
Clay	0	800	100	0.01	120	130
Bedrock	0	8,000	2,000	0.004	130	140

4.0 SEISMIC DESIGN PARAMETERS

The AASHTO Specifications for LRFD Seismic Bridge Design classify the site as “D" and the seismic zone as “1" using Tables 3.10.3.1-1 and 3.10.6-1, respectively. Using the USGS AASHTO Earthquake Motion Parameters program, a seismic design spectrum plot was created for Spectral Acceleration vs. Time and is presented in Figure 2. Additional data from the program is included in Attachment 1.

Please contact the Geotechnical Program at 303-398-6604 with questions.

REVIEW: Conroy

COPY: Wrona – Region 2 RTD
Rowe – Region 2 South Program Engineer
DeHeart – Region 2 Pueblo Resident Engineer
Garcia – Region 2 Project Engineer
Groeneman – Staff Bridge
Wieden – Region 2 Materials
Schiebel/Hernandez – Staff Materials and Geotechnical
Ortiz – Geotechnical Program

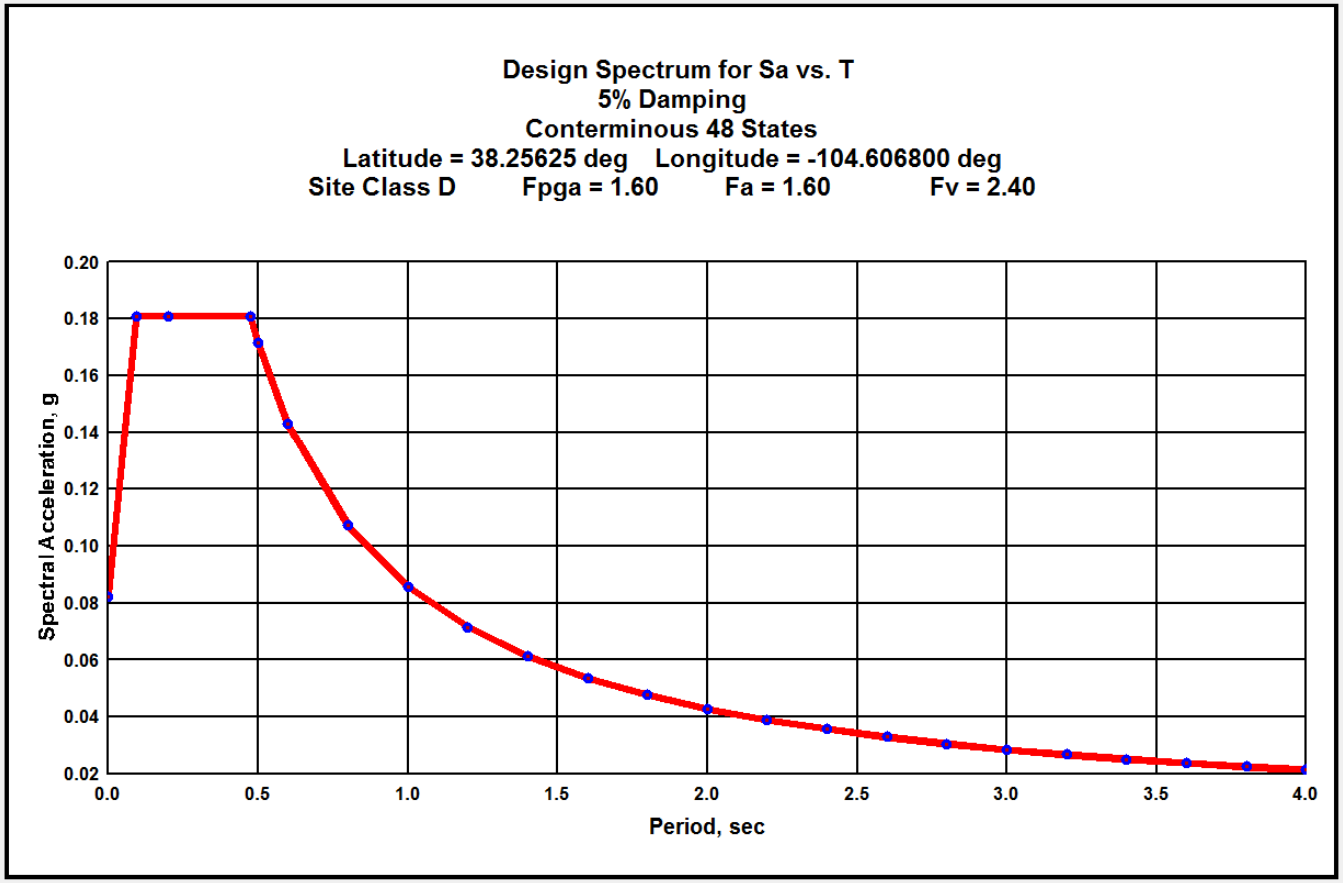

Graph Data	
Period, sec	Sa, g
0.00	0.0822
0.09	0.1809
0.20	0.1809
0.47	0.1809
0.50	0.1716
0.60	0.1430
0.80	0.1072
1.00	0.0858
1.20	0.0715
1.40	0.0613
1.60	0.0536
1.80	0.0477
2.00	0.0429
2.20	0.0390
2.40	0.0357
2.60	0.0330
2.80	0.0306
3.00	0.0286
3.20	0.0268
3.40	0.0252
3.60	0.0238
3.80	0.0226
4.00	0.0214

FIGURE 2. DESIGN SPECTRAL ACCELERATION VS. TIME

ATTACHMENT 1

GEOLOGY SHEET
FBR 025A-022
I-25 OVER SANTA FE
SA 19208

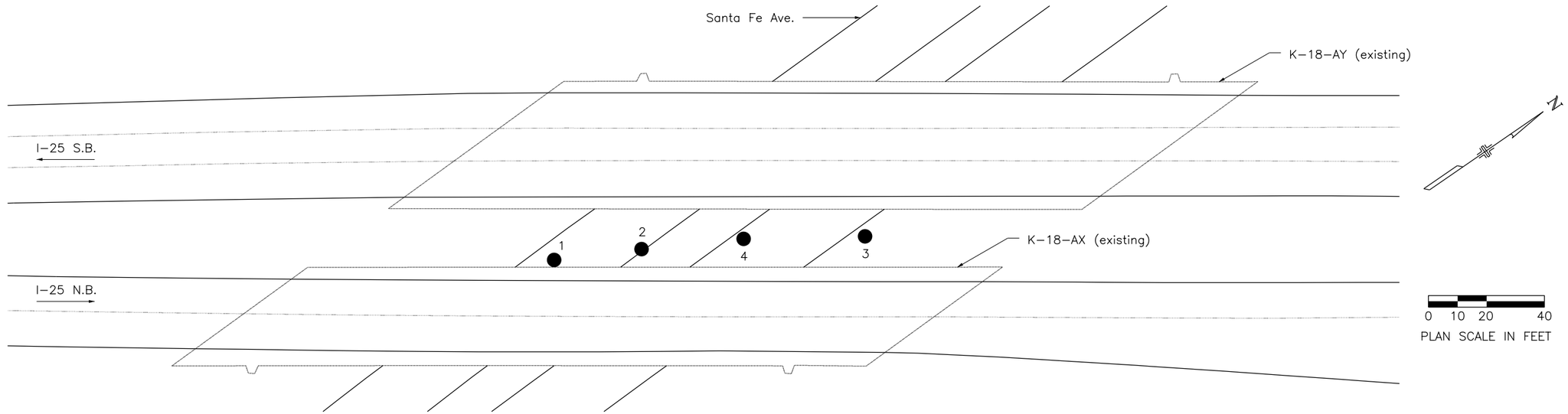

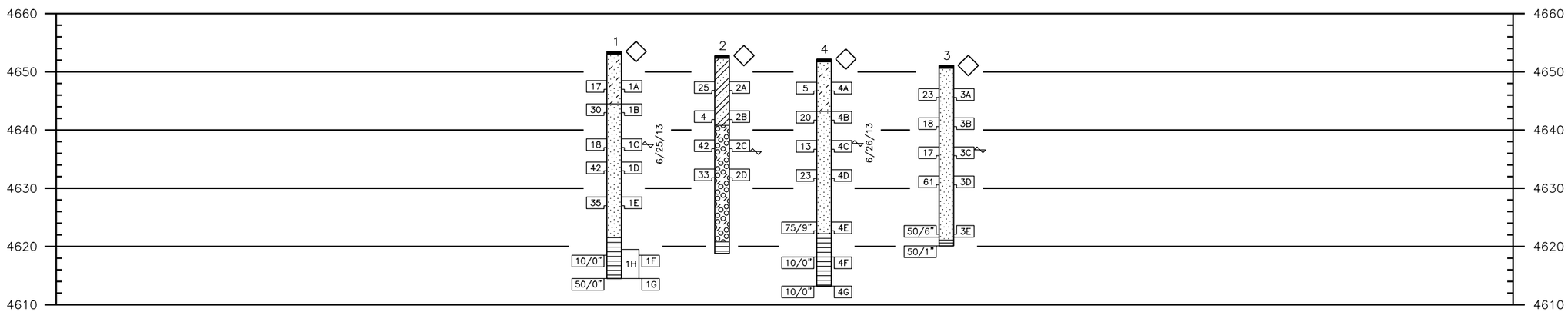

The boring logs of the above test holes and geotechnical report are on file in the Geotechnical Program Office, Staff Materials and Geotechnical Branch, (303)398–6601

SUMMARY OF TEST RESULTS

Sample Number	Depth (feet)	Classification: Corps of Engrs. or Visual	Classification: USCS	Classification: AASHTO	Grading Analysis (AASHTO) Percent: Gravel	Coarse Sand	Fine Sand	Silt and Clay	Atterberg Limits: L.L. L_W	P.L. P_W	P.I. I_W	Water Content W %	Chlorides (% mass)	Water Soluble Sulfates (% mass)	Soil pH ($H_2O/CaCl_2$)	Resistivity ohm–cm Saturated
1A	6.0	Clayey Sand	SC	A–2–6(1)	36.2	16.4	15.0	32.4	29	16	13	8.5	–	–	–	–
1B	10.0	Silty Sand	SP–SM	A–1–a(0)	56.4	23.4	13.3	6.9	NV	NV	NP	1.8	–	–	–	–
1E	26.0	Silty Sand	SP–SM	A–1–b(0)	24.9	32.5	37.5	5.1	NV	NV	NP	15.8	–	–	–	–
1H	36.0	Shale	–	–	–	–	–	–	–	–	–	–	0.03	0.576	8.85	800
2B	10.0	Clay	CL	A–6(5)	2.1	7.8	29.0	61.1	30	17	13	23.6	–	–	–	–
2C	15.0	Silty Gravel	GP–GM	A–1–a(0)	74.8	8.4	8.3	8.5	22	16	6	4.2	–	–	–	–
3A	5.0	Silty Sand	SM	A–2–4(0)	5.7	17.5	56.8	20.0	NV	NV	NP	15.3	–	–	–	–
3E	30.0	Sand	SP	A–3(0)	22.9	18.8	56.1	2.2	NV	NV	NP	20.9	–	–	–	–
4D	20.0	Silty Sand	SP–SM	A–1–b(0)	47.9	27.3	17.9	6.8	NV	NV	NP	12.7	–	–	–	–

TYPE OF MATERIAL

- Asphalt
- Sandy Clay
- Silty Sand
- Sand
- Sandy Silty Gravel
- Shale

Note: Boulders may be encountered at any depth

LEGEND

TEST BORING

- 3" Hole Size
- 1A Sample Number
- Blows per foot* 30
- R = Refusal on SPT
- C = California Sample
- 50/0.1 — 50 Blows in 0.1 ft
- Water Level
- Core Recovery 50
- R.Q.D. 25
- *Standard Penetration Test (AASHTO T 206–87(2000))

CONTINUOUS PENETRATION TEST

2 Inch Diameter Drive Point
30 Inch Free Fall
140 Pound Hammer

0 50 100
Blows Per Foot

- Location of Test Boring
- Location of Continuous Penetration Test
- W 3 Inch Wireline Boring
- Rotary Boring
- Auger Boring

Print Date: 9/23/2013
Drawing File Name: 19208geosheet02 santa fe.dgn
Horiz. Scale: 1:40 Vert. Scale: As Noted
Staff Geotechnical Program LTO

R-X

Sheet Revisions		
Date:	Comments	Init.

Colorado Department of Transportation
DOT DEPARTMENT OF TRANSPORTATION
4670 Holly Street, Unit A
Denver, CO 80216
Phone: 303-398-6601 FAX: 303-398-6504
Staff Geotechnical Program LTO

As Constructed
No Revisions:
Revised:
Void:

ENGINEERING GEOLOGY

Designer:	D. Thomas	Structure Numbers	K-18-AY
Detailer:	T. McNulty		K-18-AX
Sheet Subset:	Geology	Subset Sheets: XXX of XXX	

Project No./Code
FBR 025A-022
19208
Sheet Number XXX

ATTACHMENT 2

BORING LOGS
FBR 025A-022
I-25 OVER SANTA FE
SA 19208

GEOLOGICAL BORING LOG

DEPARTMENT OF TRANSPORTATION

BORING # 1

PROJECT ID	SA	PROJECT NAME	DATE DRILLED
FBR 025A-022	19208	I 25 & Santa Fe	6/25/13

ROUTE	COUNTY	STRUCTURE/BENT	LOCATION
I 25	Pueblo	K-18-AX/AY/S. Pier	Pueblo

TOP HOLE ELEV	TOTAL DEPTH	SURVEY INFO	GEOLOGIST/FOREMAN
4,653.5ft	39.0ft	N: 1,580,409 E: 3,257,321	D. Thomas/A. Moreno/M. Howton

ELEV (ft)	DEPTH (ft)	DESCRIPTION	SAMPLE TYPE	DEPTH (ft)	SAMPLE ID BLOWS	N-VALUE REC%/RQD%
	0.5	Asphalt				
		Sitly Sand, black, no odor, fine grained				
4650						
	5.0	**Sitly Sand,** mixed light brown to dark gray, medium dense		5.0	1A 10-9-8	17
4645						
	9.0	**Sand,** light brown, medium dense to dense, subrounded, gravels, flowing sand, cobbles in cuttings		9.0	1B 11-14-16	30
4640						
	15.0	medium dense		15.0	1C 9-12-6	18
4635						
	19.0	dense		19.0	1D 18-24-18	42
4630						
	25.0	dense, 8' flowing sand in augers after drive		25.0	1E 8-10-25	35
4625						
	30.0	skip drive, flowing sand				
	32.0	*drills harder*				
4620		**Shale,** dark gray blue, very hard				
				34.0	1H (34'-39') (grab)	
				35.0		10/0"
					1F 10/0"	
4615						
	39.0	Total Boring Depth 39.0ft		39.0	1G 50/0"	50/0"

SPT DATA (N-VALUE): 5, 10, 20, 40, 70

WELL DIAGRAM

SPT | CON'T | GRAB | SHELBY | CORE | CALIFORNIA

H_2O DEPTH (ft)	16.0				
DATE	6/25/13				
TIME					

NOTES: CME 550, Auger

GEOLOGICAL BORING LOG

DEPARTMENT OF TRANSPORTATION

BORING # 2

PROJECT ID	SA	PROJECT NAME	DATE DRILLED
FBR 025A-022	19208	I 25 & Santa Fe	6/25/13

ROUTE	COUNTY	STRUCTURE/BENT	LOCATION
I 25	Pueblo	K-18-AX/AY/Center Pier	Pueblo

TOP HOLE ELEV	TOTAL DEPTH	SURVEY INFO	GEOLOGIST/FOREMAN
4,652.8ft	34.0ft	N: 1,580,436 E: 3,257,335	D. Thomas/A. Moreno/M. Howton

ELEV (ft)	DEPTH (ft)	DESCRIPTION
	0.5	Asphalt
		Sandy Clay, olive gray, very stiff, gravel stuck in shoe
4650		
4645		
	9.5	sandy clay, mottled light brown to light gray, fine grained sand, soft to medium stiff
4640	12.0	**Sandy Silty Gravel,** light brown to light gray, dense
4635		
	19.5	sand, light brown, dense, gravel subangular
4630		
	24.5	skip drive - flowing sand, cobbles up to 6" diameter
4625		
	29.5	skip drive, 5' of flowing sand in auger
4620	32.0	*drills harder*
		Shale
	34.0	auger refusal, lose hole pulling steel, it was tilted due to cobble and couldn't pull straight
	34.0	Total Boring Depth 34.0ft
4615		

SAMPLE TYPE	DEPTH (ft)	SAMPLE ID BLOWS	N-VALUE REC%/RQD%
	4.5	2A 5-15-10	25
	9.5	2B 0-2-2	4
	14.5	2C 11-17-25	42
	19.5	2D 11-13-20	33

SPT DATA

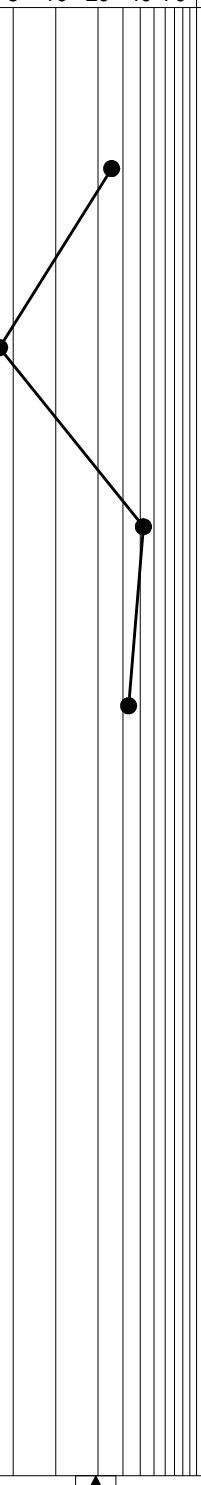

WELL DIAGRAM

SPT | CON'T | GRAB | SHELBY | CORE | CALIFORNIA

H_2O DEPTH (ft)	16.5				
DATE					
TIME					

NOTES: CME 550, Auger

GEOLOGIC BORING LOG I25 SANTA FE.GPJ CO_DOT.GDT 9/27/13

GEOLOGICAL BORING LOG

DEPARTMENT OF TRANSPORTATION

BORING # 3

PROJECT ID	SA	PROJECT NAME	DATE DRILLED
FBR 025A-022	19208	I 25 & Santa Fe	6/26/13

ROUTE	COUNTY	STRUCTURE/BENT	LOCATION
I 25	Pueblo	K-18-AX/AY/N. pier	Pueblo

TOP HOLE ELEV	TOTAL DEPTH	SURVEY INFO	GEOLOGIST/FOREMAN
4,651.1ft	31.0ft	N: 1,580,502 E: 3,257,375	B. Taylor/D. Thomas/Moreno/Howton

ELEV (ft)	DEPTH (ft)	DESCRIPTION	SAMPLE TYPE	DEPTH (ft)	SAMPLE ID BLOWS	N-VALUE REC%/RQD%
4650	0.5	Asphalt				
		Sand, with little clay, ~2' lens at end, light brown, medium to fine grained, subangular, medium dense sand				
				4.0	3A 3-8-15	23
4645						
	9.0	**Sand with Gravel,** light brown, medium dense		9.0	3B 3-7-11	18
4640						
	14.0	sandy gravel, light brown, medium dense, no recovery		14.0	3C 5-4-13	17
4635						
	19.0	~5' flowing sand in auger, gravelly sand, light brown-gray, well graded, very dense		19.0	3D 7-16-45	61
4630		5' flowing sand in auger ~5" diameter cobbles				
4625						
	29.0	gravel & cobbles, flowing sand, light gray, very dense		29.0	3E 50/6"	50/6"
	30.0					
4620	31.0	**Shale,** very hard 1.5 hour to go 1', auger refusal, no recovery, bit lost 2 teeth		31.0	50/1"	50/1"
		Total Boring Depth 31.0ft				
4615						

SPT DATA (N-VALUE): 5 10 20 40 70

WELL DIAGRAM

SPT | CON'T | GRAB | SHELBY | CORE | CALIFORNIA

H_2O DEPTH (ft)	14.5				
DATE					
TIME					

NOTES: CME 550, Auger

GEOLOGICAL BORING LOG

DEPARTMENT OF TRANSPORTATION

BORING # 4

PROJECT ID	SA	PROJECT NAME	DATE DRILLED
FBR 025A-022	19208	I 25 & Santa Fe	6/26/13

ROUTE	COUNTY	STRUCTURE/BENT	LOCATION
I 25	Pueblo	K-18-AX/AY/Center Pier	Pueblo

TOP HOLE ELEV	TOTAL DEPTH	SURVEY INFO	GEOLOGIST/FOREMAN
4,652.2ft	39.0ft	N: 1,580,467 E: 3,257,352	D. Thomas/A. Moreno/M. Howton

ELEV (ft)	DEPTH (ft)	DESCRIPTION	SAMPLE TYPE	DEPTH (ft)	SAMPLE ID BLOWS	N-VALUE REC%/RQD%
	0.5	**Asphalt**				
4650		**Silty Sand,** light brown, loose, fine grained				
	4.0	no recovery		4.0	4A 3-1-4	5
4645						
	9.0	**Sand with Gravel,** light brown, medium dense, subrounded, gravel in shoe		9.0	4B 7-9-11	20
4640						
	14.0	gravels & cobbles		14.0	4C 5-5-8	13
4635						
				19.0	4D 18-13-10	23
4630						
	24.0	skip drive - flowing sand in auger				
4625						
	29.0	skip drive, 13' of flowing sand in auger, pull augers, replace 2 teeth, redrill to 30'		29.0	4E 23-25-50/3"	75/9"
	30.0	*drills harder*				
4620		**Shale,** light gray blue, very hard				
				34.0	4F 10/0"	10/0"
4615						
	39.0	Total Boring Depth 39.0ft		39.0	4G 10/0"	10/0"

SPT DATA (N-VALUE): 5, 10, 20, 40, 70

WELL DIAGRAM

SPT | CON'T | GRAB | SHELBY | CORE | CALIFORNIA

H_2O DEPTH (ft)	▼ 14.5				
DATE	6/26/13				
TIME					

NOTES: CME 550, Auger

ATTACHMENT 3
FBR 025A-022, I-25 over Santa Fe, SA 19208
2007 AASHTO Bridge Design Guidelines

AASHTO Spectrum for 7% PE in 75 years
Latitude = 38.256248
Longitude = -104.606759
Site Class B
Data are based on a 0.05 deg grid spacing.

Period (sec)	Sa (g)	
0.0	0.051	PGA - Site Class B
0.2	0.113	Ss - Site Class B
1.0	0.036	S1 - Site Class B

Map Response Spectra for Site Class B
Ss and S1 = Mapped Spectral Acceleration Values
Site Class B
Data are based on a 0.05 deg grid spacing.

Period (sec)	Sa (g)	Sd in.	
0.000	0.051	0.000	T = 0.0, Sa = PGA
0.063	0.113	0.004	T = To, Sa = Ss
0.200	0.113	0.044	T = 0.2, Sa = Ss
0.316	0.113	0.110	T = Ts, Sa = Ss
0.400	0.089	0.140	
0.600	0.060	0.210	
0.800	0.045	0.279	
1.000	0.036	0.349	T = 1.0, Sa = S1
1.200	0.030	0.419	
1.400	0.026	0.489	
1.600	0.022	0.559	
1.800	0.020	0.629	
2.000	0.018	0.698	
2.200	0.016	0.768	
2.400	0.015	0.838	
2.600	0.014	0.908	
2.800	0.013	0.978	
3.000	0.012	1.048	
3.200	0.011	1.118	
3.400	0.011	1.187	
3.600	0.010	1.257	
3.800	0.009	1.327	
4.000	0.009	1.397	

Spectral Response Accelerations SDs and SD1
Latitude = 38.256248
Longitude = -104.606759
As = FpgaPGA, SDs = FaSs, and SD1 = FvS1
Site Class D - Fpga = 1.60, Fa = 1.60, Fv = 2.40
Data are based on a 0.05 deg grid spacing.

Period (sec)	Sa (g)	
0.0	0.082	As - Site Class D
0.2	0.181	SDs - Site Class D
1.0	0.086	SD1 - Site Class D

Design Response Spectra for Site Class D
As = FpgaPGA, SDs = FaSs, SD1 = FvS1
Site Class D - Fpga = 1.60, Fa = 1.60, Fv = 2.40
Data are based on a 0.05 deg grid spacing.

Period (sec)	Sa (g)	Sd in.	
0.000	0.082	0.000	T = 0.0, Sa = As
0.095	0.181	0.016	
0.200	0.181	0.071	T = 0.2, Sa = SDs
0.474	0.181	0.398	T = Ts, Sa = SDs
0.500	0.172	0.419	
0.600	0.143	0.503	
0.800	0.107	0.671	
1.000	0.086	0.838	T = 1.0, Sa = SD1
1.200	0.071	1.006	
1.400	0.061	1.173	
1.600	0.054	1.341	
1.800	0.048	1.509	
2.000	0.043	1.676	
2.200	0.039	1.844	
2.400	0.036	2.012	
2.600	0.033	2.179	
2.800	0.031	2.347	
3.000	0.029	2.515	
3.200	0.027	2.682	
3.400	0.025	2.850	
3.600	0.024	3.017	
3.800	0.023	3.185	
4.000	0.021	3.353	