Condition Assessment and Rehabilitation Recommendations (DRAFT)

Northern Avenue over I-25 Bridge (L-18-AQ)
Mesa Avenue over I-25 Bridge (L-18-AU)
I-25 NB and SB over US 50 Business Bridges (K-18-AX and K-18-AY)
US 50 Business over Arkansas River Bridge (K-18-R)
I-25 NB and SB over Indiana Avenue Bridges (L-18-M and L-18-W)

Project No. FBR 3501-013
CDOT Region 2

January 2013

ATKINS

Plan Design Enable

Table of Contents

Chapter	Pages
1. Executive Summary	1-1
1.1. Project Description and Scope of Work	1-2
1.2. Northern Avenue over I-25 Bridge (L-18-AQ)	1-4
1.3. Mesa Avenue over I-25 Bridge (L-18-AU)	1-4
1.4. I-25 NB and SB over US 50 Business Bridges (K-18-AX and K-18-AY)	1-4
1.5. US 50 Business SB over Arkansas River Bridge (K-18-R)	1-5
1.6. I-25 NB and SB over Indiana Avenue Bridges (L-18-M and L-18-W)	1-6
2. Proposed Rehabilitation Criteria	2-1
2.1. Introduction	2-2
2.2. Rehabilitation Categories	2-2
2.3. Load Capacity Analysis	2-6
2.4. Rehabilitation Criteria Evaluation and Other Considerations	2-6
3. Northern Avenue over I-25 Bridge (L-18-AQ)	3-1
3.1. Existing Bridge Condition	3-2
3.1.1. Description of Structure	3-2
3.1.2. Sufficiency, Condition, and Appraisal Rating Summary	3-3
3.1.3. Load Capacity Analysis	3-4
3.2. Structural Assessment Findings	3-4
3.2.1. Superstructure	3-6
3.2.2. Substructure	3-7
3.3. Rehabilitation Evaluation	3-39
3.3.1. Rehabilitation Alternatives	3-39
3.3.2. Load Capacity Analysis of Rehabilitation Alternatives	3-42
3.3.3. Quantities/Cost Estimates	3-44
3.3.4. Rehabilitation Alternative Evaluation	3-44
3.3.5. Recommendations	3-46
3.4. Conceptual Plans	3-47
4. Mesa Avenue over I-25 Bridge (L-18-AU)	4-1
4.1. Existing Bridge Condition	4-2
4.1.1. Description of Structure	4-2
4.1.2. Sufficiency, Condition, and Appraisal Rating Summary	4-3
4.1.3. Load Capacity Analysis	4-4
4.2. Structural Assessment Findings	4-4

4.2.1. Superstructure 4-6
4.2.2. Substructure 4-18
4.3. Rehabilitation Evaluation 4-33
4.3.1. Rehabilitation Alternatives 4-33
4.3.2. Load Capacity Analysis of Rehabilitation Alternatives 4-35
4.3.3. Quantities/Cost Estimates 4-37
4.3.4. Rehabilitation Alternative Evaluation 4-37
4.3.5. Recommendations 4-39
4.4. Conceptual Plans 4-40

5. I-25 NB and SB over US 50 Business Bridges (K-18-AX and K-18-AY) 5-1
5.1. Existing Bridge Condition 5-2
5.1.1. Description of Structure 5-2
5.1.2. Sufficiency, Condition, and Appraisal Rating Summary 5-4
5.1.3. Load Capacity Analysis 5-5
5.2. Structural Assessment Findings 5-5
5.2.1. Superstructure 5-7
5.2.2. Substructure 5-27
5.3. Rehabilitation Evaluation 5-36
5.3.1. Rehabilitation Alternatives 5-36
5.3.2. Load Capacity Analysis of Rehabilitation Alternatives 5-38
5.3.3. Quantities/Cost Estimates 5-41
5.3.4. Rehabilitation Alternative Evaluation 5-41
5.3.5. Recommendations 5-43
5.4. Conceptual Plans 5-44

6. US 50 Business EB over Arkansas River Bridge (K-18-R) 6-1
6.1. Existing Bridge Condition 6-2
6.1.1. Description of Structure 6-2
6.1.2. Sufficiency, Condition, and Appraisal Rating Summary 6-3
6.1.3. Load Capacity Analysis 6-4
6.2. Structural Assessment Findings 6-5
6.2.1. Superstructure 6-6
6.2.2. Substructure 6-17
6.3. Rehabilitation Evaluation 6-20
6.3.1. Rehabilitation Alternatives 6-20
6.3.2. Load Capacity Analysis of Rehabilitation Alternatives 6-25
6.3.3. Quantities/Cost Estimates 6-29
6.3.4. Rehabilitation Alternative Evaluation 6-29
6.3.5. Recommendations 6-31

6.4. Conceptual Plans 6-32

7. I-25 NB and SB over Indiana Avenue Bridges (L-18-M and L-18-W) 7-1
7.1. Existing Bridge Condition 7-2
7.1.1. Description of Structure 7-2
7.1.2. Sufficiency, Condition, and Appraisal Rating Summary 7-3
7.1.3. Load Capacity Analysis 7-4
7.2. Structural Assessment Findings 7-4
7.2.1. Superstructure 7-6
7.2.2. Substructure 7-7
7.3. Rehabilitation Evaluation 7-11
7.3.1. Rehabilitation Alternatives 7-11
7.3.2. Load Capacity Analysis of Rehabilitation Alternatives 7-13
7.3.3. Quantities/Cost Estimates 7-16
7.3.4. Rehabilitation Alternative Evaluation 7-16
7.3.5. Recommendations 7-18
7.4. Conceptual Plans 7-19

Appendix
A. Suggested CDOT Rating and Load Policy Changes A-2
B. Deterioration Rates A-11
C. Rehabilitation Cost Estimates
a. Northern Avenue over I-25 Bridge (L-18-AQ) A-15
b. Mesa Avenue over I-25 Bridge (L-18-AU) A-16
c. I-25 NB and SB over US 50 Business Bridges (K-18-AX and K-18-AY) A-21
d. US 50 Business EB over Arkansas River Bridge (K-18-R) A-27
e. I-25 NB and SB over Indiana Avenue Bridges (L-18-M and L-18-W) A-30
D. Northern Avenue over I-25 Bridge (L-18-AQ) Existing Bridge Documents
a. Existing Bridge Plans A-36
b. Existing Bridge Inspection Reports and Previous Load Rating Information A-47
E. Mesa Avenue over I-25 Bridge (L-18-AU) Existing Bridge Documents
a. Existing Bridge Plans A-94
b. Existing Bridge Inspection Reports and Previous Load Rating Information A-105
F. I-25 NB and SB over US 50 Business Bridges (K-18-AX and K-18-AY) Existing Bridge Documents
a. Existing Bridge Plans A-281
b. Existing Bridge Inspection Reports and Previous Load Rating Information A-311

G. US 50 Business EB over Arkansas River Bridge (K-18-R) Existing Bridge Documents
    a. Existing Bridge Plans A-349
    b. Existing Bridge Inspection Reports and Previous Load Rating Information A-384
H. I-25 NB and SB over Indiana Avenue Bridges (L-18-M and L-18-W) Existing Bridge Documents
    a. Existing Bridge Plans A-535
    b. Existing Bridge Inspection Reports and Previous Load Rating Information A-567
I. Miscellaneous Details A-602

CHAPTER 1

Executive Summary

1.1 Project Description and Scope of Work

The objectives of this report are to provide condition assessment and rehabilitation recommendations for several bridges in Pueblo, Colorado. Field inspection, evaluation of existing documents, and load capacity analysis were performed to assess the condition of the existing bridges. Rehabilitation concepts, design criteria, and construction cost estimates were developed based on the existing bridge evaluation in order to extend the service life and improve safety of these bridges.

This report contains the condition assessment and rehabilitation evaluation of the following bridges in Pueblo, Colorado (see Figure 1-1).

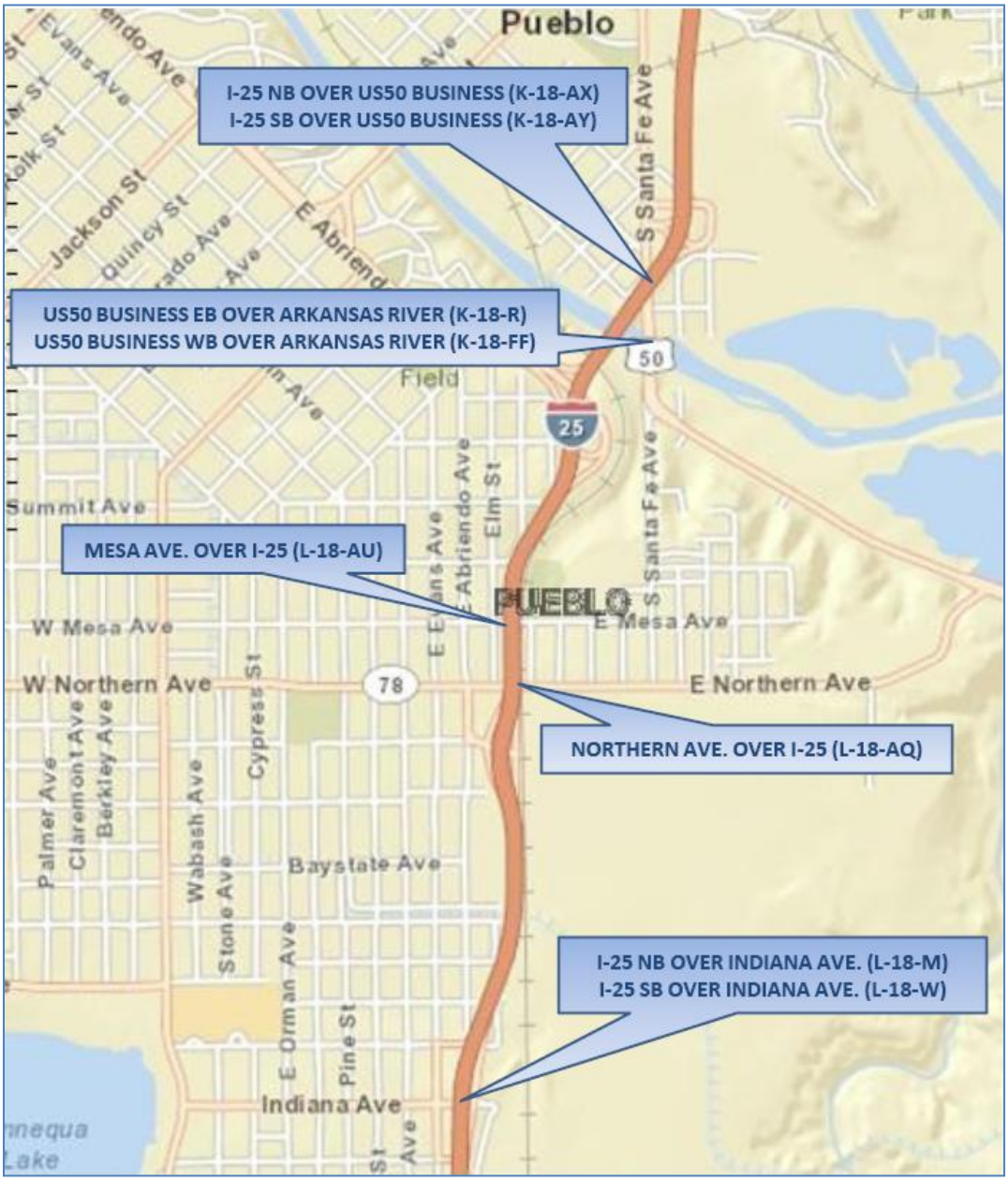

Figure 1-1 Project Location Map

The bridges evaluated in this report are either structurally deficient or functionally obsolete based on latest bridge inspection reports (see Table 1-1).

Bridge Name	Bridge Designation	Sufficiency Rating	Structurally Deficient?	Functionally Obsolete?	Deck (Item 58)	Superstructures (Item 59)	Substructures (Item 60)	Structural Condition (Item 67)	Deck Geometry (Item 68)	Underclearances (Item 69)	Waterway Adequacy (Item 71)	Approach Roadway Alignment (Item 72)
Northern Ave. over I-25	L-18-AQ	39.0	YES		6	6	4	4	2	4	N	8
Mesa Ave. over I-25	L-18-AU	49.8	YES		4	6	4	4	6	3	N	8
I-25 NB over US 50 Business (Santa Fe Ave.)	K-18-AX	49.7		YES	5	7	5	5	4	3	N	8
I-25 SB over US 50 Business (Santa Fe Ave.)	K-18-AY	60.5		YES	6	7	6	5	3	3	N	8
US 50 Business EB (Santa Fe Ave.) over Arkansas River	K-18-R	47.2	YES		4	4	5	4	2	N	9	8
I-25 NB over Indiana Ave.	L-18-M	26.6	YES		4	5	4	4	2	4	N	8
I-25 SB over Indiana Ave.	L-18-W	46.8		YES	5	5	5	4	2	4	N	8

Structurally Deficient
1. A condition rating of 4 or less for
Item 58 - Deck or
Item 59 - Superstructures or
Item 60 - Substructures or
Item 62 - Culvert and Retaining Walls or
2. An appraisal of 2 or less for
Item 67 - Structural Condition or
Item 71 - Waterway Adequacy

Functionally Obsolete
1. An appraisal rating of 3 or less for
Item 68 - Deck Geometry or
Item 69 - Underclearances or
Item 72 - Approach Roadway Alignment or
2. An appraisal of 3 or less for
Item 67 - Structural Condition or
Item 71 - Waterway Adequacy

Any bridge classified as structurally deficient is excluded from the functionally obsolete category.

Table 1-1 Sufficiency, Condition, and Appraisal Rating Summary

Atkins performed a visual assessment of these bridges in Pueblo, Colorado on October 30th, 31st, and November 1st, 2012. Region 2 Colorado Department of Transportation (CDOT) assisted with traffic control during the inspection. CDOT also provided a bucket-lift crane for the inspection of the piers on October 30th and 31st. A scissor lift was used on November 1st to inspect the piers along Santa Fe Avenue. The field inspection of bridges K-18-R and K-18-FF was limited to evaluation of the superstructure components accessible by foot. The inspection underside these bridges was limited to the areas over the pedestrian trail parallel to the Arkansas River.

Bridges K-18-AY and K-18-FF were not part of the scope of work but were inspected since they are parallel bridges to K-18-AX and K-18-R, respectively, and may become an integral part of the traffic control pattern for those bridges in need of rehabilitation.

All the bridges presented in this report, except K-18-AY and K-18-FF, are on the Colorado Bridge Enterprise list and may be replaced due to corridor improvement in the future. K-18-AY is not on the Colorado Bridge Enterprise list but included in the report since it is adjacent to K-18-AX, listed as functionally obsolete based on the latest bridge inspection report. The two adjacent structures may be connected as part of the rehabilitation/replacement to improve the sufficiency and appraisal ratings. K-18-FF is also not on the CDOT Bridge Enterprise List because the bridge was not reported as a deficient structure based on the latest inspection report. However, K-18-FF will be used to carry temporary traffic or widened depending on the rehabilitation level recommended for K-18-R.

1.2 Northern Avenue over I-25 Bridge (L-18-AQ)

The 289.75-ft long bridge, built in 1957, consists of five spans with non-composite, wide flange steel rolled girders, carrying two lanes in each direction. The bridge spans over I-25 southbound/northbound traffic and the BNFS railroad lines.

A visual assessment of the bridge showed typical corrosion damage of the cross frame members and steel rolled girders over the piers associated with the damage to the joints and deck. There were joints in the deck at all the piers. The connection angle between the ends of the girders at Pier 2 exhibited signs of deformation, rust and cracks. The deck underside had spalls and delaminated areas with exposed and corroded reinforcing bars. The pier caps exhibited concrete section loss exposing the longitudinal reinforcing bars and stirrups. The concrete deck at the bridge rail posts showed wide cracks and deterioration. The pedestrian rails had some damage associated with vehicular impact. The northeast retaining wall had noticeable cracking and deflected outward.

Level B, Intermediate Rehabilitation, which consists of substantial repair work to the concrete deck and substructure components, was selected as the recommended alternative for this bridge. The estimated probable construction cost for this rehabilitation alternative is approximately $1,039,000. The cost per square foot and cost per square foot over the estimated life expectancy of 30 years are $62.25/SF and $2.08/SF/year, respectively. The functional obsolete (FO) classification can be corrected by re-striping for two lanes with shoulders.

1.3 Mesa Avenue over I-25 Bridge (L-18-AU)

The 255.25-ft long bridge, built in 1957, consists of five spans with non-composite, wide flange steel rolled girders, carrying two lanes in each direction. The bridge spans over I-25 southbound/northbound traffic and the BNFS railroad lines.

The damage and deterioration of structural components are similar to the Northern Avenue over I-25 Bridge. A visual assessment of the bridge showed typical corrosion damage of the cross frame members and steel rolled girders over the piers associated with the damage to the joints and deck. The deck underside had spalls and delaminated areas with exposed and corroded reinforcing bars. The pier caps exhibited concrete section loss exposing the longitudinal reinforcing bars and stirrups. Delamination and concrete spalls due to the deficiency in the concrete deck, which was constructed with deck joints, were visible on the Pier 2 columns. The concrete deck at the bridge rail posts showed wide cracks and deterioration. The pedestrian rails had some damage associated with a vehicular impact.

Level A, Minimal Rehabilitation, which consists of moderate repair work to the concrete deck and substructure components, was selected as the recommended alternative for this bridge. The estimated probable construction cost for this rehabilitation alternative is approximately $476,000. The cost per square foot and cost per square foot over the estimated life expectancy of 20 years are $35.09/SF and $1.75/SF/year, respectively. Level A Rehabilitation was chosen due to the very low deteriorating rates, continuity of the deck at the piers, and the light traffic volume. Therefore, 30 year of life can be achieved with this level of rehabilitation. The functional obsolete (FO) classification can be corrected by adjusting re-striping I-25 SB to provide a standard outside shoulder.

1.4 I-25 NB and SB over US 50 Business Bridges (K-18-AX and K-18-AY)

The 232-ft long parallel bridges, built in 1958, consist of four spans with non-composite, wide flange steel rolled girders, carrying I-25 traffic over US 50 Business (Santa Fe Avenue). K-18-AX carries two lanes of traffic; whereas; K-18-AY carries three lanes of traffic where the outside lane is considered an on-ramp lane. These bridges are classified as functionally obsolete due to inadequate shoulders.

A visual assessment of K-18-AX and K-18-AY showed typical corrosion damage of the cross frame members and steel rolled girders over the piers associated with the damage to the joints and deck. The bridge decks were built with construction joints at all the piers. Hence, most of the structural damages are at the tops of the pier caps and the steel diaphragms. The deck underside had spalls and delaminated areas with exposed and corroded reinforcing bars. Span 2 of bridge K-18-AX showed bottom flange deformation and section loss due to overhead vehicular impacts. The pier caps exhibited concrete section loss exposing the longitudinal reinforcing bars and stirrups.

Level B, Intermediate Rehabilitation, which consists of substantial repair work to the concrete deck and substructure components, was selected as the recommended alternative for K-18-AX. The estimated probable construction cost for this rehabilitation alternative is approximately $1,214,000. The cost per square foot and cost per square foot over the estimated life expectancy of 30 years are $88.14/SF and $2.94/SF/year, respectively.

Level A, Minimal Rehabilitation, which consists of substantial repair work to the concrete deck and substructure components, was selected as the recommended alternative for K-18-AY. The estimated probable construction cost for this rehabilitation alternative is approximately $376,000. The cost per square foot and cost per square foot over the estimated life expectancy of 20 years are $38.76/SF and $1.94/SF/year, respectively.

The high cost estimate for the rehabilitation for K-18-AX was associated with the cost of widening the bridge to the inside in order to close the median. The median closure is needed In order to facilitate staging the traffic around the work zone for both bridges and provide standard width and shoulders for both structures in the final condition after rehabilitation. Another big portion of the cost had to do with the large amount of substructure construction with significant skews. The remaining functional obsolete (FO) classification can be corrected by moving the Santa Ave. SB sidewalk outside the pier columns or re-striping to a single lane. The correction of the problems mentioned in the report, addition of preservation measures, and better condition of K-18-AY should provide about 30 years of additional life.

1.5 US 50 Business EB over Arkansas River Bridge (K-18-R)

The 286-ft long bridge, built in 1924, consists of a single span through truss structure over the Arkansas River and pedestrian trail. This bridge is on the National Register of Historic Places. The bridge currently carries two lanes of eastbound traffic.

Typical corrosion of the steel members and local deformation of members as a result of vehicle collision are typical damage to the vertical and diagonal truss members noticed during the inspection. There were joints in the deck at all the floor beams. The gusset plates in the floor system have experienced section loss due to inadequate drainage. The deck underside had spalls and delaminated areas with exposed and corroded reinforcing bars. The top of deck had cracks in various locations along the bridge.

Level A, Minimal Rehabilitation, which consist of deck replacement, repair and preservation work, was selected as the recommended alternative for this bridge. The estimated probable construction cost for this rehabilitation alternative is approximately $972,000. The cost per square foot and cost per square foot over the estimated life expectancy of 20 years are $85.50/SF and $4.28/SF/year, respectively. The adjacent bridge, K-18-FF, should also be rehabilitated to protect K-18-R. However, the rehabilitation will be minimal. The estimated cost for K-18-FF is approximately $97,000. The functional obsolete (FO) classification can be corrected by changing the striping to one lane and modifying the portal frame. The new deck, splash protection, paint, and slow deterioration rates should provide well over the nominal 20 year life for this type of rehabilitation, at least 30 years, probably more.

1.6 I-25 NB and SB over Indiana Avenue Bridges (L-18-M and L-18-W) *(CHAPTER IN PROGRESS)*

The 123-ft long parallel bridges, built in 1956, consist of three spans with non-composite, wide flange rolled steel girders, carrying I-25 traffic over Indiana Avenue.

Similar to K-18-AX and K-18-AY, visual assessment of L-18-M and L-18-W showed typical corrosion damage of the cross frame members and steel rolled girders over the piers associated with the damage to the joints and deck. There were joints in the deck at all the piers. The deck underside had spalls and delaminated areas with exposed and corroded reinforcing bars. The pier caps exhibited concrete section loss exposing the longitudinal reinforcing bars and stirrups. A few columns showed signs of delamination.

Level B, Intermediate Rehabilitation, which consists of substantial repair work to the concrete deck and substructure components, was selected as the recommended alternative for L-18-M. The estimated probable construction cost for this rehabilitation alternative is approximately $704,000. The cost per square foot and cost per square foot over the estimated life expectancy of 30 years are $198.61/SF and $6.62/SF/year, respectively.

Level B, Intermediate Rehabilitation, which consists of substantial repair work to the concrete deck and substructure components, was selected as the recommended alternative for L-18-W. The estimated probable construction cost for this rehabilitation alternative is approximately $376,000. The cost per square foot and cost per square foot over the estimated life expectancy of 30 years are $102.40/SF and $3.41/SF/year, respectively.

Consideration should be given to deck or bridge replacement if these structures are to remain after corridor relocation. The cost per square foot is relative high due to the smaller structures compared to others evaluated in this report.

CHAPTER 2

Proposed Rehabilitation Criteria

2.1. Introduction

Rehabilitation criteria can be evaluated based on a number of characteristics such as:

A. Safety
B. Traffic Capacity
C. Load Capacity
D. Durability
E. Appearance

Current CDOT rehabilitation criteria are out-of-date and will not be used for this project. Suggested changes to the CDOT Bridge Rating Manual and Bridge Design Manual live load policy are in Appendix A. These suggested changes along with the proposed rehabilitation criteria presented in this report will be used for this project.

In addition, this work is funded by the Colorado Bridge Enterprise. The Colorado Bridge Enterprise has some additional requirements, namely a desired rehabilitated life of at least 30 years due to the length or their bonding, condition rating greater than 6 of the deck, superstructure, and substructure after the rehabilitation, and the bridge not considered scour critical. The required structure condition ratings can be relaxed if there is a demonstration of acceptable behavior over the minimum 30-year life. Note these inspection ratings are based on visual estimates of condition that incorporate an element of projection of deterioration to future, more serious damage. The condition ratings do not always reflect true risk for the particular member and they may not change after a member is repaired or rehabilitated unless the cosmetic visual indications of past deterioration are eliminated as well. Examples are listed in the section under Rehabilitation Alternative Evaluation in each chapter. Colorado Bridge Enterprise has no objection to a more realistic definition of functional obsolescence. CDOT Region 2 expects that these bridges will be replaced at some time in the future due to a corridor realignment, though precise details and when funding will become available are yet to be determined.

2.3. Rehabilitation Categories

Following is a general description of rehabilitation categories:

Level A - Minimal Rehabilitation

This level of rehabilitation is intended for structures with an economic life generally less than 20 years. Minimal rehabilitation may not be economical if cost is much over $40/SF or $2/SF/ year of life. The sufficiency rating should generally be over 50 after this rehabilitation, which involves resolution of structurally deficient (SD) and functionally obsolete (FO) issues. FO issues may need to be recalculated based on Level of Service (LOS) in order to improve the appropriate appraisal rating to clear the FO classification.

This level of rehabilitation is often used to extend the economic life of a structure prior to future replacement and is suited for inclusion in resurfacing projects to capture beneficial use of the project overhead, oversight, and traffic control. Note that the bridge life is dependent on the rate of deterioration, effectiveness of practical maintenance, and the minimum acceptable endpoint. It is possible that minimal rehabilitations will provide a bridge life of 30 years due to benign combinations of initial condition of the structure, use of the structure, and local environment.

Typical works for this rehabilitation category include the following (Note that the letters in parenthesis represent the rehabilitation criteria characteristics mentioned at the beginning of this chapter):

- **Structurally deficient or functionally obsolete evaluation.**

  Clear all structurally deficient (SD) issues which may include temporary repair. Note that bridge decks are no longer a federal priority compared to other SD issues. Consideration should be given to the condition at the top of the deck, risk of falling concrete from the bottom of the deck, or risk of inadequate girder capacity due to the deck condition (A, C, and D). Investigate what effort would be needed to clear functionally obsolete (FO) status and implement if practical. If not practical to clear within current definitions, check that the LOS on and under the facility are no worse than LOS E. If worse, determine if there are relatively inexpensive methods to increase the LOS to at least E. If not, rehabilitate as is or escalate to a more extensive rehabilitation (A and B).

- **Superstructure**

  Typical bridge rail rehabilitation work may consist of minor improvement methods that add continuity, correct minimum height, and reduce snagging. Bridge rails may need to be connected to the approach rails if they are located within the clear zone (A).

  Replace joint seals or eliminate joints completely (D and E).

  Apply corrosion inhibitor and sealer as needed, which involves a cleaning process (D and E).

  Two options may be evaluated for the asphalt overlay:

  1. Membrane in middle or (A, B, D and E)
  2. Membrane and Hot Bituminous Pavement (HBP)
     - May require patching, or
     - Class 1 removal and concrete class DT (Deck topping), or
     - Class 1 removal with corrosion inhibitor and concrete class DT (Deck topping). Spots (<10% of deck) may require fast track patching as the milling proceeds in order to maintain traffic.
     - 2d. Areas with extensive efflorescence or bottom delamination threatening falling concrete onto publically accessible spaces may require removal and replacement. This is often costly enough to push the cost and desirable criteria into the next category if extensive portion of the deck (more than a few percent of the area) exhibit such deteriorations. This rehabilitation often involves extensive traffic disruption requiring detours or a wide enough structure to stage the work without substantial traffic disruption (A, B, D and E).

- **Substructure.**

  Repair all corrosion damage on piers and abutments, removing chloride contaminated concrete, apply corrosion inhibitor, eliminate joints, or sources of water and chlorides (A, C, D and E).

Level B - Intermediate Rehabilitation

This level of rehabilitation is intended to gain an economic life of structure greater than 20 years and less than 40 years and may involve some widening to facilitate rehabilitation and provide a minimum acceptable functionality. Intermediate rehabilitation may not be economical if cost is much over $80/SF or $2/SF/ year of life. The sufficiency rating should probably be over 60 after rehabilitation, but may need to be recalculated if LOS is used to override the FO status. This level of rehabilitation is often used to

extend the economic life of a structure prior to future replacement and is suited to inclusion in pavement reconstruction projects, corridor widening, or combined in a group of structures under the same contract. Level B rehabilitation category is useful when major corridor projects may occur at an unknown time in the future and the investment in a major rehabilitation or in a new structure may be wasted due to major unknown corridor modifications, or where new structures may impede the flexibility of corridor design decisions.

Typical works for this rehabilitation category include the following:

- **Structurally deficient or functionally obsolete evaluation.**

  Clear all structurally deficient (SD) issues which shall include permanent repair. However, temporary repair is acceptable if the cause of the structural deficiency is eliminated or substantially reduced (A, C and D).

  Investigate what effort would be needed to clear functionally obsolete (FO) status and implement if practical. If not practical to clear within current definitions, check that the LOS on or under the facility is no worse than LOS E. If there are merge conditions on the, structure consider widening to achieve LOS D. If worse than LOS E, determine if there are relatively inexpensive methods to increase the LOS. If not, escalate to structure replacement or corridor widening (A and B).

  Investigate risk from substantial collision damage. Mitigate if there is a significant risk of damage likely to collapse the structure or cause enough damage to require structure replacement. Note that experience has shown that structure redundancy, or collision resistance on the order of 200 kips static load substantially reduces this risk (A and D).

  Investigate risk of failure due to flooding and mitigate as needed (A and D).

- **Superstructure.**

  Replace existing rails with crash-tested bridge rails and approach treatments within the clear zone (A).

  Eliminate joints to the extent practical (D and E).

  Apply corrosion inhibitor and sealer as needed, which involves a cleaning process (D and E).

  Deck replacement or major deck rehabilitation is probably needed for this category of rehabilitation. Widening may be needed to effectively stage the work (A, D and E).

  For areas where the deck is not delaminated or highly chloride-contaminated and reinforcing is not corroding, mill the cover, add concrete class DT overlay, waterproof membrane and asphalt. For other areas remove chloride-contaminated (concrete to below any delamination or corroding reinforcing and apply a penetrating corrosion inhibitor. If deck is readily replaceable, then replace spans with more than 20% of the deck requiring removal below the reinforcing. If the deck must be bare, use a thin polymer overlay. Note polymer overlays may be expensive and probably will require restoration every 15 or 20 years on high traffic structures (A and D).

  Add intermediate diaphragms to reduce the unsupported length in order to increase the capacity (C and D).

- **Substructure.**

Repair all corrosion damage on piers and abutments, remove chloride-contaminated concrete, apply corrosion inhibitor, eliminate joints, or sources of water and chloride (A, C, D and E).

- **Drainage.**

  Add drains and drainage system as needed (A, D and E).

Level C - Extensive Rehabilitation

This level of rehabilitation is intended to gain an economic life of greater than 40 years and usually involves widening and deck replacement. Extensive rehabilitation may not be economical if cost is much over $120/SF or $2/SF/ year of life. The sufficiency rating should over 80 after rehabilitation. This is an alternative to a new bridge.

Typical works for this rehabilitation category include the following:

- **Structurally deficient or functionally obsolete evaluation.**

  Clear all structurally deficient (SD) issues with permanent repair (A, C and D).

  Clear any functionally obsolete (FO) status, preferably by widening to current standards. If not practical to clear FO status within current definitions or provide for current standards, check that the LOS on or under the facility is no worse than LOS E for urban areas or D for rural areas. Check that the merge conditions on the structure is no worse than LOS D for urban areas and LOS C for rural areas. If worse, determine if there are relatively inexpensive methods to increase LOS. If not, escalate to structure replacement (A and B).
  Investigate risk from substantial collision damage. Mitigate if there is a significant risk of damage likely to collapse the structure or cause enough damage to require structure replacement. Note that experience has shown that structure redundancy, or collision resistance on the order of 200 kips static load substantially reduces this risk (A and D).

  Investigate risk of failure due to flooding and mitigate as needed (A and D).

- **Superstructure.**

  Replace existing rails with crash-tested bridge rails and approach treatments within the clear zone (A, D and E).

  Eliminate joints to the extent practical (D and E).

  Apply corrosion inhibitor and sealer as needed, which involves a cleaning process (D and E).

  Deck replacement and widening is probably needed for this category of rehabilitation (A, D and E).

  If the existing deck is not chloride-contaminated at the reinforcing level, mill the cover, add a concrete class DT overlay, waterproof membrane and asphalt. If the deck must be bare, use a thin bonded polymer overlay, otherwise replace if feasible (A and D).

  Add intermediate diaphragms to reduce the unsupported length in order to increase the capacity (C and D).

- **Substructure.**

  Repair all corrosion damage on piers and abutments, remove chloride-contaminated concrete, apply corrosion inhibitor, eliminate joints, or sources of water and chlorides (A, C, D and E)

- **Drainage.**

  Add drains and drainage system as needed (A, D and E).

Replacement

In general all potential rehabilitation projects should be evaluated for replacement for two reasons: In case replacement is a more economical solution than rehabilitation, and to provide a standard of cost/ year of expected life or cost/SF/year of expected life to judge the economic viability of other options against. Note that the assumption of very long life (greater than 75 years) may be flawed for most bridges that are not iconic or monumental since some form of functional obsolescence is probable for most structures or roads given enough time, and it is not practical to project into the distant future.

2.3. Load Capacity Analysis

CDOT requires bridges in Colorado to be load rated to determine their live load capacities. This project will follow closely the suggested changes to CDOT Bridge Rating Manual and Bridge Design Manual live load policy documents. The bridges will be evaluated based on the Load and Resistance Factor Rating (LRFR) method. Load Factor Rating (LFR) method will be used for the truss bridge, possibly evaluated by adjustments to roughly equivalent LRFR ratings. The rating values will meet the following criteria:

Level A – Minimum Rehabilitation

The inventory rating shall be at least 0.77 HL93 on a strength basis. The bridge shall be evaluated to carry a permit vehicle in a single lane mixed with traffic with 20% impact.

Level B – Intermediate Rehabilitation

The inventory rating shall be at least 0.85 HL93 on strength basis. The bridge shall be evaluated to carry a permit vehicle, multiple lanes, strength and modified serviceability, with 20% impact. Exterior girder may be evaluated as single trip mixed with traffic basis for those bridges with shoulders.

Level C – Extensive Rehabilitation

The inventory rating shall be at least 0.95 HL93 on strength basis. The bridge shall be evaluated to carry a permit vehicle, multiple lanes, strength and modified serviceability, with 20% impact. Exterior girder may be evaluated as single trip mixed with traffic basis for those bridges with shoulders.

2.4. Rehabilitation Criteria Evaluation and Other Considerations

Rehabilitation criteria categories may not be clear cut, but longer life increases the benefit of greater functionality. A longer life provides a greater opportunity to recover the costs of a more extensive rehabilitation with reduced maintenance and deferred replacement expenses. Skipping one of the criteria may introduce a greater risk of a structure becoming dysfunctional over time.

Justifiable costs are based on rough equity to new bridge costs in 2012 prorated over the target life. Sometimes rehabilitation is justified on the simple basis that a replacement is impractical or something

needs to be done fairly immediately at the time the evaluation for improvement is made. Rehabilitation may also be justified if some form of needed corridor change in the foreseeable future will make a new structure, or extensively rehabilitated structure obsolete before its time.

A bridge can be “poor” as indicated by the sufficiency rating of FO or SD for 10 or more years yet continue to function effectively depending on many factors. A deck with a condition rating of 4 may not present any operational problems, but indicates it is deteriorating towards condition rating 3 which will almost certainly have significant operational and maintenance problems. For example, bridge decks are usually given a condition rating of 4 and classified as structurally deficient when there is significant evidence of delamination and reinforcing corrosion. Delamination alone has several risks:

- **Potholes in the surfacing**

  Potholes in the surface can be mitigated by a relatively thick bonded concrete topping (not patching) and/or an HBP overlay which can slow the development of pop-outs in the surfacing if not placed over broken-up or loose material. Heavy traffic tends to break up additional delamination quickly, while thicker topping and lighter traffic tends to have slower deterioration. Quality of the topping bond tends to retard deterioration. One mechanism for added potholes to form is the same as on roadway pavement: freezing water tapped within the pavement. Good drainage, dense waterproof topping materials and an absence of loose or porous material under the topping will reduce freezing-induced pop-outs. Every effort should be made to not trap porous material under the topping.

- **Falling concrete**

  Falling concrete can be mitigated by some sort of catcher. Note the risk associated with falling concrete may be more perceptual than significant as the result is seldom worse that it is with other debris in the road. Falling concrete may not be as significant risk as rock fall, which is tolerated as a risk.

- **Holes entirely through the deck**

  Holes entirely through the deck have a similar risk profile and mitigations to prevent potholes as potholes in the surfacing and falling concrete combined. If the reinforcing is still intact, the issue is that repair is an emergency situation. If the reinforcing is not intact the consequences to a vehicle can be more significant.

There are other risks that should be considered for rehabilitations with a significant expected life. Some of these risks may not be a priority due to lack of a prior problem with the particular structure and with similar structures. This may be sufficient to indicate the risk is somewhat low over the time periods the structure has been in service. These risks include the following:

- **Scour**

  Scour is major cause of bridge collapse. It is possible to improve scour conditions by maintenance and appropriate countermeasures. It is sometimes possible to change foundation types, but this is expensive and most appropriate in known problem spots. For a structure with less than the life of a new structure some risk in the superflood may be acceptable. Eliminating joints often reduces collapse risk by bracing supports against sidesway and preventing superstructure elements from floating off or falling off substructure.

- **Collision**

Collision by trucks and trains is a significant cause of structure collapse. Risk tends to decrease with increasing clear zone and with increasing member strength. Many structures have sufficient redundancy to resist collapse with a member failure.

- **Earthquake**

  Earthquakes are not generally a problem in Colorado, but all structures should have the superstructure effectively connected to the substructure, or sufficiently lap over the seat. Rockers under simple span ends are a high risk element (also for scour and collision), unless motions are effectively limited.

- **Overloading**

  Generally, HL93 strength operating capacity evaluated with realistic ADTT and other adjustment factors will provide a low risk of loading beyond design limits. In Colorado the permit vehicle also provides a check against an errant legal permitted vehicle causing damage.

- **Brittle Fracture**

  Many structures have a risk of brittle fracture, especially those with older steel. Built-up riveted structures normally have cracks stop at rivet holes, limiting strength loss. Wide-flange rolled structures are susceptible to brittle fracture, if they are from the pre-Charpy testing era and should be checked for sufficient redundancy (four or more parallel members if simple span). Concrete pier caps may be a problem, but if integral with two or more columns supporting a superstructure with redundancy, there is probably not a brittle collapse issue. If seemingly subject to brittle fracture, structures can be checked with plastic analysis (probably assuming one lane of HL93 or a permit vehicle and a load factor of 1.1 for DL and LL) with a member failed to a pinned condition at the assumed brittle fracture location.

CHAPTER 3

Northern Avenue over I-25 Bridge

(L-18-AQ)

3.1. Existing Bridge Condition

3.1.1. Description of Structure

The 289.75-ft long bridge, built in 1957, consists of five spans, non-composite, wide flange steel girders, carrying one lane in each direction. The bridge spans over I-25 southbound/northbound traffic and the BNFS railroad lines. The bridge is comprised of three units. Unit 1 is a 36'-6" single span. Unit 2 is also a two-span unit with span lengths of 73'-6" and 76'-6". Unit 3 consists of two spans with span lengths of 47'-7" and 55'-8". The span lengths are measured between the centerline of bearings. The cross section of the bridge is symmetrical with curb-to-curb width of 44-ft providing one traffic lane in each direction and 6-ft raised pedestrian sidewalks with rails. The deck consists of cast-in-place concrete with an asphalt overlay.

Photo 3-1: Elevation View (Looking Southwest)

The spans are comprised of seven non-composite steel rolled wide flange girders spaced at 7'-9". Unit 1 consists of WF30x124 rolled girders. Units 2 and 3 consist of 36WF245 and 36WF150 rolled girders. Inverted "K" Intermediate and end cross frames consisting of channel and angle members are located in all the Bays. The spacing of the cross frames varies from 13'-8 3/8" to 19'-2". Rocker bearings are present at the end of the girder units, except Unit 1, Pier 2. The end of the girders between Units 1 and 2 are connected by back-to-back angle connections. The minimum vertical clearance is approximately 20-ft.

The reinforced concrete piers are composed of three rectangular columns supported on individual spread footings. Abutment 1 is a stub abutment with existing ground sloped forward. Abutment 6 is an open abutment with four rectangular columns supported on individual spread footings with masonry stone backwall.

There is a 12-in water main attached to the cross frames in the Bay between girders F and G along the length of the bridge.

The annual average daily traffic (AADT) was 11,500 vehicles, with 7% truck traffic, in 2006 and is projected to be 11,700 vehicles in 2026. The roadway functional classification is a rural minor arterial system.

The label and numbering of the piers are based on the CDOT bridge inspection substructure numbering which goes from west to east starting at the abutment or first substructure unit. The numbering of the piers in the original plans goes from east to west starting with Abutment 1, Pier 1, Pier, 2, Pier 3, Pier 4, etc.

General Layout, Framing Plan, and Typical Section drawings of the existing bridge are located in section 3.4.

3.1.2. Sufficiency, Condition, and Appraisal Rating Summary

The bridge is classified as structurally deficient and has a sufficiency rating of 39.0 based on the latest bridge inspection report. The bridge is classified as structurally deficient (see Table 3-1).

Bridge Name	Bridge Designation	Sufficiency Rating	Structurally Deficient?	Functionally Obsolete?	Deck (Item 58)	Superstructures (Item 59)	Substructures (Item 60)	Structural Condition (Item 67)	Deck Geometry (Item 68)	Underclearances (Item 69)	Waterway Adequacy (Item 71)	Approach Roadway Alignment (Item 72)
Northern Ave. over I-25	L-18-AQ	39.0	YES		6	6	4	4	2	4	N	8

Structurally Deficient
1. A condition rating of 4 or less for
Item 58 - Deck or
Item 59 - Superstructures or
Item 60 - Substructures or
Item 62 - Culvert and Retaining Walls or
2. An appraisal of 2 or less for
Item 67 - Structural Condition or
Item 71 - Waterway Adequacy

Functionally Obsolete
1. An appraisal rating of 3 or less for
Item 68 - Deck Geometry or
Item 69 - Underclearances or
Item 72 - Approach Roadway Alignment or
2. An appraisal of 3 or less for
Item 67 - Structural Condition or
Item 71 - Waterway Adequacy

Any bridge classified as structurally deficient is excluded from the functionally obsolete category.

Table 3-1 Sufficiency, Condition, and Appraisal Rating Summary

The comprehensive evaluation of the condition ratings for the Deck (Item 58), Superstructure (Item 59), and Substructure (Item 60) dating back to the 1970s revealed that the deterioration rate of the bridge has been steady. The current deficiencies have been present as far as 20 years ago. A detailed matrix of the deterioration rate can be found in Appendix B.

3.1.3. Load Capacity Analysis

According to the 2010 bridge inspection report, the operating and inventory ratings using load factor method were 41.0 and 24.0, respectively.

Load rating analysis using the Load and Resistance Factor Rating (LRFR) method was performed on the structure to determine the load-carrying capacity of the bridge and the results are summarized below.

	Existing Bridge Condition		
Inventory	Ext. Girder Rating	Controlling Limit State	Location Span - (%)
	1.04	**Service II**	**1 - (50)**
	Int. Girder Rating	Controlling Limit State	Location Span - (%)
	1.08	**Service II**	**1 - (50)**
Operating	Ext. Girder Rating	Controlling Limit State	Location Span - (%)
	1.36	**Service II**	**1 - (50)**
	Int. Girder Rating	Controlling Limit State	Location Span - (%)
	1.40	**Service II**	**1 - (50)**
Permit	Ext. Girder Rating	Controlling Limit State	Location Span - (%)
	1.76	**Strength II**	**1 - (40)**
	Int. Girder Rating	Controlling Limit State	Location Span - (%)
	1.85	**Strength II**	**1 - (40)**

Table 3-2 Existing Condition Load and Resistance Factor Rating Summary

3.2. Structural Assessment Findings

A visual assessment of the bridge showed typical corrosion damage of the cross frame members and steel rolled girders over the piers associated with the deficiencies in the deck. The deck underside had spalls and delaminated area with exposed and corroded reinforcing bars.

Joints at Abutments 1 and 6, Piers 2 and 4 are unsealed and are the probable cause of much of the deterioration of the deck bottom, girders, cross frame members, pier cap, and columns.

Damage to the bridge rails was associated with vehicular impact and snagging on the pickets and posts causing damage to the concrete sidewalk slab. The bridge rail, approximately 17-ft from the through lane, may be outside the clear zone for the speed and volume of traffic

The underside of the deck had spalls and delaminated areas with exposed and corroded reinforcing bars. The concrete deck slab damage is mostly at the deck joints. Superficial transverse cracks were visible in a few locations. Based on the previous inspection reports, the deck bottom deterioration has been present for at least a decade with very little change over time. The bottom of deck appeared sound with some scaling and efflorescence. The top of the deck has little distress with the exception of one pot-hole.

The deterioration of the steel girders and cross frames is related to the leaking deck joints at Piers 2 and 4.

The pier caps exhibited concrete section loss exposing the longitudinal reinforcing bars and stirrups. The connection angle between the ends of the girders at Pier 2 exhibited signs of deformation, rust and cracks. Delamination and concrete spalls due to the deficiency in the concrete deck were visible on the Piers 2 and 4 columns. The low condition rating for substructure is caused by the deteriorated condition of the unsealed expansion joints at Piers 2 and 4. Pier 2 has been patched twice in the past; however, the

open joint in the deck remains unsealed. The pier caps exhibited concrete section loss exposing the longitudinal reinforcing bars and stirrups. Northeast retaining wall had noticeable crack and deflected outward.

3.2.1 Superstructure

Deck

The underside of the deck slab was inspected near Pier 2, Pier 3 and Pier 4 during the bucket truck inspection. The deficiencies were found with few cracks, delaminations and spalls (some with exposed reinforcement) at the overhang underside of the deck slab on the South side of Pier 4 as shown in photo D-1, the North side of Pier 3 at photo D-2 and on the South side of Pier 2 in photo D-3. A few locations at the concrete buildup over the steel cross frame above the pier cap were found with some delaminations and spalls as shown in photos D-4, D-5 and D-6. There were a few transverse and longitudinal cracks throughout the underside of the deck slab as seen in photos D-7 and D-8. Spalls with exposed reinforcement were at the underside of the deck slab in Span 5 as shown in photo D-9.

Photo D-1: Spalls (1in x 6in x 2.5ft) at underside deck overhang at South side - Pier 4.

Photo D-2: Delamination at underside deck overhang at North side – Pier 3.

Photo D-3: Delamination at underside deck overhang at North side – Pier 3.

Photo D-4: Spalls (1-inx6-inx6-in) with exposed reinforcement at underside deck slab, South side – Pier 2.

Photo D-5: Girder 3G at Bay 3F - Pier 4.

Photo D-6: Girder 3D at Bay 3C – Pier 4.

Photo D-7: Delamination and spalls of deck underside at top flange of girder 2G – Pier 2.

Photo D-8: Transverse and longitudinal cracks at deck underside near Pier 3.

Photo D-9: Transverse and longitudinal cracks at deck underside at Span 4 near Pier 4.

Photo D-10: Spalls with exposed reinforcement at deck underside in Span 5.

Bridge Rail

Railings on both side of bridge appeared to be in good condition. There were some minor corrosion at both top and bottom railings, picket rails and base plates as seen in photo R1-2.

Photo R-1: Bridge rail – South looking North.

Photo R-2: Begin bridge rail at North East.

Photo R-3: South West railing at approach span.

Photo R-4: South East railing at approach span.

Photo R-5: South West railing.

Photo R-6: Bridge rail at right.

Curb/Sidewalk

The curb and sidewalk is in fairly good condition with some superficial cracks.

Photo CS-1: Curb/Sidewalk – East looking West.

Photo CS-2: Curb/Sidewalk at North East.

Girders

All girder ends and connections over Piers 2, 3 and 4 appeared to be in good shape with no signs of section loss. There were a few locations with some corrosion occurred at top and bottom flanges as shown in photos S-1 and S-2 below, also several spots throughout the girders where paint was worn to primer.

Photo S-1: Girder 2A at Pier 2.

Photo S-2: Girder 3F in Bay 3F - Pier 4.

Cross Frame (At Piers 2, 3 and 4)
The steel cross frame between girders at Piers 2, 3 and 4 were inspected during the bucket truck inspection. Most of the cross frame were found with corrosion at both top and bottom flange as seen in some of the photos below C4-1, C4-2 and C4-3.

Photo C4-1: Girder 3G (R) at Bay 3F - Pier 4.

Photo C4-2: Girder 3D (R) at Bay 3C – Pier 4.

Photo C4-3: Girder 3F (L) in Bay 3F - Pier 4.

Photo C4-4: Typical connection between Girders at Pier 2

Expansion Joints

The expansion joint along the deck width at Pier 4 had some small cracks and potholes that can be seen in photos E1-1 and E1-2. It appeared that the expansion joint at abutment 6 were repaired before but the current condition still had some cracks and potholes as shown in photo E1-3.

Photo E1-1: Crack and pothole along the expansion joint at Pier 4 – South looking North.

Photo E1-2 : Crack and pot hole along the expansion joint at Pier 4 – North looking South.

Photo E1-3: Previous repair with crack along the expansion joint at Abutment 6.

*

Photo E1-4: Transverse crack at joint over Abutment 6.

Photo E1-5: Transverse crack at joint over Pier 5.

3.2.2. Substructure

Bearings

All of the bearings at Piers 2 and 3 were in a good condition with no signs of section loss as shown in photos B2-1, B3-1 and B4-1. Bearings located in areas with significant spalls may have an effect on the function and stability due to partially lost of the concrete at top cap as shown in photos B2-2 and B4-2. All the rocker bearings at Span 4 over Pier 4 were tipped to the West and were staying at this position up to the time of inspection as shown at photos B4-3, B4-4. The bearing plate connection at Pier 4 under girder 3C, nut was not tighten down to the bearing plate (See photo B4-5).

Photo B2-1: Bearing at girder 2A over Pier 2.

Photo B3-1: Bearing at girder 3G over Pier 3.

Photo B4-1: Bearings at girder 3F (L) and girder 4F (R) that was tipped about 10 degrees – Pier 4.

Photo B2-2: Bearing at girder 2G (L) over Pier 2.

Photo B4-2: Large delamination at South face, top end cap – Pier 4.

Photo B4-3: Bearings at girder 3G (L) and girder 4G (R) that was tipped about 10 degrees – Pier 4.

Photo B4-4: Bearings at girder 3E (L) and girder 4E (R) that was tipped about 10 degrees – Pier 4.

Photo B4-5: Bearing plate connection at girder 3C (R), Loose anchor bolt nut – Pier 4.

Photo B4-6: Bearing at girder A over Abutment 6.

Photo B4-7: Bearings at Abutment 6.

Piers

Pier 2 – Cap

The concrete pier cap was inspected starting from the North to the South of Pier 2 and the visual inspection was found with a few deficiencies that could affect to the strength and/or serviceability of either the pier element or to the bridge. These deficiencies were found along the top and both faces of pier cap. Typical delaminations were found at the East face of the pier cap in between Bay 2A and 2F (See photo P2-1, P2-2 and P2-3) and other location as at the South face of the pier cap. A large spalls with corroded reinforcement and broken stirrup were found at the top pier cap in Bay 2F (See photo P2-4 and P2-5), also there was a large spalls at the West face cantilever of the pier cap that had some exposed reinforcement as shown in photo P2-6. The deterioration of the reinforcement at pier cap with some section loss that was arrange from 10% to 25%.

Photo P2-1: Delamination at East face of pier cap in Bay 2A, approximated 4ft in length.

Photo P2-2: Delamination at top pier cap near girder 2A, approximated 4ft in length.

Photo P2-3: Delamination / spalls at top and East face of pier cap in Bay 2F.

Photo P2-4: Large spalls (3in x 2.5ft x 8ft) with exposed reinforcement and broken stirrup at top pier cap in Bay 2F above column C.

Photo P2-5: Broken stirrup at top pier cap in Bay 2F above column C.

Photo P2-6: Delamination at South face of end cap (2.5ft in length) / spalls (2in x 3ft x 3ft) with exposed reinforcement at West face.

Pier 3 – Cap

The concrete pier cap was inspected from South to North and it appeared to be in a good condition with no major deficiency found. There were a few small spalls occurred at top pier cap due to weathering (See photo P3-1).

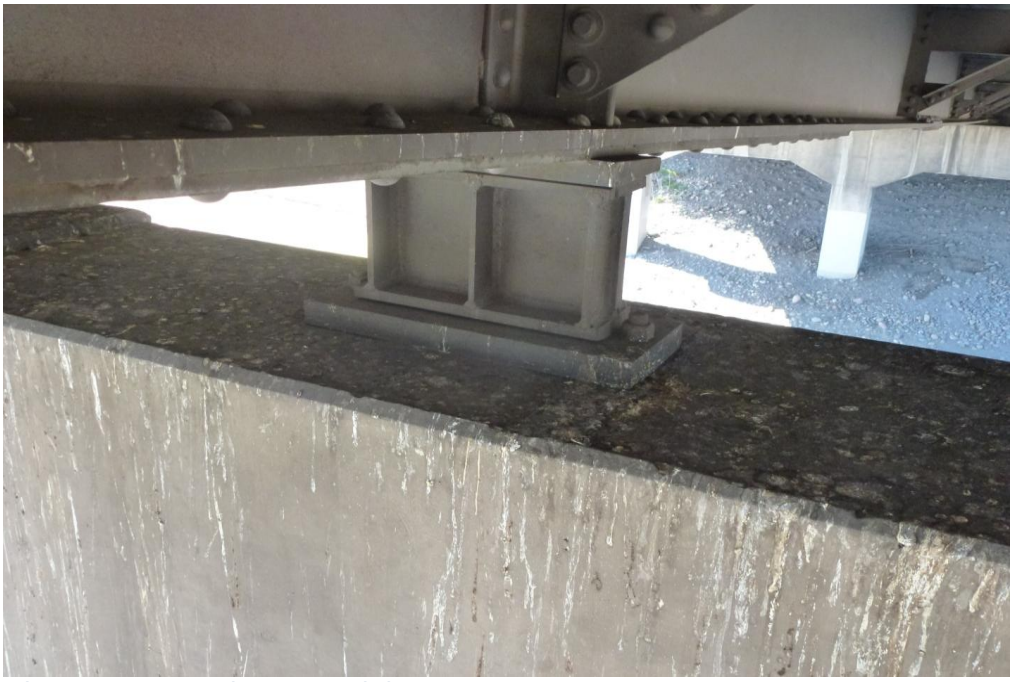

Photo P3-1: Top pier cap at girder 3C.

Pier 4 - Cap

The concrete pier cap was inspected starting from the South to the North of Pier 4 (See photo P4-1). The inspection of Pier 4 was found with a few deficiencies that could be a concern since they may have some impact on the strength and/or serviceability of either the pier element or to the bridge. Some areas at top of pier cap were severely damage due to spalls, delamination and deterioration of reinforcement. From top end cap to the South and the North face of pier cap, there was a large delamination with seem to be corroded reinforcement (See Photo P4-2, P4-3 and P4-4). There were also few others delamination occurred along the West face of pier cap (See Photo P4-5) as well as at the top pier cap in some places (See Photo P4-6). Large spalls with exposed reinforcement was also found above the column B (See Photo P4-7).

There were a few delamination and spalls located along the East face of Pier 4 where the photos were taken from the abutment 6 (See photo P4-8 and P4-9).

Photo P4-1: West elevation at Pier 4 – South looking North.

Photo P4-2: Large delamination at South face, top end cap.

Photo P4-3: Large delamination at South face, top end cap.

Photo P4-4: Delamination / vertical crack 3ft at West face of end cap.

Photo P4-5: Spalls / Delamination at West face along pier cap, approximated 47ft.

Photo P4-6: Delamination at top cap above column C.

Photo P4-7: Delamination / spalls with exposed reinforcement (2in x 4ft x 6ft) at West face pier cap above Column B.

Photo P4-8: East elevation at Pier 4 – East looking West.

Photo P4-9: Delamination / spalls (2in x 6in x 8ft) at East face, cantilever end cap at column C – Pier 4.

Abutments

Abutments appeared to be in good condition with no signs of cracks or extensive damage.

Photo AB-1: Abutment 6.

Retaining Walls

Northeast retaining wall appeared to be deflected. A noticeable vertical crack with concrete loss was also visible.

W-1: Northwest retaining wall

W-2: Northwest retaining wall

W-3: Northwest retaining wall

W-4: Northwest retaining wall sidewalk

3.3. Rehabilitation Alternatives

3.3.1. Rehabilitation Alternatives

Level A - Minimal Rehabilitation

Structurally Deficient or Functionally Obsolete Evaluation

- Accept inadequate width of the bridge based on the low current and future traffic volume.

Superstructure

- Pier 2 will need to be encapsulated and made integral in order to eliminate the fatigue prone connection angles between the girder ends.
- Use penetrating corrosion inhibitor top and bottom of the deck.
- Apply concrete sealer on curb and sidewalk.
- Patch top of the concrete deck and provide waterproofing membrane and Hot Bituminous Pavement (HBP).
- Install new joint at Piers 2 and 4. Plug joint at abutments.
- Provide 8-in drain pipes on each side uphill from Abutments 1 and 6 joints and Pier 2 and 4 joints
- It is uncertain if the concrete deck will have another 30 year of service life. A stainless steel mesh attached between girders over the traffic lanes is a feasible option to catch any falling concrete.
- W-beam attached to rail (optional Thrie-beam, topcoat aluminium paint on existing rail). Note rail is probably not outside the clear zone unless the structure is converted to two lanes. Snagging can be corrected with a W or Thrie-beam in the inside face, and edge punching by an angle between the deck and baseplate at the back (one leg horizontal under posts, one vertical at back of post).
- Optional wash and topcoat exterior girders on Span 1.
- Paint the damaged portion of the diaphragms and bearings at abutments and Piers 2 and 4.

Substructure

- Piers 2 and 4:
    - Remove all loose and delaminated concrete from the caps and columns.
    - Treat the pier caps and columns with corrosion inhibitor and concrete sealer.
    - Replacement broken or damaged reinforcement.
    - Wrap the pier cap or columns with FRP.
    - Patch other minor spalls.
- Abutments 1 and 6:
    - Remove all the delaminated concrete.
    - Treat the abutment cap and columns with corrosion inhibitor and wrap the repaired portion with FRP at Abutment 6.

Level B - Intermediate Rehabilitation

Structurally Deficient or Functionally Obsolete Evaluation

- Determine the actual Level of Service would be or reduce the travel lanes to two lanes with shoulders.

Superstructure

- Same as Level A, except mill top of deck, up to 20% Class 2 and 3 removal, before applying the corrosion inhibitor. Add 2-in of Concrete Class DT (Deck Topping) with stainless mesh before placing the waterproof membrane and the HBP.
- Treat the curb and sidewalk with corrosion inhibitor.
- Reset rail with W or Thrie-beam rail. Add an angle under posts to spread punching load.
- Thirty year life of deck is probable with the 2-in Concrete Class DT (Deck Topping). A stainless steel mesh attached between girders over the traffic lanes is a feasible option to catch any falling concrete.
- Consider topcoat paint on remainder of exterior girders and integral treatment of Pier 2 upper diaphragm west side.

Substructure

- Pier 2 will need to be encapsulated and made integral in order to eliminate the fatigue prone connection angles between the girder ends.
- Piers 2 and 4:
    - Remove all loose and delaminated concrete from the cap and columns.
    - Treat the pier caps and columns with corrosion inhibitor and concrete sealer.
    - Replacement broken or damaged reinforcement.
    - Wrap the pier cap or columns with FRP.
    - Patch other minor spalls.
- Abutments 1 and 6:
    - Remove all the delaminated concrete.
    - Treat the abutment cap and columns with corrosion inhibitor and wrap the repaired portion with FRP at Abutment 6.

Level C - Extensive Rehabilitation

Structurally Deficient or Functionally Obsolete Evaluation

- Determine the actual Level of Service would be or reduce the travel lanes to two lanes with shoulders.

Superstructure

- Remove and replace the concrete deck.
- Add shear connectors to provide composite action between the girders and the concrete deck, waterproof membrane and HBP.
- 8-in drain pipes with box uphill from joints at Abutments 1 and 6 and Piers 2 and 4.
- Provide new bridge rails and short approach slabs at Abutment 6 to move leakage away from abutment.
- Consider joint elimination at Pier 2, add bearing pad at Abutment 1,
- Consider wash and topcoat paint on all girders and diaphragms and integral treatment of Pier 2 upper diaphragm.

Substructure

- Pier 2 will need to be encapsulated and made integral in order to eliminate the fatigue prone connection angles between the girder ends.
- Piers 2 and 4:
    - Remove all loose and delaminated concrete from the cap and columns.
    - Treat the pier caps and columns with corrosion inhibitor and concrete sealer.

    - Replacement broken or damaged reinforcement.
    - Wrap the pier cap or columns with FRP.
    - Patch other minor spalls.
- Abutments 1 and 6:
    - Remove all the delaminated concrete.
    - Treat the abutment cap and columns with corrosion inhibitor and wrap the repaired portion with FRP at Abutment 6.

Level D - Extensive Rehabilitation

Structurally Deficient or Functionally Obsolete Evaluation

- The widening of the bridge with single 8-ft sidewalk will clear the geometry deficiency with the extension of the existing substructure and adding new girder lines. However, Right-of-Way cost will be an issue.

Superstructure

- Same as Rehabilitation Level C.

Substructure

- Same as Rehabilitation Level C.

3.3.2. Load Capacity Analysis of Rehabilitation Alternatives

Load capacity analyses using LRFR method were evaluated for each of the rehabilitation alternatives with the following consideration:

Level A – Minimum Rehabilitation
The inventory rating shall be at least 0.77 HL93 on a strength basis. The permit vehicle shall be evaluated to carry a single lane mixed with traffic with 20% impact.

Level B – Intermediate Rehabilitation
The inventory rating shall be at least 0.85 HL93 on strength basis. The permit vehicle shall be evaluated to carry a single lane mixed with traffic with 20% impact. Exterior girder may be evaluated as single trip mixed with traffic basis for those bridges with shoulders.

Levels C and D – Extensive Rehabilitation
The inventory rating shall be at least 0.95 HL93 on strength basis. The permit vehicle shall be evaluated to carry a single lane mixed with traffic with 20% impact. Exterior girder may be evaluated as single trip mixed with traffic basis for those bridges with shoulders.

Below table is a summary of the rating values for each alternative:

	Level A Rehabilitation		
Inventory	Ext. Girder Rating	Controlling Limit State	Location Span - (%)
	1.04	**Service II**	**1 - (50)**
	Int. Girder Rating	Controlling Limit State	Location Span - (%)
	1.08	**Service II**	**1 - (50)**
Operating	Ext. Girder Rating	Controlling Limit State	Location Span - (%)
	1.36	**Service II**	**1 - (50)**
	Int. Girder Rating	Controlling Limit State	Location Span - (%)
	1.40	**Service II**	**1 - (50)**
Permit	Ext. Girder Rating	Controlling Limit State	Location Span - (%)
	1.76	**Strength II**	**1 - (40)**
	Int. Girder Rating	Controlling Limit State	Location Span - (%)
	1.85	**Strength II**	**1 - (40)**
	Level B Rehabilitation		
Inventory	Ext. Girder Rating	Controlling Limit State	Location Span - (%)
	1.00	**Service II**	**1 - (50)**
	Int. Girder Rating	Controlling Limit State	Location Span - (%)
	1.02	**Service II**	**1 - (50)**
Operating	Ext. Girder Rating	Controlling Limit State	Location Span - (%)
	1.29	**Service II**	**1 - (50)**
	Int. Girder Rating	Controlling Limit State	Location Span - (%)
	1.33	**Service II**	**1 - (50)**
Permit	Ext. Girder Rating	Controlling Limit State	Location Span - (%)
	1.64	**Strength II**	**1 - (100)**
	Int. Girder Rating	Controlling Limit State	Location Span - (%)
	1.77	**Strength II**	**1 - (40)**

	Level C Rehabilitation		
Inventory	Ext. Girder Rating	Controlling Limit State	Location Span - (%)
	1.01	**Strength I**	**1 - (100)**
	Int. Girder Rating	Controlling Limit State	Location Span - (%)
	1.23	**Strength I**	**1 - (100)**
Operating	Ext. Girder Rating	Controlling Limit State	Location Span - (%)
	1.32	**Strength I**	**1 - (100)**
	Int. Girder Rating	Controlling Limit State	Location Span - (%)
	1.59	**Strength I**	**1 - (100)**
Permit	Ext. Girder Rating	Controlling Limit State	Location Span - (%)
	1.60	**Strength II**	**1 - (100)**
	Int. Girder Rating	Controlling Limit State	Location Span - (%)
	2.05	**Strength II**	**1 - (100)**
	Level D Rehabilitation		
Inventory	Ext. Girder Rating	Controlling Limit State	Location Span - (%)
	1.15	**Strength I**	**1 - (100)**
	Int. Girder Rating	Controlling Limit State	Location Span - (%)
	1.08	**Strength I**	**1 - (100)**
Operating	Ext. Girder Rating	Controlling Limit State	Location Span - (%)
	1.50	**Strength I**	**1 - (100)**
	Int. Girder Rating	Controlling Limit State	Location Span - (%)
	1.39	**Strength I**	**1 - (100)**
Permit	Ext. Girder Rating	Controlling Limit State	Location Span - (%)
	1.40	**Strength II**	**1 - (100)**
	Int. Girder Rating	Controlling Limit State	Location Span - (%)
	1.23	**Strength II**	**1 - (100)**

The inventory ratings above passed the LRFR rating criteria specified for this project because Service II is the controlling limit state. The rating values for the Strength I limit states are higher for these type of wide flange rolled compact steel sections.

3.3.3. Quantities/Cost Estimates

The probable construction costs associated with each rehabilitation alternative and replacement were evaluated. The cost/SF/yr is based on the life expectancy of the level of rehabilitation. The life expectancy for Rehabilitation Levels A, B, C, and replacement options are 20, 30, 50, and 75 years, respectively. Below is a summary of the estimated costs for each alternative.

Level A Rehabilitation			***Level B Rehabilitation***		
Cost	Cost/SF	Cost/SF/yr	Cost	Cost/SF	Cost/SF/yr
$512,584	**$30.72**	**$1.54**	**$1,038,884**	**$62.25**	**$2.08**

Level C Rehabilitation			***Level D Rehabilitation***		
Cost	Cost/SF	Cost/SF/yr	Cost	Cost/SF	Cost/SF/yr
$1,500,543	**$89.92**	**$1.80**	**$2,251,340**	**$94.44**	**$1.89**

Replacement		
Cost	Cost/SF	Cost/SF/yr
$3,421,180	**$122.18**	**$1.63**

A summary of the quantities used to determine the probable construction cost for each alternative are located in the Appendix C.

3.3.4. Rehabilitation Alternative Evaluation

Long-Term Evaluation

There is a possibility that the I-25 SB alignment may move east of the BNFS railroad lines which will have an impact on the existing bridge. The crest of the vertical curve is located over the railroad about 20-ft east of the mainline track (crest at station 4+10). The mainline does not seem to be 25-ft clear from the piers. The portion of the structure west of the railroad would still be needed to bring the level of Northern Avenue Bridge down to the level of the adjacent streets on the west. However, the grade is relatively steep by current practice (8%) and the sidewalk will not meet ADA without adjustment to the grade. The portion of the structure east of the railroad could be extended with another unit at a grade appropriate to cross over the new I-25, with adjustments in the haunch as needed. About 90-ft of the deck on the west end of the current Northern Avenue over I-25 Bridge would need to be replaced for the grade change with a new pier immediately adjacent to the current pier at the east abutment.

Potential Risk and Other Factors

Rehabilitation criteria categories may not be clear cut, but longer life increases the benefit of greater functionality. A longer life provides a greater opportunity to recover the costs of a more extensive rehabilitation with reduced maintenance and deferred replacement expenses. Skipping one of the criteria may introduce a greater risk of a structure becoming dysfunctional over time.

Justifiable costs are based on rough equity to new bridge costs in 2012 prorated over the target life. Sometimes rehabilitation is justified on the simple basis that a replacement is impractical or something needs to be done fairly immediately at the time the evaluation for improvement is made. Rehabilitation may also be justified if some form of needed corridor change in the foreseeable future will make a new structure, or extensively rehabilitated structure obsolete before its time.

A bridge can be “poor” as indicated by the sufficiency rating of FO or SD for 10 or more years yet continue to function effectively depending on many factors. A deck with a condition rating of 4 may not present any operational problems, but indicates it is deteriorating towards condition rating 3 which will almost certainly have significant operational and maintenance problems. For example, bridge decks are usually given a condition rating of 4 and classified as structurally deficient when there is significant evidence of delamination and reinforcing corrosion. Delamination alone has several risks:

- **Potholes in the surfacing**

  Potholes in the surface can be mitigated by a relatively thick bonded concrete topping (not patching) and/or an HBP overlay which can slow the development of pop-outs in the surfacing if not placed over broken-up or loose material. Heavy traffic tends to break up additional delamination quickly, while thicker topping and lighter traffic tends to have slower deterioration. Quality of the topping bond tends to retard deterioration. One mechanism for added potholes to form is the same as on roadway pavement: freezing water tapped within the pavement. Good drainage, dense waterproof topping materials and an absence of loose or porous material under the topping will reduce freezing-induced pop-outs. Every effort should be made to not trap porous material under the topping.

- **Falling concrete**

  Falling concrete can be mitigated by some sort of catcher. Note the risk associated with falling concrete may be more perceptual than significant as the result is seldom worse that it is with other debris in the road. Falling concrete may not be as significant risk as rock fall, which is tolerated as a risk.

- **Holes entirely through the deck**

  Holes entirely through the deck have a similar risk profile and mitigations to prevent potholes as potholes in the surfacing and falling concrete combined. If the reinforcing is still intact, the issue is that repair is an emergency situation. If the reinforcing is not intact the consequences to a vehicle can be more significant.

There are other risks that should be considered for rehabilitations with a significant expected life. Some of these risks may not be a priority due to lack of a prior problem with the particular structure and with similar structures. This may be sufficient to indicate the risk is somewhat low over the time periods the structure has been in service. These risks include the following:

- **Collision**

  Collision by trucks and trains is a significant cause of structure collapse. Risk tends to decrease with increasing clear zone and with increasing member strength. Many structures have sufficient redundancy to resist collapse with a member failure.

- **Earthquake**

  Earthquakes are not generally a problem in Colorado, but all structures should have the superstructure effectively connected to the substructure, or sufficiently lap over the seat. Rockers under simple span ends are a high risk element (also for scour and collision), unless motions are effectively limited.

- **Overloading**

Generally, HL93 strength operating capacity evaluated with realistic ADTT and other adjustment factors will provide a low risk of loading beyond design limits. In Colorado the permit vehicle also provides a check against an errant legal permitted vehicle causing damage.

- **Brittle Fracture**

  Many structures have a risk of brittle fracture, especially those with older steel. Built-up riveted structures normally have cracks stop at rivet holes, limiting strength loss. Wide-flange rolled structures are susceptible to brittle fracture, if they are from the pre-Charpy testing era and should be checked for sufficient redundancy (four or more parallel members if simple span). Concrete pier caps may be a problem, but if integral with two or more columns supporting a superstructure with redundancy, there is probably not a brittle collapse issue. If seemingly subject to brittle fracture, structures can be checked with plastic analysis (probably assuming one lane of HL93 or a permit vehicle and a load factor of 1.1 for DL and LL) with a member failed to a pinned condition at the assumed brittle fracture location.

3.3.5. Recommendations

Given the information presented in this chapter, it is recommended that this bridge follow Level B rehabilitation option which consists of intermediate rehabilitation to the superstructure and substructure components. The cost estimates and load capacity meet the Level B rehabilitation criteria established in this report. The functional obsolete (FO) classification can be corrected by re-striping for two lanes with shoulders.

3.4. Conceptual Plans

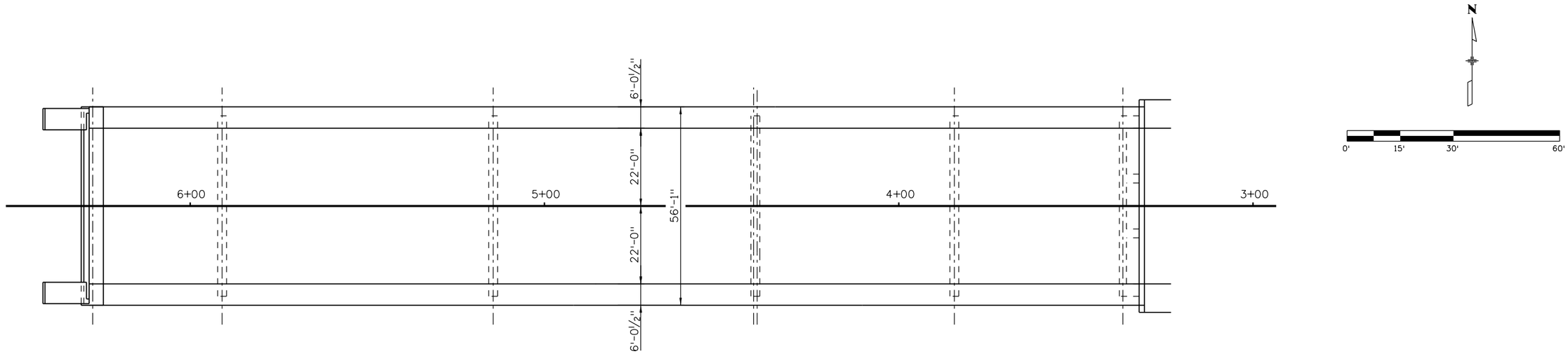

PLAN

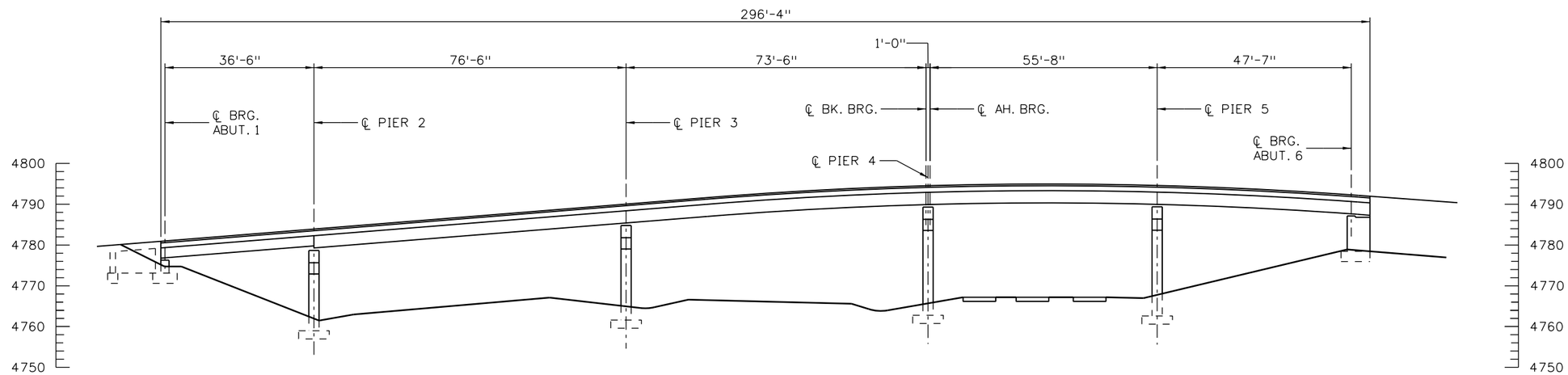

ELEVATION

Print Date: 12/17/2012	Sheet Revisions	Colorado Department of Transportation	As Constructed
File Name: 19301BRDG_Northern_GenLayout01.dgn	Date: / Comments / Init.	902 Erie Avenue, Pueblo, CO 81001	No Revisions:
Horiz. Scale: 1:30 Vert. Scale:		Phone: 719-546-5438 FAX: 719-546-5702	Revised:
ATKINS 4601 DTC Boulevard, Suite 700, Denver, CO 80237, Phone: (303) 221-7275 Fax: (303) 221-7276		Region 2	Void:

NORTHERN AVENUE OVER I-25
GENERAL LAYOUT

Designer:	Structure Numbers	L-18-AQ	Project No./Code
Detailer:			
Sheet Subset:	Subset Sheets: of		Sheet Number 1

22463 11:07:05 AM \\DENFS06\Trans\Tranproj\100031632 - R2 Rehab\19301\Consultants\Bridge\Drawings\19301BRDG_Northern_GenLayout01.dgn

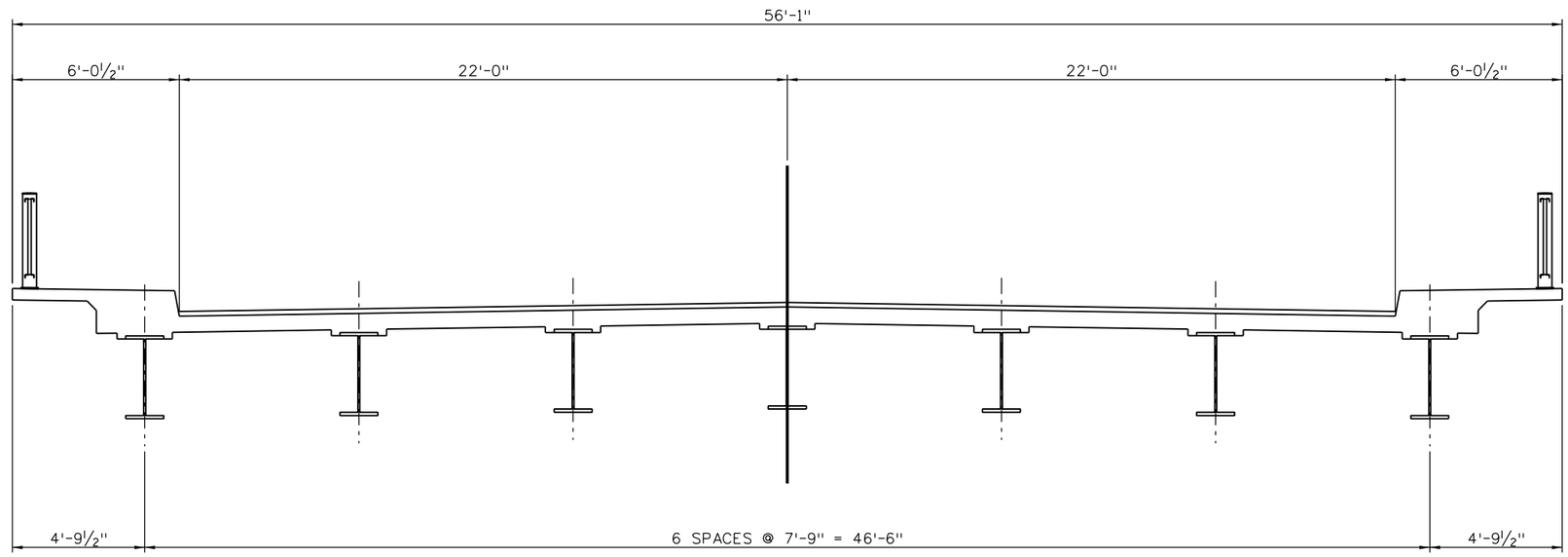

TYPICAL SECTION

Print Date: 12/17/2012	Sheet Revisions	Colorado Department of Transportation	As Constructed
File Name: 19301BRDG_Northern_TypSec01.dgn	Date: / Comments / Init.	902 Erie Avenue, Pueblo, CO 81001	No Revisions:
Horiz. Scale: 1:5.33333 Vert. Scale:		Phone: 719-546-5438 FAX: 719-546-5702	Revised:
ATKINS 4601 DTC Boulevard, Suite 700, Denver, CO 80237, Phone: (303) 221-7275 Fax: (303) 221-7276		Region 2	Void:

NORTHERN AVENUE OVER I-25
TYPICAL SECTION

Designer:
Detailer:
Sheet Subset:
Structure Numbers: L-18-AQ
Subset Sheets: of

Project No./Code

Sheet Number 2

22463 11:07:08 AM \\DENFS06\Trans\Tranproj\100031632 - R2 Rehab\19301\Consultants\Bridge\Drawings\19301BRDG_Northern_TypSec01.dgn

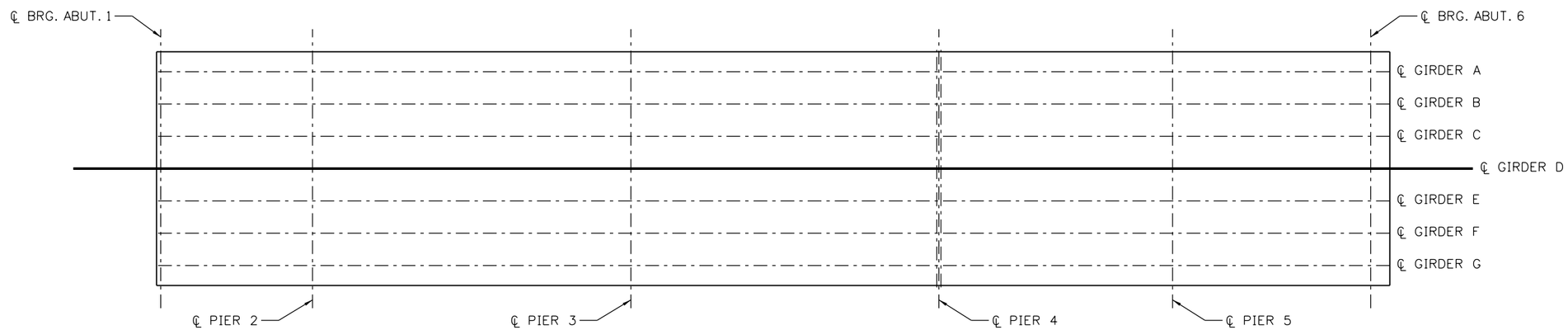

PLAN

Print Date: 12/17/2012	Sheet Revisions	Colorado Department of Transportation	As Constructed
File Name: 19301BRDG_Northern_FramePlan01.dgn	Date: / Comments / Init.	902 Erie Avenue, Pueblo, CO 81001	No Revisions:
Horiz. Scale: 1:30 Vert. Scale:		Phone: 719-546-5438 FAX: 719-546-5702	Revised:
ATKINS 4601 DTC Boulevard, Suite 700, Denver, CO 80237, Phone: (303) 221-7275 Fax: (303) 221-7276		Region 2	Void:

NORTHERN AVENUE OVER I-25
FRAMING PLAN

Designer:	Structure Numbers	L-18-AQ	Project No./Code
Detailer:			
Sheet Subset:	Subset Sheets: of		Sheet Number 3

22463 11:07:11 AM \\DENFS06\Trans\Tramproj\100031632 - R2 Rehab\19301\Consultants\Bridge\Drawings\19301BRDG_Northern_FramePlan01.dgn

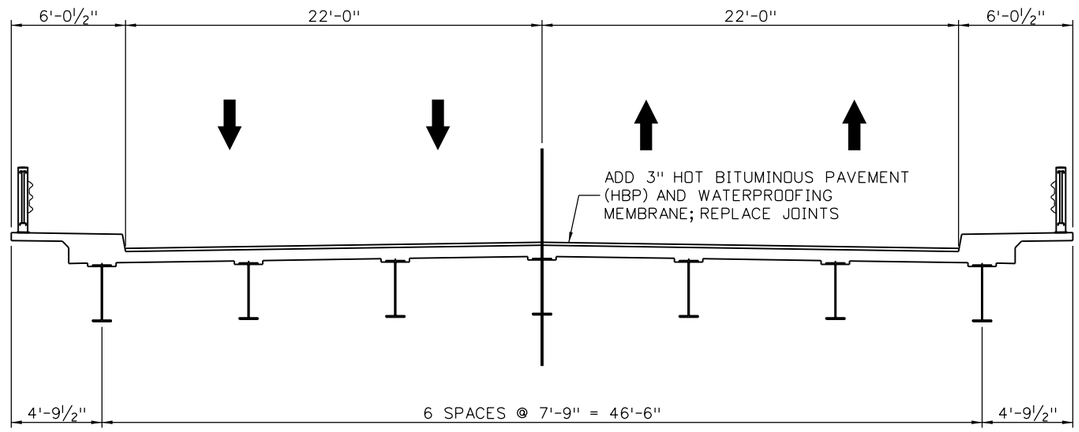

LEVEL A REHABILITATION TYPICAL SECTION

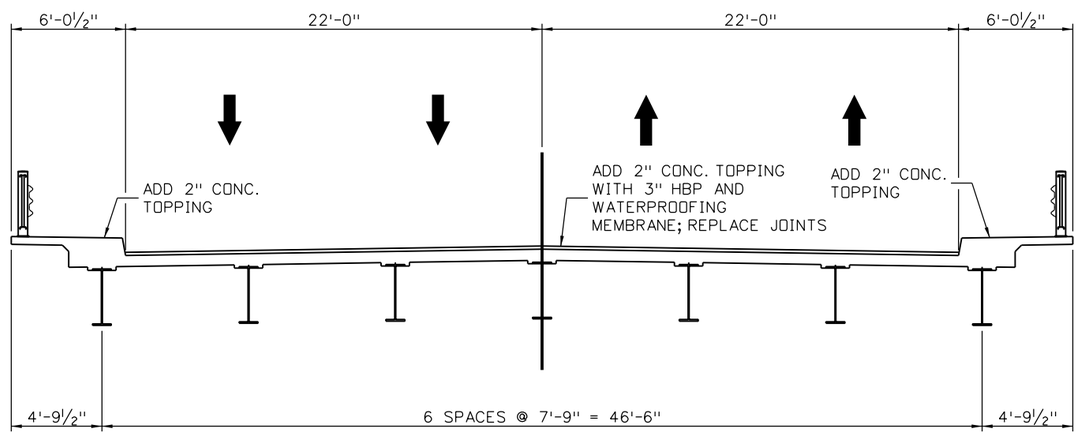

LEVEL B REHABILITATION TYPICAL SECTION

Print Date: 12/17/2012	Sheet Revisions	Colorado Department of Transportation	As Constructed
File Name: 19301BRDG_Northern_TypSec02.dgn	Date: / Comments / Init.	902 Erie Avenue, Pueblo, CO 81001, Phone: 719-546-5438 FAX: 719-546-5702	No Revisions:
Horiz. Scale: 1:8 Vert. Scale:		Region 2	Revised:
ATKINS 4601 DTC Boulevard, Suite 700, Denver, CO 80237, Phone: (303) 221-7275 Fax: (303) 221-7276			Void:

NORTHERN AVENUE OVER I-25
REHABILITATION LEVELS
SUPERSTRUCTURE (SHEET 1 OF 2)

Designer:	Structure Numbers	L-18-AQ
Detailer:		
Sheet Subset:	Subset Sheets: of	

Project No./Code

Sheet Number 4

22463 11:07:14 AM \\DENFS06\Trans\Tranproj\100031632 - R2 Rehab\19301\Consultants\Bridge\Drawings\19301BRDG_Northern_TypSec02.dgn

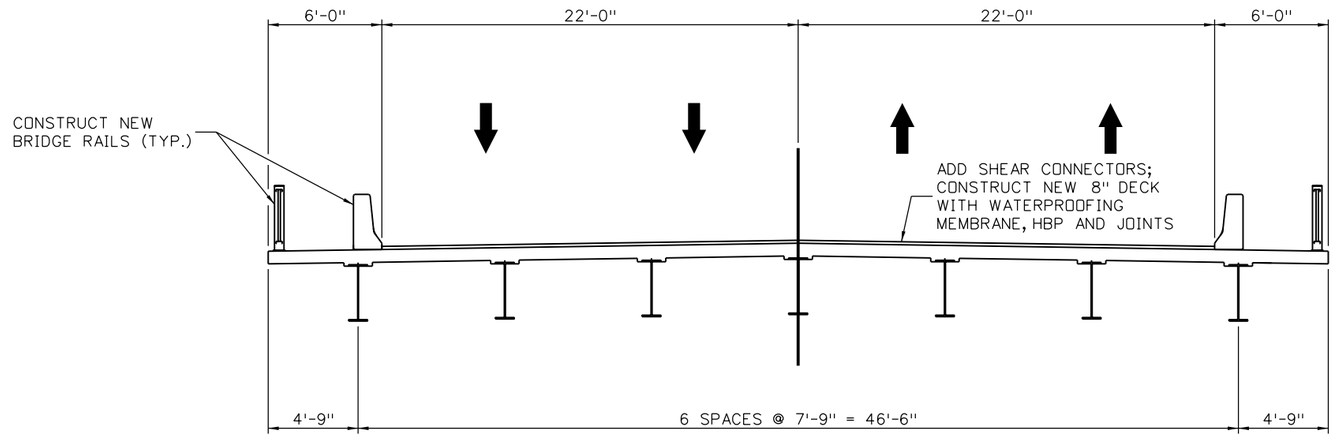

LEVEL C REHABILITATION TYPICAL SECTION

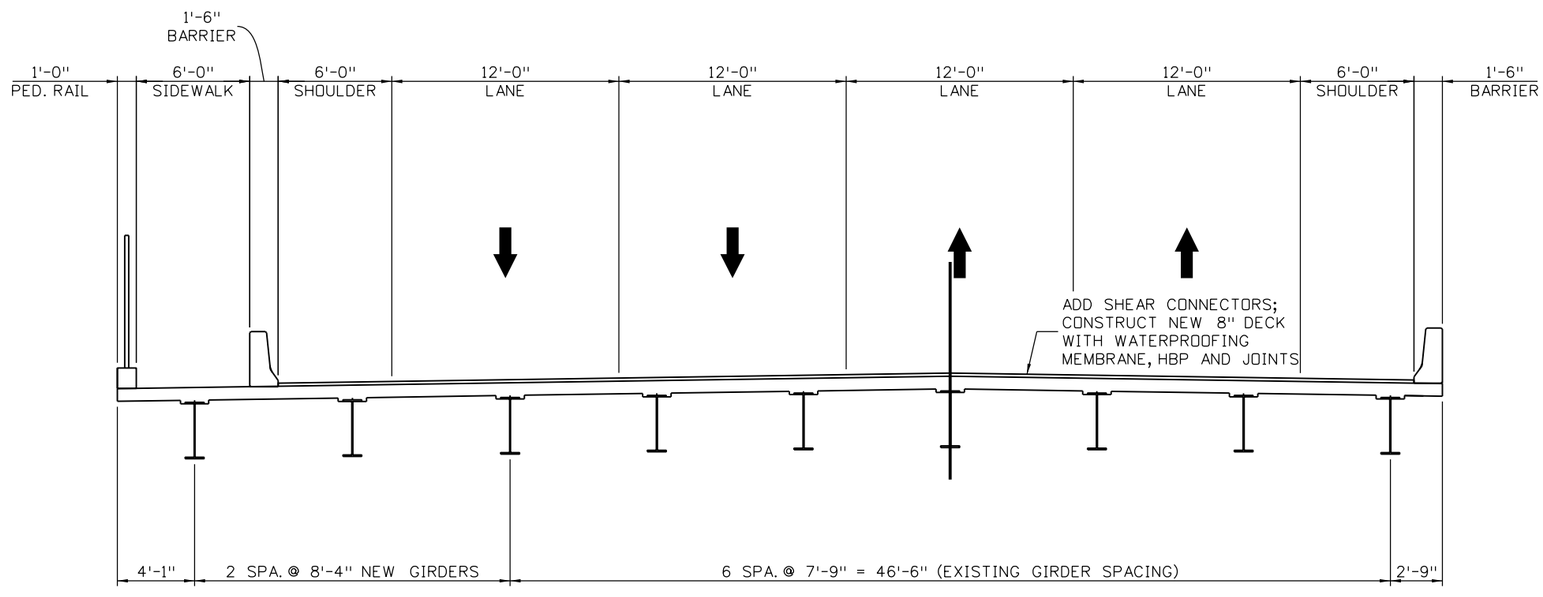

LEVEL D REHABILITATION TYPICAL SECTION

Print Date: 12/17/2012	Sheet Revisions	Colorado Department of Transportation	As Constructed	NORTHERN AVENUE OVER I-25 REHABILITATION LEVELS SUPERSTRUCTURE (SHEET 2 OF 2)	Project No./Code
File Name: 19301BRDG_Northern_TypSec03.dgn	Date: / Comments / Init.	902 Erie Avenue, Pueblo, CO 81001, Phone: 719-546-5438 FAX: 719-546-5702	No Revisions:	Designer: / Structure Numbers: L-18-AQ	
Horiz. Scale: 1:8 Vert. Scale:		Region 2	Revised:	Detailer:	
ATKINS 4601 DTC Boulevard, Suite 700, Denver, CO 80237, Phone: (303) 221-7275 Fax: (303) 221-7276			Void:	Sheet Subset: / Subset Sheets: of	Sheet Number 5

22463 11:07:17 AM \\DENFS06\Trans\Tranproj\100031632 - R2 Rehab\19301\Consultants\Bridge\Drawings\19301BRDG_Northern_TypSec03.dgn

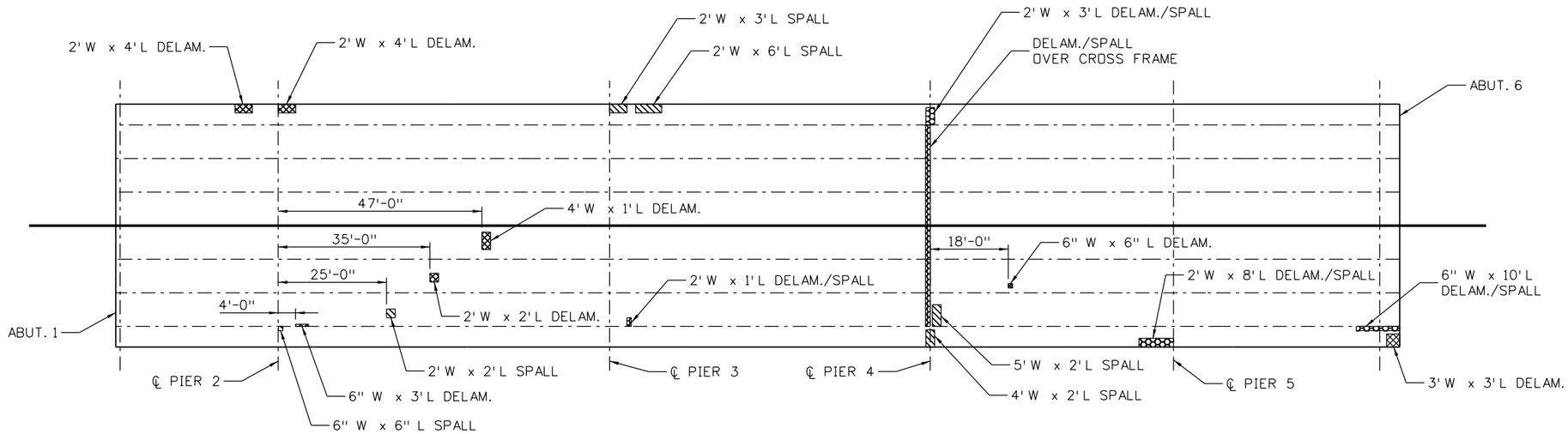

PLAN - BOTTOM OF DECK DEFICIENCIES

- DELAMINATED AREA
- SPALL WITH EXPOSED REBAR WITH SECTION LOSS
- DELAMINATED/SPALL WITH NO EXPOSED REBAR

LEVEL A - MINIMUM REHABILITATION

*PIER 2 WILL NEED TO BE ENCAPSULATED AND MADE INTEGRAL IN ORDER TO ELIMINATE THE FATIGUE PRONE CONNECTION ANGLES BETWEEN THE GIRDER ENDS.

1. USE PENETRATING CORROSION INHIBITOR TOP AND BOTTOM.
2. APPLY CONCRETE SEALER ON CURB AND SIDEWALK.
3. PATCH TOP OF THE CONCRETE DECK AND PROVIDE WATERPROOFING MEMBRANE AND HOT BITUMINOUS PAVEMENT (HBP).
4. NEW JOINT AT PIERS 2 & 4. PLUG JOINT AT ABUTMENTS.
5. PROVIDE 8-IN DRAIN PIPES ON EACH SIDE UPHILL FROM ABUTMENTS 1 & 6JOINTS, PIER 2 & 4 JOINTS
6. IT IS UNCERTAIN IF THE CONCRETE DECK WILL HAVE ANOTHER 30 YEAR OF SERVICE LIFE. A STAINLESS STEEL MESH ATTACHED BETWEEN GIRDERS OVER THE TRAFFIC LANES IS A FEASIBLE OPTION TO CATCH ANY FALLING CONCRETE.
7. W-BEAM ATTACHED TO RAIL (OPTIONAL THRIE-BEAM, TOPCOAT ALUMINIUM PAINT ON EXISTING RAIL). NOTE RAIL IS PROBABLY OUTSIDE THE CLEAR ZONE. SNAGGING CAN BE CORRECTED WITH A W OR THRIE-BEAM IN THE INSIDE FACE, AND EDGE PUNCHING BY AN ANGLE BETWEEN THE DECK AND BASEPLATE AT THE BACK (ONE LEG HORIZONTAL UNDER POSTS, ONE VERTICAL AT BACK OF POST).
8. OPTIONAL WASH AND TOPCOAT EXTERIOR GIRDERS ON SPAN 1.
9. PAINT THE DAMAGED PORTION OF THE DIAPHRAGMS AND BEARINGS AT ABUTMENTS AND PIERS 2 & 4.

LEVEL B - INTERMEDIATE REHABILITATION

1. SAME AS LEVEL A, EXCEPT MILL TOP OF DECK, UP TO 20% CLASS 2 AND 3 REMOVAL, BEFORE APPLYING THE CORROSION INHIBITOR. ADD 2-IN OF DT CONCRETE WITH STAINLESS MESH BEFORE PLACING THE WATERPROOF MEMBRANE AND THE HBP.
2. TREAT THE CURB AND SIDEWALK WITH CORROSION INHIBITOR.
3. RESET RAIL WITH W OR THRIE-BEAM RAIL. ADD AN ANGLE UNDER POSTS TO SPREAD PUNCHING LOAD.
4. THIRTY YEAR LIFE OF DECK IS PROBABLE WITH THE 2-IN DT CONCRETE TOPPING. A STAINLESS STEEL MESH ATTACHED BETWEEN GIRDERS OVER THE TRAFFIC LANES IS A FEASIBLE OPTION TO CATCH ANY FALLING CONCRETE.
5. CONSIDER TOPCOAT PAINT ON REMAINDER OF EXTERIOR GIRDERS.

LEVEL C - EXTENSIVE REHABILITATION

1. REMOVE AND REPLACE THE CONCRETE DECK.
2. ADD SHEAR CONNECTORS TO PROVIDE COMPOSITE ACTION BETWEEN THE GIRDERS AND THE CONCRETE DECK, WATERPROOF MEMBRANE AND HBP.
3. 8" DRAINS WITH BOX UPHILL FROM JOINT AT ABUTMENTS 1 & 6 AND PIERS 2 & 4.
4. PROVIDE NEW BRIDGE RAILS AND SHORT APPROACH SLABS AT ABUTMENT 6 TO MOVE LEAKAGE AWAY FROM ABUTMENT.
5. CONSIDER JOINT ELIMINATION AT PIER 2, ADD BEARING PAD AT ABUTMENT 1,
6. CONSIDER WASH AND TOPCOAT PAINT ON ALL GIRDERS AND DIAPHRAGMS.

Print Date: 12/17/2012
File Name: 19301BRDG_Northern_SuperRepair01.dgn
Horiz. Scale: 1:30 Vert. Scale:

ATKINS
4601 DTC Boulevard, Suite 700
Denver, CO 80237
Phone: (303) 221-7275 Fax: (303) 221-7276

Sheet Revisions		
Date:	Comments	Init.

Colorado Department of Transportation
902 Erie Avenue
Pueblo, CO 81001
Phone: 719-546-5438 FAX: 719-546-5702
Region 2

As Constructed
No Revisions:
Revised:
Void:

NORTHERN AVENUE OVER I-25
SUPERSTRUCTURE REPAIRS

Designer:
Detailer:
Sheet Subset:
Structure Numbers L-18-AQ
Subset Sheets: of

Project No./Code
Sheet Number 6

22463 11:07:19 AM \\DENFS06\Trans\Tranproj\100031632 - R2 Rehab\19301\Consultants\Bridge\Drawings\19301BRDG_Northern_SuperRepair01.dgn

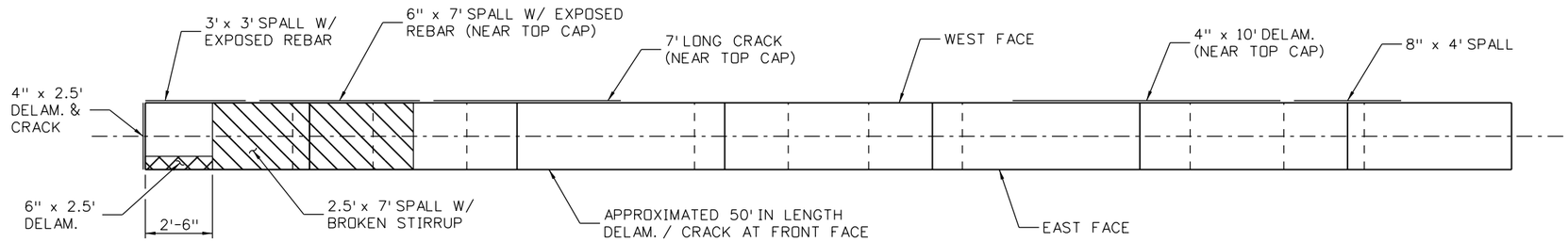

PIER 2 PLAN

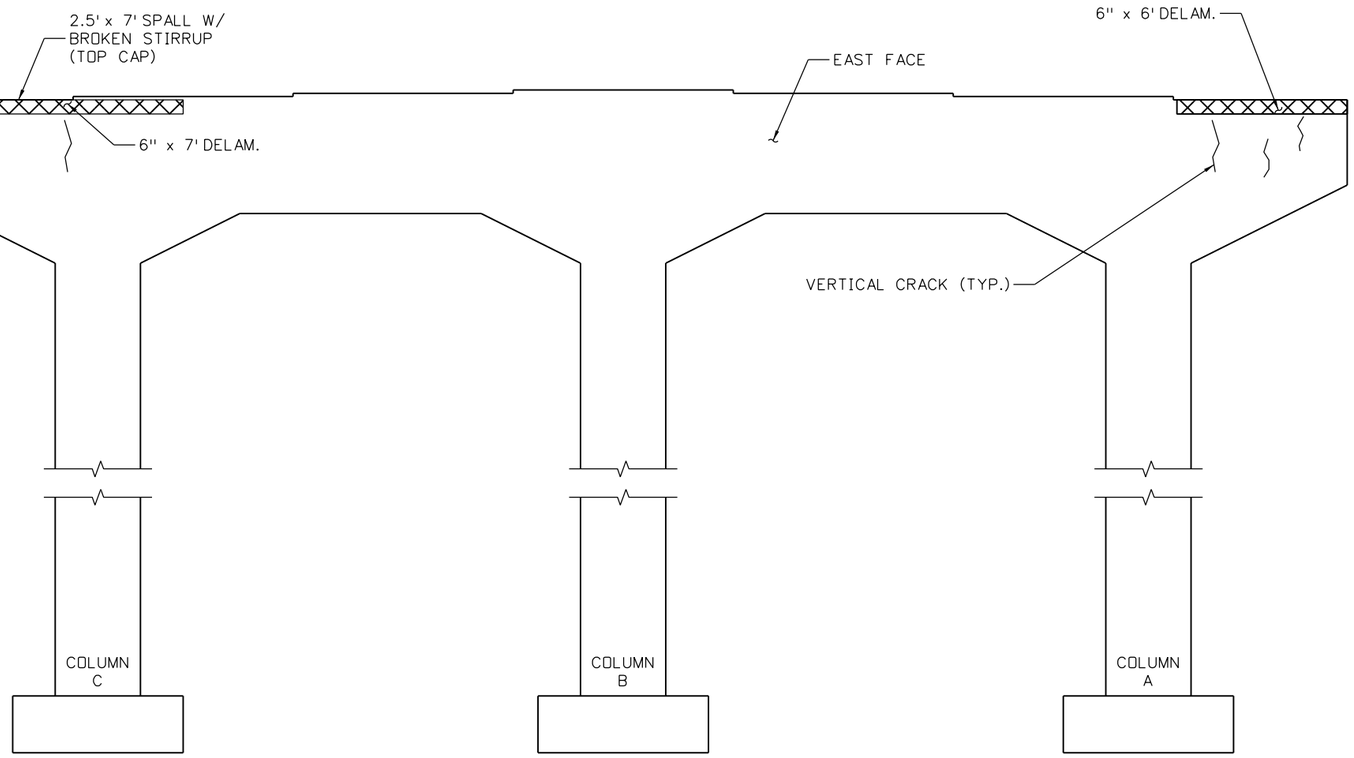

PIER 2 ELEVATION

LEVEL A - MINIMAL REHABILITATION

PIERS 2 & 4:
1. REMOVE ALL LOOSE AND DELAMINATED CONCRETE FROM THE CAP AND COLUMNS.
2. TREAT THE PIER CAPS AND COLUMNS WITH CORROSION INHIBITOR AND CONCRETE SEALER.
3. REPLACE BROKEN OR DAMAGED REINFORCEMENT.
4. WRAP THE PIER CAP OR COLUMNS WITH FRP.
5. PATCH OTHER MINOR SPALLS.

ABUTMENTS 1 & 6:
1. REMOVE ALL THE DELAMINATED CONCRETE.
2. TREAT THE ABUTMENT CAP AND COLUMNS WITH CORROSION INHIBITOR AND WRAP THE REPAIRED PORTION WITH FRP AT ABUTMENT 6.

LEVEL B - INTERMEDIATE REHABILITATION

*PIER 2 WILL NEED TO BE ENCAPSULATED AND MADE INTEGRAL IN ORDER TO ELIMINATE THE FATIGUE PRONE CONNECTION ANGLES BETWEEN THE GIRDER ENDS.

PIERS 2 & 4:
1. REMOVE ALL LOOSE AND DELAMINATED CONCRETE FROM THE CAP AND COLUMNS.
2. TREAT THE PIER CAPS AND COLUMNS WITH CORROSION INHIBITOR AND CONCRETE SEALER.
3. REPLACE BROKEN OR DAMAGED REINFORCEMENT.
4. WRAP THE PIER CAP OR COLUMNS WITH FRP.
5. PATCH OTHER MINOR SPALLS.

ABUTMENTS 1 & 6:
1. REMOVE ALL THE DELAMINATED CONCRETE.
2. TREAT THE ABUTMENT CAP AND COLUMNS WITH CORROSION INHIBITOR AND WRAP THE REPAIRED PORTION WITH FRP AT ABUTMENT 6.

LEVEL C - EXTENSIVE REHABILITATION

*PIER 2 WILL NEED TO BE ENCAPSULATED AND MADE INTEGRAL IN ORDER TO ELIMINATE THE FATIGUE PRONE CONNECTION ANGLES BETWEEN THE GIRDER ENDS.

PIERS 2 & 4:
1. REMOVE ALL LOOSE AND DELAMINATED CONCRETE FROM THE CAP AND COLUMNS.
2. TREAT THE PIER CAPS AND COLUMNS WITH CORROSION INHIBITOR AND CONCRETE SEALER.
3. REPLACEMENT BROKEN OR DAMAGED REINFORCEMENT.
4. WRAP THE PIER CAP OR COLUMNS WITH FRP.
5. PATCH OTHER MINOR SPALLS.

ABUTMENTS 1 & 6:
1. REMOVE ALL THE DELAMINATED CONCRETE.
2. TREAT THE ABUTMENT CAP AND COLUMNS WITH CORROSION INHIBITOR AND WRAP THE REPAIRED PORTION WITH FRP AT ABUTMENT 6.

SPALL WITH EXPOSED REBAR WITH SECTION LOSS

DELAMINATED AREA

Print Date: 12/17/2012	Sheet Revisions	Colorado Department of Transportation	As Constructed
File Name: 19301BRDG_Northern_PierRepair01.dgn	Date: / Comments / Init.	902 Erie Avenue, Pueblo, CO 81001	No Revisions:
Horiz. Scale: 1:5.33333 Vert. Scale:		Phone: 719-546-5438 FAX: 719-546-5702	Revised:
ATKINS 4601 DTC Boulevard, Suite 700, Denver, CO 80237, Phone: (303) 221-7275 Fax: (303) 221-7276		Region 2	Void:

NORTHERN AVENUE OVER I-25 SUBSTRUCTURE REPAIRS (SHEET 1 OF 2)

Designer: | Structure Numbers: L-18-AQ
Detailer:
Sheet Subset: | Subset Sheets: of

Project No./Code

Sheet Number 7

22463 11:07:23 AM \\DENFS06\Trans\Tranproj\100031632 - R2 Rehab\19301\Consultants\Bridge\Drawings\19301BRDG_Northern_PierRepair01.dgn

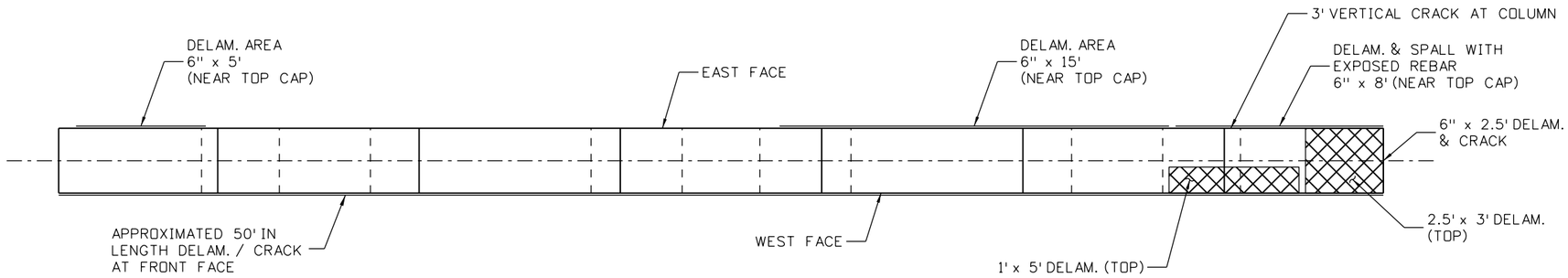

PIER 4 PLAN

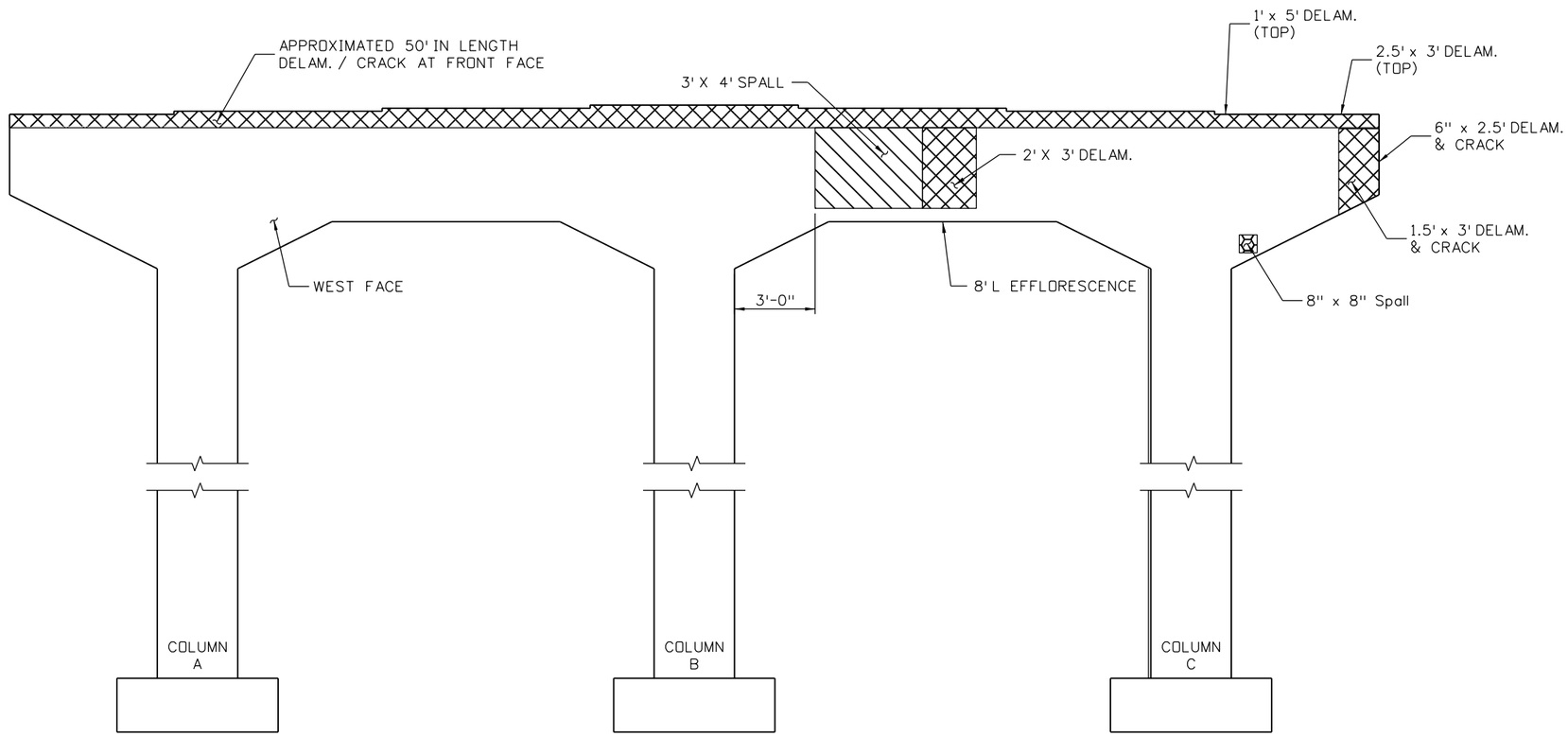

PIER 4 ELEVATION

NOTE:

FOR REHABILITATION NOTES, SEE SHEET 7.

SPALL WITH EXPOSED REBAR WITH SECTION LOSS

SPALL WITH NO EXPOSED REBAR

DELAMINATED AREA

Print Date: 12/17/2012	Sheet Revisions	Colorado Department of Transportation	As Constructed
File Name: 19301BRDG_Northern_PierRepair02.dgn	Date: / Comments / Init.	902 Erie Avenue, Pueblo, CO 81001	No Revisions:
Horiz. Scale: 1:5.33333 Vert. Scale:		Phone: 719-546-5438 FAX: 719-546-5702	Revised:
ATKINS 4601 DTC Boulevard, Suite 700, Denver, CO 80237, Phone: (303) 221-7275 Fax: (303) 221-7276		Region 2	Void:

NORTHERN AVENUE OVER I-25
SUBSTRUCTURE REPAIRS
(SHEET 2 OF 2)

Designer:
Detailer:
Sheet Subset:
Structure Numbers: L-18-AQ
Subset Sheets: of

Project No./Code

Sheet Number 8

22463 11:07:25 AM \\DENFS06\Trans\Tranproj\100031632 - R2 Rehab\19301\Consultants\Bridge\Drawings\19301BRDG_Northern_PierRepair02.dgn

CHAPTER 4

Mesa Avenue over I-25 Bridge

(L-18-AU)

4.1. Existing Bridge Condition

4.1.1 Description of Structure

The 255.25-ft long bridge, built in 1957, consists of five spans, non-composite, wide flange steel girders, carrying one lane in each direction. The bridge spans over I-25 southbound/northbound traffic and the BNFS railroad lines. The bridge is comprised of two units. Unit 1 is a 31'-6" single span. Unit 2 consists of four spans with span lengths of 49'-3", 62'-0", 62'-0" and 50'-6". The span lengths are measured between the centerline of bearings. The cross section of the bridge is symmetrical with curb-to-curb width of 40-ft providing one traffic lane in each direction and 6-ft raised pedestrian sidewalks with rails. The deck consists of cast-in-place concrete with an asphalt overlay.

Photo 4-1: Elevation View (Looking North)

The spans are comprised of six non-composite steel wide flange rolled girders spaced at 8'-6". Unit 1 consists of WF30x108 rolled shape girders. Unit 2 consists of 36WF150 rolled girders. Inverted "K" Intermediate and end cross frames consisting of channel and angle members are located in all the Bays. The spacing of the cross frames varies from 15'-6" to 20'-8". Rocker bearings are present at the end of the girder units. The minimum vertical clearance is approximately 15.8-ft.

The reinforced concrete piers are composed of three rectangular columns supported on individual spread footings. Abutment 1 is a stub abutment with existing ground sloped forward. Abutment 6 is an open abutment with four rectangular columns supported on individual spread footings with masonry stone backwall.

There is a 12-in water main attached to the cross frames in the Bay between girders E and F along the length of the bridge.

The annual average daily traffic (AADT) was 3,375 vehicles, with 5% truck traffic, in 2006 and is projected to be 4,759 vehicles in 2026. The roadway functional classification is a rural major collector system.

The label and numbering of the piers are based on the CDOT bridge inspection substructure numbering which goes from west to east starting at the abutment or first substructure unit. The numbering of the piers in the original plans goes from east to west starting with Abutment 1, Pier 1, Pier, 2, Pier 3, Pier 4, etc.

General Layout, Framing Plan, and Typical Section drawings of the existing bridge are located in section 4.4.

4.1.2. Sufficiency, Condition, and Appraisal Rating Summary

The bridge is classified as structurally deficient and has a sufficiency rating of 49.8 based on the latest bridge inspection report (see Table 4-1).

Bridge Name	Bridge Designation	Sufficiency Rating	Structurally Deficient?	Functionally Obsolete?	Deck (Item 58)	Superstructures (Item 59)	Substructures (Item 60)	Structural Condition (Item 67)	Deck Geometry (Item 68)	Underclearances (Item 69)	Waterway Adequacy (Item 71)	Approach Roadway Alignment (Item 72)
Mesa Ave. over I-25	L-18-AU	49.8	YES		4	6	4	4	6	3	N	8

Structurally Deficient
1. A condition rating of 4 or less for
Item 58 - Deck or
Item 59 - Superstructures or
Item 60 - Substructures or
Item 62 - Culvert and Retaining Walls or
2. An appraisal of 2 or less for
Item 67 - Structural Condition or
Item 71 - Waterway Adequacy

Functionally Obsolete
1. An appraisal rating of 3 or less for
Item 68 - Deck Geometry or
Item 69 - Underclearances or
Item 72 - Approach Roadway Alignment or
2. An appraisal of 3 or less for
Item 67 - Structural Condition or
Item 71 - Waterway Adequacy

Any bridge classified as structurally deficient is excluded from the functionally obsolete category.

Table 4-1 Sufficiency, Condition, and Appraisal Rating Summary

The comprehensive evaluation of the condition ratings for the Deck (Item 58), Superstructure (Item 59), and Substructure (Item 60) dating back to the 1970s revealed that the deterioration rate of the bridge has been steady. The current deficiencies have been present as far as 20 years ago. A detailed matrix of the deterioration rate can be found in Appendix B.

4.1.3. Load Capacity Analysis

According to the 2012 bridge inspection report, the operating and inventory ratings using load factor method were 35.2 and 21.1, respectively.

Load capacity analysis for the existing condition using the Load and Resistance Factor Rating (LRFR) method was evaluated for the bridge and the results are summarized below.

	Existing Bridge Condition		
Inventory	Ext. Girder Rating	Controlling Limit State	Location Span - (%)
	1.00	**Service II**	**1 - (50)**
	Int. Girder Rating	Controlling Limit State	Location Span - (%)
	1.08	**Service II**	**1 - (50)**
Operating	Ext. Girder Rating	Controlling Limit State	Location Span - (%)
	1.30	**Service II**	**1 - (50)**
	Int. Girder Rating	Controlling Limit State	Location Span - (%)
	1.40	**Service II**	**1 - (50)**
Permit	Ext. Girder Rating	Controlling Limit State	Location Span - (%)
	1.69	**Strength II**	**2 - (100)**
	Int. Girder Rating	Controlling Limit State	Location Span - (%)
	1.96	**Strength II**	**1 - (50)**

Table 4-2 Existing Condition Load and Resistance Factor Rating Summary

4.2. Structural Assessment Findings

The damage and deterioration of structural components are similar to those at the Northern Avenue over I-25 Bridge. A visual assessment of the bridge showed typical corrosion damage of the cross frame members and steel rolled girders over the piers associated with the deficiencies in the deck.

Joints at Abutments 1 and 6, Pier 2 are unsealed and are the probable cause of much of the deterioration of the deck bottom, girders, cross frame members, pier cap, and columns.

Damage to the bridge rails was associated with vehicular impact and snagging on the pickets and posts causing damage to the concrete sidewalk slab. The bridge rail, approximately15-ft from the through lane, may be outside the clear zone for the speed and volume of traffic

The underside of the deck had spalls and delaminated areas with exposed and corroded reinforcing bars. The concrete deck slab damage is mostly at the deck joints and the longitudinal construction joint. Superficial transverse cracks were visible in a few locations. Based on previous inspection reports, the deck bottom deterioration has been present for at least the last two decades with very little change over time. The bottom of deck appeared sound with some scaling and efflorescence.

The deterioration of the steel girders and cross frames is related to the leaking deck joints at Pier 2.

The pier caps exhibited concrete section loss exposing the longitudinal reinforcing bars and stirrups. Delamination and concrete spalls due to the deficiency in the concrete deck were visible on the Pier 2 columns. The low condition rating for substructure is caused by the deteriorated condition of the unsealed expansion joint at Pier 2. Pier 2 has been patched twice in the past; however, the open joint in the deck remains unsealed. The bottom of Abutment 6 cap has some moderate delamination of concrete and

localized damage to the columns. The Girder A bearing seat at Abutment 1 showed section loss with exposed rebars.

4.2.1. Superstructure

Deck

The underside of the deck slab was inspected near Piers 3, 4 and 5 during the bucket truck inspection. There were a few spalls with exposed reinforcement throughout the underside of the deck slab between girders but there were only a few that were reported here in this section since the photos were taken near the pier location from the bucket truck. From Pier 3, delamination and spalls with exposed reinforcement can be seen at photos D-1, D-2 and D-3. From Pier 4, some spalls were found with exposed reinforcement as shown in photos D-4, D-5 and D-6. And from Pier 5, see photos D-7 and D-8. A few cracks were also found at the underside of deck slab with chloride deposit as shown in photo D-9. A general view of deck underside in Span 2 with a few cracks and spalls was taken from Pier 2 looking east to Pier 3 as seen in photo D-10 and D-11. A general view of deck underside at Span 3 can be seen in photo D-12.

Photo D-1: Delamination (4ft x 8.5ft) at deck underside in Bay 3E, about 10ft from Pier 4.

Photo D-2: Spalls (2ft x 5ft) with exposed reinforcement and delamination in Bay 4C, about 5ft from Pier 4.

Photo D-3: Delamination at deck underside in Bay 3C near Pier 4.

Photo D-4: Multiple spalls (2in x 2ft x 7ft) with corroded reinforcement at deck underside in Bay 3E near Pier 3.

Photo D-5: Multiple spalls (2in x 2ft x 6ft) with exposed reinforcement at deck underside in Bay 3D near Pier 3.

Photo D-6: Spalls (2in x 2ft x 10ft) with exposed reinforcement at deck underside in Bay 3D above Pier 3.

Photo D-7: Large area of spalls with exposed reinforcement at deck underside in Bay 2C near Pier 2.

Photo D-8: Few spalls (2in x 2ft x 3ft) with exposed reinforcement at deck underside in Bay 2 about 10ft from Pier 3.

Photo D-9: Crack and delamination at deck underside about 5ft from Pier 3.

Photo D-10: Deck underside at Span 2 - West looking East (or from Pier 2 looking Pier 3).

Photo D-11: Deck underside at Bay 2D and 2E.

Photo D-12: Deck underside at Span 3 – East looking West (or from Pier 4 looking Pier 3).

Bridge Rail

Railings on both side of bridge appeared to be in good condition. There were some minor corrosion at both top and bottom railings, picket rails and base plates as seen in photo R1-2. Picket rail was bent at mid-span on left side of bridge as shown in photo R1-3.

Photo R-1: Bridge rails from East looking West.

Photo R-2: Typical rust and primer showing through paint at railing.

Photo R-3: Bent at picket rail on left bridge near mid-span.

Curb/Sidewalk

The curb and sidewalk is in fairly good condition with some superficial cracks.

Photo CS-1: North sidewalk

Girders

All girder ends and connections over Piers 2, 3 and 4 appeared to be in good shape with no signs of section loss. There were a few locations with some corrosion occurred at the top and bottom flanges as shown in photos S-1 and S-2 below, also scattered peeling paint and primer showing through in many areas.

Photo S-1: Girder 2A at Bay 2A over Pier 2.

Photo S-2: Girder 2F at Bay 2E over Pier 2.

Cross Frame (At Piers 2, 3 and 4)
Most of the cross frames were in good condition but a few of them had some minor corrosion as shown in photos C-1 and C-2 below.

Photo C-1: Cross frame at Bay 2A over Pier 2.

Photo C-2: Cross frame at Bay 2E over Pier 2.

Expansion Joints

The expansion joint along the deck width at Pier 2 and Abutment 6 had some small cracks and potholes that can be seen in photos E1-1 and E1-2.

Photo E-1: West expansion joint at Pier 2

Photo E-2: East expansion joint at Abutment 6

4.2.2. Substructure

Bearings

All the bearings at Piers 2, 3 and 4 were in a good condition with no signs of section loss. There were some corrosion to the bearings at Pier 2 as shown in photo B2-1 and B2-2 below. A few bearing plate and bolt connection at Pier 2 were corroded as seen in photos B2-3, B2-4 and B2-5.

Photo B2-1: Bearing and bolt connection at girder 2A – Pier 2.

Photo B2-2: Bearing at girder 2A over Pier 2.

Photo B2-3: Bearing and bolt connection at girder 2D - Pier 2.

Photo B2-4: Corroded nut at bearing plate, girder 2E – Pier 2.

Photo B2-5: Corroded nut at bearing plate, girder 2F - Pier 2.

Photo B2-6: Bearing at girder E - Abutment 6

Photo B2-7: Bearing at Abutment 6

Piers

Pier 2 – Cap

The pier cap was inspected starting from the North to the South of Pier 2 and the visual inspection found a few deficiencies that could affect the strength and/or serviceability of either the pier element or to the bridge. These deficiencies were found at top and along the face of pier cap. A longitudinal crack / delamination at the East face near the top cap that extended from one end to the other end of the pier cap as shown in photo P2-1. A delamination on the East face at the North end of pier cap was found with about 1-in open gap and a few cracks in the low area (See photo P2-2 and P2-3). Others delamination at the East face are shown in photos P2-4, P2-5 and P2-6. The South face of the pier cap also had some delamination as seen in photos P2-7 and P2-8. The vertical and longitudinal cracks were found along the East face of the pier cap as shown in photo P2-9.

Photo P2-1: Delamination / crack along East face of pier cap, approximated 47ft length.

Photo P2-2: Delamination area (1.5ft x 3ft) on East face at North side of end cap.

Photo P2-3: Delamination area (1.5ft x 3ft) on East face at North side of end cap.

Photo P2-4: Delamination / crack along cap length (approximated 47ft) at East face.

Photo P2-5: Delamination / crack along cap length (approximated 47ft) at East face.

Photo P2-6: Delamination / crack at top of pier cap in Bay 2E with an area 8.5ft x 2.5ft.

Photo P2-7: Delamination / cracks at South face of pier cap, approximated area 2.5ft x 2ft

Photo P2-8: Delamination on East face at South end of pier cap, approximated 1ft x 3ft.

Photo P2-9: Vertical crack and delamination at East face of pier cap.

Pier 3 – Cap

Pier 3 was inspected from the South to the North and it appears to be in a good condition with no major deficiency. There was a small spalls/delamination at the top pier cap (See photo P3-1).

Photo P3-1: Top pier cap at girder 3B.

Pier 4 – Cap

The pier cap was inspected starting from the South to the North of Pier 4 (See photo P4-1). In general, the pier cap was in a good condition, the typical top pier cap can be seen from photo P4-2.

Photo P4-1: West elevation at pier 4 – South looking North.

Photo P4-2: Top pier cap.

Abutments

Abutments appeared to be in good condition with no signs of cracks or extensive damage.

AB-1: North side of Abutment 6

AB-2: Abutment 6 cap bottom

AB-3: Abutment 6 cap bottom

AB-4: Abutment 6 column

AB-5: Abutment 6 cap bottom

AB-6: Abutment 1, Girder A bearing seat

Retaining Walls

Retaining walls appeared to be in good condition with no signs of cracks or extensive damage.

W-1: North side of Abutment 6

W-1: North side of Abutment 6

4.3. Rehabilitation Evaluation

4.3.1. Rehabilitation Alternatives

Level A - Minimal Rehabilitation

Structurally Deficient or Functionally Obsolete Evaluation

- Low under clearance rating (FO) can be corrected by restriping I-25 southbound mainline for a 9-ft inside and a 10-ft outside shoulder.

Superstructure

- Use penetrating corrosion inhibitor top and bottom of the deck.
- Apply concrete sealer on curb and sidewalk.
- Patch top of the concrete deck and provide waterproofing membrane and Hot Bituminous Pavement (HBP).
- Install new joint at Pier 2. Plug joint at abutments.
- Provide 8-in drain pipes on each side uphill from Abutments 1 and 6 joints and Pier 2 joint.
- It is uncertain if the concrete deck will have another 30 year of service life. A stainless steel mesh attached between girders over the traffic lanes is a feasible option to catch any falling concrete.
- W-beam attached to rail (optional Thrie-beam, topcoat aluminium paint on existing rail). Note rail is probably outside the clear zone. Snagging can be corrected with a W or Thrie-beam in the inside face, and edge punching by an angle between the deck and baseplate at the back (one leg horizontal under posts, one vertical at back of post).
- Optional wash and topcoat exterior girders on Span 1.
- Paint the damaged portion of the diaphragms and bearings at Pier 2.

Substructure

- Pier 2:
    - Remove all loose and delaminated concrete from the caps and columns.
    - Replace reinforcing with significant section loss.
    - Treat the pier caps and columns with corrosion inhibitor and concrete sealer.
    - Add a reinforcing cage and encapsulate with 4-in of Concrete Class DT (Deck Topping).
- Abutments 1 and 6:
    - Remove all the delaminated concrete.
    - Replace reinforcing with significant section loss.
    - Treat the abutment cap and columns with corrosion inhibitor and concrete sealer.

Level B - Intermediate Rehabilitation

Structurally Deficient or Functionally Obsolete Evaluation

- Low under clearance rating (FO) can be corrected by restriping I-25 southbound mainline for a 9-ft inside and a 10-ft outside shoulder.

Superstructure

- Same as Level A, except mill top of deck, up to 20% Class 2 and 3 removal, before applying the corrosion inhibitor. Add 2-in of Concrete Class DT (Deck Topping) with stainless mesh (including curb and sidewalk) before placing the waterproof membrane and the HBP.
- Treat the curb and sidewalk with corrosion inhibitor.
- Reset rail with W or Thrie-beam rail. Add an angle under posts to spread punching load.
- Thirty year life of deck is probable with the 2-in Concrete Class DT (Deck Topping). A stainless steel mesh attached between girders over the traffic lanes is a feasible option to catch any falling concrete.
- Consider topcoat paint on remainder of exterior girders.

Substructure

- Pier 2:
    - Remove all loose and delaminated concrete from the cap and columns.
    - Replace reinforcing with significant section loss.
    - Treat the pier caps and columns with corrosion inhibitor and concrete sealer.
    - Add a reinforcing cage with stainless steel welded wire fabric and encapsulate with 4-in of DT concrete.
- Abutments 1 and 6:
    - Remove all the delaminated concrete.
    - Treat the abutment cap and columns with corrosion inhibitor and wrap the repaired portion with FRP at Abutment 6.

Level C - Extensive Rehabilitation

Structurally Deficient or Functionally Obsolete Evaluation

- Low under clearance rating (FO) can be corrected by restriping I-25 southbound mainline for a 9-ft inside and a 10-ft outside shoulder.

Superstructure

- Remove and replace the concrete deck.
- Add shear connectors to provide composite action between the girders and the concrete deck, waterproof membrane and HBP.
- 8-in drain pipes with box uphill from joints at Abutments 1 and 6 and Pier 2.
- Provide new bridge rails and short approach slabs at Abutment 6 to move leakage away from abutment.
- Consider joint elimination at Pier 2, add bearing pad at Abutment 1,
- Consider wash and topcoat paint on all girders and diaphragms.

Substructure

- Pier 2:
    - Remove all loose and delaminated concrete from the cap and columns.
    - Replace reinforcing with significant section loss.
    - Treat the pier caps and columns with corrosion inhibitor and concrete sealer.
    - Add a reinforcing cage with stainless steel welded wire fabric and encapsulate with 4-in of DT concrete.
- Abutments 1 and 6:
    - Remove all the delaminated concrete.
    - Treat the abutment cap and columns with corrosion inhibitor and wrap the repaired portion with FRP at Abutment 6.

4.3.2. Load Capacity Analysis of Rehabilitation Alternatives

Load capacity analyses using LRFR method were evaluated for each of the rehabilitation alternatives with the following consideration:

Level A – Minimum Rehabilitation
The inventory rating shall be at least 0.77 HL93 on a strength basis. The permit vehicle shall be evaluated to carry a single lane mixed with traffic with 20% impact.

Level B – Intermediate Rehabilitation
The inventory rating shall be at least 0.85 HL93 on strength basis. The permit vehicle shall be evaluated to carry a single lane mixed with traffic with 20% impact. Exterior girder may be evaluated as single trip mixed with traffic basis for those bridges with shoulders.

Level C – Extensive Rehabilitation
The inventory rating shall be at least 0.95 HL93 on strength basis. The permit vehicle shall be evaluated to carry a single lane mixed with traffic with 20% impact. Exterior girder may be evaluated as single trip mixed with traffic basis for those bridges with shoulders.

Below table is a summary of the rating values for each alternative:

	Level A Rehabilitation		
Inventory	Ext. Girder Rating	Controlling Limit State	Location Span - (%)
	1.01	**Service II**	**1 - (50)**
	Int. Girder Rating	Controlling Limit State	Location Span - (%)
	1.10	**Service II**	**1 - (50)**
Operating	Ext. Girder Rating	Controlling Limit State	Location Span - (%)
	1.32	**Service II**	**1 - (50)**
	Int. Girder Rating	Controlling Limit State	Location Span - (%)
	1.43	**Service II**	**1 - (50)**
Permit	Ext. Girder Rating	Controlling Limit State	Location Span - (%)
	1.72	**Strength II**	**2 - (100)**
	Int. Girder Rating	Controlling Limit State	Location Span - (%)
	2.01	**Strength II**	**1 - (50)**
	Level B Rehabilitation		
Inventory	Ext. Girder Rating	Controlling Limit State	Location Span - (%)
	0.97	**Service II**	**1 - (50)**
	Int. Girder Rating	Controlling Limit State	Location Span - (%)
	1.05	**Service II**	**1 - (50)**
Operating	Ext. Girder Rating	Controlling Limit State	Location Span - (%)
	1.26	**Service II**	**1 - (50)**
	Int. Girder Rating	Controlling Limit State	Location Span - (%)
	1.37	**Service II**	**1 - (50)**
Permit	Ext. Girder Rating	Controlling Limit State	Location Span - (%)
	1.64	**Strength II**	**2 - (100)**
	Int. Girder Rating	Controlling Limit State	Location Span - (%)
	1.93	**Strength II**	**1 - (50)**

	Level C Rehabilitation		
Inventory	Ext. Girder Rating	Controlling Limit State	Location Span - (%)
	1.28	**Strength I**	**2 - (100)**
	Int. Girder Rating	Controlling Limit State	Location Span - (%)
	1.48	**Strength I**	**2 - (100)**
Operating	Ext. Girder Rating	Controlling Limit State	Location Span - (%)
	1.66	**Strength I**	**2 - (100)**
	Int. Girder Rating	Controlling Limit State	Location Span - (%)
	1.91	**Strength I**	**2 - (100)**
Permit	Ext. Girder Rating	Controlling Limit State	Location Span - (%)
	1.63	**Strength II**	**2 - (100)**
	Int. Girder Rating	Controlling Limit State	Location Span - (%)
	2.03	**Strength II**	**1 - (100)**

The inventory ratings above passed the LRFR rating criteria specified for this project because Service II is the controlling limit state. The rating values for the Strength I limit states are higher for these type of wide flange rolled compact steel sections.

4.3.3. Quantities/Cost Estimates

The probable construction costs associated with each rehabilitation alternative and replacement were evaluated. The cost/SF/yr is based on the life expectancy of the level of rehabilitation. The life expectancy for Rehabilitation Levels A, B, C, and replacement options are 20, 30, 50, and 75 years, respectively. Below is a summary of the estimated costs for each alternative.

Level A Rehabilitation			***Level B Rehabilitation***		
Cost	Cost/SF	Cost/SF/yr	Cost	Cost/SF	Cost/SF/yr
$476,282	**$35.09**	**$1.75**	**$910,950**	**$67.12**	**$2.24**

Level C Rehabilitation			***Replacement***		
Cost	Cost/SF	Cost/SF/yr	Cost	Cost/SF	Cost/SF/yr
$1,236,846	**$91.13**	**$1.82**	**$2,360,429**	**$146.43**	**$1.95**

A summary of the quantities used to determine the probable construction cost for each alternative are presented in the following table.

4.3.4. Rehabilitation Alternative Evaluation

Long-Term Evaluation

There is a possibility that the I-25 SB alignment may move east of the BNFS railroad lines which will have an impact on the existing bridge. The crest of the vertical curve is located over the railroad lines about 15-ft west of the mainline track (crest at station 2+27). The mainline appears to be 25-ft clear from the piers. The portion of the structure west of the railroad would still be needed to bring the vertical level of Mesa Avenue Bridge down to the level of the adjacent streets on the west. However, the grade is relatively steep by current practice (10%). The portion of the structure east of the railroad could be extended with another unit at a grade appropriate to cross over the new I-25, with adjustments in the haunch as needed. About 90-ft of the deck on the west end of the current Mesa Avenue over I-25 Bridge would need to be replaced for the grade change with a new pier immediately adjacent to the current pier at the east abutment.

Potential Risk and Other Factors

Rehabilitation criteria categories may not be clear cut, but longer life increases the benefit of greater functionality. A longer life provides a greater opportunity to recover the costs of a more extensive rehabilitation with reduced maintenance and deferred replacement expenses. Skipping one of the criteria may introduce a greater risk of a structure becoming dysfunctional over time.

Justifiable costs are based on rough equity to new bridge costs in 2012 prorated over the target life. Sometimes rehabilitation is justified on the simple basis that a replacement is impractical or something needs to be done fairly immediately at the time the evaluation for improvement is made. Rehabilitation may also be justified if some form of needed corridor change in the foreseeable future will make a new structure, or extensively rehabilitated structure obsolete before its time.

A bridge can be “poor” as indicated by the sufficiency rating of FO or SD for 10 or more years yet continue to function effectively depending on many factors. A deck with a condition rating of 4 may not present any operational problems, but indicates it is deteriorating towards condition rating 3 which will almost certainly have significant operational and maintenance problems. For example, bridge decks are

usually given a condition rating of 4 and classified as structurally deficient when there is significant evidence of delamination and reinforcing corrosion. Delamination alone has several risks:

- **Potholes in the surfacing**

  Potholes in the surface can be mitigated by a relatively thick bonded concrete topping (not patching) and/or an HBP overlay which can slow the development of pop-outs in the surfacing if not placed over broken-up or loose material. Heavy traffic tends to break up additional delamination quickly, while thicker topping and lighter traffic tends to have slower deterioration. Quality of the topping bond tends to retard deterioration. One mechanism for added potholes to form is the same as on roadway pavement: freezing water tapped within the pavement. Good drainage, dense waterproof topping materials and an absence of loose or porous material under the topping will reduce freezing-induced pop-outs. Every effort should be made to not trap porous material under the topping.

- **Falling concrete**

  Falling concrete can be mitigated by some sort of catcher. Note the risk associated with falling concrete may be more perceptual than significant as the result is seldom worse that it is with other debris in the road. Falling concrete may not be as significant risk as rock fall, which is tolerated as a risk.

- **Holes entirely through the deck**

  Holes entirely through the deck have a similar risk profile and mitigations to prevent potholes as potholes in the surfacing and falling concrete combined. If the reinforcing is still intact, the issue is that repair is an emergency situation. If the reinforcing is not intact the consequences to a vehicle can be more significant.

There are other risks that should be considered for rehabilitations with a significant expected life. Some of these risks may not be a priority due to lack of a prior problem with the particular structure and with similar structures. This may be sufficient to indicate the risk is somewhat low over the time periods the structure has been in service. These risks include the following:

- **Collision**

  Collision by trucks and trains is a significant cause of structure collapse. Risk tends to decrease with increasing clear zone and with increasing member strength. Many structures have sufficient redundancy to resist collapse with a member failure.

- **Earthquake**

  Earthquakes are not generally a problem in Colorado, but all structures should have the superstructure effectively connected to the substructure, or sufficiently lap over the seat. Rockers under simple span ends are a high risk element (also for scour and collision), unless motions are effectively limited.

- **Overloading**

  Generally, HL93 strength operating capacity evaluated with realistic ADTT and other adjustment factors will provide a low risk of loading beyond design limits. In Colorado the permit vehicle also provides a check against an errant legal permitted vehicle causing damage.

- **Brittle Fracture**

  Many structures have a risk of brittle fracture, especially those with older steel. Built-up riveted structures normally have cracks stop at rivet holes, limiting strength loss. Wide-flange rolled structures are susceptible to brittle fracture, if they are from the pre-Charpy testing era and should be checked for sufficient redundancy (four or more parallel members if simple span). Concrete pier caps may be a problem, but if integral with two or more columns supporting a superstructure with redundancy, there is probably not a brittle collapse issue. If seemingly subject to brittle fracture, structures can be checked with plastic analysis (probably assuming one lane of HL93 or a permit vehicle and a load factor of 1.1 for DL and LL) with a member failed to a pinned condition at the assumed brittle fracture location.

4.3.5. Recommendations

Given the information presented in this chapter, it is recommended that this bridge follow Level A rehabilitation option which consists of minimal rehabilitation to the superstructure and substructure components. The cost estimates and load capacity meet the Level A rehabilitation criteria established in this report. Level A Rehabilitation was chosen due to the very low deteriorating rates, continuity of the deck at the piers, and the light traffic volume. Therefore, 30 year of life can be achieved with this level of rehabilitation. The functional obsolete (FO) classification can be corrected by adjusting re-striping I-25 SB to provide a standard outside shoulder.

4.4. Conceptual Plans

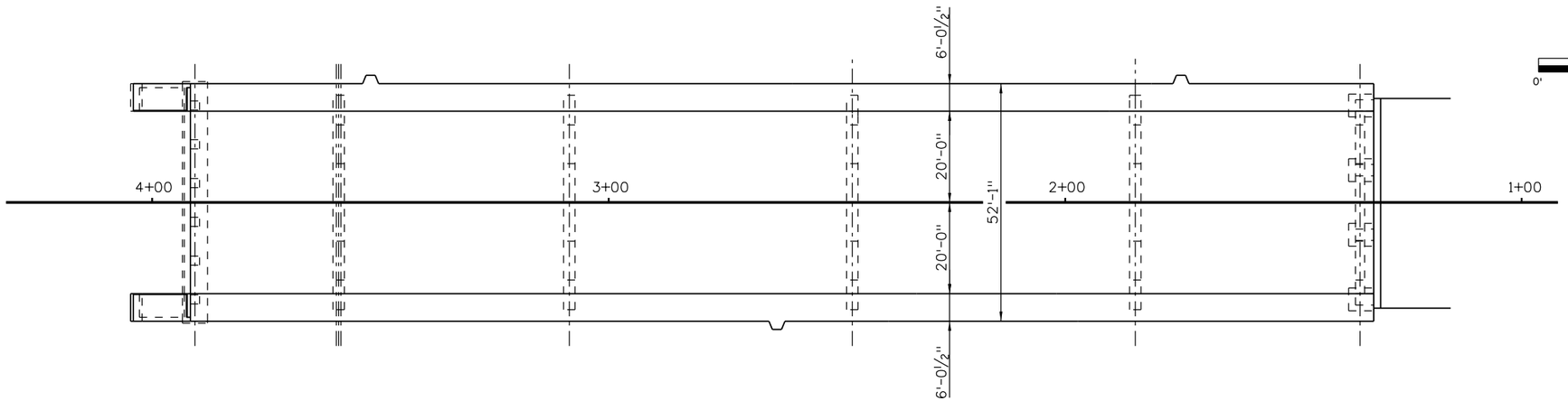

PLAN

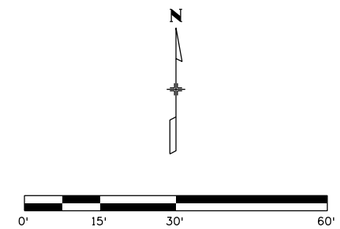

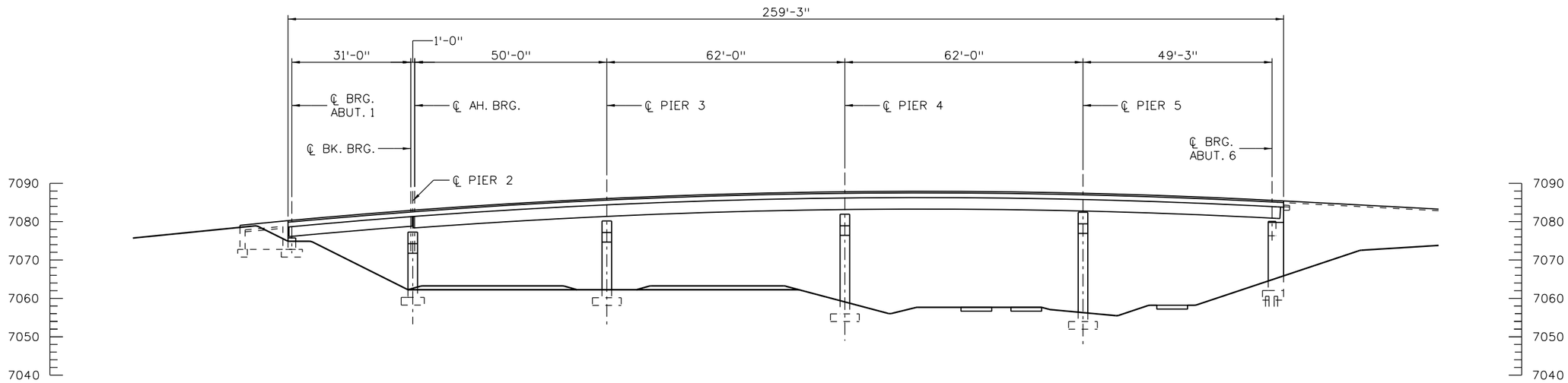

ELEVATION

Print Date: 12/17/2012	Sheet Revisions			Colorado Department of Transportation	As Constructed
File Name: 19301BRDG_Mesa_GenLayout01.dgn	Date:	Comments	Init.	902 Erie Avenue Pueblo, CO 81001 Phone: 719-546-5438 FAX: 719-546-5702	No Revisions:
Horiz. Scale: 1:30 Vert. Scale:				Region 2	Revised:
ATKINS 4601 DTC Boulevard, Suite 700 Denver, CO 80237 Phone: (303) 221-7275 Fax: (303) 221-7276					Void:

MESA AVENUE OVER I-25 GENERAL LAYOUT			Project No./Code
Designer:	Structure Numbers	L-18-AU	
Detailer:			
Sheet Subset:	Subset Sheets: of		Sheet Number 1

22463 11:03:55 AM \\DENFS06\Trans\Transproj\100031632 - R2 Rehab\19301\Consultants\Bridge\Drawings\19301BRDG_Mesa_GenLayout01.dgn

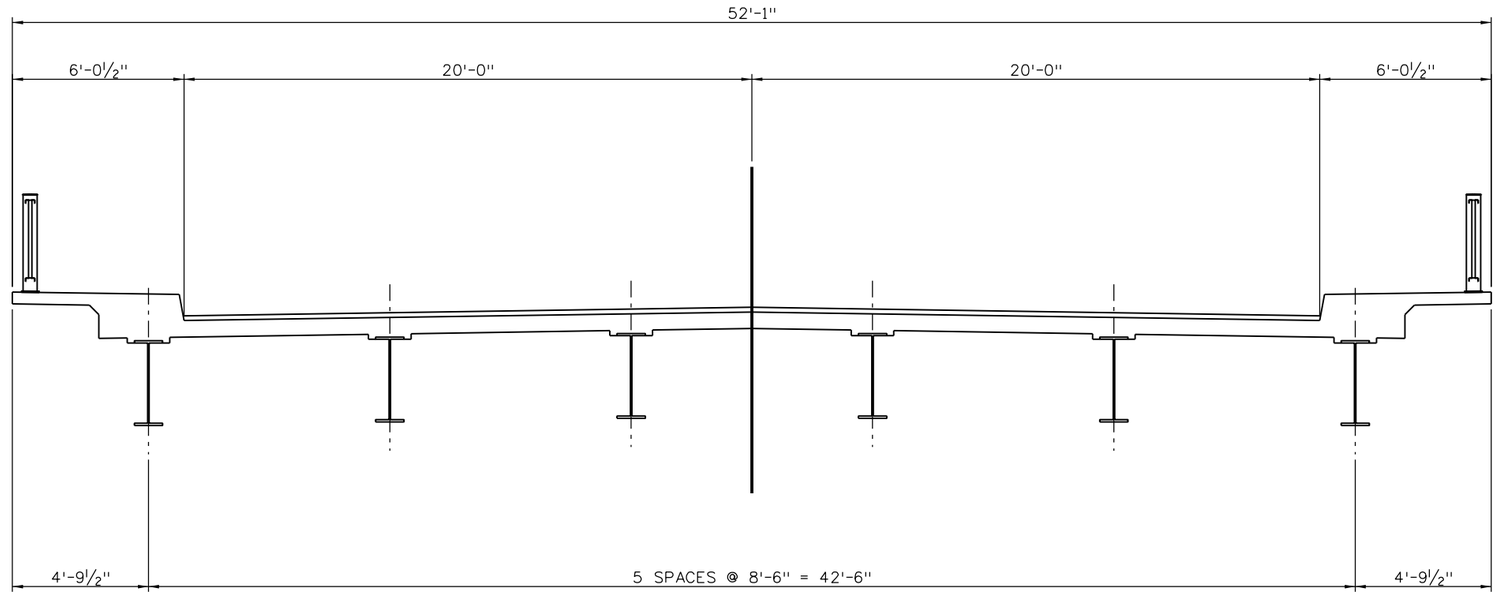

TYPICAL SECTION

Print Date: 12/17/2012	Sheet Revisions	Colorado Department of Transportation	As Constructed
File Name: 19301BRDG_Mesa_TypSec01.dgn	Date: / Comments / Init.	902 Erie Avenue, Pueblo, CO 81001	No Revisions:
Horiz. Scale: 1:5.33333 Vert. Scale:		Phone: 719-546-5438 FAX: 719-546-5702	Revised:
ATKINS 4601 DTC Boulevard, Suite 700, Denver, CO 80237, Phone: (303) 221-7275 Fax: (303) 221-7276		Region 2	Void:

MESA AVENUE OVER I-25
TYPICAL SECTION

Designer:
Detailer:
Sheet Subset:
Structure Numbers: L-18-AU
Subset Sheets: of

Project No./Code

Sheet Number 2

22463 11:03:58 AM \\DENFS06\Trans\Tranproj\100031632 - R2 Rehab\19301\Consultants\Bridge\Drawings\19301BRDG_Mesa_TypSec01.dgn

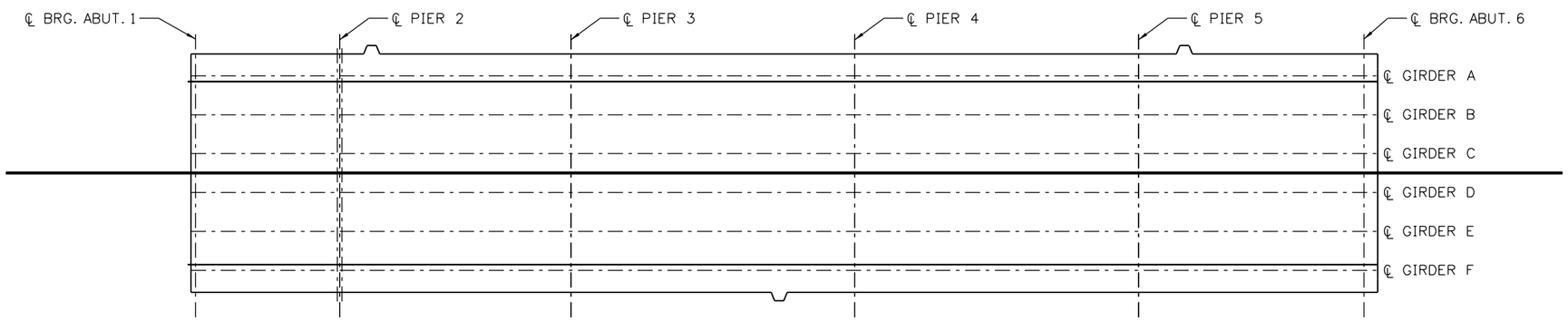

PLAN

Print Date: 12/17/2012	Sheet Revisions				Project No./Code
File Name: 19301BRDG_Mesa_FramePlan01.dgn	Date:	Comments	Init.	As Constructed	MESA AVENUE OVER I-25 FRAMING PLAN
Horiz. Scale: 1:30 Vert. Scale:				No Revisions:	
ATKINS 4601 DTC Boulevard, Suite 700 Denver, CO 80237 Phone: (303) 221-7275 Fax: (303) 221-7276				Revised:	Designer: / Structure Numbers: L-18-AU
				Void:	Detailer:
					Sheet Subset: / Subset Sheets: of
					Sheet Number 3

Colorado Department of Transportation
DOT
DEPARTMENT OF TRANSPORTATION
902 Erie Avenue
Pueblo, CO 81001
Phone: 719-546-5438 FAX: 719-546-5702
Region 2

22463 11:04:00 AM \\DENFS06\Trans\Tranproj\100031632 - R2 Rehab\19301\Consultants\Bridge\Drawings\19301BRDG_Mesa_FramePlan01.dgn

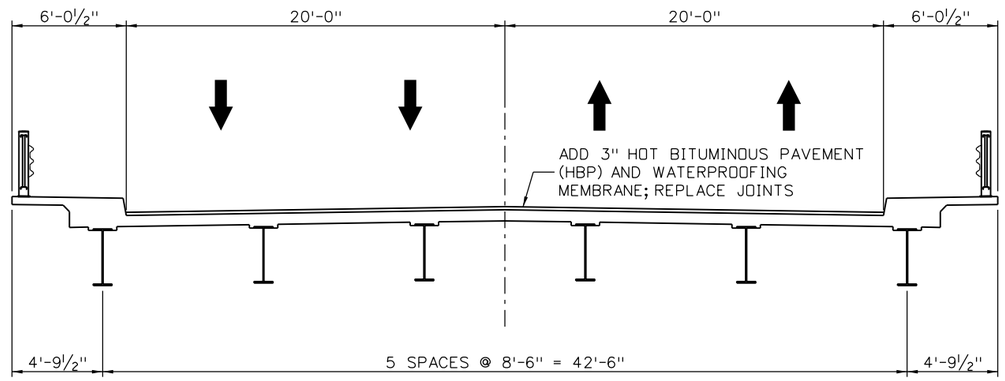

LEVEL A REHABILITATION TYPICAL SECTION

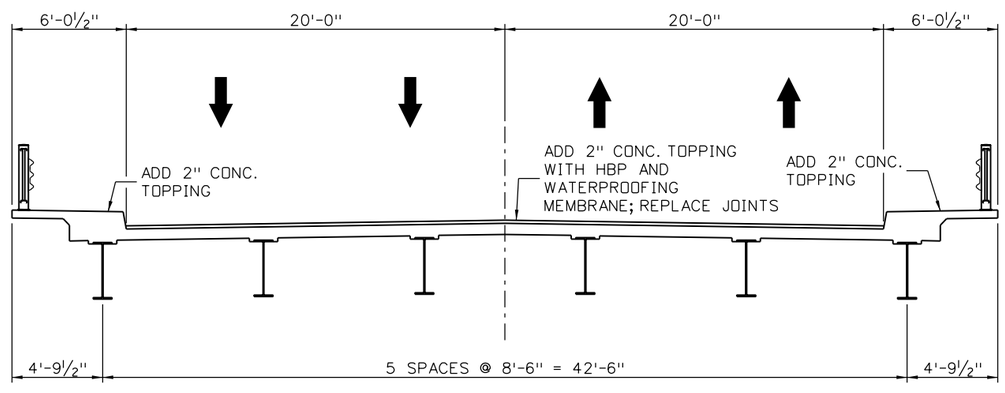

LEVEL B REHABILITATION TYPICAL SECTION

Print Date: 12/17/2012	Sheet Revisions	Colorado Department of Transportation	As Constructed
File Name: 19301BRDG_Mesa_TypSec02.dgn	Date: / Comments / Init.	902 Erie Avenue, Pueblo, CO 81001	No Revisions:
Horiz. Scale: 1:8 Vert. Scale:		Phone: 719-546-5438 FAX: 719-546-5702	Revised:
ATKINS 4601 DTC Boulevard, Suite 700, Denver, CO 80237, Phone: (303) 221-7275 Fax: (303) 221-7276		Region 2	Void:

MESA AVENUE OVER I-25 REHABILITATION LEVELS SUPERSTRUCTURE (SHEET 1 OF 2)			Project No./Code
Designer:	Structure Numbers	L-18-AU	
Detailer:			
Sheet Subset:	Subset Sheets: of		Sheet Number 4

22463 11:04:03 AM \\DENFS06\Trans\Tranproj\100031632 - R2 Rehab\19301\Consultants\Bridge\Drawings\19301BRDG_Mesa_TypSec02.dgn

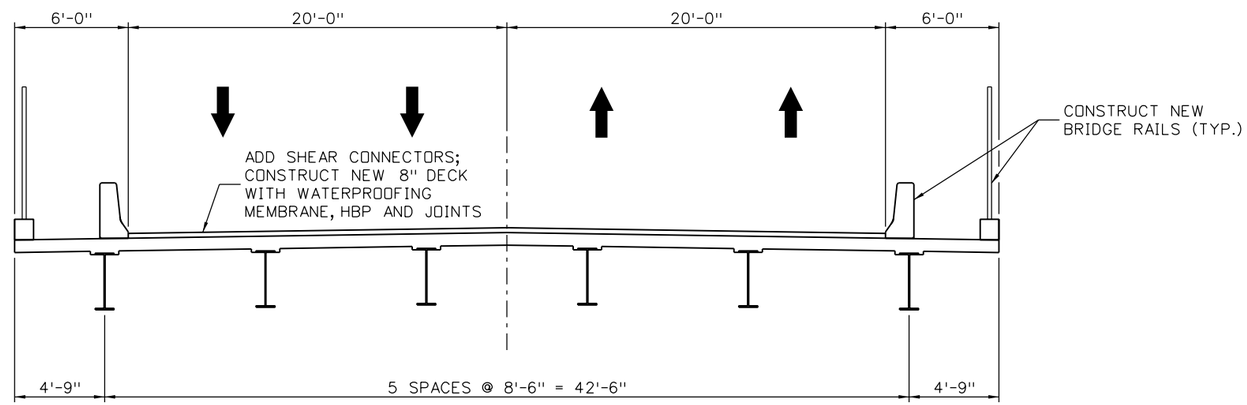

LEVEL C REHABILITATION TYPICAL SECTION

Print Date: 12/17/2012	Sheet Revisions	Colorado Department of Transportation	As Constructed
File Name: 19301BRDG_Mesa_TypSec03.dgn	Date: / Comments / Init.	902 Erie Avenue, Pueblo, CO 81001	No Revisions:
Horiz. Scale: 1:8 Vert. Scale:		Phone: 719-546-5438 FAX: 719-546-5702	Revised:
ATKINS 4601 DTC Boulevard, Suite 700, Denver, CO 80237, Phone: (303) 221-7275 Fax: (303) 221-7276		Region 2	Void:

MESA AVENUE OVER I-25 REHABILITATION LEVELS SUPERSTRUCTURE (SHEET 2 OF 2)		Project No./Code
Designer:	Structure Numbers L-18-AU	
Detailer:		
Sheet Subset:	Subset Sheets: of	Sheet Number 5

22463 11:04:09 AM \\DENFS06\Trans\Tranproj\100031632 - R2 Rehab\19301\Consultants\Bridge\Drawings\19301BRDG_Mesa_TypSec03.dgn

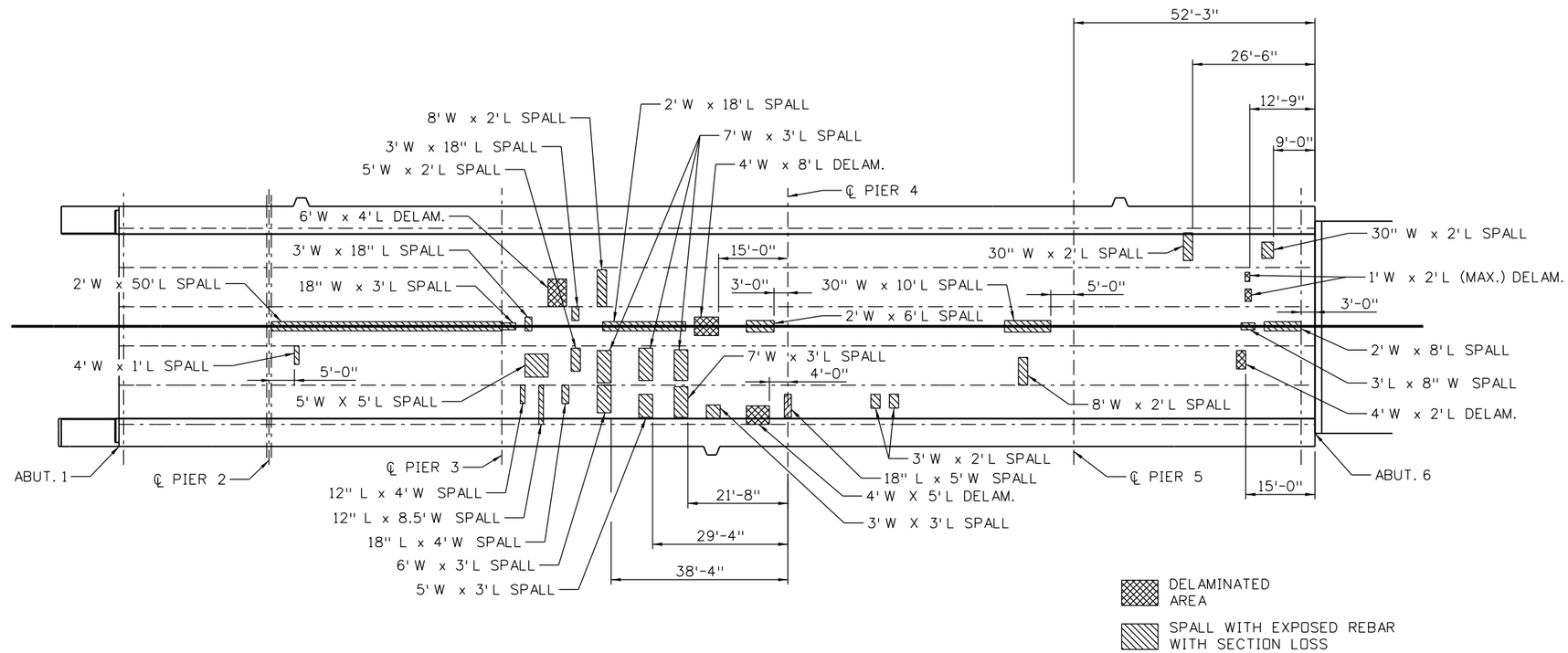

PLAN - BOTTOM OF DECK DEFICIENCIES

LEVEL A - MINIMUM REHABILITATION

1. USE PENETRATING CORROSION INHIBITOR TOP AND BOTTOM.
2. APPLY CONCRETE SEALER ON CURB AND SIDEWALK.
3. PATCH TOP OF THE CONCRETE DECK AND PROVIDE WATERPROOFING MEMBRANE AND HOT BITUMINOUS PAVEMENT (HBP).
4. NEW JOINT AT PIERS 2 & 4. PLUG JOINT AT ABUTMENTS.
5. PROVIDE 8-IN DRAIN PIPES ON EACH SIDE UPHILL FROM ABUTMENTS 1 & 6 JOINTS, PIER 2 & 4 JOINTS.
6. IT IS UNCERTAIN IF THE CONCRETE DECK WILL HAVE ANOTHER 30 YEARS OF SERVICE LIFE. A STAINLESS STEEL MESH ATTACHED BETWEEN GIRDERS OVER THE TRAFFIC LANES IS A FEASIBLE OPTION TO CATCH ANY FALLING CONCRETE.
7. W-BEAM ATTACHED TO RAIL (OPTIONAL THRIE-BEAM, TOPCOAT ALUMINIUM PAINT ON EXISTING RAIL). NOTE RAIL IS PROBABLY OUTSIDE THE CLEAR ZONE. SNAGGING CAN BE CORRECTED WITH A W OR THRIE-BEAM IN THE INSIDE FACE, AND EDGE PUNCHING BY AN ANGLE BETWEEN THE DECK AND BASEPLATE AT THE BACK (ONE LEG HORIZONTAL UNDER POSTS, ONE VERTICAL AT BACK OF POST).
8. OPTIONAL WASH AND TOPCOAT EXTERIOR GIRDERS ON SPAN 1.
9. PAINT THE DAMAGED PORTION OF THE DIAPHRAGMS AND BEARINGS AT PIERS 2 AND 4.

LEVEL B - INTERMEDIATE REHABILITATION

1. SAME AS LEVEL A, EXCEPT MILL TOP OF DECK, UP TO 20% CLASS 2 AND 3 REMOVAL, BEFORE APPLYING THE CORROSION INHIBITOR. ADD 2-IN OF DT CONCRETE WITH STAINLESS MESH BEFORE PLACING THE WATERPROOF MEMBRANE AND THE HBP.
2. TREAT THE CURB AND SIDEWALK WITH CORROSION INHIBITOR.
3. RESET RAIL WITH W OR THRIE-BEAM RAIL. ADD AN ANGLE UNDER POSTS TO SPREAD PUNCHING LOAD.
4. THIRTY YEAR LIFE OF DECK IS PROBABLE WITH THE 2-IN DT CONCRETE TOPPING. A STAINLESS STEEL MESH ATTACHED BETWEEN GIRDERS OVER THE TRAFFIC LANES IS A FEASIBLE OPTION TO CATCH ANY FALLING CONCRETE.
5. CONSIDER TOPCOAT PAINT ON REMAINDER OF EXTERIOR GIRDERS AND INTEGRAL TREATMENT OF PIER 2 UPPER DIAPHRAGM WEST SIDE.

LEVEL C - EXTENSIVE REHABILITATION

1. REMOVE AND REPLACE THE CONCRETE DECK.
2. ADD SHEAR CONNECTORS TO PROVIDE COMPOSITE ACTION BETWEEN THE GIRDERS AND THE CONCRETE DECK, WATERPROOF MEMBRANE AND HBP.
3. 8" DRAINS WITH BOX UPHILL FROM JOINT AT ABUTMENTS 1 & 6 AND PIERS 2 & 4.
4. PROVIDE NEW BRIDGE RAILS AND SHORT APPROACH SLABS AT ABUTMENT 6 TO MOVE LEAKAGE AWAY FROM ABUTMENT.
5. CONSIDER JOINT ELIMINATION AT PIER 2, ADD BEARING PAD AT ABUTMENT 1,
6. CONSIDER WASH AND TOPCOAT PAINT ON ALL GIRDERS AND DIAPHRAGMS AND INTEGRAL TREATMENT OF PIER 2 UPPER DIAPHRAGM.

Print Date: 12/17/2012
File Name: 19301BRDG_Mesa_SuperRepair01.dgn
Horiz. Scale: 1:30 Vert. Scale:

ATKINS
4601 DTC Boulevard, Suite 700
Denver, CO 80237
Phone: (303) 221-7275 Fax: (303) 221-7276

Sheet Revisions

Date:	Comments	Init.

Colorado Department of Transportation
DOT
DEPARTMENT OF TRANSPORTATION
902 Erie Avenue
Pueblo, CO 81001
Phone: 719-546-5438 FAX: 719-546-5702
Region 2

As Constructed
No Revisions:
Revised:
Void:

MESA AVENUE OVER I-25
SUPERSTRUCTURE REPAIRS

Designer:
Detailer:
Sheet Subset:
Structure Numbers L-18-AU
Subset Sheets: of

Project No./Code
Sheet Number 6

22463 11:04:12 AM \\DENFS06\Trans\Tranproj\100031632 - R2 Rehab\19301\Consultants\Bridge\Drawings\19301BRDG_Mesa_SuperRepair01.dgn

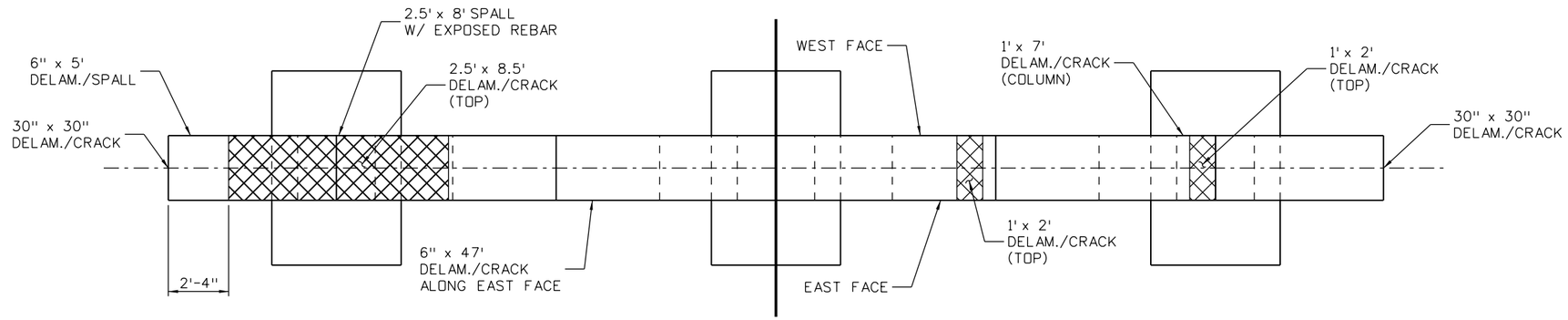

PIER 2 PLAN

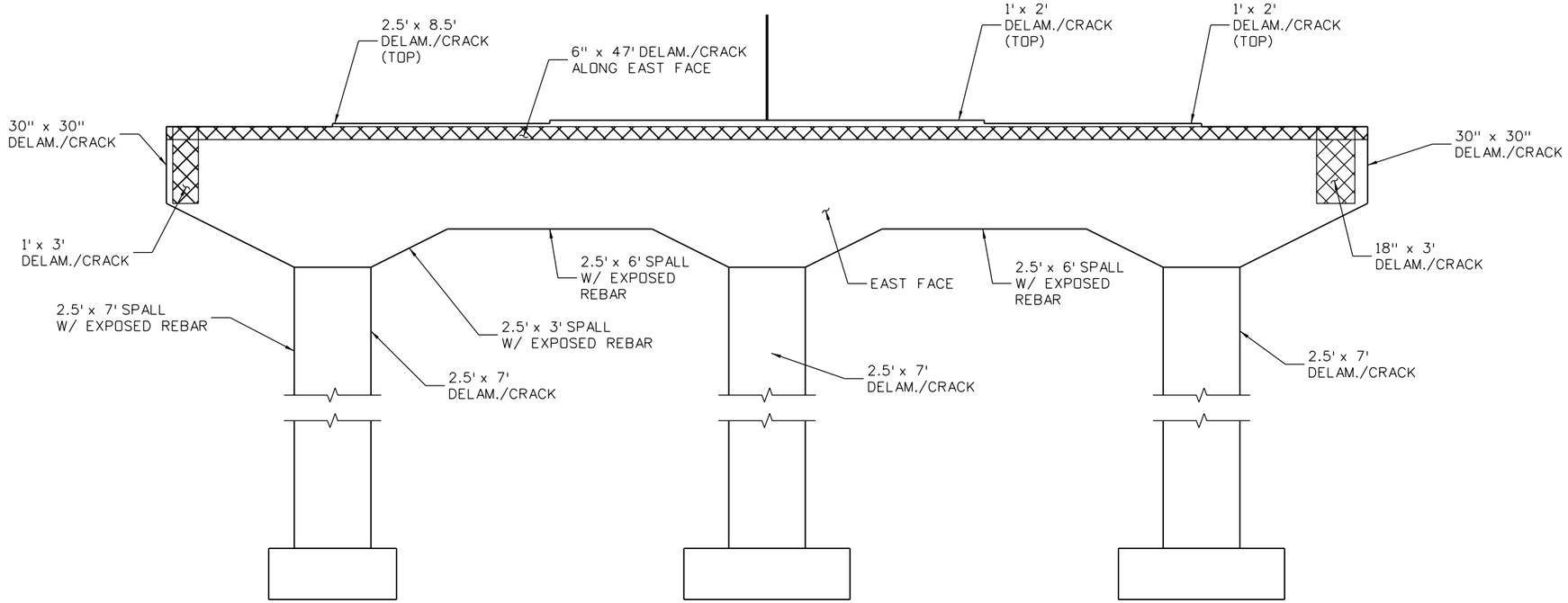

PIER 2 ELEVATION

LEVEL A - MINIMAL REHABILITATION

PIERS 2 & 4:
1. REMOVE ALL LOOSE AND DELAMINATED CONCRETE FROM THE CAP AND COLUMNS.
2. REPLACE REINFORCING WITH SIGNIFICANT SECTION LOSS.
3. TREAT THE PIER CAPS AND COLUMNS WITH CORROSION INHIBITOR AND CONCRETE SEALER.
4. ADD A REINFORCING CAGE AND ENCAPSULATE WITH 4-IN OF DT CONCRETE.

ABUTMENTS 1 & 6:
1. REMOVE ALL THE DELAMINATED CONCRETE.
2. REPLACE REINFORCING WITH SIGNIFICANT SECTION LOSS.
3. TREAT THE ABUTMENT CAP AND COLUMNS WITH CORROSION INHIBITOR AND CONCRETE SEALER.

LEVEL B - INTERMEDIATE REHABILITATION

PIERS 2 & 4:
1. REMOVE ALL LOOSE AND DELAMINATED CONCRETE FROM THE CAP AND COLUMNS.
2. REPLACE REINFORCING WITH SIGNIFICANT SECTION LOSS.
3. TREAT THE PIER CAPS AND COLUMNS WITH CORROSION INHIBITOR AND CONCRETE SEALER.
4. ADD A REINFORCING CAGE WITH STAINLESS STEEL WELDED WIRE FABRIC AND ENCAPSULATE WITH 4-IN OF DT CONCRETE.

ABUTMENTS 1 & 6:
1. REMOVE ALL THE DELAMINATED CONCRETE.
2. TREAT THE ABUTMENT CAP AND COLUMNS WITH CORROSION INHIBITOR AND WRAP THE REPAIRED PORTION WITH FRP AT ABUTMENT 6.

LEVEL C - EXTENSIVE REHABILITATION

PIERS 2 & 4:
1. REMOVE ALL LOOSE AND DELAMINATED CONCRETE FROM THE CAP AND COLUMNS.
2. REPLACE REINFORCING WITH SIGNIFICANT SECTION LOSS.
3. TREAT THE PIER CAPS AND COLUMNS WITH CORROSION INHIBITOR AND CONCRETE SEALER.
4. ADD A REINFORCING CAGE WITH STAINLESS STEEL WELDED WIRE FABRIC AND ENCAPSULATE WITH 4-IN OF DT CONCRETE.

ABUTMENTS 1 & 6:
1. REMOVE ALL THE DELAMINATED CONCRETE.
2. TREAT THE ABUTMENT CAP AND COLUMNS WITH CORROSION INHIBITOR AND WRAP THE REPAIRED PORTION WITH FRP AT ABUTMENT 6.

DELAMINATED AREA

Print Date: 12/17/2012	Sheet Revisions	Colorado Department of Transportation	As Constructed
File Name: 19301BRDG_Mesa_PierRepair01.dgn	Date: / Comments / Init.	902 Erie Avenue, Pueblo, CO 81001	No Revisions:
Horiz. Scale: 1:5.33333 Vert. Scale:		Phone: 719-546-5438 FAX: 719-546-5702	Revised:
ATKINS 4601 DTC Boulevard, Suite 700, Denver, CO 80237, Phone: (303) 221-7275 Fax: (303) 221-7276		Region 2	Void:

MESA AVENUE OVER I-25 SUBSTRUCTURE REPAIRS (SHEET 1 OF 2)		Project No./Code
Designer:	Structure Numbers L-18-AU	
Detailer:		
Sheet Subset:	Subset Sheets: of	Sheet Number 7

22463 11:04:14 AM \\DENFS06\Trans\Tranproj\100031632 - R2 Rehab\19301\Consultants\Bridge\Drawings\19301BRDG_Mesa_PierRepair01.dgn

CHAPTER 5

I-25 NB and SB over US 50 Business Bridges

(K-18-AX and K-18-AY)

5.1. Existing Bridge Condition

5.1.1. Description of Structure

The 232-ft long parallel bridges, built in 1958, consist of four spans, non-composite, wide flange steel girders, carrying I-25 traffic over US 50 Business (Santa Fe Avenue). The bridge piers and abutments have a skew of 54 degrees. The span lengths are 50'-0", 66'-0", 66'-0", and 50'-0" measured between centerline of bearings. The I-25 NB Bridge (K-18-AX) has a curb-to-curb width of 30-ft providing two traffic lanes, 3-ft shoulders, and traffic rails. The curb-to-curb width of the I-25 SB Bridge (K-18-AY) is 40-ft and carries three traffic lanes. The deck consists of cast-in-place concrete with an asphalt overlay.

Photo 5-1: I-25 NB over US 50 Business (K-18-AX) – Bridge Elevation

The spans are comprised of five continuous non-composite steel wide flange rolled girders, 33WF141, spaced at 7'-8 ½" for K-18-AX. K-18-AY has six continuous steel rolled girders. Inverted "K" Intermediate cross frames consisting of channel and angle members are located in all the Bays. The end cross frames parallel to the skew at the top of the pier cap consisting of wide flange girders and angles to form the inverted "K" cross frame. The spacing of the cross frames varies from 16'-8 1/2" to 30'-3 1/2" in a staggered pattern. Rocker bearings are present at the end of the girder units. The minimum vertical clearance is approximately 15.8-ft and 18.0-ft for the northbound and southbound bridges, respectively.

The reinforced concrete piers are composed of four square columns supported on individual pile supported footings. Abutments 1 and 5 are pile supported abutments with concrete slope pavement.

The annual average daily traffic (AADT) for each bridge was 30,650 vehicles, with 5% truck traffic, in 2007 and is projected to be 41,378 vehicles in 2027. The roadway functional classification is an urban interstate principal arterial system.

Photo 5-2: I-25 SB over US 50 Business (K-18-AY) – Bridge Elevation

General Layout, Framing Plan, and Typical Section drawings of the existing bridge are located in section 5.4.

5.1.2. Sufficiency, Condition, and Appraisal Rating Summary

The northbound and southbound bridges are classified as functionally obsolete and have sufficiency ratings of 49.7 and 60.5, respectively, based on the latest bridge inspection reports (see Table 1).

Bridge Name	Bridge Designation	Sufficiency Rating	Structurally Deficient?	Functionally Obsolete?	Deck (Item 58)	Superstructures (Item 59)	Substructures (Item 60)	Structural Condition (Item 67)	Deck Geometry (Item 68)	Underclearances (Item 69)	Waterway Adequacy (Item 71)	Approach Roadway Alignment (Item 72)
I-25 NB over US 50 Business (Santa Fe Ave.)	K-18-AX	49.7		YES	5	7	5	5	4	3	N	8
I-25 SB over US 50 Business (Santa Fe Ave.)	K-18-AY	60.5		YES	6	7	6	5	3	3	N	8

Structurally Deficient
1. A condition rating of 4 or less for
Item 58 - Deck or
Item 59 - Superstructures or
Item 60 - Substructures or
Item 62 - Culvert and Retaining Walls or
2. An appraisal of 2 or less for
Item 67 - Structural Condition or
Item 71 - Waterway Adequacy

Functionally Obsolete
1. An appraisal rating of 3 or less for
Item 68 - Deck Geometry or
Item 69 - Underclearances or
Item 72 - Approach Roadway Alignment or
2. An appraisal of 3 or less for
Item 67 - Structural Condition or
Item 71 - Waterway Adequacy

Any bridge classified as structurally deficient is excluded from the functionally obsolete category.

Table 5-1 Sufficiency, Condition, and Appraisal Rating Summary

The comprehensive evaluation of the condition ratings for the Deck (Item 58), Superstructure (Item 59), and Substructure (Item 60) dating back to the 1970s revealed that the deterioration rate of the bridge has been steady. The current deficiencies have been present as far as 20 years ago. A detailed matrix of the deterioration rate can be found in Appendix B.

5.1.3. Load Capacity Analysis

According to the 2010 bridge inspection report for K-18-AX Bridge, the operating and inventory ratings using load factor method were 39.0 and 23.4, respectively. The operating and inventory ratings using load factor method for the K-18-AY Bridge were 40.2 and 24.1, respectively.

Load rating analysis using the Load and Resistance Factor Rating (LRFR) method was performed on the structure to determine the load-carrying capacity of the bridge and the results are summarized below.

	Existing Bridge Condition		
Inventory	Ext. Girder Rating	Controlling Limit State	Location Span - (%)
	0.94	**Service II**	**3 - (59.1)**
	Int. Girder Rating	Controlling Limit State	Location Span - (%)
	1.13	**Strength I**	**2 - (100)**
Operating	Ext. Girder Rating	Controlling Limit State	Location Span - (%)
	1.22	**Service II**	**3 - (59.1)**
	Int. Girder Rating	Controlling Limit State	Location Span - (%)
	1.47	**Strength I**	**2 - (100)**
Permit	Ext. Girder Rating	Controlling Limit State	Location Span - (%)
	1.28	**Strength II**	**3 - (100)**
	Int. Girder Rating	Controlling Limit State	Location Span - (%)
	1.66	**Strength II**	**2 - (100)**

Table 5-3 Existing Condition Load and Resistance Factor Rating Summary for K-18-AX

	Existing Bridge Condition		
Inventory	Ext. Girder Rating	Controlling Limit State	Location Span - (%)
	0.77	**Strength I**	**2 - (100)**
	Int. Girder Rating	Controlling Limit State	
	1.16	**Strength I**	**3 - (0)**
Operating	Ext. Girder Rating	Controlling Limit State	
	1.00	**Strength I**	**2 - (100)**
	Int. Girder Rating	Controlling Limit State	
	1.51	**Strength I**	**3 - (0)**
Permit	Ext. Girder Rating	Controlling Limit State	
	0.79	**Strength II**	**3 - (100)**
	Int. Girder Rating	Controlling Limit State	
	1.71	**Strength II**	**3 - (0)**

Table 5-3 Existing Condition Load and Resistance Factor Rating Summary for K-18-AY

5.2. Structural Assessment Findings

I-25 NB over US 50 Business (K-18-AX)

A visual assessment of the bridge showed typical corrosion damage of the cross frame members and steel rolled girders over the piers associated with the deficiencies in deck. The bridges were built with

construction joints over all the piers. Hence, most of the structural damages are at the top of the pier cap and the steel diaphragms.

The existing bridge rails had some cracks at the top and face of the curb. Exposed reinforcement was visible on the back of the curb near Abutment 5.

The underside of the deck had spalls and delaminated areas with exposed and rusted reinforcing bars. The concrete deck slab damage is mostly at the deck joints. Superficial transverse cracks were visible in a few locations. Based on previous inspection reports, the deck bottom deterioration has been present for at least the last two decades with very little change over time. The bottom of deck appeared sound with some scaling and efflorescence. Moisture build-up at the bearings was visible at the time of the inspection coming from the deck underside.

The deterioration of the steel girders and diaphragms is related to the leaking deck joints over the piers. Scattered paint peels and primer along the girder length were visible. Span 2 of bridge K-18-AX showed bottom flange deflection and section loss due to overhead hits.

The pier caps exhibited concrete section loss exposing the longitudinal reinforcing bars and stirrups. The deterioration and damage is due to the water leaks from the deck.

I-25 SB over US 50 Business (K-18-AY)

This is a parallel structure to K-18-AX which is similar but narrower. The structural condition of this structure is slightly better by the inspection ratings of the deck and substructure, but it is deteriorating just like K-18-AX, in particular the pier caps which have moved down in the latest inspection to a point slightly poorer than the adjacent structure. The deck soffit is also slightly better than K-18-AX. However, the deck geometry is worse than K-18-AX since it has a merging on-ramp acceleration lane merging to the mainline traffic.

This bridge had the same deterioration to the deck underside, pier cap, steel girder, and diaphragms associated with the open deck joints.

5.2.2. Superstructure

Deck

The top of the deck appeared in good condition. There were some superficial tracks on the asphalt overlay.

Photo D-1: South looking North.

Photo D-2: Transverse crack near Abutment 5.

I-25 NB over US 50 Business (K-18-AX)

The underside of the deck slab near Pier 3 was inspected near Pier 3 during the bucket truck inspection. Deficiencies include few cracks, delamination and spalls. Most of the deficiencies were found near and above pier 3. A few delaminations were found at the concrete buildup over the steel cross frame just above pier cap. The delamination with corrosion stains leaking out can be seen as shown in photo D1-1 and delamination with water leak through from top deck at the cross frame as shown in photos D1-2 and D1-3. Spalls with exposed reinforcement were also found at the underside deck slab over the steel cross frame (See photo D1-4). The deck underside of Span 2 had a few crack and delamination as shown in photo D1-5. Spalls with exposed reinforcement were found in Bay 3D near Pier 4 (See photo D1-6), and in Bay 4A near Abutment 5 (See photo D1-7).

Photo D1-1: Delamination with corrosion leak out at girder 3D, Bay 3D - Pier 3.

Photo D1-2: Delamination with water leak through from top deck at girder 3A, Bay 3A - Pier 3.

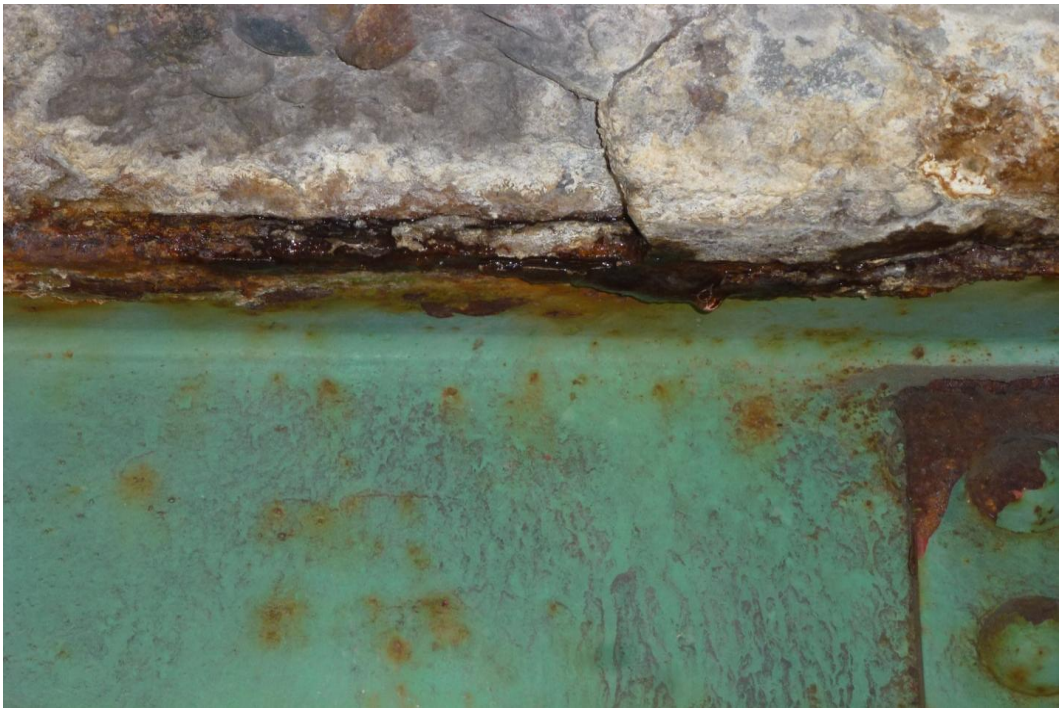

Photo D1-3: Delamination with water leak through from top deck at girder 3A, Bay 3A - Pier 3.

Photo D1-4: Delamination and spalls with exposed reinforcement near girder 3D, Bay 3C – Pier 3.

Photo D1-5: Underside deck slab at Span 2 – North looking South.

Photo D1-6: Spalls at deck underside in Bay 3D near Pier 4.

Photo D1-7: Spalls with exposed reinforcement in Bay 4A near Abutment 5.

I-25 SB over US 50 Business (K-18-AY)

The deck slab underside had a few deficiencies within the area near pier 3 during the bucket truck inspection at the top of pier cap. A few delaminations and spalls were found at the concrete buildup over the steel cross frame just above the pier cap as seen in photo D2-1 and D2-2. There were spalls with exposed reinforcement at the deck underside in Bay 3E and a large spalls area at the underside deck overhang with corroded reinforcement as seen in photos D2-3 and D2-4, respectively. Crack and delamination at the underside of the deck overhang with water leaking through from top deck had occurred at the time of inspection as seen in photo D2-5. One other location with water leak through was also found in Bay 3E near girder 3E (See photo D2-6).

Photo D2-1: Delamination at deck underside near girder 3E, Bay 3E – Pier 3.

Photo D2-2: Spalls at deck underside and corrosion at top flange of cross frame in Bay 3B.

Photo D2-3: Spalls with exposed reinforcement at deck underside in Bay 3E, approximated 2in x 1ft x 3ft.

Photo D2-4: Spalls (2in x 2ft x 5ft) with corroded reinforcement at overhang deck underside – Pier 3.

Photo D2-5: Crack / delamination at overhang deck underside with water leak through from top slab.

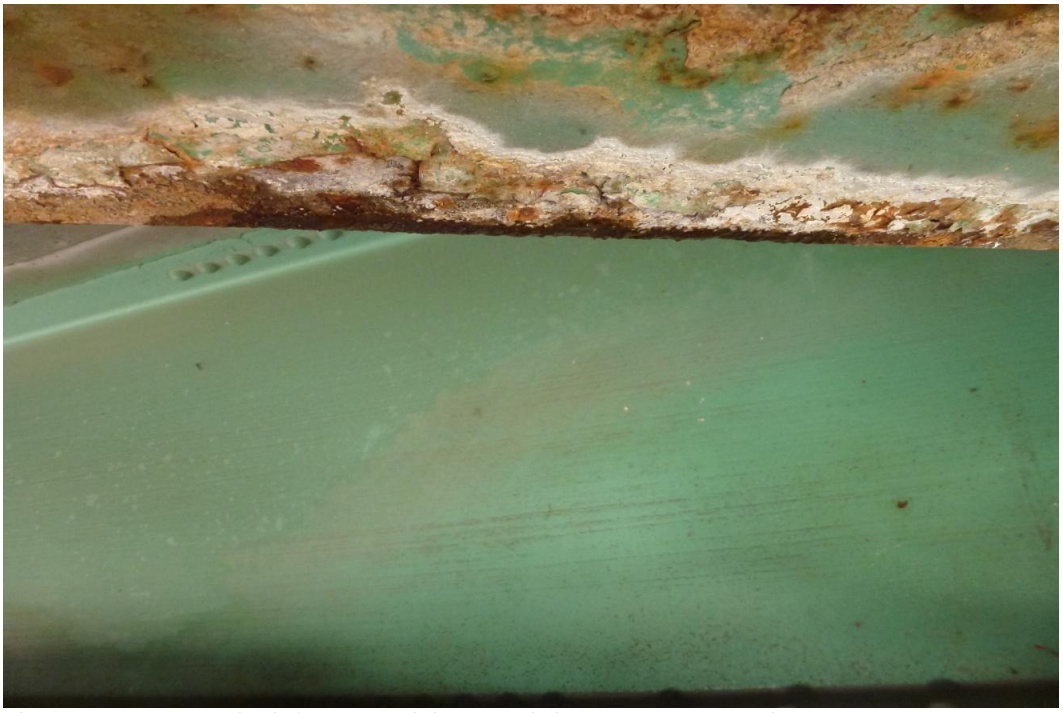

Photo D2-6: Water leak from top slab near girder 3F, Bay 3E – Pier 3.

Bridge Rail

I-25 NB over US 50 Business (K-18-AX)

Bridge rails on both side of deck were in a good condition.

Photo R1-1: Bridge railings – South looking North.

Photo R1-2: Bridge rail – West looking East.

I-25 SB over US 50 Business (K-18-AY)

Railings on both side of the bridge were in a good condition and the overall view of bridge rails can be seen in photo R1-1.

Photo R1-1: Bridge railing – North looking South.

Photo R1-2: Bent in bottom rail at Spans 3 and 4.

Curb/Sidewalk

Photo CS-2: Minor cracks

Girders

I-25 NB over US 50 Business (K-18-AX)

All girder ends and connections over Pier 3 appeared to be in good shape with no signs of section loss. There were a few minor corrosions at the connection plate and at the top and bottom flanges of the steel girder as shown in photos S1-1 and S1-2. A few scattered peeling paint and primer showing through occurred in some areas along the girder.

Photo S1-1: Corrosion at bottom flange and connection at underside girder 3A.

Photo S1-2: Corrosion at top and bottom flange at girder 3A, North face.

Photo S1-3: Damage bottom flange at girder 2E.

Cross Frame – Over Pier 3: The cross frame between girders at Pier 3 were inspected during the bucket truck inspection. Most of the cross frame were found with corroded at both top and bottom flanges as seen in some of the previous photos of this report as D1-2 and D1-4 as well as those photos C1-1, C1-2 and C1-3 below. Also there were a few scattered peeling paint and primer showing through.

Photo C1-1: Corrosion at top and bottom flange of cross frame between girders 3B and 3C above Pier 3.

Photo C1-2: Corrosion at top and bottom flange of cross frame near girder 3B in Bay 3A above Pier 3.

Photo C1-3: Corrosion at top and bottom flange at cross frame between girders 3E and 3D over Pier 3.

I-25 SB over US 50 Business (K-18-AY)

All girders and connections near Pier 3 appeared to be in good condition, but there were a few locations where top flange had minor corrosion as seen at photo S2-1 and S2-2. A few scattered peeling paint and primer showing through also occurred in some areas along the girder.

Photo S2-1: Minor corrosion at top flange of girder 3A – Pier 3.

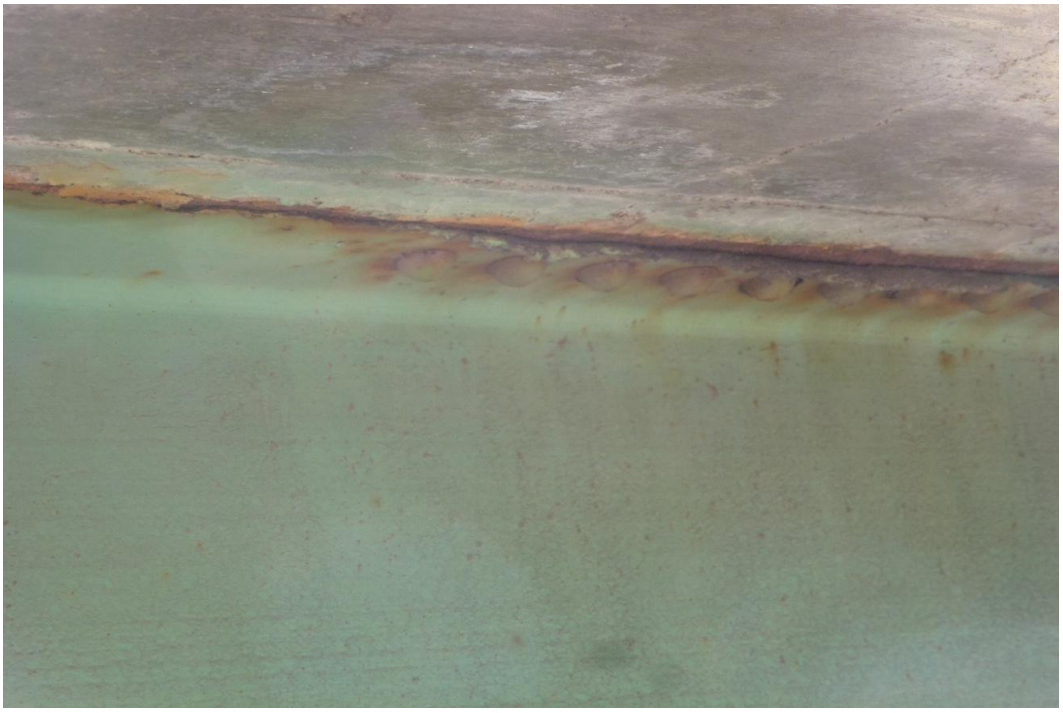

Photo S2-2: Minor corrosion at top flange of girder 3A – Pier 3.

Cross Frame (At Pier 3)

The cross frame between girders 3E and 3F in Bay 3E had corroded at the top and bottom flanges (See photo C2-1). Same for the other cross frame location between girders along pier 3, most of them had been corroded at top and bottom flanges as seen in photos C2-2, C2-3 and C2-4. Also there were a few scattered peeling paint and primer showing through.

Photo C2-1: Corrosion at top and bottom flanges of cross frame in Bay 3E – Pier 3.

Photo C2-2: Corrosion at top and bottom flanges of cross frame between girders 3D and 3C – Pier 3.

Photo C2-3: Corrosion at top flange of cross frame in Bay 3B – Pier 3.

Photo C2-4: Corrosion at top and bottom flanges of cross frame in Bay 3A – Pier 3.

Expansion Joints

I-25 NB over US 50 Business (K-18-AX)

Asphaltic material was placed over expansion joint at both abutment and it appeared to be in a good condition as seen in photo E-1 below. There were some small cracks occurred at edge of asphaltic material.

Photo E-1: Expansion joint at abutment 5.

Photo E-2: Expansion joint at abutment 1.

I-25 SB over US 50 Business (K-18-AY)

Asphaltic material was placed over expansion joint at both abutment and it appeared to be in a good condition as seen in photo E-1 below.

Photo E-1: Expansion joint at abutment 5.

5.2.2. Substructure

Bearings

I-25 NB over US 50 Business (K-18-AX)

All bearing plates at Pier 3 were in a good condition. Bearing connection at girder 3E with nut was not tighten to the base plate as seen in photo B1-1.

Photo B1-1: Nut was not tighten to bearing plate at girder 3E.

Photo B1-2: Bearing at abutment 1.

Photo B1-3: Bearing at abutment 5.

I-25 SB over US 50 Business (K-18-AY)

All bearings included bearing plates and connections at Pier 3 were in good condition.

Piers

I-25 NB over US 50 Business (K-18-AX)

Pier 3 – Cap
The concrete pier cap was inspected starting from the South to the North of Pier 3 (or from girder 3E to girder 3A). Overall inspection of pier cap was found with moderate cracks, spalls and delaminations present but did not appear to have a significant effect to the strength and/or serviceability of either the pier element or the bridge. There were a few delamination along the East face of top pier cap (See photo P3-1 and P3-2). Spalls with exposed reinforcement at the South face of pier cap (See photo P3-3) and few others small spalls at top pier cap. A few cracks also were found at various locations at top and face of pier cap.

Photo P3-1: Delamination along East face of pier cap near Column A, approximated 8ft.

Photo P3-2: Delamination at top pier cap at Bay 3B, approximated 4ft in length.

Photo P3-3: Spalls with exposed reinforcement at North face of pier cap.

I-25 SB over US 50 Business (K-18-AY)

Pier 3 – Cap
The concrete pier cap was inspected starting from the South to the North of Pier 3 (or from girder 3F to girder 3A). Overall inspection of the pier cap found moderate cracks, spalls, and delaminations present but do not appear to have a significant effect to the strength and/or serviceability of either the pier element or the bridge. There were a few delamination along the East face of top pier cap (See photo P3-1 and P3-2) and a few longitudinal cracks at the face of pier cap (P3-3). Also there was spalls with exposed reinforcement at the South face of the pier cap. Spalls (delamination) with exposed corroded reinforcement was also found at the South face of the pier cap (See photo P3-4).

Photo P3-1: Delamination along the East face of pier cap.

Photo P3-2: Delamination at East face of pier cap between girder 3A and 3B.

Photo P3-3: Small crack at East face of pier cap near girder 3C.

Photo P3-4: Delamination and spalls with exposed reinforcement at East face of end cap.

Abutments

Abutments appeared to be in good condition with no signs of cracks or extensive damage.

Photo A1-1: Abutment 1 - North looking South.

Photo A1-2: Abutment 1 – Bridge K-18-AX

Photo A1-3: Abutment 1 – Bridge K-18-AY.

Retaining Walls

Retaining walls appeared to be in good condition with no signs of cracks or extensive damage.

Photo W-1: Abutment 1 Retaining wall between bridges

5.3 Rehabilitation Alternatives

5.3.1. Rehabilitation Alternatives

Widening to the inside of the bridges is necessary in order to provide adequate space for rehabilitation of these bridges. The closed median will be use to shift K-18-AX traffic over in order to facilitate repair work. The widening will require the removal of the inside curbs, provide new girder lines and substructure components.

Level A - Minimal Rehabilitation

Structurally Deficient or Functionally Obsolete Evaluation

- For K-18-AX, the low under clearance rating (FO) can be corrected by moving the west sidewalk behind the pier columns.
- For K-18-AX, the vertical clearance can be improved by adjusting the roadway vertical profile of Santa Fe Avenue southbound by about 1-ft.
- Lateral under clearance (both Santa Fe Avenue roads) correction will depend on the truss bridge (US 50 Business EB over Arkansas River) located about south of the twin bridges.
- Close the median and connect to the adjacent bridge (K-18-AY) to clear deck geometry issues and provide adequate space during the rehabilitation of the bridge.

Superstructure

- Use penetrating corrosion inhibitor top and bottom of the deck.
- Remove 3-ft minimum strip at the pier joints and provide reinforcement to lap existing steel. Patch the strip to match the existing deck.
- Apply corrosion inhibitor and concrete sealer on curb.
- Patch top of the concrete deck and provide waterproofing membrane and Hot Bituminous Pavement (HBP).
- Optional wash and paint all girders using encapsulating paint for the areas classified as CS3 in the inspection reports. The wash and painting also apply to the diaphragms and bearings.
- For K-18-AX, repair the damage at the bottom by providing cover plates in order to restore the full girder capacity. Topcoat paint will be used for the repair section.

Substructure

- Remove all loose and delaminated concrete from the caps and columns.
- Replace reinforcing with significant section loss.
- Treat the pier caps and columns with corrosion inhibitor and concrete sealer.
- Add a reinforcing cage and encapsulate with 4-in of DT concrete.

Level B - Intermediate Rehabilitation

Structurally Deficient or Functionally Obsolete Evaluation

- For K-18-AX, the low under clearance rating (FO) can be corrected by moving the west sidewalk behind the pier columns.
- For K-18-AX, the vertical clearance can be improved by adjusting the roadway vertical profile of Santa Fe Avenue southbound by about 1-ft.

- Lateral under clearance (both Santa Fe Avenue roads) correction will depend on the truss bridge (US 50 Business EB over Arkansas River) located about south of the twin bridges.
- Close the median and connect to the adjacent bridge (K-18-AY) to clear deck geometry issues and provide adequate space during the rehabilitation of the bridge.

Superstructure

- Remove asphalt with Class 1 removal on entire deck, except in areas needing Class 2 and 3 removals, before applying the corrosion inhibitor. Add 2-in of Concrete Class DT (Deck Topping) with stainless mesh (including cur) before placing the waterproof membrane and the HBP.
- Treat the curbs with corrosion inhibitor.
- Consider topcoat paint on remainder of exterior girders.
- Add intermediate diaphragms near the supports to increase the capacity of the girder.

Substructure

- Remove all loose and delaminated concrete from the cap and columns.
- Replace reinforcing with significant section loss.
- Treat the pier caps and columns with corrosion inhibitor and concrete sealer.
- Add a reinforcing cage and encapsulate with 4-in of DT concrete.
- Wrap the severe patched caps with FRP.

Level C - Extensive Rehabilitation

Structurally Deficient or Functionally Obsolete Evaluation

- For K-18-AX, the low under clearance rating (FO) can be corrected by moving the west sidewalk behind the pier columns.
- For K-18-AX, the vertical clearance can be improved by adjusting the roadway vertical profile of Santa Fe Avenue southbound by about 1-ft.
- Lateral under clearance (both Santa Fe Avenue roads) correction will depend on the truss bridge (US 50 Business EB over Arkansas River) located about south of the twin bridges.
- Close the median and connect to the adjacent bridge (K-18-AY) to clear deck geometry issues and provide adequate space during the rehabilitation of the bridge.

Superstructure

- Remove and replace the concrete deck.
- Add shear connectors to provide composite action between the girders and the concrete deck, waterproof membrane and HBP.
- Replace the bridge rails.
- Provide new approach slabs with expansion joints at the ends.
- Consider topcoat paint on remainder of exterior girders and diaphragms.
- Add intermediate diaphragms near the supports to increase the capacity of the girder.

Substructure

- Remove all loose and delaminated concrete from the cap and columns.
- Replace reinforcing with significant section loss.
- Treat the pier caps and columns with corrosion inhibitor and concrete sealer.
- Add a reinforcing cage and encapsulate with 4-in of DT concrete.
- Wrap the pier columns and caps with FRP.

5.3.2. Load Capacity Analysis of Rehabilitation Alternatives

Load capacity analyses using LRFR method were evaluated for each of the rehabilitation alternatives with the following consideration:

Level A – Minimum Rehabilitation
The inventory rating shall be at least 0.77 HL93 on a strength basis. The permit vehicle shall be evaluated to carry a single lane mixed with traffic with 20% impact.

Level B – Intermediate Rehabilitation
The inventory rating shall be at least 0.85 HL93 on strength basis. The permit vehicle shall be evaluated to carry a single lane mixed with traffic with 20% impact. Exterior girder may be evaluated as single trip mixed with traffic basis for those bridges with shoulders.

Level C – Extensive Rehabilitation
The inventory rating shall be at least 0.95 HL93 on strength basis. The permit vehicle shall be evaluated to carry a single lane mixed with traffic with 20% impact. Exterior girder may be evaluated as single trip mixed with traffic basis for those bridges with shoulders.

Below table is a summary of the rating values for each alternative:

I-25 NB over US 50 Business (K-18-AX)

	Level A Rehabilitation		
Inventory	Ext. Girder Rating	Controlling Limit State	Location Span - (%)
	1.28	**Strength I**	**2 - (100)**
	Int. Girder Rating	Controlling Limit State	Location Span - (%)
	1.21	**Service II**	**2 - (50)**
Operating	Ext. Girder Rating	Controlling Limit State	Location Span - (%)
	1.66	**Strength I**	**2 - (100)**
	Int. Girder Rating	Controlling Limit State	Location Span - (%)
	1.57	**Service II**	**2 - (50)**
Permit	Ext. Girder Rating	Controlling Limit State	Location Span - (%)
	1.70	**Strength II**	**2 - (100)**
	Int. Girder Rating	Controlling Limit State	Location Span - (%)
	1.83	**Strength II**	**3 - (0)**
	Level B Rehabilitation		
Inventory	Ext. Girder Rating	Controlling Limit State	Location Span - (%)
	0.87	**Service II**	**2 - (92)**
	Int. Girder Rating	Controlling Limit State	Location Span - (%)
	1.08	**Strength I**	**3 - (0)**
Operating	Ext. Girder Rating	Controlling Limit State	Location Span - (%)
	1.13	**Service II**	**2 - (92)**
	Int. Girder Rating	Controlling Limit State	Location Span - (%)
	1.40	**Strength I**	**3 - (0)**
Permit	Ext. Girder Rating	Controlling Limit State	Location Span - (%)
	1.02	**Strength II**	**2 - (92)**

	Int. Girder Rating	Controlling Limit State	Location Span - (%)
	1.59	**Strength II**	**3 - (0)**
	Level C Rehabilitation		
Inventory	Ext. Girder Rating	Controlling Limit State	Location Span - (%)
	0.97	**Strength I**	**2 - (100)**
	Int. Girder Rating	Controlling Limit State	Location Span - (%)
	1.32	**Strength I**	**2 - (100)**
Operating	Ext. Girder Rating	Controlling Limit State	Location Span - (%)
	1.26	**Strength I**	**2 - (100)**
	Int. Girder Rating	Controlling Limit State	Location Span - (%)
	1.71	**Strength I**	**2 - (100)**
Permit	Ext. Girder Rating	Controlling Limit State	Location Span - (%)
	1.04	**Strength II**	**2 - (100)**
	Int. Girder Rating	Controlling Limit State	Location Span - (%)
	1.94	**Strength II**	**2 - (100)**

I-25 SB over US 50 Business (K-18-AY)

	Level A Rehabilitation		
Inventory	Ext. Girder Rating	Controlling Limit State	Location Span - (%)
	0.84	**Strength I**	**3 - (0)**
	Int. Girder Rating	Controlling Limit State	Location Span - (%)
	1.21	**Service II**	**2 - (50)**
Operating	Ext. Girder Rating	Controlling Limit State	Location Span - (%)
	1.09	**Strength I**	**3 - (0)**
	Int. Girder Rating	Controlling Limit State	Location Span - (%)
	1.57	**Service II**	**2 - (50)**
Permit	Ext. Girder Rating	Controlling Limit State	Location Span - (%)
	0.85	**Strength II**	**3- (100)**
	Int. Girder Rating	Controlling Limit State	Location Span - (%)
	1.83	**Strength II**	**3 - (0)**
	Level B Rehabilitation		
Inventory	Ext. Girder Rating	Controlling Limit State	Location Span - (%)
	0.85	**Service II**	**3 - (8)**
	Int. Girder Rating	Controlling Limit State	Location Span - (%)
	1.10	**Strength I**	**3 - (0)**
Operating	Ext. Girder Rating	Controlling Limit State	Location Span - (%)
	1.11	**Service II**	**3 - (8)**
	Int. Girder Rating	Controlling Limit State	Location Span - (%)
	1.42	**Strength I**	**3 - (0)**
Permit	Ext. Girder Rating	Controlling Limit State	Location Span - (%)
	1.01	**Strength II**	**3 - (8)**

	Int. Girder Rating	Controlling Limit State	Location Span - (%)
	1.61	**Strength II**	**3 - (0)**
	Level C Rehabilitation		
Inventory	Ext. Girder Rating	Controlling Limit State	Location Span - (%)
	0.95	**Strength I**	**3 - (0)**
	Int. Girder Rating	Controlling Limit State	Location Span - (%)
	1.08	**Strength I**	**3 - (0)**
Operating	Ext. Girder Rating	Controlling Limit State	Location Span - (%)
	1.23	**Strength I**	**3 - (0)**
	Int. Girder Rating	Controlling Limit State	Location Span - (%)
	1.40	**Strength I**	**3 - (0)**
Permit	Ext. Girder Rating	Controlling Limit State	Location Span - (%)
	1.02	**Strength II**	**3 - (100)**
	Int. Girder Rating	Controlling Limit State	Location Span - (%)
	1.59	**Strength II**	**3 - (0)**

The inventory ratings above passed the LRFR rating criteria specified for this project because Service II is the controlling limit state. The rating values for the Strength I limit states are higher for these type of wide flange rolled compact steel sections.

5.3.3. Quantities/Cost Estimates

The probable construction costs associated with each rehabilitation alternative and replacement were evaluated. The cost/SF/yr is based on the life expectancy of the level of rehabilitation. The life expectancy for Rehabilitation Levels A, B, C, and replacement options are 20, 30, 50, and 75 years, respectively. Below is a summary of the estimated costs for each alternative.

I-25 NB over US 50 Business (K-18-AX)

Level A Rehabilitation			***Level B Rehabilitation***		
Cost	Cost/SF	Cost/SF/yr	Cost	Cost/SF	Cost/SF/yr
$891,023	**$64.70**	**$3.24**	**$1,213,744**	**$88.14**	**$2.94**

Level C Rehabilitation			***Replacement***		
Cost	Cost/SF	Cost/SF/yr	Cost	Cost/SF	Cost/SF/yr
$1,656,563	**$117.23**	**$2.34**	**$2,096,282**	**$142.12**	**$1.89**

I-25 SB over US 50 Business (K-18-AY)

Level A Rehabilitation			***Level B Rehabilitation***		
Cost	Cost/SF	Cost/SF/yr	Cost	Cost/SF	Cost/SF/yr
$375,999	**$38.76**	**$1.94**	**$626,973**	**$64.64**	**$2.15**

Level C Rehabilitation			***Replacement***		
Cost	Cost/SF	Cost/SF/yr	Cost	Cost/SF	Cost/SF/yr
$915,296	**$94.36**	**$1.89**	**$1,437,432**	**$138.55**	**$1.85**

A summary of the quantities used to determine the probable construction cost for each alternative are located in the Appendix C.

5.3.4. Rehabilitation Alternative Evaluation

Potential Risk and Other Factors

Rehabilitation criteria categories may not be clear cut, but longer life increases the benefit of greater functionality. A longer life provides a greater opportunity to recover the costs of a more extensive rehabilitation with reduced maintenance and deferred replacement expenses. Skipping one of the criteria may introduce a greater risk of a structure becoming dysfunctional over time.

Justifiable costs are based on rough equity to new bridge costs in 2012 prorated over the target life. Sometimes rehabilitation is justified on the simple basis that a replacement is impractical or something needs to be done fairly immediately at the time the evaluation for improvement is made. Rehabilitation may also be justified if some form of needed corridor change in the foreseeable future will make a new structure, or extensively rehabilitated structure obsolete before its time.

A bridge can be “poor” as indicated by the sufficiency rating of FO or SD for 10 or more years yet continue to function effectively depending on many factors. A deck with a condition rating of 4 may not present any operational problems, but indicates it is deteriorating towards condition rating 3 which will almost certainly have significant operational and maintenance problems. For example, bridge decks are

usually given a condition rating of 4 and classified as structurally deficient when there is significant evidence of delamination and reinforcing corrosion. Delamination alone has several risks:

- **Potholes in the surfacing**

  Potholes in the surface can be mitigated by a relatively thick bonded concrete topping (not patching) and/or an HBP overlay which can slow the development of pop-outs in the surfacing if not placed over broken-up or loose material. Heavy traffic tends to break up additional delamination quickly, while thicker topping and lighter traffic tends to have slower deterioration. Quality of the topping bond tends to retard deterioration. One mechanism for added potholes to form is the same as on roadway pavement: freezing water tapped within the pavement. Good drainage, dense waterproof topping materials and an absence of loose or porous material under the topping will reduce freezing-induced pop-outs. Every effort should be made to not trap porous material under the topping.

- **Falling concrete**

  Falling concrete can be mitigated by some sort of catcher. Note the risk associated with falling concrete may be more perceptual than significant as the result is seldom worse that it is with other debris in the road. Falling concrete may not be as significant risk as rock fall, which is tolerated as a risk.

- **Holes entirely through the deck**

  Holes entirely through the deck have a similar risk profile and mitigations to prevent potholes as potholes in the surfacing and falling concrete combined. If the reinforcing is still intact, the issue is that repair is an emergency situation. If the reinforcing is not intact the consequences to a vehicle can be more significant.

There are other risks that should be considered for rehabilitations with a significant expected life. Some of these risks may not be a priority due to lack of a prior problem with the particular structure and with similar structures. This may be sufficient to indicate the risk is somewhat low over the time periods the structure has been in service. These risks include the following:

- **Collision**

  Collision by trucks and trains is a significant cause of structure collapse. Risk tends to decrease with increasing clear zone and with increasing member strength. Many structures have sufficient redundancy to resist collapse with a member failure.

- **Earthquake**

  Earthquakes are not generally a problem in Colorado, but all structures should have the superstructure effectively connected to the substructure, or sufficiently lap over the seat. Rockers under simple span ends are a high risk element (also for scour and collision), unless motions are effectively limited.

- **Overloading**

  Generally, HL93 strength operating capacity evaluated with realistic ADTT and other adjustment factors will provide a low risk of loading beyond design limits. In Colorado the permit vehicle also provides a check against an errant legal permitted vehicle causing damage.

- **Brittle Fracture**

  Many structures have a risk of brittle fracture, especially those with older steel. Built-up riveted structures normally have cracks stop at rivet holes, limiting strength loss. Wide-flange rolled structures are susceptible to brittle fracture, if they are from the pre-Charpy testing era and should be checked for sufficient redundancy (four or more parallel members if simple span). Concrete pier caps may be a problem, but if integral with two or more columns supporting a superstructure with redundancy, there is probably not a brittle collapse issue. If seemingly subject to brittle fracture, structures can be checked with plastic analysis (probably assuming one lane of HL93 or a permit vehicle and a load factor of 1.1 for DL and LL) with a member failed to a pinned condition at the assumed brittle fracture location.

5.3.5. Recommendations

Given the information presented in this chapter, it is recommended that I-25 NB over US 50 Business (K-18-AX) follow Level B rehabilitation option which consists of intermediate rehabilitation to the superstructure and substructure components. The cost estimates and load capacity meet the Level B rehabilitation criteria established in this report. The high cost for the rehabilitation of this bridge is associated with the cost of widening the bridge to the inside in order to close the median. The median closure is needed In order to facilitate staging the traffic around the work zone for both bridges and provide standard width and shoulders for both structures. Another big portion of the cost had to do with the large amount of substructure construction with significant skews. The remaining functional obsolete (FO) classification can be corrected by moving the Santa Ave. SB sidewalk outside the pier columns or re-striping to a single lane.

I-25 SB over US 50 Business (K-18-AY) has a better condition rating for the deck. Therefore, it is recommended that this bridge follow Level A rehabilitation option which consists of minimal rehabilitation to the superstructure and substructure components.

The correction of the problems mentioned in the report, addition of preservation measures, and better condition of K-18-AY should provide about 30 years of additional life. Note, the traffic projections for 2027 for these two structures appear to indicate a need for more lanes.

5.4. Conceptual Plans

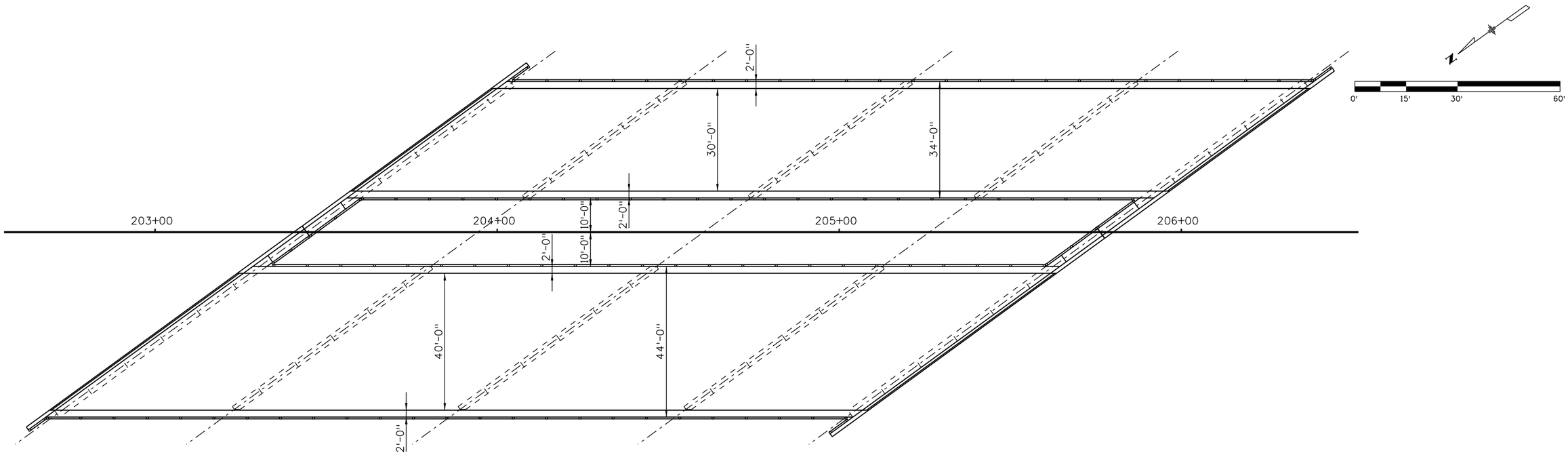

PLAN

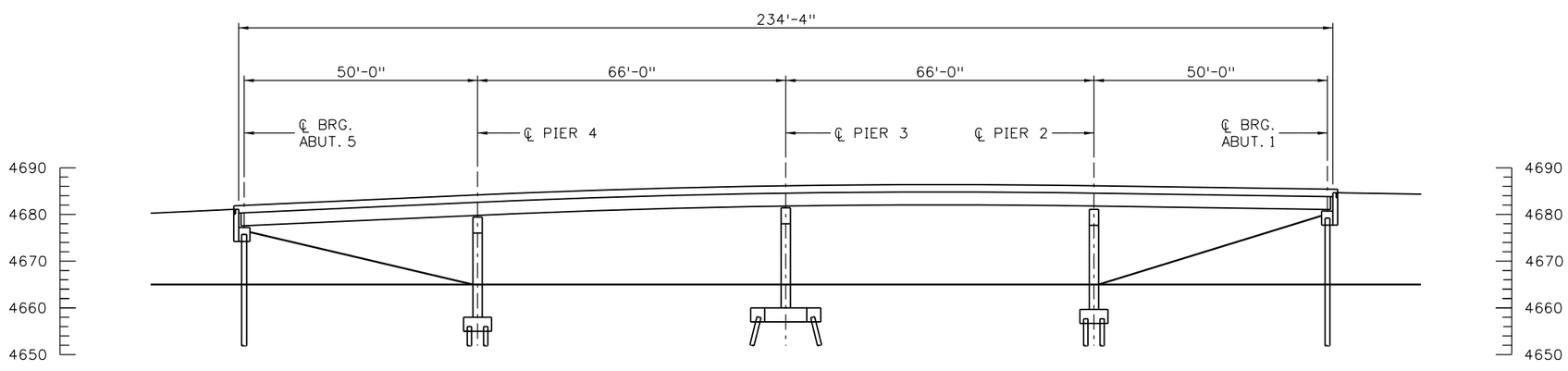

ELEVATION

Print Date: 12/17/2012	Sheet Revisions	Colorado Department of Transportation	As Constructed
File Name: 19301BRDG_SantaFe_GenLayout01.dgn	Date: / Comments / Init.	DOT — DEPARTMENT OF TRANSPORTATION	No Revisions:
Horiz. Scale: 1:30 Vert. Scale:		902 Erie Avenue, Pueblo, CO 81001	Revised:
ATKINS 4601 DTC Boulevard, Suite 700, Denver, CO 80237, Phone: (303) 221-7275 Fax: (303) 221-7276		Phone: 719-546-5438 FAX: 719-546-5702	Void:
		Region 2	

I-25 OVER US 50 BUSINESS GENERAL LAYOUT			Project No./Code
Designer:	Structure Numbers	K-18-AX	
Detailer:		K-18-AY	
Sheet Subset:	Subset Sheets: of		Sheet Number 1

22463 11:19:44 AM \\DENFS06\Trans\Tranproj\100031632 - R2 Rehab\19301\Consultants\Bridge\Drawings\19301BRDG_SantaFe_GenLayout01.dgn

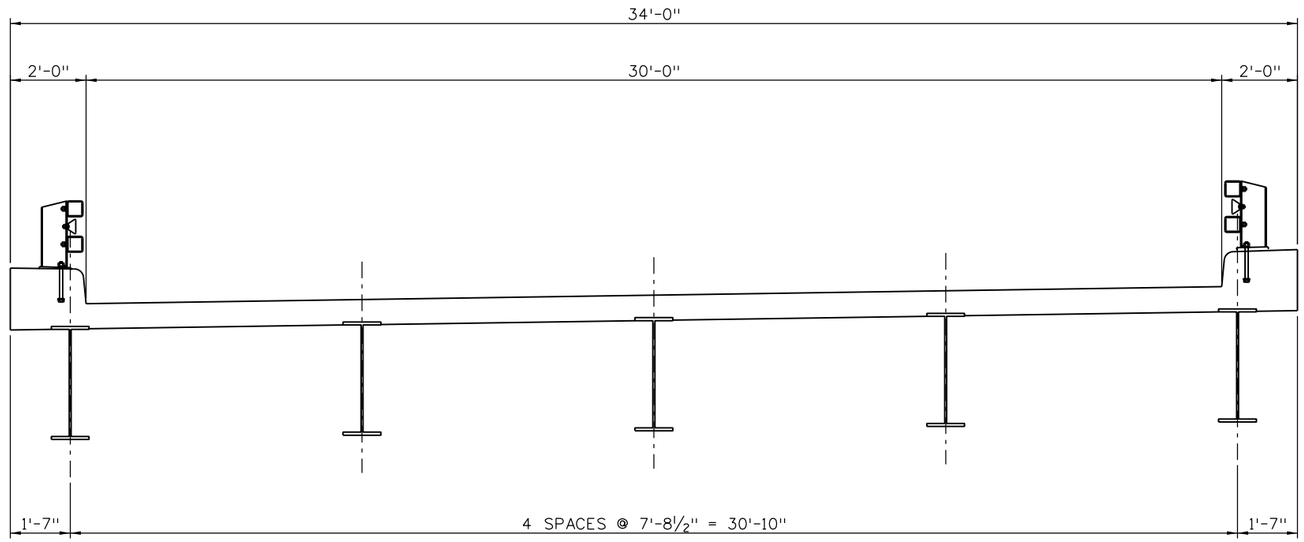

TYPICAL SECTION NORTHBOUND

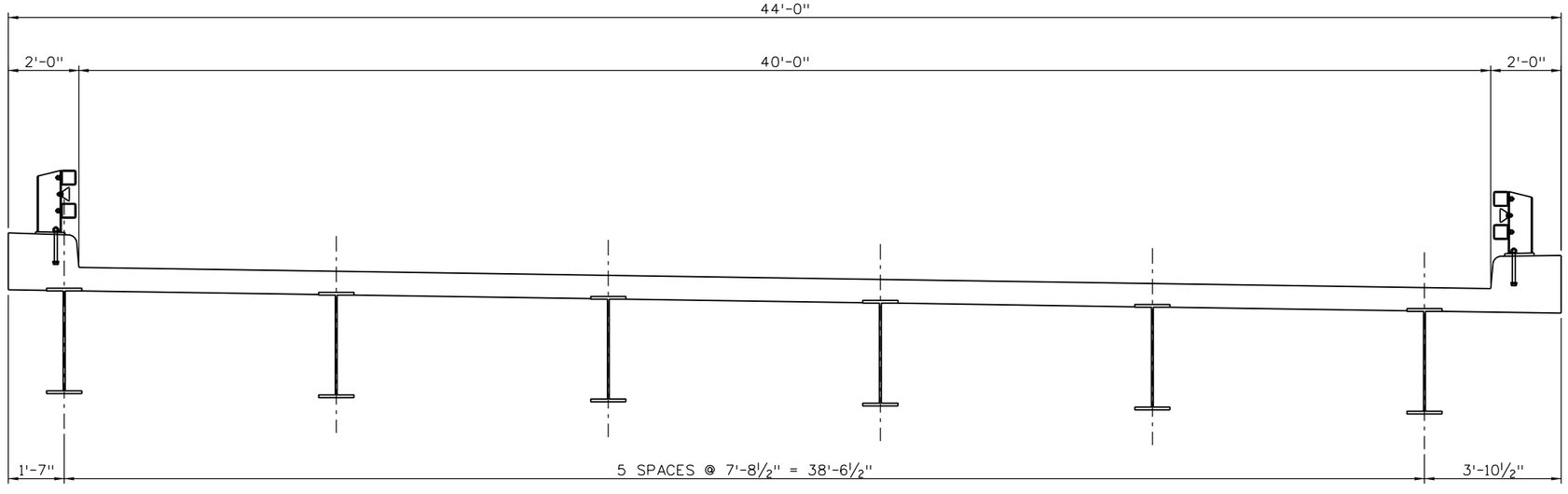

TYPICAL SECTION SOUTHBOUND

Print Date: 12/17/2012	Sheet Revisions	Colorado Department of Transportation	As Constructed
File Name: 19301BRDG_SantaFe_TypSec01.dgn	Date: / Comments / Init.	DOT DEPARTMENT OF TRANSPORTATION	No Revisions:
Horiz. Scale: 1:4 Vert. Scale:		902 Erie Avenue Pueblo, CO 81001 Phone: 719-546-5438 FAX: 719-546-5702	Revised:
ATKINS 4601 DTC Boulevard, Suite 700 Denver, CO 80237 Phone: (303) 221-7275 Fax: (303) 221-7276		Region 2	Void:

I-25 OVER US 50 BUSINESS TYPICAL SECTIONS			Project No./Code
Designer:	Structure Numbers	K-18-AX	
Detailer:		K-18-AY	
Sheet Subset:	Subset Sheets: of		Sheet Number 2

22463 11:19:47 AM \\DENFS06\Trans\Tranproj\10003163 2 - R2 Rehab\19301\Consultants\Bridge\Drawings\19301BRDG_SantaFe_TypSec01.dgn

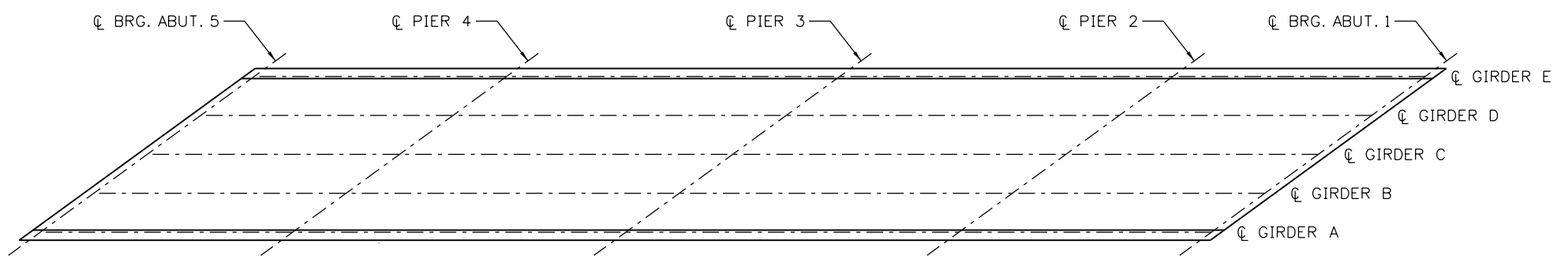

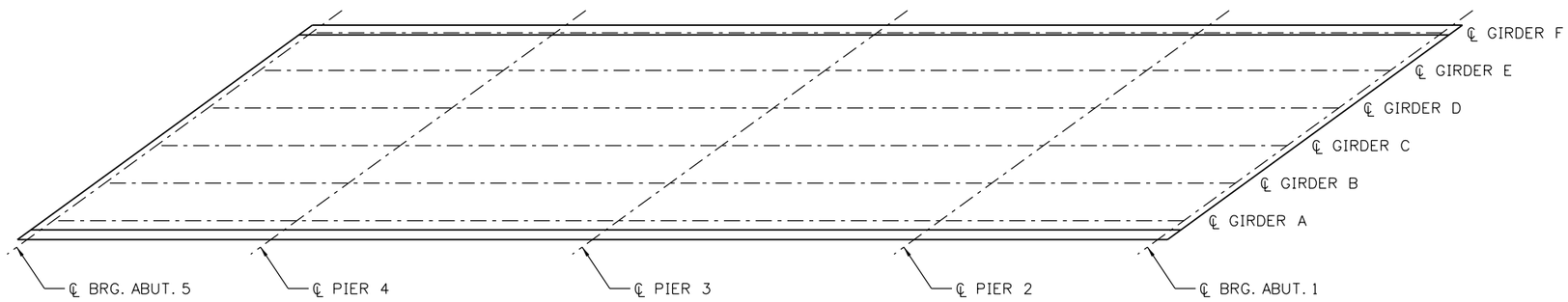

FRAMING PLAN

Print Date: 12/17/2012	Sheet Revisions	Colorado Department of Transportation	As Constructed
File Name: 19301BRDG_SantaFe_FramePlan01.dgn	Date: / Comments / Init.	902 Erie Avenue, Pueblo, CO 81001	No Revisions:
Horiz. Scale: 1:30 Vert. Scale:		Phone: 719-546-5438 FAX: 719-546-5702	Revised:
ATKINS 4601 DTC Boulevard, Suite 700, Denver, CO 80237, Phone: (303) 221-7275 Fax: (303) 221-7276		Region 2	Void:

I-25 OVER US 50 BUSINESS FRAMING PLANS			Project No./Code
Designer:	Structure Numbers	K-18-AX	
Detailer:		K-18-AY	
Sheet Subset:	Subset Sheets: of		Sheet Number 3

22463 11:19:50 AM \\DENFS06\Trans\Tranproj\100031632 - R2 Rehab\19301\Consultants\Bridge\Drawings\19301BRDG_SantaFe_FramePlan01.dgn

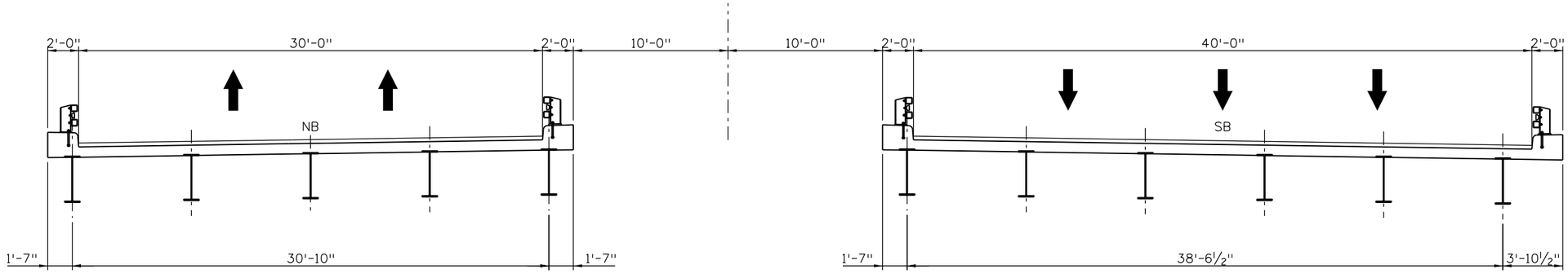

EXISTING CONDITION

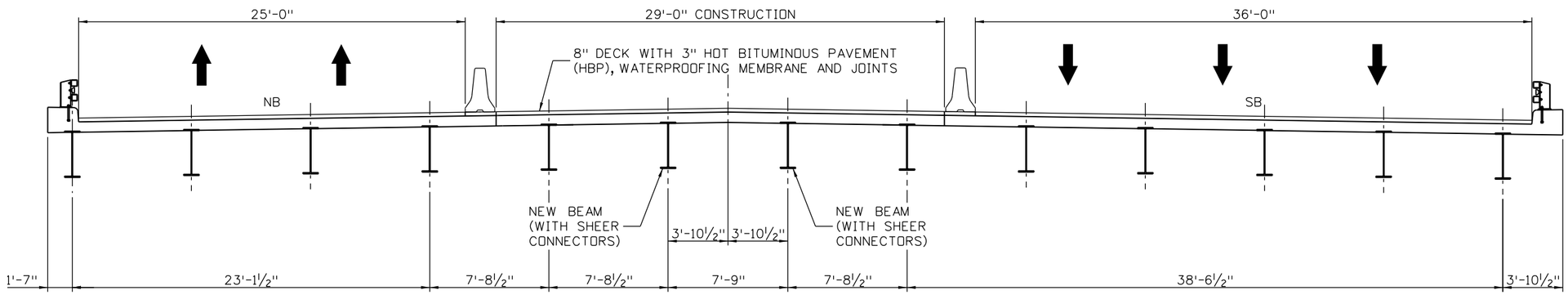

PHASE 1

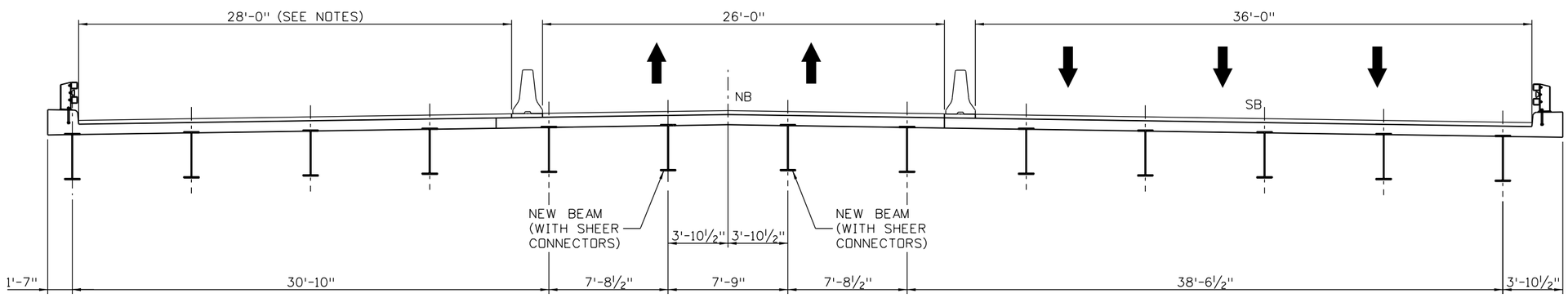

PHASE 2

NOTES:

1. ADD NEW WATERPROOF MEMBRANE.
2. ADD NEW 3" HOT BITUMINOUS PAVEMENT (HBP).
3. REPLACE EXISTING JOINTS.

Print Date: 12/17/2012	Sheet Revisions	Colorado Department of Transportation	As Constructed	I-25 OVER US 50 BUSINESS REHAB LEVEL A (SHEET 1 OF 2)	Project No./Code
File Name: 19301BRDG_SantaFe_TypSec02.dgn	Date: / Comments / Init.	902 Erie Avenue, Pueblo, CO 81001, Phone: 719-546-5438 FAX: 719-546-5702	No Revisions:		
Horiz. Scale: 1:8 Vert. Scale:		Region 2	Revised:	Designer: / Structure Numbers K-18-AX	
ATKINS 4601 DTC Boulevard, Suite 700, Denver, CO 80237, Phone: (303) 221-7275 Fax: (303) 221-7276			Void:	Detailer: K-18-AY	
				Sheet Subset: / Subset Sheets: of	Sheet Number 4

22463 11:19:53 AM \\DENFS06\Trans\Tranproj\100031632 - R2 Rehab\19301\Consultants\Bridge\Drawings\19301BRDG_SantaFe_TypSec02.dgn

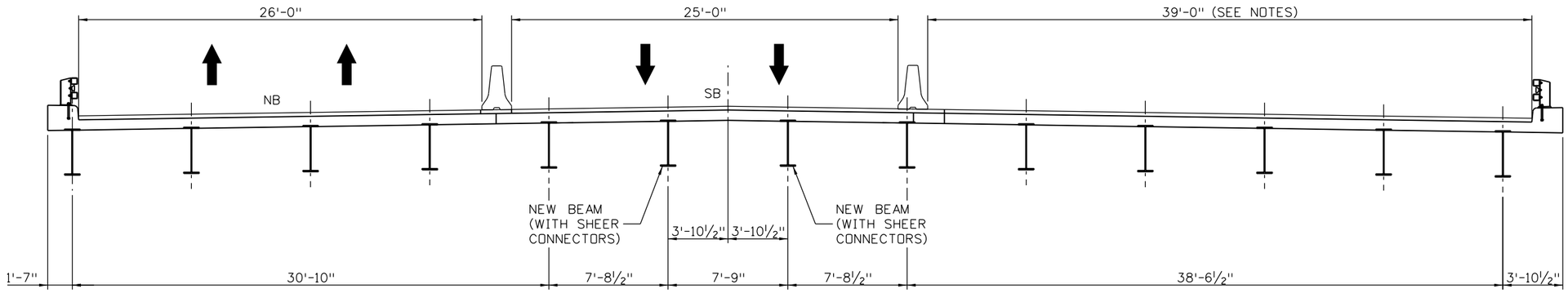

PHASE 3

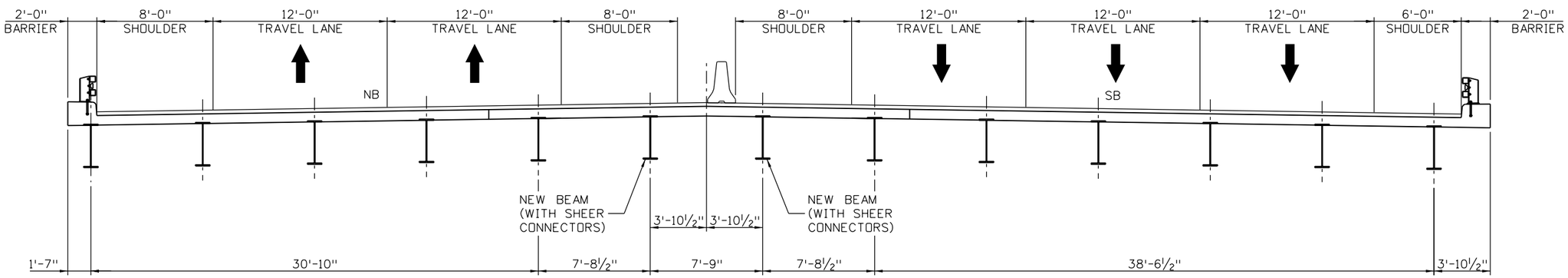

FINAL CONDITION

NOTES:

1. ADD NEW WATERPROOF MEMBRANE.
2. ADD NEW 3" HOT BITUMINOUS PAVEMENT (HBP).
3. REPLACE EXISTING JOINTS.

Print Date: 12/17/2012
File Name: 19301BRDG_SantaFe_TypSec03.dgn
Horiz. Scale: 1:8 Vert. Scale:

ATKINS
4601 DTC Boulevard, Suite 700
Denver, CO 80237
Phone: (303) 221-7275 Fax: (303) 221-7276

Sheet Revisions		
Date:	Comments	Init.

Colorado Department of Transportation
DOT
DEPARTMENT OF TRANSPORTATION
902 Erie Avenue
Pueblo, CO 81001
Phone: 719-546-5438 FAX: 719-546-5702
Region 2

As Constructed
No Revisions:
Revised:
Void:

I-25 OVER US 50 BUSINESS
REHAB LEVEL A
(SHEET 2 OF 2)

Designer:		Structure Numbers	K-18-AX
Detailer:			K-18-AY
Sheet Subset:		Subset Sheets:	of

Project No./Code

Sheet Number 5

22463 11:19:56 AM \\DENFS06\Trans\Tranproj\100031632 - R2 Rehab\19301\Consultants\Bridge\Drawings\19301BRDG_SantaFe_TypSec03.dgn

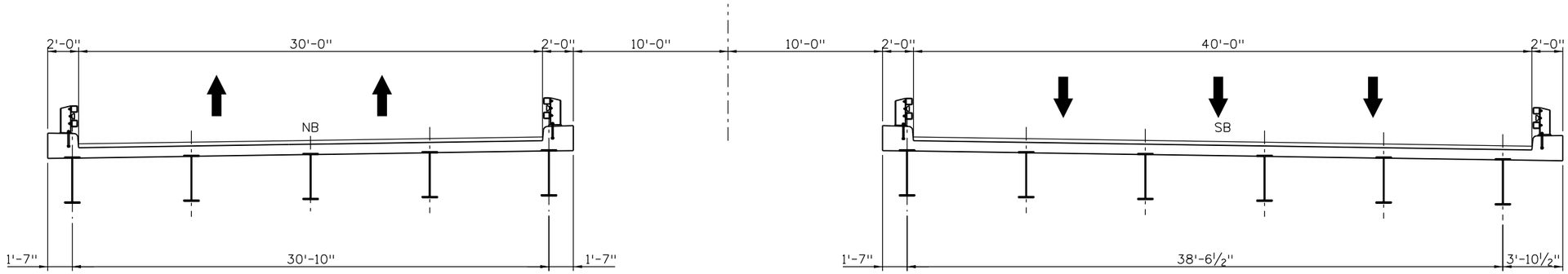

EXISTING CONDITION

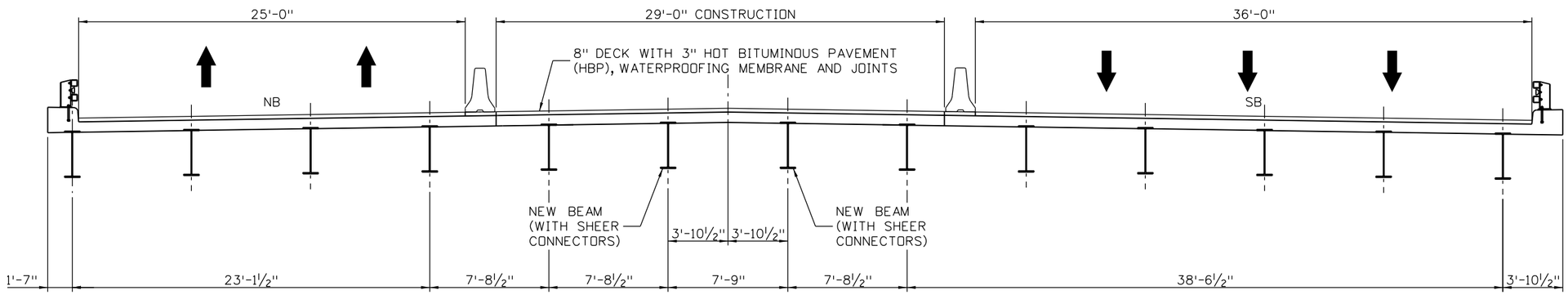

PHASE 1

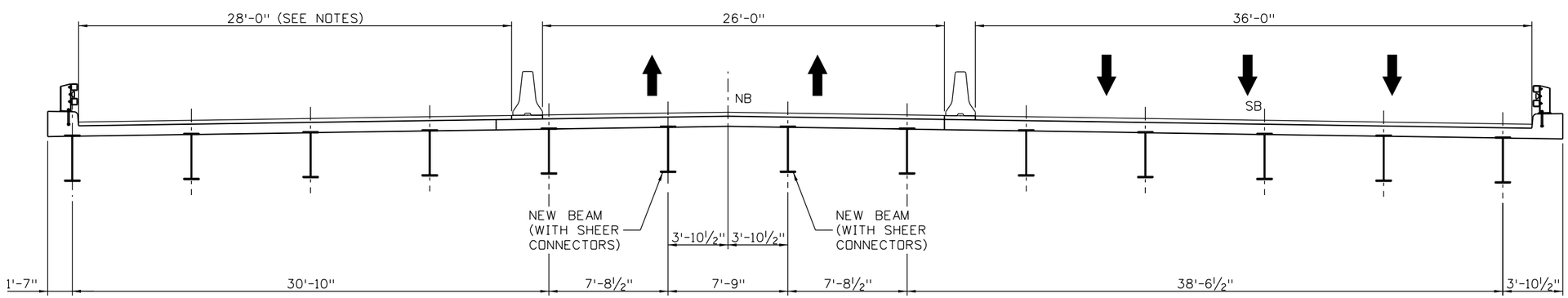

PHASE 2

NOTES:

1. ADD NEW WATERPROOF MEMBRANE.
2. ADD 2" CONCRETE TOPPING.
3. ADD NEW 3" HOT BITUMINOUS PAVEMENT (HBP).
4. REPLACE EXISTING JOINTS.

Print Date: 12/17/2012
File Name: 19301BRDG_SantaFe_TypSec04.dgn
Horiz. Scale: 1:8 Vert. Scale:

ATKINS
4601 DTC Boulevard, Suite 700
Denver, CO 80237
Phone: (303) 221-7275 Fax: (303) 221-7276

Sheet Revisions		
Date:	Comments	Init.

Colorado Department of Transportation
DOT
DEPARTMENT OF TRANSPORTATION
902 Erie Avenue
Pueblo, CO 81001
Phone: 719-546-5438 FAX: 719-546-5702
Region 2

As Constructed
No Revisions:
Revised:
Void:

I-25 OVER US 50 BUSINESS
REHAB LEVEL B
(SHEET 1 OF 2)

Designer:	Structure Numbers	K-18-AX	
Detailer:		K-18-AY	
Sheet Subset:	Subset Sheets:	of	

Project No./Code

Sheet Number 6

22463 11:19:59 AM \\DENFS06\Trans\Tranpro\100031632 - R2 Rehab\19301\Consultants\Bridge\Drawings\19301BRDG_SantaFe_TypSec04.dgn

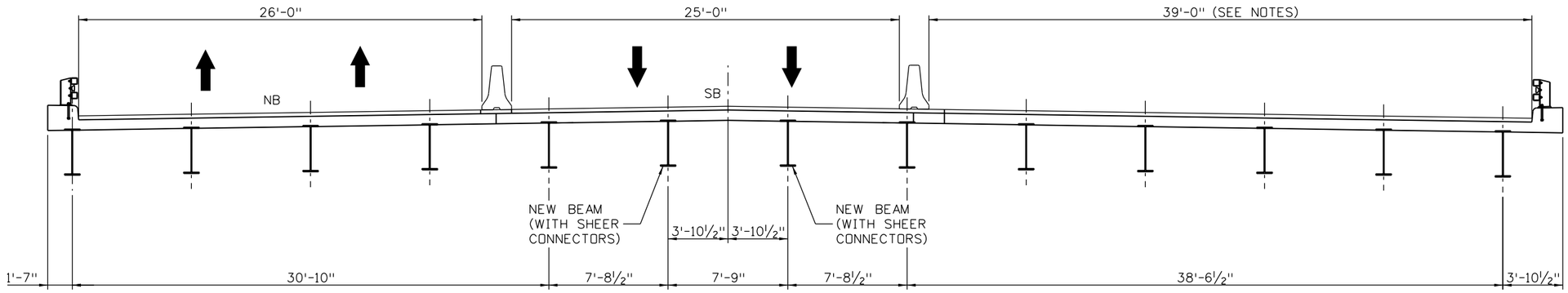

PHASE 3

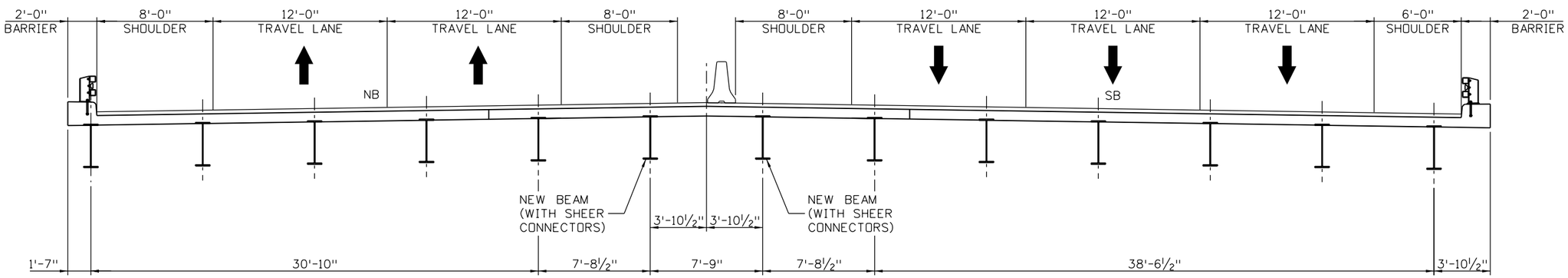

FINAL CONDITION

NOTES:

1. ADD NEW WATERPROOF MEMBRANE.
2. ADD 2" CONCRETE TOPPING.
3. ADD NEW 3" HOT BITUMINOUS PAVEMENT (HBP).
4. REPLACE EXISTING JOINTS.

Print Date: 12/17/2012
File Name: 19301BRDG_SantaFe_TypSec05.dgn
Horiz. Scale: 1:8 Vert. Scale:

ATKINS
4601 DTC Boulevard, Suite 700
Denver, CO 80237
Phone: (303) 221-7275 Fax: (303) 221-7276

Sheet Revisions		
Date:	Comments	Init.

Colorado Department of Transportation
DOT
DEPARTMENT OF TRANSPORTATION
902 Erie Avenue
Pueblo, CO 81001
Phone: 719-546-5438 FAX: 719-546-5702
Region 2

As Constructed
No Revisions:
Revised:
Void:

I-25 OVER US 50 BUSINESS
REHAB LEVEL B
(SHEET 2 OF 2)

Designer:	Structure Numbers	K-18-AX	
Detailer:		K-18-AY	
Sheet Subset:	Subset Sheets:	of	

Project No./Code

Sheet Number 7

22463 11:20:02 AM \\DENFS06\Trans\Transproj\100031632 - R2 Rehab\19301\Consultants\Bridge\Drawings\19301BRDG_SantaFe_TypSec05.dgn

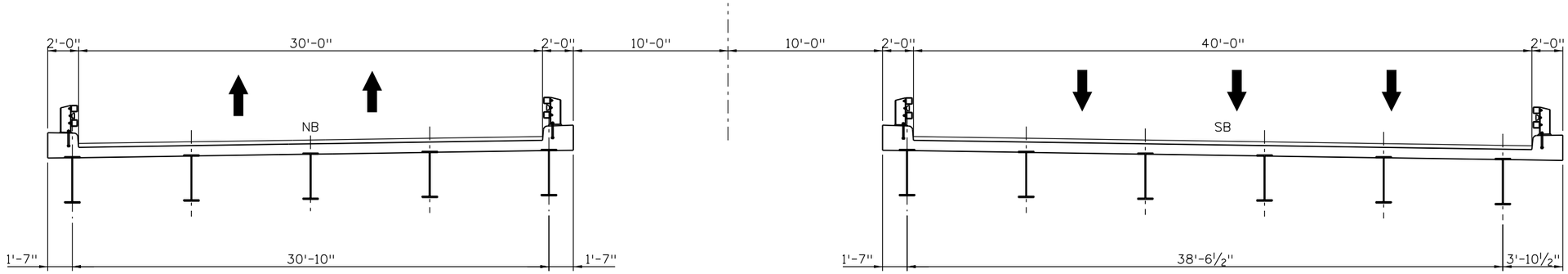

EXISTING CONDITION

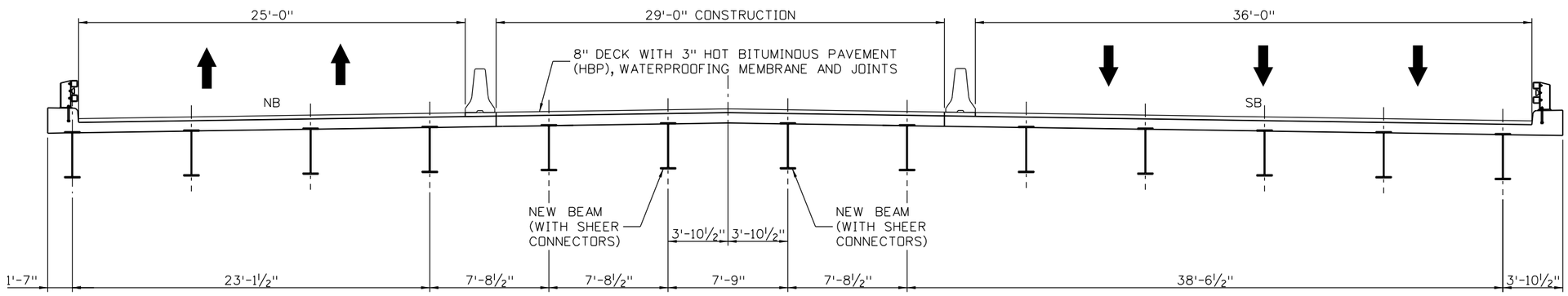

PHASE 1

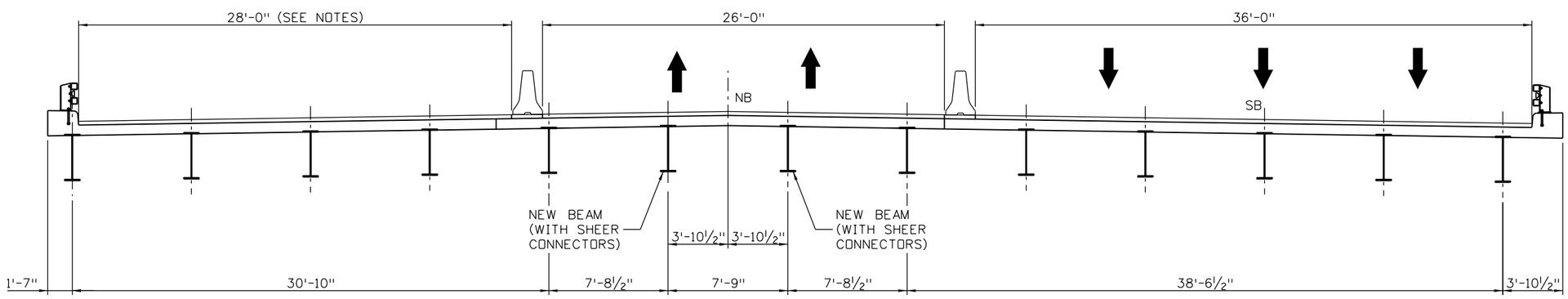

PHASE 2

NOTES:

1. REMOVE DECK.
2. ADD SHEAR CONNECTORS.
3. PROVIDE NEW DECK, WATERPROOF MEMBRANE, AND 3" HOT BITUMINOUS PAVEMENT (HBP).

Print Date: 12/17/2012	Sheet Revisions	Colorado Department of Transportation	As Constructed
File Name: 19301BRDG_SantaFe_TypSec06.dgn	Date: / Comments / Init.	902 Erie Avenue, Pueblo, CO 81001	No Revisions:
Horiz. Scale: 1:8 Vert. Scale:		Phone: 719-546-5438 FAX: 719-546-5702	Revised:
ATKINS 4601 DTC Boulevard, Suite 700, Denver, CO 80237, Phone: (303) 221-7275 Fax: (303) 221-7276		Region 2	Void:

I-25 OVER US 50 BUSINESS
REHAB LEVEL C
(SHEET 1 OF 2)

Designer:	Structure Numbers	K-18-AX	Project No./Code
Detailer:		K-18-AY	
Sheet Subset:	Subset Sheets: of		Sheet Number 8

22463 11:20:06 AM \\DENFS06\Trans\Tranproj\100031632 - R2 Rehab\19301\Consultants\Bridge\Drawings\19301BRDG_SantaFe_TypSec06.dgn

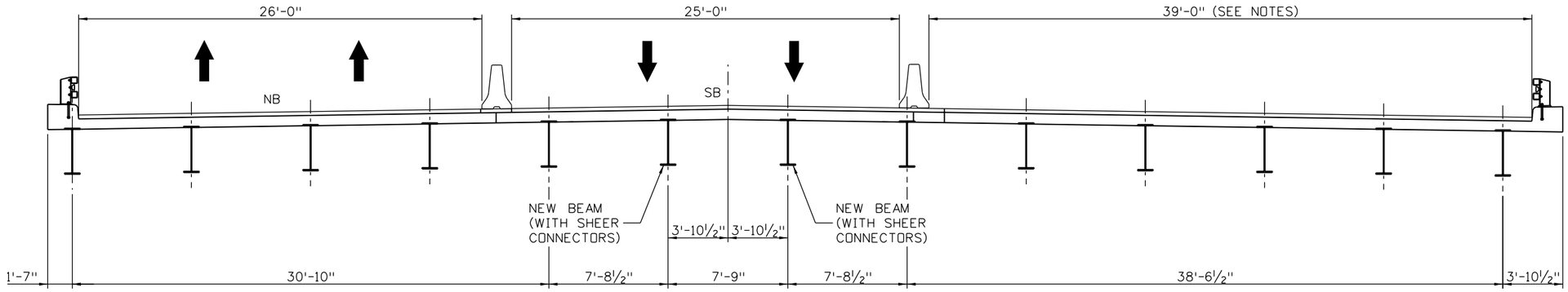

PHASE 3

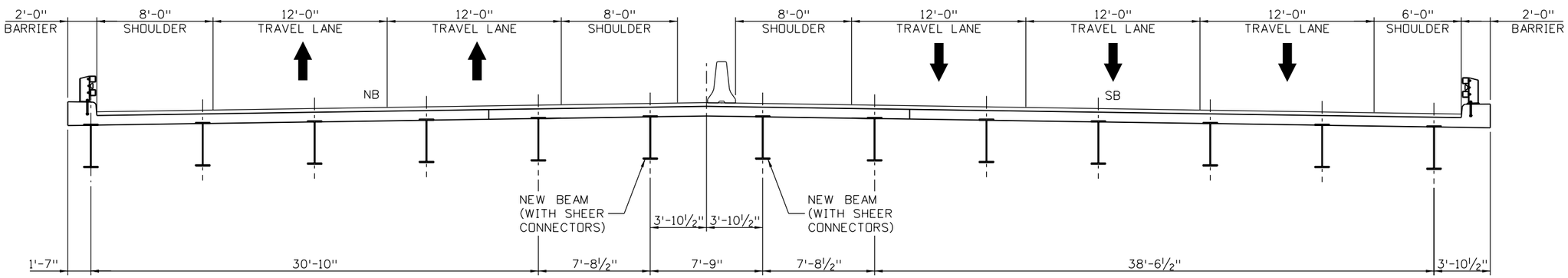

FINAL CONDITION

NOTES:

1. REMOVE DECK.
2. ADD SHEAR CONNECTORS.
3. PROVIDE NEW DECK, WATERPROOF MEMBRANE, AND 3" HOT BITUMINOUS PAVEMENT (HBP).

Print Date: 12/17/2012	Sheet Revisions	Colorado Department of Transportation	As Constructed
File Name: 19301BRDG_SantaFe_TypSec07.dgn	Date: / Comments / Init.	902 Erie Avenue, Pueblo, CO 81001, Phone: 719-546-5438 FAX: 719-546-5702	No Revisions:
Horiz. Scale: 1:8 Vert. Scale:		Region 2	Revised:
ATKINS 4601 DTC Boulevard, Suite 700, Denver, CO 80237, Phone: (303) 221-7275 Fax: (303) 221-7276			Void:

I-25 OVER US 50 BUSINESS
REHAB LEVEL C
(SHEET 2 OF 2)

Designer:	Structure Numbers	K-18-AX
Detailer:		K-18-AY
Sheet Subset:	Subset Sheets:	of

Project No./Code

Sheet Number 9

22463 11:20:10 AM \\DENFS06\Trans\Transproj\100031632 - R2 Rehab\19301\Consultants\Bridge\Drawings\19301BRDG_SantaFe_TypSec07.dgn

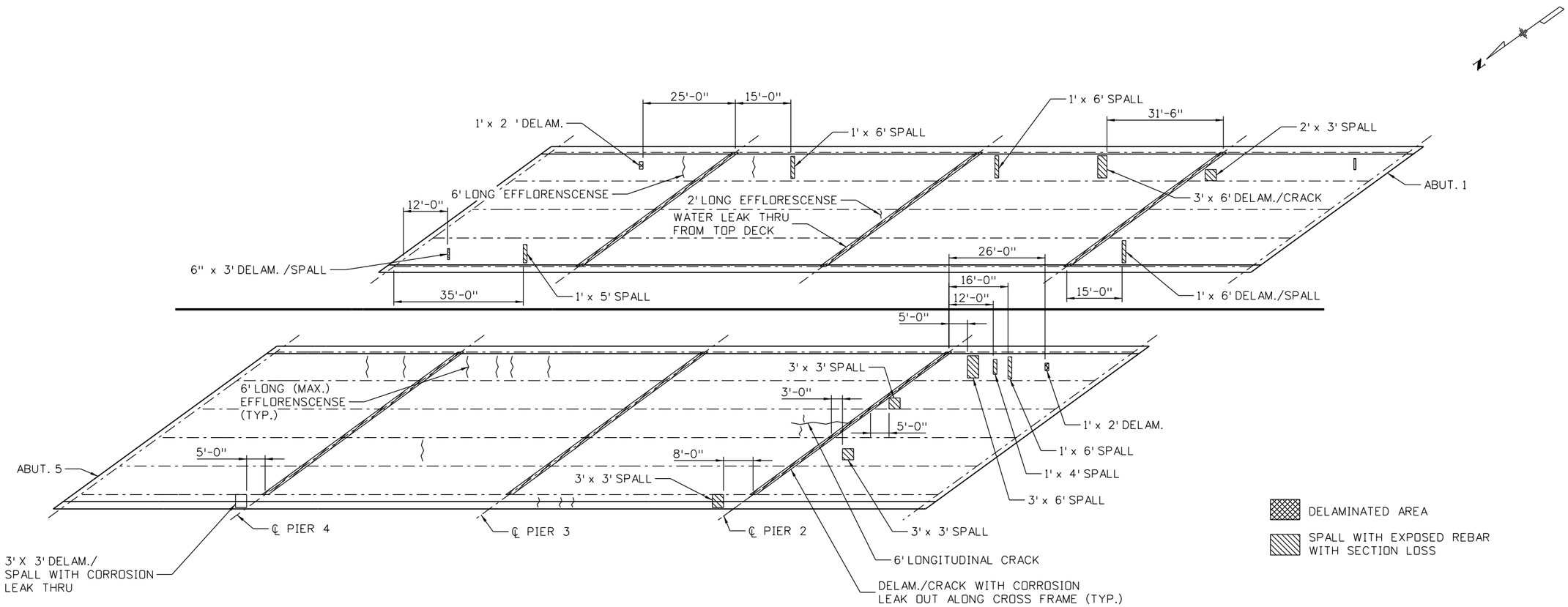

PLAN - BOTTOM OF DECK DEFICIENCIES

LEVEL A - MINIMUM REHABILITATION

1. USE PENETRATING CORROSION INHIBITOR TOP AND BOTTOM OF THE DECK.
2. REMOVE 3-FT MINIMUM STRIP AT THE PIER JOINTS AND PROVIDE REINFORCEMENT TO LAP EXISTING STEEL. PATCH THE STRIP TO MATCH THE EXISTING DECK.
3. APPLY CONCRETE SEALER ON CURB.
4. PATCH TOP OF THE CONCRETE DECK AND PROVIDE WATERPROOFING MEMBRANE AND HOT BITUMINOUS PAVEMENT (HBP).
5. OPTIONAL WASH AND PAINT ALL GIRDERS USING ENCAPSULATING PAINT FOR THE AREAS CLASSIFIED AS CS3 IN THE INSPECTION REPORTS. THE WASH AND PAINTING ALSO APPLY TO THE DIAPHRAGMS AND BEARINGS.
6. FOR K-18-AX, REPAIR THE DAMAGE AT THE BOTTOM BY PROVIDING COVER PLATES IN ORDER TO RESTORE THE FULL GIRDER CAPACITY. TOPCOAT PAINT WILL BE USED FOR THE REPAIR SECTION.

LEVEL B - INTERMEDIATE REHABILITATION

1. REMOVE ASPHALT WITH CLASS 1 REMOVAL ON ENTIRE DECK, EXCEPT IN AREAS NEEDING CLASS 2 AND 3 REMOVALS, BEFORE APPLYING THE CORROSION INHIBITOR. ADD 2-IN OF CONCRETE CLASS DT (DECK TOPPING) WITH STAINLESS MESH (INCLUDING CUR) BEFORE PLACING THE WATERPROOF MEMBRANE AND THE HBP.
2. TREAT THE CURBS WITH CORROSION INHIBITOR.
3. CONSIDER TOPCOAT PAINT ON REMAINDER OF EXTERIOR GIRDERS.
4. ADD INTERMEDIATE DIAPHRAGMS NEAR THE SUPPORTS TO INCREASE THE CAPACITY OF THE GIRDER.

LEVEL C - EXTENSIVE REHABILITATION

1. REMOVE AND REPLACE THE CONCRETE DECK.
2. ADD SHEAR CONNECTORS TO PROVIDE COMPOSITE ACTION BETWEEN THE GIRDERS AND THE CONCRETE DECK, WATERPROOF MEMBRANE AND HBP.
3. REPLACE THE BRIDGE RAILS.
4. PROVIDE NEW APPROACH SLABS WITH EXPANSION JOINTS AT THE ENDS.
5. CONSIDER TOPCOAT PAINT ON REMAINDER OF EXTERIOR GIRDERS AND DIAPHRAGMS.
6. ADD INTERMEDIATE DIAPHRAGMS NEAR THE SUPPORTS TO INCREASE THE CAPACITY OF THE GIRDER.

Print Date: 12/17/2012
File Name: 19301BRDG_SantaFe_SuperRepair01.dgn
Horiz. Scale: 1:30 Vert. Scale:

ATKINS
4601 DTC Boulevard, Suite 700
Denver, CO 80237
Phone: (303) 221-7275 Fax: (303) 221-7276

Sheet Revisions

Date:	Comments	Init.

Colorado Department of Transportation
DOT
DEPARTMENT OF TRANSPORTATION
902 Erie Avenue
Pueblo, CO 81001
Phone: 719-546-5438 FAX: 719-546-5702
Region 2

As Constructed
No Revisions:
Revised:
Void:

I-25 OVER US 50 BUSINESS
SUPERSTRUCTURE REPAIRS

Designer:
Detailer:
Sheet Subset:
Structure Numbers K-18-AX K-18-AY
Subset Sheets: of

Project No./Code
Sheet Number 10

22463 11:20:13 AM \\DENFS06\Trans\Tranpro\\100031632 - R2 Rehab\19301\Consultants\Bridge\Drawings\19301BRDG_SantaFe_SuperRepair01.dgn

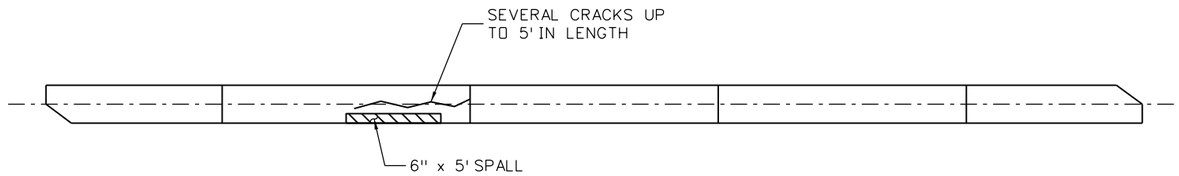

PIER 2 NORTHBOUND PLAN

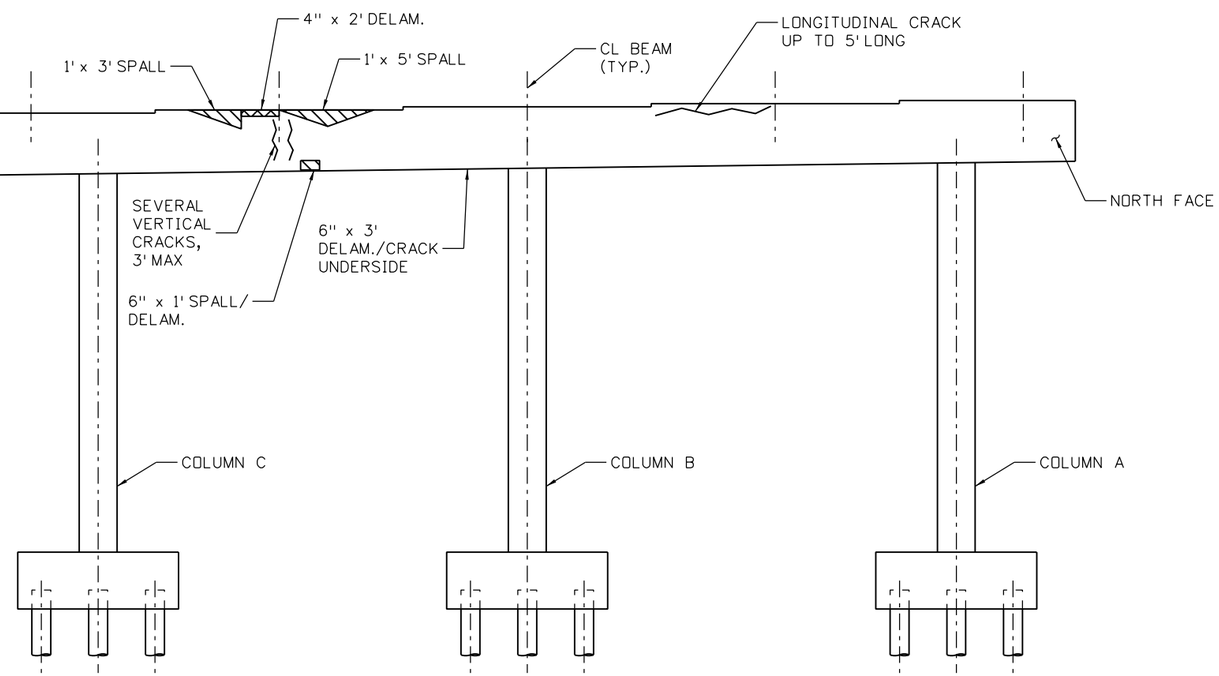

PIER 2 NORTHBOUND ELEVATION

LEVEL A - MINIMAL REHABILITATION

1. REMOVE ALL LOOSE AND DELAMINATED CONCRETE FROM THE CAPS AND COLUMNS.
2. REPLACE REINFORCING WITH SIGNIFICANT SECTION LOSS.
3. TREAT THE PIER CAPS AND COLUMNS WITH CORROSION INHIBITOR AND CONCRETE SEALER.
4. ADD A REINFORCING CAGE AND ENCAPSULATE WITH 4-IN OF DT CONCRETE.

LEVEL B - INTERMEDIATE REHABILITATION

1. REMOVE ALL LOOSE AND DELAMINATED CONCRETE FROM THE CAP AND COLUMNS.
2. REPLACE REINFORCING WITH SIGNIFICANT SECTION LOSS.
3. TREAT THE PIER CAPS AND COLUMNS WITH CORROSION INHIBITOR AND CONCRETE SEALER.
4. ADD A REINFORCING CAGE AND ENCAPSULATE WITH 4-IN OF DT CONCRETE.
5. WRAP THE SEVERE PATCHED CAPS WITH FRP.

LEVEL C - EXTENSIVE REHABILITATION

1. REMOVE ALL LOOSE AND DELAMINATED CONCRETE FROM THE CAP AND COLUMNS.
2. REPLACE REINFORCING WITH SIGNIFICANT SECTION LOSS.
3. TREAT THE PIER CAPS AND COLUMNS WITH CORROSION INHIBITOR AND CONCRETE SEALER.
4. ADD A REINFORCING CAGE AND ENCAPSULATE WITH 4-IN OF DT CONCRETE.
5. WRAP THE PIER COLUMNS AND CAPS WITH FRP.

SPALL WITH EXPOSED REBAR WITH SECTION LOSS

DELAMINATED AREA

22463 11:20:16 AM \\DENFS06\Trans\Tranproj\100031632 - R2 Rehab\19301\Consultants\Bridge\Drawings\19301BRDG_SantaFe_PierRepair01NB.dgn

Print Date: 12/17/2012	Sheet Revisions	Colorado Department of Transportation	As Constructed
File Name: 19301BRDG_SantaFe_PierRepair01NB.dgn	Date: / Comments / Init.	902 Erie Avenue, Pueblo, CO 81001	No Revisions:
Horiz. Scale: 1:8 Vert. Scale:		Phone: 719-546-5438 FAX: 719-546-5702	Revised:
ATKINS 4601 DTC Boulevard, Suite 700, Denver, CO 80237, Phone: (303) 221-7275 Fax: (303) 221-7276		Region 2	Void:

I-25 OVER US 50 BUSINESS SUBSTRUCTURE REPAIRS (SHEET 1 OF 6)		Project No./Code
Designer:	Structure Numbers K-18-AX	
Detailer:	K-18-AY	
Sheet Subset:	Subset Sheets: of	Sheet Number 11

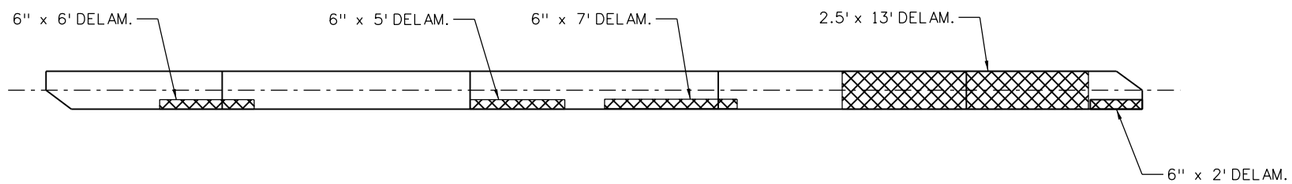

PIER 3 NORTHBOUND PLAN

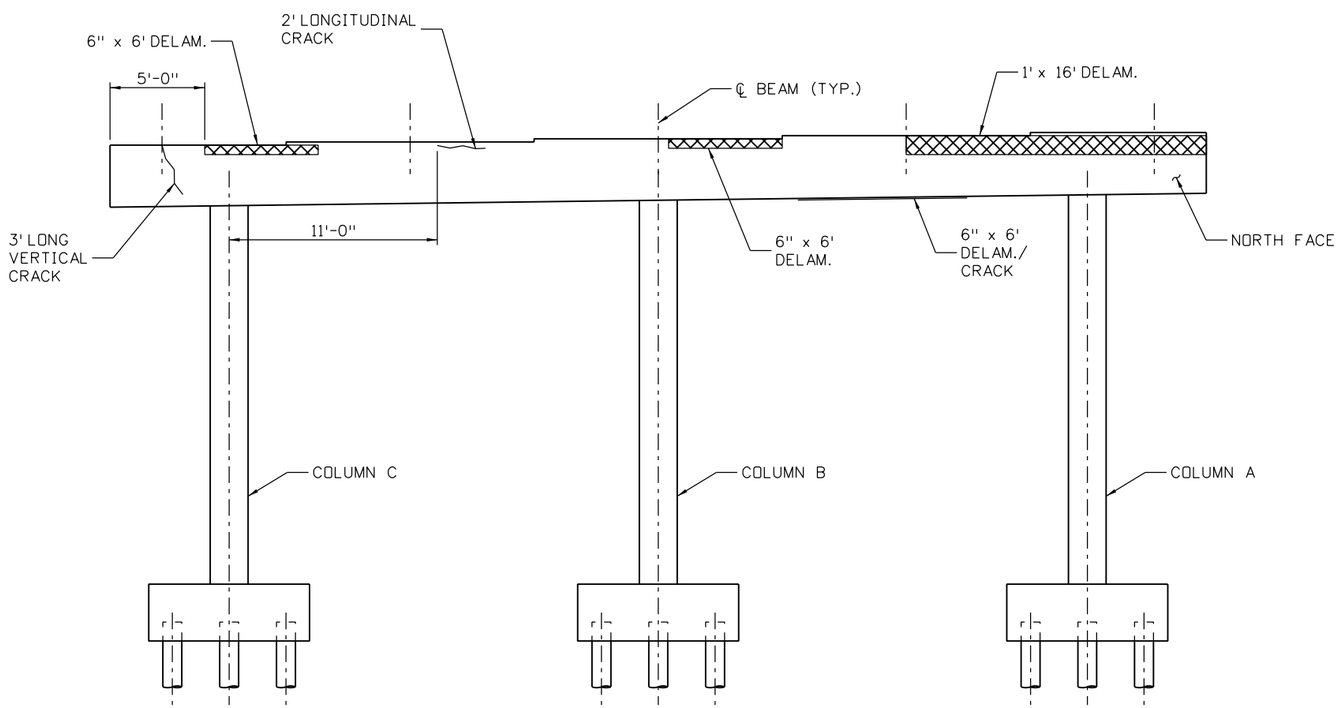

PIER 3 NORTHBOUND ELEVATION

NOTE:

FOR REHABILITATION NOTES, SEE SHEET 11.

DELAMINATED AREA

Print Date: 12/17/2012	Sheet Revisions	Colorado Department of Transportation	As Constructed
File Name: 19301BRDG_SantaFe_PierRepair02NB.dgn	Date: / Comments / Init.	902 Erie Avenue, Pueblo, CO 81001	No Revisions:
Horiz. Scale: 1:8 Vert. Scale:		Phone: 719-546-5438 FAX: 719-546-5702	Revised:
ATKINS 4601 DTC Boulevard, Suite 700, Denver, CO 80237, Phone: (303) 221-7275 Fax: (303) 221-7276		Region 2	Void:

I-25 OVER US 50 BUSINESS
SUBSTRUCTURE REPAIRS
(SHEET 2 OF 6)

Designer:	Structure Numbers	K-18-AX	Project No./Code
Detailer:		K-18-AY	
Sheet Subset:	Subset Sheets: of		Sheet Number 12

22463 11:20:19 AM \\DENFS06\Trans\Tranproj\100031632 - R2 Rehab\19301\Consultants\Bridge\Drawings\19301BRDG_SantaFe_PierRepair02NB.dgn

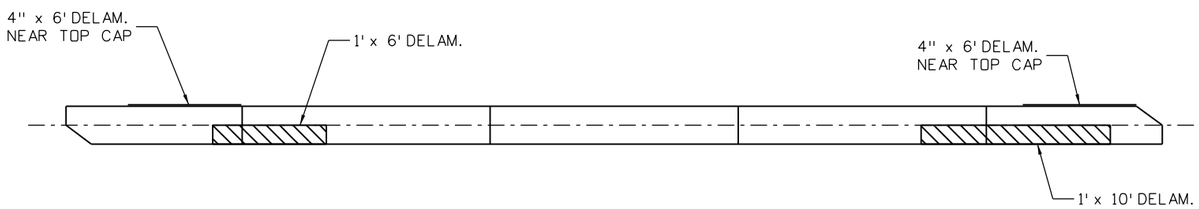

PIER 4 NORTHBOUND PLAN

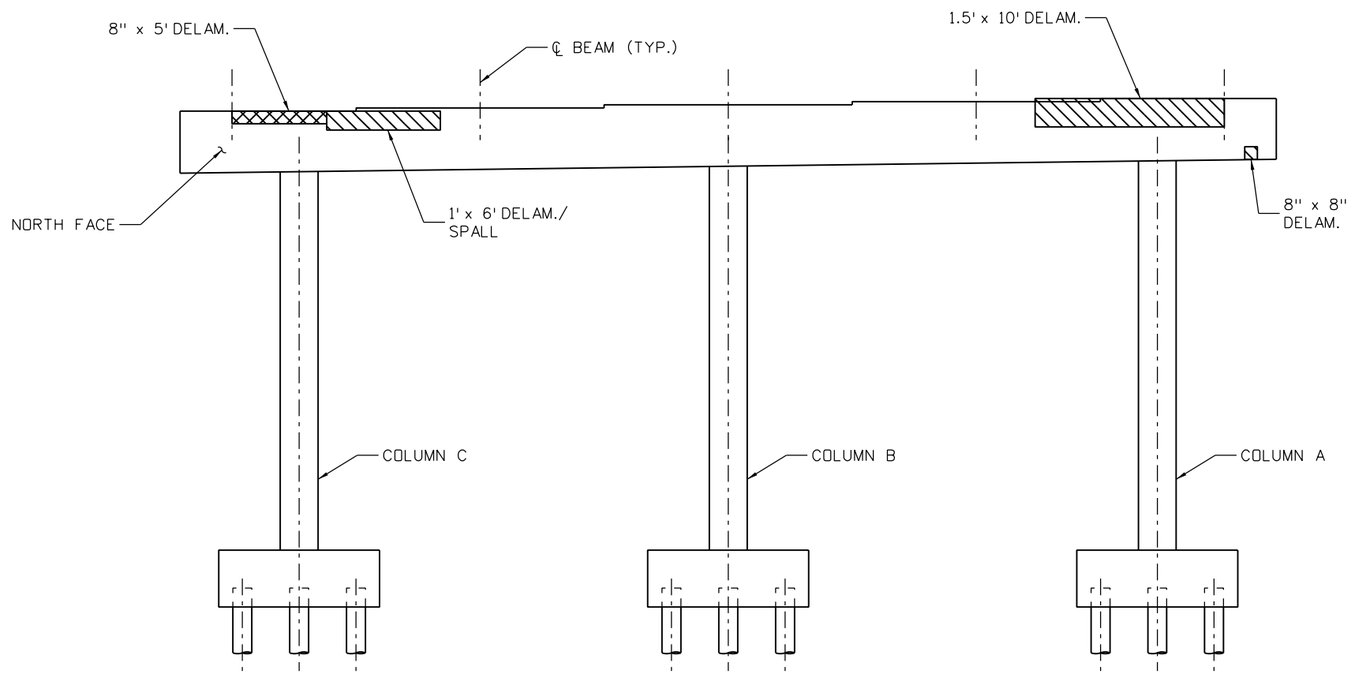

PIER 4 NORTHBOUND ELEVATION

NOTE:

FOR REHABILITATION NOTES, SEE SHEET 11.

SPALL WITH EXPOSED REBAR WITH SECTION LOSS

DELAMINATED AREA

Print Date: 12/17/2012	Sheet Revisions	Colorado Department of Transportation	As Constructed
File Name: 19301BRDG_SantaFe_PierRepair03NB.dgn	Date: / Comments / Init.	902 Erie Avenue, Pueblo, CO 81001	No Revisions:
Horiz. Scale: 1:8 Vert. Scale:		Phone: 719-546-5438 FAX: 719-546-5702	Revised:
ATKINS 4601 DTC Boulevard, Suite 700, Denver, CO 80237, Phone: (303) 221-7275 Fax: (303) 221-7276		Region 2	Void:

I-25 OVER US 50 BUSINESS SUBSTRUCTURE REPAIRS (SHEET 3 OF 6)			Project No./Code
Designer:	Structure Numbers	K-18-AX	
Detailer:		K-18-AY	
Sheet Subset:	Subset Sheets: of		Sheet Number 13

22463 11:20:22 AM \\DENFS06\Trans\Tranproj\100031632 - R2 Rehab\19301\Consultants\Bridge\Drawings\19301BRDG_SantaFe_PierRepair03NB.dgn

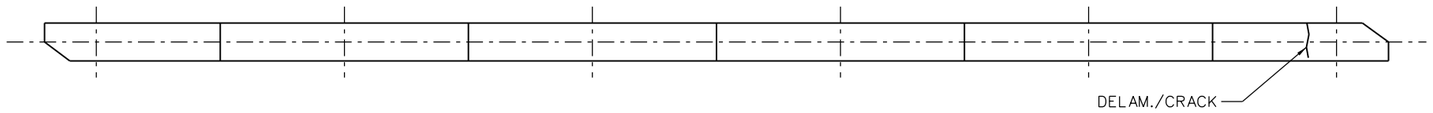

PIER 2 SOUTHBOUND PLAN

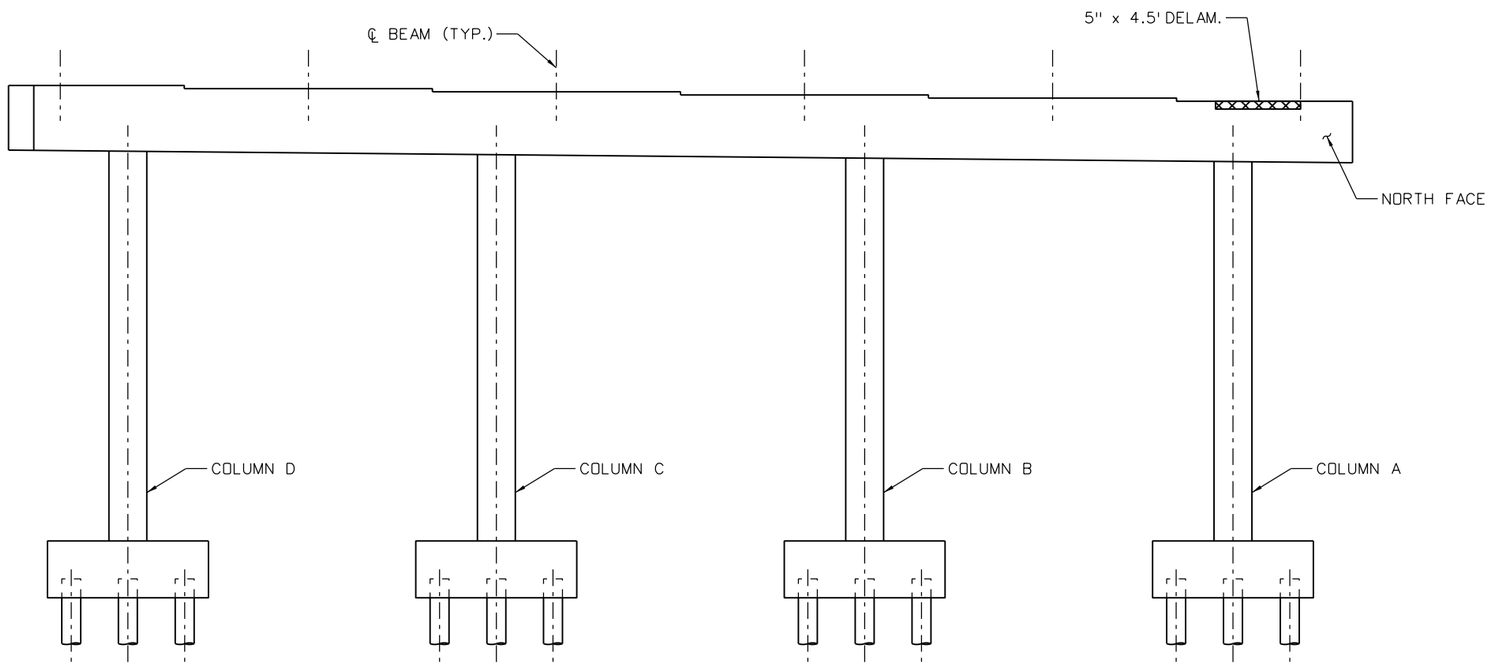

PIER 2 SOUTHBOUND ELEVATION

NOTE:

FOR REHABILITATION NOTES, SEE SHEET 11.

DELAMINATED AREA

Print Date: 12/17/2012	Sheet Revisions	Colorado Department of Transportation	As Constructed
File Name: 19301BRDG_SantaFe_PierRepair01SB.dgn	Date: / Comments / Init.	902 Erie Avenue, Pueblo, CO 81001	No Revisions:
Horiz. Scale: 1:8 Vert. Scale:		Phone: 719-546-5438 FAX: 719-546-5702	Revised:
ATKINS 4601 DTC Boulevard, Suite 700, Denver, CO 80237, Phone: (303) 221-7275 Fax: (303) 221-7276		Region 2	Void:

I-25 OVER US 50 BUSINESS SUBSTRUCTURE REPAIRS (SHEET 4 OF 6)			Project No./Code
Designer:	Structure Numbers	K-18-AX	
Detailer:		K-18-AY	
Sheet Subset:	Subset Sheets: of		Sheet Number 14

22463 11:20:24 AM \\DENFS06\Trans\Tramproj\100031632 - R2 Rehab\19301\Consultants\Bridge\Drawings\19301BRDG_SantaFe_PierRepair01SB.dgn

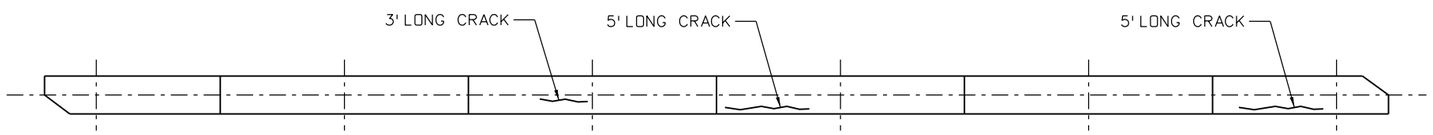

PIER 3 SOUTHBOUND PLAN

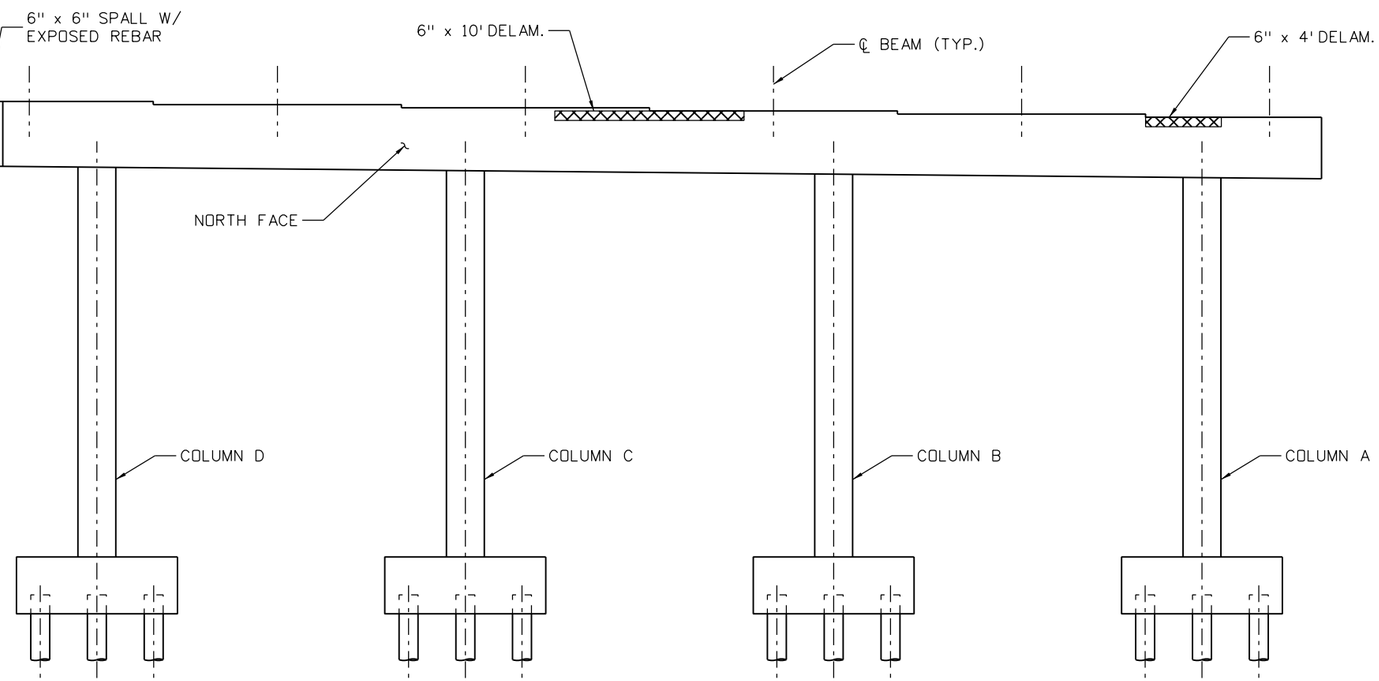

PIER 3 SOUTHBOUND ELEVATION

NOTE:

FOR REHABILITATION NOTES, SEE SHEET 11.

SPALL WITH EXPOSED REBAR WITH SECTION LOSS

DELAMINATED AREA

Print Date: 12/17/2012	Sheet Revisions	Colorado Department of Transportation	As Constructed
File Name: 19301BRDG_SantaFe_PierRepair02SB.dgn	Date: / Comments / Init.	902 Erie Avenue, Pueblo, CO 81001	No Revisions:
Horiz. Scale: 1:8 Vert. Scale:		Phone: 719-546-5438 FAX: 719-546-5702	Revised:
ATKINS 4601 DTC Boulevard, Suite 700, Denver, CO 80237, Phone: (303) 221-7275 Fax: (303) 221-7276		Region 2	Void:

I-25 OVER US 50 BUSINESS SUBSTRUCTURE REPAIRS (SHEET 5 OF 6)			Project No./Code
Designer:	Structure Numbers	K-18-AX	
Detailer:		K-18-AY	
Sheet Subset:	Subset Sheets: of		Sheet Number 15

22463 11:20:28 AM \\DENFS06\Trans\Tranproj\100031632 - R2 Rehab\19301\Consultants\Bridge\Drawings\19301BRDG_SantaFe_PierRepair02SB.dgn

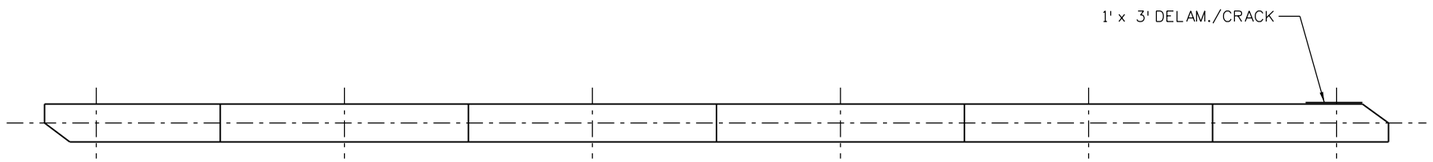

PIER 4 SOUTHBOUND PLAN

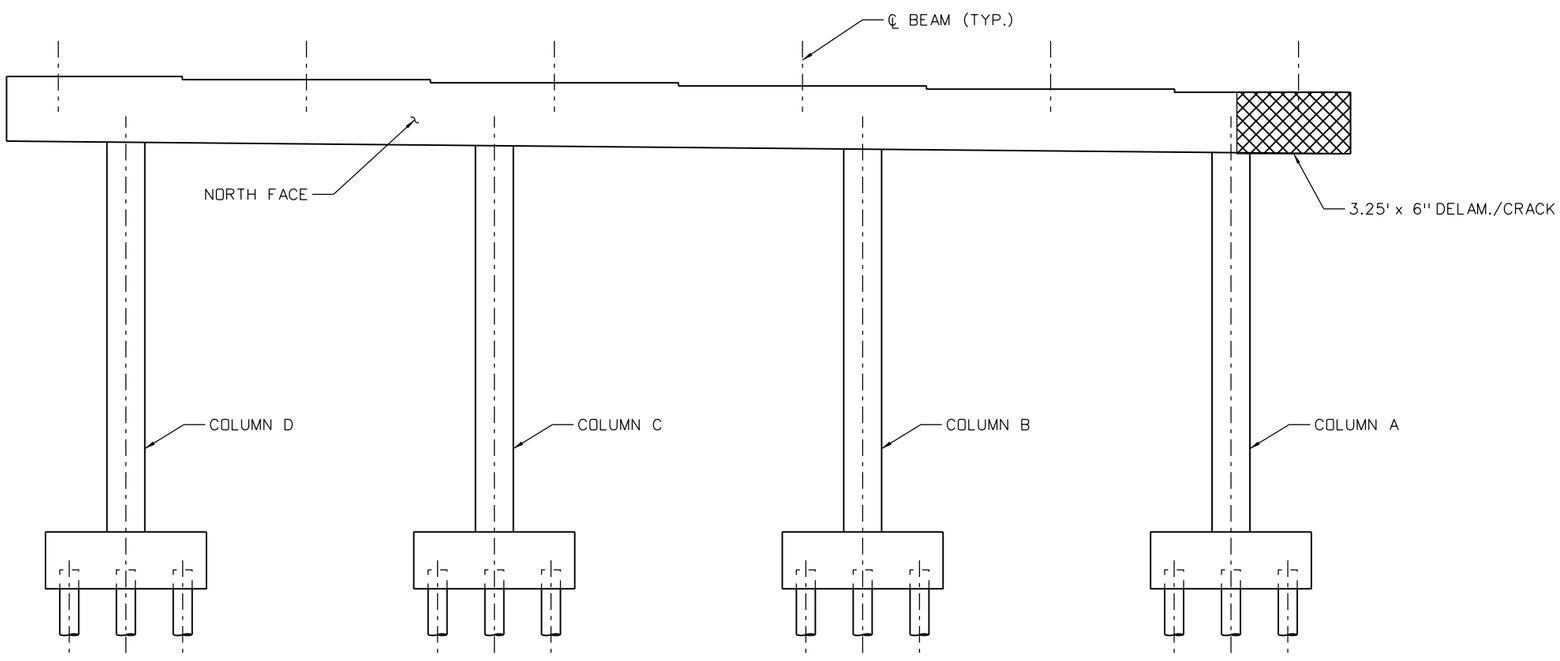

NOTE:

FOR REHABILITATION NOTES, SEE SHEET 11.

DELAMINATED AREA

PIER 4 SOUTHBOUND ELEVATION

Print Date: 12/17/2012	Sheet Revisions	Colorado Department of Transportation	As Constructed
File Name: 19301BRDG_SantaFe_PierRepair03SB.dgn	Date: / Comments / Init.	DOT — 902 Erie Avenue, Pueblo, CO 81001	No Revisions:
Horiz. Scale: 1:8 Vert. Scale:		Phone: 719-546-5438 FAX: 719-546-5702	Revised:
ATKINS — 4601 DTC Boulevard, Suite 700, Denver, CO 80237, Phone: (303) 221-7275 Fax: (303) 221-7276		Region 2	Void:

I-25 OVER US 50 BUSINESS
SUBSTRUCTURE REPAIRS
(SHEET 6 OF 6)

Designer:	Structure Numbers	K-18-AX	Project No./Code
Detailer:		K-18-AY	
Sheet Subset:	Subset Sheets: of		Sheet Number 16

22463 11:20:31 AM \\DENFS06\Trans\Transpro\100031632 - R2 Rehab\19301\Consultants\Bridge\Drawings\19301BRDG_SantaFe_PierRepair03SB.dgn

CHAPTER 6

US 50 Business EB over Arkansas River Bridge

(K-18-R)

6.1. Existing Bridge Condition

6.1.1. Description of Structure

The 286-ft long bridge, built in 1924, consists of a single span through truss bridge span over the Arkansas River and pedestrian trail. This bridge is on the national register of historic places. The bridge carried both eastbound and westbound traffic until the newer adjacent bridge (K-18-FF) was built in 1978. The bridge currently carries two lanes of eastbound traffic. The curb-to-curb width is 26.5-ft providing one traffic lane in each direction and 7-ft raised pedestrian sidewalks/rail on one side. The deck consists of cast-in-place concrete with an asphalt overlay. Guardrails were present on both sides of the truss frames.

Photo 6-1: Elevation View (Looking West)

The floor beams and stringers are not composite with the concrete deck. The bridge is supported on reinforced concrete abutments. Rocker nest bearings are present at the end of the girder units. The minimum vertical clearance is approximately 13.8-ft from the gutter line to the knee brace of the portal. A water main utility pipe was attached to the pedestrian rail.

The annual average daily traffic (AADT) was 10,050 vehicles, with 5% truck traffic, in 2007 and is projected to be 12,360 vehicles in 2027. The roadway functional classification is an urban minor arterial system.

An inspection of the truss lower chord and floor system was performed in September of 2012. The inspection revealed deterioration of steel components and typical corrosion stemming from poor drainage, debris collection and concrete deck deterioration. The rocker nest bearing assemblies were not functionally properly and have not been for several decades. The inspection report recommended

appropriate maintenance and rehabilitation to mitigate the ongoing deterioration of the structural components in order to prolong the service life of the bridge.

General Layout, Framing Plan, and Typical Section drawings of the existing bridge are located in section 6.4.

6.1.2. Sufficiency, Condition, and Appraisal Rating Summary

The bridge is classified as structurally deficient and has a sufficiency rating of 47.2 based on the latest bridge inspection report (see Table 6-1).

Bridge Name	Bridge Designation	Sufficiency Rating	Structurally Deficient?	Functionally Obsolete?	Deck (Item 58)	Superstructures (Item 59)	Substructures (Item 60)	Structural Condition (Item 67)	Deck Geometry (Item 68)	Underclearances (Item 69)	Waterway Adequacy (Item 71)	Approach Roadway Alignment (Item 72)
US 50 Business EB (Santa Fe Ave.) over Arkansas River	K-18-R	47.2	YES		4	4	5	4	2	N	9	8

Structurally Deficient
1. A condition rating of 4 or less for
Item 58 - Deck or
Item 59 - Superstructures or
Item 60 - Substructures or
Item 62 - Culvert and Retaining Walls or
2. An appraisal of 2 or less for
Item 67 - Structural Condition or
Item 71 - Waterway Adequacy

Functionally Obsolete
1. An appraisal rating of 3 or less for
Item 68 - Deck Geometry or
Item 69 - Underclearances or
Item 72 - Approach Roadway Alignment or
2. An appraisal of 3 or less for
Item 67 - Structural Condition or
Item 71 - Waterway Adequacy

Any bridge classified as structurally deficient is excluded from the functionally obsolete category.

Table 6-1 Sufficiency, Condition, and Appraisal Rating Summary

The comprehensive evaluation of the condition ratings for the Deck (Item 58), Superstructure (Item 59), and Substructure (Item 60) dating back to the 1970s revealed that the deterioration rate of the bridge has been steady. The current deficiencies have been present as far as 20 years ago. A detailed matrix of the deterioration rate can be found in Appendix B.

6.1.3 Load Capacity Analysis

According to the 2012 bridge inspection report, the operating and inventory ratings using allowable stress method were 50.0 and 34.1, respectively.

Load capacity analysis for the existing condition using the Load Factor Rating (LFR) method was evaluated for the bridge and the results are summarized below.

	Existing Bridge Condition		
Inventory	Ext. Truss Rating	Controlling Limit State	Location Span - (%)
	1.03	**Axial - Compression**	**M15L16**
Operating	Ext. Truss Rating	Controlling Limit State	Location Span - (%)
	1.72	**Axial - Compression**	**M15L16**
Permit	Ext. Truss Rating	Controlling Limit State	Location Span - (%)
	1.14	**Axial - Compression**	**M15L16**

Table 6-2 Existing Condition Load Factor Rating Summary (Truss Members)

	Existing Bridge Condition		
Inventory	Ext. Stringer Rating	Controlling Limit State	Location Span - (%)
	1.05	**Design Flexure**	**1 - (50)**
	Int. Stringer Rating	Controlling Limit State	
	0.97	**Design Shear**	**1 - (0)**
Operating	Ext. Stringer Rating	Controlling Limit State	
	1.76	**Design Flexure**	**1 - (50)**
	Int. Stringer Rating	Controlling Limit State	
	1.61	**Design Shear**	**1 - (0)**
Permit	Ext. Stringer Rating	Controlling Limit State	
	1.24	**Design Flexure**	**1 - (50)**
	Int. Stringer Rating	Controlling Limit State	
	1.23	**Design Flexure**	**1 - (50)**

Table 6-3 Existing Condition Load Factor Rating Summary (Stringers)

	Existing Bridge Condition		
Inventory	End Floor beam Rating	Controlling Limit State	Location Span - (%)
	1.196	**Design Flexure**	**1 - (50)**
	Intermediate Floor beam Rating	Controlling Limit State	
	0.979	**Design Flexure**	**1 - (50)**
Operating	End Floor beam Rating	Controlling Limit State	
	1.997	**Design Flexure**	**1 - (50)**
	Intermediate Floor beam Rating	Controlling Limit State	
	1.634	**Design Flexure**	**1 - (50)**
Permit	End Floor beam Rating	Controlling Limit State	
	1.53	**Design Flexure**	**1 - (50)**
	Intermediate Floor beam Rating	Controlling Limit State	
	1.185	**Design Flexure**	**1 - (50)**

Table 6-4 Existing Condition Load Factor Rating Summary (Floor beams)

6.2. Structural Assessment Findings

The inadequate vertical clearance is one of the factors leading to a low condition rating value and the functionally obsolete classification. This can be corrected by reconfiguring the knee brace at the portal frame. Another factor was the narrow deck width which can be corrected by changing the bridge from two lanes to a single lane configuration since the current and projected volume of traffic are low based on the Level of Service.

Typical corrosion of the steel members and local deformation of members as of result of vehicle impact in the past are typical damage noticed during the inspection. Unsealed joints at the abutments and poor drainage system are the main cause of the corrosion and deterioration of the deck underside, stringers, floor beams, bottom lateral braces, and vertical truss members. The deck underside had spalls and delaminated areas with exposed and corroded reinforcing bars.

The gusset plates in the floor system had section loss due to inadequate drainage. The underside of the deck had spall and delaminated area with exposed and corroded reinforcing bars. The top of deck had cracks in various locations along the bridge.

The existing bridge rails consist of flexible longitudinal element with rigid posts. There were a few signs of vehicular hits. These existing bridge rails do not meet current design crash collision standard. Furthermore, the rails are too short to protect the vertical and diagonal truss members effectively.

The riding surface of the bridge has large potholes that have been repaired and is showing signs of developing new potholes. Cracks were visible throughout the asphalt surface.

6.2.1. Superstructure

Deck

The top of the deck had potholes and cracks all over the place. Visible transverse cracks can be seen in Photo D-1.

Photo D-1: Abutment 1

Photo D-2: Abutment 2

Bridge Rail

The pedestrian rail was in fair condition. Corrosion was visible and some rail splices were missing.

Photo R-1: Pedestrian Rail

Curb/Sidewalk

The side was in fair condition. Visible separation at the sidewalk joints was visible in a few locations as shown in photo C-1.

Photo C-1: Gap in the sidewalk

Truss Members

Photo T-1: North approach

Photo T-2: Lower portion of the bridge showing bracing, floor beams, and stringers.

Photo T-3: Lower portion of the bridge showing bracing, floor beams, and stringers.

Photo T-4: Damaged gusset plate

Photo T-5: Damaged gusset plate

Photo T-6: Bottom lateral bracing, floor beams, and stringers

Photo T-7: Bottom lateral bracing, floor beams, stringers, and end diaphragm.

Photo T-8: Close-up photo of corroded stringer.

Photo T-9: Upper vertical and diagonal members

Photo T-10: Diagonal member at the portal

Photo T-11: Top lateral bracing and connections between truss members.

Photo T-12: Damaged vertical truss member.

Photo T-13: Damaged vertical truss member.

Photo T-14: Damaged diagonal truss member.

Photo T-15: Damaged vertical truss member.

Photo T-16: Damaged diagonal truss member.

Expansion Joints

Expansion joints appeared to be in good condition on the south abutment.

Photo E-1: South expansion joint

6.2.2. Substructure

Bearings

Existing rocker bearings appeared to be in good condition based on the visual assessment from the pedestrian trail but they are not based on closer inspection by others.

B-1: Typical Bearing

Abutments

Abutments appeared to be in good condition with no signs of cracks or extensive damage but other inspection report indicated that the parapet was broken. The visual inspection was obstructed by piles or earth and the end floor beam. This damage is possibly caused by the jammed roller nest causing the truss to push the abutment into the approach fill (passive reaction breaking the parapet).

AB-1: Abutment with slope pavement.

6.3. Rehabilitation Evaluation

6.3.1. Rehabilitation Alternatives

Level A - Minimal Rehabilitation

Structurally Deficient or Functionally Obsolete Evaluation

- Maintain current traffic configuration with a small increase of bridge width by providing new bridge rails and curbs.

Superstructure

Deck
- Replace deck with increased crown.
- Provide waterproof membrane and add 3-in of asphalt.
- Construct approach slab to tie to the deck and move expansion joints to end of approach slabs.
- Provide expansion joints at the end of the approach slabs.
- Add 8-in drain pipe extending beyond the lower bracing members.

Railing
- Replace traffic rail with a bridge rail with appropriate height to protect the truss members and provide splash protection.
- Wash and treat the existing pedestrian rail with chloride remover.
- Replace the missing top pipe joint straps.
- Use encapsulating paint system to coat the existing pedestrian rail.
- Replace damaged or broken pipe railing at the approaches.
- Add a concrete glare screen to the top of the existing bridge rail to serve as a splash guard on the east side of the adjacent bridge.

Curb
- Treat surface with corrosion inhibitor and concrete sealer on sidewalk.
- Fill hole at the approach end.

Stringers
- Discard stringers classified as condition 4 or 5 which will involve resetting some of the stringers that are in better condition.
- Stringer lines B, D, E, and G should remain present.
- Wash and treat remaining stringers with chloride remover.

Floor beams
- Wash and threat corroded members with chloride remover.
- Install or replace doublers on plates classified as condition state 5 in the inspection report.
- Replace any broken or heavily corroded rivets with high-strength bolts.
- Spot paint using an encapsulating paint system in areas classified as condition state 4 or 5 in the inspection report.

Lower chord and truss members below the deck
- Wash and threat corroded members with chloride remover.

- Install or replace doublers on plates classified as condition state 5 in the inspection report.
- Replace any broken or heavily corroded rivets with high-strength bolts.
- Spot paint areas with condition states 3, 4, and 5 using an encapsulating paint system.

Bottom lateral brace system
- Wash and threat corroded members with chloride remover.
- Install doubler over holes in lateral brace system gussets at L2, L4, L6, L10, and L14.
- Replace any broken or heavily corroded rivets with high-strength bolts.
- Spot paint the braces and gusset plates in areas with R2 corrosion level using an encapsulating paint system.

Upper chords, truss and bracing members above the deck
- Wash the members up to 5-ft above the deck level.
- Bolt angles to L0M1 and M15L16 end posts to strengthen the end post for the HL93 load.
- Threat with chloride remover.
- Replace any broken or heavily corroded rivets with high-strength bolts.
- Straighten diagonal U4L6 and add doubler plate. Replace affected rivets with high-strength bolts.
- Spot paint as needed using an encapsulating paint system in areas classified as condition state 4.

Bearings

- Clear all the debris.
- Treat with chloride remover.
- Replace the broken/loose roller bolts. Temporary jacking of the bridge may be needed.
- Use a encapsulating paint system to coat the bearings.
- Install zerks and lubricate pins at both the expansion and fixed bearings.

Substructure

- Clean and treat with corrosion inhibitor and concrete sealer to the abutment surfaces.

Level B - Intermediate Rehabilitation

Structurally Deficient or Functionally Obsolete Evaluation

- Provide new bridge rails and curbs.
- Check the Level of Service to ascertain if changing the roadway configuration to single lane traffic is adequate for current and future traffic volume.
- Modify the knee brace at the portal frame to gain vertical clearance.

Superstructure

Deck
- Replace deck with increased crown.
- Provide waterproof membrane and add 3-in of asphalt.
- Construct approach slab to tie to the deck and move expansion joints to end of approach slabs.
- Provide expansion joints at the end of the approach slabs.
- Add 8-in drain pipe extending beyond the lower bracing members.

Railing

- Replace traffic rail with a bridge rail with appropriate height to protect the truss members and provide splash protection.
- Wash and treat the existing pedestrian rail with chloride remover.
- Replace the missing top pipe joint straps.
- Sandblast and metalize areas with R3 and R4 rust corrosion level.
- Use encapsulating paint system to coat the existing pedestrian rail.
- Replace damaged or broken pipe railing at the approaches.
- Add a concrete glare screen to the top of the existing bridge rail to serve as a splash guard on the east side of the adjacent bridge.
- Use 30-ft of the 54-in bridge rail transition segment without height transition on the approach rails.

Curb

- Mill sidewalk.
- Treat surface with corrosion inhibitor and concrete sealer on sidewalk.
- Add small 4-inx4-in curb on inside and small drain pipes at each Bay adjacent to the curb.
- Provide approach slab at the end of the sidewalk.

Stringers

- Discard stringers classified as condition 4 or 5 which will involve resetting some of the stringers that are in better condition.
- Stringer lines B, D, E, and G should remain present.
- Wash and treat remaining stringers with chloride remover.
- Spot paint using an encapsulating paint system in areas classified as condition state 3 in the inspection report.

Floor beams

- Wash and threat corroded members with chloride remover.
- Install or replace doublers on plates classified as condition state 5 in the inspection report.
- Replace any broken or heavily corroded rivets with high-strength bolts.
- Spot paint using an encapsulating paint system in areas classified as condition state 3, 4 or 5 in the inspection report.

Lower chord and truss members below the deck

- Wash and threat corroded members with chloride remover.
- Install or replace doublers on plates classified as condition state 5 in the inspection report.
- Replace any broken or heavily corroded rivets with high-strength bolts.
- Paint entire lower brace system using encapsulating paint system.

Bottom lateral brace system

- Wash and threat corroded members with chloride remover.
- Install doubler over holes in lateral brace system gussets at L2, L4, L6, L10, and L14.
- Replace any broken or heavily corroded rivets with high-strength bolts.
- Paint entire lower brace system using encapsulating paint system.

Upper chords, truss and bracing members above the deck

- Wash the members up to 5-ft above the deck level.
- Bolt angles to L0M1 and M15L16 end posts to strengthen the end post for the HL93 load.
- Threat with chloride remover.
- Replace any broken or heavily corroded rivets with high-strength bolts.
- Straighten diagonal U4L6 and add doubler plate. Replace affected rivets with high-strength bolts.
- Paint all components using an encapsulating paint system.

Bearings

- Clear all the debris.
- Treat with chloride remover.
- Replace the broken/loose roller bolts. Temporary jacking of the bridge may be needed.
- Use a encapsulating paint system to coat the bearings.
- Install zerks and lubricate pins at both the expansion and fixed bearings.

Substructure

- Clean and treat with corrosion inhibitor and concrete sealer to the abutment surfaces.

Level C - Extensive Rehabilitation

Structurally Deficient or Functionally Obsolete Evaluation

- Provide new bridge rails and curbs.
- Check the Level of Service to ascertain if changing the roadway configuration to single lane traffic is adequate for current and future traffic volume.
- Modify the knee brace at the portal frame to gain vertical clearance.

Superstructure

Deck
- Replace deck with increased crown with longitudinal camber.
- Provide shear connectors on the floor beams for composite action.
- Provide waterproof membrane and add 3-in of asphalt.
- Construct approach slab to tie to the deck and move expansion joints to end of approach slabs.
- Provide expansion joints at the end of the approach slabs.
- Drain with boxes at all four corners.

Railing
- Replace traffic rail with a bridge rail with appropriate height to protect the truss members and provide splash protection.
- Wash and treat the existing pedestrian rail with chloride remover.
- Replace the missing top pipe joint straps.
- Sandblast and metalize areas with R3 and R4 rust corrosion level.
- Use encapsulating paint system to coat the existing pedestrian rail.
- Replace damaged or broken pipe railing at the approaches.
- Add a concrete glare screen to the top of the existing bridge rail to serve as a splash guard on the east side of the adjacent bridge.
- Use 30-ft of the 54-in bridge rail transition segment without height transition on the approach rails.

Curb
- Replace sidewalk with small curb each side.
- Use stainless steel reinforcing.
- Provide approach slab at the end of the sidewalk.

Stringers
- Discard stringers classified as condition 4 or 5 which will involve resetting some of the stringers that are in better condition.

- Stringer lines B, D, E, and G should remain present.
- Wash and treat remaining stringers with chloride remover.
- Paint all remaining stringers using encapsulating paint system.

Floor beams
- Add shear connectors.
- Wash and threat corroded members with chloride remover.
- Install or replace doublers on plates classified as condition state 5 in the inspection report.
- Replace any broken or heavily corroded rivets with high-strength bolts.
- Sandblast and metalize areas with condition state 4 or 5 in the inspection report.
- Paint all floor beams using encapsulating paint system.

Lower chord and truss members below the deck
- Wash and threat corroded members with chloride remover.
- Install or replace doublers on plates classified as condition state 5 in the inspection report.
- Replace any broken or heavily corroded rivets with high-strength bolts.
- Sandblast and metalize areas with condition state 4 or 5 in the inspection report.
- Paint entire lower brace system using encapsulating paint system.

Bottom lateral brace system
- Wash and threat corroded members with chloride remover.
- Install doubler over holes in lateral brace system gussets at L2, L4, L6, L10, and L14.
- Replace any broken or heavily corroded rivets with high-strength bolts.
- Sandblast and metalize the gusset plates lower chord connections.
- Paint entire lower brace system using encapsulating paint system.

Upper chords, truss and bracing members above the deck
- Wash the members up to 5-ft above the deck level.
- Bolt angles to L0M1 and M15L16 end posts to strengthen the end post for the HL93 load.
- Threat with chloride remover.
- Replace any broken or heavily corroded rivets with high-strength bolts.
- Straighten diagonal U4L6 and add doubler plate. Replace affected rivets with high-strength bolts.
- Straighten any bent members where the bend shifts the centroid of the member more than 25% of the radius of gyration.
- Paint all components using an encapsulating paint system.

<u>Bearings</u>

- Clear all the debris.
- Treat with chloride remover.
- Replace the broken/loose roller bolts. Temporary jacking of the bridge may be needed.
- Use a encapsulating paint system to coat the bearings.
- Install zerks and lubricate pins at both the expansion and fixed bearings.

<u>Substructure</u>

- Clean and treat with corrosion inhibitor and concrete sealer to the abutment surfaces.
- Rebuild the parapet.

6.3.2. Load Capacity Analysis of Rehabilitation Alternatives

Load capacity analyses using LRFR method were evaluated for each of the rehabilitation alternatives with the following consideration:

Level A – Minimum Rehabilitation
The inventory rating shall be at least 0.77 HL93 on a strength basis. The permit vehicle shall be evaluated to carry a single lane mixed with traffic with 20% impact.

Level B – Intermediate Rehabilitation
The inventory rating shall be at least 0.85 HL93 on strength basis. The permit vehicle shall be evaluated to carry a single lane mixed with traffic with 20% impact. Exterior girder may be evaluated as single trip mixed with traffic basis for those bridges with shoulders.

Level C – Extensive Rehabilitation
The inventory rating shall be at least 0.95 HL93 on strength basis. The permit vehicle shall be evaluated to carry a single lane mixed with traffic with 20% impact. Exterior girder may be evaluated as single trip mixed with traffic basis for those bridges with shoulders.

Below table is a summary of the rating values for each alternative:

Truss Members

	Level A Rehabilitation		
Inventory	Ext. Truss Rating	Controlling Limit State	Location Span - (%)
	0.81	**Axial - Compression**	**M15L16**
Operating	Ext. Truss Rating	Controlling Limit State	Location Span - (%)
	1.34	**Axial - Compression**	**M15L16**
Permit	Ext. Truss Rating	Controlling Limit State	Location Span - (%)
	0.94	**Axial - Compression**	**M15L16**
	Level B Rehabilitation		
Inventory	Ext. Truss Rating	Controlling Limit State	Location Span - (%)
	0.80	**Axial - Compression**	**M15L16**
Operating	Ext. Truss Rating	Controlling Limit State	Location Span - (%)

	1.34	**Axial - Compression**	**M15L16**
Permit	Ext. Truss Rating	Controlling Limit State	Location Span - (%)
	0.94	**Axial - Compression**	**M15L16**
	Level C Rehabilitation		
Inventory	Ext. Truss Rating	Controlling Limit State	Element Name
	0.79	**Axial - Compression**	**M15L16**
Operating	Ext. Truss Rating	Controlling Limit State	Location Span - (%)
	1.31	**Axial - Compression**	**M15L16**
Permit	Ext. Truss Rating	Controlling Limit State	Location Span - (%)
	0.92	**Axial - Compression**	**M15L16**

Note: Values above were based on LFR. Rating values need to be converted to LRFR and HL93. Strengthening of member will be needed by providing 3x3x5/16 angles.

Floor beams

	Level A Rehabilitation		
Inventory	End Floor beam Rating	Controlling Limit State	Location Span - (%)
	1.168	**Design Flexure**	**1 - (50)**
	Intermediate Floor beam Rating	Controlling Limit State	Location Span - (%)
	0.914	**Design Shear**	**1 - (0)**
Operating	End Floor beam Rating	Controlling Limit State	Location Span - (%)
	1.95	**Design Flexure**	**1 - (50)**
	Intermediate Floor beam Rating	Controlling Limit State	Location Span - (%)
	1.526	**Design Shear**	**1 - (0)**
Permit	End Floor beam Rating	Controlling Limit State	Location Span - (%)
	1.49	**Design Flexure**	**1 - (50)**
	Intermediate Floor beam Rating	Controlling Limit State	Location Span - (%)
	1.106	**Design Shear**	**1 - (0)**
	Level B Rehabilitation		
Inventory	End Floor beam Rating	Controlling Limit State	Location Span - (%)
	1.159	**Design Flexure**	**1 - (50)**
	Intermediate Floor beam Rating	Controlling Limit State	Location Span - (%)
	0.905	**Design Shear**	**1 - (0)**
Operating	End Floor beam Rating	Controlling Limit State	Location Span - (%)
	1.936	**Design Flexure**	**1 - (50)**
	Intermediate Floor beam Rating	Controlling Limit State	Location Span - (%)
	1.511	**Design Shear**	**1 - (0)**
Permit	End Floor beam Rating	Controlling Limit State	Location Span - (%)
	1.48	**Design Flexure**	**1 - (50)**
	Intermediate Floor beam Rating	Controlling Limit State	Location Span - (%)
	1.095	**Design Shear**	**1 - (0)**
	Level C Rehabilitation		
Inventory	End Floor beam Rating	Controlling Limit State	Location Span - (%)

	1.317	**Design Flexure**	**1 - (60)**
	Intermediate Floor beam Rating	Controlling Limit State	Location Span - (%)
	1.072	**Design Flexure**	**1 - (60)**
Operating	End Floor beam Rating	Controlling Limit State	Location Span - (%)
	2.199	**Design Flexure**	**1 - (60)**
	Intermediate Floor beam Rating	Controlling Limit State	Location Span - (%)
	1.79	**Design Flexure**	**1 - (60)**
Permit	End Floor beam Rating	Controlling Limit State	Location Span - (%)
	1.68	**Design Flexure**	**1 - (60)**
	Intermediate Floor beam Rating	Controlling Limit State	Location Span - (%)
	1.298	**Design Flexure**	**1 - (60)**

Note: Values above were based on LFR. Rating values need to be converted to LRFR and HL93. Strengthening or dead load reduction may be necessary depending on the results.

Stringers do not carry traffic loads with these rehabilitation levels. The deck spans between floor beams.

6.3.3. Quantities/Cost Estimates

The probable construction costs associated with each rehabilitation alternative and replacement were evaluated. The cost/SF/yr is based on the life expectancy of the level of rehabilitation. The life expectancy for Rehabilitation Levels A, B, C, and replacement options are 20, 30, 50, and 75 years, respectively. Below is a summary of the estimated costs for each alternative.

Level A Rehabilitation			***Level B Rehabilitation***		
Cost	Cost/SF	Cost/SF/yr	Cost	Cost/SF	Cost/SF/yr
$972,059	**$85.50**	**$4.28**	**$1,135,238**	**$99.86**	**$3.33**

Level C Rehabilitation			***Replacement***		
Cost	Cost/SF	Cost/SF/yr	Cost	Cost/SF	Cost/SF/yr
$1,311,150	**$115.33**	**$2.31**	**$2,089,793**	**$157.99**	**$2.11**

Rehabilitation to K-18-FF		
Cost	Cost/SF	Cost/SF/yr
$96,598	**$7.30**	**$0.10**

A summary of the quantities used to determine the probable construction cost for each alternative are located in the Appendix C.

6.3.4. Rehabilitation Alternative Evaluation

Long-Term Evaluation

The bridge is registered as a historic bridge and will remain until it is no longer a safe structure. The bridge could still operate and have a useful life with periodic maintenance. However, the extent of the useful life is a function of the level of rehabilitation.

Potential Risk and Other Factors

Rehabilitation criteria categories may not be clear cut, but longer life increases the benefit of greater functionality. A longer life provides a greater opportunity to recover the costs of a more extensive rehabilitation with reduced maintenance and deferred replacement expenses. Skipping one of the criteria may introduce a greater risk of a structure becoming dysfunctional over time.

Justifiable costs are based on rough equity to new bridge costs in 2012 prorated over the target life. Sometimes rehabilitation is justified on the simple basis that a replacement is impractical or something needs to be done fairly immediately at the time the evaluation for improvement is made. Rehabilitation may also be justified if some form of needed corridor change in the foreseeable future will make a new structure, or extensively rehabilitated structure obsolete before its time.

A bridge can be can be “poor” as indicated by the sufficiency rating of FO or SD for 10 or more years yet continue to function effectively depending on many factors. A deck with a condition rating of 4 may not present any operational problems, but indicates it is deteriorating towards condition rating 3 which will almost certainly have significant operational and maintenance problems. For example, bridge decks are

usually given a condition rating of 4 and classified as structurally deficient when there is significant evidence of delamination and reinforcing corrosion. Delamination alone has several risks:

- **Potholes in the surfacing**

  Potholes in the surface can be mitigated by a relatively thick bonded concrete topping (not patching) and/or an HBP overlay which can slow the development of pop-outs in the surfacing if not placed over broken-up or loose material. Heavy traffic tends to break up additional delamination quickly, while thicker topping and lighter traffic tends to have slower deterioration. Quality of the topping bond tends to retard deterioration. One mechanism for added potholes to form is the same as on roadway pavement: freezing water tapped within the pavement. Good drainage, dense waterproof topping materials and an absence of loose or porous material under the topping will reduce freezing-induced pop-outs. Every effort should be made to not trap porous material under the topping.

- **Falling concrete**

  Falling concrete can be mitigated by some sort of catcher. Note the risk associated with falling concrete may be more perceptual than significant as the result is seldom worse that it is with other debris in the road. Falling concrete may not be as significant risk as rock fall, which is tolerated as a risk.

- **Holes entirely through the deck**

  Holes entirely through the deck have a similar risk profile and mitigations to prevent potholes as potholes in the surfacing and falling concrete combined. If the reinforcing is still intact, the issue is that repair is an emergency situation. If the reinforcing is not intact the consequences to a vehicle can be more significant.

There are other risks that should be considered for rehabilitations with a significant expected life. Some of these risks may not be a priority due to lack of a prior problem with the particular structure and with similar structures. This may be sufficient to indicate the risk is somewhat low over the time periods the structure has been in service. These risks include the following:

- **Scour**

  Scour is major cause of bridge collapse. It is possible to improve scour conditions by maintenance and appropriate countermeasures. It is sometimes possible to change foundation types, but this is expensive and most appropriate in known problem spots. For a structure with less than the life of a new structure some risk in the superflood may be acceptable. Eliminating joints often reduces collapse risk by bracing supports against sidesway and preventing superstructure elements from floating off or falling off substructure.

- **Collision**

  Collision by trucks and trains is a significant cause of structure collapse. Risk tends to decrease with increasing clear zone and with increasing member strength. Many structures have sufficient redundancy to resist collapse with a member failure.

- **Earthquake**

Earthquakes are not generally a problem in Colorado, but all structures should have the superstructure effectively connected to the substructure, or sufficiently lap over the seat. Rockers under simple span ends are a high risk element (also for scour and collision), unless motions are effectively limited.

- **Overloading**

  Generally, HL93 strength operating capacity evaluated with realistic ADTT and other adjustment factors will provide a low risk of loading beyond design limits. In Colorado the permit vehicle also provides a check against an errant legal permitted vehicle causing damage.

- **Brittle Fracture**

  Many structures have a risk of brittle fracture, especially those with older steel. Built-up riveted structures normally have cracks stop at rivet holes, limiting strength loss. Wide-flange rolled structures are susceptible to brittle fracture, if they are from the pre-Charpy testing era and should be checked for sufficient redundancy (four or more parallel members if simple span). Concrete pier caps may be a problem, but if integral with two or more columns supporting a superstructure with redundancy, there is probably not a brittle collapse issue. If seemingly subject to brittle fracture, structures can be checked with plastic analysis (probably assuming one lane of HL93 or a permit vehicle and a load factor of 1.1 for DL and LL) with a member failed to a pinned condition at the assumed brittle fracture location.

6.3.5. Recommendations

Given the information presented in this chapter, it is recommended that this bridge follow Level A rehabilitation option which consists of minimal rehabilitation to the superstructure and substructure components. The cost estimates and load capacity meet the Level A rehabilitation criteria established in this report. The functional obsolete (FO) classification can be corrected by changing the striping to one lane and modifying the portal frame. The new deck, splash protection, paint, and slow deterioration rates should provide well over the nominal 20 year life for this type of rehabilitation, at least 30 years, probably more.

The adjacent bridge, K-18-FF, should also be rehabilitated to protect K-18-R. However, the rehabilitation will be minimal.

6.4. Conceptual Plans

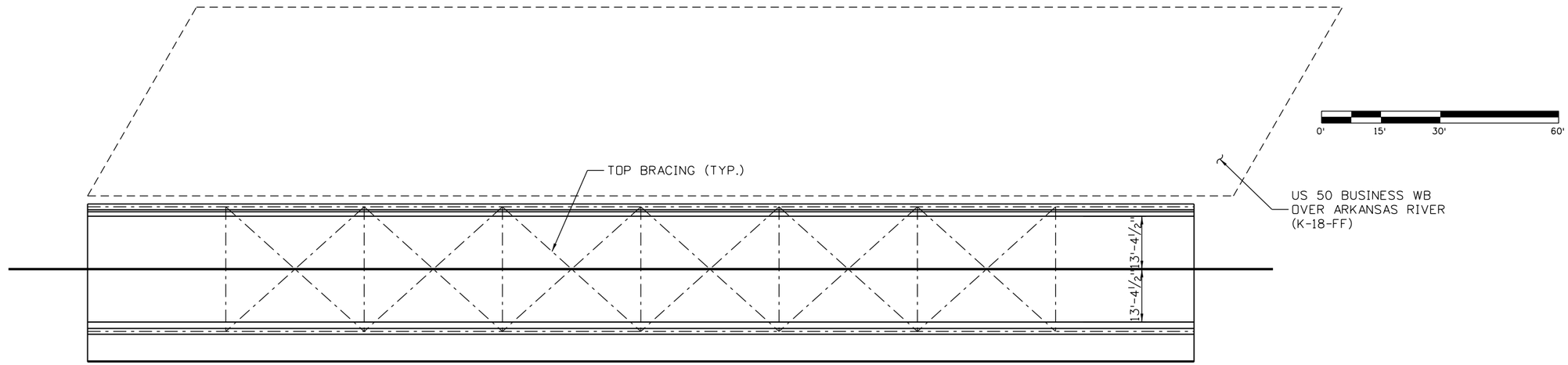

PLAN

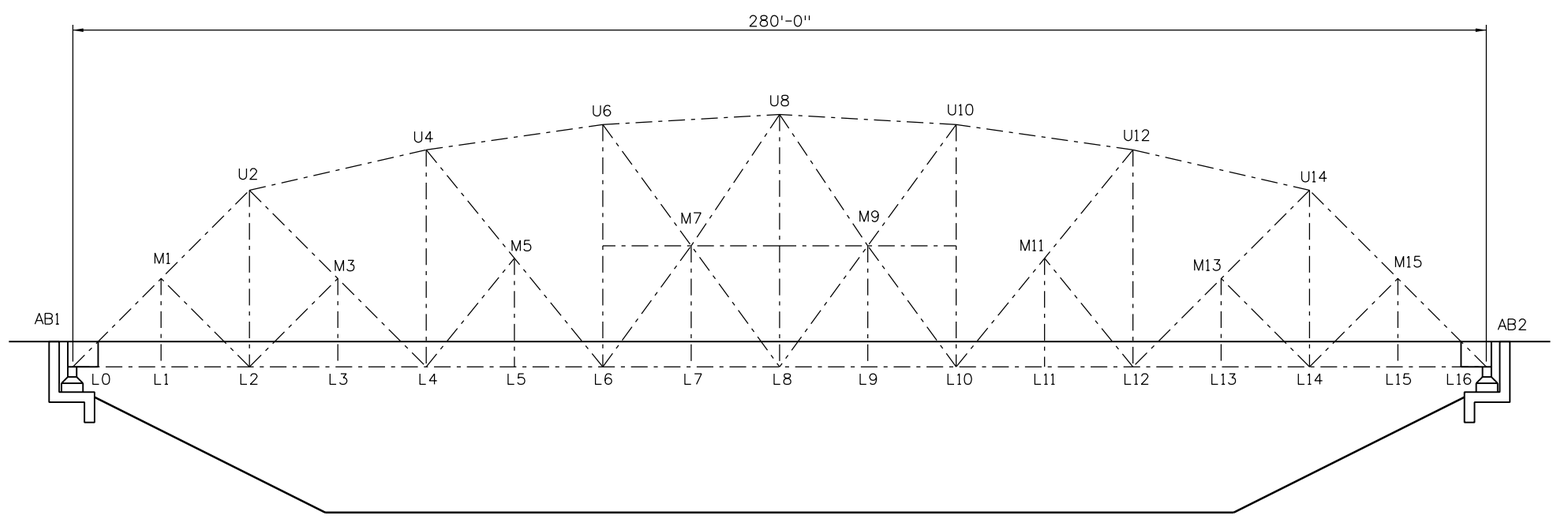

ELEVATION

Print Date: 12/17/2012	Sheet Revisions	Colorado Department of Transportation	As Constructed	US 50 BUSINESS EB OVER ARKANSAS RIVER GENERAL LAYOUT	Project No./Code
File Name: 19301BRDG_US50_GenLayout01.dgn	Date: / Comments / Init.	902 Erie Avenue, Pueblo, CO 81001, Phone: 719-546-5438 FAX: 719-546-5702	No Revisions:		
Horiz. Scale: 1:30 Vert. Scale:		Region 2	Revised:	Designer: / Structure Numbers: K-18-R	
ATKINS 4601 DTC Boulevard, Suite 700, Denver, CO 80237, Phone: (303) 221-7275 Fax: (303) 221-7276			Void:	Detailer: / Sheet Subset: / Subset Sheets: of	Sheet Number 1

24942 1:36:31 PM \\DENFS06\Trans\Tranproj\100031632 - R2 Rehab\19301\Consultants\Bridge\Drawings\19301BRDG_US50_GenLayout01.dgn

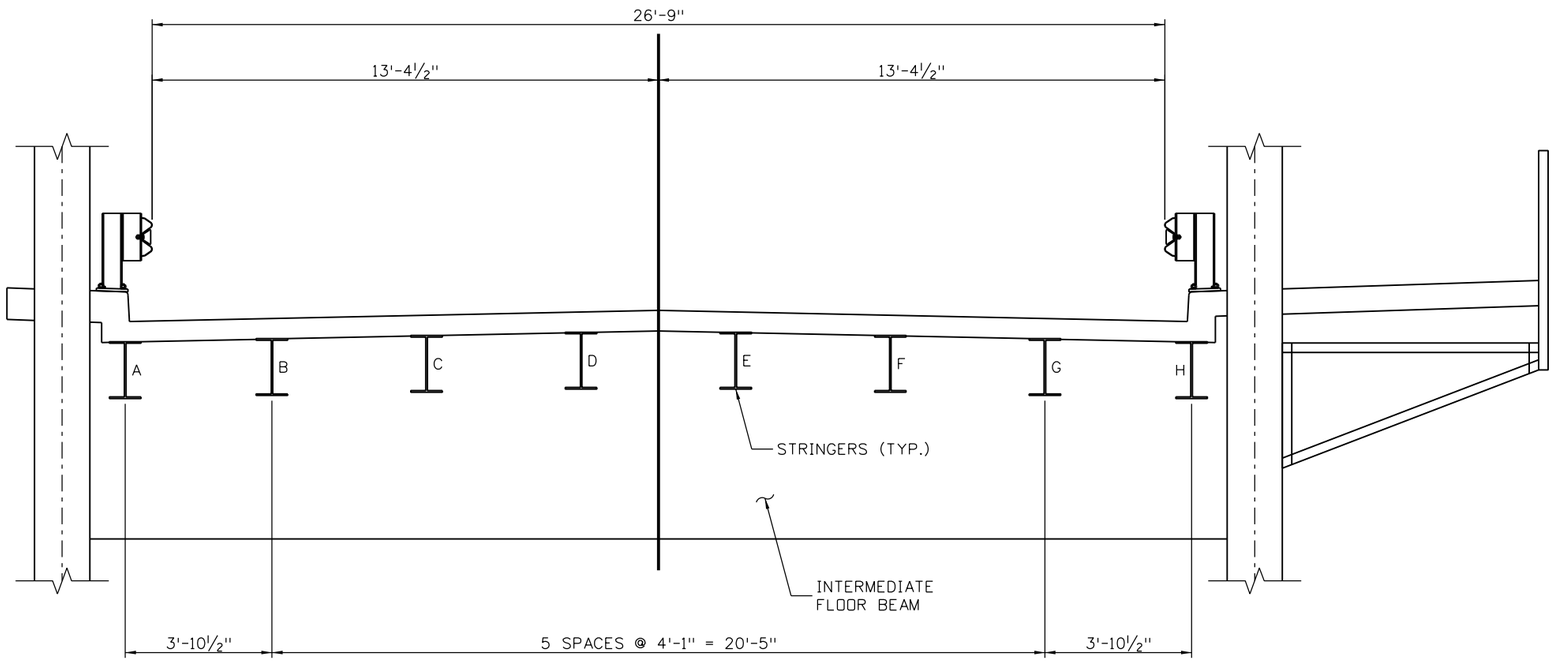

TYPICAL SECTION

(K-18-FF AND UTILITIES NOT SHOWN)

Print Date: 12/17/2012
File Name: 19301BRDG_US50_TypSec01.dgn
Horiz. Scale: 1:4 Vert. Scale:

ATKINS
4601 DTC Boulevard, Suite 700
Denver, CO 80237
Phone: (303) 221-7275 Fax: (303) 221-7276

Sheet Revisions		
Date:	Comments	Init.

Colorado Department of Transportation
DOT
DEPARTMENT OF TRANSPORTATION
902 Erie Avenue
Pueblo, CO 81001
Phone: 719-546-5438 FAX: 719-546-5702
Region 2

As Constructed
No Revisions:
Revised:
Void:

US 50 BUSINESS EB OVER
ARKANSAS RIVER
TYPICAL SECTION

Designer:
Detailer:
Sheet Subset:
Structure Numbers K-18-R
Subset Sheets: of

Project No./Code

Sheet Number 2

24942 1:36:35 PM \\DENFS06\Trans\Tranproj\100031632 - R2 Rehab\19301\Consultants\Bridge\Drawings\19301BRDG_US50_TypSec01.dgn

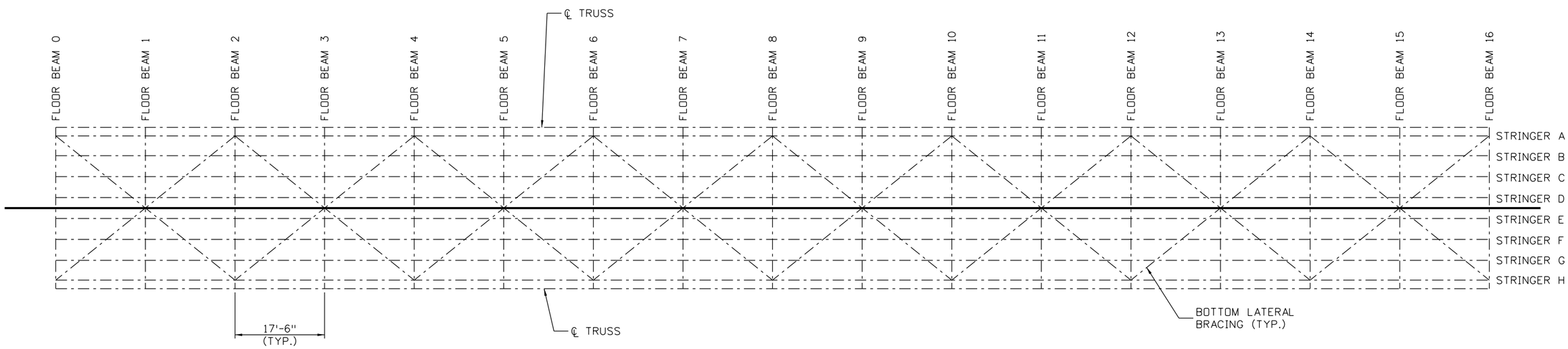

FRAMING PLAN

Print Date: 12/17/2012	Sheet Revisions	Colorado Department of Transportation	As Constructed
File Name: 19301BRDG_US50_FramePlan01.dgn	Date: / Comments / Init.	902 Erie Avenue, Pueblo, CO 81001	No Revisions:
Horiz. Scale: 1:20 Vert. Scale:		Phone: 719-546-5438 FAX: 719-546-5702	Revised:
ATKINS 4601 DTC Boulevard, Suite 700, Denver, CO 80237, Phone: (303) 221-7275 Fax: (303) 221-7276		Region 2	Void:

US 50 BUSINESS EB OVER ARKANSAS RIVER
FRAMING PLAN

Designer:
Detailer:
Sheet Subset:
Structure Numbers: K-18-R
Subset Sheets: of

Project No./Code

Sheet Number 3

24942 1:36:39 PM \\DENFS06\Trans\Tranproj\100031632 - R2 Rehab\19301\Consultants\Bridge\Drawings\19301BRDG_US50_FramePlan01.dgn

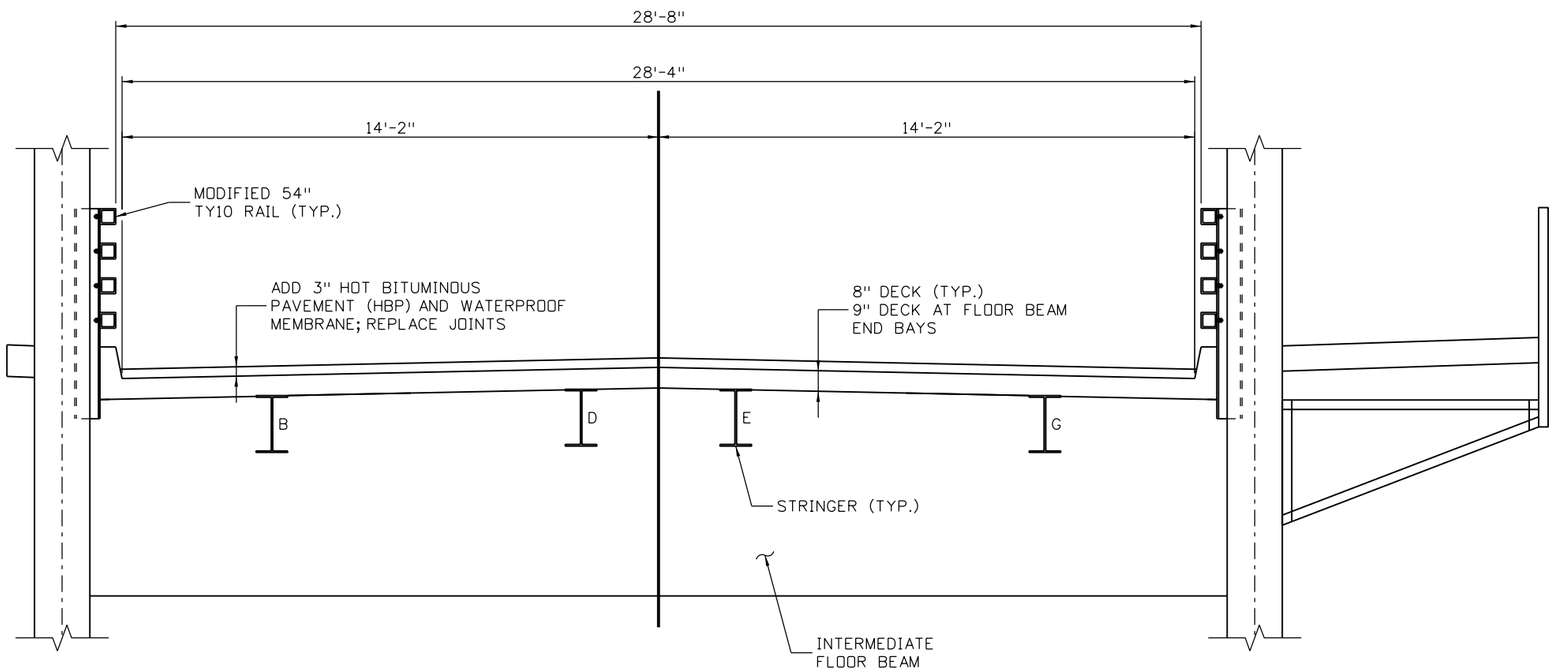

LEVEL A REHABILITATION TYPICAL SECTION

Print Date: 12/17/2012	Sheet Revisions	Colorado Department of Transportation	As Constructed
File Name: 19301BRDG_US50_TypSec02.dgn	Date: / Comments / Init.	902 Erie Avenue, Pueblo, CO 81001	No Revisions:
Horiz. Scale: 1:4 Vert. Scale:		Phone: 719-546-5438 FAX: 719-546-5702	Revised:
ATKINS 4601 DTC Boulevard, Suite 700, Denver, CO 80237, Phone: (303) 221-7275 Fax: (303) 221-7276		Region 2	Void:

US 50 BUSINESS EB OVER ARKANSAS RIVER REHAB. LEVELS SUPERSTRUCTURE (SHEET 1 OF 3)

Designer:	Structure Numbers	K-18-R
Detailer:		
Sheet Subset:	Subset Sheets: of	

Project No./Code

Sheet Number 4

24942 1:36:42 PM \\DENFS06\Trans\Tranproj\1000316 32 - R2 Rehab\19301\Consultants\Bridge\Drawings\19301BRDG_US50_TypSec02.dgn

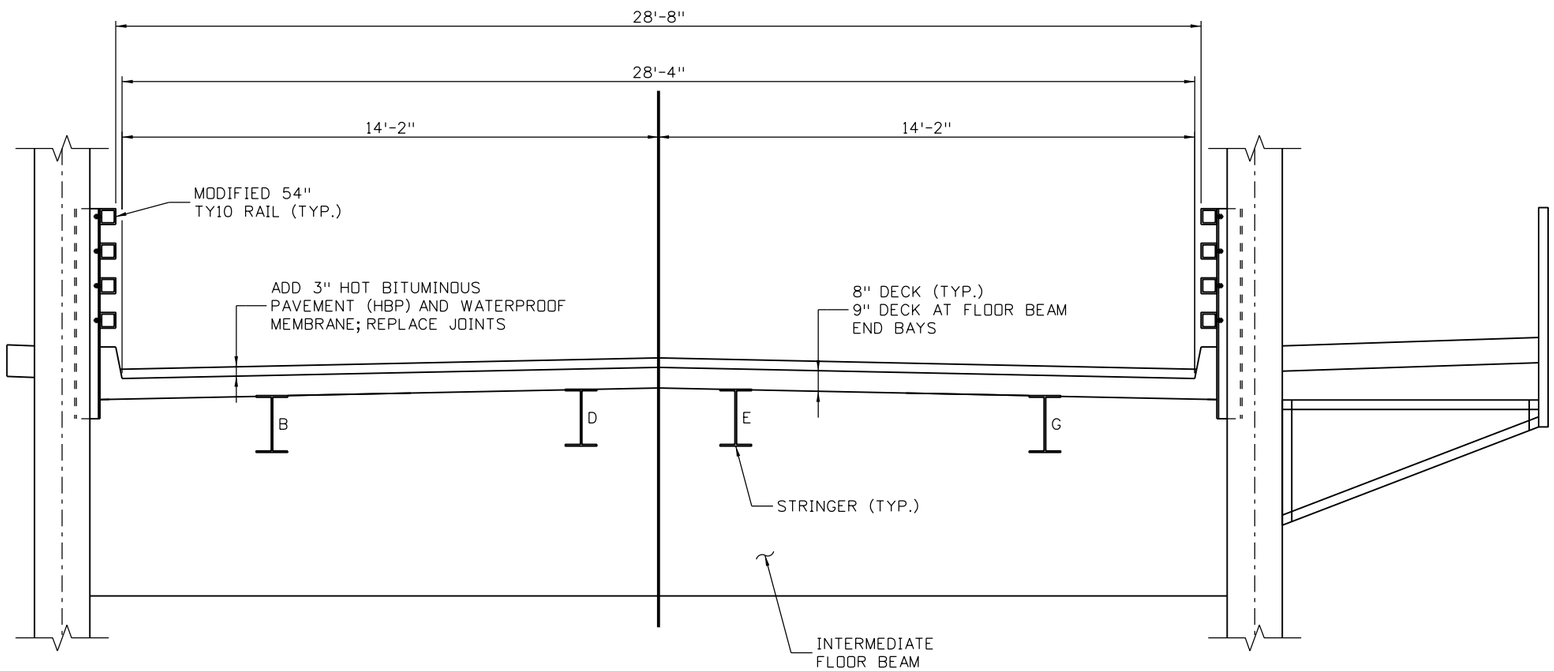

LEVEL B REHABILITATION TYPICAL SECTION

Print Date: 12/17/2012	Sheet Revisions	Colorado Department of Transportation	As Constructed
File Name: 19301BRDG_US50_TypSec03.dgn	Date: / Comments / Init.	902 Erie Avenue, Pueblo, CO 81001	No Revisions:
Horiz. Scale: 1:4 Vert. Scale:		Phone: 719-546-5438 FAX: 719-546-5702	Revised:
ATKINS 4601 DTC Boulevard, Suite 700, Denver, CO 80237, Phone: (303) 221-7275 Fax: (303) 221-7276		Region 2	Void:

US 50 BUSINESS EB OVER ARKANSAS RIVER REHAB. LEVELS
SUPERSTRUCTURE (SHEET 2 OF 3)

Designer:	Structure Numbers	K-18-R
Detailer:		
Sheet Subset:	Subset Sheets: of	

Project No./Code

Sheet Number 5

24942 1:36:45 PM \\DENFS06\Trans\Tranproj\1000316 32 - R2 Rehab\19301\Consultants\Bridge\Drawings\19301BRDG_US50_TypSec03.dgn

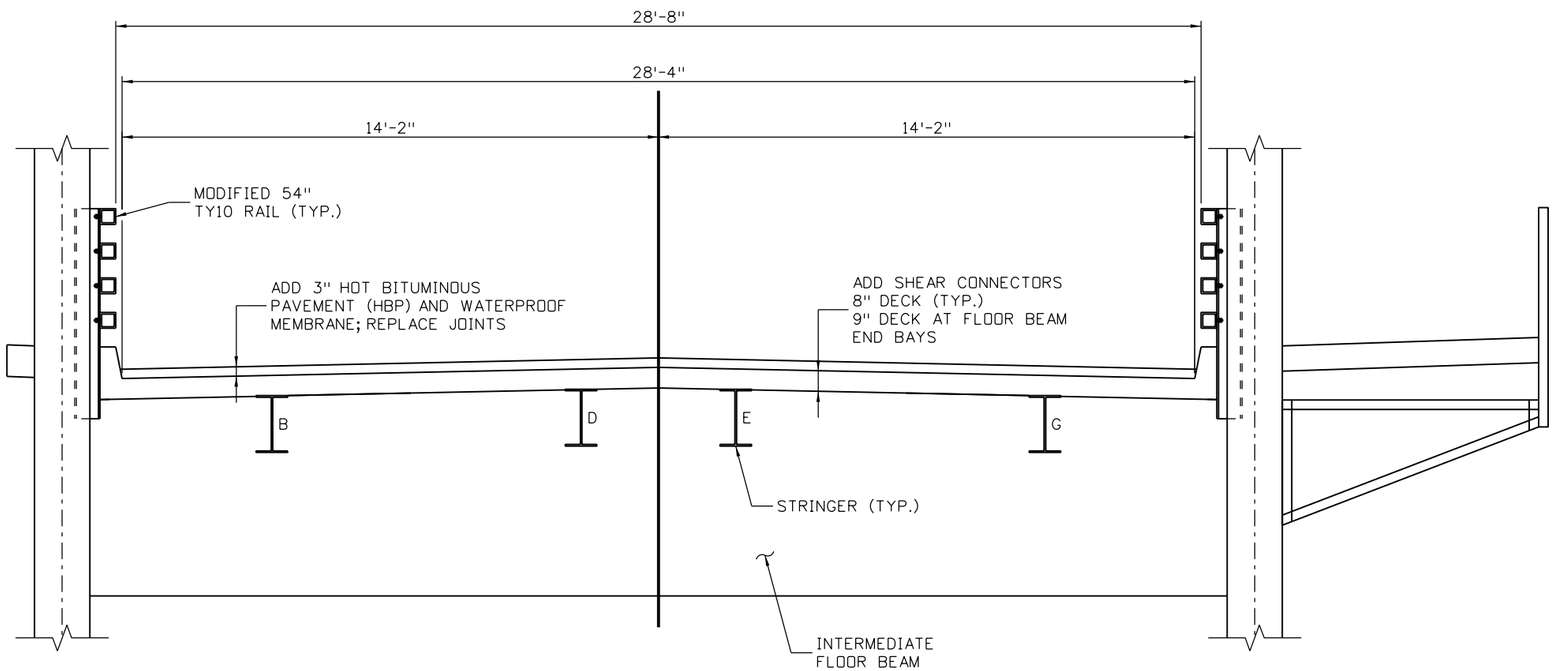

LEVEL C REHABILITATION TYPICAL SECTION

Print Date: 12/17/2012	Sheet Revisions	Colorado Department of Transportation	As Constructed
File Name: 19301BRDG_US50_TypSec04.dgn	Date: / Comments / Init.	902 Erie Avenue, Pueblo, CO 81001	No Revisions:
Horiz. Scale: 1:4 Vert. Scale:		Phone: 719-546-5438 FAX: 719-546-5702	Revised:
ATKINS 4601 DTC Boulevard, Suite 700, Denver, CO 80237, Phone: (303) 221-7275 Fax: (303) 221-7276		Region 2	Void:

US 50 BUSINESS EB OVER ARKANSAS RIVER REHAB. LEVELS SUPERSTRUCTURE (SHEET 3 OF 3)

Designer:	Structure Numbers	K-18-R
Detailer:		
Sheet Subset:	Subset Sheets: of	

Project No./Code

Sheet Number 6

24942 1:36:48 PM \\DENFS06\Trans\Tranproj\1000316 32 - R2 Rehab\19301\Consultants\Bridge\Drawings\19301BRDG_US50_TypSec04.dgn

CHAPTER 7

I-25 NB and SB over Indiana Avenue Bridges

(L-18-M and L-18-W)

(CHAPTER IN PROGRESS)

7.1. Existing Bridge Condition

7.1.1. Description of Structure

The 123-ft long parallel bridges, built in 1956, consist of three spans, non-composite, wide flange steel girders, carrying I-25 traffic over Indiana Avenue. The bridge piers and abutments have skews of 1 degree (L-18-W) and 2 degrees (L-18-M), respectively. The span lengths are 36'-0", 51'-0", and 36'-0" measured between centerline of bearings. The curb-to-curb width is 30-ft providing two traffic lanes, 3-ft shoulders, and traffic rails. The deck consists of cast-in-place concrete with an asphalt overlay.

Photo 7-1: Elevation View (Looking Northwest)

The spans are comprised of three continuous steel wide flange rolled girders, 27WF94, spaced at 7'-6". Intermediate and diaphragms consisting of channel members are located in all the Bays. Span 2 is considered composite due to the presence of channel shear connectors. The intermediate diaphragms are located at mid-spans for Spans 1 and 3 and third points for Span 2. Rocker bearings are present at the end of the girder units. The minimum vertical clearance is approximately 16.2-ft and 16.9-ft for the northbound and southbound bridges, respectively.

The reinforced concrete piers are composed of two square columns supported on individual pile supported footings. The column section varies linearly from the base. Abutments 1 and 4 are pile supported abutments with concrete slope pavement.

The annual average daily traffic (AADT) for each bridge was 19,300 vehicles, with 8% truck traffic, in 2007 and is projected to be 25,476 vehicles in 2027. The roadway functional classification is an urban interstate principal arterial system.

General Layout, Framing Plan, and Typical Section drawings of the existing bridge are located in section 7.4.

7.1.2. Sufficiency, Condition, and Appraisal Rating Summary

The I-25 NB over Indiana Avenue Bridge (L-18-M) has a sufficiency rating of 26.6 and appraised a structurally deficient; whereas the I-25 SB over Indiana Avenue Bridge (L-18-W) has a sufficiency rating 46.8 and it was classified as functionally obsolete based on the latest bridge inspection reports(see Table 7-1).

Bridge Name	Bridge Designation	Sufficiency Rating	Structurally Deficient?	Functionally Obsolete?	Deck (Item 58)	Superstructures (Item 59)	Substructures (Item 60)	Structural Condition (Item 67)	Deck Geometry (Item 68)	Underclearances (Item 69)	Waterway Adequacy (Item 71)	Approach Roadway Alignment (Item 72)
I-25 NB over Indiana Ave.	L-18-M	26.6	YES		4	5	4	4	2	4	N	8
I-25 SB over Indiana Ave.	L-18-W	46.8		YES	5	5	5	4	2	4	N	8

Structurally Deficient
1. A condition rating of 4 or less for
Item 58 - Deck or
Item 59 - Superstructures or
Item 60 - Substructures or
Item 62 - Culvert and Retaining Walls or
2. An appraisal of 2 or less for
Item 67 - Structural Condition or
Item 71 - Waterway Adequacy

Functionally Obsolete
1. An appraisal rating of 3 or less for
Item 68 - Deck Geometry or
Item 69 - Underclearances or
Item 72 - Approach Roadway Alignment or
2. An appraisal of 3 or less for
Item 67 - Structural Condition or
Item 71 - Waterway Adequacy

Any bridge classified as structurally deficient is excluded from the functionally obsolete category.

Table 7-1 Sufficiency, Condition, and Appraisal Rating Summary

The comprehensive evaluation of the condition ratings for the Deck (Item 58), Superstructure (Item 59), and Substructure (Item 60) dating back to the 1970s revealed that the deterioration rate of the bridge has been steady. The current deficiencies have been present as far as 20 years ago. A detailed matrix of the deterioration rate can be found in Appendix B.

7.1.3. Load Capacity Analysis

According to the 2010 bridge inspection report for L-18-M Bridge, the operating and inventory ratings using load factor method were 34.7 and 20.8, respectively. The operating and inventory ratings using load factor method for L-18-W were 35.8 and 21.5, respectively.

Load capacity analysis for the existing condition using the Load and Resistance Factor Rating (LRFR) method was evaluated for the bridge and the results are summarized below.

	Existing Bridge Condition		
Inventory	Ext. Girder Rating	Controlling Limit State	Location Span - (%)
	Int. Girder Rating	Controlling Limit State	Location Span - (%)
Operating	Ext. Girder Rating	Controlling Limit State	Location Span - (%)
	Int. Girder Rating	Controlling Limit State	Location Span - (%)
Permit	Ext. Girder Rating	Controlling Limit State	Location Span - (%)
	Int. Girder Rating	Controlling Limit State	Location Span - (%)

Table 7-3 Existing Condition Load and Resistance Factor Rating Summary for L-18-M

	Existing Bridge Condition		
Inventory	Ext. Girder Rating	Controlling Limit State	Location Span - (%)
	Int. Girder Rating	Controlling Limit State	Location Span - (%)
Operating	Ext. Girder Rating	Controlling Limit State	Location Span - (%)
	Int. Girder Rating	Controlling Limit State	Location Span - (%)
Permit	Ext. Girder Rating	Controlling Limit State	Location Span - (%)
	Int. Girder Rating	Controlling Limit State	Location Span - (%)

Table 7-3 Existing Condition Load and Resistance Factor Rating Summary for L-18-W

7.2. Structural Assessment Findings

A visual assessment of the bridge showed typical corrosion damage of the cross frame members and steel rolled girders over the piers associated with the damage to the joints and deck.

Joints at Abutments 1 and 4, Piers 2 and 3 are unsealed and the probable cause of much of the deterioration to the deck bottom, girders, cross frame members, pier cap, and columns.

The underside of the deck had spalls and delaminated areas with exposed and corroded reinforcing bars. The pier caps exhibited concrete section loss exposing the longitudinal reinforcing bars and stirrups. The concrete deck slab damage is mostly at the deck joints and the longitudinal construction joint. Superficial transverse cracks were visible in a few locations. Based on previous inspection reports, the deck bottom deterioration has been present for at least the last two decades with very little change over time. The bottom of deck appeared sound with some scaling and efflorescence.

The deterioration of the steel girders and cross frames are related to the leaking deck joints at Piers 2 and 3.

Delamination and concrete spalls due to the deficiency in the concrete deck were visible on the Pier 2 columns. The low condition rating for substructure is caused by the deteriorated condition of the unsealed expansion joints at Piers 2 and 3.

7.2.1. Superstructure

Deck

Bridge Rail

Curb/Sidewalk

Girders

Expansion Joints

7.2.2. Substructure

Bearings

Abutments

Abutments appeared to be in good condition with no signs of cracks or extensive damage.

Piers

Retaining Walls

Retaining walls appeared to be in good condition.

7.3. Rehabilitation Evaluation

7.3.1. Rehabilitation Alternatives

Widening to the inside of the bridges is necessary in order to provide adequate space for rehabilitation of these bridges. The closed median will be use to shift K-18-AX traffic over in order to facilitate repair work. The widening will require the removal of the inside curbs, provide new girder lines and substructure components.

Level A - Minimal Rehabilitation

Structurally Deficient or Functionally Obsolete Evaluation

- Close the median and connect to the adjacent bridge (L-18-W) to clear deck geometry issues and provide adequate space during the rehabilitation of the bridge.
- Rehab the deck. The very thin deck with raised gutters will require some milling and concrete overlay.

Superstructure

- Use penetrating corrosion inhibitor top and bottom deck.
- Remove 3-ft minimum strip at the pier joints and provide reinforcement to lap existing steel. Patch the strip to match the existing deck.
- Apply concrete sealer on curb.
- Mill raised gutter off, and mill some of cover off remainder of deck. Remove loose delams. Place a 2.5” minimum Concrete Class DT (Deck Topping) concrete overlay on top of the concrete deck and provide waterproofing membrane and Hot Bituminous Pavement (HBP).
- Optional wash and paint all girders using encapsulating paint for the areas classified as CS3 in the inspection reports. The wash and painting also apply to the diaphragms and bearings.

Substructure

- Remove all loose and delaminated concrete from the caps and columns.
- Replace reinforcing with significant section loss.
- Treat the pier caps and columns with corrosion inhibitor and concrete sealer.
- Patch the removed areas. Wrap with FRP if the damaged is extensive.

Level B - Intermediate Rehabilitation

Structurally Deficient or Functionally Obsolete Evaluation

- Rehabilitate the deck.
- Close the median and connect to the adjacent bridge (L-18-W) to clear deck geometry issues and provide adequate space during the rehabilitation of the bridge. Perform an in-depth rehabilitation of the deck.

Superstructure

- Remove asphalt with Class 1 removal on entire deck, except in areas needing Class 2 and 3 removals, before applying the corrosion inhibitor. Add 2.5 in min. of DT concrete with stainless mesh.
- Treat the curbs with corrosion inhibitor.
- Consider topcoat paint on remainder of exterior girders.

Substructure

- Remove all loose and delaminated concrete from the cap and columns.
- Replace reinforcing with significant section loss.
- Treat the pier caps and columns with corrosion inhibitor.
- Wrap the severe and moderately patched caps and columns with FRP.

Level C - Extensive Rehabilitation

Structurally Deficient or Functionally Obsolete Evaluation

- Close the median and connect to the adjacent bridge (L-18-W) to clear deck geometry issues and provide adequate space during the rehabilitation of the bridge.
- Replace the decks

Superstructure

- Remove and replace the concrete deck.
- Add shear connectors to provide composite action between the girders and the concrete deck, waterproof membrane and HBP.
- Replace the bridge rails.
- Consider making both abutments integral.
- Provide new approach slabs with an expansion joint at the north.
- Consider topcoat paint on remainder of exterior girders and diaphragms.

Substructure

- Remove all loose and delaminated concrete from the cap and columns.
- Replace reinforcing with significant section loss.
- Treat the pier caps and columns with corrosion inhibitor.
  Wrap the pier columns and caps with FRP.

7.3.2. Load Capacity Analysis of Rehabilitation Alternatives

Load capacity analyses using LRFR method were evaluated for each of the rehabilitation alternatives with the following consideration:

Level A – Minimum Rehabilitation
The inventory rating shall be at least 0.77 HL93 on a strength basis. The permit vehicle shall be evaluated to carry a single lane mixed with traffic with 20% impact.

Level B – Intermediate Rehabilitation
The inventory rating shall be at least 0.85 HL93 on strength basis. The permit vehicle shall be evaluated to carry a single lane mixed with traffic with 20% impact. Exterior girder may be evaluated as single trip mixed with traffic basis for those bridges with shoulders.

Level C – Extensive Rehabilitation
The inventory rating shall be at least 0.95 HL93 on strength basis. The permit vehicle shall be evaluated to carry a single lane mixed with traffic with 20% impact. Exterior girder may be evaluated as single trip mixed with traffic basis for those bridges with shoulders.

Below table is a summary of the rating values for each alternative:

I-25 NB over Indiana Avenue (K-18-M)

	Level A Rehabilitation		
Inventory	Ext. Girder Rating	Controlling Limit State	Location Span - (%)
			0
	Int. Girder Rating	Controlling Limit State	Location Span - (%)
			0
Operating	Ext. Girder Rating	Controlling Limit State	Location Span - (%)
			0
	Int. Girder Rating	Controlling Limit State	Location Span - (%)
			0
Permit	Ext. Girder Rating	Controlling Limit State	Location Span - (%)
			0
	Int. Girder Rating	Controlling Limit State	Location Span - (%)
			0
	Level B Rehabilitation		
Inventory	Ext. Girder Rating	Controlling Limit State	Location Span - (%)
			0
	Int. Girder Rating	Controlling Limit State	Location Span - (%)
			0
Operating	Ext. Girder Rating	Controlling Limit State	Location Span - (%)
			0
	Int. Girder Rating	Controlling Limit State	Location Span - (%)
			0
Permit	Ext. Girder Rating	Controlling Limit State	Location Span - (%)
			0

	Int. Girder Rating	Controlling Limit State	Location Span - (%)
			0
	Level C Rehabilitation		
Inventory	Ext. Girder Rating	Controlling Limit State	Location Span - (%)
			0
	Int. Girder Rating	Controlling Limit State	Location Span - (%)
			0
Operating	Ext. Girder Rating	Controlling Limit State	Location Span - (%)
			0
	Int. Girder Rating	Controlling Limit State	Location Span - (%)
			0
Permit	Ext. Girder Rating	Controlling Limit State	Location Span - (%)
			0
	Int. Girder Rating	Controlling Limit State	Location Span - (%)
			0

I-25 SB over Indiana Avenue (K-18-W)

	Level A Rehabilitation		
Inventory	Ext. Girder Rating	Controlling Limit State	Location Span - (%)
			0
	Int. Girder Rating	Controlling Limit State	Location Span - (%)
			0
Operating	Ext. Girder Rating	Controlling Limit State	Location Span - (%)
			0
	Int. Girder Rating	Controlling Limit State	Location Span - (%)
			0
Permit	Ext. Girder Rating	Controlling Limit State	Location Span - (%)
			0
	Int. Girder Rating	Controlling Limit State	Location Span - (%)
			0
	Level B Rehabilitation		
Inventory	Ext. Girder Rating	Controlling Limit State	Location Span - (%)
			0
	Int. Girder Rating	Controlling Limit State	Location Span - (%)
			0
Operating	Ext. Girder Rating	Controlling Limit State	Location Span - (%)
			0
	Int. Girder Rating	Controlling Limit State	Location Span - (%)
			0
Permit	Ext. Girder Rating	Controlling Limit State	Location Span - (%)
			0

	Int. Girder Rating	Controlling Limit State	Location Span - (%)
			0
	Level C Rehabilitation		
Inventory	Ext. Girder Rating	Controlling Limit State	Location Span - (%)
			0
	Int. Girder Rating	Controlling Limit State	Location Span - (%)
			0
Operating	Ext. Girder Rating	Controlling Limit State	Location Span - (%)
			0
	Int. Girder Rating	Controlling Limit State	Location Span - (%)
			0
Permit	Ext. Girder Rating	Controlling Limit State	Location Span - (%)
			0
	Int. Girder Rating	Controlling Limit State	Location Span - (%)
			0

The inventory ratings above passed the LRFR rating criteria specified for this project because Service II is the controlling limit state. The rating values for the Strength I limit states are higher for these type of wide flange rolled compact steel sections.

7.3.3. Quantities/Cost Estimates

The probable construction costs associated with each rehabilitation alternative and replacement were evaluated. The cost/SF/yr is based on the life expectancy of the level of rehabilitation. The life expectancy for Rehabilitation Levels A, B, C, and replacement options are 20, 30, 50, and 75 years, respectively. Below is a summary of the estimated costs for each alternative.

I-25 NB over Indiana Avenue (L-18-M)

Level A Rehabilitation			***Level B Rehabilitation***		
Cost	Cost/SF	Cost/SF/yr	Cost	Cost/SF	Cost/SF/yr
$560,511	**$158.25**	**$7.91**	**$703,488**	**$198.61**	**$6.62**

Level C Rehabilitation			***Replacement***		
Cost	Cost/SF	Cost/SF/yr	Cost	Cost/SF	Cost/SF/yr
$1,001,773	**$134.22**	**$2.68**	**$1,244,635**	**$153.98**	**$2.05**

I-25 SB over Indiana Avenue (L-18-W)

Level A Rehabilitation			***Level B Rehabilitation***		
Cost	Cost/SF	Cost/SF/yr	Cost	Cost/SF	Cost/SF/yr
$229,684	**$62.61**	**$3.13**	**$375,651**	**$102.40**	**$3.41**

Level C Rehabilitation			***Replacement***		
Cost	Cost/SF	Cost/SF/yr	Cost	Cost/SF	Cost/SF/yr
$523,142	**$142.60**	**$2.85**	**$731,296**	**$161.76**	**$2.16**

A summary of the quantities used to determine the probable construction cost for each alternative are located in the Appendix C.

7.3.4. Rehabilitation Alternative Evaluation

Potential Risk and Other Factors

Rehabilitation criteria categories may not be clear cut, but longer life increases the benefit of greater functionality. A longer life provides a greater opportunity to recover the costs of a more extensive rehabilitation with reduced maintenance and deferred replacement expenses. Skipping one of the criteria may introduce a greater risk of a structure becoming dysfunctional over time.

Justifiable costs are based on rough equity to new bridge costs in 2012 prorated over the target life. Sometimes rehabilitation is justified on the simple basis that a replacement is impractical or something needs to be done fairly immediately at the time the evaluation for improvement is made. Rehabilitation may also be justified if some form of needed corridor change in the foreseeable future will make a new structure, or extensively rehabilitated structure obsolete before its time.

A bridge can be “poor” as indicated by the sufficiency rating of FO or SD for 10 or more years yet continue to function effectively depending on many factors. A deck with a condition rating of 4 may not present any operational problems, but indicates it is deteriorating towards condition rating 3 which will

almost certainly have significant operational and maintenance problems. For example, bridge decks are usually given a condition rating of 4 and classified as structurally deficient when there is significant evidence of delamination and reinforcing corrosion. Delamination alone has several risks:

- **Potholes in the surfacing**

  Potholes in the surface can be mitigated by a relatively thick bonded concrete topping (not patching) and/or an HBP overlay which can slow the development of pop-outs in the surfacing if not placed over broken-up or loose material. Heavy traffic tends to break up additional delamination quickly, while thicker topping and lighter traffic tends to have slower deterioration. Quality of the topping bond tends to retard deterioration. One mechanism for added potholes to form is the same as on roadway pavement: freezing water tapped within the pavement. Good drainage, dense waterproof topping materials and an absence of loose or porous material under the topping will reduce freezing-induced pop-outs. Every effort should be made to not trap porous material under the topping.

- **Falling concrete**

  Falling concrete can be mitigated by some sort of catcher. Note the risk associated with falling concrete may be more perceptual than significant as the result is seldom worse that it is with other debris in the road. Falling concrete may not be as significant risk as rock fall, which is tolerated as a risk.

- **Holes entirely through the deck**

  Holes entirely through the deck have a similar risk profile and mitigations to prevent potholes as potholes in the surfacing and falling concrete combined. If the reinforcing is still intact, the issue is that repair is an emergency situation. If the reinforcing is not intact the consequences to a vehicle can be more significant.

There are other risks that should be considered for rehabilitations with a significant expected life. Some of these risks may not be a priority due to lack of a prior problems with the particular structure and with similar structures. This may be sufficient to indicate the risk is somewhat low over the time periods the structure has been in service. These risks include the following:

- **Collision**

  Collision by trucks and trains is a significant cause of structure collapse. Risk tends to decrease with increasing clear zone and with increasing member strength. Many structures have sufficient redundancy to resist collapse with a member failure.

- **Earthquake**

  Earthquakes are not generally a problem in Colorado, but all structures should have the superstructure effectively connected to the substructure, or sufficiently lap over the seat. Rockers under simple span ends are a high risk element (also for scour and collision), unless motions are effectively limited.

- **Overloading**

  Generally, HL93 strength operating capacity evaluated with realistic ADTT and other adjustment factors will provide a low risk of loading beyond design limits. In Colorado the permit vehicle also provides a check against an errant legal permitted vehicle causing damage.

- **Brittle Fracture**

  Many structures have a risk of brittle fracture, especially those with older steel. Built-up riveted structures normally have cracks stop at rivet holes, limiting strength loss. Wide-flange rolled structures are susceptible to brittle fracture, if they are from the pre-Charpy testing era and should be checked for sufficient redundancy (four or more parallel members if simple span). Concrete pier caps may be a problem, but if integral with two or more columns supporting a superstructure with redundancy, there is probably not a brittle collapse issue. If seemingly subject to brittle fracture, structures can be checked with plastic analysis (probably assuming one lane of HL93 or a permit vehicle and a load factor of 1.1 for DL and LL) with a member failed to a pinned condition at the assumed brittle fracture location.

7.3.5. Recommendations

Given the information presented in this chapter, it is recommended that this bridge follow Level B rehabilitation option which consists of intermediate rehabilitation to the superstructure and substructure components. The cost estimates and load capacity meet the Level B rehabilitation criteria established in this report.

7.4. Conceptual Plans