FINAL SITE IMPROVEMENT PLANS
FOR
SAFEWAY DISTRIBUTION CENTER
NORTH EMPLOYEE AND VISITOR PARKING AREA

4600 EAST STAPLETON DRIVE SOUTH
IN THE CITY OF DENVER, STATE OF COLORADO

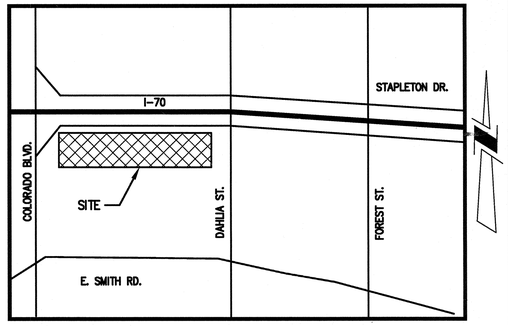

VICINITY MAP
1"=1000'

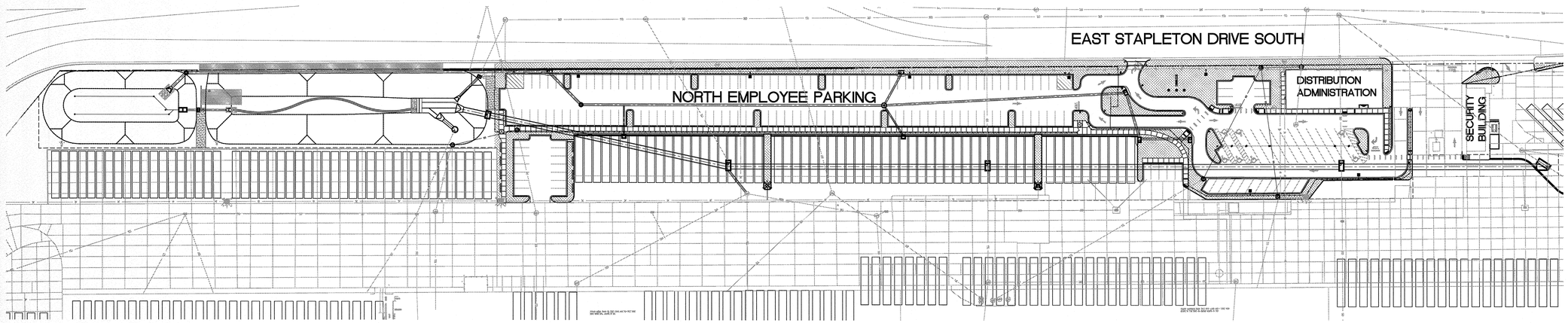

0 60 90 120
(IN FEET)
1 INCH = 60 FEET

OWNER
SAFEWAY, INC.
4600 EAST STAPLETON DRIVE SOUTH
DENVER, CO 80216
ATTN: RICK RUTTELL
(303) 320-8966

GENERAL CONTRACTOR
RHINOTRAX CONSTRUCTION
4161 MULLIGAN DRIVE
LONGMONT, CO 80504
ATTN: MICHELE NOEL
(303) 682-9906

CIVIL ENGINEER
TAIT & ASSOCIATES, INC.
6163 EAST COUNTY ROAD 16
LOVELAND, CO 80537
ATTN: ALEX HOIME, PE
(970) 613-1447

GEOTECHNICAL ENGINEER
CTL|THOMPSON, INC.
1971 WEST 12TH AVENUE
DENVER, CO 80204
ATTN: TONYA HART, PE
(303) 825-0777

LEGEND

- 5245 — EXISTING MAJOR CONTOUR
- 5244 — EXISTING MINOR CONTOUR
- EXISTING CHAIN LINK FENCE
- SS — EXISTING SANITARY SEWER
- W — EXISTING WATERLINE
- SD — EXISTING STORM SEWER
- OE — EXISTING OVERHEAD ELECTRIC
- EXISTING STORM MANHOLE
- EXISTING UTILITY POLE
- EXISTING BOLLARD
- EXISTING LIGHT POLE
- EXISTING FIRE HYDRANT
- 5245 — PROPOSED MAJOR CONTOUR
- 5244 — PROPOSED MINOR CONTOUR
- PROPOSED CHAIN LINK FENCE
- SS — PROPOSED SANITARY SEWER
- PROPOSED STORM DRAIN
- PROPOSED MANHOLE
- PROPOSED TURNSTILE
- PROPOSED CONCRETE BARRIER
- PROPOSED BOLLARD
- PROPOSED FIRE HYDRANT
- PROPOSED LIGHT POLE
- PROPOSED TRAILER LOCATION

SHEET INDEX

C1.0	COVER SHEET
C1.1	GENERAL NOTES
C2.0–C2.2	TOPOGRAPHIC SURVEY
C3.0–C3.2	DEMOLITION PLAN
C4.0–C4.2	HORIZONTAL CONTROL PLAN
C5.0–C5.2	PRECISE GRADING PLAN
C5.3	TYPICAL CROSS-SECTIONS
C6.0	SANITARY SEWER PLAN AND PROFILE
C7.0–C7.4	STORM DRAIN PLAN AND PROFILE
D1.0–D1.1	DRAINAGE PLAN

UNAUTHORIZED CHANGES AND USES:

THE ENGINEER PREPARING THESE PLANS WILL NOT BE RESPONSIBLE FOR, OR LIABLE FOR, UNAUTHORIZED CHANGES TO OR USES OF THESE PLANS. ALL CHANGES TO THE PLANS MUST BE IN WRITING AND MUST BE APPROVED BY THE PREPARER OF THESE PLANS.

CONSTRUCTION CONTRACTOR AGREES THAT IN ACCORDANCE WITH GENERALLY ACCEPTED CONSTRUCTION PRACTICES, CONST. CONTRACTOR WILL BE REQUIRED TO ASSUME SOLE AND COMPLETE RESPONSIBILITY FOR JOB SITE CONDITIONS DURING THE COURSE OF CONSTRUCTION OF THE PROJECT, INCLUDING SAFETY OF ALL PERSONS AND PROPERTY, THAT THIS REQUIREMENT SHALL BE MADE TO APPLY CONTINUOUSLY AND NOT BE LIMITED TO NORMAL WORKING HOURS, AND CONSTRUCTION CONTRACTOR FURTHER AGREES TO DEFEND, INDEMNIFY AND HOLD DESIGN PROFESSIONAL HARMLESS FROM ANY AND ALL LIABILITY, REAL OR ALLEGED, IN CONNECTION WITH THE PERFORMANCE OF WORK ON THIS PROJECT, EXCEPTING LIABILITY ARISING FROM THE SOLE NEGLIGENCE OF DESIGN PROFESSIONAL.

CALL UTILITY NOTIFICATION CENTER OF COLORADO

1-800-922-1987

CALL 2 BUSINESS DAYS IN ADVANCE BEFORE YOU DIG, GRADE, OR EXCAVATE FOR THE MARKING OF UNDERGROUND MEMBER UTILITIES

ENGINEERS NOTE TO CONTRACTOR:

THE EXISTENCE AND LOCATION OF ANY UNDERGROUND UTILITIES, PIPES, AND/OR STRUCTURES SHOWN ON THESE PLANS WERE OBTAINED BY A SEARCH OF AVAILABLE RECORDS. TO THE BEST OF OUR KNOWLEDGE, THERE ARE NO EXISTING UTILITIES EXCEPT AS SHOWN ON THESE PLANS. THE CONTRACTOR SHALL ASCERTAIN THE TRUE VERTICAL AND HORIZONTAL LOCATION OF THOSE UNDERGROUND UTILITIES TO BE USED AND SHALL BE RESPONSIBLE FOR ANY DAMAGE TO ANY PUBLIC OR PRIVATE UTILITIES, SHOWN OR NOT SHOWN HEREON.

BASIS OF BEARINGS:

BEARINGS BASED ON THE NORTH LINE OF LOT 3 AS NORTH 88°03'20" EAST BETWEEN MONUMENTS SHOWN ON THE TOPOGRAPHIC SURVEY.

BENCH MARK

MARTIN/MARTIN ENGINEERING PROJECT BENCHMARK, USGS DISK STAMPED Y259 (LAT 33°46'33", LONG 104°55'49") ELEVATION 5257.26 (NGVD 29 5257.37 RECORD)

City and County of Denver
Development Services
Site Engineering

Checked for General Compliance with applicable Denver Criteria, Rules, Regulations and Standards.

APPROVED (if validly signed)

This approval becomes void if construction is not started within one (1) year of the approval date.

(Approved by) — Date 10/25/11
(Name: Signature in Print) WALT HOME — Review Engineer

APPROVED AS TO FORM.
ENGINEERING CALCULATIONS, DRAWINGS AND DESIGN ADEQUACY ARE ACCEPTED BASED UPON THE PROJECT ENGINEER'S ATTACHED SEAL OF REGISTRATION

THIS APPROVAL IS FOR PRIVATE STORM AND SANITARY SEWER

CALL THE UTILITY NOTIFICATION CENTER OF COLORADO AT

811

THREE (3) BUSINESS DAYS IN ADVANCE BEFORE DIGGING, GRADING OR EXCAVATION FOR MARKING OF MEMBER'S UNDERGROUND UTILITIES

(Project Engineer's Professional Engineer's Seal, Signature and Date)

COLORADO LICENSED PROFESSIONAL ENGINEER 41703 — 9-28-11

DS Project NO. PR2011-065 (2011-0177)

PROJECT NAME: SAFEWAY DISTRIBUTION CENTER

DESIGNED BY DAP	DATE 10-24-10	DATE ISSUED: 09-28-11	DRAWING NO. C1.0
DRAWN BY DAP	DATE 10-24-10		
CHECKED BY AEH	DATE 09-26-11	SHEET_1_OF_69SHEETS	

NO.	DESCRIPTION	BY	DATE
	REVISIONS		

TAIT & ASSOCIATES, INC.
6163 EAST COUNTY ROAD 16
LOVELAND, CO 80537
(970) 613-1447 TEL
(970) 613-1897 FAX
www.tait.com

TAIT

COVER SHEET
NORTH EMPLOYEE AND VISITOR PARKING AREA
SWC I-70 AND DAHLIA STREET ,DENVER, CO
SAFEWAY INC.

DRAWN: DAP
DATE: 10-24-10
CHECKED: AEH
DATE: 09-26-11
REVISION #: 2
DATE: 08-30-11
JOB NO: CO1176F

C1.0

CITY OF DENVER APPROVAL SET - 09/28/11

PW STORM AND SANITARY NOTES:

1. Public Works, Wastewater Management Division's Standard Details and Technical Specifications For Sanitary & Storm Sewers apply to this work. Public Works, Wastewater Management Division's Standard Details (drawings), most recent edition, shall be used as a minimum. The technical specifications are available from DS – Site Engineering. Both sets must be in possession of the contractor at the pre-construction conference and must remain on the job site at all times during construction.
The standard details can be viewed at:
http://www.denvergov.org/Portals/496/documents/Standard%20Details%20no%20Steps%202009.pdf

2. Contractor shall conform to all federal, state and local health and safety rules and regulations.

3. One set of the approved sewer construction drawings must be on-site at all times of construction.

4. All sewer pipes shall be installed with Class B Bedding as a minimum.

5. Any modifications, adjustments, construction or reconstruction of Public Works, Wastewater Division facilities must be inspected by a PW Construction Engineering Inspector. Please schedule an appointment at 303-446-3722 a minimum of 48 hours in advance of the work to schedule an inspector.

6. Pipe material, fittings, trenching, bedding, connections, and sewer installation must be inspected by a PW Construction Engineering Inspector prior to any trench backfill. Please schedule an appointment at 303-446-3722 a minimum of 48 hours in advance of the work to schedule an inspector. Monitoring of the project by PW shall be for the purpose of assuring general compliance with the approved plans, standards, details, and specifications as well as the Rules & Regulations. Storm and Sanitary inspections shall not take the place of construction inspection and materials testing, which is the owner's responsibility.

7. Sanitary sewer pipes shall be PVC and conform to: ASTM D3034 SDR 35 for sizes 8 inches to 15 inches in diameter (solid wall), ASTM F789 for 18 inches (solid wall), ASTM F679 for sizes 18 to 36 inches (solid wall), ASTM F949 for sizes 8 to 36 inches (PVC profile wall), ASTM F794 for sizes 8 to 48 inches (profile wall), or ASTM F1803 for sizes 18 to 60 inches (closed profile gravity pipe).

8. Any questions regarding storm or sanitary facilities that arise during construction should be brought to the attention of PW Construction Engineering at (303) 446-3722.

9. Backfill in public right of way must meet the requirements of Denver Public Works Department. A Street Cut Permit and inspection of a backfill and pavement repair by Public Works is required for all work in the public right of way. The contractor and/or developer is advised to contact Construction Engineering ROW Inspection at 303-446-3469 or PWPO at 303-446-3759 to obtain information regarding fees and procedures for obtaining the required permit(s). Contractor must obtain a street cut permit and notify the district inspector at (303) 446-3469, 48-hours prior to start of job. Compaction testing is required.

10. The contractor performing work on any public or private storm sewer facility or appurtenance must be properly trade licensed as a company and have a licensed plumber or certified journeyman drainlayer on site during the work.

11. Access must be maintained for all sewer manholes during construction. Any design changes to new or existing public storm or sanitary sewer must include permanent access to the public storm and sanitary sewer manholes and could require roll-over curb, commercial drive, reinforced concrete sidewalk, ritter rings or concrete pad. Minimum access to each manhole is a 20'wide lane from the nearest public right of way, centered at the manhole including a 10'radius around the manhole and 22.0'vertical clearance.

12. The connection of a new sanitary/storm sewer to an existing manhole may require manhole reconstruction at the discretion of the PW Construction Engineering Inspector or the PW Construction Engineering engineer.

13. Changes in the elevation of an existing brick manhole may require the use of a pre-cast concrete manhole or manhole reconstruction at the discretion of the PW Construction Engineering Inspector and/or PW Construction Engineering engineer.

14. Changes in elevation or modification to existing inlets may require reconstruction at the discretion of the PW Construction Engineering Inspector or Engineer.

15. The contractor shall be aware that when debris is dropped into public manholes and other public structures, the contractor is to immediately remove this to eliminate the possibility of property damage due to the debris causing backup into private properties. If it is determined that debris caused a backup, the contractor shall be held responsible for damages.

16. The contractor shall make sure that all manholes and other structures are built to finished grade.

17. No trees shall be planted within any sewer easement or within ten (10) feet of any public manholes, pipes or inlets.

18. "As-Built"electronic submittal or prints are to be submitted to Development Services at completion of the project. "As-Built"drawings are to be reproducible copies (or originals) of the Approved Construction Drawings. Any field changes are to be noted. The drawings will state "As-Built"in large block letters. The "As-Built" electronic submittal or prints are to be signed, dated and stamped by a Colorado Registered Engineer. All "As-Built" elevations must be on the NAVD 88.

19. As-Built field notes, from which the As-Built drawings are prepared, are to be provided and stamped/signed and dated by the Colorado Registered Professional Land Surveyor. These notes will include the stationing of any building sewer stubs installed.

20. Upon completion of site grading and sewer construction, the owner or developer shall be responsible for furnishing Development Services with a Certificate of Inspection prepared by the Colorado Registered Engineer who performed or supervised construction inspection, certifying that:

a) A construction inspector was on the job site at all times sewer or drainage facility work was performed,
b) All storm and sanitary sewer facilities, site grading, detention pond grading and outlet works (if any) were constructed in compliance with plans and specifications approved by The Department of Public Works
c) The As-Built drawings included accurately depict the final installation of the storm drainage and/or sewer system. This certification shall be required for all storm and sanitary sewer facilities in addition to any inspections made by the division or the Department of Public Works.

21. Denver Water Department Note. All persons and entities involved in this project shall have the responsibility to take whatever steps necessary to protect all water facilities. If any water facility cannot be adequately protected, then said water facilities shall be relocated or removed in accordance with Denver Water Department requirements.

GENERAL SITE NOTES:

1. THE CONSTRUCTION COVERED BY THESE PLANS IS ON PRIVATE PROPERTY AND SHALL CONFORM TO SPECIFICATIONS SHOWN ON THESE PLANS.

2. THE GEOTECHNICAL INVESTIGATION AS PROVIDED BY CTL|THOMPSON IS INCLUDED AS PART OF THIS PLAN SET. REPORT # DN45,329-135 DATED JANUARY 6, 2011.

3. THE CONTRACTOR SHALL NOT CHANGE OR DEVIATE FROM THE PLANS WITHOUT FIRST OBTAINING WRITTEN APPROVAL FROM THE OWNER AND ENGINEER.

4. THE EXISTING UTILITY LOCATIONS SHOWN ON THE PLANS ARE APPROXIMATE AND MAY NOT INCLUDE ALL LINES PRESENT. THE CONTRACTOR SHALL BE RESPONSIBLE FOR CALLING THE UTILITY NOTIFICATION CENTER OF COLORADO AT (811) OR AT 1-800-922-1987. AND COORDINATE FIELD LOCATION OF EXISTING UNDERGROUND UTILITIES PRIOR TO BEGINNING GRADING AND UTILITY WORK ! STOP! CALL BEFORE YOU DIG!

5. THE CONTRACTOR SHALL BE RESPONSIBLE FOR OBTAINING ALL PERMITS NOT OBTAINED BY THE OWNER OR OWNER'S REPRESENTATIVES, AND PAY ALL FEES AS REQUIRED FOR THE CONSTRUCTION COVERED IN THESE PLANS.

6. ALL WORK AND MATERIALS SHALL BE SUBJECT TO INSPECTION AND APPROVAL BY THE OWNER OR THE OWNER'S REPRESENTATIVE.

7. ALL WORK SHALL CONFORM TO ALL APPLICABLE LOCAL. STATE. AND FEDERAL LAWS AND REGULATIONS.

8. CONTRACTOR SHALL CONTACT THE ENGINEER IMMEDIATELY UPON DISCOVERY OF ANY ERRORS OR INCONSISTENCIES.

9. ALL ESTIMATES OF QUANTITIES ARE FOR INFORMATIONAL PURPOSES ONLY. CONTRACTOR AND SUBCONTRACTORS SHALL BE RESPONSIBLE FOR DETERMINING ALL QUANTITIES. CONTRACTOR SHALL PROVIDE ALL WORK AND MATERIALS AS SHOWN ON PLANS.

10. THE CONTRACTOR SHALL BE RESPONSIBLE FOR JOB SITE SAFETY OF HIS OWN PERSONNEL, ALL VISITORS TO THE SITE, AND THE GENERAL PUBLIC.

11. THE CONTRACTOR SHALL BE RESPONSIBLE FOR REPAIRING ALL EXISTING AREAS, FENCES, WALLS, SHEDS, STRUCTURES OR OTHER IMPROVEMENTS DAMAGED DURING CONSTRUCTION ACTIVITIES TO EQUAL OR BETTER CONDITION.

12. THE CONTRACTOR SHALL REMOVE ALL DEBRIS RESULTING FROM WORK UNDER THIS CONTRACT TO AN APPROVED DUMP SITE.

13. ALL DIMENSIONS SHOWN ON THE SITE PLAN ARE TO FLOWLINE IN CURBED AREA AND EXTERIOR OF BUILDING WALLS IN BUILDING AREAS.

14. LIMIT OF CONSTRUCTION WILL STAY WITHIN PROPERTY LINE UNLESS OTHERWISE NOTED

15. THE CONTRACTOR SHALL BE RESPONSIBLE FOR PROVIDING THE OWNER OR THE OWNER'S REPRESENTATIVE WITH REDLINED PLANS OR AS-BUILT SURVEYS. CERTIFIED BY A PROFESSIONAL ENGINEER IN THE STATE OF COLORADO.

16. THE CONTRACTOR SHALL BE RESPONSIBLE FOR ENCROACHMENT PERMITS FOR WORK WITHIN RIGHT-OF-WAY.

17. BID ALTERNATES INCLUDED ON SHEETS C8.0, C8.1, AND C8.2.

ADA NOTES:

1. THE CONTRACTOR IS RESPONSIBLE FOR ENSURING THAT ALL ACCESSIBLE AREAS ARE BUILT IN ACCORDANCE WITH THE PLANS AND THE AMERICANS WITH DISABILITIES ACT ACCESSIBILITY GUIDELINES (ADAAG).

2. ALL ADA ACCESSIBLE PARKING STALLS SHALL MEET ADA REQUIREMENTS PER THE ADAAG SECTION 4.6. ALL ADA ACCESSIBLE PARKING SHALL BE CONSTRUCTED WITH A MAXIMUM SLOPE OF 2.00% IN ANY DIRECTION.

3. ALL ADA ACCESSIBLE ROUTES SHALL MEET ADA REQUIREMENTS PER THE ADAAG SECTION 4.3. ALL ADA ACCESSIBLE ROUTES SHALL BE CONSTRUCTED WITH A MAXIMUM CROSS SLOPE OF 2.00% AND A MAXIMUM LONGITUDINAL SLOPE OF 5.00%

4. ALL ADA MANEUVERING AREAS AT DOORS SHALL MEET ADA REQUIREMENTS PER THE ADAAG SECTION 4.13.6. ALL ADA MANEUVERING AREAS SHALL BE CONSTRUCTED WITH A MAXIMUM SLOPE OF 2.00% IN ANY DIRECTION.

5. ALL ADA ACCESSIBLE RAMPS SHALL MEET THE ADA REQUIREMENTS PER ADAAG SECTIONS 4.7 & 4.8.

GENERAL UTILITY NOTES:

1. CONTRACTOR TO FIELD VERIFY LOCATION AND SIZE OF ALL EXISTING UTILITIES BEFORE BEGINNING WORK.

2. THE CONTRACTOR SHALL COORDINATE EXACT LOCATIONS AND SIZES OF ALL UTILITY SERVICE LINE HOOKUPS WITH THE APPROPRIATE PLANS AND SPECIFICATIONS, AND REPORT ANY DISCREPANCIES TO THE ENGINEER OR RESPONSIBLE PARTY PRIOR TO BEGINNING UTILITIES CONSTRUCTION.

3. THE CONTRACTOR SHALL CONSTRUCT ALL STORM DRAINAGE FACILITIES IN ACCORDANCE WITH THE APPLICABLE STANDARDS AND SPECIFICATIONS OF CITY AND COUNTY OF DENVER DEPARTMENT OF PUBLIC WORKS.

4. THE CONTRACTOR SHALL CONSTRUCT ALL ELECTRIC, GAS, AND COMMUNICATION SERVICE IN ACCORDANCE WITH THE APPLICABLE STANDARDS AND SPECIFICATIONS OF THE UTILITY PROVIDER.

5. THE CONTRACTOR IS RESPONSIBLE FOR COORDINATING UTILITY SERVICE CONNECTIONS WITH THE APPROPRIATE UTILITY COMPANY/OWNER, AND TO OBTAIN ALL PERMITS AND PAY ALL FEES AS REQUIRED FOR SERVICE CONNECTIONS.

6. UNLESS OTHERWISE NOTED, INSTALLATION OF A UTILITY SERVICE INCLUDES TRENCHING FOR THAT PARTICULAR SERVICE.

7. TRENCH RESPONSIBILITIES INCLUDES EXCAVATION. BACKFILL COMPACTION AND MAINTENANCE OF THE TRENCH.

CITY AND COUNTY OF DENVER
Development Services
Site Engineering

DS Project NO. PR-2011-065 (2011-0177)

PROJECT NAME: SAFEWAY DISTRIBUTION CENTER

DESIGNED BY	DATE	DATE ISSUED:	DRAWING NO.
DAP	10-24-10	09-28-11	C1.1
DRAWN BY DAP	DATE 10-24-10		
CHECKED BY AEH	DATE 09-26-11	SHEET 2 OF 69 SHEETS	

PREPARED UNDER THE SUPERVISION OF
TAIT & ASSOCIATES, INC.

ALEX HOIME, PE 41703 — DATE 9-28-11

COLORADO LICENSED ALEX HOIME 41703 SEAL PROFESSIONAL ENGINEER

NO.	DESCRIPTION	BY	DATE
	REVISIONS		

TAIT & ASSOCIATES, INC.
5165 EAST COUNTY ROAD 16
LOVELAND, CO 80537
(970) 613-1447 TEL
(970) 613-1897 FAX
www.tait.com

TAIT

GENERAL NOTES
NORTH EMPLOYEE AND VISITOR PARKING AREA
SWC I-70 AND DAHLIA STREET ,DENVER, CO
SAFEWAY INC.

DRAWN: DAP
DATE: 10-24-10
CHECKED: AEH
DATE: 09-26-11
REVISION #:
DATE:
JOB NO: CO1176F

C1.1

CITY OF DENVER APPROVAL SET - 09/28/11

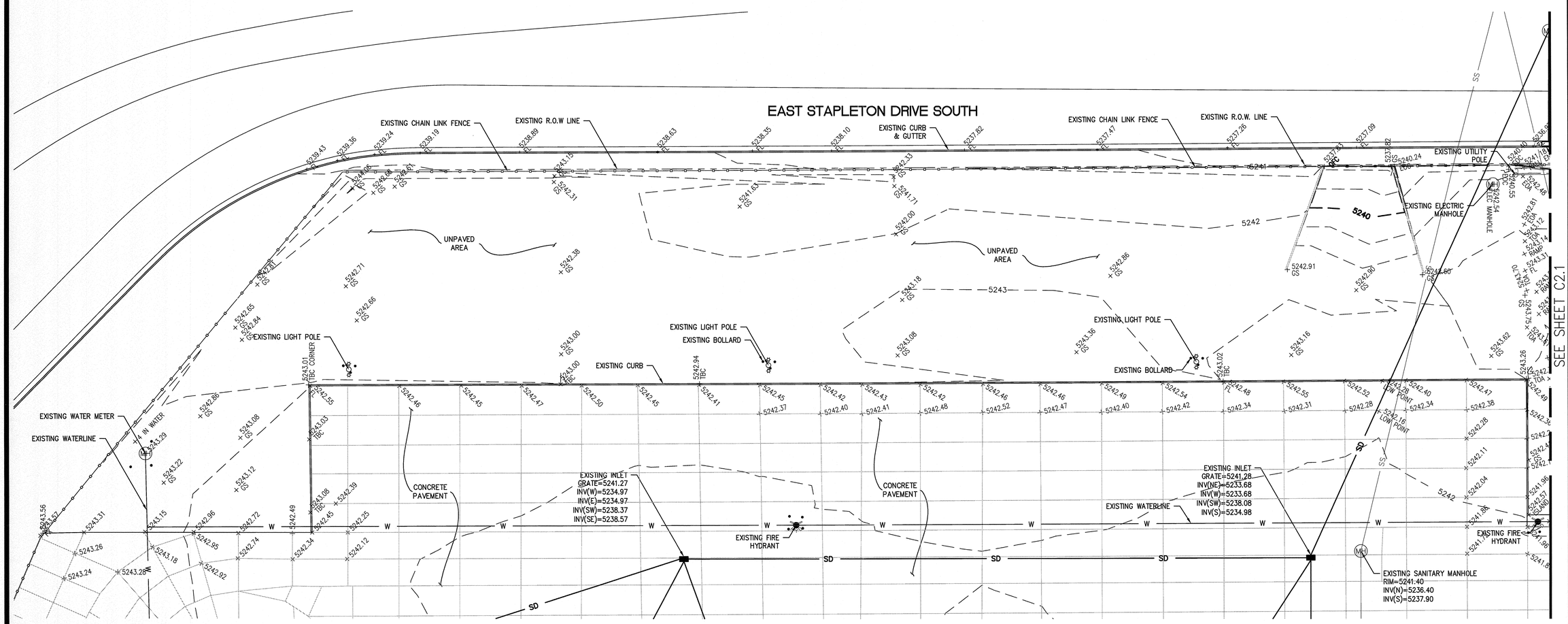

LEGEND

5245	EXISTING MAJOR CONTOUR
5244	EXISTING MINOR CONTOUR
	EXISTING CHAIN LINK FENCE
OE	EXISTING OVERHEAD ELECTRIC
SS	EXISTING SANITARY SEWER
W	EXISTING WATERLINE
SD	EXISTING STORM SEWER
MH	EXISTING MANHOLE
	EXISTING UTILITY POLE
	EXISTING BOLLARD
	EXISTING LIGHT POLE
	EXISTING FIRE HYDRANT
	EXISTING INLET
+	SURFACE ELEVATION OR POINT DESCRIPTION

ABBREVIATIONS

EOA	EDGE OF ASPHALT
EOC	EDGE OF CONCRETE
CB	CATCH BASIN
FL	FLOW LINE
GB	GRADE BREAK
GS	GROUND SHOT
HP	HIGH POINT
TBC	TOP BACK OF CURB
TOA	TOP OF ASPHALT
(R)	DENOTES ELEVATION FROM RECORD INFORMATION

0 20 30 40

(IN FEET)
1 INCH = 20 FEET

CALL UTILITY NOTIFICATION CENTER OF COLORADO

1-800-922-1987

CALL 2 BUSINESS DAYS IN ADVANCE BEFORE YOU DIG, GRADE, OR EXCAVATE FOR THE MARKING OF UNDERGROUND MEMBER UTILITIES

ENGINEERS NOTE TO CONTRACTOR:

THE EXISTENCE AND LOCATION OF ANY UNDERGROUND UTILITIES, PIPES, AND/OR STRUCTURES SHOWN ON THESE PLANS WERE OBTAINED BY A SEARCH OF AVAILABLE RECORDS. TO THE BEST OF OUR KNOWLEDGE, THERE ARE NO EXISTING UTILITIES EXCEPT AS SHOWN ON THESE PLANS. THE CONTRACTOR SHALL ASCERTAIN THE TRUE VERTICAL AND HORIZONTAL LOCATION OF THOSE UNDERGROUND UTILITIES TO BE USED AND SHALL BE RESPONSIBLE FOR ANY DAMAGE TO ANY PUBLIC OR PRIVATE UTILITIES, SHOWN OR NOT SHOWN HEREON.

BASIS OF BEARINGS:

BEARINGS BASED ON THE NORTH LINE OF LOT 3 AS NORTH 88°03'20" EAST BETWEEN MONUMENTS SHOWN ON THE TOPOGRAPHIC SURVEY.

BENCH MARK

MARTIN/MARTIN ENGINEERING PROJECT BENCHMARK, USGS DISK STAMPED Y259 (LAT 33°46'33", LONG 104°55'49") ELEVATION 5257.26 (NGVD 29 5257.37 RECORD)

CITY AND COUNTY OF DENVER
Development Services
Site Engineering

DS Project NO. PR-2011-065 (2011-0177)

PROJECT NAME: SAFEWAY DISTRIBUTION CENTER

DESIGNED BY	DATE	DATE ISSUED:	DRAWING NO.
DAP	10-24-10	09-28-11	C2.0
DRAWN BY DAP	DATE 10-24-10	SHEET 3 OF 49 SHEETS	
CHECKED BY AEH	DATE 09-28-11		

NO.	DESCRIPTION	BY	DATE
	REVISIONS		

TAIT & ASSOCIATES, INC.
6163 EAST COUNTY ROAD 16
LOVELAND, CO 80537
(970) 613-1447 TEL
(970) 613-1897 FAX
www.tait.com

TAIT

TOPOGRAPHIC SURVEY

NORTH EMPLOYEE AND VISITOR PARKING AREA
SWC I-70 AND DAHLIA STREET ,DENVER, CO
SAFEWAY INC.

DRAWN: DAP
DATE: 10-24-10
CHECKED: AEH
DATE: 09-28-11
REVISION #: 1
DATE: 08-16-11
JOB NO: CO1176F

C2.0

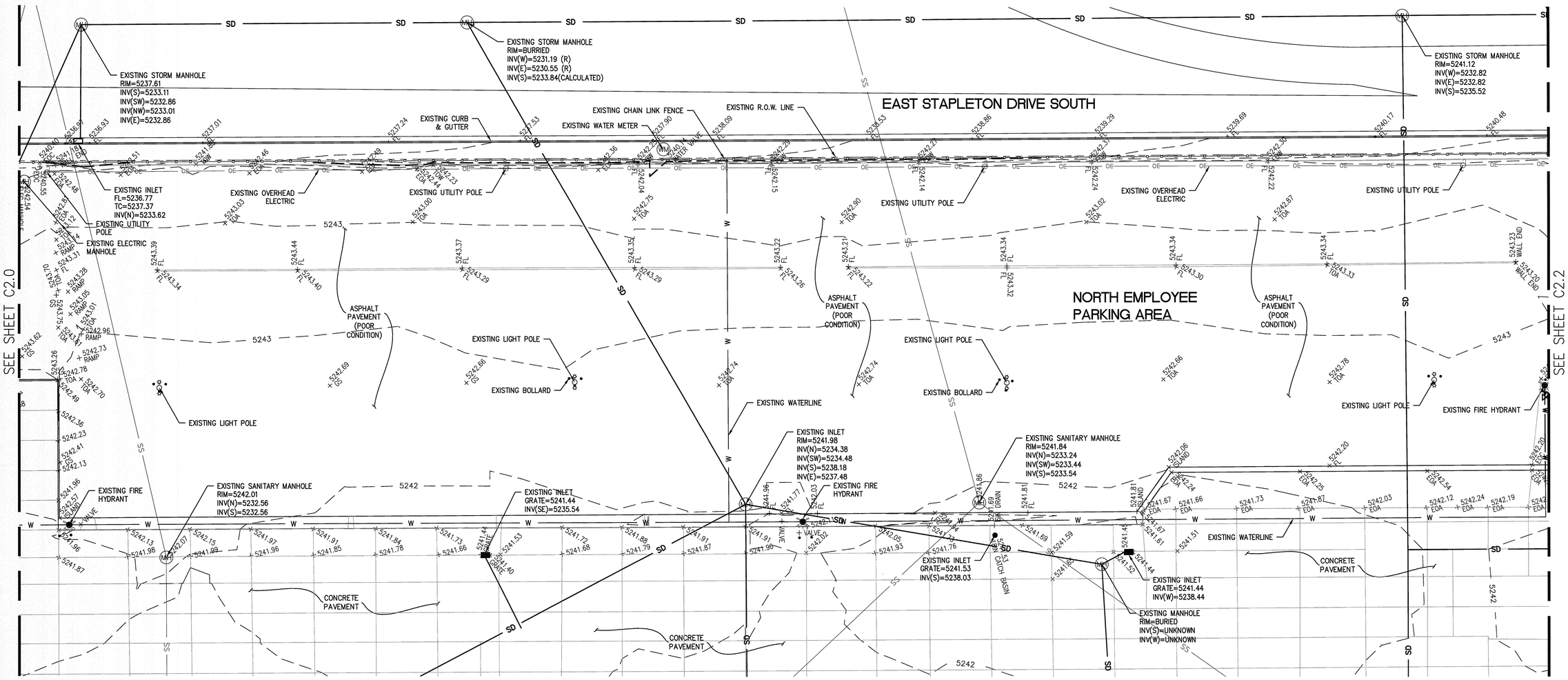

LEGEND

- 5245 — EXISTING MAJOR CONTOUR
- 5244 — EXISTING MINOR CONTOUR
- EXISTING CHAIN LINK FENCE
- OE — EXISTING OVERHEAD ELECTRIC
- SS — EXISTING SANITARY SEWER
- W — EXISTING WATERLINE
- SD — EXISTING STORM SEWER
- MH — EXISTING MANHOLE
- EXISTING UTILITY POLE
- EXISTING BOLLARD
- EXISTING LIGHT POLE
- EXISTING FIRE HYDRANT
- EXISTING INLET
- + SURFACE ELEVATION OR POINT DESCRIPTION

ABBREVIATIONS

EOA	EDGE OF ASPHALT
EOC	EDGE OF CONCRETE
CB	CATCH BASIN
FL	FLOW LINE
GB	GRADE BREAK
GS	GROUND SHOT
HP	HIGH POINT
TBC	TOP BACK OF CURB
TOA	TOP OF ASPHALT
(R)	DENOTES ELEVATION FROM RECORD INFORMATION

0 20 30 40

(IN FEET)
1 INCH = 20 FEET

CALL UTILITY NOTIFICATION CENTER OF COLORADO

1-800-922-1987

CALL 2 BUSINESS DAYS IN ADVANCE BEFORE YOU DIG, GRADE, OR EXCAVATE FOR THE MARKING OF UNDERGROUND MEMBER UTILITIES

ENGINEERS NOTE TO CONTRACTOR:

THE EXISTENCE AND LOCATION OF ANY UNDERGROUND UTILITIES, PIPES, AND/OR STRUCTURES SHOWN ON THESE PLANS WERE OBTAINED BY A SEARCH OF AVAILABLE RECORDS. TO THE BEST OF OUR KNOWLEDGE, THERE ARE NO EXISTING UTILITIES EXCEPT AS SHOWN ON THESE PLANS. THE CONTRACTOR SHALL ASCERTAIN THE TRUE VERTICAL AND HORIZONTAL LOCATION OF THOSE UNDERGROUND UTILITIES TO BE USED AND SHALL BE RESPONSIBLE FOR ANY DAMAGE TO ANY PUBLIC OR PRIVATE UTILITIES, SHOWN OR NOT SHOWN HEREON.

BASIS OF BEARINGS:

BEARINGS BASED ON THE NORTH LINE OF LOT 3 AS NORTH 88°03'20" EAST BETWEEN MONUMENTS SHOWN ON THE TOPOGRAPHIC SURVEY.

BENCH MARK

MARTIN/MARTIN ENGINEERING PROJECT BENCHMARK, USGS DISK STAMPED Y259 (LAT 33°46'33", LONG 104°55'49") ELEVATION 5257.26 (NGVD 29 5257.37 RECORD)

CITY AND COUNTY OF DENVER
Development Services
Site Engineering

DS Project NO. PR-2011-065 (2011-0177)

PROJECT NAME: SAFEWAY DISTRIBUTION CENTER

DESIGNED BY DAP	DATE 10-24-10	DATE ISSUED: 09-28-11	DRAWING NO. C2.1
DRAWN BY DAP	DATE 10-24-10		
CHECKED BY AEH	DATE 09-26-11	SHEET 4 OF 49 SHEETS	

NO.	DESCRIPTION	BY	DATE
	REVISIONS		

TAIT & ASSOCIATES, INC.
6163 EAST COUNTY ROAD 16
LOVELAND, CO 80537
(970) 613-1447 TEL
(970) 613-1897 FAX
www.tait.com

TAIT

TOPOGRAPHIC SURVEY

NORTH EMPLOYEE AND VISITOR PARKING AREA
SWC I-70 AND DAHLIA STREET , DENVER, CO
SAFEWAY INC.

DRAWN: DAP
DATE: 10-24-10
CHECKED: AEH
DATE: 09-26-11
REVISION #: 2
DATE: 08-16-11
JOB NO: CO1176F

C2.1

CITY OF DENVER APPROVAL SET - 09/28/11

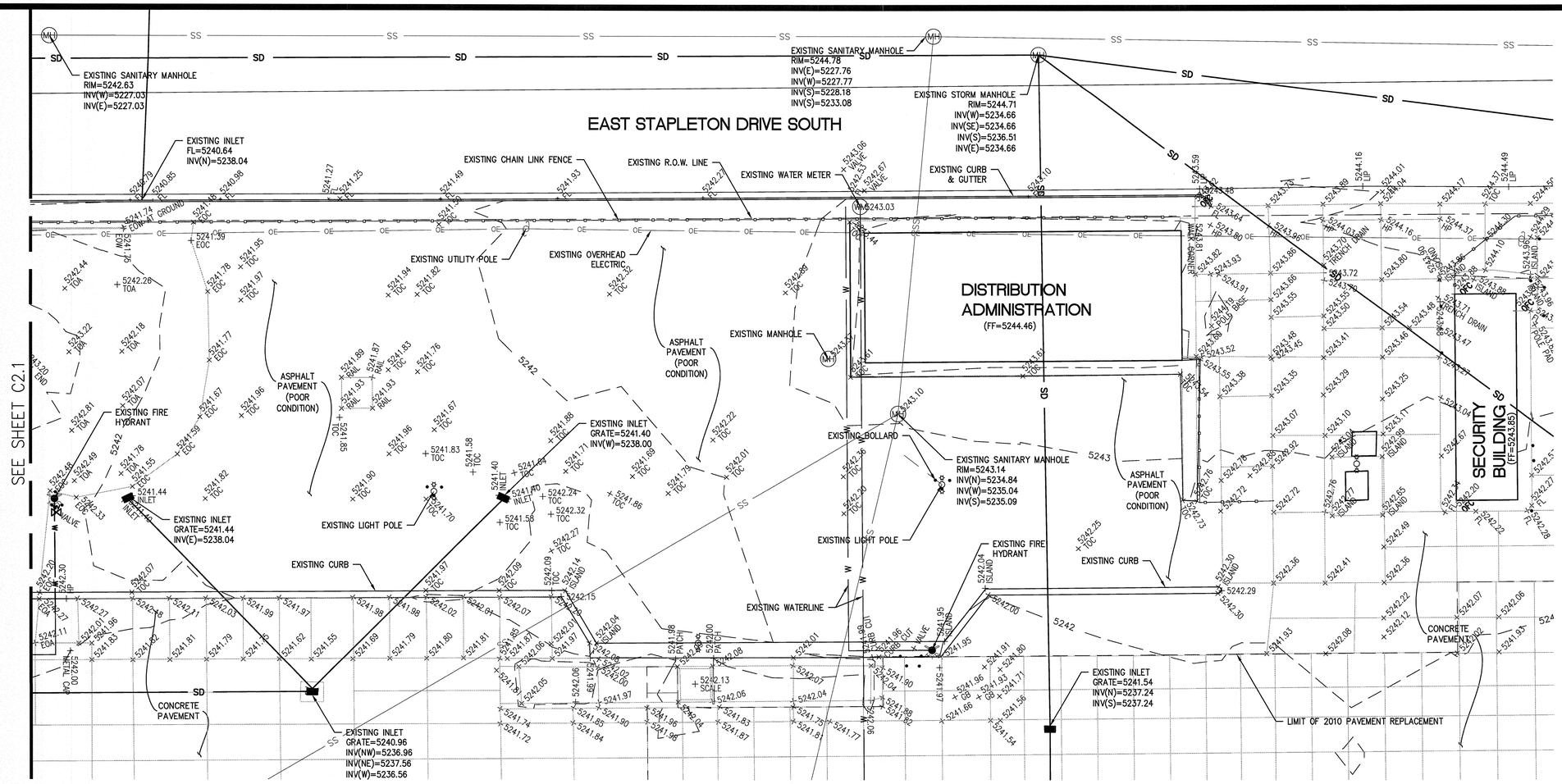

LEGEND

5245	EXISTING MAJOR CONTOUR
5244	EXISTING MINOR CONTOUR
	EXISTING CHAIN LINK FENCE
OE	EXISTING OVERHEAD ELECTRIC
SS	EXISTING SANITARY SEWER
W	EXISTING WATERLINE
SD	EXISTING STORM SEWER
MH	EXISTING MANHOLE
	EXISTING UTILITY POLE
	EXISTING BOLLARD
	EXISTING LIGHT POLE
	EXISTING FIRE HYDRANT
	EXISTING INLET
+	SURFACE ELEVATION OR POINT DESCRIPTION

ABBREVIATIONS

EOA	EDGE OF ASPHALT
EOC	EDGE OF CONCRETE
CB	CATCH BASIN
FL	FLOW LINE
GB	GRADE BREAK
GS	GROUND SHOT
HP	HIGH POINT
TBC	TOP BACK OF CURB
TOA	TOP OF ASPHALT
(R)	DENOTES ELEVATION FROM RECORD INFORMATION

CALL UTILITY NOTIFICATION CENTER OF COLORADO

1-800-922-1987

CALL 2 BUSINESS DAYS IN ADVANCE BEFORE YOU DIG, GRADE, OR EXCAVATE FOR THE MARKING OF UNDERGROUND MEMBER UTILITIES

ENGINEERS NOTE TO CONTRACTOR:

THE EXISTENCE AND LOCATION OF ANY UNDERGROUND UTILITIES, PIPES, AND/OR STRUCTURES SHOWN ON THESE PLANS WERE OBTAINED BY A SEARCH OF AVAILABLE RECORDS. TO THE BEST OF OUR KNOWLEDGE, THERE ARE NO EXISTING UTILITIES EXCEPT AS SHOWN ON THESE PLANS. THE CONTRACTOR SHALL ASCERTAIN THE TRUE VERTICAL AND HORIZONTAL LOCATION OF THOSE UNDERGROUND UTILITIES TO BE USED AND SHALL BE RESPONSIBLE FOR ANY DAMAGE TO ANY PUBLIC OR PRIVATE UTILITIES, SHOWN OR NOT SHOWN HEREON.

BASIS OF BEARINGS:

BEARINGS BASED ON THE NORTH LINE OF LOT 3 AS NORTH 88°03'20" EAST BETWEEN MONUMENTS SHOWN ON THE TOPOGRAPHIC SURVEY.

BENCH MARK

MARTIN/MARTIN ENGINEERING PROJECT BENCHMARK, USGS DISK STAMPED Y259 (LAT 33°46'33", LONG 104°55'49") ELEVATION 5257.26 (NGVD 29 5257.37 RECORD)

NO.	DESCRIPTION	BY	DATE
	REVISIONS		

TAIT & ASSOCIATES, INC.
6163 EAST COUNTY ROAD 16
LOVELAND, CO 80537
(970) 613-1447 TEL
(970) 613-1897 FAX
www.tait.com

TAIT

TOPOGRAPHIC SURVEY

NORTH EMPLOYEE AND VISITOR PARKING AREA
SWC I-70 AND DAHLIA STREET, DENVER, CO
SAFEWAY INC.

CITY AND COUNTY OF DENVER
Development Services
Site Engineering

DS Project NO. PR-2011-065 (2011-0177)

PROJECT NAME: SAFEWAY DISTRIBUTION CENTER

DESIGNED BY DAP	DATE 10-24-10	DATE ISSUED: 09-28-11	DRAWING NO.
DRAWN BY DAP	DATE 10-26-10	SHEET 5 OF 49 SHEETS	C2.2
CHECKED BY AEH	DATE 09-28-11		

DRAWN: DAP
DATE: 10-24-10
CHECKED: AEH
DATE: 09-28-11
REVISION: 1-2
DATE: 09-16-11
JOB NO: CO1176F

C2.2

CITY OF DENVER APPROVAL SET - 09/28/11

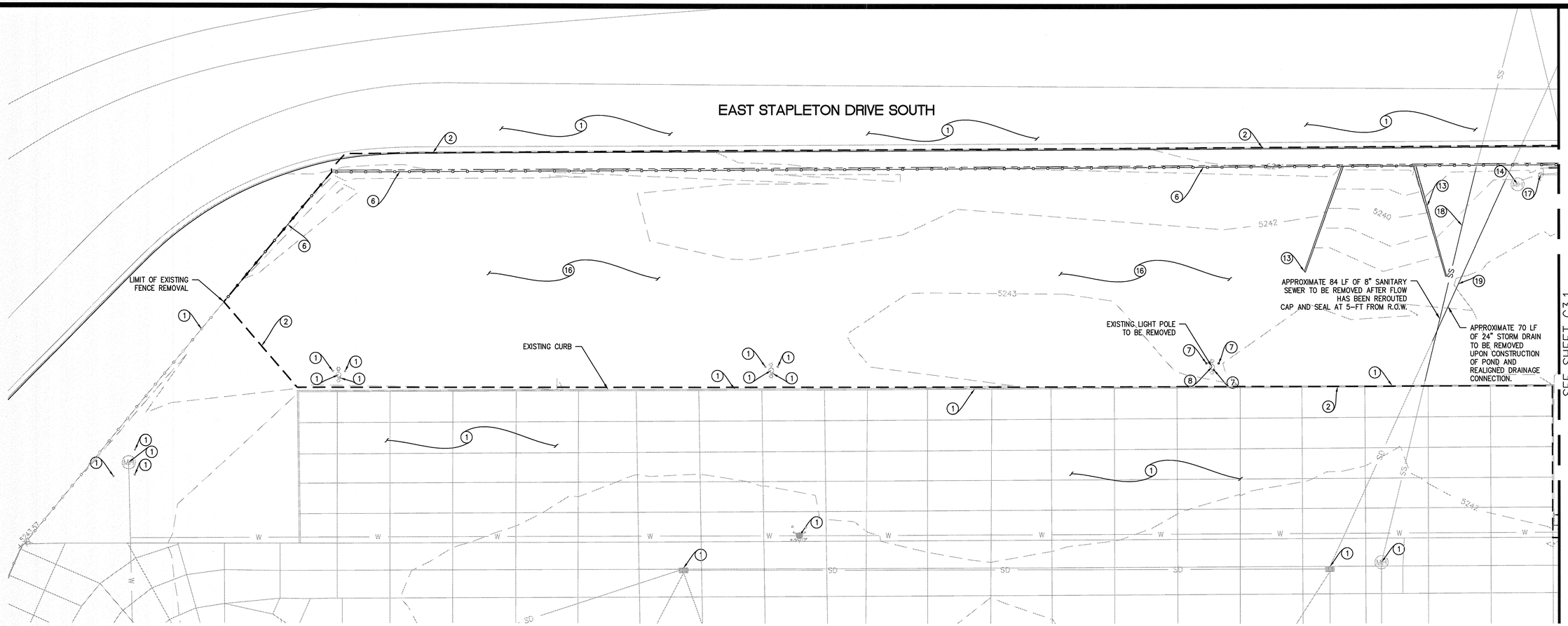

DEMOLITION SPECIFICATIONS

1. EXTENT OF DEMOLITION WORK AS SHOWN ON DRAWINGS. DEMOLITION INCLUDES COMPLETE WRECKING OF EXISTING IMPROVEMENTS AND REMOVAL AND DISPOSAL OF DEMOLISHED MATERIALS.
2. TRAFFIC: CONDUCT DEMOLITION OPERATIONS AND REMOVAL OF DEBRIS TO ENSURE MINIMUM INTERFERENCE WITH ROADS, STREETS, WALKS, AND OTHER ADJACENT OCCUPIED FACILITIES. DO NOT CLOSE OR OBSTRUCT STREETS, WALKS OR OTHER OCCUPIED OR USED FACILITIES WITHOUT PERMISSION FROM THE CITY OF DENVER.
3. PROTECTIONS: ENSURE SAFE PASSAGE OF PERSONS AROUND AREA OF DEMOLITION. CONDUCT OPERATIONS TO PREVENT INJURY TO ADJACENT BUILDINGS, STRUCTURES, OTHER FACILITIES, AND PERSONS.
4. DAMAGES: PROMPTLY REPAIR DAMAGES CAUSED TO ADJACENT FACILITIES BY DEMOLITION OPERATIONS AT NO COST TO OWNER.
5. POLLUTION CONTROLS: USE WATER SPRINKLING, TEMPORARY ENCLOSURES, AND OTHER SUITABLE METHODS TO LIMIT DUST AND DIRT RISING AND SCATTERING IN AIR TO LOWEST PRACTICAL LEVEL. COMPLY WITH GOVERNMENTAL REGULATIONS PERTAINING TO ENVIRONMENTAL PROTECTION.
6. BELOW-GRADE CONSTRUCTION: DEMOLISH AND REMOVE BELOW-GRADE CONSTRUCTION AND ALL FOOTINGS, CONCRETE SLAB AND UNDERGROUND INACTIVE UTILITY LINES, UNLESS OTHERWISE NOTED.
7. FILLING BELOW-GRADE VOIDS, COMPACTING EXISTING SOIL DISTURBED DURING DEMOLITION OF EXISTING IMPROVEMENTS, AND REMEDIAL GRADING: COMPLETELY FILL BELOW-GRADE AREAS AND VOIDS, AND PERFORM NECESSARY RE-COMPACTION AND REMEDIAL GRADING OF SOIL, RESULTING FROM DEMOLITION OF EXISTING STRUCTURES AND IMPROVEMENTS.
   - A. USE SATISFACTORY SOIL MATERIALS CONSISTING OF STONE GRAVEL, AND SAND, FREE FROM DEBRIS, TRASH, FROZEN MATERIALS, ROOTS AND OTHER ORGANIC MATTER, AS RECOMMENDED BY GEOTECHNICAL REPORT.
   - B. PRIOR TO PLACEMENT OF FILL MATERIALS, ENSURE THAT AREAS TO BE FILLED ARE FREE OF STANDING WATER, TRASH AND DEBRIS.
   - C. PLACE FILL MATERIALS IN HORIZONTAL LAYERS AS RECOMMENDED BY GEOTECHNICAL REPORT.
   - D. AFTER FILL PLACEMENT AND COMPACTION, GRADE SURFACE TO MEET ADJACENT CONTOURS. CONTRACTOR IS RESPONSIBLE FOR SOILS COMPACTION TESTS. COMPACTION TEST SHALL MEET ALL REQUIREMENTS OF THE GEOTECHNICAL REPORT.
8. DISPOSAL: REMOVE FROM SITE ALL DEBRIS, RUBBISH, AND OTHER MATERIALS RESULTING FROM DEMOLITION OPERATIONS. BURNING OF REMOVED MATERIALS FROM DEMOLISHED STRUCTURE WILL NOT BE PERMITTED ON SITE.
9. SITE CLEARING: REMOVE TREES, SHRUBS, GRASS, AND OTHER VEGETATION, INCLUDING ALL ROOT SYSTEMS, IMPROVEMENTS, OR OBSTRUCTIONS AS INDICATED.
10. FINISH SITE CONDITION: THE FINISH GROUND SURFACES SHALL BE LEFT IN SMOOTH, UNIFORM GRADED CONDITION.
11. THIS DEMOLITION PLAN IS NOT INTENDED TO, AND DOES NOT DETERMINE THE METHOD, DETAILS, AND MEANS OF PERFORMING THE DEMOLITION. THIS PLAN MAKES NO INQUIRY OR DETERMINATION AS TO THE EXISTENCE OF ANY HAZARDOUS OR TOXIC MATERIALS EXISTING ON THE SITE.
12. THE REQUIRED DEMOLITION OF LIGHTING AND CONDUITS TO BE PREFORMED IF NECESSARY PER LIGHTING CONSULTANT RECOMMENDATIONS.
13. ENVIRONMENTAL CONCERNS ARE BEYOND THE INTENT OF THIS PLAN.

CONSTRUCTION NOTES

1. PROTECT EXISTING IMPROVEMENTS IN PLACE.
2. LIMIT OF CONSTRUCTION.
3. REMOVE AND DISPOSE EXISTING ASPHALT PAVEMENT.
4. REMOVE AND DISPOSE EXISTING CONCRETE PAVEMENT.
5. REMOVE AND SALVAGE EXISTING FIRE HYDRANT. FIRE HYDRANT TO BE RELOCATED. REFER TO SHEET C10.0.
6. REMOVE AND DISPOSE EXISTING CHAIN LINK FENCE.
7. REMOVE AND DISPOSE EXISTING BOLLARD.
8. REMOVE AND DISPOSE EXISTING LIGHT POLE. MAST AND ARM TO BE SALVAGED FOR REUSE. SALVAGED POLE AND MAST TO BE PROVIDED TO FACILITY MANAGEMENT.
9. REMOVE CONCRETE CURB OR CURB & GUTTER.
10. CONCRETE SAWCUT LINE.
11. REMOVE AND DISPOSE EXISTING INLET. CONTRACTOR TO SEAL EXISTING PIPE.
12. REMOVE AND DISPOSE EXISTING WATERLINE.
13. REMOVE EXISTING WALL STRUCTURE.
14. PROTECT IN PLACE EXISTING MANHOLE. RIM ELEVATION TO BE ADJUSTED TO GRADE PER SHEETS C5.0–C5.2.
15. REMOVE EXISTING SIDEWALK.
16. REMOVE TOPSOIL AND ORGANICS FROM EXISTING UNPAVED AREA PRIOR TO GRADING.
17. PROTECT IN PLACE EXISTING POWER POLE IF UNDERGROUNDING OF THE ELECTRIC LINES IS NOT SELECTED. ADDITIONAL SUPPORT TO BE PROVIDED DURING CONSTRUCTION OF PROPOSED ADJACENT RETAINING WALL.
18. REMOVE AND DISPOSE EXISTING SANITARY SEWER LINE.
19. REMOVE AND DISPOSE EXISTING STORM DRAIN.

LEGEND

- 5245 — EXISTING MAJOR CONTOUR
- 5244 — EXISTING MINOR CONTOUR
- EXISTING CHAIN LINK FENCE
- OE — EXISTING OVERHEAD ELECTRIC
- SS — EXISTING SANITARY SEWER
- W — EXISTING WATERLINE
- SD — EXISTING STORM SEWER
- MH — EXISTING MANHOLE
- EXISTING UTILITY POLE
- EXISTING BOLLARD
- EXISTING LIGHT POLE
- EXISTING FIRE HYDRANT
- EXISTING INLET

0 20 30 40
(IN FEET)
1 INCH = 20 FEET

CALL UTILITY NOTIFICATION CENTER OF COLORADO
1-800-922-1987
CALL 2 BUSINESS DAYS IN ADVANCE BEFORE YOU DIG, GRADE, OR EXCAVATE FOR THE MARKING OF UNDERGROUND MEMBER UTILITIES

ENGINEERS NOTE TO CONTRACTOR:

THE EXISTENCE AND LOCATION OF ANY UNDERGROUND UTILITIES, PIPES, AND/OR STRUCTURES SHOWN ON THESE PLANS WERE OBTAINED BY A SEARCH OF AVAILABLE RECORDS. TO THE BEST OF OUR KNOWLEDGE, THERE ARE NO EXISTING UTILITIES EXCEPT AS SHOWN ON THESE PLANS. THE CONTRACTOR SHALL ASCERTAIN THE TRUE VERTICAL AND HORIZONTAL LOCATION OF THOSE UNDERGROUND UTILITIES TO BE USED AND SHALL BE RESPONSIBLE FOR ANY DAMAGE TO ANY PUBLIC OR PRIVATE UTILITIES, SHOWN OR NOT SHOWN HEREON.

BASIS OF BEARINGS:

BEARINGS BASED ON THE NORTH LINE OF LOT 3 AS NORTH 88°03'20" EAST BETWEEN MONUMENTS SHOWN ON THE TOPOGRAPHIC SURVEY.

BENCH MARK

MARTIN/MARTIN ENGINEERING PROJECT BENCHMARK, USGS DISK STAMPED Y259 (LAT 33°46'33", LONG 104°55'49") ELEVATION 5257.26 (NGVD 29 5257.37 RECORD)

CITY AND COUNTY OF DENVER
Development Services
Site Engineering
DS Project NO. PR-2011-065 (2011-0177)
PROJECT NAME: SAFEWAY DISTRIBUTION CENTER

DESIGNED BY DAP	DATE 10-24-10	DATE ISSUED: 09-28-11	DRAWING NO.
DRAWN BY DAP	DATE 10-24-10		C3.0
CHECKED BY AEH	DATE 09-28-11	SHEET 6 OF 49 SHEETS	

PREPARED UNDER THE SUPERVISION OF TAIT & ASSOCIATES, INC.
ALEX HOIME, PE 41703 DATE
COLORADO LICENSED ALEX HOIME 41703 PROFESSIONAL ENGINEER

NO.	DESCRIPTION	BY	DATE
	REVISIONS		

TAIT & ASSOCIATES, INC.
6163 EAST COUNTY ROAD 16
LOVELAND, CO 80537
(970) 613-1447 TEL
(970) 613-1897 FAX
www.tait.com

TAIT

DEMOLITION PLAN
NORTH EMPLOYEE AND VISITOR PARKING AREA
SWC I-70 AND DAHLIA STREET ,DENVER, CO
SAFEWAY INC.

DRAWN: DAP
DATE: 10-24-10
CHECKED: AEH
DATE: 09-28-11
REVISION #: ----
DATE: ----
JOB NO: CO1176F

C3.0

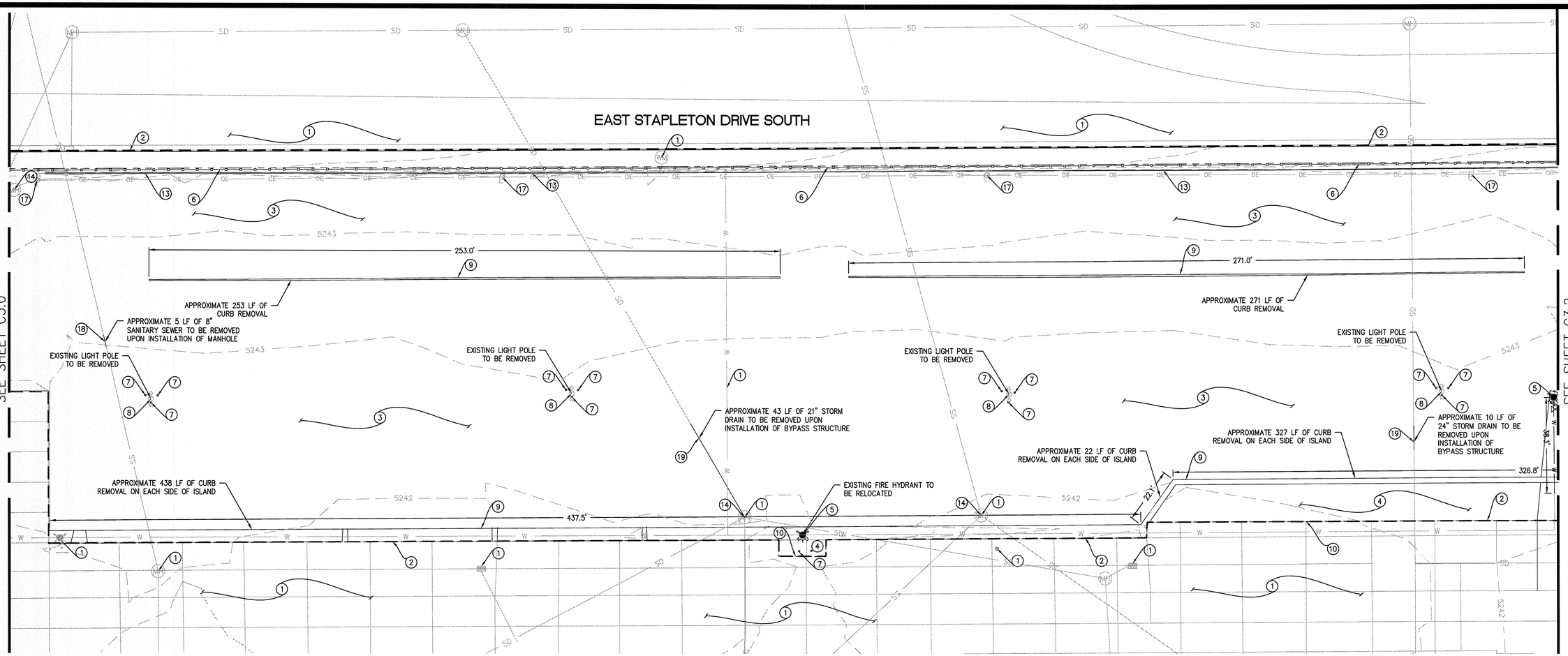

CONSTRUCTION NOTES

1. PROTECT EXISTING IMPROVEMENTS IN PLACE.
2. LIMIT OF CONSTRUCTION.
3. REMOVE AND DISPOSE EXISTING ASPHALT PAVEMENT.
4. REMOVE AND DISPOSE EXISTING CONCRETE PAVEMENT.
5. REMOVE AND SALVAGE EXISTING FIRE HYDRANT. FIRE HYDRANT TO BE RELOCATED. REFER TO SHEET C10.0.
6. REMOVE AND DISPOSE EXISTING CHAIN LINK FENCE.
7. REMOVE AND DISPOSE EXISTING BOLLARD.
8. REMOVE AND DISPOSE EXISTING LIGHT POLE. MAST AND ARM TO BE SALVAGED FOR REUSE. SALVAGED POLE AND MAST TO BE PROVIDED TO FACILITY MANAGEMENT.
9. REMOVE CONCRETE CURB OR CURB & GUTTER.
10. CONCRETE SAWCUT LINE.
11. REMOVE AND DISPOSE EXISTING INLET. CONTRACTOR TO SEAL EXISTING PIPE.
12. REMOVE AND DISPOSE EXISTING WATERLINE.
13. REMOVE EXISTING WALL STRUCTURE.
14. PROTECT IN PLACE EXISTING MANHOLE. RIM ELEVATION TO BE ADJUSTED TO GRADE PER SHEETS C5.0–C5.2.
15. REMOVE EXISTING SIDEWALK.
16. REMOVE TOPSOIL AND ORGANICS FROM EXISTING UNPAVED AREA PRIOR TO GRADING.
17. PROTECT IN PLACE EXISTING POWER POLE IF UNDERGROUNDING OF THE ELECTRIC LINES IS NOT SELECTED. ADDITIONAL SUPPORT TO BE PROVIDED DURING CONSTRUCTION OF PROPOSED ADJACENT RETAINING WALL.
18. REMOVE AND DISPOSE EXISTING SANITARY SEWER LINE.
19. REMOVE AND DISPOSE EXISTING STORM DRAIN.

LEGEND

- 5245 — EXISTING MAJOR CONTOUR
- 5244 — EXISTING MINOR CONTOUR
- EXISTING CHAIN LINK FENCE
- OE — EXISTING OVERHEAD ELECTRIC
- SS — EXISTING SANITARY SEWER
- W — EXISTING WATERLINE
- SD — EXISTING STORM SEWER
- EXISTING MANHOLE
- EXISTING UTILITY POLE
- EXISTING BOLLARD
- EXISTING LIGHT POLE
- EXISTING FIRE HYDRANT
- EXISTING INLET

0 20 30 40
(IN FEET)
1 INCH = 20 FEET

CALL UTILITY NOTIFICATION CENTER OF COLORADO

1–800–922–1987

CALL 2 BUSINESS DAYS IN ADVANCE BEFORE YOU DIG, GRADE, OR EXCAVATE FOR THE MARKING OF UNDERGROUND MEMBER UTILITIES

ENGINEERS NOTE TO CONTRACTOR:

THE EXISTENCE AND LOCATION OF ANY UNDERGROUND UTILITIES, PIPES, AND/OR STRUCTURES SHOWN ON THESE PLANS WERE OBTAINED BY A SEARCH OF AVAILABLE RECORDS. TO THE BEST OF OUR KNOWLEDGE, THERE ARE NO EXISTING UTILITIES EXCEPT AS SHOWN ON THESE PLANS. THE CONTRACTOR SHALL ASCERTAIN THE TRUE VERTICAL AND HORIZONTAL LOCATION OF THOSE UNDERGROUND UTILITIES TO BE USED AND SHALL BE RESPONSIBLE FOR ANY DAMAGE TO ANY PUBLIC OR PRIVATE UTILITIES, SHOWN OR NOT SHOWN HEREON.

BASIS OF BEARINGS:

BEARINGS BASED ON THE NORTH LINE OF LOT 3 AS NORTH 88°03'20" EAST BETWEEN MONUMENTS SHOWN ON THE TOPOGRAPHIC SURVEY.

BENCH MARK

MARTIN/MARTIN ENGINEERING PROJECT BENCHMARK, USGS DISK STAMPED Y259 (LAT 33°46'33", LONG 104°55'49") ELEVATION 5257.26 (NGVD 29 5257.37 RECORD)

CITY AND COUNTY OF DENVER
Development Services
Site Engineering

DS Project NO. PR-2011-065 (2011-0177)

PROJECT NAME: SAFEWAY DISTRIBUTION CENTER

DESIGNED BY DAP	DATE 10-24-10	DATE ISSUED: 09-28-11	DRAWING NO. C3.1
DRAWN BY DAP	DATE 10-24-10		
CHECKED BY AEH	DATE 09-28-11	SHEET 7 OF 48 SHEETS	

PREPARED UNDER THE SUPERVISION OF TAIT & ASSOCIATES, INC.

ALEX HOWE, PE 41703 — DATE 9-28-11

COLORADO LICENSED ALEX HOWE 41703 PROFESSIONAL ENGINEER

NO.	DESCRIPTION	BY	DATE
	REVISIONS		

TAIT & ASSOCIATES, INC.
6163 EAST COUNTY ROAD 16
LOVELAND, CO 80537
(970) 613-1447 TEL
(970) 613-1897 FAX
www.tait.com

DEMOLITION PLAN

NORTH EMPLOYEE AND VISITOR PARKING AREA
SWC I-70 AND DAHLIA STREET, DENVER, CO
SAFEWAY INC.

DRAWN: DAP
DATE: 10-24-10
CHECKED: AEH
DATE: 09-28-11
REVISION #: 4
DATE: 09-22-11
JOB NO: CO1176F

C3.1

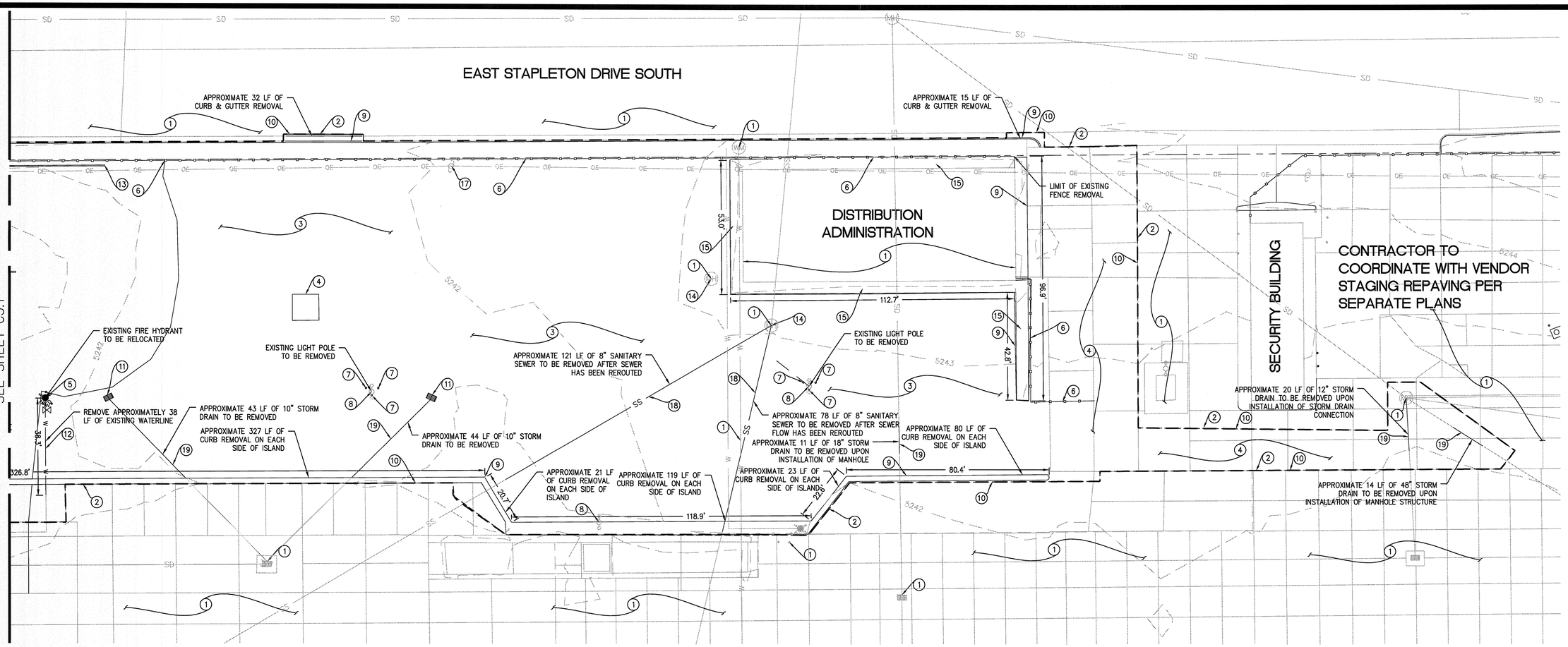

CONSTRUCTION NOTES

1. PROTECT EXISTING IMPROVEMENTS IN PLACE.
2. LIMIT OF CONSTRUCTION.
3. REMOVE AND DISPOSE EXISTING ASPHALT PAVEMENT.
4. REMOVE AND DISPOSE EXISTING CONCRETE PAVEMENT.
5. REMOVE AND SALVAGE EXISTING FIRE HYDRANT. FIRE HYDRANT TO BE RELOCATED. REFER TO SHEET C10.0.
6. REMOVE AND DISPOSE EXISTING CHAIN LINK FENCE.
7. REMOVE AND DISPOSE EXISTING BOLLARD.
8. REMOVE AND DISPOSE EXISTING LIGHT POLE. MAST AND ARM TO BE SALVAGED FOR REUSE. SALVAGED POLE AND MAST TO BE PROVIDED TO FACILITY MANAGEMENT.
9. REMOVE CONCRETE CURB OR CURB & GUTTER.
10. CONCRETE SAWCUT LINE.
11. REMOVE AND DISPOSE EXISTING INLET. CONTRACTOR TO SEAL EXISTING PIPE.
12. REMOVE AND DISPOSE EXISTING WATERLINE.
13. REMOVE EXISTING WALL STRUCTURE.
14. PROTECT IN PLACE EXISTING MANHOLE. RIM ELEVATION TO BE ADJUSTED TO GRADE PER SHEETS C5.0–C5.2.
15. REMOVE EXISTING SIDEWALK.
16. REMOVE TOPSOIL AND ORGANICS FROM EXISTING UNPAVED AREA PRIOR TO GRADING.
17. PROTECT IN PLACE EXISTING POWER POLE IF UNDERGROUNDING OF THE ELECTRIC LINES IS NOT SELECTED. ADDITIONAL SUPPORT TO BE PROVIDED DURING CONSTRUCTION OF PROPOSED ADJACENT RETAINING WALL.
18. REMOVE AND DISPOSE EXISTING SANITARY SEWER LINE.
19. REMOVE AND DISPOSE EXISTING STORM DRAIN.

LEGEND

- 5245 — EXISTING MAJOR CONTOUR
- 5244 — EXISTING MINOR CONTOUR
- EXISTING CHAIN LINK FENCE
- OE — EXISTING OVERHEAD ELECTRIC
- SS — EXISTING SANITARY SEWER
- W — EXISTING WATERLINE
- SD — EXISTING STORM SEWER
- MH — EXISTING MANHOLE
- EXISTING UTILITY POLE
- EXISTING BOLLARD
- EXISTING LIGHT POLE
- EXISTING FIRE HYDRANT
- EXISTING INLET

0 20 30 40
(IN FEET)
1 INCH = 20 FEET

CALL UTILITY NOTIFICATION CENTER OF COLORADO
1-800-922-1987
CALL 2 BUSINESS DAYS IN ADVANCE BEFORE YOU DIG, GRADE, OR EXCAVATE FOR THE MARKING OF UNDERGROUND MEMBER UTILITIES

ENGINEERS NOTE TO CONTRACTOR:

THE EXISTENCE AND LOCATION OF ANY UNDERGROUND UTILITIES, PIPES, AND/OR STRUCTURES SHOWN ON THESE PLANS WERE OBTAINED BY A SEARCH OF AVAILABLE RECORDS. TO THE BEST OF OUR KNOWLEDGE, THERE ARE NO EXISTING UTILITIES EXCEPT AS SHOWN ON THESE PLANS. THE CONTRACTOR SHALL ASCERTAIN THE TRUE VERTICAL AND HORIZONTAL LOCATION OF THOSE UNDERGROUND UTILITIES TO BE USED AND SHALL BE RESPONSIBLE FOR ANY DAMAGE TO ANY PUBLIC OR PRIVATE UTILITIES, SHOWN OR NOT SHOWN HEREON.

BASIS OF BEARINGS:

BEARINGS BASED ON THE NORTH LINE OF LOT 3 AS NORTH 88°03'20" EAST BETWEEN MONUMENTS SHOWN ON THE TOPOGRAPHIC SURVEY.

BENCH MARK

MARTIN/MARTIN ENGINEERING PROJECT BENCHMARK, USGS DISK STAMPED Y259 (LAT 33°46'33", LONG 104°55'49") ELEVATION 5257.26 (NGVD 29 5257.37 RECORD)

CITY AND COUNTY OF DENVER
Development Services
Site Engineering
DS Project NO. PR-2011-065 (2011-0177)
PROJECT NAME: SAFEWAY DISTRIBUTION CENTER

DESIGNED BY DAP	DATE 10-24-10	DATE ISSUED: 09-28-11	DRAWING NO.
DRAWN BY DAP	DATE 10-24-10		C3.2
CHECKED BY AEH	DATE 09-26-11	SHEET 8 OF 49 SHEETS	

PREPARED UNDER THE SUPERVISION OF TAIT & ASSOCIATES, INC.
ALEX HOME, PE 41703
9-28-11
DATE
COLORADO LICENSED ALEX HOME 41703 PROFESSIONAL ENGINEER

NO.	DESCRIPTION	BY	DATE
	REVISIONS		

TAIT & ASSOCIATES, INC.
6163 EAST COUNTY ROAD 16
LOVELAND, CO 80537
(970) 613-1447 TEL
(970) 613-1897 FAX
www.tait.com

TAIT

DEMOLITION PLAN

NORTH EMPLOYEE AND VISITOR PARKING AREA
SWC I-70 AND DAHLIA STREET, DENVER, CO
SAFEWAY INC.

DRAWN: DAP
DATE: 10-24-10
CHECKED: AEH
DATE: 09-26-11
REVISION #: 4
DATE: 09-22-11
JOB NO: CO1176F

C3.2

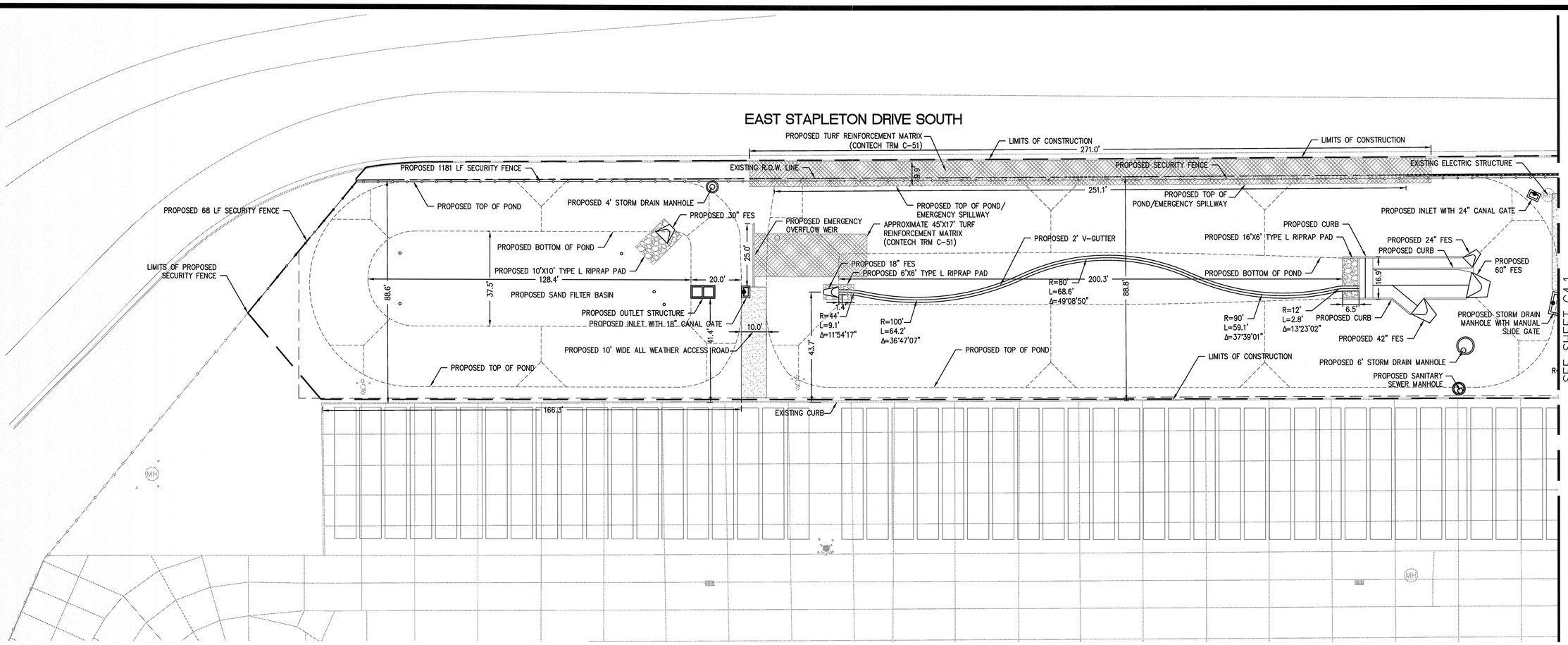

LEGEND

- LIMIT OF CONSTRUCTION
- EXISTING CHAIN LINK FENCE
- EXISTING MANHOLE
- EXISTING UTILITY POLE
- EXISTING BOLLARD
- EXISTING LIGHT POLE
- EXISTING FIRE HYDRANT
- PROPOSED CHAIN LINK FENCE
- PROPOSED MANHOLE
- PROPOSED TURNSTILE
- PROPOSED CONCRETE BARRIER
- PROPOSED BOLLARD
- PROPOSED FIRE HYDRANT
- PROPOSED LIGHT POLE
- PROPOSED MANUAL GATE
- PROPOSED TRAILER LOCATION

ABBREVIATIONS:

C	CURVE
FES	FLARED END SECTION
L	LENGTH
LF	LINEAR FEET
SF	SQUARE FOOT
(TYP.)	TYPICAL
QTY	QUANTITY
R	RADIUS
R.O.W.	RIGHT-OF-WAY

0 20 30 40

(IN FEET)
1 INCH = 20 FEET

CALL UTILITY NOTIFICATION CENTER OF COLORADO

1-800-922-1987

CALL 2 BUSINESS DAYS IN ADVANCE BEFORE YOU DIG, GRADE, OR EXCAVATE FOR THE MARKING OF UNDERGROUND MEMBER UTILITIES

ENGINEERS NOTE TO CONTRACTOR:

THE EXISTENCE AND LOCATION OF ANY UNDERGROUND UTILITIES, PIPES, AND/OR STRUCTURES SHOWN ON THESE PLANS WERE OBTAINED BY A SEARCH OF AVAILABLE RECORDS. TO THE BEST OF OUR KNOWLEDGE, THERE ARE NO EXISTING UTILITIES EXCEPT AS SHOWN ON THESE PLANS. THE CONTRACTOR SHALL ASCERTAIN THE TRUE VERTICAL AND HORIZONTAL LOCATION OF THOSE UNDERGROUND UTILITIES TO BE USED AND SHALL BE RESPONSIBLE FOR ANY DAMAGE TO ANY PUBLIC OR PRIVATE UTILITIES, SHOWN OR NOT SHOWN HEREON.

BASIS OF BEARINGS:

BEARINGS BASED ON THE NORTH LINE OF LOT 3 AS NORTH 88°03'20" EAST BETWEEN MONUMENTS SHOWN ON THE TOPOGRAPHIC SURVEY.

BENCH MARK

MARTIN/MARTIN ENGINEERING PROJECT BENCHMARK, USGS DISK STAMPED Y259 (LAT 33°46'33", LONG 104°55'49") ELEVATION 5257.26 (NGVD 29 5257.37 RECORD)

CITY AND COUNTY OF DENVER
Development Services
Site Engineering

DS Project NO. PR-2011-065 (2011-0177)

PROJECT NAME: SAFEWAY DISTRIBUTION CENTER

DESIGNED BY	DATE	DATE ISSUED:	DRAWING NO.
DAP	10-24-10	09-28-11	C4.0
DRAWN BY	DATE		
DAP	10-24-10		
CHECKED BY	DATE	SHEET 9 OF 49 SHEETS	
AEH	09-26-11		

PREPARED UNDER THE SUPERVISION OF TAIT & ASSOCIATES, INC.

ALEX HOIME, PE 41703 — DATE 9-28-11

COLORADO LICENSED ALEX HOIME 41703 PROFESSIONAL ENGINEER

NO.	DESCRIPTION	BY	DATE
	REVISIONS		

TAIT & ASSOCIATES, INC.
6163 EAST COUNTY ROAD 16
LOVELAND, CO 80537
(970) 613-1447 TEL
(970) 613-1897 FAX
www.tait.com

TAIT

HORIZONTAL CONTROL PLAN

NORTH EMPLOYEE AND VISITOR PARKING AREA
SWC I-70 AND DAHLIA STREET ,DENVER, CO
SAFEWAY INC.

DRAWN: DAP
DATE: 10-24-10
CHECKED: AEH
DATE: 09-26-11
REVISION #: 2
DATE: 08-16-11
JOB NO: CO1176F

C4.0

CITY OF DENVER APPROVAL SET - 09/28/11

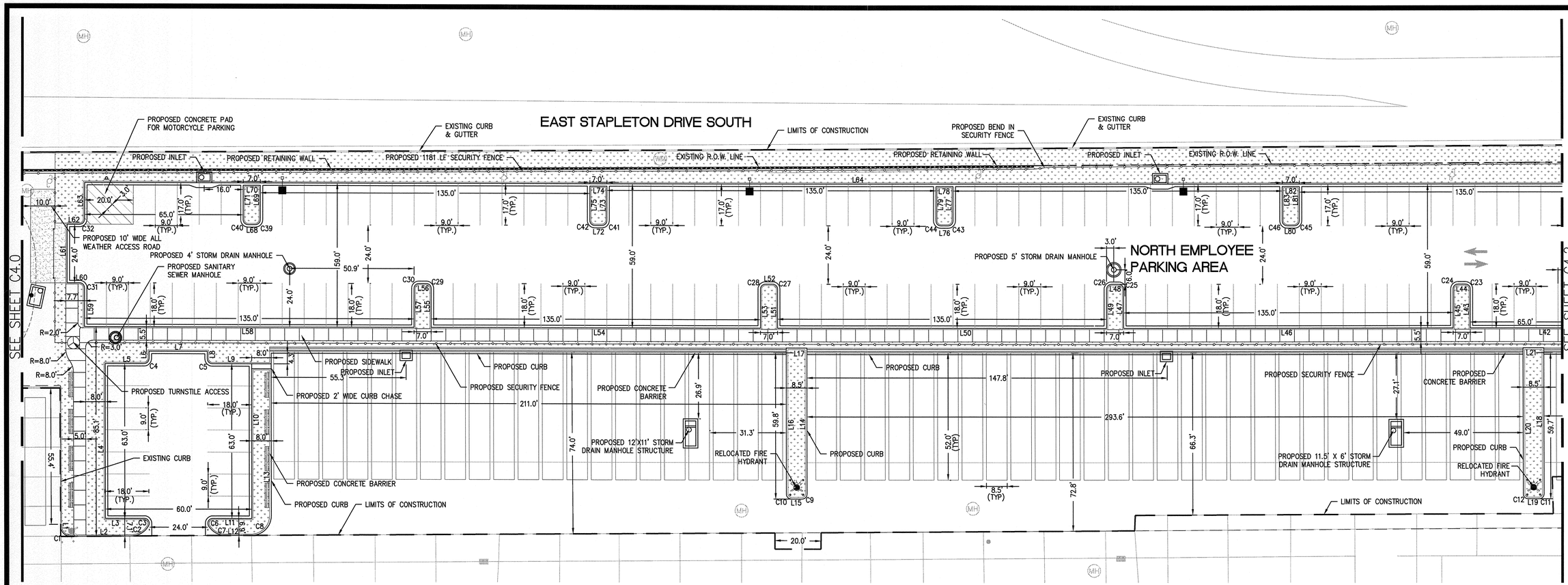

LEGEND

- LIMIT OF CONSTRUCTION
- EXISTING CHAIN LINK FENCE
- EXISTING MANHOLE
- EXISTING UTILITY POLE
- EXISTING BOLLARD
- EXISTING LIGHT POLE
- EXISTING FIRE HYDRANT
- PROPOSED CHAIN LINK FENCE
- PROPOSED MANHOLE
- PROPOSED TURNSTILE
- PROPOSED CONCRETE BARRIER
- PROPOSED BOLLARD
- PROPOSED FIRE HYDRANT
- PROPOSED LIGHT POLE
- PROPOSED MANUAL GATE
- PROPOSED TRAILER LOCATION

ABBREVIATIONS:

C	CURVE
FES	FLARED END SECTION
L	LENGTH
LF	LINEAR FEET
SF	SQUARE FOOT
(TYP.)	TYPICAL
QTY	QUANTITY
R	RADIUS
R.O.W.	RIGHT-OF-WAY

CALL UTILITY NOTIFICATION CENTER OF COLORADO

1-800-922-1987

CALL 2 BUSINESS DAYS IN ADVANCE BEFORE YOU DIG, GRADE, OR EXCAVATE FOR THE MARKING OF UNDERGROUND MEMBER UTILITIES

ENGINEERS NOTE TO CONTRACTOR:

THE EXISTENCE AND LOCATION OF ANY UNDERGROUND UTILITIES, PIPES, AND/OR STRUCTURES SHOWN ON THESE PLANS WERE OBTAINED BY A SEARCH OF AVAILABLE RECORDS. TO THE BEST OF OUR KNOWLEDGE, THERE ARE NO EXISTING UTILITIES EXCEPT AS SHOWN ON THESE PLANS. THE CONTRACTOR SHALL ASCERTAIN THE TRUE VERTICAL AND HORIZONTAL LOCATION OF THOSE UNDERGROUND UTILITIES TO BE USED AND SHALL BE RESPONSIBLE FOR ANY DAMAGE TO ANY PUBLIC OR PRIVATE UTILITIES, SHOWN OR NOT SHOWN HEREON.

LINE TABLE

LINE	LENGTH	BEARING
L1	0.90	S00°08'25"E
L2	25.09	N89°39'16"E
L3	16.00	N90°00'00"W
L4	63.00	N00°00'00"E
L5	16.00	N90°00'00"W
L6	3.00	N00°00'00"E
L7	23.88	N90°00'00"W
L8	3.00	S00°00'00"E
L9	16.12	N90°00'00"W
L10	63.00	S00°00'00"W
L11	16.00	N90°00'00"W
L12	10.86	N89°39'17"E
L13	66.83	N00°00'00"E
L14	59.69	S00°00'00"W
L15	4.50	N90°00'00"W
L16	59.69	N00°00'00"E
L17	8.50	N90°00'00"W
L18	59.66	S00°00'00"W
L19	4.50	N90°00'00"W
L20	59.66	N00°00'00"E
L21	8.50	N90°00'00"W
L22	2.18	S00°00'00"E
L23	77.22	S89°33'39"W
L24	26.58	S37°51'29"W
L25	113.26	S89°47'05"W
L26	22.48	N60°00'00"W
L27	5.20	N60°00'00"W
L28	23.84	N00°00'00"W
L29	45.00	N90°00'00"W
L30	17.32	S00°00'00"E
L31	49.03	N00°00'00"E
L32	90.48	S89°50'14"W
L33	18.22	S30°00'00"W
L34	103.79	S89°38'27"W
L35	9.00	N60°00'00"E
L36	10.88	N30°00'00"E
L37	26.14	N00°00'00"E
L38	95.74	N90°00'00"W
L39	3.00	N00°00'00"E
L40	9.00	N90°00'00"W
L41	16.00	S00°00'00"E
L42	65.00	N90°00'00"W
L43	16.00	N00°00'00"E
L44	3.00	N90°00'00"W
L45	16.00	S00°00'00"E
L46	135.00	N90°00'00"W
L47	16.00	N00°00'00"E
L48	3.00	N90°00'00"W
L49	16.00	S00°00'00"E
L50	135.00	N90°00'00"W
L51	16.00	N00°00'00"E
L52	3.00	N90°00'00"W
L53	16.00	S00°00'00"E
L54	135.00	N90°00'00"W
L55	16.00	N00°00'00"E
L56	3.00	N90°00'00"W
L57	16.00	S00°00'00"E
L58	135.00	N90°00'00"W
L59	16.00	N00°00'00"W
L60	5.16	N90°00'00"W
L61	24.00	N00°00'00"E
L62	5.16	N90°00'00"E
L63	15.00	N00°00'00"E
L64	633.00	S90°00'00"E
L65	15.00	S00°00'00"E
L66	1.00	N00°00'00"E
L67	33.43	S90°00'00"E
L68	3.00	N90°00'00"E
L69	14.00	N00°00'00"E
L70	7.00	N90°00'00"W
L71	14.00	S00°00'00"E
L72	3.00	N90°00'00"E
L73	14.00	N00°00'00"E
L74	7.00	N90°00'00"W
L75	14.00	S00°00'00"E
L76	3.00	N90°00'00"E
L77	14.00	N00°00'00"E
L78	7.00	N90°00'00"W
L79	14.00	S00°00'00"E
L80	3.00	N90°00'00"E
L81	14.00	N00°00'00"E
L82	7.00	N90°00'00"W
L83	14.00	S00°00'00"E
L84	6.33	N23°40'32"W
L85	14.35	N90°00'00"W
L86	12.00	S00°00'00"E
L87	80.24	S90°00'00"E
L88	28.77	S90°00'00"W
L89	9.76	S30°00'00"W
L90	34.39	N90°00'00"E
L91	8.69	N90°00'00"E
L92	2.00	N00°00'00"E
L93	15.00	N90°00'00"W
L94	27.00	N00°00'00"E
L95	15.00	N90°00'00"E
L96	2.00	N00°00'00"E
L97	24.00	N90°00'00"E
L98	2.00	S00°00'00"W
L99	15.00	S90°00'00"E
L100	27.00	S00°00'00"W
L101	15.00	N90°00'00"W
L102	2.08	S00°00'00"E
L103	139.74	N90°00'00"E
L104	42.98	S00°00'00"E
L105	88.26	N00°00'00"E
L106	3.42	S89°19'27"W
L107	20.21	S30°00'00"E
L108	9.00	S60°00'00"W
L109	11.55	S30°00'00"E
L110	9.22	N00°00'00"E
L111	12.12	S30°00'00"E
L112	3.00	S60°00'00"W
L113	11.83	S30°00'00"E
L114	16.05	N00°00'00"E
L115	4.77	N90°00'00"W
L116	14.87	N90°00'00"E
L117	15.55	N00°00'00"E
L118	1.00	N90°00'00"W
L119	3.38	S00°00'00"E
L120	2.17	S00°00'00"E
L121	1.00	N90°00'00"E
L122	47.05	N00°00'00"E
L123	47.05	S00°00'00"E

CURVE TABLE

CURVE	LENGTH	RADIUS	DELTA	CHORD	CHORD BEARING
C1	6.30	4.00	90°12'19"	5.67	S45°14'34"E
C2	8.53	8.00	61°05'05"	8.13	N59°06'44"E
C3	4.14	2.00	118°34'12"	3.44	N30°42'54"W
C4	3.14	2.00	90°00'05"	2.83	N45°00'03"E
C5	3.14	2.00	89°59'55"	2.83	S44°59'57"E
C6	4.23	2.00	121°08'00"	3.48	S29°26'06"W
C7	8.27	8.00	59°12'49"	7.90	S60°04'19"E
C8	12.52	8.00	89°39'11"	11.28	N44°49'41"E
C9	3.14	2.00	90°00'00"	2.83	N45°00'05"E
C10	3.14	2.00	90°00'00"	2.83	S44°59'55"E
C11	3.14	2.00	90°00'00"	2.83	N45°00'05"E
C12	3.14	2.00	90°00'00"	2.83	S44°59'55"E
C13	1.58	3.00	30°12'40"	1.56	S75°03'00"E
C14	3.14	3.00	60°00'00"	3.00	S30°00'00"E
C15	9.42	3.00	180°00'00"	6.00	N90°00'00"E
C16	3.13	3.00	59°50'14"	2.99	S59°55'07"W
C17	5.33	3.00	101°52'10"	4.66	N20°56'05"W
C18	25.09	20.00	71°52'10"	23.47	S35°56'05"E
C19	15.71	10.00	90°00'00"	14.14	N45°00'00"W
C20	15.71	10.00	90°00'00"	14.14	S45°00'00"E
C21	9.42	6.00	90°00'00"	8.49	N45°00'00"W
C22	3.14	2.00	90°00'00"	2.83	S45°00'00"W
C23	3.14	2.00	90°00'00"	2.83	N45°00'00"W
C24	3.14	2.00	90°00'00"	2.83	S45°00'00"W
C25	3.14	2.00	90°00'00"	2.83	N45°00'00"W
C26	3.14	2.00	90°00'00"	2.83	S45°00'00"W
C27	3.14	2.00	90°00'00"	2.83	N45°00'00"W
C28	3.14	2.00	90°00'00"	2.83	S45°00'00"W
C29	3.14	2.00	90°00'00"	2.83	N45°00'00"W
C30	3.14	2.00	90°00'00"	2.83	S45°00'00"W
C31	3.14	2.00	90°00'00"	2.83	N45°00'00"W
C32	3.14	2.00	90°00'00"	2.83	N45°00'00"E
C33	3.14	2.00	90°00'00"	2.83	S45°00'00"E
C34	9.42	6.00	90°00'00"	8.49	N45°00'00"E
C35	15.71	10.00	90°00'00"	14.14	S45°00'00"W
C36	10.17	8.00	72°48'55"	9.50	N53°35'33"E
C37	3.96	36.00	6°18'02"	3.96	S20°20'06"W
C38	9.92	5.00	113°41'53"	8.37	N33°21'50"W
C39	3.14	2.00	90°00'00"	2.83	N45°00'00"E
C40	3.14	2.00	90°00'00"	2.83	S45°00'00"E
C41	3.14	2.00	90°00'00"	2.83	N45°00'00"E
C42	3.14	2.00	90°00'00"	2.83	S45°00'00"E
C43	3.14	2.00	90°00'00"	2.83	N45°00'00"E
C44	3.14	2.00	90°00'00"	2.83	S45°00'00"E
C45	3.14	2.00	90°00'00"	2.83	N45°00'00"E
C46	3.14	2.00	90°00'00"	2.83	S45°00'00"E
C47	0.45	36.00	0°42'47"	0.45	S18°16'36"E
C48	3.77	3.00	72°04'47"	3.53	N53°57'36"W
C49	15.71	10.00	90°00'00"	14.14	S45°00'00"W
C50	15.71	10.00	90°00'00"	14.14	S45°00'00"E
C51	7.85	2.50	180°00'00"	5.00	N00°00'00"E
C52	38.50	36.00	61°16'56"	36.70	S59°21'32"E
C53	6.21	6.00	59°19'27"	5.94	S59°39'43"W
C54	41.89	20.00	120°00'00"	34.64	S30°00'00"E
C55	23.87	25.00	54°42'20"	22.97	N62°38'50"W
C56	19.10	20.00	54°42'20"	18.38	S62°38'50"E
C57	8.05	5.00	92°17'31"	7.21	N43°51'14"E
C58	4.59	3.00	87°42'29"	4.16	N46°08'46"W
C59	4.71	3.00	90°00'00"	4.24	N45°00'00"E
C60	4.71	3.00	90°00'00"	4.24	S45°00'00"E
C61	5.94	3.00	113°24'20"	5.02	S86°42'10"E
C62	3.19	5.00	36°35'40"	7.07	N18°17'50"E
C63	4.09	2.00	117°03'20"	3.41	S58°31'40"E
C64	10.99	10.00	62°56'40"	10.44	N31°28'20"E
C65	15.67	10.00	89°46'57"	14.12	N45°47'05"W
C66	7.60	3.00	145°09'22"	5.72	N42°34'41"E
C67	22.63	20.00	64°50'38"	21.45	S32°25'19"E
C68	9.00	20.00	25°46'09"	8.92	S12°53'04"W
C69	6.50	3.00	124°13'51"	5.30	S87°53'04"W
C70	6.28	3.00	120°00'00"	5.20	S30°00'00"W
C71	4.40	3.00	84°06'06"	4.02	S72°03'03"E
C72	5.75	5.00	65°53'54"	5.44	N32°56'57"E
C73	12.57	8.00	90°00'00"	11.31	N45°00'00"W
C74	7.85	5.00	90°00'00"	7.07	N45°00'00"E
C75	3.14	2.00	90°00'00"	2.83	N45°00'00"W
C76	3.14	2.00	90°00'00"	2.83	S45°00'00"W
C77	23.44	15.00	89°31'05"	21.12	N44°45'33"E
C78	3.14	2.00	90°00'00"	2.83	N45°00'00"E
C79	7.85	2.50	180°00'00"	5.00	N90°00'00"W
C80	3.14	2.00	90°00'00"	2.83	S45°00'00"E

0 20 30 40

(IN FEET)
1 INCH = 20 FEET

BASIS OF BEARINGS:

BEARINGS BASED ON THE NORTH LINE OF LOT 3 AS NORTH 88°03'20" EAST BETWEEN MONUMENTS SHOWN ON THE TOPOGRAPHIC SURVEY.

BENCH MARK

MARTIN/MARTIN ENGINEERING PROJECT BENCHMARK, USGS DISK STAMPED Y259 (LAT 33°46'33", LONG 104°55'49") ELEVATION 5257.26 (NGVD 29 5257.37 RECORD)

CITY AND COUNTY OF DENVER
Development Services
Site Engineering

DS Project NO. PR-2011-065 (2011-0177)

PROJECT NAME: SAFEWAY DISTRIBUTION CENTER

DESIGNED BY	DATE	DATE ISSUED:	DRAWING NO.
DAP	10-24-10	09-28-11	C4.1
DRAWN BY	DATE		
DAP	10-24-10		
CHECKED BY	DATE	SHEET 10 OF 49 SHEETS	
AEH	09-28-11		

PREPARED UNDER THE SUPERVISION OF
TAIT & ASSOCIATES, INC.

ALEX HOIME, PE 41703 — DATE 9-28-11

COLORADO LICENSED ALEX HOIME 41703 PROFESSIONAL ENGINEER

NO.	DESCRIPTION	BY	DATE
	REVISIONS		

TAIT & ASSOCIATES, INC.
6163 EAST COUNTY ROAD 16
LOVELAND, CO 80537
(970) 613-1447 TEL
(970) 613-1897 FAX
www.tait.com

TAIT

HORIZONTAL CONTROL PLAN

NORTH EMPLOYEE AND VISITOR PARKING AREA
SWC I-70 AND DAHLIA STREET ,DENVER, CO
SAFEWAY INC.

DRAWN: DAP
DATE: 10-24-10
CHECKED: AEH
DATE: 09-28-11
REVISION #: 2
DATE: 08-16-11
JOB NO: CO1176F

C4.1

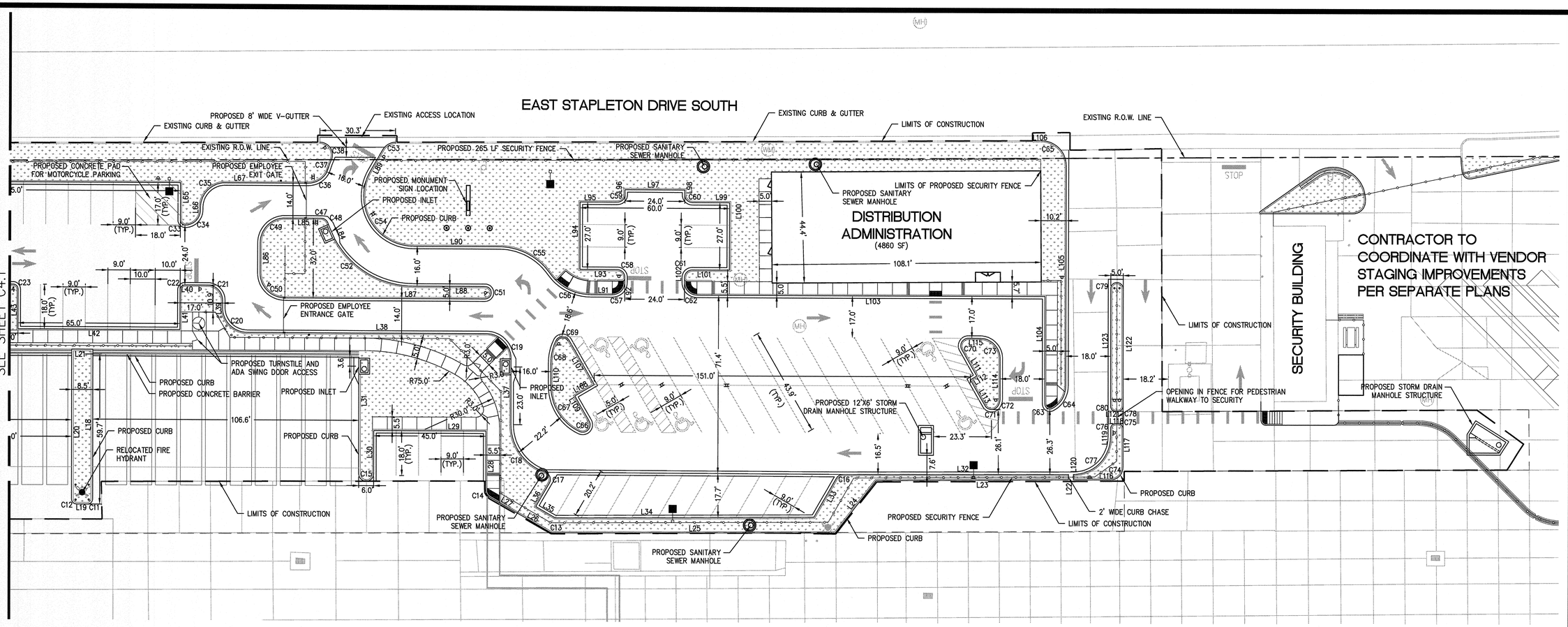

LEGEND

- LIMIT OF CONSTRUCTION
- EXISTING CHAIN LINK FENCE
- EXISTING MANHOLE
- EXISTING UTILITY POLE
- EXISTING BOLLARD
- EXISTING LIGHT POLE
- EXISTING FIRE HYDRANT
- PROPOSED CHAIN LINK FENCE
- PROPOSED MANHOLE
- PROPOSED TURNSTILE
- PROPOSED CONCRETE BARRIER
- PROPOSED BOLLARD
- PROPOSED FIRE HYDRANT
- PROPOSED LIGHT POLE
- PROPOSED MANUAL GATE
- PROPOSED TRAILER LOCATION

ABBREVIATIONS:

C	CURVE
FES	FLARED END SECTION
L	LENGTH
LF	LINEAR FEET
SF	SQUARE FOOT
(TYP.)	TYPICAL
QTY	QUANTITY
R	RADIUS
R.O.W.	RIGHT-OF-WAY

PARKING QUANTITIES

STANDARD VISITOR / ADMINISTRATION QTY: 37

ADA VISITOR / ADIMINISTRATION QTY: 7 (1 VAN)

ON-SITE VISITOR PARKING QTY: 14

STANDARD EMPLOYEE QTY: 130

MOTORCYCLE PARKING QTY: 16

ON-SITE EMPLOYEE PARKING QTY: 5

0 20 30 40

(IN FEET)
1 INCH = 20 FEET

CALL UTILITY NOTIFICATION CENTER OF COLORADO

1-800-922-1987

CALL 2 BUSINESS DAYS IN ADVANCE BEFORE YOU DIG, GRADE, OR EXCAVATE FOR THE MARKING OF UNDERGROUND MEMBER UTILITIES

ENGINEERS NOTE TO CONTRACTOR:

THE EXISTENCE AND LOCATION OF ANY UNDERGROUND UTILITIES, PIPES, AND/OR STRUCTURES SHOWN ON THESE PLANS WERE OBTAINED BY A SEARCH OF AVAILABLE RECORDS. TO THE BEST OF OUR KNOWLEDGE, THERE ARE NO EXISTING UTILITIES EXCEPT AS SHOWN ON THESE PLANS. THE CONTRACTOR SHALL ASCERTAIN THE TRUE VERTICAL AND HORIZONTAL LOCATION OF THOSE UNDERGROUND UTILITIES TO BE USED AND SHALL BE RESPONSIBLE FOR ANY DAMAGE TO ANY PUBLIC OR PRIVATE UTILITIES, SHOWN OR NOT SHOWN HEREON.

BASIS OF BEARINGS:

BEARINGS BASED ON THE NORTH LINE OF LOT 3 AS NORTH 88°03'20" EAST BETWEEN MONUMENTS SHOWN ON THE TOPOGRAPHIC SURVEY.

BENCH MARK

MARTIN/MARTIN ENGINEERING PROJECT BENCHMARK, USGS DISK STAMPED Y259 (LAT 33°46'33", LONG 104°55'49") ELEVATION 5257.26 (NGVD 29 5257.37 RECORD)

CITY AND COUNTY OF DENVER
Development Services
Site Engineering

DS Project NO. PR-2011-065 (2011-0177)

PROJECT NAME: SAFEWAY DISTRIBUTION CENTER

DESIGNED BY	DATE	DATE ISSUED:	DRAWING NO.
DAP	10-24-10	09-28-11	C4.2
DRAWN BY	DATE		
DAP	10-24-10		
CHECKED BY	DATE	SHEET 11 OF 49 SHEETS	
AEH	09-26-11		

PREPARED UNDER THE SUPERVISION OF TAIT & ASSOCIATES, INC.

ALEX HOIME, PE 41703

9-28-11
DATE

COLORADO LICENSED ALEX HOIME 41703 PROFESSIONAL ENGINEER

NO.	DESCRIPTION	BY	DATE
	REVISIONS		

TAIT & ASSOCIATES, INC.
6163 EAST COUNTY ROAD 16
LOVELAND, CO 80537
(970) 613-1447 TEL
(970) 613-1897 FAX
www.tait.com

TAIT

HORIZONTAL CONTROL PLAN

NORTH EMPLOYEE AND VISITOR PARKING AREA
SWC I-70 AND DAHLIA STREET ,DENVER, CO
SAFEWAY INC.

DRAWN: DAP
DATE: 10-24-10
CHECKED: AEH
DATE: 09-26-11
REVISION #: 2
DATE: 08-16-11
JOB NO: CO1176F

C4.2

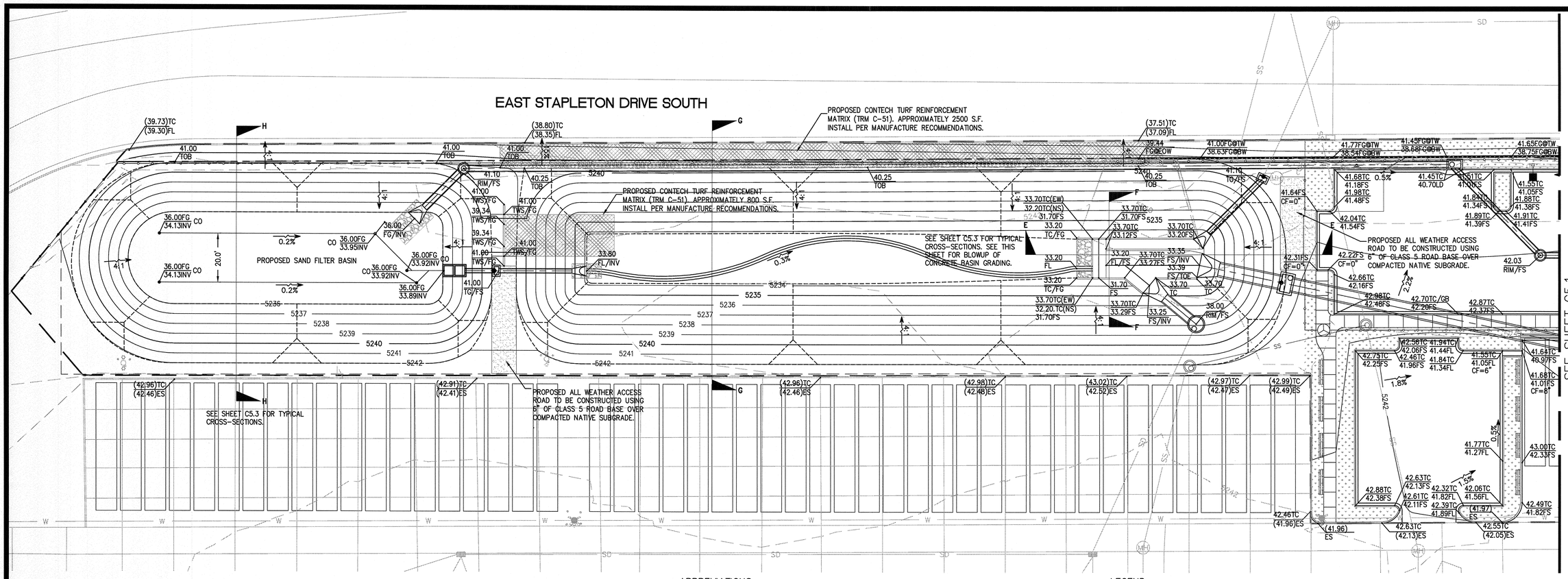

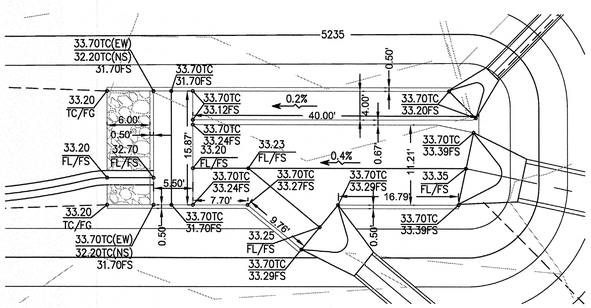

CONCRETE BASIN GRADING DETAIL

1"=10'

NOTE: CONSTRUCT 6" THICK, 4000 PSI CONCRETE BASIN WITH #4 @ 12" O.C. EACH WAY, OVER COMPACTED NATIVE SUBGRADE PER GRADES AND DIMENSIONS SHOWN. REFER TO SHEET C5.3 FOR TYPICAL CROSS-SECTIONS F-F AND E-E AND CONCRETE BASIN DETAIL.

ABBREVIATIONS:

BOR	BOTTOM OF RAMP
BW	BOTTOM OF WALL
CO	CLEAN OUT
EOW	END OF WALL
ES	EXISTING SURFACE
EW	EAST-WEST
FG	FINISHED GRADE
FL	FLOW LINE
FS	FINISHED SURFACE
GB	GRADE BRAKE
HP	HIGH POINT
INV	INVERT
LD	LOCAL DEPRESSION
NS	NORTH-SOUTH
TC	TOP OF CURB
TOB	TOP OF BERM
TOI	TOP OF INLET
TOR	TOP OF RAMP
TW	TOP OF WALL

LEGEND

5245	EXISTING MAJOR CONTOUR
5244	EXISTING MINOR CONTOUR
	EXISTING CHAIN LINK FENCE
OE	EXISTING OVERHEAD ELECTRIC
W	EXISTING WATERLINE
SD	EXISTING STORM SEWER
SS	EXISTING SANITARY SEWER
MH	EXISTING MANHOLE
	EXISTING UTILITY POLE
	EXISTING BOLLARD
	EXISTING LIGHT POLE
	EXISTING FIRE HYDRANT
5245	PROPOSED MAJOR CONTOUR
5244	PROPOSED MINOR CONTOUR
	PROPOSED CHAIN LINK FENCE
SS	PROPOSED SANITARY SEWER
	PROPOSED STORM DRAIN
	PROPOSED MANHOLE
	PROPOSED TURNSTILE
	PROPOSED CONCRETE BARRIER
	PROPOSED BOLLARD
	PROPOSED FIRE HYDRANT
	PROPOSED LIGHT POLE
	PROPOSED TRAILER LOCATION

0 20 30 40

(IN FEET)
1 INCH = 20 FEET

CALL UTILITY NOTIFICATION CENTER OF COLORADO

1-800-922-1987

CALL 2 BUSINESS DAYS IN ADVANCE BEFORE YOU DIG, GRADE, OR EXCAVATE FOR THE MARKING OF UNDERGROUND MEMBER UTILITIES

ENGINEERS NOTE TO CONTRACTOR:

THE EXISTENCE AND LOCATION OF ANY UNDERGROUND UTILITIES, PIPES, AND/OR STRUCTURES SHOWN ON THESE PLANS WERE OBTAINED BY A SEARCH OF AVAILABLE RECORDS. TO THE BEST OF OUR KNOWLEDGE, THERE ARE NO EXISTING UTILITIES EXCEPT AS SHOWN ON THESE PLANS. THE CONTRACTOR SHALL ASCERTAIN THE TRUE VERTICAL AND HORIZONTAL LOCATION OF THOSE UNDERGROUND UTILITIES TO BE USED AND SHALL BE RESPONSIBLE FOR ANY DAMAGE TO ANY PUBLIC OR PRIVATE UTILITIES, SHOWN OR NOT SHOWN HEREON.

BASIS OF BEARINGS:

BEARINGS BASED ON THE NORTH LINE OF LOT 3 AS NORTH 88°03'20" EAST BETWEEN MONUMENTS SHOWN ON THE TOPOGRAPHIC SURVEY.

BENCH MARK

MARTIN/MARTIN ENGINEERING PROJECT BENCHMARK, USGS DISK STAMPED Y259 (LAT 33°46'33", LONG 104°55'49") ELEVATION 5257.26 (NGVD 29 5257.37 RECORD)

CITY AND COUNTY OF DENVER
Development Services
Site Engineering

DS Project NO. PR-2011-065 (2011-0177)

PROJECT NAME: SAFEWAY DISTRIBUTION CENTER

DESIGNED BY	DATE	DATE ISSUED:	DRAWING NO.
DAP	10-24-10	09-28-11	C5.0
DRAWN BY	DATE		
DAP	10-24-10		
CHECKED BY	DATE	SHEET 12 OF 49 SHEETS	
AEH	09-28-11		

PREPARED UNDER THE SUPERVISION OF TAIT & ASSOCIATES, INC.

ALEX HOIME, PE 41703 — DATE 9-28-11

COLORADO LICENSED ALEX HOIME 41703 PROFESSIONAL ENGINEER

NO.	DESCRIPTION	BY	DATE
	REVISIONS		

TAIT & ASSOCIATES, INC.
6163 EAST COUNTY ROAD 16
LOVELAND, CO 80537
(970) 613-1447 TEL
(970) 613-1897 FAX
www.tait.com

TAIT

PRECISE GRADING PLAN

NORTH EMPLOYEE AND VISITOR PARKING AREA
SWC I-70 AND DAHLIA STREET ,DENVER, CO
SAFEWAY INC.

DRAWN: ETN
DATE: 10-24-10
CHECKED: AEH
DATE: 09-26-11
REVISION #: 2
DATE: 07-07-11
JOB NO: CO1176F

C5.0

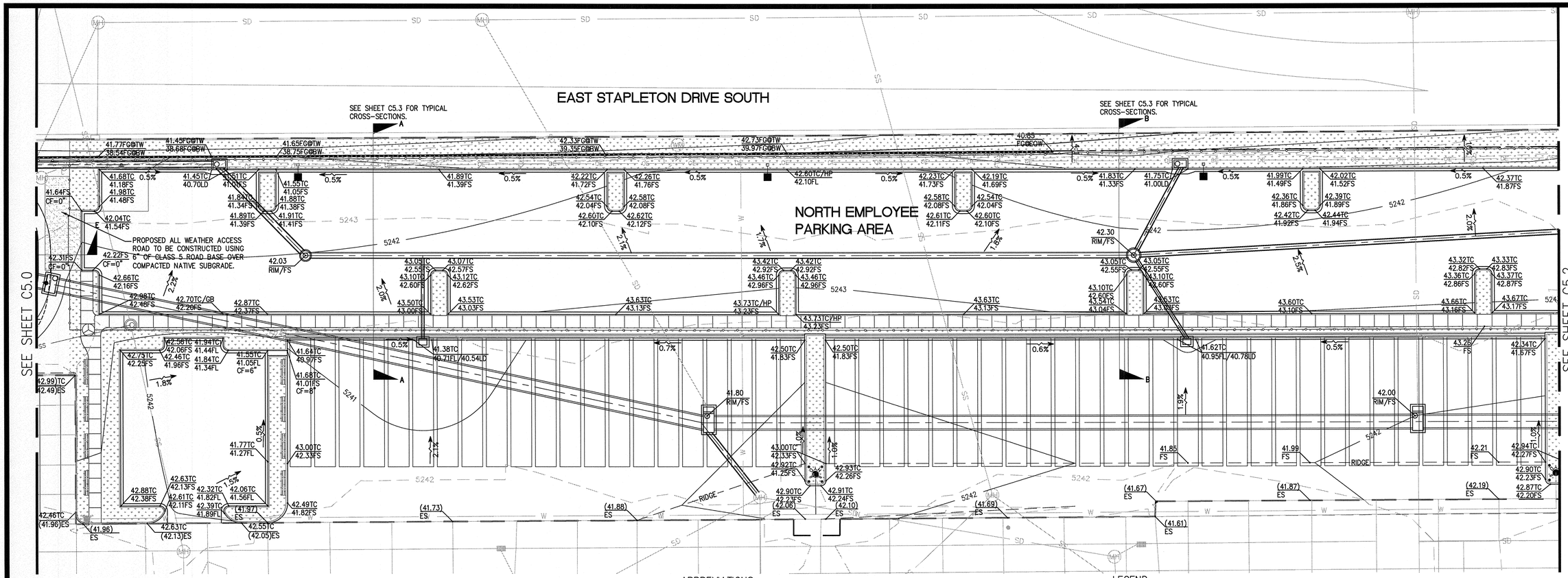

ABBREVIATIONS:

BOR	BOTTOM OF RAMP
BW	BOTTOM OF WALL
CO	CLEAN OUT
EOW	END OF WALL
ES	EXISTING SURFACE
EW	EAST–WEST
FG	FINISHED GRADE
FL	FLOW LINE
FS	FINISHED SURFACE
GB	GRADE BRAKE
HP	HIGH POINT
INV	INVERT
LD	LOCAL DEPRESSION
NS	NORTH–SOUTH
TC	TOP OF CURB
TOB	TOP OF BERM
TOI	TOP OF INLET
TOR	TOP OF RAMP
TW	TOP OF WALL

LEGEND

5245	EXISTING MAJOR CONTOUR
5244	EXISTING MINOR CONTOUR
	EXISTING CHAIN LINK FENCE
OE	EXISTING OVERHEAD ELECTRIC
W	EXISTING WATERLINE
SD	EXISTING STORM SEWER
SS	EXISTING SANITARY SEWER
MH	EXISTING MANHOLE
	EXISTING UTILITY POLE
	EXISTING BOLLARD
	EXISTING LIGHT POLE
	EXISTING FIRE HYDRANT
5245	PROPOSED MAJOR CONTOUR
5244	PROPOSED MINOR CONTOUR
	PROPOSED CHAIN LINK FENCE
SS	PROPOSED SANITARY SEWER
	PROPOSED STORM DRAIN
	PROPOSED MANHOLE
	PROPOSED TURNSTILE
	PROPOSED CONCRETE BARRIER
	PROPOSED BOLLARD
	PROPOSED FIRE HYDRANT
	PROPOSED LIGHT POLE
	PROPOSED TRAILER LOCATION

0 20 30 40
(IN FEET)
1 INCH = 20 FEET

CALL UTILITY NOTIFICATION CENTER OF COLORADO
1–800–922–1987
CALL 2 BUSINESS DAYS IN ADVANCE BEFORE YOU DIG, GRADE, OR EXCAVATE FOR THE MARKING OF UNDERGROUND MEMBER UTILITIES

ENGINEERS NOTE TO CONTRACTOR:

THE EXISTENCE AND LOCATION OF ANY UNDERGROUND UTILITIES, PIPES, AND/OR STRUCTURES SHOWN ON THESE PLANS WERE OBTAINED BY A SEARCH OF AVAILABLE RECORDS. TO THE BEST OF OUR KNOWLEDGE, THERE ARE NO EXISTING UTILITIES EXCEPT AS SHOWN ON THESE PLANS. THE CONTRACTOR SHALL ASCERTAIN THE TRUE VERTICAL AND HORIZONTAL LOCATION OF THOSE UNDERGROUND UTILITIES TO BE USED AND SHALL BE RESPONSIBLE FOR ANY DAMAGE TO ANY PUBLIC OR PRIVATE UTILITIES, SHOWN OR NOT SHOWN HEREON.

BASIS OF BEARINGS:

BEARINGS BASED ON THE NORTH LINE OF LOT 3 AS NORTH 88°03'20" EAST BETWEEN MONUMENTS SHOWN ON THE TOPOGRAPHIC SURVEY.

BENCH MARK

MARTIN/MARTIN ENGINEERING PROJECT BENCHMARK, USGS DISK STAMPED Y259 (LAT 33°46'33", LONG 104°55'49") ELEVATION 5257.26 (NGVD 29 5257.37 RECORD)

CITY AND COUNTY OF DENVER
Development Services
Site Engineering
DS Project NO. PR-2011-065 (2011-0177)
PROJECT NAME: SAFEWAY DISTRIBUTION CENTER

DESIGNED BY	DATE	DATE ISSUED:	DRAWING NO.
DAP	10-24-10	09-28-11	C5.1
DRAWN BY	DATE		
DAP	10-24-10		
CHECKED BY	DATE	SHEET 13 OF 69 SHEETS	
AEH	09-28-11		

PREPARED UNDER THE SUPERVISION OF TAIT & ASSOCIATES, INC.
ALEX HOIME, PE 41703
9-28-11
DATE
COLORADO LICENSED ALEX HOIME 41703 PROFESSIONAL ENGINEER

NO.	DESCRIPTION	BY	DATE
	REVISIONS		

TAIT & ASSOCIATES, INC.
6163 EAST COUNTY ROAD 16
LOVELAND, CO 80537
(970) 613–1447 TEL
(970) 613–1897 FAX
www.tait.com

TAIT

PRECISE GRADING PLAN

NORTH EMPLOYEE AND VISITOR PARKING AREA
SWC I-70 AND DAHLIA STREET ,DENVER, CO
SAFEWAY INC.

DRAWN: ETN
DATE: 10-24-10
CHECKED: AEH
DATE: 09-28-11
BLOCK: 07 & 12
DATE: 07-07-11
JOB NO: CO1178F

C5.1

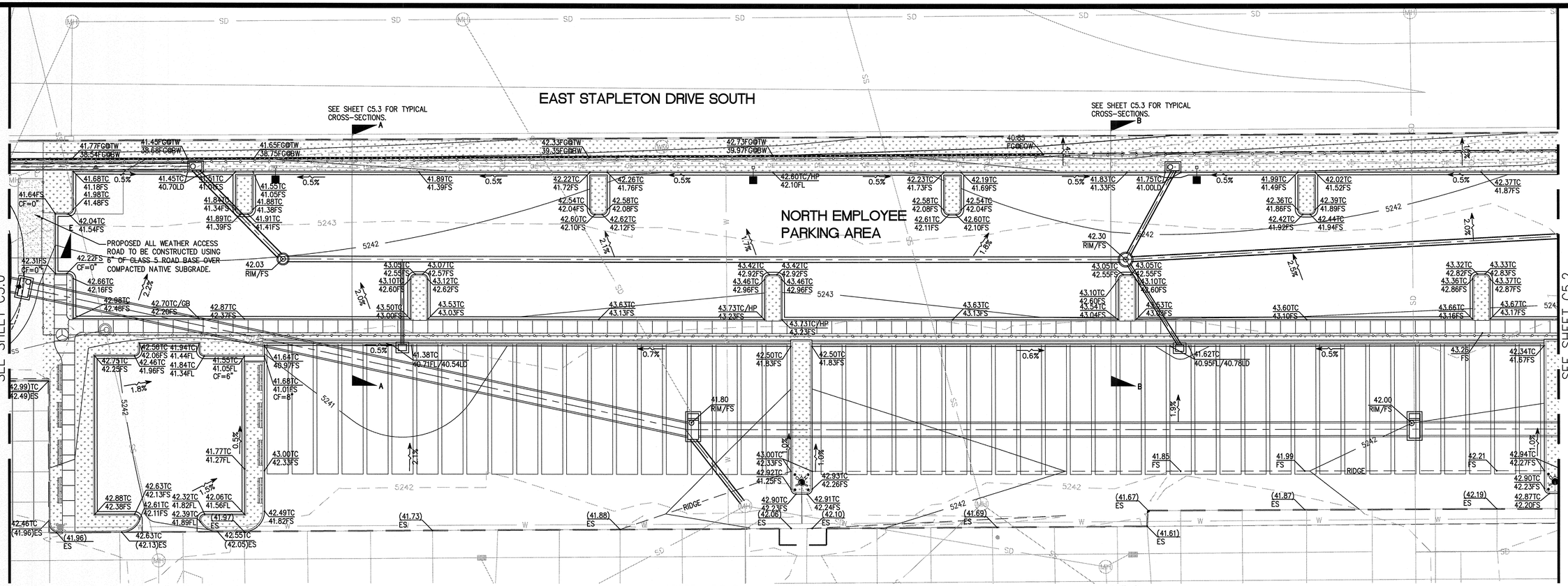

ABBREVIATIONS:

BOR	BOTTOM OF RAMP
BW	BOTTOM OF WALL
CO	CLEAN OUT
EOW	END OF WALL
ES	EXISTING SURFACE
EW	EAST-WEST
FG	FINISHED GRADE
FL	FLOW LINE
FS	FINISHED SURFACE
GB	GRADE BRAKE
HP	HIGH POINT
INV	INVERT
LD	LOCAL DEPRESSION
NS	NORTH-SOUTH
TC	TOP OF CURB
TOB	TOP OF BERM
TOI	TOP OF INLET
TOR	TOP OF RAMP
TW	TOP OF WALL

LEGEND

- 5245 — EXISTING MAJOR CONTOUR
- 5244 — EXISTING MINOR CONTOUR
- EXISTING CHAIN LINK FENCE
- OE — EXISTING OVERHEAD ELECTRIC
- W — EXISTING WATERLINE
- SD — EXISTING STORM SEWER
- SS — EXISTING SANITARY SEWER
- MH — EXISTING MANHOLE
- EXISTING UTILITY POLE
- EXISTING BOLLARD
- EXISTING LIGHT POLE
- EXISTING FIRE HYDRANT
- 5245 — PROPOSED MAJOR CONTOUR
- 5244 — PROPOSED MINOR CONTOUR
- PROPOSED CHAIN LINK FENCE
- SS — PROPOSED SANITARY SEWER
- PROPOSED STORM DRAIN
- PROPOSED MANHOLE
- PROPOSED TURNSTILE
- PROPOSED CONCRETE BARRIER
- PROPOSED BOLLARD
- PROPOSED FIRE HYDRANT
- PROPOSED LIGHT POLE
- PROPOSED TRAILER LOCATION

0 20 30 40
(IN FEET)
1 INCH = 20 FEET

CALL UTILITY NOTIFICATION CENTER OF COLORADO

1-800-922-1987

CALL 2 BUSINESS DAYS IN ADVANCE BEFORE YOU DIG, GRADE, OR EXCAVATE FOR THE MARKING OF UNDERGROUND MEMBER UTILITIES

ENGINEERS NOTE TO CONTRACTOR:

THE EXISTENCE AND LOCATION OF ANY UNDERGROUND UTILITIES, PIPES, AND/OR STRUCTURES SHOWN ON THESE PLANS WERE OBTAINED BY A SEARCH OF AVAILABLE RECORDS. TO THE BEST OF OUR KNOWLEDGE, THERE ARE NO EXISTING UTILITIES EXCEPT AS SHOWN ON THESE PLANS. THE CONTRACTOR SHALL ASCERTAIN THE TRUE VERTICAL AND HORIZONTAL LOCATION OF THOSE UNDERGROUND UTILITIES TO BE USED AND SHALL BE RESPONSIBLE FOR ANY DAMAGE TO ANY PUBLIC OR PRIVATE UTILITIES, SHOWN OR NOT SHOWN HEREON.

BASIS OF BEARINGS:

BEARINGS BASED ON THE NORTH LINE OF LOT 3 AS NORTH 88°03'20" EAST BETWEEN MONUMENTS SHOWN ON THE TOPOGRAPHIC SURVEY.

BENCH MARK

MARTIN/MARTIN ENGINEERING PROJECT BENCHMARK, USGS DISK STAMPED Y259 (LAT 33°46'33", LONG 104°55'49") ELEVATION 5257.26 (NGVD 29 5257.37 RECORD)

CITY AND COUNTY OF DENVER
Development Services
Site Engineering

DS Project NO. PR-2011-065 (2011-0177)

PROJECT NAME: SAFEWAY DISTRIBUTION CENTER

DESIGNED BY	DATE	DATE ISSUED:	DRAWING NO.
DAP	10-24-10	09-28-11	C5.1
DRAWN BY	DATE		
DAP	10-24-10		
CHECKED BY	DATE	SHEET 13 OF 49 SHEETS	
AEH	09-26-11		

PREPARED UNDER THE SUPERVISION OF TAIT & ASSOCIATES, INC.

ALEX HOIME, PE 41703

9-28-11
DATE

COLORADO LICENSED ALEX HOIME 41703 PROFESSIONAL ENGINEER

NO.	DESCRIPTION	BY	DATE
	REVISIONS		

TAIT & ASSOCIATES, INC.
6163 EAST COUNTY ROAD 16
LOVELAND, CO 80537
(970) 613-1447 TEL
(970) 613-1897 FAX
www.tait.com

TAIT

PRECISE GRADING PLAN

NORTH EMPLOYEE AND VISITOR PARKING AREA
SWC I-70 AND DAHLIA STREET ,DENVER, CO
SAFEWAY INC.

DRAWN: ETN
DATE: 10-24-10
CHECKED: AEH
DATE: 09-26-11
REVISION #: 2
DATE: 07-07-11
JOB NO: CO1176F

C5.1

CITY OF DENVER APPROVAL SET - 09/28/11

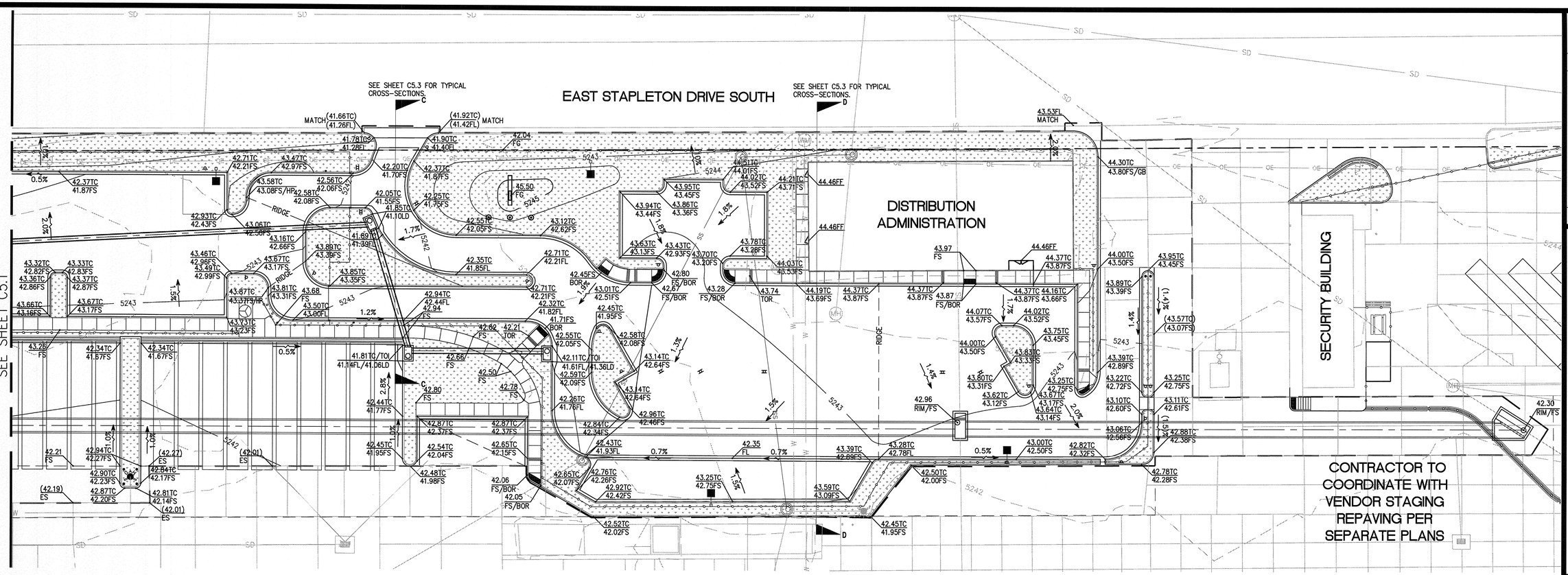

ABBREVIATIONS:

BOR	BOTTOM OF RAMP
BW	BOTTOM OF WALL
CO	CLEAN OUT
EOW	END OF WALL
ES	EXISTING SURFACE
EW	EAST–WEST
FG	FINISHED GRADE
FL	FLOW LINE
FS	FINISHED SURFACE
GB	GRADE BRAKE
HP	HIGH POINT
INV	INVERT
LD	LOCAL DEPRESSION
NS	NORTH–SOUTH
TC	TOP OF CURB
TOB	TOP OF BERM
TOI	TOP OF INLET
TOR	TOP OF RAMP
TW	TOP OF WALL

LEGEND

5245	EXISTING MAJOR CONTOUR
5244	EXISTING MINOR CONTOUR
	EXISTING CHAIN LINK FENCE
OE	EXISTING OVERHEAD ELECTRIC
W	EXISTING WATERLINE
SD	EXISTING STORM SEWER
SS	EXISTING SANITARY SEWER
	EXISTING MANHOLE
	EXISTING UTILITY POLE
	EXISTING BOLLARD
	EXISTING LIGHT POLE
	EXISTING FIRE HYDRANT
5245	PROPOSED MAJOR CONTOUR
5244	PROPOSED MINOR CONTOUR
	PROPOSED CHAIN LINK FENCE
SS	PROPOSED SANITARY SEWER
	PROPOSED STORM DRAIN
	PROPOSED MANHOLE
	PROPOSED TURNSTILE
	PROPOSED CONCRETE BARRIER
	PROPOSED BOLLARD
	PROPOSED FIRE HYDRANT
	PROPOSED LIGHT POLE
	PROPOSED TRAILER LOCATION

0 20 30 40
(IN FEET)
1 INCH = 20 FEET

CALL UTILITY NOTIFICATION CENTER OF COLORADO

1–800–922–1987

CALL 2 BUSINESS DAYS IN ADVANCE BEFORE YOU DIG, GRADE, OR EXCAVATE FOR THE MARKING OF UNDERGROUND MEMBER UTILITIES

ENGINEERS NOTE TO CONTRACTOR:

THE EXISTENCE AND LOCATION OF ANY UNDERGROUND UTILITIES, PIPES, AND/OR STRUCTURES SHOWN ON THESE PLANS WERE OBTAINED BY A SEARCH OF AVAILABLE RECORDS. TO THE BEST OF OUR KNOWLEDGE, THERE ARE NO EXISTING UTILITIES EXCEPT AS SHOWN ON THESE PLANS. THE CONTRACTOR SHALL ASCERTAIN THE TRUE VERTICAL AND HORIZONTAL LOCATION OF THOSE UNDERGROUND UTILITIES TO BE USED AND SHALL BE RESPONSIBLE FOR ANY DAMAGE TO ANY PUBLIC OR PRIVATE UTILITIES, SHOWN OR NOT SHOWN HEREON.

BASIS OF BEARINGS:

BEARINGS BASED ON THE NORTH LINE OF LOT 3 AS NORTH 88°03'20" EAST BETWEEN MONUMENTS SHOWN ON THE TOPOGRAPHIC SURVEY.

BENCH MARK

MARTIN/MARTIN ENGINEERING PROJECT BENCHMARK, USGS DISK STAMPED Y259 (LAT 33°46'33", LONG 104°55'49") ELEVATION 5257.26 (NGVD 29 5257.37 RECORD)

CITY AND COUNTY OF DENVER
Development Services
Site Engineering

DS Project NO. PR-2011-065 (2011-0177)

PROJECT NAME: SAFEWAY DISTRIBUTION CENTER

DESIGNED BY DAP	DATE 10-24-10	DATE ISSUED: 09-28-11	DRAWING NO.
DRAWN BY DAP	DATE 10-24-10	SHEET 14 OF 49 SHEETS	C5.2
CHECKED BY AEH	DATE 09-28-11		

PREPARED UNDER THE SUPERVISION OF TAIT & ASSOCIATES, INC.

ALEX HOIME, PE 41703 — DATE 9-28-11

COLORADO LICENSED ALEX HOIME 41703 PROFESSIONAL ENGINEER

NO.	DESCRIPTION	BY	DATE
	REVISIONS		

TAIT & ASSOCIATES, INC.
6163 EAST COUNTY ROAD 16
LOVELAND, CO 80537
(970) 613-1447 TEL
(970) 613-1897 FAX
www.tait.com

TAIT

PRECISE GRADING PLAN

NORTH EMPLOYEE AND VISITOR PARKING AREA
SWC I-70 AND DAHLIA STREET ,DENVER, CO
SAFEWAY INC.

DRAWN: ETN
DATE: 10-24-10
CHECKED: AEH
DATE: 09-26-11
REVISION #: 2
DATE: 07-07-11
JOB NO: CO1176F

C5.2

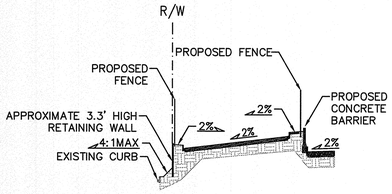

SECTION A-A
NTS

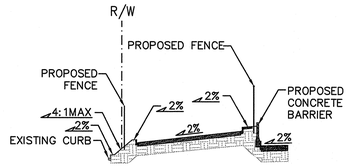

SECTION B-B
NTS

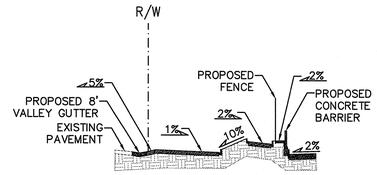

SECTION C-C
NTS

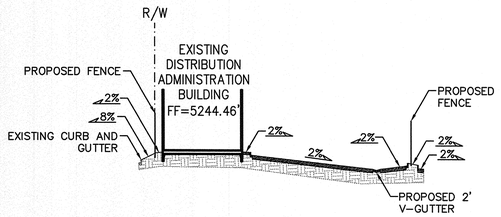

SECTION D-D
NTS

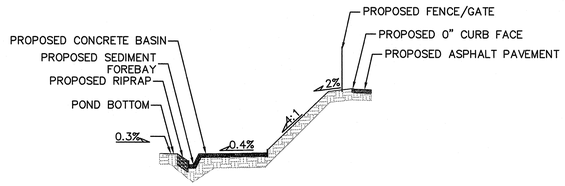

SECTION E-E
NTS

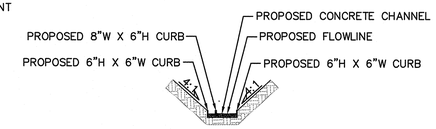

SECTION F-F
NTS

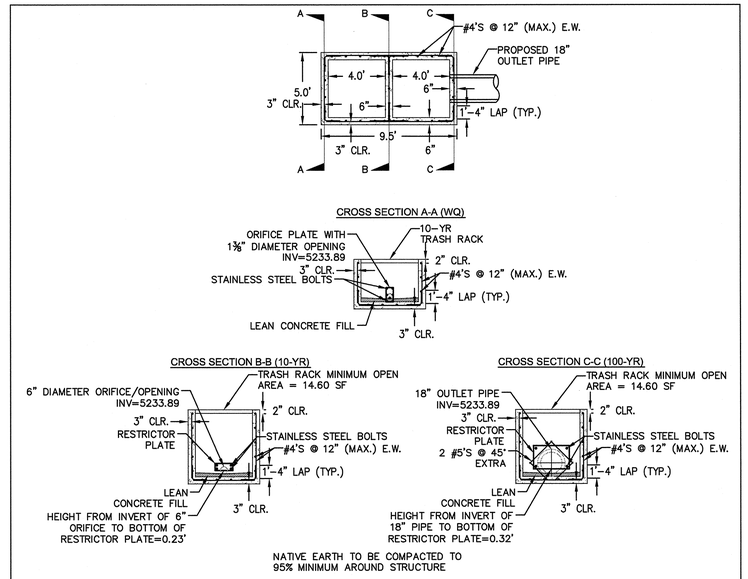

OUTLET STRUCTURE DETAIL
NTS

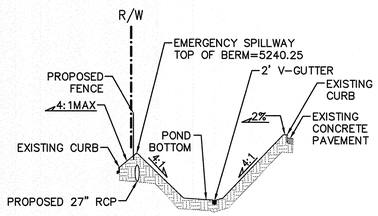

SECTION G-G
NTS

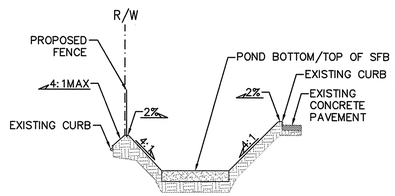

SECTION H-H
NTS

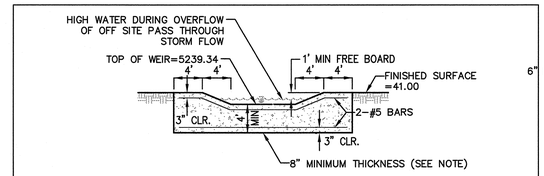

NOTE: TRENCH FOR WEIR OUTLET STRUCTURE USING NATIVE GROUND AS FORM WORK. CONSTRUCT WEIR 8" MINIMUM THICKNESS UPON COMPLETION OF TRENCHING, PLACE TEMPERATURE STEEL AND CONCRETE IMMEDIATELY, FORM TOP 4".

SECTION A-A

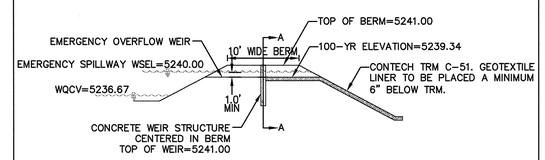

EMERGENCY OVERFLOW AND SPILLWAY DETAIL
NTS

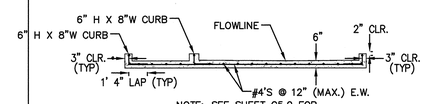

NOTE: SEE SHEET C5.0 FOR GRADES AND DIMENSIONS.

CONCRETE BASIN DETAIL
NTS

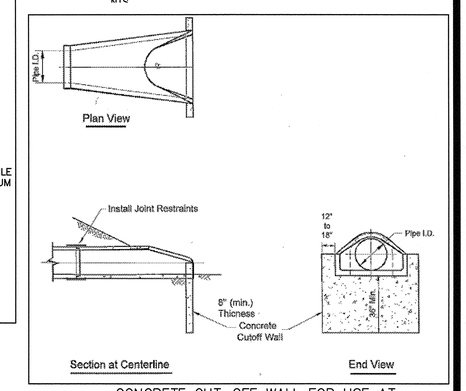

CONCRETE CUT-OFF WALL FOR USE AT DETENTION BASIN OUTLET PIPES
N.T.S

NOTE: SEE SHEETS C5.0–C5.2 FOR LOCATION OF CROSS SECTIONS.

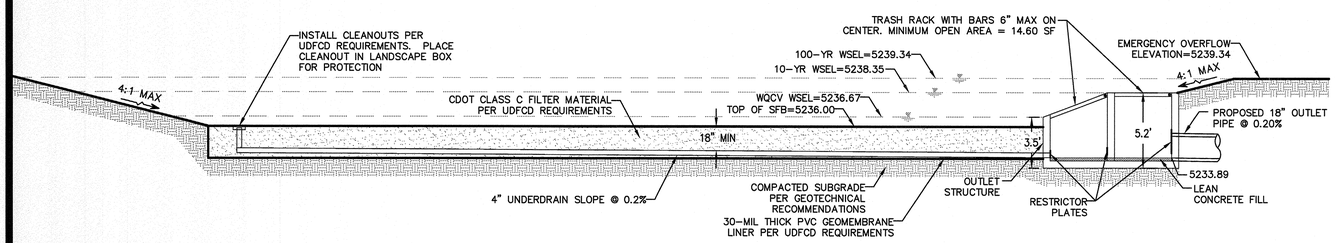

SAND FILTER BASIN DETAIL
NTS

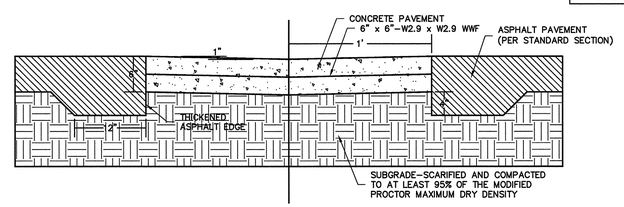

2' CONCRETE VALLEY GUTTER
N.T.S

CALL UTILITY NOTIFICATION CENTER OF COLORADO

1-800-922-1987

CALL 2 BUSINESS DAYS IN ADVANCE BEFORE YOU DIG, GRADE, OR EXCAVATE FOR THE MARKING OF UNDERGROUND MEMBER UTILITIES

ENGINEERS NOTE TO CONTRACTOR:

THE EXISTENCE AND LOCATION OF ANY UNDERGROUND UTILITIES, PIPES, AND/OR STRUCTURES SHOWN ON THESE PLANS WERE OBTAINED BY A SEARCH OF AVAILABLE RECORDS. TO THE BEST OF OUR KNOWLEDGE, THERE ARE NO EXISTING UTILITIES EXCEPT AS SHOWN ON THESE PLANS. THE CONTRACTOR SHALL ASCERTAIN THE TRUE VERTICAL AND HORIZONTAL LOCATION OF THOSE UNDERGROUND UTILITIES TO BE USED AND SHALL BE RESPONSIBLE FOR ANY DAMAGE TO ANY PUBLIC OR PRIVATE UTILITIES, SHOWN OR NOT SHOWN HEREON.

BASIS OF BEARINGS:

BEARINGS BASED ON THE NORTH LINE OF LOT 3 AS NORTH 88°03'20" EAST BETWEEN MONUMENTS SHOWN ON THE TOPOGRAPHIC SURVEY.

BENCH MARK

MARTIN/MARTIN ENGINEERING PROJECT BENCHMARK, USGS DISK STAMPED Y259 (LAT 33°46'33", LONG 104°55'49") ELEVATION 5257.26 (NGVD 29 5257.37 RECORD)

NO.	DESCRIPTION	REVISIONS	BY	DATE

TAIT & ASSOCIATES, INC.
6163 EAST COUNTY ROAD 16
LOVELAND, CO 80537
(970) 613-1447 TEL
(970) 613-1897 FAX
www.tait.com

TAIT

PRECISE GRADING PLAN TYPICAL CROSS-SECTIONS

NORTH EMPLOYEE AND VISITOR PARKING AREA
SWC I-70 AND DAHLIA STREET ,DENVER, CO
SAFEWAY INC.

CITY AND COUNTY OF DENVER
Development Services
Site Engineering

DS Project NO. PR-2011-065 (2011-0177)

PROJECT NAME: SAFEWAY DISTRIBUTION CENTER

DESIGNED BY DAP	DATE 10-24-10	DATE ISSUED: 09-28-11	DRAWING NO.
DRAWN BY DAP	DATE 10-24-10		C5.3
CHECKED BY AEH	DATE 09-26-11	SHEET 15 OF 49 SHEETS	

PREPARED UNDER THE SUPERVISION OF TAIT & ASSOCIATES, INC.

ALEX HOIME, PE 41703 — DATE 9-28-11

COLORADO LICENSED ALEX HOIME 41703 PROFESSIONAL ENGINEER

DRAWN: DAP
DATE: 10-24-10
CHECKED: AEH
DATE: 09-26-11
REVISION #: 2
DATE: 07-07-11
JOB NO: CO1176F

C5.3

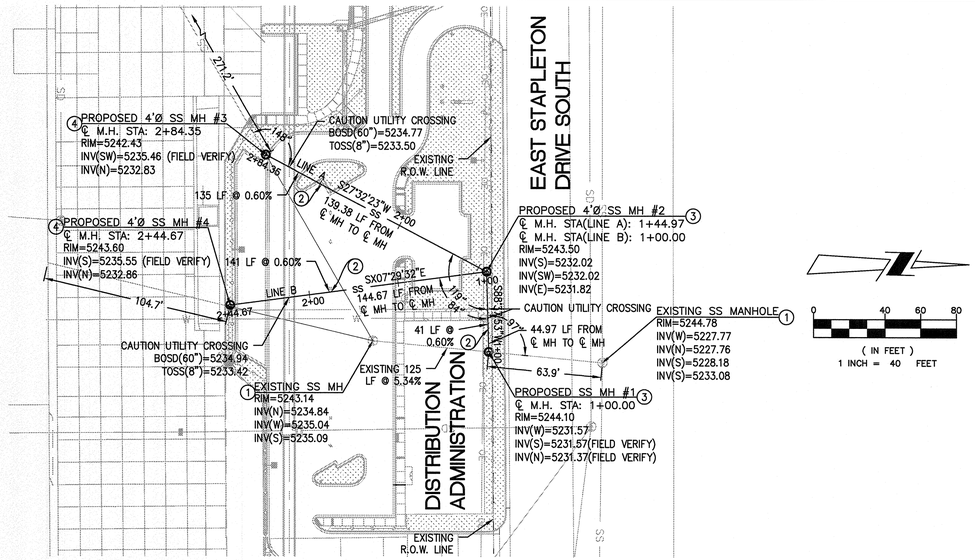

LEGEND

- EXISTING CHAIN LINK FENCE
- EXISTING SANITARY SEWER
- EXISTING WATERLINE
- EXISTING STORM SEWER
- EXISTING OVERHEAD ELECTRIC
- EXISTING STORM MANHOLE
- EXISTING UTILITY POLE
- EXISTING BOLLARD
- EXISTING LIGHT POLE
- EXISTING FIRE HYDRANT
- PROPOSED CHAIN LINK FENCE
- PROPOSED SANITARY SEWER
- PROPOSED STORM DRAIN
- PROPOSED MANHOLE
- PROPOSED TURNSTILE
- PROPOSED CONCRETE BARRIER
- PROPOSED BOLLARD
- PROPOSED FIRE HYDRANT
- PROPOSED LIGHT POLE

ABBREVIATIONS:

BOSD	BOTTOM OF STORM DRAIN
BOW	BOTTOM OF WATER
CFS	CUBIC FEET PER SECOND
FPS	FEET PER SECOND
GPD	GALLONS PER DAY
HORIZ	HORIZONTAL (SCALE)
INV	INVERT
LF	LINEAR FEET
MH	MANHOLE
RCP	REINFORCED CONCRETE PIPE
SD	STORM DRAIN
SF	SQUARE FEET
SS	SEWER (SANITARY)
STA:	STATION
TOSD	TOP OF STORM DRAIN
TOSS	TOP OF SANITARY SEWER
VERT	VERTICAL (SCALE)
W	WATER

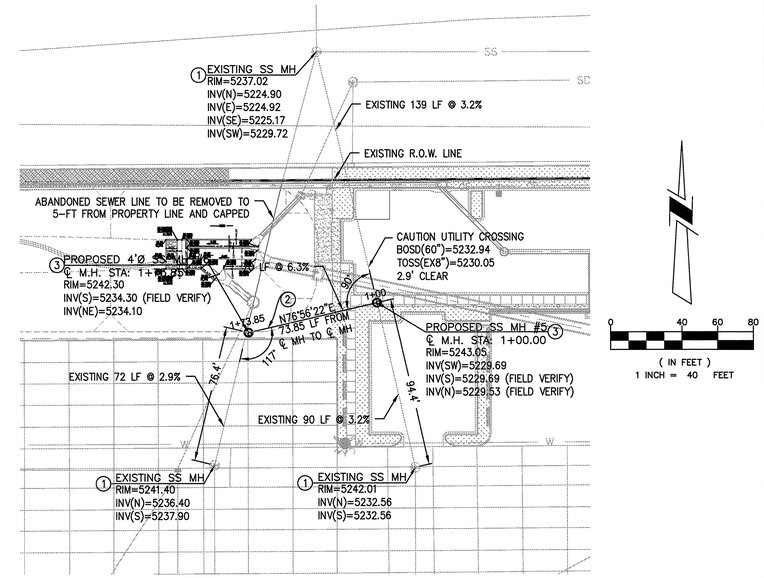

CONSTRUCTION NOTES:

1. PROTECT EXISTING IMPROVEMENTS IN PLACE.
2. INSTALL 8" PVC SANITARY SEWER AND TRENCHING PER CITY OF DENVER STANDARD DETAILS S-301.1 AND S-301.2.
3. INSTALL 4' I.D. MANHOLES PER CITY OF DENVER STANDARD S-501.1.
4. INSTALL OUTSIDE DROP MANHOLE PER CITY OF DENVER STANDARD S-530.

NOTE: CONTRACTOR TO VERIFY ELEVATIONS AND LOCATION OF EXISTING UTILITIES AND NOTIFY ENGINEER OF ANY DISCREPANCIES FROM THAT SHOWN ON PLANS PRIOR TO PROCEEDING WITH WORK.

PROFILE SCALE
HORIZ. 1"=40'
VERT. 1"=4'

PLAN SCALE
1"=40'

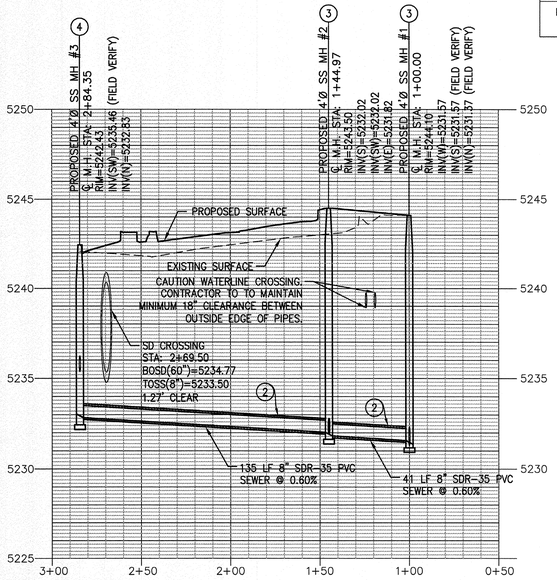

SANITARY SEWER PLAN & PROFILE – LINE A

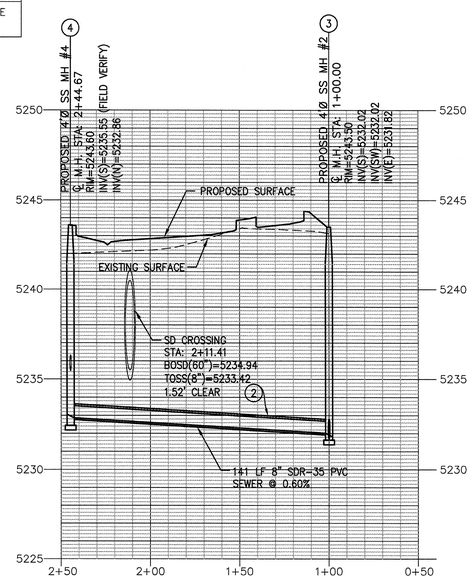

SANITARY SEWER PLAN & PROFILE – LINE B

LINE A AND B FLOW CALCULATIONS

WEST SEWER FLOW CALCULATION:
CONTRIBUTING AREA = 182,000SF
TYPE OF USE = WAREHOUSE
FLOWRATE = 100GPD / 1000SF
AVERAGE FLOW = 18,200 GPD
= 0.029 CFS
PEAK FLOW = 0.12 CFS
PERCENT FULL @ 0.6% = 24%
VELOCITY = 1.8FPS

EAST SEWER FLOW CALCULATION:
CONTRIBUTING AREA = 157,000SF
TYPE OF USE = WAREHOUSE
FLOWRATE = 100GPD / 1000SF
AVERAGE FLOW = 15,700 GPD
= 0.024 CFS
PEAK FLOW = 0.096 CFS
PERCENT FULL @ 0.6% = 22%
VELOCITY = 1.7FPS

EAST AND WEST SEWER FLOW CALCULATION:
CONTRIBUTING AREA = 339,000SF
TYPE OF USE = WAREHOUSE
FLOWRATE = 100GPD / 1000SF
AVERAGE FLOW = 33,900 GPD
= 0.053 CFS
PEAK FLOW = 0.22 CFS
PERCENT FULL @ 0.6% = 33%
VELOCITY = 2.2 FPS

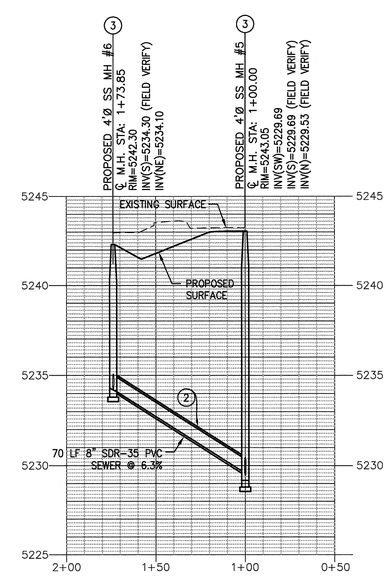

SANITARY SEWER PLAN & PROFILE – LINE C

PROFILE SCALE
HORIZ. 1"=40'
VERT. 1"=4'

PLAN SCALE
1"=40'

LINE C FLOW CALCULATIONS

WEST SEWER FLOW CALCULATION:
CONTRIBUTING AREA = 508,000SF
TYPE OF USE = WAREHOUSE
FLOWRATE = 100GPD / 1000SF
AVERAGE FLOW = 50,800 GPD
= 0.079 CFS
PEAK FLOW = 0.32 CFS
PERCENT FULL @ 6.3% = 22%
VELOCITY = 5.6 FPS

EAST AND WEST SEWER FLOW CALCULATION:
CONTRIBUTING AREA = 673,000SF
TYPE OF USE = WAREHOUSE
FLOWRATE = 100GPD / 1000SF
AVERAGE FLOW = 67,300 GPD
= 0.104 CFS
PEAK FLOW = 0.39 CFS
PERCENT FULL @ 3.2% = 29%
VELOCITY = 4.7 FPS

CALL UTILITY NOTIFICATION CENTER OF COLORADO

1-800-922-1987

CALL 2 BUSINESS DAYS IN ADVANCE BEFORE YOU DIG, GRADE, OR EXCAVATE FOR THE MARKING OF UNDERGROUND MEMBER UTILITIES

ENGINEERS NOTE TO CONTRACTOR:

THE EXISTENCE AND LOCATION OF ANY UNDERGROUND UTILITIES, PIPES, AND/OR STRUCTURES SHOWN ON THESE PLANS WERE OBTAINED BY A SEARCH OF AVAILABLE RECORDS. TO THE BEST OF OUR KNOWLEDGE, THERE ARE NO EXISTING UTILITIES EXCEPT AS SHOWN ON THESE PLANS. THE CONTRACTOR SHALL ASCERTAIN THE TRUE VERTICAL AND HORIZONTAL LOCATION OF THOSE UNDERGROUND UTILITIES TO BE USED AND SHALL BE RESPONSIBLE FOR ANY DAMAGE TO ANY PUBLIC OR PRIVATE UTILITIES, SHOWN OR NOT SHOWN HEREON.

BASIS OF BEARINGS:

BEARINGS BASED ON THE NORTH LINE OF LOT 3 AS NORTH 88°03'20" EAST BETWEEN MONUMENTS SHOWN ON THE TOPOGRAPHIC SURVEY.

BENCH MARK

MARTIN/MARTIN ENGINEERING PROJECT BENCHMARK, USGS DISK STAMPED Y259 (LAT 33°46'33", LONG 104°55'49") ELEVATION 5257.26 (NGVD 29 5257.37 RECORD)

CITY AND COUNTY OF DENVER
Development Services
Site Engineering

DS Project NO. PR-2011-065 (2011-0177)

PROJECT NAME: SAFEWAY DISTRIBUTION CENTER

DESIGNED BY	DATE	DATE ISSUED:	DRAWING NO.
DAP	10-24-10	09-28-11	C6.0
DRAWN BY DAP	DATE 10-24-10		
CHECKED BY ABH	DATE 09-26-11	SHEET 18 OF 49 SHEETS	

PREPARED UNDER THE SUPERVISION OF TAIT & ASSOCIATES, INC.

ALEX HOIME, PE 41703 — DATE 9-28-11

COLORADO LICENSED ALEX HOIME 41703 PROFESSIONAL ENGINEER

NO.	DESCRIPTION	REVISIONS	BY	DATE

TAIT & ASSOCIATES, INC.
6163 EAST COUNTY ROAD 16
LOVELAND, CO 80537
(970) 613-1447 TEL
(970) 613-1897 FAX
www.tait.com

TAIT

SANITARY SEWER PLAN AND PROFILE
NORTH EMPLOYEE AND VISITOR PARKING AREA
SWC I-70 AND DAHLIA STREET ,DENVER, CO
SAFEWAY INC.

DRAWN: DAP
DATE: 10-24-10
CHECKED: ABH
DATE: 09-26-11
REVISION #: 1
DATE: 07-07-11
JOB NO. CO1176F

C6.0

CITY OF DENVER APPROVAL SET - 09/28/11

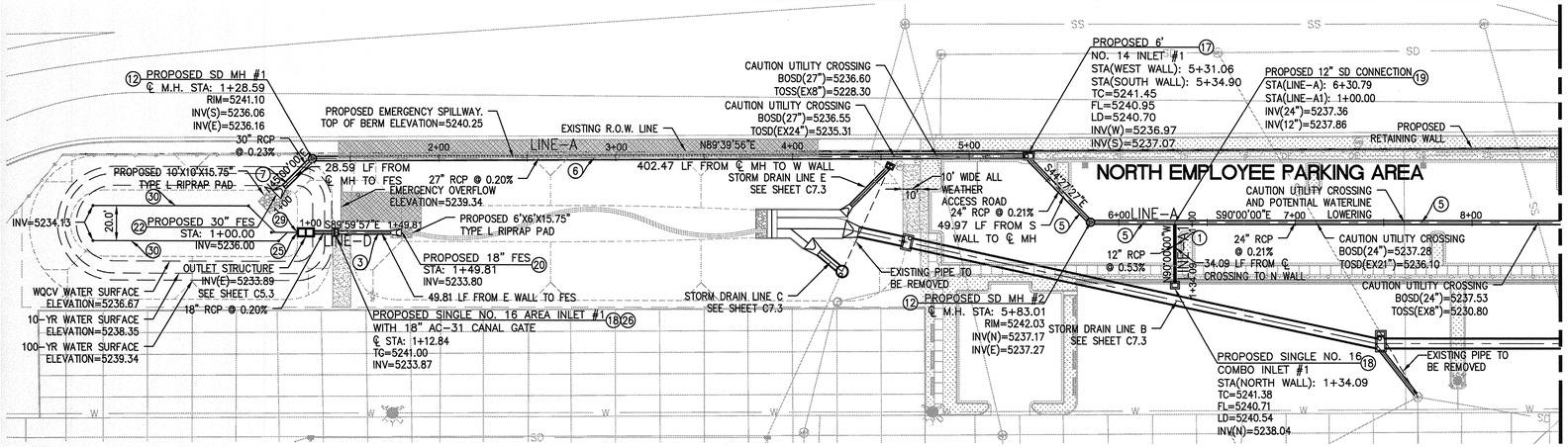

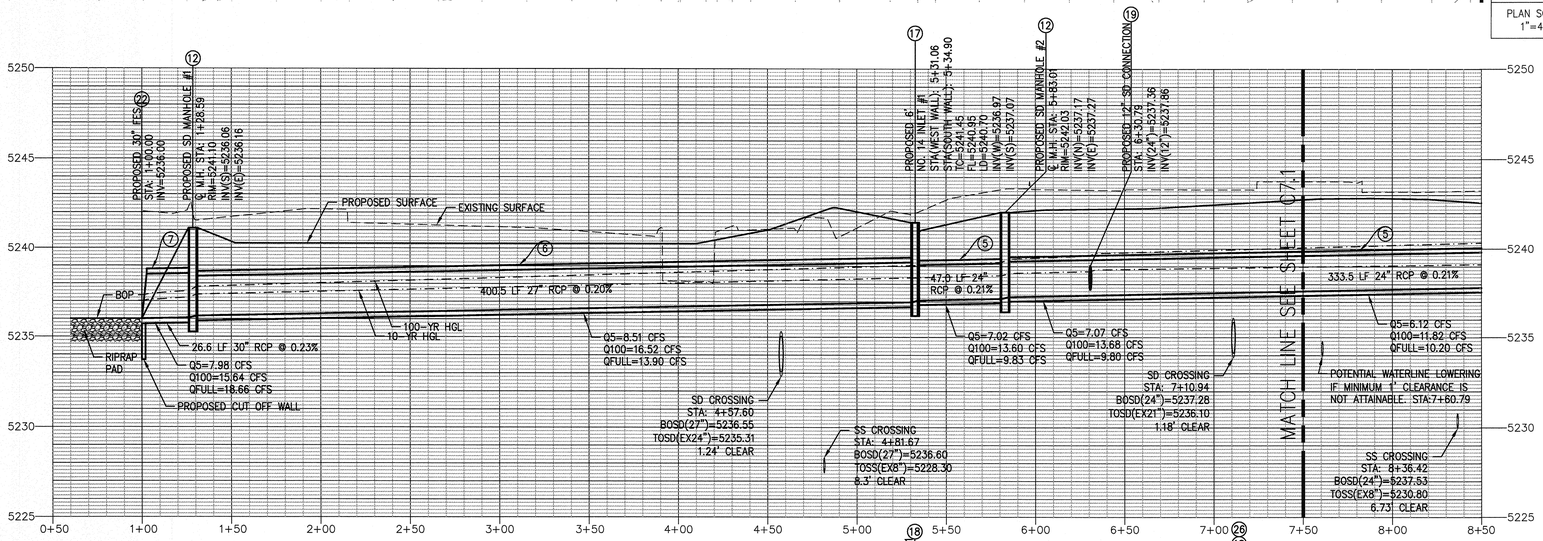

STORM PLAN & PROFILE–LINE A

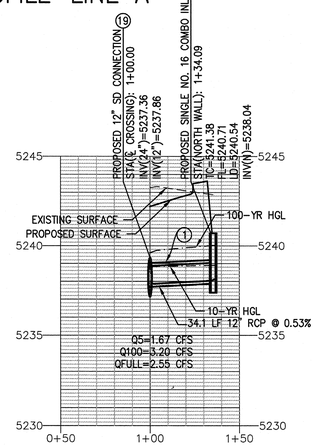

STORM PROFILE–LINE A1

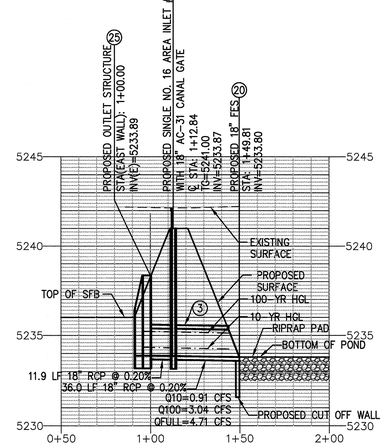

STORM PROFILE–LINE D

PROFILE SCALE
HORIZ. 1"=40'
VERT. 1"=4'

PLAN SCALE
1"=40'

(IN FEET)
1 INCH = 40 FEET

CONSTRUCTION NOTES:

1. INSTALL 12" RCP STORM DRAIN. TRENCHING PER CITY OF DENVER STANDARD S-301.1 AND S-301.2
2. INSTALL 15" RCP STORM DRAIN. TRENCHING PER CITY OF DENVER STANDARD S-301.1 AND S-301.2
3. INSTALL 18" RCP STORM DRAIN. TRENCHING PER CITY OF DENVER STANDARD S-301.1 AND S-301.2
4. INSTALL 21" RCP STORM DRAIN. TRENCHING PER CITY OF DENVER STANDARD S-301.1 AND S-301.2
5. INSTALL 24" RCP STORM DRAIN. TRENCHING PER CITY OF DENVER STANDARD S-301.1 AND S-301.2
6. INSTALL 27" RCP STORM DRAIN. TRENCHING PER CITY OF DENVER STANDARD S-301.1 AND S-301.2
7. INSTALL 30" RCP STORM DRAIN. TRENCHING PER CITY OF DENVER STANDARD S-301.1 AND S-301.2
8. INSTALL 42" RCP STORM DRAIN. TRENCHING PER CITY OF DENVER STANDARD S-301.1 AND S-301.2
9. INSTALL 60" RCP STORM DRAIN. TRENCHING PER CITY OF DENVER STANDARD S-301.1 AND S-301.2
10. INSTALL 14"X23" ELLIPTICAL RCP STORM DRAIN. TRENCHING PER CITY OF DENVER STANDARD S-301.1 AND S-301.2
11. INSTALL 43"X68" ELLIPTICAL RCP STORM DRAIN. TRENCHING PER CITY OF DENVER STANDARD S-301.1 AND S-301.2
12. INSTALL 4' I.D. MANHOLES PER CITY OF DENVER STANDARD S-501.1
13. INSTALL 5' I.D. MANHOLES PER CITY OF DENVER STANDARD S-501.1
14. INSTALL 6' I.D. MANHOLES PER CITY OF DENVER STANDARD S-501.1
15. INSTALL TYPE B MANHOLES PER CITY OF DENVER STANDARD S-503
16. INSTALL TYPE B OR TYPE P MANHOLE MODIFIED TO INCLUDE WEIR STRUCTURE PER DETAILS ON SHEET C7.4.
17. INSTALL NO. 14 INLETS PER CITY AND COUNTY OF DENVER STANDARD S-620.1 AND S-620.2.
18. INSTALL SINGLE NO. 16 COMBO OR AREA INLET PER CITY OF DENVER STANDARD S-616.1 AND S-616V. TYPE PER PLAN.
19. INSTALL 12" STORM DRAIN INLET CONNECTION PER CITY OF DENVER STANDARD S-450
20. INSTALL 18" FLARED END SECTION WITH MECHANICAL CONNECTORS AND CUT OFF WALLS PER DETAIL ON SHEET C5.3
21. INSTALL 24" FLARED END SECTION WITH MECHANICAL CONNECTORS AND CUT OFF WALLS PER DETAIL ON SHEET C5.3
22. INSTALL 30" FLARED END SECTION WITH MECHANICAL CONNECTORS AND CUT OFF WALLS PER DETAIL ON SHEET C5.3
23. INSTALL 42" FLARED END SECTION WITH MECHANICAL CONNECTORS AND CUT OFF WALLS PER DETAIL ON SHEET C5.3
24. INSTALL 60" FLARED END SECTION WITH MECHANICAL CONNECTORS AND CUT OFF WALLS PER DETAIL ON SHEET C5.3
25. INSTALL OUTLET STRUCTURE PER DETAIL ON SHEET C5.3.
26. INSTALL CONTAINMENT GATE PER MANUFACTURE RECOMMENDATIONS. WATERMAN MODEL AC-31 ALUMINUM CANAL GATE OR APPROVED EQUAL. SIZE PER PLAN.
27. INSTALL EMERGENCY OVERFLOW PER DETAIL ON SHEET C5.3.
28. INSTALL CONCRETE ENCASEMENT PER CITY AND COUNTY OF DENVER STANDARD S-350.
29. INSTALL OUTLET STRUCTURE WARNING SIGN PER UDFCD STANDARDS.
30. INSTALL 4" SLOTTED UNDERDRAIN SYSTEM SLOPED @ 0.20% WITH CLEANOUTS AS SHOWN ON PLANS PER UDFCD REQUIREMENTS.

NOTE: CONTRACTOR TO VERIFY ELEVATIONS OF EXISTING UTILITIES AND NOTIFY ENGINEER OF ANY DISCREPANCIES FROM THE ELEVATIONS SHOWN ON PLANS PRIOR TO PROCEEDING WITH WORK.

ABBREVIATIONS:

BOP	BOTTOM OF POND
BOSD	BOTTOM OF STORM DRAIN
CFS	CUBIC FEET PER SECOND
EX	EXISTING
FES	FLARED END SECTION
HGL	HYDRAULIC GRADE LINE
HORIZ	HORIZONTAL (SCALE)
INV	INVERT
LD	LOCAL DEPRESSION
LF	LINEAR FEET
MH	MANHOLE
RCP	REINFORCED CONCRETE PIPE
SD	STORM DRAIN
SS	SEWER (SANITARY)
STA	STATION
TC	TOP OF CURB
TOSD	TOP OF STORM DRAIN
TOSS	TOP OF SANITARY SEWER
Q	FLOW RATE
VERT	VERTICAL (SCALE)
W	WATER
YR	YEAR

LEGEND

- EXISTING CHAIN LINK FENCE
- EXISTING SANITARY SEWER
- EXISTING WATERLINE
- EXISTING STORM SEWER
- EXISTING OVERHEAD ELECTRIC
- EXISTING STORM MANHOLE
- EXISTING UTILITY POLE
- EXISTING BOLLARD
- EXISTING LIGHT POLE
- EXISTING FIRE HYDRANT
- PROPOSED CHAIN LINK FENCE
- PROPOSED SANITARY SEWER
- PROPOSED STORM DRAIN
- PROPOSED MANHOLE
- PROPOSED TURNSTILE
- PROPOSED CONCRETE BARRIER
- PROPOSED BOLLARD
- PROPOSED FIRE HYDRANT
- PROPOSED LIGHT POLE

DETENTION BASIN SUMMARY TABLE

	WATER SURFACE ELEVATION (FEET)	VOLUME (ACRE-FT)	RELEASE RATE (CFS)
WATER QUALITY CAPTURE VOLUME	5236.67	0.08	---
10-YR + WATER QUALITY CAPTURE VOLUME	5238.35	0.34	0.91
100-YR + 1/2 WATER QUALITY CAPTURE VOLUME	5239.34	0.54	3.04

NOTE: SITE IS LOCATED IN A ZONE X FLOODPLAIN

RIPRAP SIZING CHART

DIAMETER (IN)	RIPRAP TYPE	LENGTH (FEET)	WIDTH (FEET)	THICKNESS (INCHES)
18	L	6	6	15.75
30	L	10	10	15.75

* MINIMUM RIPRAP LAYER THICKNESS

CALL UTILITY NOTIFICATION CENTER OF COLORADO

1-800-922-1987

CALL 2 BUSINESS DAYS IN ADVANCE BEFORE YOU DIG, GRADE, OR EXCAVATE FOR THE MARKING OF UNDERGROUND MEMBER UTILITIES

ENGINEERS NOTE TO CONTRACTOR:

THE EXISTENCE AND LOCATION OF ANY UNDERGROUND UTILITIES, PIPES, AND/OR STRUCTURES SHOWN ON THESE PLANS WERE OBTAINED BY A SEARCH OF AVAILABLE RECORDS. TO THE BEST OF OUR KNOWLEDGE, THERE ARE NO EXISTING UTILITIES EXCEPT AS SHOWN ON THESE PLANS. THE CONTRACTOR SHALL ASCERTAIN THE TRUE VERTICAL AND HORIZONTAL LOCATION OF THOSE UNDERGROUND UTILITIES TO BE USED AND SHALL BE RESPONSIBLE FOR ANY DAMAGE TO ANY PUBLIC OR PRIVATE UTILITIES, SHOWN OR NOT SHOWN HEREON.

BASIS OF BEARINGS:

BEARINGS BASED ON THE NORTH LINE OF LOT 3 AS NORTH 88°03'20" EAST BETWEEN MONUMENTS SHOWN ON THE TOPOGRAPHIC SURVEY.

BENCH MARK

MARTIN/MARTIN ENGINEERING PROJECT BENCHMARK, USGS DISK STAMPED Y259 (LAT 33°46'33", LONG 104°55'49") ELEVATION 5257.26 (NGVD 29 5257.37 RECORD)

CITY AND COUNTY OF DENVER
Development Services
Site Engineering

DS Project NO. PR-2011-065 (2011-0177)

PROJECT NAME: SAFEWAY DISTRIBUTION CENTER

DESIGNED BY	DATE	DATE ISSUED:	DRAWING NO.
DAP	10-24-10	09-28-11	C7.0
DRAWN BY	DATE		
DAP	10-24-10		
CHECKED BY	DATE	SHEET 17 OF 49 SHEETS	
AEH	09-26-11		

PREPARED UNDER THE SUPERVISION OF TAIT & ASSOCIATES, INC.

ALEX HOME, PE 41703 DATE

COLORADO LICENSED ALEX HOME 41703 PROFESSIONAL ENGINEER

NO.	DESCRIPTION	REVISIONS	BY	DATE

TAIT & ASSOCIATES, INC.
6163 EAST COUNTY ROAD 16
LOVELAND, CO 80537
(970) 613-1447 TEL
(970) 613-1897 FAX
www.tait.com

TAIT

STORM DRAIN PLAN AND PROFILE

NORTH EMPLOYEE AND VISITOR PARKING AREA
SWC I-70 AND DAHLIA STREET ,DENVER, CO
SAFEWAY INC.

DRAWN: DAP
DATE: 10-24-10
CHECKED: AEH
DATE: 09-26-11
REVISION #: 3
DATE: 08-17-11
JOB NO: CO1176F

C7.0

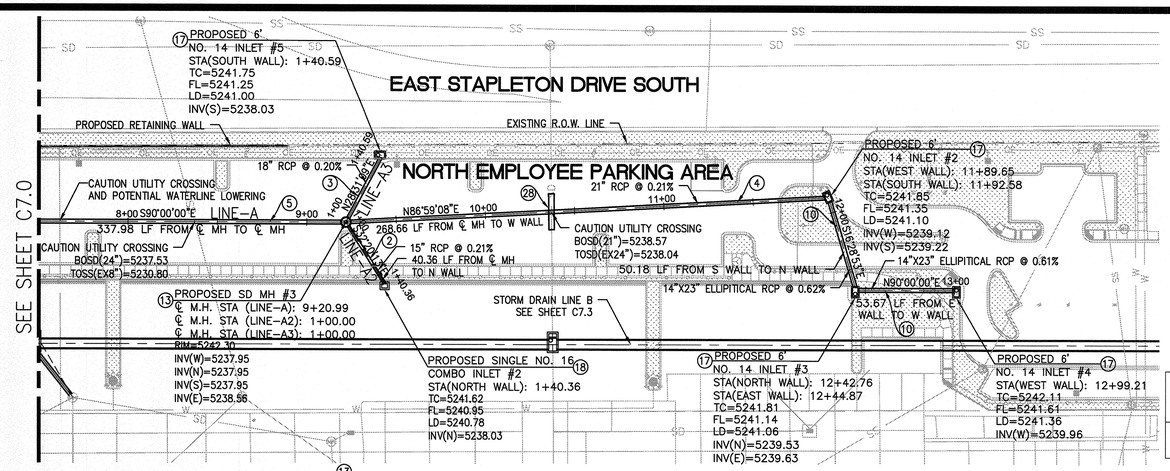

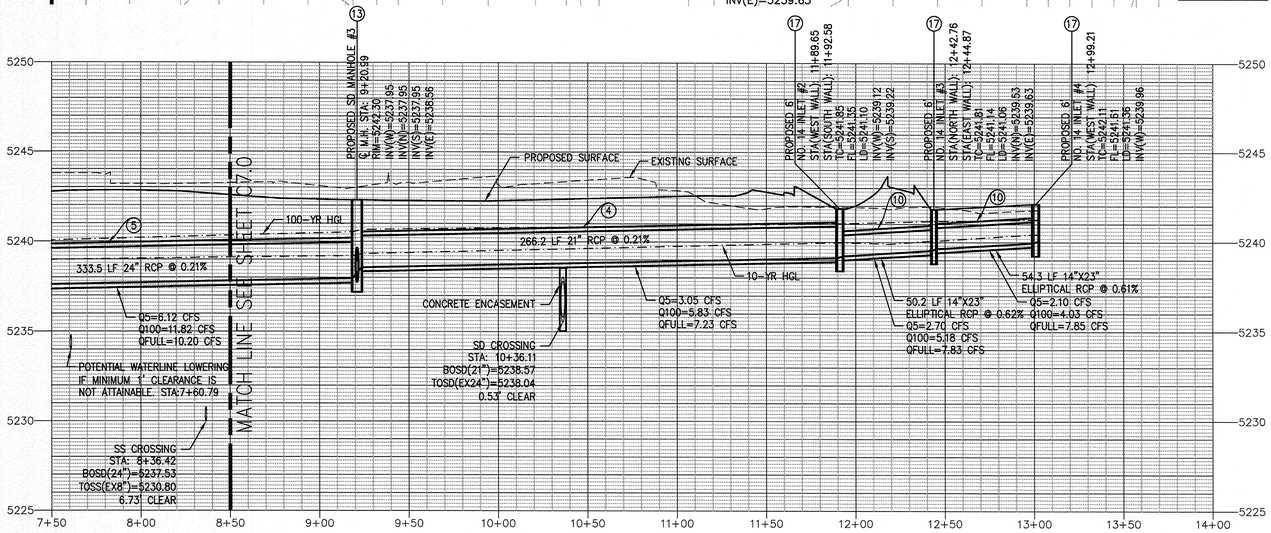

STORM PLAN & PROFILE–LINE A

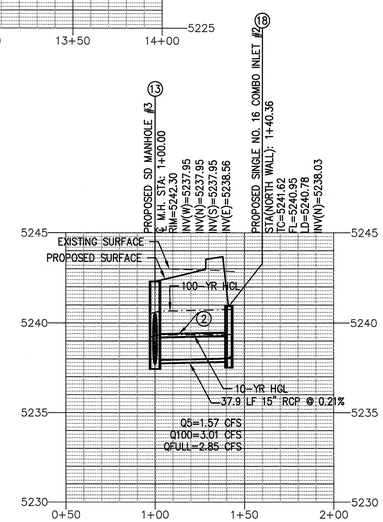

STORM PROFILE–LINE A2

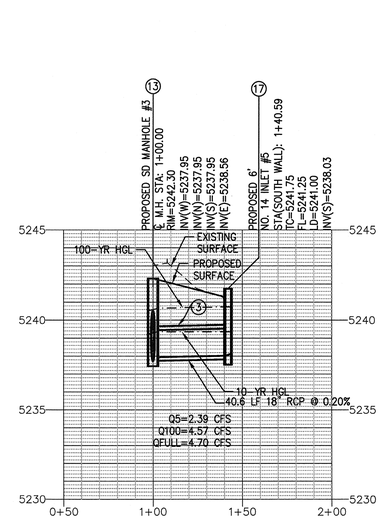

STORM PROFILE–LINE A3

ABBREVIATIONS:

BOP	BOTTOM OF POND
BOSD	BOTTOM OF STORM DRAIN
CFS	CUBIC FEET PER SECOND
EX	EXISTING
FES	FLARED END SECTION
HGL	HYDRAULIC GRADE LINE
HORIZ	HORIZONTAL (SCALE)
INV	INVERT
LD	LOCAL DEPRESSION
LF	LINEAR FEET
MH	MANHOLE
RCP	REINFORCED CONCRETE PIPE
SD	STORM DRAIN
SS	SEWER (SANITARY)
STA	STATION
TC	TOP OF CURB
TOSD	TOP OF STORM DRAIN
TOSS	TOP OF SANITARY SEWER
Q	FLOW RATE
VERT	VERTICAL (SCALE)
W	WATER
YR	YEAR

LEGEND

- EXISTING CHAIN LINK FENCE
- EXISTING SANITARY SEWER
- EXISTING WATERLINE
- EXISTING STORM SEWER
- EXISTING OVERHEAD ELECTRIC
- EXISTING STORM MANHOLE
- EXISTING UTILITY POLE
- EXISTING BOLLARD
- EXISTING LIGHT POLE
- EXISTING FIRE HYDRANT
- PROPOSED CHAIN LINK FENCE
- PROPOSED SANITARY SEWER
- PROPOSED STORM DRAIN
- PROPOSED MANHOLE
- PROPOSED TURNSTILE
- PROPOSED CONCRETE BARRIER
- PROPOSED BOLLARD
- PROPOSED FIRE HYDRANT
- PROPOSED LIGHT POLE

CONSTRUCTION NOTES:

1. INSTALL 12" RCP STORM DRAIN. TRENCHING PER CITY OF DENVER STANDARD S-301.1 AND S-301.2
2. INSTALL 15" RCP STORM DRAIN. TRENCHING PER CITY OF DENVER STANDARD S-301.1 AND S-301.2
3. INSTALL 18" RCP STORM DRAIN. TRENCHING PER CITY OF DENVER STANDARD S-301.1 AND S-301.2
4. INSTALL 21" RCP STORM DRAIN. TRENCHING PER CITY OF DENVER STANDARD S-301.1 AND S-301.2
5. INSTALL 24" RCP STORM DRAIN. TRENCHING PER CITY OF DENVER STANDARD S-301.1 AND S-301.2
6. INSTALL 27" RCP STORM DRAIN. TRENCHING PER CITY OF DENVER STANDARD S-301.1 AND S-301.2
7. INSTALL 30" RCP STORM DRAIN. TRENCHING PER CITY OF DENVER STANDARD S-301.1 AND S-301.2
8. INSTALL 42" RCP STORM DRAIN. TRENCHING PER CITY OF DENVER STANDARD S-301.1 AND S-301.2
9. INSTALL 60" RCP STORM DRAIN. TRENCHING PER CITY OF DENVER STANDARD S-301.1 AND S-301.2
10. INSTALL 14"X23" ELLIPTICAL RCP STORM DRAIN. TRENCHING PER CITY OF DENVER STANDARD S-301.1 AND S-301.2
11. INSTALL 43"X68" ELLIPTICAL RCP STORM DRAIN. TRENCHING PER CITY OF DENVER STANDARD S-301.1 AND S-301.2
12. INSTALL 4' I.D. MANHOLES PER CITY OF DENVER STANDARD S-501.1
13. INSTALL 5' I.D. MANHOLES PER CITY OF DENVER STANDARD S-501.1
14. INSTALL 6' I.D. MANHOLES PER CITY OF DENVER STANDARD S-501.1
15. INSTALL TYPE B MANHOLES PER CITY OF DENVER STANDARD S-503
16. INSTALL TYPE B OR TYPE P MANHOLE MODIFIED TO INCLUDE WEIR STRUCTURE PER DETAILS ON SHEET C7.4.
17. INSTALL NO. 14 INLETS PER CITY AND COUNTY OF DENVER STANDARD S-620.1 AND S-620.2.
18. INSTALL SINGLE NO. 16 COMBO OR AREA INLET PER CITY OF DENVER STANDARD S-616.1 AND S-616V. TYPE PER PLAN.
19. INSTALL 12" STORM DRAIN INLET CONNECTION PER CITY OF DENVER STANDARD S-450
20. INSTALL 18" FLARED END SECTION WITH MECHANICAL CONNECTORS AND CUT OFF WALLS PER DETAIL ON SHEET C5.3
21. INSTALL 24" FLARED END SECTION WITH MECHANICAL CONNECTORS AND CUT OFF WALLS PER DETAIL ON SHEET C5.3
22. INSTALL 30" FLARED END SECTION WITH MECHANICAL CONNECTORS AND CUT OFF WALLS PER DETAIL ON SHEET C5.3
23. INSTALL 42" FLARED END SECTION WITH MECHANICAL CONNECTORS AND CUT OFF WALLS PER DETAIL ON SHEET C5.3
24. INSTALL 60" FLARED END SECTION WITH MECHANICAL CONNECTORS AND CUT OFF WALLS PER DETAIL ON SHEET C5.3
25. INSTALL OUTLET STRUCTURE PER DETAIL ON SHEET C5.3.
26. INSTALL CONTAINMENT GATE PER MANUFACTURE RECOMMENDATIONS. WATERMAN MODEL AC-31 ALUMINUM CANAL GATE OR APPROVED EQUAL. SIZE PER PLAN.
27. INSTALL EMERGENCY OVERFLOW PER DETAIL ON SHEET C5.3.
28. INSTALL CONCRETE ENCASEMENT PER CITY AND COUNTY OF DENVER STANDARD S-350.
29. INSTALL OUTLET STRUCTURE WARNING SIGN PER UDFCD STANDARDS.
30. INSTALL 4" SLOTTED UNDERDRAIN SYSTEM SLOPED @ 0.20% WITH CLEANOUTS AS SHOWN ON PLANS PER UDFCD REQUIREMENTS.

NOTE: CONTRACTOR TO VERIFY ELEVATIONS OF EXISTING UTILITIES AND NOTIFY ENGINEER OF ANY DISCREPANCIES FROM THE ELEVATIONS SHOWN ON PLANS PRIOR TO PROCEEDING WITH WORK.

NO.	DESCRIPTION	BY	DATE
	REVISIONS		

TAIT & ASSOCIATES, INC.
6163 EAST COUNTY ROAD 16
LOVELAND, CO 80537
(970) 613-1447 TEL
(970) 613-1897 FAX
www.tait.com

TAIT

STORM DRAIN PLAN AND PROFILE

NORTH EMPLOYEE AND VISITOR PARKING AREA
SWC I-70 AND DAHLIA STREET, DENVER, CO
SAFEWAY INC.

CALL UTILITY NOTIFICATION CENTER OF COLORADO

1-800-922-1987

CALL 2 BUSINESS DAYS IN ADVANCE BEFORE YOU DIG, GRADE, OR EXCAVATE FOR THE MARKING OF UNDERGROUND MEMBER UTILITIES

ENGINEERS NOTE TO CONTRACTOR:

THE EXISTENCE AND LOCATION OF ANY UNDERGROUND UTILITIES, PIPES, AND/OR STRUCTURES SHOWN ON THESE PLANS WERE OBTAINED BY A SEARCH OF AVAILABLE RECORDS. TO THE BEST OF OUR KNOWLEDGE, THERE ARE NO EXISTING UTILITIES EXCEPT AS SHOWN ON THESE PLANS. THE CONTRACTOR SHALL ASCERTAIN THE TRUE VERTICAL AND HORIZONTAL LOCATION OF THOSE UNDERGROUND UTILITIES TO BE USED AND SHALL BE RESPONSIBLE FOR ANY DAMAGE TO ANY PUBLIC OR PRIVATE UTILITIES, SHOWN OR NOT SHOWN HEREON.

BASIS OF BEARINGS:

BEARINGS BASED ON THE NORTH LINE OF LOT 3 AS NORTH 88°03'20" EAST BETWEEN MONUMENTS SHOWN ON THE TOPOGRAPHIC SURVEY.

BENCH MARK

MARTIN/MARTIN ENGINEERING PROJECT BENCHMARK, USGS DISK STAMPED Y259 (LAT 33°46'33", LONG 104°55'49") ELEVATION 5257.26 (NGVD 29 5257.37 RECORD)

CITY AND COUNTY OF DENVER
Development Services
Site Engineering

DS Project NO. PR-2011-065 (2011-0177)

PROJECT NAME: SAFEWAY DISTRIBUTION CENTER

DESIGNED BY DAP	DATE 10-24-10	DATE ISSUED: 09-28-11	DRAWING NO.
DRAWN BY DAP	DATE 10-26-10		C7.1
CHECKED BY AEH	DATE 09-26-11	SHEET 18 OF 49 SHEETS	

PREPARED UNDER THE SUPERVISION OF TAIT & ASSOCIATES, INC.

ALEX HOIME, PE 41703 — DATE 9-28-11

COLORADO LICENSED ALEX HOIME 41703 PROFESSIONAL ENGINEER

DRAWN: DAP
DATE: 10-24-10
CHECKED: AEH
DATE: 09-26-11
REVISION #: 3
DATE: 08-17-11
JOB NO: CO1176F

C7.1

CITY OF DENVER APPROVAL SET - 09/28/11

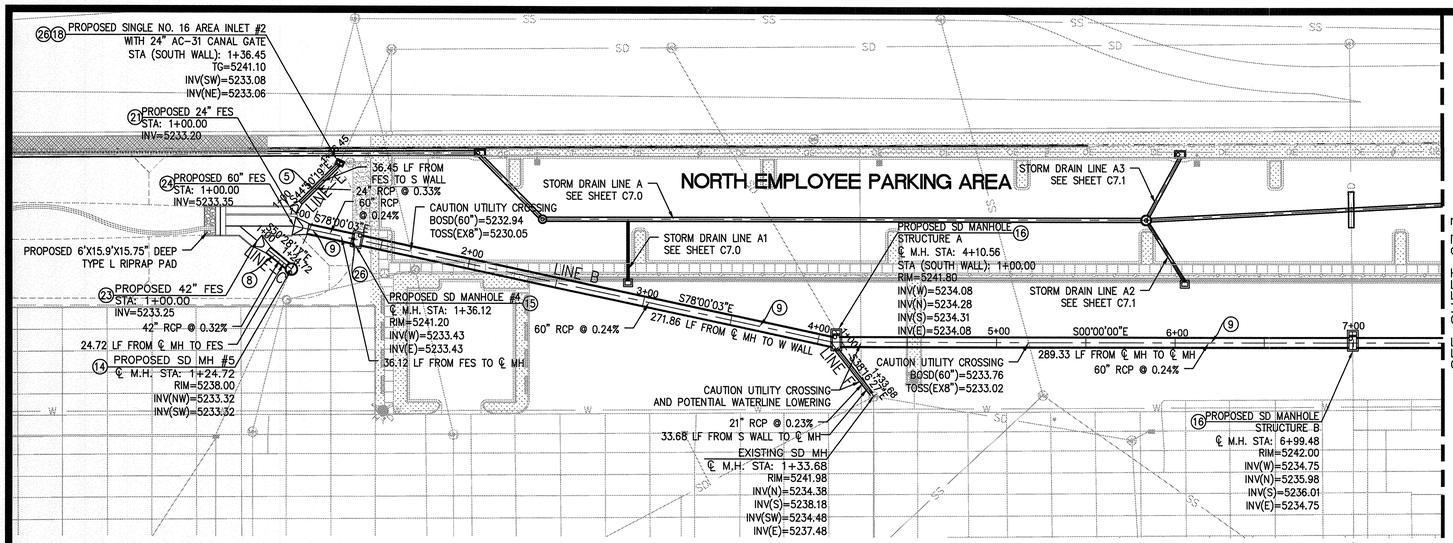

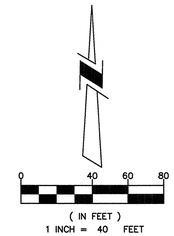

PROFILE SCALE
HORIZ. 1"=40'
VERT. 1"=4'

PLAN SCALE
1"=40'

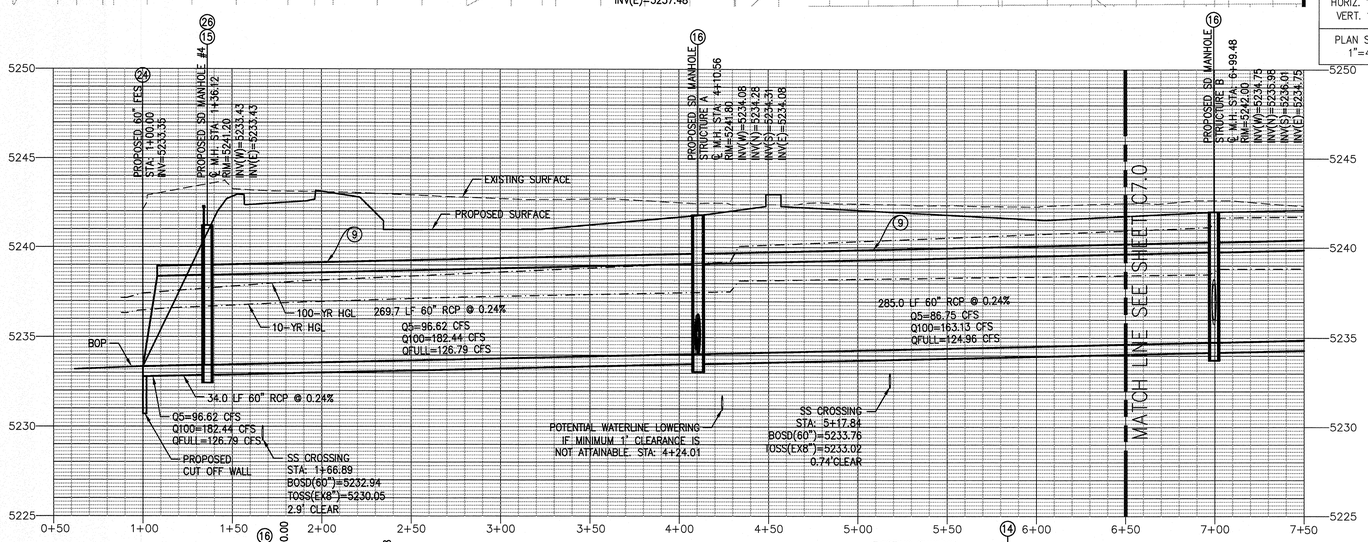

STORM PROFILE–LINE B

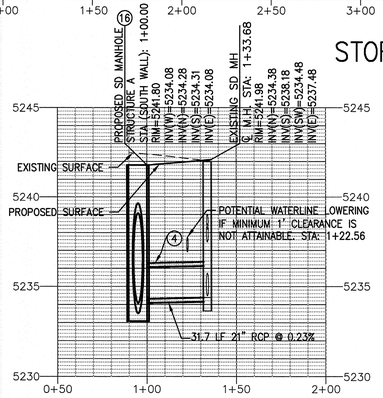

STORM PROFILE–LINE F

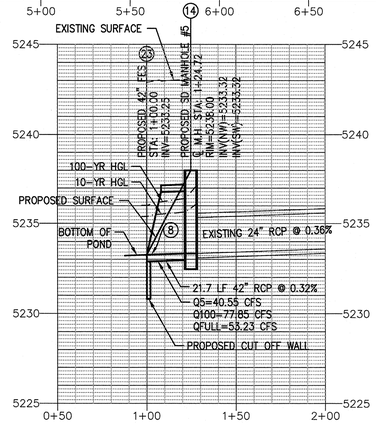

STORM PROFILE–LINE C

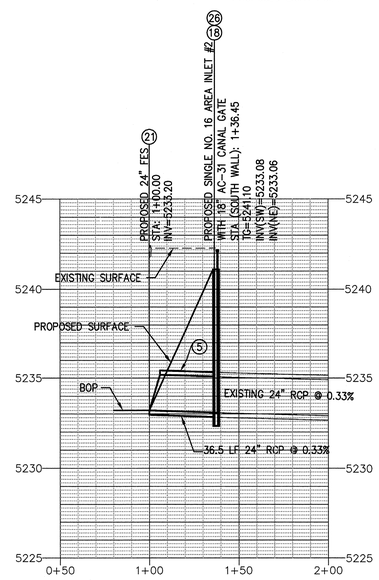

STORM PROFILE–LINE E

ABBREVIATIONS:

BOP	BOTTOM OF POND
BOSD	BOTTOM OF STORM DRAIN
CFS	CUBIC FEET PER SECOND
EX	EXISTING
FES	FLARED END SECTION
HGL	HYDRAULIC GRADE LINE
HORIZ	HORIZONTAL (SCALE)
INV	INVERT
LD	LOCAL DEPRESSION
LF	LINEAR FEET
MH	MANHOLE
RCP	REINFORCED CONCRETE PIPE
SD	STORM DRAIN
SS	SEWER (SANITARY)
STA	STATION
TC	TOP OF CURB
TOSD	TOP OF STORM DRAIN
TOSS	TOP OF SANITARY SEWER
Q	FLOW RATE
VERT	VERTICAL (SCALE)
W	WATER

LEGEND

- EXISTING CHAIN LINK FENCE
- EXISTING SANITARY SEWER
- EXISTING WATERLINE
- EXISTING STORM SEWER
- EXISTING OVERHEAD ELECTRIC
- EXISTING STORM MANHOLE
- EXISTING UTILITY POLE
- EXISTING BOLLARD
- EXISTING LIGHT POLE
- EXISTING FIRE HYDRANT
- PROPOSED CHAIN LINK FENCE
- PROPOSED SANITARY SEWER
- PROPOSED STORM DRAIN
- PROPOSED MANHOLE
- PROPOSED TURNSTILE
- PROPOSED CONCRETE BARRIER
- PROPOSED BOLLARD
- PROPOSED FIRE HYDRANT
- PROPOSED LIGHT POLE

CONSTRUCTION NOTES:

1. INSTALL 12" RCP STORM DRAIN. TRENCHING PER CITY OF DENVER STANDARD S-301.1 AND S-301.2
2. INSTALL 15" RCP STORM DRAIN. TRENCHING PER CITY OF DENVER STANDARD S-301.1 AND S-301.2
3. INSTALL 18" RCP STORM DRAIN. TRENCHING PER CITY OF DENVER STANDARD S-301.1 AND S-301.2
4. INSTALL 21" RCP STORM DRAIN. TRENCHING PER CITY OF DENVER STANDARD S-301.1 AND S-301.2
5. INSTALL 24" RCP STORM DRAIN. TRENCHING PER CITY OF DENVER STANDARD S-301.1 AND S-301.2
6. INSTALL 27" RCP STORM DRAIN. TRENCHING PER CITY OF DENVER STANDARD S-301.1 AND S-301.2
7. INSTALL 30" RCP STORM DRAIN. TRENCHING PER CITY OF DENVER STANDARD S-301.1 AND S-301.2
8. INSTALL 42" RCP STORM DRAIN. TRENCHING PER CITY OF DENVER STANDARD S-301.1 AND S-301.2
9. INSTALL 60" RCP STORM DRAIN. TRENCHING PER CITY OF DENVER STANDARD S-301.1 AND S-301.2
10. INSTALL 14"X23" ELLIPTICAL RCP STORM DRAIN. TRENCHING PER CITY OF DENVER STANDARD S-301.1 AND S-301.2
11. INSTALL 43"X68" ELLIPTICAL RCP STORM DRAIN. TRENCHING PER CITY OF DENVER STANDARD S-301.1 AND S-301.2
12. INSTALL 4' I.D. MANHOLES PER CITY OF DENVER STANDARD S-501.1
13. INSTALL 5' I.D. MANHOLES PER CITY OF DENVER STANDARD S-501.1
14. INSTALL 6' I.D. MANHOLES PER CITY OF DENVER STANDARD S-501.1
15. INSTALL TYPE B MANHOLES PER CITY OF DENVER STANDARD S-503
16. INSTALL TYPE B OR TYPE P MANHOLE MODIFIED TO INCLUDE WEIR STRUCTURE PER DETAILS ON SHEET C7.4.
17. INSTALL NO. 14 INLETS PER CITY AND COUNTY OF DENVER STANDARD S-620.1 AND S-620.2.
18. INSTALL SINGLE NO. 16 COMBO OR AREA INLET PER CITY OF DENVER STANDARD S-616.1 AND S-616V. TYPE PER PLAN.
19. INSTALL 12" STORM DRAIN INLET CONNECTION PER CITY OF DENVER STANDARD S-450
20. INSTALL 18" FLARED END SECTION WITH MECHANICAL CONNECTORS AND CUT OFF WALLS PER DETAIL ON SHEET C5.3
21. INSTALL 24" FLARED END SECTION WITH MECHANICAL CONNECTORS AND CUT OFF WALLS PER DETAIL ON SHEET C5.3
22. INSTALL 30" FLARED END SECTION WITH MECHANICAL CONNECTORS AND CUT OFF WALLS PER DETAIL ON SHEET C5.3
23. INSTALL 42" FLARED END SECTION WITH MECHANICAL CONNECTORS AND CUT OFF WALLS PER DETAIL ON SHEET C5.3
24. INSTALL 60" FLARED END SECTION WITH MECHANICAL CONNECTORS AND CUT OFF WALLS PER DETAIL ON SHEET C5.3
25. INSTALL OUTLET STRUCTURE PER DETAIL ON SHEET C5.3.
26. INSTALL CONTAINMENT GATE PER MANUFACTURE RECOMMENDATIONS. WATERMAN MODEL AC-31 ALUMINUM CANAL GATE OR APPROVED EQUAL. SIZE PER PLAN.
27. INSTALL EMERGENCY OVERFLOW PER DETAIL ON SHEET C5.3.
28. INSTALL CONCRETE ENCASEMENT PER CITY AND COUNTY OF DENVER STANDARD S-350.
29. INSTALL OUTLET STRUCTURE WARNING SIGN PER UDFCD STANDARDS.
30. INSTALL 4" SLOTTED UNDERDRAIN SYSTEM SLOPED @ 0.20% WITH CLEANOUTS AS SHOWN ON PLANS PER UDFCD REQUIREMENTS.

NOTE: CONTRACTOR TO VERIFY ELEVATIONS OF EXISTING UTILITIES AND NOTIFY ENGINEER OF ANY DISCREPANCIES FROM THE ELEVATIONS SHOWN ON PLANS PRIOR TO PROCEEDING WITH WORK.

CALL UTILITY NOTIFICATION CENTER OF COLORADO

1-800-922-1987

CALL 2 BUSINESS DAYS IN ADVANCE BEFORE YOU DIG, GRADE, OR EXCAVATE FOR THE MARKING OF UNDERGROUND MEMBER UTILITIES

ENGINEERS NOTE TO CONTRACTOR:

THE EXISTENCE AND LOCATION OF ANY UNDERGROUND UTILITIES, PIPES, AND/OR STRUCTURES SHOWN ON THESE PLANS WERE OBTAINED BY A SEARCH OF AVAILABLE RECORDS. TO THE BEST OF OUR KNOWLEDGE, THERE ARE NO EXISTING UTILITIES EXCEPT AS SHOWN ON THESE PLANS. THE CONTRACTOR SHALL ASCERTAIN THE TRUE VERTICAL AND HORIZONTAL LOCATION OF THOSE UNDERGROUND UTILITIES TO BE USED AND SHALL BE RESPONSIBLE FOR ANY DAMAGE TO ANY PUBLIC OR PRIVATE UTILITIES, SHOWN OR NOT SHOWN HEREON.

BASIS OF BEARINGS:

BEARINGS BASED ON THE NORTH LINE OF LOT 3 AS NORTH 88°03'20" EAST BETWEEN MONUMENTS SHOWN ON THE TOPOGRAPHIC SURVEY.

BENCH MARK

MARTIN/MARTIN ENGINEERING PROJECT BENCHMARK, USGS DISK STAMPED Y259 (LAT 33°46'33", LONG 104°55'49") ELEVATION 5257.26 (NGVD 29 5257.37 RECORD)

CITY AND COUNTY OF DENVER
Development Services
Site Engineering

DS Project NO. PR-2011-065 (2011-0177)

PROJECT NAME: SAFEWAY DISTRIBUTION CENTER

DESIGNED BY	DATE	DATE ISSUED:	DRAWING NO.
DAP	10-24-10	09-28-11	C7.2
DRAWN BY	DATE		
DAP	10-24-10		
CHECKED BY	DATE	SHEET 19 OF 48 SHEETS	
AEH	09-26-11		

PREPARED UNDER THE SUPERVISION OF TAIT & ASSOCIATES, INC.

ALEX HOIME, PE 41703 DATE

COLORADO LICENSED ALEX HOIME 41703 PROFESSIONAL ENGINEER

NO.	DESCRIPTION	BY	DATE
	REVISIONS		

TAIT & ASSOCIATES, INC.
6163 EAST COUNTY ROAD 16
LOVELAND, CO 80537
(970) 613-1447 TEL
(970) 613-1897 FAX
www.tait.com

TAIT

STORM DRAIN PLAN AND PROFILE

NORTH EMPLOYEE AND VISITOR PARKING AREA
SWC I-70 AND DAHLIA STREET ,DENVER, CO
SAFEWAY INC.

DRAWN: DAP
DATE: 10-24-10
CHECKED: AEH
DATE: 09-26-11
REVISION #: 3
DATE: 08-17-11
JOB NO: CO1176F

C7.2

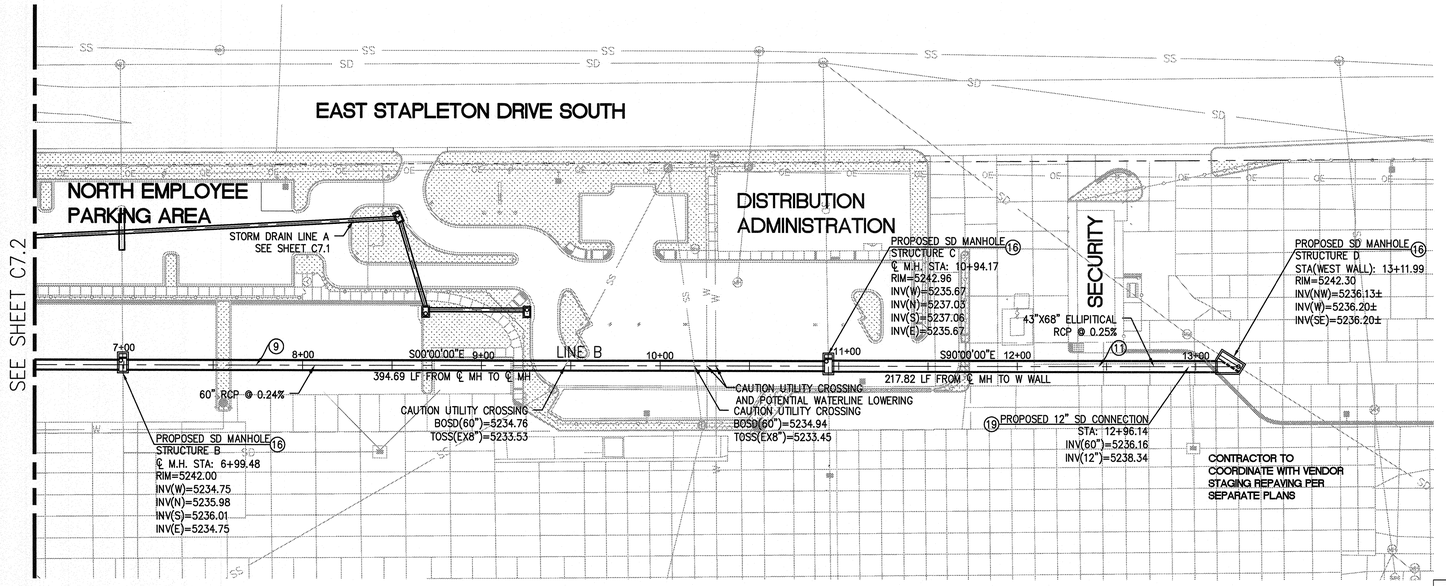

(IN FEET)
1 INCH = 40 FEET

PROFILE SCALE
HORIZ. 1"=40'
VERT. 1"=4'

PLAN SCALE
1"=40'

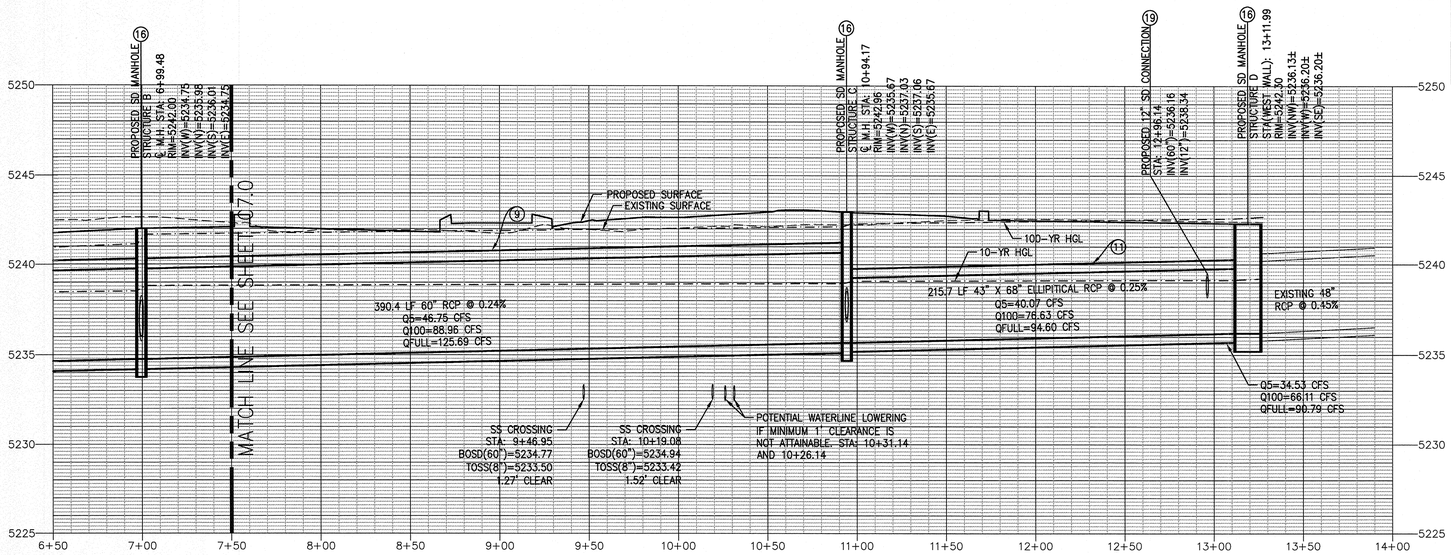

STORM PROFILE–LINE B

ABBREVIATIONS:

BOP	BOTTOM OF POND
BOSD	BOTTOM OF STORM DRAIN
CFS	CUBIC FEET PER SECOND
EX	EXISTING
FES	FLARED END SECTION
HGL	HYDRAULIC GRADE LINE
HORIZ	HORIZONTAL (SCALE)
INV	INVERT
LD	LOCAL DEPRESSION
LF	LINEAR FEET
MH	MANHOLE
RCP	REINFORCED CONCRETE PIPE
SD	STORM DRAIN
SS	SEWER (SANITARY)
STA	STATION
TC	TOP OF CURB
TOSD	TOP OF STORM DRAIN
TOSS	TOP OF SANITARY SEWER
Q	FLOW RATE
VERT	VERTICAL (SCALE)
W	WATER
YR	YEAR

LEGEND

- EXISTING CHAIN LINK FENCE
- EXISTING SANITARY SEWER
- EXISTING WATERLINE
- EXISTING STORM SEWER
- EXISTING OVERHEAD ELECTRIC
- EXISTING STORM MANHOLE
- EXISTING UTILITY POLE
- EXISTING BOLLARD
- EXISTING LIGHT POLE
- EXISTING FIRE HYDRANT
- PROPOSED CHAIN LINK FENCE
- PROPOSED SANITARY SEWER
- PROPOSED STORM DRAIN
- PROPOSED MANHOLE
- PROPOSED TURNSTILE
- PROPOSED CONCRETE BARRIER
- PROPOSED BOLLARD
- PROPOSED FIRE HYDRANT
- PROPOSED LIGHT POLE

CONSTRUCTION NOTES:

1. INSTALL 12" RCP STORM DRAIN. TRENCHING PER CITY OF DENVER STANDARD S-301.1 AND S-301.2
2. INSTALL 15" RCP STORM DRAIN. TRENCHING PER CITY OF DENVER STANDARD S-301.1 AND S-301.2
3. INSTALL 18" RCP STORM DRAIN. TRENCHING PER CITY OF DENVER STANDARD S-301.1 AND S-301.2
4. INSTALL 21" RCP STORM DRAIN. TRENCHING PER CITY OF DENVER STANDARD S-301.1 AND S-301.2
5. INSTALL 24" RCP STORM DRAIN. TRENCHING PER CITY OF DENVER STANDARD S-301.1 AND S-301.2
6. INSTALL 27" RCP STORM DRAIN. TRENCHING PER CITY OF DENVER STANDARD S-301.1 AND S-301.2
7. INSTALL 30" RCP STORM DRAIN. TRENCHING PER CITY OF DENVER STANDARD S-301.1 AND S-301.2
8. INSTALL 42" RCP STORM DRAIN. TRENCHING PER CITY OF DENVER STANDARD S-301.1 AND S-301.2
9. INSTALL 60" RCP STORM DRAIN. TRENCHING PER CITY OF DENVER STANDARD S-301.1 AND S-301.2
10. INSTALL 14"X23" ELLIPTICAL RCP STORM DRAIN. TRENCHING PER CITY OF DENVER STANDARD S-301.1 AND S-301.2
11. INSTALL 43"X68" ELLIPTICAL RCP STORM DRAIN. TRENCHING PER CITY OF DENVER STANDARD S-301.1 AND S-301.2
12. INSTALL 4' I.D. MANHOLES PER CITY OF DENVER STANDARD S-501.1
13. INSTALL 5' I.D. MANHOLES PER CITY OF DENVER STANDARD S-501.1
14. INSTALL 6' I.D. MANHOLES PER CITY OF DENVER STANDARD S-501.1
15. INSTALL TYPE B MANHOLES PER CITY OF DENVER STANDARD S-503
16. INSTALL TYPE B OR TYPE P MANHOLE MODIFIED TO INCLUDE WEIR STRUCTURE PER DETAILS ON SHEET C7.4.
17. INSTALL NO. 14 INLETS PER CITY AND COUNTY OF DENVER STANDARD S-620.1 AND S-620.2.
18. INSTALL SINGLE NO. 16 COMBO OR AREA INLET PER CITY OF DENVER STANDARD S-616.1 AND S-616V. TYPE PER PLAN.
19. INSTALL 12" STORM DRAIN INLET CONNECTION PER CITY OF DENVER STANDARD S-450
20. INSTALL 18" FLARED END SECTION WITH MECHANICAL CONNECTORS AND CUT OFF WALLS PER DETAIL ON SHEET C5.3
21. INSTALL 24" FLARED END SECTION WITH MECHANICAL CONNECTORS AND CUT OFF WALLS PER DETAIL ON SHEET C5.3
22. INSTALL 30" FLARED END SECTION WITH MECHANICAL CONNECTORS AND CUT OFF WALLS PER DETAIL ON SHEET C5.3
23. INSTALL 42" FLARED END SECTION WITH MECHANICAL CONNECTORS AND CUT OFF WALLS PER DETAIL ON SHEET C5.3
24. INSTALL 60" FLARED END SECTION WITH MECHANICAL CONNECTORS AND CUT OFF WALLS PER DETAIL ON SHEET C5.3
25. INSTALL OUTLET STRUCTURE PER DETAIL ON SHEET C5.3.
26. INSTALL CONTAINMENT GATE PER MANUFACTURE RECOMMENDATIONS. WATERMAN MODEL AC-31 ALUMINUM CANAL GATE OR APPROVED EQUAL. SIZE PER PLAN.
27. INSTALL EMERGENCY OVERFLOW PER DETAIL ON SHEET C5.3.
28. INSTALL CONCRETE ENCASEMENT PER CITY AND COUNTY OF DENVER STANDARD S-350.
29. INSTALL OUTLET STRUCTURE WARNING SIGN PER UDFCD STANDARDS.
30. INSTALL 4" SLOTTED UNDERDRAIN SYSTEM SLOPED @ 0.20% WITH CLEANOUTS AS SHOWN ON PLANS PER UDFCD REQUIREMENTS.

NOTE: CONTRACTOR TO VERIFY ELEVATIONS OF EXISTING UTILITIES AND NOTIFY ENGINEER OF ANY DISCREPANCIES FROM THE ELEVATIONS SHOWN ON PLANS PRIOR TO PROCEEDING WITH WORK.

NO.	DESCRIPTION	BY	DATE
	REVISIONS		

TAIT & ASSOCIATES, INC.
6163 EAST COUNTY ROAD 16
LOVELAND, CO 80537
(970) 613-1447 TEL
(970) 613-1897 FAX
www.tait.com

TAIT

STORM DRAIN PLAN AND PROFILE
NORTH EMPLOYEE AND VISITOR PARKING AREA
SWC I-70 AND DAHLIA STREET ,DENVER, CO
SAFEWAY INC.

CALL UTILITY NOTIFICATION CENTER OF COLORADO
1-800-922-1987
CALL 2 BUSINESS DAYS IN ADVANCE BEFORE YOU DIG, GRADE, OR EXCAVATE FOR THE MARKING OF UNDERGROUND MEMBER UTILITIES

ENGINEERS NOTE TO CONTRACTOR:

THE EXISTENCE AND LOCATION OF ANY UNDERGROUND UTILITIES, PIPES, AND/OR STRUCTURES SHOWN ON THESE PLANS WERE OBTAINED BY A SEARCH OF AVAILABLE RECORDS. TO THE BEST OF OUR KNOWLEDGE, THERE ARE NO EXISTING UTILITIES EXCEPT AS SHOWN ON THESE PLANS. THE CONTRACTOR SHALL ASCERTAIN THE TRUE VERTICAL AND HORIZONTAL LOCATION OF THOSE UNDERGROUND UTILITIES TO BE USED AND SHALL BE RESPONSIBLE FOR ANY DAMAGE TO ANY PUBLIC OR PRIVATE UTILITIES, SHOWN OR NOT SHOWN HEREON.

BASIS OF BEARINGS:

BEARINGS BASED ON THE NORTH LINE OF LOT 3 AS NORTH 88°03'20" EAST BETWEEN MONUMENTS SHOWN ON THE TOPOGRAPHIC SURVEY.

BENCH MARK

MARTIN/MARTIN ENGINEERING PROJECT BENCHMARK, USGS DISK STAMPED Y259 (LAT 33°46'33", LONG 104°55'49") ELEVATION 5257.26 (NGVD 29 5257.37 RECORD)

CITY AND COUNTY OF DENVER
Development Services
Site Engineering

DS Project NO. PR-2011-065 (2011-0177)

PROJECT NAME: SAFEWAY DISTRIBUTION CENTER

DESIGNED BY DAP	DATE 10-24-10	DATE ISSUED: 09-28-11	DRAWING NO.
DRAWN BY DAP	DATE 10-24-10		C7.3
CHECKED BY AEH	DATE 09-26-11	SHEET 20 OF 48 SHEETS	

PREPARED UNDER THE SUPERVISION OF TAIT & ASSOCIATES, INC.

ALEX HOIME, PE 41703 — DATE 9-28-11

COLORADO LICENSED ALEX HOIME 41703 PROFESSIONAL ENGINEER

DRAWN: DAP
DATE: 10-24-10
CHECKED: AEH
DATE: 09-26-11
REVISION #: 3
DATE: 08-17-11
JOB NO: CO1176F

C7.3

CITY OF DENVER APPROVAL SET - 09/28/11

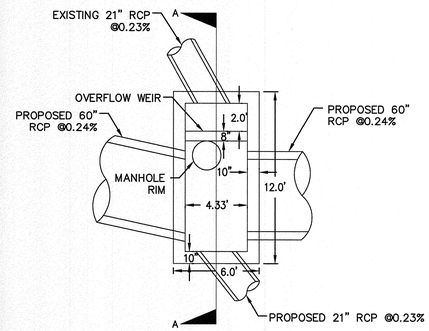

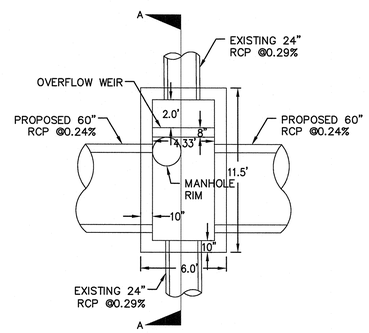

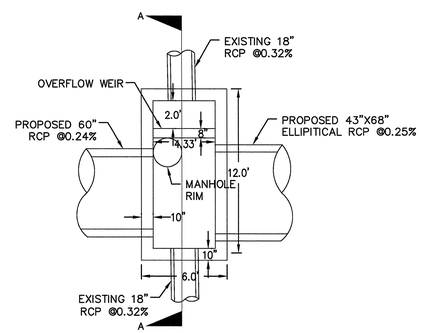

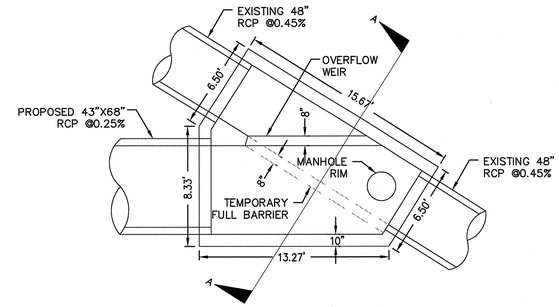

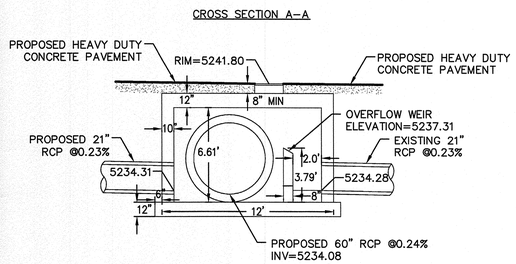

DIVERSION STRUCTURE A

NTS

NOTE: SEE CITY AND COUNTY OF DENVER STANDARD DRAWING NO. S–503 (TYPE B BOX BASE MANHOLE) FOR CONSTRUCTION DETAILS AND SPECIFICATIONS.

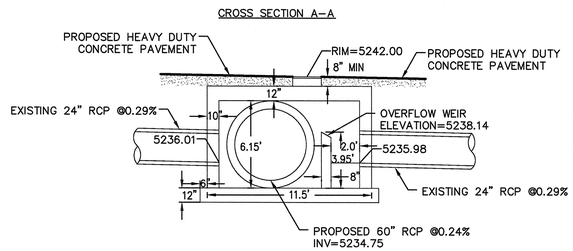

DIVERSION STRUCTURE B

NTS

NOTE: SEE CITY AND COUNTY OF DENVER STANDARD DRAWING NO. S–503 (TYPE B BOX BASE MANHOLE) FOR CONSTRUCTION DETAILS AND SPECIFICATIONS.

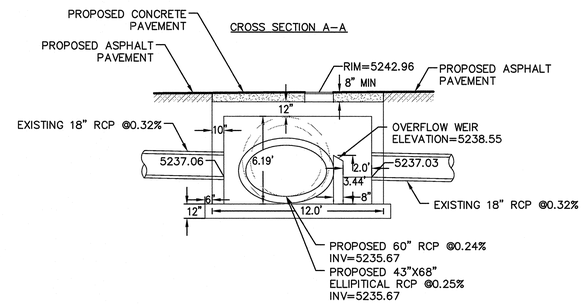

DIVERSION STRUCTURE C

NTS

NOTE: SEE CITY AND COUNTY OF DENVER STANDARD DRAWING NO. S–503 (TYPE B BOX BASE MANHOLE) FOR CONSTRUCTION DETAILS AND SPECIFICATIONS.

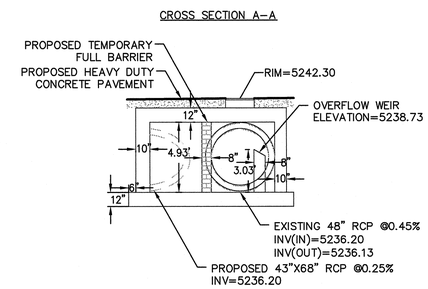

DIVERSION STRUCTURE D

NTS

NOTE: DIVERSION STRUCTURE D TO BE CONSTRUCTED WITH TEMPORARY BARRIER INSTALLED DURING VENDOR STAGING REPAVING. TEMPORARY BARRIER TO BE REMOVED AND DIVERSION WEIR TO BE INSTALLED AT A LATER DATE, BUT NOT BEFORE THE FUTURE PUBLIC STORM SYSTEM HAS BEEN CONSTRUCTED. CONTRACTOR TO COORDINATE WITH CITY ON PUBLIC STORM DRAIN IMPROVEMENTS. SEE DETAIL THIS SHEET AND CITY AND COUNTY OF DENVER STANDARD DRAWING NO. S–504.1 AND S–504.2 (TYPE P MANHOLES) FOR CONSTRUCTION DETAILS AND SPECIFICATIONS.

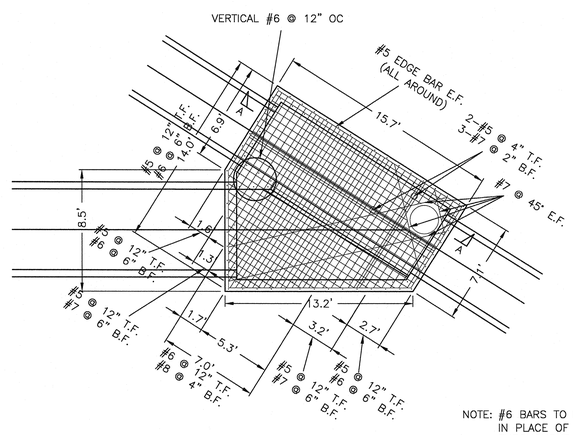

NOTE: #6 BARS TO BE USED IN PLACE OF #5 BARS THROUGHOUT WALLS AND BASE AT LOCATIONS PER CCD S–504.

DIVERSION STRUCTURE D DETAIL
(MODIFICATIONS TO TYPE "P" MANHOLE)
SCALE: 1"=5'

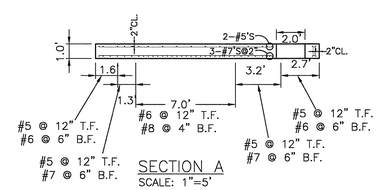

SECTION A
SCALE: 1"=5'

CALL UTILITY NOTIFICATION CENTER OF COLORADO

1–800–922–1987

CALL 2 BUSINESS DAYS IN ADVANCE BEFORE YOU DIG, GRADE, OR EXCAVATE FOR THE MARKING OF UNDERGROUND MEMBER UTILITIES

ENGINEERS NOTE TO CONTRACTOR:

THE EXISTENCE AND LOCATION OF ANY UNDERGROUND UTILITIES, PIPES, AND/OR STRUCTURES SHOWN ON THESE PLANS WERE OBTAINED BY A SEARCH OF AVAILABLE RECORDS. TO THE BEST OF OUR KNOWLEDGE, THERE ARE NO EXISTING UTILITIES EXCEPT AS SHOWN ON THESE PLANS. THE CONTRACTOR SHALL ASCERTAIN THE TRUE VERTICAL AND HORIZONTAL LOCATION OF THOSE UNDERGROUND UTILITIES TO BE USED AND SHALL BE RESPONSIBLE FOR ANY DAMAGE TO ANY PUBLIC OR PRIVATE UTILITIES, SHOWN OR NOT SHOWN HEREON.

BASIS OF BEARINGS:

BEARINGS BASED ON THE NORTH LINE OF LOT 3 AS NORTH 88°03'20" EAST BETWEEN MONUMENTS SHOWN ON THE TOPOGRAPHIC SURVEY.

BENCH MARK

MARTIN/MARTIN ENGINEERING PROJECT BENCHMARK, USGS DISK STAMPED Y259 (LAT 33°46'33", LONG 104°55'49") ELEVATION 5257.26 (NGVD 29 5257.37 RECORD)

CITY AND COUNTY OF DENVER
Development Services
Site Engineering

DS Project NO. PR-2011-065 (2011-0177)

PROJECT NAME: SAFEWAY DISTRIBUTION CENTER

DESIGNED BY	DATE	DATE ISSUED:	DRAWING NO.
DAP	10-24-10	09-28-11	C7.4
DRAWN BY	DATE		
DAP	10-24-10		
CHECKED BY	DATE	SHEET_21_OF_49_SHEETS	
AEH	09-26-11		

PREPARED UNDER THE SUPERVISION OF TAIT & ASSOCIATES, INC.

ALEX HOIME, PE 41703 — DATE 9-28-11

COLORADO LICENSED ALEX HOIME 41703 PROFESSIONAL ENGINEER

NO.	DESCRIPTION	BY	DATE
	REVISIONS		

TAIT & ASSOCIATES, INC.
6163 EAST COUNTY ROAD 16
LOVELAND, CO 80537
(970) 613-1447 TEL
(970) 613-1897 FAX
www.tait.com

TAIT

STORM DRAIN PLAN AND PROFILE
NORTH EMPLOYEE AND VISITOR PARKING AREA
SWC I-70 AND DAHLIA STREET ,DENVER, CO
SAFEWAY INC.

DRAWN: DAP
DATE: 10-24-10
CHECKED: AEH
DATE: 09-26-11
REVISION #: 3
DATE: 08-17-11
JOB NO: CO1176F

C7.4

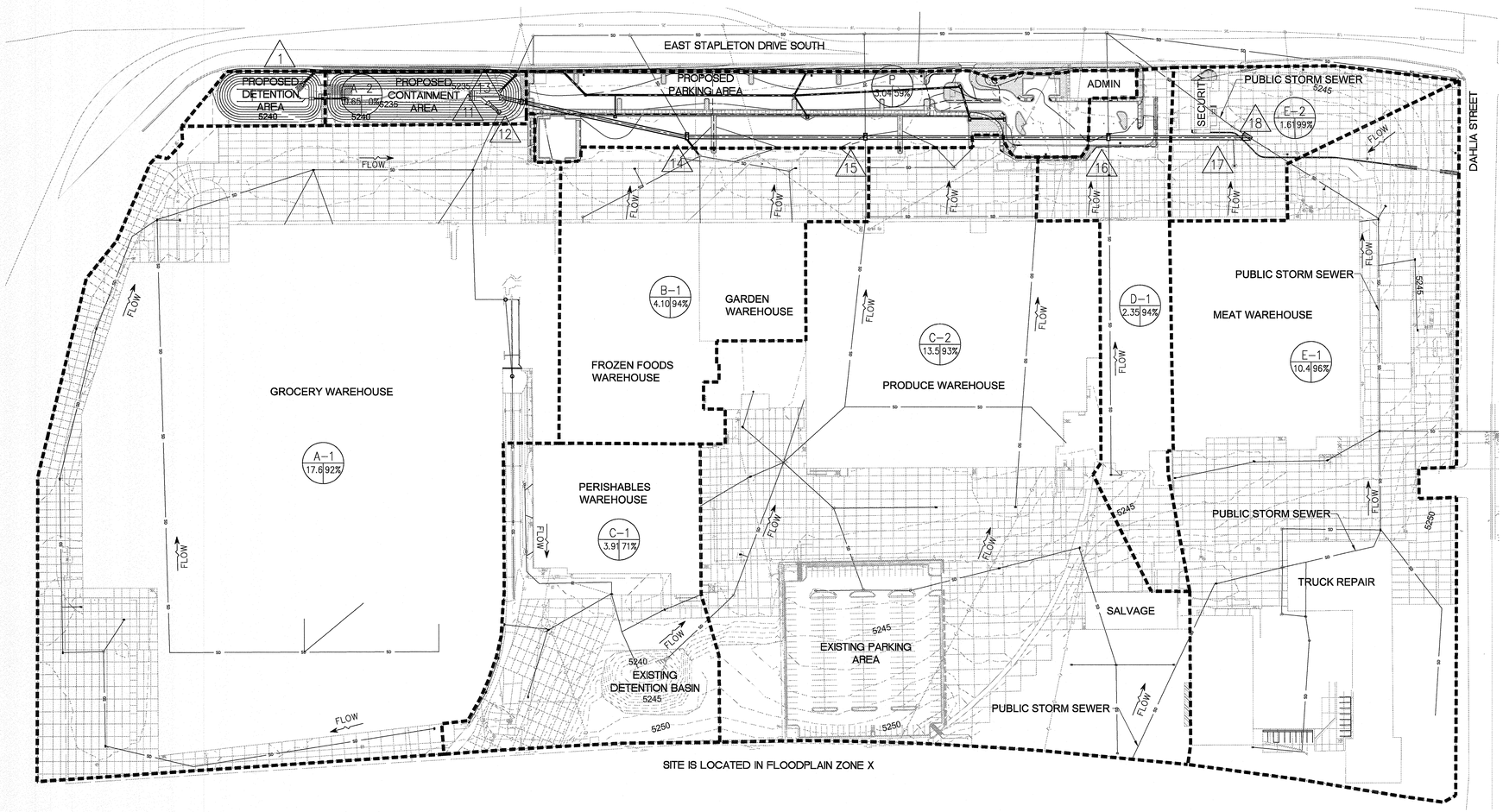

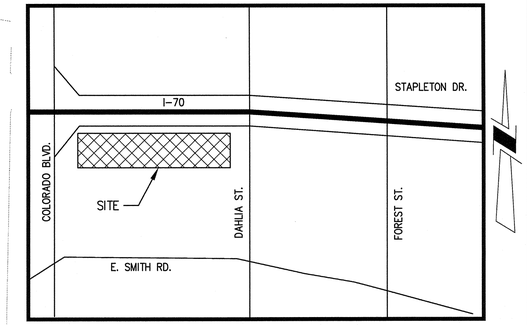

VICINITY MAP
1"=1000'

0 100 150 200
(IN FEET)
1 INCH = 100 FEET

LEGEND

5245	EXISTING MAJOR CONTOUR
SS	EXISTING SANITARY SEWER
W	EXISTING WATERLINE
SD	EXISTING STORM SEWER
OE	EXISTING OVERHEAD ELECTRIC
5245	PROPOSED MAJOR CONTOUR
SS	PROPOSED SANITARY SEWER
	PROPOSED STORM DRAIN

MAJOR BASIN TABLE:

DESIGN POINT	CONTRIBUTING BASIN	BASIN SIZE (acres)	5-YR RUNOFF (cfs)	100-YR RUNOFF (cfs)
1	P	3.0	9.71	21.56
12	A-1	17.6	36.7	77.0
11	A-2	0.7	0.4	2.6
14	B-1	4.1	12.5	26.2
15	C-2	13.5	38.0	79.8
16	D-1	2.4	7.7	16.2
17	E-1	10.4	35.0	72.6
18	E-2	1.6	6.3	13.0

DRAINAGE LEGEND:

GENERAL FLOW DIRECTION FLOW

BASIN LIMITS

A = BASIN DESIGNATION
B = AREA IN ACRES
C = PERCENT IMPERVIOUSNESS

DESIGN POINT

CITY AND COUNTY OF DENVER
Development Services
Site Engineering
DS Project NO. PR-2011-065 (2011-0177)
PROJECT NAME: SAFEWAY DISTRIBUTION CENTER

DESIGNED BY	DATE	DATE ISSUED:	DRAWING NO.
DAP	10-24-10	09-28-11	D1.0
DRAWN BY	DATE		
DAP	10-24-10		
CHECKED BY	DATE	SHEET_1_OF_2_SHEETS	
AEH	09-26-11		

PREPARED UNDER THE SUPERVISION OF
TAIT & ASSOCIATES, INC.

ALEX HOIME, PE 41703 DATE

COLORADO LICENSED ALEX HOIME 41703 PROFESSIONAL ENGINEER

CALL UTILITY NOTIFICATION CENTER OF COLORADO
1-800-922-1987
CALL 2 BUSINESS DAYS IN ADVANCE BEFORE YOU DIG, GRADE, OR EXCAVATE FOR THE MARKING OF UNDERGROUND MEMBER UTILITIES

ENGINEERS NOTE TO CONTRACTOR:

THE EXISTENCE AND LOCATION OF ANY UNDERGROUND UTILITIES, PIPES, AND/OR STRUCTURES SHOWN ON THESE PLANS WERE OBTAINED BY A SEARCH OF AVAILABLE RECORDS. TO THE BEST OF OUR KNOWLEDGE, THERE ARE NO EXISTING UTILITIES EXCEPT AS SHOWN ON THESE PLANS. THE CONTRACTOR SHALL ASCERTAIN THE TRUE VERTICAL AND HORIZONTAL LOCATION OF THOSE UNDERGROUND UTILITIES TO BE USED AND SHALL BE RESPONSIBLE FOR ANY DAMAGE TO ANY PUBLIC OR PRIVATE UTILITIES, SHOWN OR NOT SHOWN HEREON.

BASIS OF BEARINGS:

BEARINGS BASED ON THE NORTH LINE OF LOT 3 AS NORTH 88°03'20" EAST BETWEEN MONUMENTS SHOWN ON THE TOPOGRAPHIC SURVEY.

BENCH MARK

MARTIN/MARTIN ENGINEERING PROJECT BENCHMARK, USGS DISK STAMPED Y259 (LAT 33°46'33", LONG 104°55'49") ELEVATION 5257.26 (NGVD 29 5257.37 RECORD)

NO.	DESCRIPTION	BY	DATE
	REVISIONS		

TAIT & ASSOCIATES, INC.
6163 EAST COUNTY ROAD 16
LOVELAND, CO 80537
(970) 613-1447 TEL
(970) 613-1897 FAX
www.tait.com

TAIT

DRAINAGE PLAN

NORTH EMPLOYEE AND VISITOR PARKING AREA
SWC I-70 AND DAHLIA STREET ,DENVER, CO
SAFEWAY INC.

DRAWN: DAP
DATE: 03-16-11
CHECKED: AEH
DATE: 08-17-11
REVISION # 2
DATE: 08-16-11
JOB NO: CO1176F

D1.0

CITY OF DENVER APPROVAL SET - 09/28/11

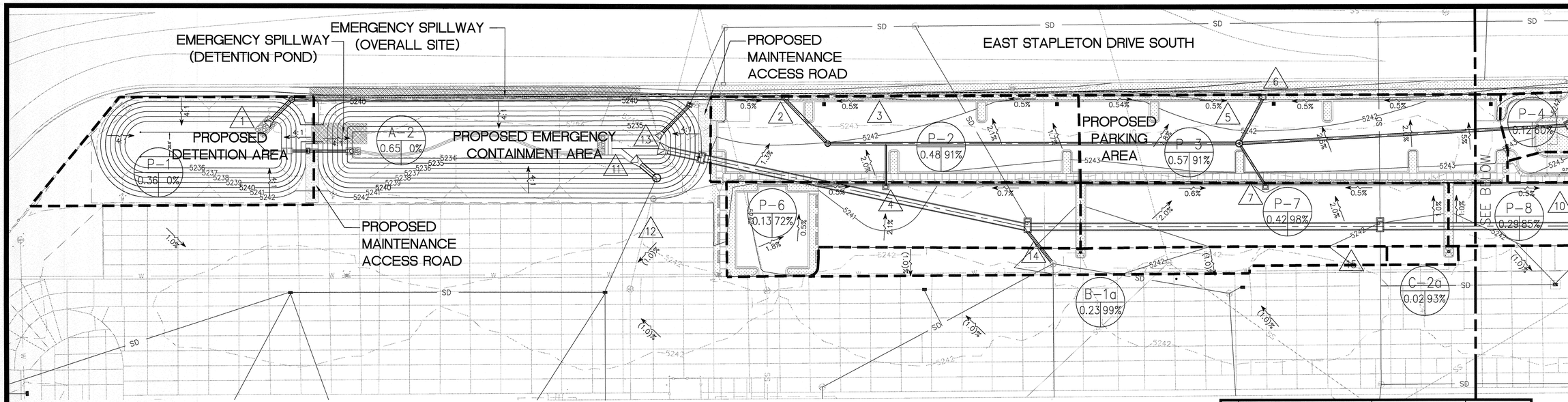

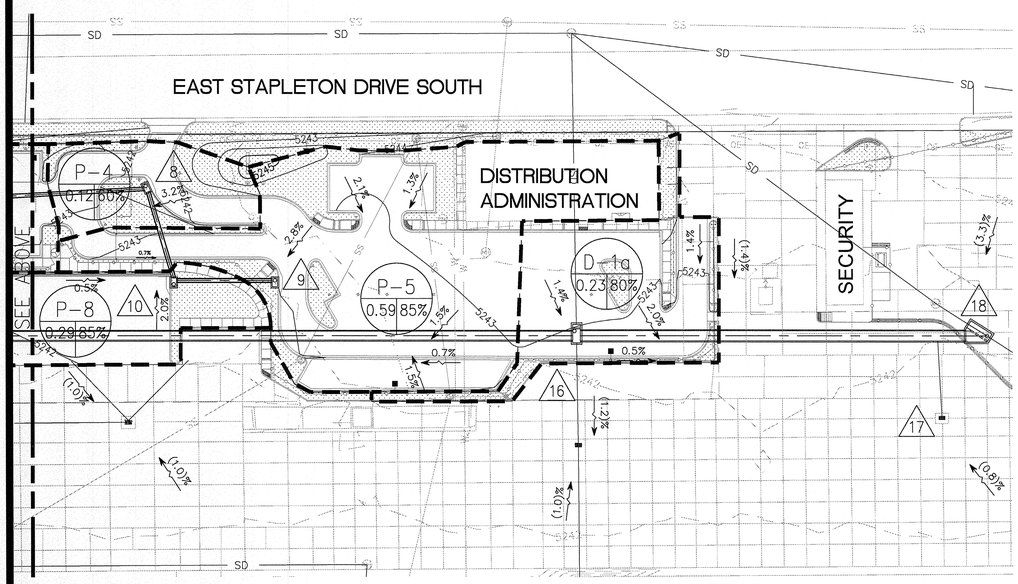

DRAINAGE LEGEND:

GENERAL FLOW DIRECTION — FLOW

BASIN LIMITS

A = BASIN DESIGNATION
B = AREA IN ACRES
C = PERCENT IMPERVIOUSNESS

DESIGN POINT

0 40 60 80
(IN FEET)
1 INCH = 40 FEET

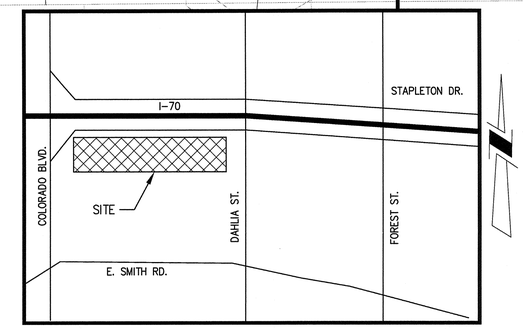

VICINITY MAP
1"=1000'

DETENTION BASIN SUMMARY TABLE

	WATER SURFACE ELEVATION (FEET)	VOLUME (ACRE-FT)	RELEASE RATE (CFS)
WATER QUALITY CAPTURE VOLUME	5236.67	0.08	---
10-YR + WATER QUALITY CAPTURE VOLUME	5238.35	0.34	0.91
100-YR + 1/2 WATER QUALITY CAPTURE VOLUME	5239.34	0.54	3.04

NOTE: SITE IS LOCATED IN A ZONE X FLOODPLAIN

LEGEND

- 5245 EXISTING MAJOR CONTOUR
- 5244 EXISTING MINOR CONTOUR
- EXISTING CHAIN LINK FENCE
- SS EXISTING SANITARY SEWER
- W EXISTING WATERLINE
- SD EXISTING STORM SEWER
- OE EXISTING OVERHEAD ELECTRIC
- EXISTING STORM MANHOLE
- EXISTING UTILITY POLE
- EXISTING BOLLARD
- EXISTING LIGHT POLE
- EXISTING FIRE HYDRANT
- 5245 PROPOSED MAJOR CONTOUR
- 5244 PROPOSED MINOR CONTOUR
- PROPOSED CHAIN LINK FENCE
- SS PROPOSED SANITARY SEWER
- PROPOSED STORM DRAIN
- PROPOSED MANHOLE
- PROPOSED TURNSTILE
- PROPOSED CONCRETE BARRIER
- PROPOSED BOLLARD
- PROPOSED FIRE HYDRANT
- PROPOSED LIGHT POLE

PROPOSED BASIN TABLE:

DESIGN POINT	CONTRIBUTING BASIN	BASIN SIZE (acres)	5-YR RUNOFF (cfs)	100-YR RUNOFF (cfs)
1	P-1	0.36	0.19	1.19
2	P-2	0.48	1.73	3.66
6	P-3	0.57	2.12	4.49
8	P-4	0.12	0.31	0.78
9	P-5	0.58	1.81	3.95
4	P-6	0.40	1.50	3.18
7	P-7	0.36	1.46	3.01
10	P-8	0.17	0.59	1.30
11	A-2	0.65	0.40	2.59
14	B-1b	0.23	0.93	1.91
15	C-2a	0.02	0.08	0.17
16	D-1a	0.23	0.72	1.59

CITY AND COUNTY OF DENVER
Development Services
Site Engineering

DS Project NO. PR-2011-065 (2011-0177)

PROJECT NAME: SAFEWAY DISTRIBUTION CENTER

DESIGNED BY DAP	DATE 10-24-10	DATE ISSUED: 09-28-11	DRAWING NO.
DRAWN BY DAP	DATE 10-24-10		D1.1
CHECKED BY AEH	DATE 09-28-11	SHEET 2 OF 2 SHEETS	

PREPARED UNDER THE SUPERVISION OF
TAIT & ASSOCIATES, INC.

ALEX HOIME, PE 41703 — DATE 9-28-11

COLORADO LICENSED ALEX HOIME 41703 PROFESSIONAL ENGINEER

CALL UTILITY NOTIFICATION CENTER OF COLORADO

1-800-922-1987

CALL 2 BUSINESS DAYS IN ADVANCE BEFORE YOU DIG, GRADE, OR EXCAVATE FOR THE MARKING OF UNDERGROUND MEMBER UTILITIES

ENGINEERS NOTE TO CONTRACTOR:

THE EXISTENCE AND LOCATION OF ANY UNDERGROUND UTILITIES, PIPES, AND/OR STRUCTURES SHOWN ON THESE PLANS WERE OBTAINED BY A SEARCH OF AVAILABLE RECORDS. TO THE BEST OF OUR KNOWLEDGE, THERE ARE NO EXISTING UTILITIES EXCEPT AS SHOWN ON THESE PLANS. THE CONTRACTOR SHALL ASCERTAIN THE TRUE VERTICAL AND HORIZONTAL LOCATION OF THOSE UNDERGROUND UTILITIES TO BE USED AND SHALL BE RESPONSIBLE FOR ANY DAMAGE TO ANY PUBLIC OR PRIVATE UTILITIES, SHOWN OR NOT SHOWN HEREON.

BASIS OF BEARINGS:

BEARINGS BASED ON THE NORTH LINE OF LOT 3 AS NORTH 88°03'20" EAST BETWEEN MONUMENTS SHOWN ON THE TOPOGRAPHIC SURVEY.

BENCH MARK

MARTIN/MARTIN ENGINEERING PROJECT BENCHMARK, USGS DISK STAMPED Y259 (LAT 33°46'33", LONG 104°55'49") ELEVATION 5257.26 (NGVD 29 5257.37 RECORD)

NO.	DESCRIPTION	BY	DATE

REVISIONS

TAIT & ASSOCIATES, INC.
6163 EAST COUNTY ROAD 16
LOVELAND, CO 80537
(970) 613-1447 TEL
(970) 613-1897 FAX
www.tait.com

TAIT

DRAINAGE PLAN
NORTH EMPLOYEE AND VISITOR PARKING AREA
SWC I-70 AND DAHLIA STREET, DENVER, CO
SAFEWAY INC.

DRAWN: DAP
DATE: 03-16-11
CHECKED: AEH
DATE: 08-17-11
REVISION #: 2
DATE: 08-16-11
JOB NO: CO1176F

D1.1

CITY OF DENVER APPROVAL SET - 09/28/11