1.0 SOURCES OF INFORMATION

1.1 Tunnel Alignments

The following files provided by Parsons were used to estimate tunnel quantities as described:

Alignment identification and length of tunnels:

- I-70 TR Tunnel Design Matrix.xls (1/25/2014)

Plan location of tunnel, stationing of portals, length and location of cross passages;

- I-70 Seg 3 EJMT Plan Alt01.pdf (1/30/2014)
- I-70 Seg 3 EJMT Plan Alt02.pdf (1/30/2014)
- I-70 Seg 3 EJMT Plan Alt03 and Alt04.pdf (1/30/2014)
- I-70 Seg 3 EJMT Plan Alt05.pdf (1/30/2014)
- I-70 Seg 6 Hidden Valley Tunnels 1.pdf (1/30/2014)
- I-70 Seg 6 Hidden Valley Tunnel 2.pdf (1/30/2014)
- I-70 Seg 6 Twin Tunnel Plan Alt01.pdf (1/30/2014)
- I-70 Seg 6 Twin Tunnel Plan Alt02.pdf (1/30/2014)

Tunnel Cross Sections

- 2014-01-15 Draft of Tunnel Sections.pdf (1/17/2014)

Portal Cut Height

- Hidden Valley Tunnel 2: A4_O2_S6_TUNNEL_1_XSECTION_LETTER (12/20/2013)
- Hidden Valley Tunnels 1A4_O2_S6_TUNNEL_2_XSECTION_LETTER (12/20/2013)
- Alt01 (2 lanes): I-70 Seg 3 TwinTunnel XSections (11/25/2013)
- Alt02 (3 lanes): I-70 Seg 3 TwinTunnel Xsections(1) (12/18/2013)
- Alt01 and Alt05 (2 lanes): I-70 Seg 3 EJMT XSections (12/5/2013)
- Alt02, Alt03, and Alt04 (3 lanes): I-70 Alt02 Seg 3 EJMT XSections (12/18/2013)

1.2 Ground Conditions

Twin Tunnels

- Yeh & Associates, Inc., 2012, Draft Final Geotechnical Data Report, CDOT I-70 Twin Tunnels Widening Project, December 7, 2012.

- Yeh & Associates, Inc., 2012, Draft Geotechnical Baseline Report Package 2, I-70 Twin Tunnels Widening Project, December 20, 2012.

Hidden Valley Tunnels 1 and Tunnels 2

To our knowledge, existing geologic information in this area is limited to published geologic maps. Due to the close proximity of these tunnels to the Twin Tunnels, ground conditions from that project site were considered applicable to this location as well.

EJMT

- Hopper, R.C., Lang, T.A., and A.A. Mathews, 1972, Construction of Straight Creek Tunnel, Colorado, RETC Proceedings Volume 1, 1972.
- Adams, J.W., 1978, Lessons Learned at Eisenhower Memorial Tunnel, Tunnels and Tunneling, May 1878.
- Colorado Department of Highways, 1954, Plan and Profile of Proposed Federal Aid Project No. I-70-3(2)251-Unit 2, State Highway No. 2, November 11, 1954.

1.3 Unit Costs

Bid tabs from the following tunnel projects were reviewed for unit costs:

- Caltrans, 2006, Bid Summary for Devil's Slide Tunnel, Contract Number 04-1123U4, November 15, 2006.
- Caltrans, 2009, Bid Summary for Caldecott #4 Tunnel, Contract Number 04-294914, September 29, 2006.
- CDOT, 2013, Bid Summary for Twin Tunnels Widening, Contract Number C19036, February 26, 2013.

1.4 Existing Tunnel Projects

- Published literature from both the Eisenhower and Johnson tunnels

- Published literature for the Devil's Slide Bypass Tunnel on SR-1 and the Caldecott 4th Bore, both in central California

2.0 ASSUMPTIONS

2.1 Tunnel Lengths

- Final Level 1 plan layouts of each tunnel alternative were provided by Parsons (dated 1/30/2014). Cross sections along each tunnel alternative were provided earlier in the project (11/25/2013, 12/5/2013, 12/15/13 and 12/20/2013), and were not updated to reflect the final Level 1 design. According to Parsons, the cross sections did not change significantly with respect to tunneling, therefore these November and December drawings were utilized to estimate quantities.

2.2 Cross Passages

- Thirteen cross passages were shown on the EMJT tunnel plans. The length of each cross passage was estimated from the plan sheet.

- For the other tunnel alternatives, cross passages were assumed to be required every 800 feet. The cross passages will connect each tunnel to the adjacent tunnel [Twin Tunnels, Hidden Valley (1)] or will exit the side slope of the hill [Hidden Valley (2)].

- Cross passage excavated width was assumed to be 15 feet.

2.3 Portals

- The area of the face of the rock cut required at each portal location was estimated using the cross sections provided by Parsons as referenced. We assumed a vertical cut face, and approximated the area as a triangle.

- We assumed there will be 30 feet between the side of the tunnel and the excavated rock slope.

- Rock slope protection (shotcrete) around the portal was assumed to extend 30 feet above the portal and 30 feet to each side of the portal. The height of each tunnel was considered to be 36 feet. The volume of shotcrete was based on an 8-inch thick layer.

- Pattern rock bolting along the sides and across the brow of the portal was assumed using a spacing of 5 feet center to center. Six rows of rock bolts were assumed. Rock bolt length was 20 feet.

- Anchored wire mesh was assumed to extend from the top of the cut slope down to the top of the shotcrete facing above the portal.

Ground Support Types

We developed 5 ground types based on our evaluation of existing EJMT reports:

- GT-1: massive rock. Equivalent to Devil's Slide Cat 1 ground, Twin Tunnels TT-1 ground, and EJMT Roc Class I.
- GT-2: blocky ground. Equivalent to Devil's Slide Cat 3 ground, Twin Tunnels TT-2 ground, and EJMT Rock Class II.
- GT-3: highly blocky and seamy. Equivalent to Devil's Slide Cat 4 ground, Twin Tunnels TT-3 ground, and EJMT Rock Class III.
- GT-4: crushed, altered to plastic ground. Equivalent to Devil's Slide Cat 5 ground and EJMT Rock Class IVa.
- GT-5: crushed, altered to plastic, squeezing. Equivalent to Devil's Slide Cat 5 ground x 1.5 and EJMT Rock Class IVb.

The excavation sequence and support requirements for each ground type were assumed to be as follows:

- GT-1: Top heading and bench with shotcrete, spot rock bolt support
- GT-2: Top heading and bench with lattice girders, shotcrete, pattern rock bolt support
- GT-3: Excavated in 4 quadrants with left and right half of tunnel and top heading and bench, with lattice girders, shotcrete, grouted spiling, pattern rock bolt support.
- GT-4: Left and right sidewalls, top heading and bench, lattice girders, pipe canopy, shotcrete on face and walls,
- GT-5: Stacked drifts constructed by sequential excavation method (top heading and bench) around perimeter, backfilled with concrete with minimum 8 ft of direct drift to drift contact. May also be excavated 12 to 15 ft oval digger shield and "junk" concrete segments.

Our cost estimates are for initial construction related support only. The support systems for the various ground types and for the various tunnel sizes should be sufficient to reinforce the rock mass around the tunnel perimeter and support the rock mass for the long term. However, these support systems are not sufficient for maintaining a dry tunnel, nor do they include sufficiently smooth surfaces for architectural treatments, efficient lighting, ventilation, and highway pavement construction. It is anticipated that a final cast in place concrete liner will be placed around the tunnel perimeter and floor to support a waterproof membrane, up to 500 feet of groundwater loading, and all of the fixtures and utilities necessary for operating highway tunnels.

2.4 Ground Conditions at Each Tunnel Location

- EJMT: Existing EJMT reports were reviewed in terms of ground conditions and support categories. Each of the rock classes (1a, 1b, IIa, IIb, IIIa, IIIb, Iva, and IVb) was converted to one of the S&W ground types.

- Twin Tunnels: The geotechnical report and GBR prepared by Yeh & Associates for the twin tunnels widening project were reviewed for an understanding of ground conditions. We simplified the ground categories to TT-1, TT-2, and TT-3, eliminating the TT-2S and TTP ground types which comprised 15 percent of the total length of tunnel. That percentage was evenly distributed across the remaining three ground types to result in the following distribution: 68 percent TT-1 (or GT-1), 18 percent TT-2 (or GT-2), and 14 percent TT-3 (or GT-3). These percentages were used to estimate the length of each ground type for the new twin tunnel bore.

- Hidden Valley Tunnels 1 and 2: We are not aware of any specific geological investigations that have been performed in this location that would provide information on ground conditions for tunneling. Due to the close proximity to the Twin Tunnels, we extrapolated ground conditions from that project. Having no specific knowledge of faulting or shear zones along the new tunnel alignments, we assumed that GT-1, GT-2 and GT-3 ground will be encountered, utilizing the same percentages as derived for the Twin Tunnels.

- Cross Passages: We have assumed that cross passages will only be constructed in type GT-4 ground, due to the damage and disturbance to the rock resulting from construction of the adjacent tunnels. We have assumed that the spacing and location of the cross passages can be adjusted as needed to avoid type GT-5 ground.

Unit Prices

- Primarily relied upon bid tab costs from Devil's Slide Tunnel on SR-1 along the California coast, using an average of the two bids received on the project and the engineer's estimate. This tunnel was completed within the last 2 years through granitic and hard sedimentary rock containing several faults. Excavation and support was accomplished using the Sequential Excavation Method (SEM).

- Tunnel unit prices per LF of tunnel were converted into equivalent costs per volume of tunnel excavated.

- Escalated past construction costs to 2014 values using the award cost index in Means (Means 2014, Heavy Construction, p 571).

- Unit costs provided included excavation and initial support of tunnels and cross passages and rock support at the portals. Costs for final lining, ventilation, lighting, and other mechanical and electrical or systems components of the tunnel were not included. Portal costs did not include excavation of the approaches or of the portal face itself, portal canopies or structures, or other system components.

Tunnel Cost Estimate Summary

Tunnel Name	Lanes	Tunnel Width (ft)	Unit	Quantity	Unit Cost	Alt01_Opt01 Extended Cost
Twin Tunnels - New Bore	2	51	LF	1300	$35,833	$46,583,103
Twin Tunnels - Cross Passages	---	---	LS	1	$1,316,890	$1,316,890
Hidden Valley Tunnels (1) (EB & WB)			LF	---	---	---
Hidden Valley Tunnels (1) Cross Passages	---	---	LS	---	---	---
Hidden Valley Tunnel (2) (WB)			LF	---	---	---
Hidden Valley Tunnel (2) Cross Passages	---	---	LS	---	---	---
EJMT North Bore	2	51	LF	8700	$57,446	$499,784,413
EJMT Cross Passages	---	---	LS	1	$24,189,190	$24,189,190

Tunnel Name	Lanes	Tunnel Width (ft)	Unit	Quantity	Unit Cost	Alt01_Opt02 Extended Cost
Twin Tunnels - New Bore	2	51	LF	1300	$35,833	$46,583,103
Twin Tunnels - Cross Passages	---	---	LS	1	$1,316,890	$1,316,890
Hidden Valley Tunnels (1) (EB & WB)	---	---	LF	---	---	---
Hidden Valley Tunnels (1) Cross Passages	---	---	LS	---	---	---
Hidden Valley Tunnel (2) (WB)	---	---	LF	---	---	---
Hidden Valley Tunnel (2) Cross Passages	---	---	LS	---	---	---
EJMT North Bore	2	51	LF	8700	$57,446	$499,784,413
EJMT Cross Passages	---	---	LS	1	$24,189,190	$24,189,190

Tunnel Cost Estimate Summary

Tunnel Name	Lanes	Tunnel Width (ft)	Unit	Quantity	Unit Cost	Alt02_Opt01 Extended Cost
Twin Tunnels - New Bore	3	63	LF	1650	$44,752	$73,840,809
Twin Tunnels - Cross Passages	---	---	LS	1	$1,663,440	$1,663,440
Hidden Valley Tunnels (1) (EB & WB)	---	---	LF	---	---	---
Hidden Valley Tunnels (1) Cross Passages	---	---	LS	---	---	---
Hidden Valley Tunnel (2) (WB)	---	---	LF	---	---	---
Hidden Valley Tunnel (2) Cross Passages	---	---	LS	---	---	---
EJMT North Bore	3	63	LF	8700	$72,363	$629,556,375
EJMT Cross Passages	---	---	LS	1	$24,119,880	$24,119,880

Tunnel Name	Lanes	Tunnel Width (ft)	Unit	Quantity	Unit Cost	Alt02_Opt02 Extended Cost
Twin Tunnels - New Bore	3	63	LF	1650	$44,752	$73,840,809
Twin Tunnels - Cross Passages	---	---	LS	1	$1,663,440	$1,663,440
Hidden Valley Tunnels (1) (EB & WB)	---	---	LF	---	---	---
Hidden Valley Tunnels (1) Cross Passages	---	---	LS	---	---	---
Hidden Valley Tunnel (2) (WB)	---	---	LF	---	---	---
Hidden Valley Tunnel (2) Cross Passages	---	---	LS	---	---	---
EJMT North Bore	3	63	LF	8700	$72,363	$629,556,375
EJMT Cross Passages	---	---	LS	1	$24,119,880	$24,119,880

Tunnel Cost Estimate Summary

Tunnel Name	Lanes	Tunnel Width (ft)	Unit	Quantity	Unit Cost	Alt02_Opt03 Extended Cost
Twin Tunnels - New Bore	3	63	LF	1650	$44,752	$73,840,809
Twin Tunnels - Cross Passages	---	---	LS	1	$1,663,440	$1,663,440
Hidden Valley Tunnels (1) (EB & WB)	---	---	LF	---	---	---
Hidden Valley Tunnels (1) Cross Passages	---	---	LS	---	---	---
Hidden Valley Tunnel (2) (WB)	---	---	LF	---	---	---
Hidden Valley Tunnel (2) Cross Passages	---	---	LS	---	---	---
EJMT North Bore	3	63	LF	8700	$72,363	$629,556,375
EJMT Cross Passages	---	---	LS	1	$24,119,880	$24,119,880

Tunnel Name	Lanes	Tunnel Width (ft)	Unit	Quantity	Unit Cost	Alt03_Opt01 Extended Cost
Twin Tunnels - New Bore	---	---	LF	---	---	---
Twin Tunnels - Cross Passages	---	---	LS	---	---	---
Hidden Valley Tunnels (1) (EB & WB)	---	---	LF	---	---	---
Hidden Valley Tunnels (1) Cross Passages	---	---	LS	---	---	---
Hidden Valley Tunnel (2) (WB)	---	---	LF	---	---	---
Hidden Valley Tunnel (2) Cross Passages	---	---	LS	---	---	---
EJMT North Bore	3	67	LF	8700	$79,628	$692,763,778
EJMT Cross Passages	---	---	LS	1	$24,119,880	$24,119,880

Tunnel Cost Estimate Summary

Tunnel Name	Lanes	Tunnel Width (ft)	Unit	Quantity	Unit Cost	Alt03_Opt02 Extended Cost
Twin Tunnels - New Bore	---	---	LF	---	---	---
Twin Tunnels - Cross Passages	---	---	LS	---	---	---
Hidden Valley Tunnels (1) (WB)	4	79	LF	1070	$56,838	$60,816,207
Hidden Valley Tunnels (1) Cross Passages	---	---	LS	1	$69,310	$69,310
Hidden Valley Tunnels (1) (EB)	3	67	LF	980	$49,113	$48,182,731
Hidden Valley Tunnel (2) (WB)	4	79	LF	1650	$57,127	$94,259,186
Hidden Valley Tunnel (2) Cross Passages	---	---	LS	1	$3,950,670	$3,950,670
EJMT North Bore	3	67	LF	8700	$79,628	$692,763,778
EJMT Cross Passages	---	---	LS	1	$24,119,880	$24,119,880

Tunnel Name	Lanes	Tunnel Width (ft)	Unit	Quantity	Unit Cost	Alt03_Opt03 Extended Cost
Twin Tunnels - New Bore	--	---	LF	---	---	---
Twin Tunnels - Cross Passages	---	---	LS	---	---	---
Hidden Valley Tunnels (1) (EB & WB)	---	---	LF	---	---	---
Hidden Valley Tunnels (1) Cross Passages	---	---	LS	---	---	---
Hidden Valley Tunnel (2) (WB)	---	---	LF	---	---	---
Hidden Valley Tunnel (2) Cross Passages	---	---	LS	---	---	---
EJMT North Bore	---	---	LF	---	---	---
EJMT Cross Passages	---	---	LS	---	---	---

Tunnel Cost Estimate Summary

Tunnel Name	Lanes	Tunnel Width (ft)	Unit	Quantity	Unit Cost	Alt03_Opt04 Extended Cost
Twin Tunnels - New Bore	---	---	LF	---	---	---
Twin Tunnels - Cross Passages	---	---	LS	---	---	---
Hidden Valley Tunnels (1) (WB)	4	79	LF	1070	$56,838	$60,816,207
Hidden Valley Tunnels (1) Cross Passages	---	---	LS	1	$69,310	$69,310
Hidden Valley Tunnels (1) (EB)	3	67	LF	980	$49,113	$48,182,731
Hidden Valley Tunnel (2) (WB)	4	79	LF	1650	$57,127	$94,259,186
Hidden Valley Tunnel (2) Cross Passages	---	---	LS	1	$3,950,670	$3,950,670
EJMT North Bore	---	---	LF	---	---	---
EJMT Cross Passages	---	---	LS	---	---	---

Tunnel Name	Lanes	Tunnel Width (ft)	Unit	Quantity	Unit Cost	Alt04_Opt01 Extended Cost
Twin Tunnels - New Bore	---	---	LF	---	---	---
Twin Tunnels - Cross Passages	---	---	LS	---	---	---
Hidden Valley Tunnels (1) (EB & WB)	---	---	LF	---	---	---
Hidden Valley Tunnels (1) Cross Passages	---	---	LS	---	---	---
Hidden Valley Tunnel (2) (WB)	---	---	LF	---	---	---
Hidden Valley Tunnel (2) Cross Passages	---	---	LS	---	---	---
EJMT North Bore	3	67	LF	8700	$79,628	$692,763,778
EJMT Cross Passages	---	---	LS	1	$24,119,880	$24,119,880

Tunnel Cost Estimate Summary

Tunnel Name	Lanes	Tunnel Width (ft)	Unit	Quantity	Unit Cost	Alt04_Opt02 Extended Cost
Twin Tunnels - New Bore	---	---	LF	---	---	---
Twin Tunnels - Cross Passages	---	---	LS	---	---	---
Hidden Valley Tunnels (1) (WB)	4	79	LF	1070	$56,838	$60,816,207
Hidden Valley Tunnels (1) Cross Passages	---	---	LS	1	$69,310	$69,310
Hidden Valley Tunnels (1) (EB)	3	67	LF	980	$49,113	$48,182,731
Hidden Valley Tunnel (2) (WB)	4	79	LF	1650	$57,127	$94,259,186
Hidden Valley Tunnel (2) Cross Passages	---	---	LS	1	$3,950,670	$3,950,670
EJMT North Bore	3	67	LF	8700	$79,628	$692,763,778
EJMT Cross Passages	---	---	LS	1	$24,119,880	$24,119,880

Tunnel Name	Lanes	Tunnel Width (ft)	Unit	Quantity	Unit Cost	Alt05_Opt01 Extended Cost
Twin Tunnels - New Bore	---	---	LF	---	---	---
Twin Tunnels - Cross Passages	---	---	LS	---	---	---
Hidden Valley Tunnels (1) (EB & WB)	---	---	LF	---	---	---
Hidden Valley Tunnels (1) Cross Passages	---	---	LS	---	---	---
Hidden Valley Tunnel (2) (WB)	---	---	LF	---	---	---
Hidden Valley Tunnel (2) Cross Passages	---	---	LS	---	---	---
EJMT North Bore	2	59	LF	8700	$65,604	$570,755,154
EJMT Cross Passages	---	---	LS	1	$24,189,190	$24,189,190

Tunnel Cost Estimate Summary

Tunnel Name	Lanes	Tunnel Width (ft)	Unit	Quantity	Unit Cost	Alt06_Opt01 Extended Cost
Twin Tunnels - New Bore	---	---	LF	---	---	---
Twin Tunnels - Cross Passages	---	---	LS	---	---	---
Hidden Valley Tunnels (1) (EB & WB)	---	---	LF	---	---	---
Hidden Valley Tunnels (1) Cross Passages	---	---	LS	---	---	---
Hidden Valley Tunnel (2) (WB)	---	---	LF	---	---	---
Hidden Valley Tunnel (2) Cross Passages	---	---	LS	---	---	---
EJMT North Bore	---	---	LF	---	---	---
EJMT Cross Passages	---	---	LS	---	---	---

Tunnel Cost Ranges

Tunnel Name	Alternatives and Options	Number of Lanes	Finished Tunnel Width (feet)	Base Tunnel Cost	Lower Costs		Higher Costs		Probability		
					Percentage Reduction	Lower Tunnel Cost	Percentage Increase	Higher Tunnel Cost	Lower Cost	Base Cost	Higher Cost
Twin Tunnels - New Bore	Alt01_Opt01 and Alt01_Opt02	2	51	$46,582,900	-20%	$37,266,320	20%	$55,899,480	10%	80%	10%
	Alt02_Opt01, Alt02_Opt02, and Alt02_Opt03	3	63	$73,840,800	-20%	$59,072,640	20%	$88,608,960	10%	80%	10%
Hidden Valley Tunnels (1) (EB&WB)	Alt03_Opt02, Alt03_Opt04, and Alt04_Opt02 (WB)	4	79	$60,816,660	-25%	$45,612,495	25%	$76,020,825	60%	20%	20%
	Alt03_Opt02, Alt03_Opt04, and Alt04_Opt02 (EB)	3	67	$48,130,740	-25%	$36,098,055	25%	$60,163,425	60%	20%	20%
Hidden Valley Tunnel (2) (WB)	Alt03_Opt02, Alt03_Opt04, and Alt04_Opt02 (WB)	4	79	$94,259,550	-25%	$70,694,663	25%	$117,824,438	60%	20%	20%
EJMT North Bore	Alt01_Opt01 and Alt01_Opt02	2	51	$499,780,200	-10%	$449,802,180	15%	$574,747,230	10%	50%	40%
	Alt02_Opt01, Alt02_Opt02, and Alt02_Opt03	3	63	$629,558,100	-10%	$566,602,290	15%	$723,991,815	10%	50%	40%
	Alt03_Opt01, Alt03_Opt02, Alt04_Opt01, and Alt04_Opt02	3	67	$692,763,600	-18%	$566,602,290	10%	$762,039,960	70%	20%	10%
	Alt05_Opt01	2	59	$570,754,800	-10%	$513,679,320	15%	$656,368,020	10%	50%	40%

Tunnel Name	Alternatives and Options	Number of Lanes	Tunnel Width (feet)	Base Cross Passage Cost LS	Lower Costs		Higher Costs		Probability		
					Reduction	Lower Passage Cost	Percentage Increase	Higher Passage Cost	Lower Cost	Base Cost	Higher Cost
Twin Tunnels - New Bore	Alt01_Opt01 and Alt01_Opt02	2	51	$1,316,890	-20%	$1,053,512	20%	$1,580,268	10%	80%	10%
	Alt02_Opt01, Alt02_Opt02, and Alt02_Opt03	3	63	$1,663,440	-20%	$1,330,752	20%	$1,996,128	10%	80%	10%
Hidden Valley Tunnels (1) (EB&WB)	Alt03_Opt02, Alt03_Opt04, and Alt04_Opt02 (WB)	4	79	$69,310	0%	$69,310	600%	$485,170	0%	20%	80%
Hidden Valley Tunnel (2) (WB)	Alt03_Opt02, Alt03_Opt04, and Alt04_Opt02 (WB)	4	79	$3,950,370	-10%	$3,555,333	10%	$4,345,407	20%	80%	20%
EJMT North Bore	Alt01_Opt01 and Alt01_Opt02	2	51	$24,189,190	-30%	$16,932,433	5%	$25,398,650	70%	20%	10%
	Alt02_Opt01, Alt02_Opt02, and Alt02_Opt03	3	63	$24,119,880	-30%	$16,883,916	5%	$25,325,874	70%	20%	10%
	Alt03_Opt01, Alt03_Opt02, Alt04_Opt01, and Alt04_Opt02	3	67	$24,119,880	-30%	$16,883,916	5%	$25,325,874	70%	20%	10%
	Alt05_Opt01	2	59	$24,189,190	-30%	$16,932,433	5%	$25,398,650	70%	20%	10%

Tunnel Cost Development

Tunnel Name	Alternatives and Options	Number of Lanes	Finished Tunnel Width (feet)	Excavated Tunnel Width (feet)	Cross Section Number	Tunnel Length (feet)	Length of Tunnel per Ground Support Type (feet)					Tunnel Cost	Tunnel Cost/LF
							GT-1	GT-2	GT-3	GT-4	GT-5		
Twin Tunnels - New Bore	Alt01_Opt01 and Alt01_Opt02	2	51	57	1	1300	884	234	182	0	0	$45,475,924	$34,981
	Alt02_Opt01, Alt02_Opt02, and Alt02_Opt03	3	63	70	2	1650	1122	297	231	0	0	$72,725,895	$44,076
Hidden Valley Tunnels (1) (EB&WB)	Alt03_Opt02, Alt03_Opt04, and Alt04_Opt02 (WB)	4	79	89	5	1070	727	193	150	0	0	$60,193,602	$56,256
	Alt03_Opt02, Alt03_Opt04, and Alt04_Opt02 (EB)	3	67	75	5	980	667	176	137	0	0	$47,560,125	$48,531
Hidden Valley Tunnel (2) (WB)	Alt03_Opt02, Alt03_Opt04, and Alt04_Opt02 (WB)	4	79	89	5	1650	1122	297	231	0	0	$92,863,254	$56,281
EJMT North Bore	Alt01_Opt01 and Alt01_Opt02	2	51	57	1	8700	1879	2236	2288	1801	496	$498,787,454	$57,332
	Alt02_Opt01, Alt02_Opt02, and Alt02_Opt03	3	63	70	2	8700	1879	2236	2288	1801	496	$628,471,124	$72,238
	Alt03_Opt01, Alt03_Opt02, Alt04_Opt01, and Alt04_Opt02	3	67	75	3	8700	1879	2236	2288	1801	496	$691,651,297	$79,500
	Alt05_Opt01	2	59	63	4	8700	1879	2236	2288	1801	496	$569,726,417	$65,486

Tunnel Name	Alternatives and Options	Portal A											
		Location	Cut Height (ft)	Cut Width (ft)	Total Cut Slope Area (ft^2)	Shotcrete Area (ft^2)	Shotcrete Volume (CY)	Area of Anchored Wire Mesh (ft^2)	Number of Rock Bolts	LF of Rock Bolts (ft)	Portal A Cost	Total Cost of Both Portals	Portal Cost/LF Tunnel
Twin Tunnels - New Bore	Alt01_Opt01 and Alt01_Opt02	Sta. 49+00	100	170	8500	5670	140	1989	230	4608	$623,249	$1,107,179	$852
	Alt02_Opt01, Alt02_Opt02, and Alt02_Opt03	Sta. 49+00	105	170	8925	6060	150	1950	246	4920	$663,222	$1,114,914	$676
Hidden Valley Tunnels (1) (EB&WB)	Alt03_Opt02, Alt03_Opt04, and Alt04_Opt02 (WB)	Sta. 1848+00	125	190	11875	5962	147	2803	269	5376	$694,637	$1,245,212	$1,164
	Alt03_Opt02, Alt03_Opt04, and Alt04_Opt02 (EB)	---	---	---	---	---	---	---	---	---	---	---	---
Hidden Valley Tunnel (2) (WB)	Alt03_Opt02, Alt03_Opt04, and Alt04_Opt02 (WB)	Sta. 1919+00	140	210	14700	6630	164	5513	269	5376	$775,774	$1,395,932	$846
EJMT North Bore	Alt01_Opt01 and Alt01_Opt02	Sta. 2914+00	N/A (Trapezoidal)	N/A (Trapezoidal)	9425	5670	140	468	230	4608	$600,505	$996,959	$115
	Alt02_Opt01, Alt02_Opt02, and Alt02_Opt03	Sta. 2914+00	N/A (Trapezoidal)	N/A (Trapezoidal)	12800	6060	150	1820	246	4920	$661,278	$1,085,251	$125
	Alt03_Opt01, Alt03_Opt02, Alt04_Opt01, and Alt04_Opt02	Sta. 2914+00	N/A (Trapezoidal)	N/A (Trapezoidal)	12800	6210	153	1890	252	5040	$677,923	$1,112,481	$128
	Alt05_Opt01	Sta. 2914+00	N/A (Trapezoidal)	N/A (Trapezoidal)	9425	5850	144	492	238	4752	$619,582	$1,028,737	$118

Tunnel Name	Alternatives and Options	Portal B									
		Location	Cut Height (ft)	Cut Width (ft)	Total Cut Slope Area (ft2)	Shotcrete Area (ft^2)	Shotcrete Volume (CY)	Area of Anchored Wire Mesh (ft2)	Number of Rock Bolts	LF of Rock Bolts (ft)	Portal B Cost
Twin Tunnels - New Bore	Alt01_Opt01 and Alt01_Opt02	Sta. 62+00	180	160	14400	5670	140	6669	230	4608	$483,930
	Alt02_Opt01, Alt02_Opt02, and Alt02_Opt03	Sta. 65+50	150	105	7875	5160	127	4200	246	4920	$451,692
Hidden Valley Tunnels (1) (EB&WB)	Alt03_Opt02, Alt03_Opt04, and Alt04_Opt02 (WB)	Sta. 1858+00	110	250	13750	9180	227	2750	269	5376	$550,574
	Alt03_Opt02, Alt03_Opt04, and Alt04_Opt02 (EB)	---	---	---	---	---	---	---	---	---	---
Hidden Valley Tunnel (2) (WB)	Alt03_Opt02, Alt03_Opt04, and Alt04_Opt02 (WB)	Sta. 1934+00	220	170	18700	6630	164	11473	269	5376	$620,158
EJMT North Bore	Alt01_Opt01 and Alt01_Opt02	Sta. 3001+00	80	310	12400	5670	140	819	230	4608	$396,454
	Alt02_Opt01, Alt02_Opt02, and Alt02_Opt03	Sta. 3001+00	80	330	13200	6060	150	910	246	4920	$423,974
	Alt03_Opt01, Alt03_Opt02, Alt04_Opt01, and Alt04_Opt02	Sta. 3001+00	80	330	13200	6210	153	945	252	5040	$434,558
	Alt05_Opt01	Sta. 3001+00	80	310	12400	5850	144	861	238	4752	$409,155

Tunnel Name	Alternatives and Options	Number of Lanes	Tunnel Width (feet)	Number of Cross Passages	Cross Passage Length (feet)	Length of Cross Passages per Ground Support Type (feet)				Cross Passage Cost LS
						GT-1	GT-2	GT-3	GT-4	
Twin Tunnels - New Bore	Alt01_Opt01 and Alt01_Opt02	2	51	1	190	142	48	0	0	$1,316,890
	Alt02_Opt01, Alt02_Opt02, and Alt02_Opt03	3	63	2	240	180	60	0	0	$1,663,440
Hidden Valley Tunnels (1) (EB&WB)	Alt03_Opt02, Alt03_Opt04, and Alt04_Opt02 (WB)	4	79	1	10	8	2	0	0	$69,310
	Alt03_Opt02, Alt03_Opt04, and Alt04_Opt02 (EB)	3	67	1	10	8	2	0	0	$69,310
Hidden Valley Tunnel (2) (WB)	Alt03_Opt02, Alt03_Opt04, and Alt04_Opt02 (WB)	4	79	2	570	428	142	0	0	$3,950,670
EJMT North Bore	Alt01_Opt01 and Alt01_Opt02	2	51	13	3490	1745	1745	0	0	$24,189,190
	Alt02_Opt01, Alt02_Opt02, and Alt02_Opt03	3	63	13	3480	1740	1740	0	0	$24,119,880
	Alt03_Opt01, Alt03_Opt02, Alt04_Opt01, and Alt04_Opt02	3	67	13	3480	1740	1740	0	0	$24,119,880
	Alt05_Opt01	2	59	13	3490	1745	1745	0	0	$24,189,190

	Total Tunnel and Portal Cost	Total Tunnel and Portal Cost/LF of Tunnel	Total Cross Passages	
0.0406	$46,583,103	$35,833	$1,316,890	
0.0406	$73,840,809	$44,752	$1,663,440	
0.0451	$60,816,207	$56,838	$69,310	split portal cost
	$48,182,731	$49,113	---	split portal cost
0.0405	$94,259,186	$57,127	$3,950,670	
0.0406	$499,784,413	$57,446	$24,189,190	
0.0406	$629,556,375	$72,363	$24,119,880	
0.0406	$692,763,778	$79,628	$24,119,880	
0.0406	$570,755,154	$65,604	$24,189,190	

	Total cost / Total Cut slope area ($/ft^2)	Total Cost / Net cut slope area ($/ft^2)		
	$73.32	$99.72		$60.10
	$74.31	$108.90		
	$58.50	$135.28		
	---	---		
	$52.77	$70.02		
	$63.71	$83.69		
	$51.66	$66.36		
	$52.96	$70.03		
	$65.74	$90.38		
St. Dev.	**$9.11**	**$23.59**		
Mean	**$61.62**	**$90.55**	0.14790415	0.260545176

	Total cost / Total Cut slope area ($/ft^2)	Total Cost / Net cut slope area ($/ft^2)		
	$33.61	$39.83		$35.60
	$57.36	$89.62		
	$40.04	$78.54		
	---	---		
	$33.16	$41.12		
	$31.97	$39.06		
	$32.12	$40.90		
	$32.92	$43.11		
	$33.00	$41.62		
St. Dev.	**$8.71**	**$20.22**		
Mean	**$36.77**	**$51.73**	0.23691492	0.390963504

Matrix of Tunnel Locations, Alternatives, and Options

Tunnel Name	Unit	Alt01_Opt01	Alt01_Opt02	Alt02_Opt01	Alt02_Opt02	Alt02_Opt03	Alt03_Opt01	Alt03_Opt02	Alt03_Opt03	Alt03_Opt04	Alt04_Opt01	Alt04_Opt02	Alt05_Opt01	Alt06_Opt01
Twin Tunnels - New Bore	LF						---	---	---	---	---	---	---	---
Twin Tunnels - Cross Passages	LS						---	---	---	---	---	---	---	---
Hidden Valley Tunnels (1) (EB & WB)	LF	---	---	---	---	---	---		---		---		---	---
Hidden Valley Tunnels (1) Cross Passages	LS	---	---	---	---	---	---		---		---		---	---
Hidden Valley Tunnel (2) (WB)	LF	---	---	---	---	---	---		---		---		---	---
Hidden Valley Tunnel (2) Cross Passages	LS	---	---	---	---	---	---		---		---		---	---
EJMT North Bore	LF								---	---				---
EJMT Cross Passages	LS								---	---				---

Ground Support

Cross Section Number	Number of Lanes	Finished Width (feet)	Excavated Width (feet)	Cross-Sectional Area (ft^2)	Ground Support Type Unit Cost/LF				
					GT-1	GT-2	GT-3	GT-4	GT-5
1	2	51	57	2250	$27,775	$41,631	$61,435	$83,673	$125,510
2	3	63	70	2835	$34,996	$52,455	$77,408	$105,428	$158,143
3	3	67	75	3120	$38,514	$57,728	$85,190	$116,027	$174,041
4	2	59	63	2570	$31,725	$47,552	$70,172	$95,574	$143,360
5	4	79	89	3620	$44,686	$66,980	$98,842		
5	3	67	75	3120	$38,514	$57,728	$85,190		
---	Cross Passages	13	15		$6,931	$6,931			

Tunnel Unit Costs per Ground Type

Tunnel	Total Length, ft	Final Inside Width, ft	Initial Lining Width, ft	Area Inside Initial Support , ft^2	Area Multiplier (New bore/Devil's slide)	GT-1 (massive), $/cu. ft/ft (from Devil's Slide Cat. 1 ground)	GT-1 $/ft	Length of tunnel in GT-1, ft	GT-1 Total $	GT-2 (mod. blocky), $/cu.ft./ft (from Devil's Slide Cat. 3 ground)	GT-2 $/ft	Length of tunnel in GT-2, ft	GT-2 Total $	GT-3 (highly blocky, seamy),$/cu.ft./ft (from Devil's Slide Cat. 4 ground)	GT-3 $/ft	Length of tunnel in GT-3, ft	GT-3 Total $	GT-4 (crushed, altered to plastic),$/cu.ft./ft (from Devil's Slide Cat. 5 ground)	GT-4 $/ft	Length of tunnel in GT-4, ft	GT-4 Total $	GT-5 (crushed, altered to plastic),$/cu.ft./ft (from Devil's Slide Cat. 5 ground X 1.5)	GT-5 $/ft	Length of tunnel in GT-5, ft	GT-5 Total $	Cross Passages $/ft (Devil's Slide Cat 4 ground)	Total Cross Passage, $	Total Cost
EJMT 3rd Bore - 8700 ft																												
2-lane reversible	8700	51	57	2250	3.760	$ 12.34	$ 27,775	1879.2	$ 52,194,138	$ 18.50	$ 41,631	2235.9	$ 93,082,600	$ 27.30	$ 61,435	2288.1	$ 140,568,903	$ 37.19	$ 83,673	1800.9	$ 150,687,374	$ 55.78	$ 125,510	495.9	$ 62,240,437	$ 6,931	$ 7,624,524.87	$ 506,397,977
3-lane reversible	8700	63	70	2835	4.738	$ 12.34	$ 34,996	1879.2	$ 65,764,614	$ 18.50	$ 52,455	2235.9	$ 117,284,075	$ 27.30	$ 77,408	2288.1	$ 177,116,817	$ 37.19	$ 105,428	1800.9	$ 189,866,092	$ 55.78	$ 158,143	495.9	$ 78,422,951	$ 6,931	$ 7,624,524.87	$ 636,079,074
3-lane	8700	67	75	3120	5.214	$ 12.34	$ 38,514	1879.2	$ 72,375,872	$ 18.50	$ 57,728	2235.9	$ 129,074,538	$ 27.30	$ 85,190	2288.1	$ 194,922,212	$ 37.19	$ 116,027	1800.9	$ 208,953,159	$ 55.78	$ 174,041	495.9	$ 86,306,740	$ 6,931	$ 7,624,524.87	$ 699,257,045
2-way 2 lane	8700	59	63	2570	4.295	$ 12.34	$ 31,725	1879.2	$ 59,617,304	$ 18.50	$ 47,552	2235.9	$ 106,321,014	$ 27.30	$ 70,172	2288.1	$ 160,560,924	$ 37.19	$ 95,574	1800.9	$ 172,118,467	$ 55.78	$ 143,360	495.9	$ 71,092,410	$ 6,931	$ 7,624,524.87	$ 577,334,645
Cross passages (assume 11 at 100 ft long ea., spaced 800 ft)	1,100		15																									
Twin Tunnel																												
2-lane reversible	1300	51	57	2250	3.760	$ 12.34	$ 27,775	884	$ 24,552,798	$ 18.50	$ 41,631	234	$ 9,741,638	$ 27.30	$ 61,435	182	$ 11,181,129									$ 6,931	$ 693,138.62	$ 46,168,703
3-lane reversible	1650	63	70	2835	4.738	$ 12.34	$ 34,996	1122	$ 39,265,590	$ 18.50	$ 52,455	297	$ 15,579,127	$ 27.30	$ 77,408	231	$ 17,881,205									$ 6,931	$ 693,138.62	$ 73,419,061
Cross Passage - 1 at 100 ft long	100		15																									
Hidden Valley																												
4-lane tunnel	1070	79	89	3620	6.049	$ 12.34	$ 44,686	727	$ 32,486,969	$ 18.50	$ 66,980	192.6	$ 12,900,260	$ 27.30	$ 98,842	149.8	$ 14,806,490									$ 6,931	$ 693,138.62	$ 60,886,857
3-lane	990	67	75	3120	5.214	$ 12.34	$ 38,514	667	$ 25,688,967	$ 18.50	$ 57,728	176.4	$ 10,183,259	$ 27.30	$ 85,190	137.2	$ 11,688,006									$ 6,931	$ 693,138.62	$ 48,253,371
Cross Passage - 1 at 100 ft long	100		15																									
SH 6																												
4-lane tunnel	1650	79	89	3620	6.049	$ 12.34	$ 44,686	1122	$ 50,138,073	$ 18.50	$ 66,980	297	$ 19,892,924	$ 27.30	$ 98,842	231	$ 22,832,438									$ 6,931	$ 693,138.62	$ 93,556,574
Cross passage 1 at 100 ft long	100		15																									

Tunnel Referenced Projects

Ref Proj.	Average Bid	Means Cost Index Muliplier to 2014		Length, ft	$/ft	initial lining internl vol., ft2	2014 cost/cu. Ft./ft of liner	Initial lining width, ft	2014 cost/diam ft/ft of liner	2014 Cost/ft of cross passage	2014 Cost/ft of cross passage/15 ft width
Devil's Slide Tunnel - 2007 - 1-lane + pulloff lane		Award cost index (Means 2014, Heavy Const., p571)	Cost 2014 - 202.7								
Total Bid Price	$ 325,460,037.00	169.4	$ 389,437,718.42	7757	$ 50,204.68	598.4	$ 83.90	34.25	$ 1,465.83		
Tunneling costs only	$ 59,321,175.00	169.4	$ 70,982,303.26	7504.8	$ 9,458.25	598.4	$ 15.81	34.25	$ 276.15		
Cat. 1 Exc. & Support	$ 12,717,000.00	169.4	$ 15,216,858.91	2060	$ 7,386.82	598.4	$ 12.34	34.25	$ 215.67		
Cat. 2 Exc & Support	$ 15,915,200.00	169.4	$ 19,043,748.76	2663.36	$ 7,150.27	598.4	$ 11.95	34.25	$ 208.77		
Cat. 3 Exc. & Support	$ 17,269,150.00	169.4	$ 20,663,853.04	1866.32	$ 11,071.98	598.4	$ 18.50	34.25	$ 323.27		
Cat. 4 Exc. & Support	$ 9,942,825.00	169.4	$ 11,897,347.27	728.16	$ 16,338.92	598.4	$ 27.30	34.25	$ 477.05		
Cat. 5 Exc. & Support	$ 3,477,000.00	169.4	$ 4,160,495.28	186.96	$ 22,253.40	598.4	$ 37.19	34.25	$ 649.73		
Cross Passages -Cat 1	$ 1,140,000.00	169.4	$ 1,364,096.81	311.6	$ 4,377.72					$ 4,377.72	$ 291.85
Cross Passages -Cat 2	$ 570,000.00	169.4	$ 682,048.41	124.64	$ 5,472.15					$ 5,472.15	$ 364.81
Cross Passages -Cat 4	$ 722,000.00	169.4	$ 863,927.98	124.64	$ 6,931.39					$ 6,931.39	$ 462.09
Caldecott Tunnel - 2010 - 2-lane + pulloff lanes											
Total Bid Price	$ 308,502,868.00	183.5	$ 340,782,187.16	3249		1248	$ 84.05	46.9	$ 2,236.42		
Ancillary Tunneling costs	$ 5,716,271.00	183.5	$ 6,314,376.74								
Cat. 1A & B Exc. & Support - blocky, slacking, top heading & bench	$ 18,787,463.00	183.5	$ 20,753,235.70	882.32		1248	$ 18.85	46.9	$ 501.52		
Cat. 2 Exc & Support - very blocky, ravelling, fair discontunuity	$ 36,375,411.00	183.5	$ 40,181,448.55	1351.36		1248	$ 23.83	46.9	$ 633.99		
Cat. 3 Exc. & Support - disintegrated to very blocky, weathered joints	$ 26,342,970.00	183.5	$ 29,099,291.66	842.96		1248	$ 27.66	46.9	$ 736.04		
Cat. 4 Exc. & Support- disintigrated, fast ravelling, shear failure,	$ 7,991,828.00	183.5	$ 8,828,030.17	170.56		1248	$ 41.47	46.9	$ 1,103.61		
Cross Passages -Cat 1 (Tun. Cat 1)	$ 1,091,737.50	183.5	$ 1,205,968.34	246						$ 4,902.31	$ 326.82
Cross Passages -Cat 2 (Tun. Cat 2 & 3a)	$ 2,850,806.00	183.5	$ 3,149,091.97	514.96						$ 6,115.22	$ 407.68
Corss Passage - Cat 3 (tun. Cat 3b)	$ 1,345,509.75	183.5	$ 1,486,293.33	127.92						$ 11,618.93	$ 774.60
Twin Tunnel I-70 - 2013 -											
Total bid price	$ 44,584,716.00										
shotcrete - av. Price/cy	$ 785.00	201.2									
rock excav. - av price/cy - 19,698 cy	$ 236.00										
Beacon Hill Tunnel											
Mt. Baker Ridge - 1982											
1332 ft of stacked drift	$38,000,000	80.2	$ 96,042,394.01	1332		3215.36	$ 22.42	64	$ 1,126.62		

Tunnel Cross Passages

Tunnel Name	Alternative/Option	Cross Passage Locations	Length of Cross Passage (ft)	Sum of Cross Passage Lengths (ft)
Twin Tunnels - New Bore	Alt01_Opt01 and Alt01_Opt02	Sta. 54+00	190	190
	Alt02_Opt01, Alt02_Opt02, and Alt02_Opt03	Sta. 54+00	180	240
		Sta. 62+00	60	
Hidden Valley Tunnels (1) (EB&WB)	Alt03_Opt02, Alt03_Opt04, and Alt04_Opt02 (WB)	Sta. 1853+00	10	10
Hidden Valley Tunnel (2) (WB)	Alt03_Opt02, Alt03_Opt04, and Alt04_Opt02 (WB)	1924+00	290	570
		1929+00	280	
EJMT North Bore	Alt01_Opt01 and Alt01_Opt02	Sta. 2920+00	360	3490
		Sta. 2926+50	410	
		Sta. 2933+00	400	
		Sta. 2939+50	350	
		Sta. 2946+00	290	
		Sta. 2952+50	240	
		Sta. 2959+00	200	
		Sta. 2965+50	180	
		Sta. 2972+00	170	
		Sta. 2978+50	160	
		Sta. 2985+00	160	
		Sta. 2991+50	230	
		Sta. 2998+00	340	
	Alt02_Opt01, Alt02_Opt02, and Alt02_Opt03	Sta. 2920+00	360	3480
		Sta. 2926+50	410	
		Sta. 2933+00	400	
		Sta. 2939+50	350	
		Sta. 2946+00	290	
		Sta. 2952+50	240	
		Sta. 2959+00	200	
		Sta. 2965+50	180	
		Sta. 2972+00	170	
		Sta. 2978+50	160	
		Sta. 2985+00	160	
		Sta. 2991+50	230	
		Sta. 2998+00	330	
	Alt03_Opt01, Alt03_Opt02, Alt04_Opt01, and Alt04_Opt02	3 lane same as Alt02		3480
	Alt05_Opt01	2 lane same as Alt01		3490

Portal Rock Support

		Unit	Caldecott Bid Prices (metric units)					Devil's Slide Bid Prices (metric units)				Twin Tunnel Bid Prices (English Units)			
			low	2nd	third	average/ metric units	average/English Unit	low	2nd	average/ metric units	average/English Unit	Engineer	low	average/English units	
rock bolts: 20 feet long, 5-foot spacing, 6 rows above the portal and to the sides		each/ft	$889	$1,500	$800	$1,063	$54								
rock slope protection: 8 inches facing applied 30 feet above and 30 feet on either side		m^3/CY	$730	$300	$140	$390	$300	$370	$70	$220	$169				not used
slope protection fabric: placed beneath facing 30 feet above and 30 feet on either side		m^2/sq ft	$24	$90	$14	$43	$4	$4	$6	$5	$0.44				
anchored wire mesh: placed from top of cut to top of shotcrete facing		m^2/sq ft	$150	$250	$80	$160	$15								
shotcrete portal brow		CY										$628	$805	$717	
shotcrete (per RAR)	2300	CY													

Rock Bolt Quantities

On the Sides

width (ft)	60	considers left and right side
spacing	5	
number of bolts per row	14	
number of rows	6	
number of bolts	84	

Above the brow

6 rows of bolts
extends the width of the tunnel + 30 feet on each side
5 foot spacing

Tunnel Lining Calculations

Tunnel Name	Near Mile Post	County	Length (Feet)	Alt01_Opt01 CY	Alt01_Opt02 CY	Alt02_Opt01 CY	Alt02_Opt02 CY	Alt02_Opt03 CY	Alt03_Opt01 CY	Alt03_Opt02 CY	Alt03_Opt03 CY	Alt03_Opt04 CY	Alt04_Opt01 CY	Alt04_Opt02 CY	Alt05_Opt01 CY	Alt06_Opt01 CY
EJMT 3rd Bore	214	Summit	8700	33,408	35,915	33,408	35,915	35,915	36,991	36,991			36,991	36,991	34,985	
Twin Tunnel 3rd Bore	242.3	Clear Creek	Alt01 - 1300', Alt02 - 1650'	4,992	5,367	6,336	6,811	6,811								
New Tunnel Near Hidden Valley (EB & WB)	242.7	Clear Creek	1070' WB, 980' EB							9,470		9,470		9,470		
New Tunnel Near SH 6	244	Clear Creek	1650							8,178		8,178		8,178		
Totals: (CY)				**38,401**	**41,281**	**39,745**	**42,726**	**42,726**	**36,991**	**54,640**	**-**	**17,648**	**36,991**	**54,640**	**34,985**	**-**
Area of tunnel lining (1' offset of typical cross section)				Area (SF)	Area (SF)	Area (SF)	Area (SF)	Area (SF)	Area (SF)	Area (SF)	Area (SF)	Area (SF)	Area (SF)	Area (SF)	Area (SF)	Area (SF)
EJMT 3rd Bore and Twin Tunnel 3rd Bore				103.68	111.46	103.68	111.46	111.46	114.80	114.80			114.80	114.80	108.57	
New Tunnel Sections WB and New tunnel near SH6										133.82		133.82		133.82		
New Tunnel Sections EB										114.80		114.80		114.80		

Tunnel Name	Near Mile Post	County	Length (Feet)	Alt01_Opt01 $	Alt01_Opt02 $	Alt02_Opt01 $	Alt02_Opt02 $	Alt02_Opt03 $	Alt03_Opt01 $	Alt03_Opt02 $	Alt03_Opt03 $	Alt03_Opt04 $	Alt04_Opt01 $	Alt04_Opt02 $	Alt05_Opt01 $	Alt06_Opt01 $
EJMT 3rd Bore	214	Summit	8700	16,704,226	17,957,332	16,704,226	17,957,332	17,957,332	18,495,701	18,495,701			18,495,701	18,495,701	17,492,301	
Twin Tunnel 3rd Bore	242.3	Clear Creek	Alt01 - 1300', Alt02 - 1650'	2,496,034	2,683,279	3,168,043	3,405,701	3,405,701								
New Tunnel Near Hidden Valley (EB & WB)	242.7	Clear Creek	1070' WB, 980' EB							4,735,080		4,735,080		4,735,080		
New Tunnel Near SH 6	244	Clear Creek	1650							4,089,003		4,089,003		4,089,003		
Totals: $				**$ 19,200,259**	**$ 20,640,611**	**$ 19,872,268**	**$ 21,363,033**	**$ 21,363,033**	**$ 18,495,701**	**$ 27,319,783**	**$ -**	**$ 8,824,082**	**$ 18,495,701**	**$ 27,319,783**	**$ 17,492,301**	**-**

PARSONS

SUBJECT I-70 MTN CORRIDOR
ALT 5 - Tunnel Ceiling
JOB NO. 647824
SHEET NO. 1 OF 4
MADE BY D. Slakey DATE 2/18/14 CHECKED BY _____ DATE _____

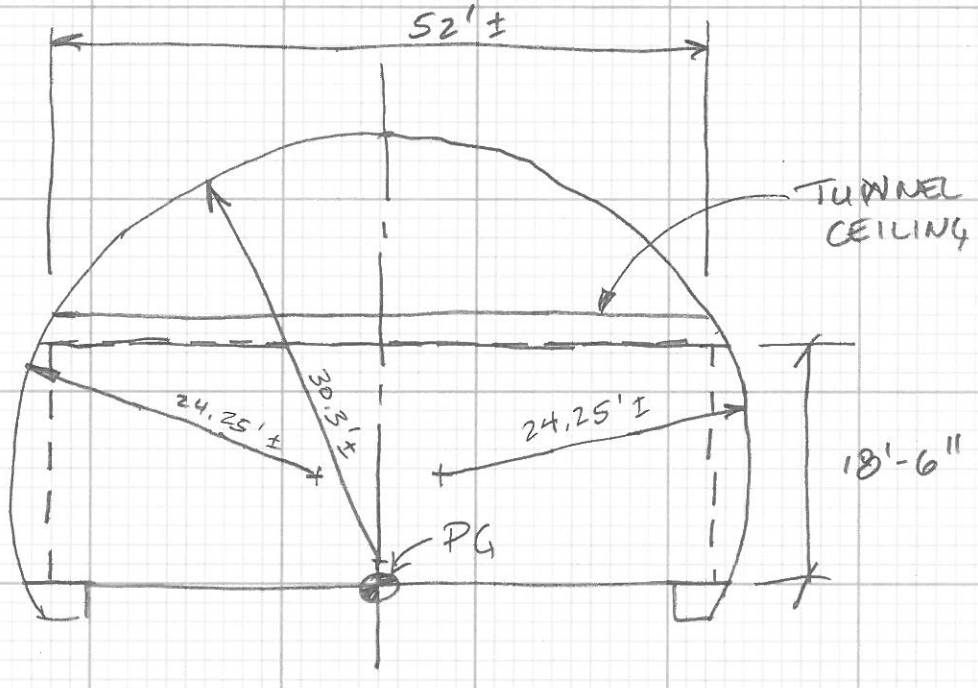

ALT. 5 SECTION @ EJMT
NO SCALE

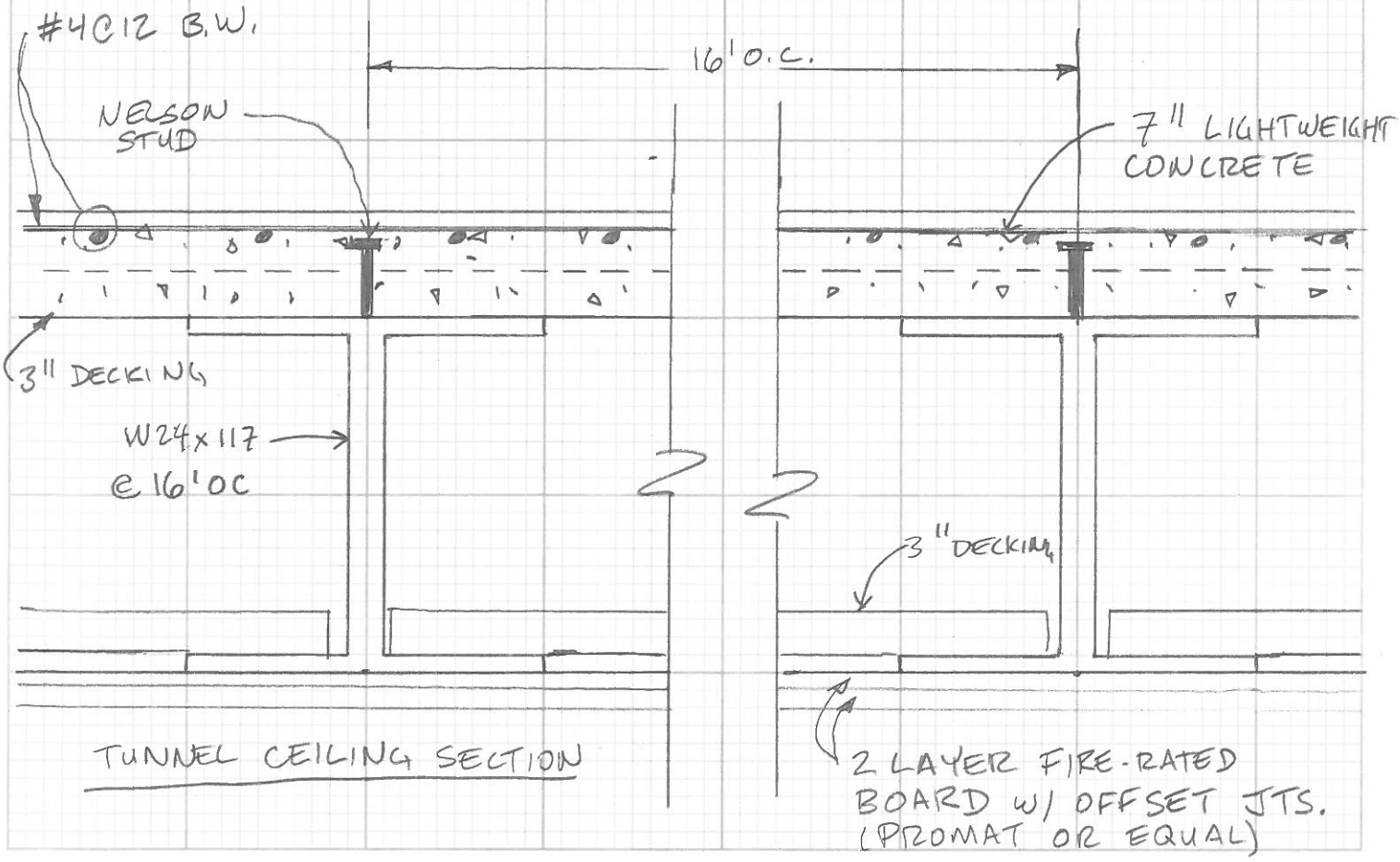

TUNNEL CEILING SECTION

I-70 ALT 5 DELT OPTION: LIGHTWEIGHT CONCRETE

LOADS

DEAD

METAL DECK = 3 PSF
LIGHTWEIGHT 3500 psi CONCRETE = 150 PSF

LIVE

CONSTRUCTION/MAINTENANCE = 25 PSF

$w_u = 1.2D + 1.6L$

$w_u = 16'(1.2(3\,PSF + 150\,PSF) + 1.6(25\,PSF)) = 3,577.6\ LB/FT$

$M_u = \frac{w_u l^2}{8}$; $l = 52'$ => 1209 k-ft

$\Delta = \frac{L}{360} = \frac{52'}{360} = 1.73''$ $\Delta = \frac{5 w_L l^4}{384 EI}$ => $I = 1310$

W24 x 117 UNBRACED

*8700' TUNNEL LENGTH

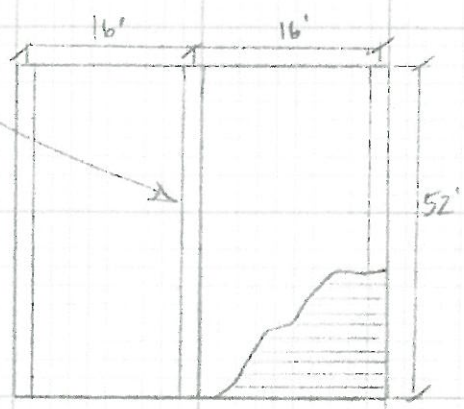

QUANTITIES

STEEL = $\frac{8700'}{16'}$ = 544 SPANS

$544 \times (52' \times 117\ lb/ft)$

= 3,309,696 lb = 1654.85 TN

=> 1654.85 TN x $1200/TN

= $1,985,817.60

CONCRETE = 4" x 52' x 8700' = 5,585.12 CY + 623 CY

= 6,208 CY

STEEL

STRUCTURAL STEEL

W24x117 @ 16' OC

$\frac{8700'}{16' \text{ OC}}$ = 544 spans

WEIGHT : $\frac{544 \times 52' \times 117\#/ft}{2000\#/T}$ = 1700 T

DECKING

AREA = 2 x 52' x 8700' = 904,800 FT²

WEIGHT: 904,800 FT² x $\frac{0.0336''}{12}$ x 500 #/FT²/2000 = 640 T

DECKING: 3" DEEP, GALVANIZED
22 MSG ⇒ 0.0336"

REBAR:

#4 @ 12" EW.

LENGTH: · 52' x 8700'/1' EA = 452,400 FT
· 8700' x 52'/1 = "
904,800 LF

WT: 0.668 #/FT

TOTAL WEIGHT: 904,800 LF x 0.668 #/FT = 610,000 #
= 305 T

CONCRETE

$\frac{4''}{12}$ x 52' x 8700'/27 = 5600 YD³

PROMAT BOARD

52' x 8700' = 452,400 FT²

CEILING COST ESTIMATE

STRUCTURAL STEEL:	1700T @ $1200/TN	=	$2,040,000
DECKING " :	640T @ $1300/TN	=	832,000
REINFORCING " :	305T @ $2000/TN	=	610,000
CONCRETE :	5600 CYC $400	=	2,240,000
PROMAT (ALLOWANCE)			2,000,000
CONNECTIONS, ETC (ALLOWANCE)			1,500,000
STRUCTURE COST ESTIMATE:			$9,222,000

$$\text{UNIT PRICE /LF} = \frac{\$9,222,000}{8700\ \text{LF}} \cong \$1100/\text{LF}$$

$$\left(\text{SQFT} = \frac{1100}{52} = \$20.40/\text{SQFT}\right)$$

FIRE RATED ASSEMBLY

Design No. D919
April 25, 2002

Restrained Assembly Ratings — 1, 1-1/2, 2 and 3 Hr (See Items 1 and 4)

Unrestrained Assembly Rating — 0 Hr (See Item 3)

Unrestrained Beam Rating — 1 and 1-1/2 Hr (See Item 4)

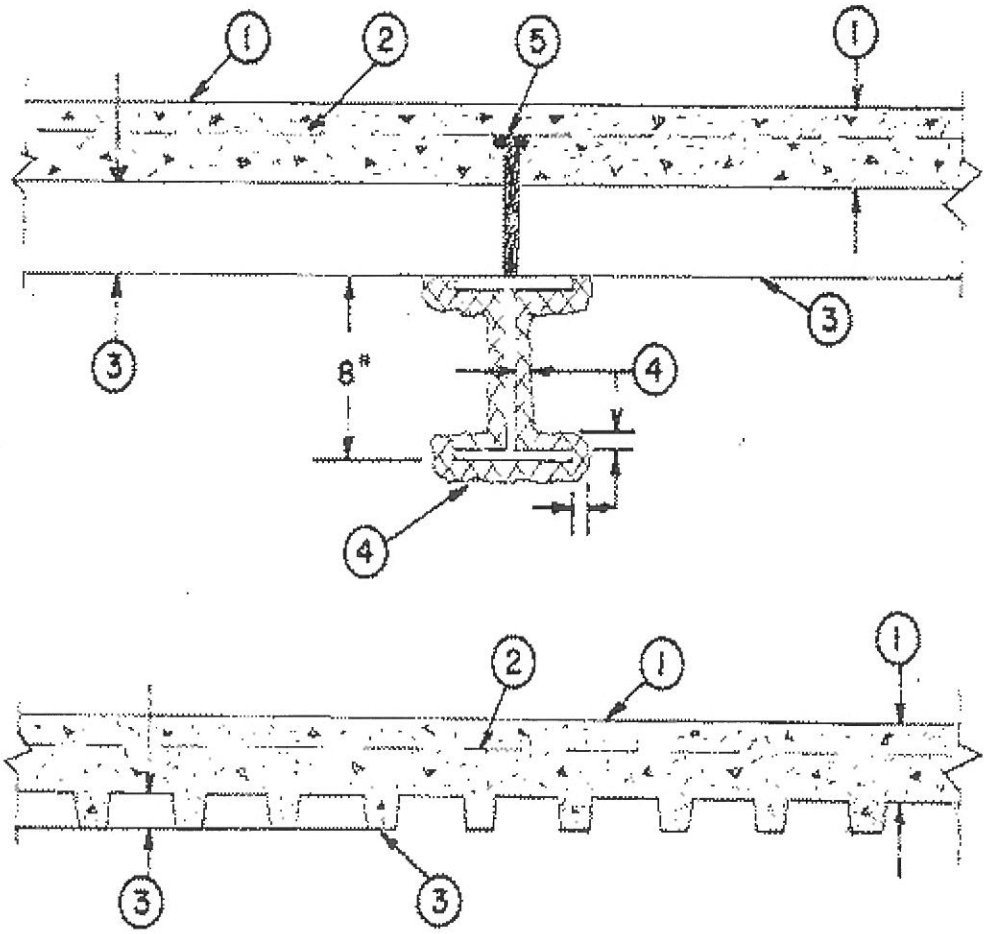

Beam — W8X28, min size.

1. **Normal Weight or Lightweight Concrete** — Normal weight concrete carbonate or siliceous aggregate, 3500 psi compressive strength, vibrated. Lightweight concrete, expanded shale, clay or slate aggregate by rotary kiln method, 3000 psi compressive strength, vibrated, 4 to 7 percent entrained air.

Restrained Assembly Rating Hr	Concrete (Type)	Concrete Unit Weight pcf	Concrete Thkns In.
1	Normal Weight	147-153	3-1/2
1-1/2	Normal Weight	147-153	4
2	Normal Weight	147-153	4-1/2
3	Normal Weight	147-153	5-1/4

1	Lightweight	107-113	2-1/2
1-1/2	Lightweight	107-113	3
2	Lightweight	107-116	3-1/4
2	Lightweight	114-120	3-1/2
3	Lightweight	107-113	4-3/16
3	Lightweight	114-120	4-7/16

2. **Welded Wire Fabric** — 6 x 6 - W1.4 x W1.4.

3. **Steel Floor and Form Units*** — Composite 1-1/2, 2 or 3 in. deep galv units. Min gauges are 22 MSG for fluted and 20/20 MSG for cellular. Fluted units may be phos/ptd. The following combinations of units may be used:

(1) All fluted.

(2) A blend of one or more fluted units to one 24 in. wide cellular unit.

CONSOLIDATED SYSTEMS INC — 24 or 36 in. wide types CFD-2 or CFD-3; 24, 30 or 36 in. wide Type CFD-1.5. Units may be phos/ptd.

Spacing of welds attaching units to supports shall be 12 in. OC for 24 and 36 in. wide units, four welds per sheet for 30 in. wide units. Adjacent units button-punched or welded together 36 in. OC along side joints.

The Unrestrained Assembly Rating is 1-1/2 Hr. — for the following units and limitations:

(a) 1-1/2 in. deep, 24 in. wide, 22 MSG or thicker fluted with clear spans not more than 7 ft 8 in.

(b) 1-1/2 in. deep, 24 in. wide, 20 MSG or thicker fluted with clear spans not more than 8 ft 8 in.

(c) 1-1/2 in. deep, 24 in. wide, 16 MSG or thicker fluted and 18/18 MSG or thicker cellular with clear spans not more than 9 ft 11 in.

(d) 3 in. deep, 36 in. wide, 18 MSG or thicker fluted and 24 in. wide, 20/18 MSG or thicker cellular with clear spans not more than 13 ft 2 in.

4. **Spray-Applied Fire Resistive Materials*** — Spray applied in one coat to a final tamped or untamped thickness as shown in table below, to steel surface which must be clean and free of dirt, oil and loose scale. Use of adhesive and tamping is optional. Min avg density of 13 pcf with min ind density of 11 pcf for Types DC/F and II. Min avg density of 22 pcf with min ind density of 19 pcf for Type HP. For method of density determination refer to Design Information Section.

Unrestrained Beam Rating Hr	Restrained Assembly Rating Hr	Concrete Type	Min Thkns of Spray Applied Fire Resistive Mtl on Beam In.	
			Fluted Deck Only	Blend or Cellular Unit
1	1,1-1/2,2	NW	3/8,1/2*	3/8,1/2*
1	1,1-1/2,2	LW	3/8,1/2*	7/16,9/16*
1-1/2	3	NW	1/2	1/2
1-1/2	3	LW	5/8	11/16

* — Thickness applies when optional items 6 or 7 are used over 3-1/4 in. lightweight concrete topping.

ISOLATEK INTERNATIONAL — Types DC/F, II or HP. Type EBS or Type X adhesive/sealer is optional.

5. **Shear-Connector Studs** — (Optional) — Studs, 3/4 in. diam by 3 in. long, for 1-1/2 in. deep form units to 5-1/4 in. long for 3 in. deep form units, headed type or equivalent per AISC specifications. Welded to the top flange of the beam through the steel form units.

6. **Mineral and Fiberboards*** — (Optional, not shown). For use with the 3-1/4 in. lightweight concrete topping only — Applied over concrete floor with no restriction on thickness. See **Mineral and Fiber Board** (CERZ) category for names of manufacturers.

7. **Foamed Plastic*** — (Optional, not shown. For use with the 3-1/4 in. lightweight concrete topping only). — Consisting of polyisocyanurate, urethane or phenolic roof insulations. Applied over concrete floor with no restrictions on thickness. See **Foamed Plastic** (CCVW) for list of manufacturers.

8. **Cellular Concrete — Roof Topping Mixture*** — Concentrate mixed with water and Portland cement per manufacturer's specifications. Cast dry density and 28 day min compressive strength of 190 psi as determined in accordance with ASTM C495-86.

CELLULAR CONCRETE L L C — Cast dry density of 37 (+ or -) 3.0 pcf.

ELASTIZELL CORP OF AMERICA — Type II. Mix #1 of cast dry density 39 (+ or -) 3.0 pcf, Mix #2 of cast dry density 40 (+ or -) 3.0 pcf, Mix #3 of cast dry density 47 (+ or -) 3.0 pcf.

LITE-CRETE INC — Cast density 29 (+ or -) 3.0 pcf.

9. **Insulated Concrete** — (Optional not shown)various types of insulated concrete prepared and applied in the thickness indicated.

A. **Vermiculite Concrete** — Mix consists of 6 cu ft of Vermiculite Aggregate*, 94 lbs of Portland cement and 6 oz of air entraining agent. Thickness to be 2 in. min from the top plane of steel roof deck.

ELASTIZELL CORP OF AMERICA — Types MS 16-U, MSV 200.

B. Perlite Concrete Mix consists of 6.2 cu ft Perlite Aggregate* to 94 lbs of Portland cement and 1-1/2 pt air entraining agent. Compressive strength 80 psi min.

See Perlite Aggregate (CFFX) category for names of Classified companies.

*Bearing the UL Classification Mark

Reprinted from the Online Certifications Directory with permission from Underwriters Laboratories Inc.
Copyright © 2005 Underwriters Laboratories Inc.®