AS BUILT

H-22

REVISIONS			
Rev No.	Date	By	Description
△	5/19/71	R. SANS	INCREASE SPACING OF AERIAL SUPPORTS TO 50.00' LOCATE SUPPORTS AT STATIONS 3+53, 4+05, 4+55 & 5+05 DELETE ONE AERIAL SUPPORTS.

24" AERIAL SEWER FOR CITY OF COLORADO SPRINGS	
R. KEITH HOOK & ASSOCIATES CONSULTING ENGINEERS COLORADO SPRINGS, COLORADO	
DRAWN BY: W.C. BARKER	JOB No 70-897 / FILE No 1231
CHECKED BY:	
REFERENCE F8415/26-41	SHEET 1 OF 3

NOTE:
THIS DWG. SUPERSEDES SHT. 1 OF 3 FILE No 1216

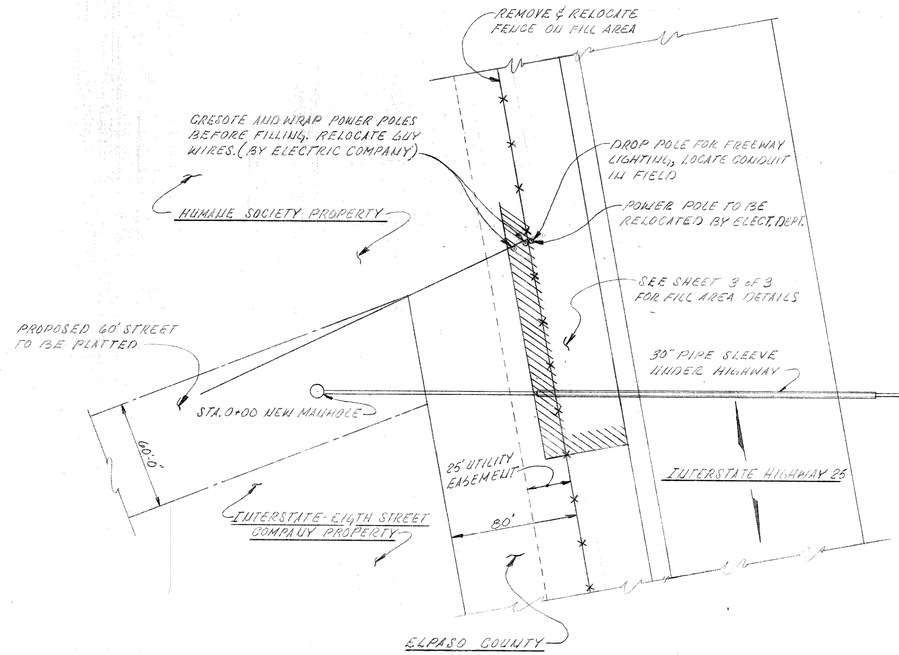

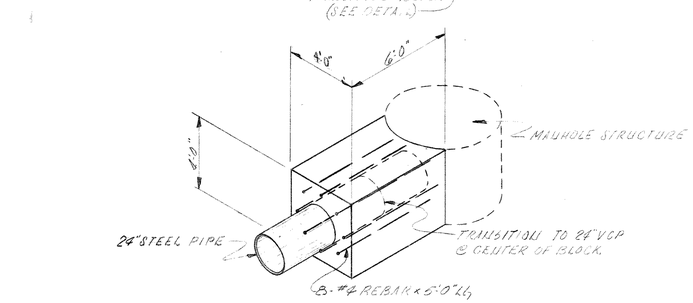

TRANSITION BLOCK DETAIL
SCALE: 1/4" = 1'0"

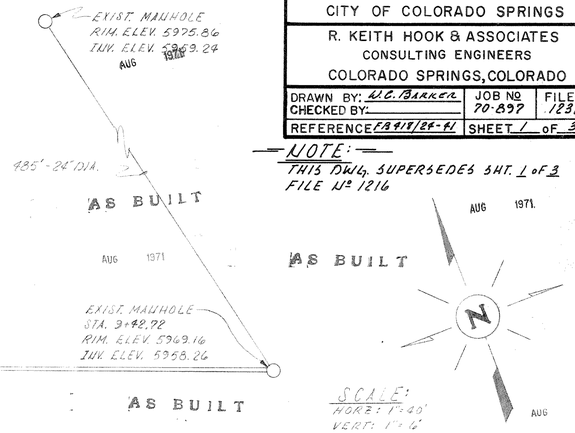

GENERAL NOTES:

1. - BENCHMARK - NAIL IN CONCRETE CURB RETURN AT NORTHWEST CORNER OF AUG 1971 STREET AND MORENO. ELEV. 6002.01 (CITY DATUM)
2. - ALL STEEL SEWER PIPE IS TO BE LINED WITH COAL-TAR ENAMEL AND HAVE A WALL THICKNESS OF 3/8" INCH.
3. - NO JOINT OF STEEL PIPE IS TO EXCEED 60' FEET IN LENGTH.
4. - FOR DETAILS OF SUPPORT STRUCTURE SEE SHEET 2 OF 3 R.K.H. FILE No 1216 (PROFILES) FOR DETAILS OF FILL AREA SEE SHEET 3 OF 3 R.K.H. FILE No 1216 (PROFILES)
5. - ALL MATERIALS AND CONSTRUCTION IS TO BE IN ACCORDANCE WITH CITY OF COLORADO SPRINGS SPECIFICATIONS.
6. - ALL MATERIAL AND CONSTRUCTION IS SUBJECT TO THE INSPECTION OF THE ENGINEER AND THE CITY OF COLORADO SPRINGS SEWER DEPT.
7. - SEE SPECIFICATIONS FOR COATING AND PACKING.
8. - CONTRACTOR SHALL BE RESPONSIBLE FOR LOCATING ALL EXISTING UTILITIES THAT MAY BE AFFECTED BY CONSTRUCTION.

AS BUILT
AUG 1971

AUG 1971

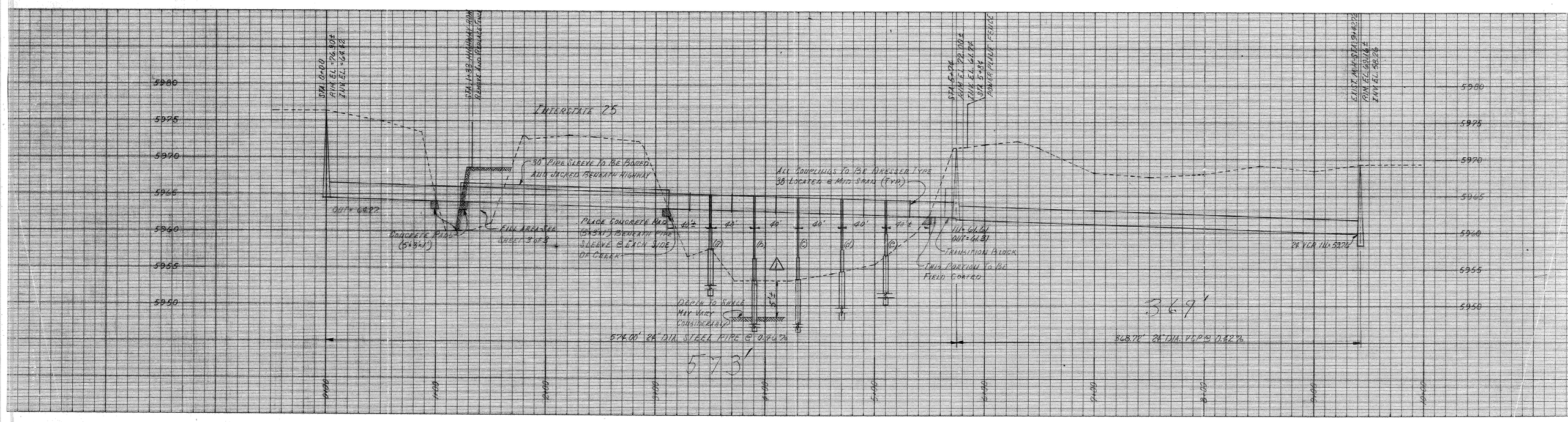

71-092