CONTRACT DOCUMENTS
FOR THE CONSTRUCTION OF THE

PHASE 2 REUSE PROJECT
SOUTHWEST NON-POTABLE PIPELINE

BEAR CREEK NON-POTABLE PIPELINE

FOR

Colorado Springs Utilities

It's how we're all connected

ST. - 1/20/04
F. - 7/22/04
CONT. - High Country pipeline
Foreman - "Nick"
Inspector - Andrew Pinello/Paul Morbarger
approx. 8250' 24" Dip pacific states
Mueller Valves
see sheets 10 Thru 17
materials List page-4

P. Mosbarger took over for A. Pinello 2/20/04

VOLUME 3 OF 3
DRAWINGS

JULY 2004

FOR INFORMATION REGARDING
THIS PROJECT CONTACT:
MARK ROSSER, P.E.
COLORADO SPRINGS, COLORADO
719-477-4950

CH2MHILL
Denver, CO 80112

integra engineering
450 DECATUR STREET
Denver, Colorado 80204 (303)825-1802

COLORADO REGISTERED PROFESSIONAL ENGINEER
MARK ROSSER
32181
07-09-04

RECORD DRAWINGS

Revisions Drawn By B. CLEGG Date JULY 2004

THESE RECORD DRAWINGS HAVE BEEN PREPARED, IN PART, ON THE BASIS OF INFORMATION COMPILED BY OTHERS. THEY ARE NOT INTENDED TO REPRESENT IN DETAIL THE EXACT LOCATION, TYPE OF COMPONENT NOR MANNER OF CONSTRUCTION. THE ENGINEER WILL NOT BE RESPONSIBLE FOR ANY ERRORS OR OMISSIONS WHICH HAVE BEEN INCORPORATED INTO THE RECORD DRAWINGS.

REUSE OF DOCUMENTS: THIS DOCUMENT, AND THE IDEAS AND DESIGNS INCORPORATED HEREIN, AS AN INSTRUMENT OF PROFESSIONAL SERVICE, IS THE PROPERTY OF CH2M HILL AND IS NOT TO BE USED, IN WHOLE OR IN PART, FOR ANY OTHER PROJECT WITHOUT THE WRITTEN AUTHORIZATION OF CH2MHILL. ©CH2M HILL

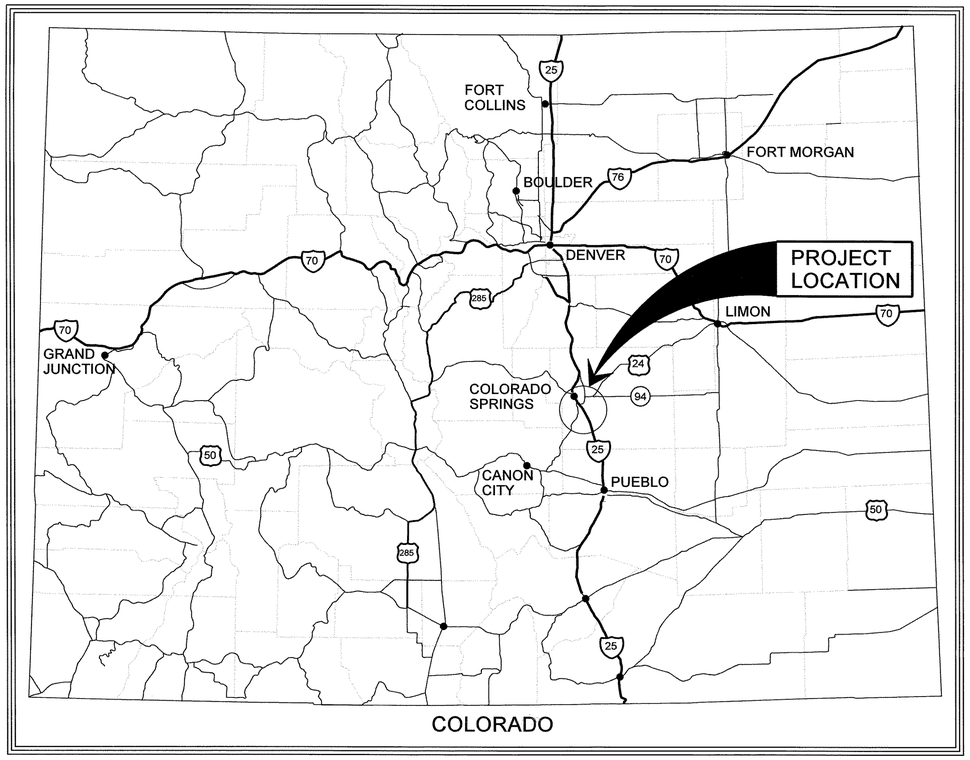

LOCATION MAP

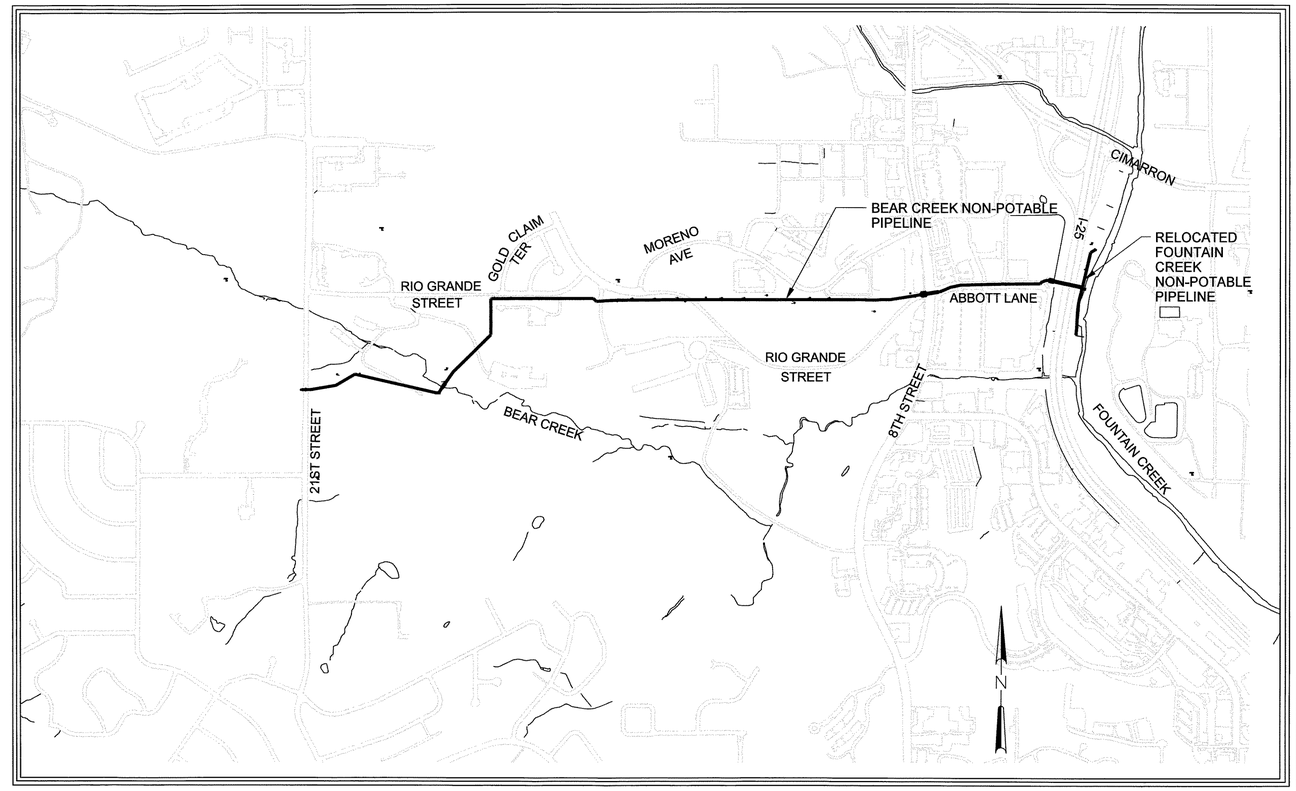

VICINITY MAP

INDEX TO DRAWINGS

SHEET	DRAWING NO.	SHEET TITLE
GENERAL SHEETS		
1	G-1	COVER SHEET
2	G-2	INDEX TO DRAWINGS, LOCATION MAP, AND VICINITY MAP
3	G-3	KEY MAP
4	G-4	SURVEY CONTROL, UTILITY CROSSINGS, POTHOLE DATA AND BORE DATA
5	G-5	LEGENDS
6	G-6	ABBREVIATIONS AND GENERAL NOTES
7	G-7	HYDRAULIC PROFILE STA 100+00 TO STA 107+73.96 AND 3+11.65 TO STA 24+00
8	G-8	HYDRAULIC PROFILE STA 24+00 TO STA 53+00
9	G-9	HYDRAULIC PROFILE STA 53+00 TO STA 77+85.73
FOUNTAIN CREEK NON-POTABLE PIPELINE RELOCATION PLAN & PROFILE SHEETS		
10	PP-1	PLAN AND PROFILE POB 100+00.00 TO POE 107+73.96
BEAR CREEK PIPELINE PLAN AND PROFILE SHEETS		
11	PP-2	PLAN AND PROFILE STA 3+11.65 TO STA 12+00
12	PP-3	PLAN AND PROFILE STA 12+00 TO STA 24+00
13	PP-4	PLAN AND PROFILE STA 24+00 TO STA 34+00
14	PP-5	PLAN AND PROFILE STA 34+00 TO STA 45+00
15	PP-6	PLAN AND PROFILE STA 45+00 TO STA 57+00
16	PP-7	PLAN AND PROFILE STA 57+00 TO STA 68+00
17	PP-8	PLAN AND PROFILE STA 68+00 TO POE 77+85.73

SHEET	DRAWING NO.	SHEET TITLE
BEAR CREEK PIPELINE CIVIL SHEETS		
18	C-1	APPURTENANCE DETAILS
19	C-2	APPURTENANCE DETAILS
20	C-3	TRENCH SECTION, ASPHALT, BEAR CREEK PARK VAULT, AND LOWERING DETAILS
21	C-4	REVERSE ANCHOR, RESTRAINED JOINT, AND THRUST BLOCK DETAILS
22	C-5	TRENCH PLUG AND UTILITY CROSSING DETAILS
23	C-6	CONCRETE ENCASEMENT AND BORING DETAILS
24	C-7	CATHODIC PROTECTION DETAILS
25	C-8	CATHODIC PROTECTION DETAILS
26	C-9	APPURTENANCE AND RIPRAP DETAILS
27	C-10	CONNECTION DETAILS
28	C-11	APPURTENANCE DETAILS

COLORADO REGISTERED PROFESSIONAL ENGINEER
32181
01-09-04

RECORD DRAWINGS

Revisions Drawn By BCLEGG Date JULY 2004

THESE RECORD DRAWINGS HAVE BEEN PREPARED, IN PART, ON THE BASIS OF INFORMATION COMPILED BY OTHERS. THEY ARE NOT INTENDED TO REPRESENT IN DETAIL THE EXACT LOCATION, TYPE OF COMPONENT NOR MANNER OF CONSTRUCTION. THE ENGINEER WILL NOT BE RESPONSIBLE FOR ANY ERRORS OR OMISSIONS WHICH HAVE BEEN INCORPORATED INTO THE RECORD DRAWINGS.

REUSE OF DOCUMENTS: THIS DOCUMENT, AND THE IDEAS AND DESIGNS INCORPORATED HEREIN, AS AN INSTRUMENT OF PROFESSIONAL SERVICE, IS THE PROPERTY OF CH2M HILL AND IS NOT TO BE USED, IN WHOLE OR IN PART, FOR ANY OTHER PROJECT WITHOUT THE WRITTEN AUTHORIZATION OF CH2MHILL.

©CH2M HILL

integra engineering
450 DECATUR STREET
Denver, Colorado 80204 (303)825-1802

DSGN	W CHRISTOFFERSON
DR	M MONAHAN
CHK	G SIMPSON
APVD	M ROSSER

NO.	DATE	REVISION	BY	APVD

VERIFY SCALE
BAR IS ONE INCH ON ORIGINAL DRAWING.
0 1"
IF NOT ONE INCH ON THIS SHEET, ADJUST SCALES ACCORDINGLY.

CH2MHILL
Denver, CO 80112

Colorado Springs Utilities
It's how we're all connected

SOUTHWEST NON POTABLE WATER PIPELINE PROJECT PHASE 2

GENERAL
BEAR CREEK PIPELINE
INDEX TO DRAWINGS, LOCATION MAP, AND VICINITY MAP

SHEET	2
DWG	G-2
DATE	JULY 2004
PROJ	279649.TP.DE.BC

Colorado Springs Utilities Project No. 394245, Work Order No. 1152273, Colorado Springs Utilities Contract No. 200303829 MAP NO. : SOUTHWEST QUADRANT

FILENAME: brckg05.dlv PLOT DATE: 30-JUN-2004 PLOT TIME: 16:16:06

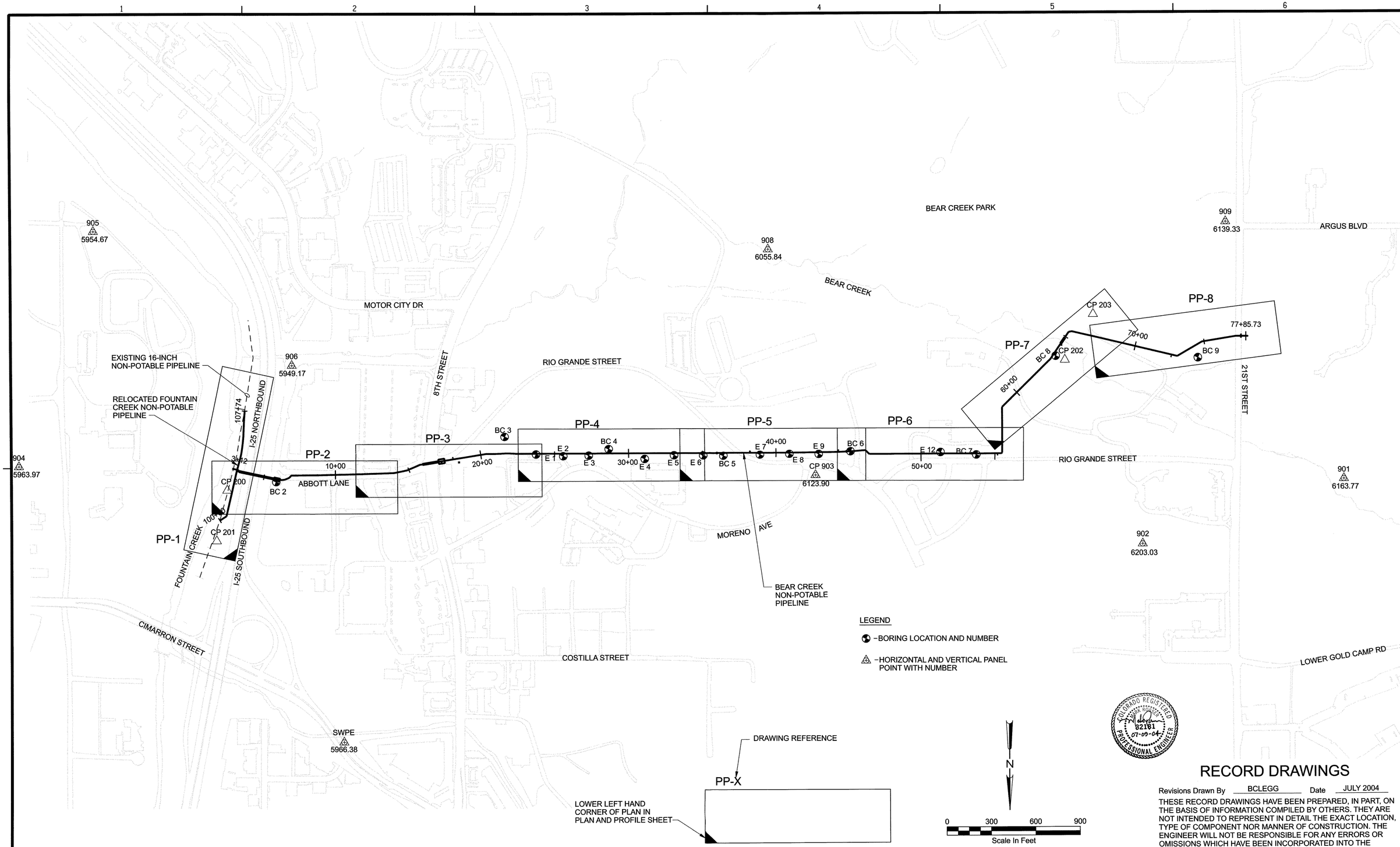

LEGEND

- BORING LOCATION AND NUMBER
- HORIZONTAL AND VERTICAL PANEL POINT WITH NUMBER

COLORADO REGISTERED PROFESSIONAL ENGINEER 32161 07-09-04

RECORD DRAWINGS

Revisions Drawn By BCLEGG Date JULY 2004

THESE RECORD DRAWINGS HAVE BEEN PREPARED, IN PART, ON THE BASIS OF INFORMATION COMPILED BY OTHERS. THEY ARE NOT INTENDED TO REPRESENT IN DETAIL THE EXACT LOCATION, TYPE OF COMPONENT NOR MANNER OF CONSTRUCTION. THE ENGINEER WILL NOT BE RESPONSIBLE FOR ANY ERRORS OR OMISSIONS WHICH HAVE BEEN INCORPORATED INTO THE RECORD DRAWINGS.

©CH2M HILL

REUSE OF DOCUMENTS: THIS DOCUMENT, AND THE IDEAS AND DESIGNS INCORPORATED HEREIN, AS AN INSTRUMENT OF PROFESSIONAL SERVICE, IS THE PROPERTY OF CH2M HILL AND IS NOT TO BE USED, IN WHOLE OR IN PART, FOR ANY OTHER PROJECT WITHOUT THE WRITTEN AUTHORIZATION OF CH2M HILL.

integra engineering
450 DECATUR STREET
Denver, Colorado 80204 (303)825-1802

DSGN	W CHRISTOFFERSON
DR	M MONAHAN
CHK	G SIMPSON
APVD	M ROSSER

NO.	DATE	REVISION	BY	APVD

VERIFY SCALE
BAR IS ONE INCH ON ORIGINAL DRAWING.
0 1"
IF NOT ONE INCH ON THIS SHEET, ADJUST SCALES ACCORDINGLY.

CH2MHILL
Denver, CO 80112

Colorado Springs Utilities
It's how we're all connected

SOUTHWEST NON POTABLE WATER PIPELINE PROJECT PHASE 2

GENERAL

BEAR CREEK PIPELINE KEY MAP

SHEET 3
DWG G-3
DATE JULY 2004
PROJ 279649.TP.DE.BC

Colorado Springs Utilities Project No. 394245, Work Order No. 1152273, Colorado Springs Utilities Contract No. 200303829 MAP NO. : SOUTHWEST QUADRANT

brckg02.dlv 30-JUN-2004 16:16:53

POTHOLE DATA

NO	APPROX STA	NORTHING	EASTING	SURFACE ELEVATIONS	DEPTH TO TOP OF PIPE	ELEV TO TOP OF PIPE	ELEV TO INVERT	DESCRIPTION
1	100+00	1362047.55	3189424.03	-	-	5931.91'	5930.58'	16" NON-POT
2	100+00	1361996.65	3189412.28	-	-	5930.81'	5929.48'	16" NON-POT
3	6+14	1361778.80	3189032.80	5950.07'	4.58'	5945.49'	5944.49'	12" WATER (FH)
4	6+50	1361772.75	3188999.75	5951.19'	3.33'	5947.86'	5947.69'	2" GAS
5	9+80	1361765.35	3188661.84	5961.81'	1.66'	5960.15'	5959.98'	2" ELECTRIC
6	10+30	1361764.72	3188610.31	5963.59'	5.50'	5958.09'	5957.09'	12" WATER
7	13+10	1361758.93	3188334.81	5973.35'	5.25'	5968.10'	5967.60'	6" WATER (FH)
8	16+15	1361705.77	3188038.18	5982.45'	2.92'	5979.53'	5979.36'	2" GAS
9	16+20	1361705.77	3188038.18	5982.45'	7.83'	5974.62'	5974.45'	FO
10	16+30	1361702.32	3188024.25	5982.26'	3.16'	5979.10'	5978.77'	4" GAS
11	16+50	NOT SURVEYED	NOT SURVEYED	NOT SURVEYED	7.83'	NOT SURVEYED	NOT SURVEYED	2" TELEPHONE
12	16+65	NOT SURVEYED	NOT SURVEYED	NOT SURVEYED	10.92'	NOT SURVEYED	NOT SURVEYED	42" WATER
13	16+80	1361693.82	3187974.43	5981.33'	10.58'	5970.75'	5967.75'	36" WATER
14	16+85	1361691.67	3187964.49	5980.94'	7.83'	5973.11'	5971.11'	24" WATER
15	17+00	1361689.83	3187957.11	5980.69'	2.66'	5978.03'	5977.86'	2" GAS
16	37+85	1361616.01	3185889.61	6089.12'	5.58'	6083.54'	6082.87'	8" WATER
17	38+15	1361574.98	3185937.57	6087.02'	7.75'	6079.27'	6077.60'	20" WATER
18	50+05	1361661.55	3184671.81	6147.27'	6.75'	6040.52'	6039.85'	6" WATER (FH)
19	51+95	1361636.03	3184484.37	6151.79'	7.33'	6144.46'	6143.79'	8" WATER
20	53+50	1361635.26	3184325.11	6153.46'	7.66'	6145.80'	6145.13'	8" WATER
21	54+80	1361635.56	3184195.46	6152.33'	8.50'	6143.83'	6143.16'	8" WATER
22	77+21	1360823.88	3182537.69	6134.99'	5.00'	6129.99'	6128.32'	20" WATER
23	77+62	1360824.50	3182496.64	6135.55'	2.66'	6132.89'	6132.56'	4" GAS
24	77+82	1360824.10	3182487.72	6135.55'	8.92'	6126.63'	6125.63'	FO
25	51+95	1361657.18	3184483.10	6152.92'	7.75'	6145.17'	6144.50'	8" WATER
26	53+52	1361655.81	3184323.80	6153.97'	7.42'	6146.55'	6145.88'	8" WATER
27	54+80	1361656.26	3184194.52	6151.92'	8.58'	6143.34'	6142.67'	8" WATER

NOTES:

1. POTHOLE DEPTHS PROVIDED BY SITEWISE, JUNE, 2003.
2. POTHOLE SURFACE SURVEY BY JR ENGINEERING, MAY/JUNE, 2003.

BORE HOLE DATA

NO	NORTHING	EASTING
BC1	NOT SURVEYED	
BC2	1361793.75	3189052.63
BC3	1361527.38	3187491.75
BC4	1361599.39	3186792.19
BC5	1361643.20	3186014.23
BC6	1361617.82	3185170.96
BC7	1361641.18	3184303.30

NOTES:

1. REFERENCE "GEOTECHNICAL ENGINEERING STUDY SOUTHWEST NON-POTABLE PIPELINE PROJECT" BY KUMAR & ASSOCIATES, JANUARY 27, 2003 PROJECT NO. 032-100.

ENVIRONMENTAL TEST HOLE DATA

NO	NORTHING	EASTING
E1	1361631.21	3187283.82
E2	1361641.24	3187098.78
E3	1361642.25	3186927.92
E4	1361664.60	3186549.83
E5	1361639.26	3186351.25
E6	1361639.77	3186155.20
E7	1361638.73	3185766.49
E8	1361633.32	3185567.89
E9	1361634.51	3185369.32
E12	1361630.18	3184450.91

NOTES:

1. REFERENCE "PHASE II ENVIRONMENTAL SITE ASSESSMENT PROPOSED SOUTWEST NON-POTABLE WATERLINE SEGMENT OF BEAR CREEK PIPELINE COLORADO SPRINGS CO" BY KUMAR & ASSOCIATES, JANUARY 27, 2003 PROJECT NO. 032-100A.

Abandoned
774' - 16" DIP NP Pipe

SURVEY CONTROL AND PANEL POINTS

POINT NO	NORTHING	EASTING	ELEVATION	DESCRIPTION
901	1361804.16	3181811.35	6163.77'	PANEL POINT
902	1362239.48	3183174.30	6203.03'	PANEL POINT
903	1361790.21	3185246.90	6123.90'	PANEL POINT
904	1361705.67	3190785.03	5963.97'	PANEL POINT
905	1360131.14	3190274.29	5954.67'	PANEL POINT
906	1361032.45	3188935.33	5949.17'	PANEL POINT
908	1360261.01	3185706.63	6055.84'	PANEL POINT
909	13600081.89	3182612.42	6139.33'	PANEL POINT
200	1361906.20	3189348.36	5936.98'	CONTROL POINT
201	1362123.73	3189396.69	5940.35'	CONTROL POINT
202	1361030.87	3183743.62	6098.40'	CONTROL POINT
203	1360822.47	3183683.23	6087.49'	CONTROL POINT

NOTES:

1. SURVEY CONTROL SET BY JR ENINEERING, MAY/JUNE 2003.
2. PANEL POINTS SET BY AERIAL SURVEYS INTERNATIONAL LLC.

Materials List

8250' - 24" Pacific States Dip
1 - 24"x24" Cross M.J.xM.J.
1 - 24"x24" Tee - M.J.xM.J.
5 - 24"x8" Tees - M.J.xM.J.
10 - 24"x6" Tee - M.J.xM.J.
21 - 24" Mueller 250lb. B.F. Valves
6 - 8" Mueller 250lb. Gate Valves (5 - Box, 5 - AW)
10 - 6" Mueller 250lb. Gate Valves
24 - 24"x 45° Bends
6 - 24"x 22½° Bends
20 - 24"x 11¼° Bends
2 - 24"x16" M.J. xM.J. Reducers
1 - 24"x12" M.J. xM.J. Reducer
1 12"x 8" - M.J. xP.E. Reducer
181 - 24" Dip mega-lugs
2 - 16" Dip mega-lugs
2 - 12" Dip mega-lugs
18 - 8" Dip mega-lugs
30 - 6" Dip mega-lugs

COLORADO REGISTERED MARK ROSSER 32181 07-09-04 PROFESSIONAL ENGINEER

RECORD DRAWINGS

Revisions Drawn By BCLEGG Date JULY 2004

THESE RECORD DRAWINGS HAVE BEEN PREPARED, IN PART, ON THE BASIS OF INFORMATION COMPILED BY OTHERS. THEY ARE NOT INTENDED TO REPRESENT IN DETAIL THE EXACT LOCATION, TYPE OF COMPONENT NOR MANNER OF CONSTRUCTION. THE ENGINEER WILL NOT BE RESPONSIBLE FOR ANY ERRORS OR OMISSIONS WHICH HAVE BEEN INCORPORATED INTO THE RECORD DRAWINGS.

REUSE OF DOCUMENTS: THIS DOCUMENT, AND THE IDEAS AND DESIGNS INCORPORATED HEREIN, AS AN INSTRUMENT OF PROFESSIONAL SERVICE, IS THE PROPERTY OF CH2M HILL AND IS NOT TO BE USED, IN WHOLE OR IN PART, FOR ANY OTHER PROJECT WITHOUT THE WRITTEN AUTHORIZATION OF CH2MHILL.
©CH2M HILL

integra engineering
450 DECATUR STREET
Denver, Colorado 80204 (303)825-1802

DSGN	W CHRISTOFFERSON
DR	M MONAHAN
CHK	G SIMPSON
APVD	M ROSSER

NO.	DATE	REVISION	BY	APVD

VERIFY SCALE
BAR IS ONE INCH ON ORIGINAL DRAWING.
0 1"
IF NOT ONE INCH ON THIS SHEET, ADJUST SCALES ACCORDINGLY.

CH2MHILL
Denver, CO 80112

Colorado Springs Utilities
It's how we're all connected

SOUTHWEST NON POTABLE WATER PIPELINE PROJECT PHASE 2

GENERAL
BEAR CREEK PIPELINE
SURVEY CONTROL, UTILITY CROSSINGS, POTHOLE DATA AND BORE DATA

SHEET 4
DWG G-4
DATE JULY 2004
PROJ 279649.TP.DE.BC

Colorado Springs Utilities Project No. 394245, Work Order No. 1152273, Colorado Springs Utilities Contract No. 200303829 MAP NO. : SOUTHWEST QUADRANT

FILENAME: brckg04.dlv PLOT DATE: 24-JUN-2004 PLOT TIME: 11:30:26

EXISTING FEATURES

- PROPERTY LINE AND/OR RIGHT-OF-WAY
- EASEMENT LINE
- SECTION LINE, MUNICIPALITY BOUNDARY
- CENTER LINE
- CULVERT
- (OH) — OVERHEAD POWER, TELEPHONE, OR CABLE TV
- G — GAS LINE (FIELD LOCATED)
- G — GAS LINE (FIMS MAPPING)
- W — WATER LINE (FIELD LOCATED)
- W — WATER LINE (FIMS MAPPING)
- NP — NON-POTABLE WATER LINE (FIELD LOCATED)
- NP — NON-POTABLE WATER LINE (FIMS MAPPING)
- SAN — SANITARY SEWER (FIELD LOCATED)
- SAN — SANITARY SEWER (FIMS MAPPING)
- E — UNDERGROUND POWER (FIELD LOCATED)
- E — UNDERGROUND POWER (FIMS MAPPING)
- T — UNDERGROUND TELEPHONE (FIELD LOCATED)
- SD — STORM DRAIN (FIELD LOCATED)
- CTV — CABLE TV (FIELD LOCATED)
- 12" W, 2" G, ETC. — MISC. PIPELINES W/ DIAMETER (FIELD LOCATED)
- 12" W, 2" G, ETC. — MISC. PIPELINES W/ DIAMETER (FIMS MAPPING)
- EXISTING BARBED WIRE FENCE
- EXISTING CHAINLINK FENCE
- EXISTING WOOD FENCE
- VALVE
- CULVERT END
- FIRE HYDRANT
- OR — ELECTRIC, GAS, TELEPHONE, WATER OR SEWER CLEANOUT
- STREET SIGN
- SIGNAL OR LIGHT POLE
- ELECTRIC, TEL OR CABLE TV UTILITY POLE
- WM — WATER METER
- UTILITY VAULT
- EM or EV — ELECTRIC METER OR VAULT/TRANSFORMER
- FIBER OPTICS
- TELEPHONE BOX OR PED
- CABLE TV BOX
- DEADMAN, ANCHOR ON POLE, OR GUY WIRE
- OR — CATCH BASIN
- DROP INLET
- CONIFEROUS TREE
- DECIDUOUS TREE

NEW FEATURES

- ABANDONED PIPE
- 7+00 — NEW MAINLINE OR LATERAL WITH STATIONING
- BUTTERFLY VALVE
- GATE VALVE
- BLOWOFF ASSEMBLY (PLAN) LOCATE MANHOLE ON SIDE SHOWN
- AIR/VACUUM RELEASE VALVE (PLAN) LOCATE VENT PIPE ON SIDE SHOWN
- A — GALVANIC ANODE
- A — GALVANIC ANODE WITH TEST STATION
- TS
- PROPERTY LINE
- PERMANENT/TEMPORARY EASEMENT
- BC-6 — BORING LOCATION AND NUMBER
- TP-1 — TEST PIT LOCATION AND NUMBER
- PROPERTY CORNER
- SECTION CORNER
- PH#2 — POTHOLE LOCATION AND NUMBER
- 822 / 6123.90 — HORIZONTAL AND VERTICAL PANEL POINT W/ NUMBER
- CP200 — SURVEY CONTROL POINT

MISCELLANEOUS

SHEET IDENTIFICATION SYSTEM

SECTION (LETTER) OR DETAIL (NUMERAL) DESIGNATION — A

P-2 — SHEET NUMBER (REPLACE WITH A LINE IF TAKEN AND SHOWN ON SAME DRAWING)

ON DRAWING WHERE SECTION OR DETAIL IS TAKEN: SHEET NUMBER WHERE SHOWN

ON DRAWING WHERE SECTION OR DETAIL IS SHOWN: SHEET NUMBER(S) WHERE TAKEN

CURVE DATA *

R = RADIUS (FT)

D = DELTA (DEGREES)

L = LENGTH OF CURVE (FT)

T = TANGENT LENGTH (FT)

* COMPLETE CURVE INFORMATION SHOWN ON EACH SHEET EVEN WHEN CURVE EXTENDS OVER MORE THAN ONE SHEET.

COLORADO REGISTERED PROFESSIONAL ENGINEER — MARK ROSSER — 32181 — 07-09-04

RECORD DRAWINGS

Revisions Drawn By BCLEGG Date JULY 2004

THESE RECORD DRAWINGS HAVE BEEN PREPARED, IN PART, ON THE BASIS OF INFORMATION COMPILED BY OTHERS. THEY ARE NOT INTENDED TO REPRESENT IN DETAIL THE EXACT LOCATION, TYPE OF COMPONENT NOR MANNER OF CONSTRUCTION. THE ENGINEER WILL NOT BE RESPONSIBLE FOR ANY ERRORS OR OMISSIONS WHICH HAVE BEEN INCORPORATED INTO THE RECORD DRAWINGS.

REUSE OF DOCUMENTS: THIS DOCUMENT, AND THE IDEAS AND DESIGNS INCORPORATED HEREIN, AS AN INSTRUMENT OF PROFESSIONAL SERVICE, IS THE PROPERTY OF CH2M HILL AND IS NOT TO BE USED, IN WHOLE OR IN PART, FOR ANY OTHER PROJECT WITHOUT THE WRITTEN AUTHORIZATION OF CH2MHILL.

© CH2M HILL

integra engineering
450 DECATUR STREET
Denver, Colorado 80204 (303)825-1802

DSGN	W CHRISTOFFERSON
DR	M MONAHAN
CHK	G SIMPSON
APVD	M ROSSER

NO.	DATE	REVISION	BY	APVD

VERIFY SCALE
BAR IS ONE INCH ON ORIGINAL DRAWING.
0 — 1"
IF NOT ONE INCH ON THIS SHEET, ADJUST SCALES ACCORDINGLY.

CH2MHILL
Denver, CO 80112

Colorado Springs Utilities
It's how we're all connected

SOUTHWEST NON POTABLE WATER PIPELINE PROJECT PHASE 2

GENERAL

BEAR CREEK PIPELINE LEGENDS

SHEET	5
DWG	G-5
DATE	JULY 2004
PROJ	279649.TP.DE.BC

Colorado Springs Utilities Project No. 394245, Work Order No. 1152273, Colorado Springs Utilities Contract No. 200303829 MAP NO. : SOUTHWEST QUADRANT

FILENAME: brckg06.dlv PLOT DATE: 30-JUN-2004 PLOT TIME: 16:27:48

ABBREVIATIONS

AB	ANCHOR BOLT, AGGREGATE BASE
ABC	AGGREGATE BASE COURSE
ABND	ABANDONED
AC	ASBESTOS CEMENT, ASPHALTIC CONCRETE
ADJ	ADJACENT, ADJUSTABLE
ADPTR	ADAPTER
AGGR	AGGREGATE
AH	AHEAD
AISC	AMERICAN INSTITUTE OF STEEL CONSTRUCTION
ALIGN	ALIGNMENT
AL	ALUMINUM
AMT	AMOUNT
ANSI	AMERICAN NATIONAL STANDARDS INSTITUTE
APPROX	APPROXIMATELY
ASPH	ASPHALT
ASME	AMERICAN SOCIETY OF MECHANICAL ENGINEERS
ASWG	AMERICAN STEEL WIRE GAGE
ASSY	ASSEMBLY
@	AT
AUTH	AUTHORIZE
AUTO	AUTOMATIC
AVRV	AIR VACUUM RELEASE VALVE
AVE	AVENUE
AVG	AVERAGE
AWS	AMERICAN WELDING SOCIETY
AWWA	AMERICAN WATER WORKS ASSOCIATION
BC	BEGIN CURVE
BCR	BEGIN CURVE RETURN
BD	BOULEVARD
BETW	BETWEEN
BF	BLIND FLANGE
BFV	BUTTERFLY VALVE
BITUM	BITUMINOUS
BK	BACK
BLDG	BUILDING
BLVD	BOULEVARD
BM	BENCH MARK, BEAM
BO	BLOW OFF
BOT	BOTTOM
BRG	BEARING
BV	BALL VALVE
BW	BOTH WAYS
C ESMT	CONSTRUCTION EASEMENT
C&G	CURB AND GUTTER
CATH	CATHODIC
CAV	COMBINATION AIR VALVE
CB	CATCH BASIN
CCP	CONCRETE CYLINDER PIPE
CDF	CONTROL DENSITY FILL
CDOT	COLORADO DEPARTMENT OF TRANSPORTATION
CEM	CEMENT
CFM	CUBIC FEET PER MINUTE
CFS	CUBIC FEET PER SECOND
CIP	CAST IRON PIPE
CL	CENTERLINE
CLASS.	CLASSIFICATION
CLR	CLEAR
CLSM	CONTROLLED LOW STRENGTH MATERIAL
CML&C	CEMENT MORTAR LINED & COATED
CMP	CORRUGATED METAL PIPE
CO	CLEANOUT
COMB	COMBINATION
CONC	CONCRETE
CONN	CONNECTING
CONSTR	CONSTRUCT
CONT	CONTINUED/CONTINUATION
COORD	COORDINATE
CORP	CORPORATION
CPLG	COUPLING
CPP	CORRUGATED PLASTIC PIPE
CR	COUNTY ROAD
CSG	CASING
CSU	COLORADO SPRINGS UTILITIES
CTR	CENTER
CU	CUBIC
CULV	CULVERT
D	STORM DRAIN, DIAMETER
DET	DETAIL
DI	DROP INLET, DUCTILE IRON
DIA	DIAMETER
DIP	DUCTILE IRON PIPE
DIR	DIRECTION
DIST	DISTANCE
DPS	DIVIDE PUMP STATION
DR	DRAIN
DWG	DRAWING
E	EAST, ELECTRIC
EA	EACH
ECC	ECCENTRIC
ECR	END CURB RETURN
EL	ELEVATION
ELB, ELL	ELBOW
EMBED	EMBEDDED
ENGR	ENGINEER
EOP	EDGE OF PAVEMENT
EQ	EQUATION
EQL	EQUAL
EQPT	EQUIPMENT
EW	EACH WAY
EWEF	EACH WAY EACH FACE
EXC	EXCAVATE
EXP	EXPOSED, EXPANSION
EXST, EX	EXISTING
EY	EXPRESSWAY
FBO	FURNISHED BY OTHERS
FC	FLEXIBLE COUPLING
FCA	FLEXIBLE COUPLING ADAPTOR
FE	FIELD EXPLORATION
FG	FINISH GRADE
FHY	FIRE HYDRANT
FL	FLOWLINE
FLEX	FLEXIBLE
FLG	FLANGE, FLANGED
FLL, FL	FLOW LINE
FOT	FLAT ON TOP
FPT	FEMALE PIPE THREAD
FRP	FIBERGLASS REINFORCED PLASTIC
FPS	FOOT PER SECOND
FT	FOOT OR FEET
FTG	FOOTING
FUT	FUTURE
FW	FINISHED WATER LINE
G	GAS MAIN
GA	GAGE
GAL	GALLON
GALV	GALVANIZED
GB	GRADE BREAK
GND, GRND	GROUND
GS	GAS SERVICE LINE
GV	GATE VALVE
GVL	GRAVEL
HBP	HOT BITUMINOUS PAVING
HCL	HORIZONTAL CONTROL LINE
HDR	HEADER
HERCP	HORIZONTAL ELLIPTICAL REINFORCED CONCRETE PIPE
HG	HYDRAULIC GRADIENT
HGL	HYDRAULIC GRADE LINE
HORIZ	HORIZONTAL
HP	HIGH POINT
HYD	HYDRANT
ID	INSIDE DIAMETER
I.E.	INVERT ELEVATION
IN.	INCH
INV	INVERT
IP	IRON PIPE
IRR	IRRIGATION
JT	JOINT
L	LEFT, ANGLE, LENGTH
LAT'L	LATERAL
LF	LINEAR FEET
LG	LENGTH
LHSP	LOWER HOMESTAKE PIPELINE
LHSPP	LOWER HOMESTAKE PARALLEL PIPELINE
LP	LOW POINT
L-R	LEFT TO RIGHT
LT	LEFT
MATL	MATERIAL
MAX	MAXIMUM
MGD	MILLION GALLONS PER DAY
MTP	MAIN TRANSMISSION PIPELINE
MFR	MANUFACTURER
MH	MANHOLE
MIN	MINIMUM, MINUTE
MISC	MISCELLANEOUS
MON	MONUMENT
MTR	METER
N	NORTH
NA	NOT APPLICABLE
NIC	NOT IN CONTRACT
NO., #	NUMBER, NUMBERING
NOM	NOMINAL
NPT	NATIONAL PIPE THREAD
NTS	NOT TO SCALE
OC	ON CENTER
OD	OUTSIDE DIAMETER
OG	ORIGINAL GROUND
OH	OVERHEAD
OPNG	OPENING
ORIG	ORIGINAL
OSHA	OCCUPATIONAL SAFETY AND HEALTH ADMINISTRATION OR ACT
PE	PERMANENT EASEMENT
PC	POINT OF CURVE
PCC	POINT OF COMPOUND CURVE
PERM	PERMANENT
PH	POTHOLE LOCATION
PI	POINT OF INTERSECTION
PL	PROPERTY LINE, PLATE
POB	POINT OF BEGINNING
POC	POINT ON CURVE
POE	POINT OF END
PP	POWER POLE
PRC	POINT OF REVERSE CURVE
PREFAB	PREBAFRICATED
PRO	PROPOSED
PS	PUMPING STATION
PSI	POUNDS PER SQUARE INCH
PT	POINT OF TANGENCY
PVMT	PAVEMENT
PP	POWER POLE
PVC	POLYVINYL CHLORIDE
R	
RAD	RADIUS
RCB	REINFORCED CONCRETE BOX
RCP	REINFORCED CONCRETE PIPE
RCPA	REINFORCED CONCRETE PIPE ARCH
RD	ROAD, RECORD DRAWING
RDCR	REDUCER
REINF	REINFORCE
REF	REFER OR REFERENCE
REM	REMOVED
REQD	REQUIRED
RH	RODHOLE
RNST/RJ	RESTRAINED JOINT
RP	RADIUS POINT
RR	RAILROAD
RT	RIGHT
R/W, ROW	RIGHT-OF-WAY
RW	RAW WATER
S	SOUTH, SLOPE
SAN, S	SANITARY SEWER MAIN
SB	SOIL BORING LOCATION
SCFM	STANDARD CUBIC FEET PER MINUTE
SCH	SCHEDULE
SD	STORM DRAIN
SE	SEWAGE EFFLUENT
SERV	SERVICE
SH	SHEET
SIG	SIGNAL
SIM	SIMILAR
SLP	SLOPE
SPEC	SPECIFICATIONS
SPRR	SOUTHERN PACIFIC RAILROAD
SS	SANITARY SEWER
SST, SS	STAINLESS STEEL
STA	STATION
STD	STANDARD
STL	STEEL
STRUCT	STRUCTURE
SYMM	SYMMETRICAL
Tt	TANGENT, TELEPHONE, THICKNESS
TBM	TEMPORARY BENCHMARK
TC	TOP OF CURB
TCE	TEMPORARY CONSTRUCTION EASEMENT
TEL	TELEPHONE
TEMP	TEMPORARY
TO	TOP OF
TOP	TOP OF PIPE
TOPO	TOPOGRAPHY
TP	TEST PIT
TRANS	TRANSITION
TV	TELEVISION
TYP	TYPICAL
UG	UNDERGROUND
UNO	UNLESS NOTED OTHERWISE
UT	ULTRASONIC TESTING
V	VALVE, VENT
VB	VERTICAL BEND
VC	VERTICAL CURVE
VCP	VITRIFIED CLAY PIPE
VERT	VERTICAL
VPI	VERTICAL POINT OF INTERSECTION
VV	VACUUM VALVE
W	WATER, WEST
W/	WITH
WM	WATER METER
WS	WATER SURFACE, WATER STOP, WA˜ER SERVICE
WSP	WELDED STEEL PIPE
W/O	WITHOUT
WSEL	WATER SURFACE ELEVATION
WT	WEIGHT
WTP	WATER TREATMENT PLANT

GENERAL NOTES

1. EXISTING UTILITY LOCATIONS SHOWN ON THE PLANS ARE PLOTTED FROM THE BEST AVAILABLE INFORMATION AND ARE NOT NECESSARILY THE ACTUAL LOCATIONS. OVERHEAD UTILITIES MAY NOT BE SHOWN. VERIFY ALL UTILITIES PRIOR TO CONSTRUCTION WHETHER SHOWN ON THESE PLANS OR NOT. COORDINATE POWER POLE SUPPORT AND RELOCATION WITH THE UTILITY OWNERS.
2. ALL EXISTING UTILITIES SHALL BE PROTECTED IN PLACE UNLESS SPECIFICALLY SHOWN TO BE REMOVED, REPLACED, AND/OR RELOCATED.
3. PROTECT EXISTING TREES AND SHRUBS NOT DESIGNATED TO BE REMOVED.
4. PRESERVE EXISTING MONUMENTS, BENCH MARKS, RANGE TIES, PROPERTY MARKERS, REFERENCE POINTS, AND STAKES.
5. DISPOSE OF ITEMS TO BE DEMOLISHED OR REMOVED AND ALL CONSTRUCTION DEBRIS OFF SITE.
6. PROTECT EXISTING SURFACE IMPROVEMENTS NOT DESIGNATED FOR DEMOLITION OR FOR REMOVAL AND REPLACEMENT. RESTORE DAMAGED EXISTING IMPROVEMENTS AND THOSE IMPROVEMENTS THAT HAVE BEEN REMOVED OR TEMPORARILY RELOCATED TO A CONDITION EQUAL TO OR BETTER THAN PRIOR TO CONSTRUCTION.
7. STATIONING AND DISTANCES SHOWN ON THE DRAWINGS ARE BASED ON HORIZONTAL MEASUREMENTS. CROSS SECTION, CROSSING DETAILS, AND REFERENCES TO LEFT AND RIGHT ON THE DRAWINGS ASSUME LOOKING IN THE DIRECTION OF INCREASING STATION ALONG PIPELINE ALIGNMENT.
8. UNLESS OTHERWISE NOTED, PIPE ELEVATIONS SHOWN ARE INVERT ELEVATIONS.
9. UNLESS OTHERWISE SHOWN, KEEP CONSTRUCTION ACTIVITIES WITHIN THE RIGHT-OR-WAY AND EASEMENTS OBTAINED FOR THIS PROJECT. THIS INCLUDES, BUT IS NOT LIMITED TO, VEHICLES AND EQUIPMENT, LIMITS OF TRENCH EXCAVATION, AND STOCKPILED EXCAVATION MATERIAL AND BACKFILL MATERIAL.
10. REPLACE ANY EXISTING CULVERTS DAMAGED BY CONSTRUCTION.
11. DATE OF AERIAL PHOTOGRAPHY: DECEMBER 26, 2002
    AERIAL SURVEY: AERIAL SURVEYS INTERNATIONAL LLC, IN WATKINS, CO.

    GROUND SURVEY: CH2M HILL, ROCKY MOUNTAIN LAND SERVICES AND JR ENGINEERING
    HORIZONTAL DATUM IS COLORADO MODIFIED STATE PLANE COORDINATES, NAD83/86, CENTRAL ZONE
    VERTICAL DATUM IS THE NGVD 1929,
    UNITS ARE IN U.S. SURVEY FEET

11. VERIFY HORIZONTAL AND VERTICAL CONTROL HAS NOT BEEN DISTURBED. CONFIRM ALL CONTROL POINTS PRIOR TO THE START OF CONSTRUCTION.
12. AT LEAST TWO WORKING DAYS PRIOR TO EXCAVATION, THE DESIGN/BUILDER SHALL CONTACT THE UTILITY NOTIFICATION CENTER OF COLORADO (UNCC) AT (800) 922-1987.
13. LAY PIPE TO UNIFORM GRADE BETWEEN INDICATED ELEVATION POINTS.

NON-POTABLE WATER GENERAL NOTES

1. THE COLORADO SPRINGS UTILITIES DOES NOT GUARANTEE NONPOTABLE WATER TO THE SUBJECT AREA. ALLOCATION OF NONPOTABLE WATER TO SERVE THIS AREA WILL DEPEND UPON THE SUPPLY AVAILABLE AT THE TIME OF APPLICATION. THE COLORADO SPRINGS UTILITIES' POLICY IS FIRST COME FIRST-SERVED.
2. NOTE: CORROSION PROTECTION REQUIRED

   ALL DUCTILE IRON PIPE, TO INCLUDE FITTINGS AND VALVES WILL BE WRAPPED WITH POLYETHYLENE TUBING BONDED AT EACH JOINT AND ELECTRONICALLY ISOLATED AS SPECIFIED IN THE COLORADO SPRINGS UTILITIES STANDARD SPECIFICATIONS.

   INSULATING COUPLINGS OR FLANGES AND TEST STATIONS SHALL BE INSTALLED WHERE INDICATED.

   MAGNESIUM ANODES SHALL BE INSTALLED WHENEVER AN (A) IS INDICATED ON THIS PLAN AND AT ALL REVERSE ANCHORS AND/OR PLUGS. ALL ANODES WILL BE FURNISHED BY THE CORROSION CONTROL DEPARTMENT AND INSTALLED BY THE CONTRACTOR. 24-HOUR NOTICE IS REQUIRED.
3. THE CONTRACTOR IS REQUIRED TO NOTIFY COLORADO SPRINGS UTILITIES PIPELINE INSPECTION OFFICE, 2 WORKING DAYS PRIOR TO BEGINNING CONSTUCTION. IF THIS PROJECT INVOLVES A TAP, DO NOT CALL TO SCHEDULE THE TAP UNTIL THE PIPELINE INSPECTION NOTIFICATION HAS BEEN GIVEN.
4. ALL BENDS SHALL BE FIELD STAKED PRIOR TO CONSTRUCTION.
5. ALL NONPOTABLE WATER PIPING, VALVES, OUTLETS AND FIXTURES, AND OTHER APPURTENANCES SHALL BE COLOR CODED IN CONFORMANCE WITH THE NATIONAL INDUSTRIAL COLOR CODE AS FOLLOWS: ALL NEW BURIED DISTRIBUTION PIPING IN THE NONPOTABLE WATER DISTRIBUTION SYSTEM SHALL BE COLORED PURPLE PIPE, PANTONE 522, AND EMBOSSED OR BE STAMPED/MARKED "CAUTION-NONPOTABLE WATER DO NOT DRINK"; OR BE INSTALLED WITH A PURPLE IDENTIFICATION TAPE, OR A PURPLE POLYETHYLENE VINYL WRAP, COLOR TO BE PANTONE 512, OR AS OTHERWISE APPROVED BY THE COLORADO SPRINGS UTILITIES.

COLORADO REGISTERED MARK ROSSER 32181 07-09-04 PROFESSIONAL ENGINEER

RECORD DRAWINGS

Revisions Drawn By BCLEGG Date JULY 2004

THESE RECORD DRAWINGS HAVE BEEN PREPARED, IN PART, ON THE BASIS OF INFORMATION COMPILED BY OTHERS. THEY ARE NOT INTENDED TO REPRESENT IN DETAIL THE EXACT LOCATION, TYPE OF COMPONENT NOR MANNER OF CONSTRUCTION. THE ENGINEER WILL NOT BE RESPONSIBLE FOR ANY ERRORS OR OMISSIONS WHICH HAVE BEEN INCORPORATED INTO THE RECORD DRAWINGS.

REUSE OF DOCUMENTS: THIS DOCUMENT, AND THE IDEAS AND DESIGNS INCORPORATED HEREIN, AS AN INSTRUMENT OF PROFESSIONAL SERVICE, IS THE PROPERTY OF CH2M HILL AND IS NOT TO BE USED, IN WHOLE OR IN PART, FOR ANY OTHER PROJECT WITHOUT THE WRITTEN AUTHORIZATION OF CH2MHILL.
©CH2M HILL

integra engineering
450 DECATUR STREET
Denver, Colorado 80204 (303)825-1802

DSGN	W CHRISTOFFERSON
DR	M MONAHAN
CHK	G SIMPSON
APVD	M ROSSER

NO.	DATE	REVISION	BY	APVD

VERIFY SCALE
BAR IS ONE INCH ON ORIGINAL DRAWING.
0 1"
IF NOT ONE INCH ON THIS SHEET, ADJUST SCALES ACCORDINGLY.

CH2MHILL
Denver, CO 80112

Colorado Springs Utilities
It's how we're all connected

SOUTHWEST NON POTABLE WATER PIPELINE PROJECT PHASE 2

GENERAL
BEAR CREEK PIPELINE ABBREVIATIONS AND GENERAL NOTES

SHEET	6
DWG	G-6
DATE	JULY 2004
PROJ	279649.TP.DE.BC

Colorado Springs Utilities Project No. 394245, Work Order No. 1152273, Colorado Springs Utilities Contract No. 200303829 MAP NO. : SOUTHWEST QUADRANT

FILENAME: brckg07.dlv PLOT DATE: 30-JUN-2004 PLOT TIME: 16:28:33

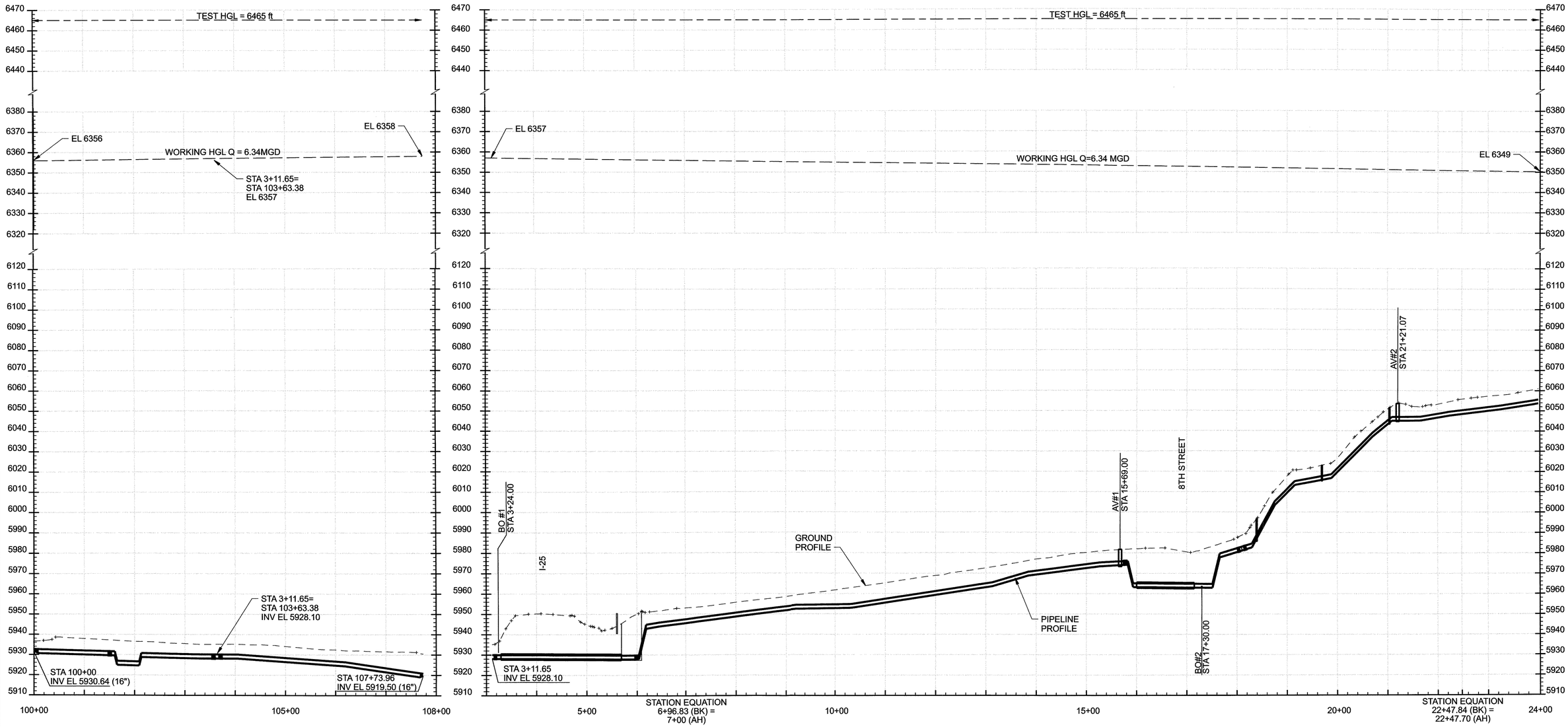

RECORD DRAWINGS

Revisions Drawn By BCLEGG Date JULY 2004

THESE RECORD DRAWINGS HAVE BEEN PREPARED, IN PART, ON THE BASIS OF INFORMATION COMPILED BY OTHERS. THEY ARE NOT INTENDED TO REPRESENT IN DETAIL THE EXACT LOCATION, TYPE OF COMPONENT NOR MANNER OF CONSTRUCTION. THE ENGINEER WILL NOT BE RESPONSIBLE FOR ANY ERRORS OR OMISSIONS WHICH HAVE BEEN INCORPORATED INTO THE RECORD DRAWINGS.

COLORADO REGISTERED PROFESSIONAL ENGINEER 32181 07-09-04

REUSE OF DOCUMENTS: THIS DOCUMENT, AND THE IDEAS AND DESIGNS INCORPORATED HEREIN, AS AN INSTRUMENT OF PROFESSIONAL SERVICE, IS THE PROPERTY OF CH2M HILL AND IS NOT TO BE USED, IN WHOLE OR IN PART, FOR ANY OTHER PROJECT WITHOUT THE WRITTEN AUTHORIZATION OF CH2MHILL.

©CH2M HILL

integra engineering
450 DECATUR STREET
Denver, Colorado 80204 (303)825-1802

DSGN	W CHRISTOFFERSON
DR	M MONAHAN
CHK	G SIMPSON
APVD	M ROSSER

NO.	DATE	REVISION	BY	APVD

VERIFY SCALE
BAR IS ONE INCH ON ORIGINAL DRAWING.
0 1"
IF NOT ONE INCH ON THIS SHEET, ADJUST SCALES ACCORDINGLY.

CH2MHILL
Denver, CO 80112

Colorado Springs Utilities
It's how we're all connected

SOUTHWEST NON POTABLE WATER PIPELINE PROJECT PHASE 2

GENERAL
BEAR CREEK PIPELINE
HYDRAULIC PROFILE
STA 100+00 TO STA 107+73.96
AND STA 3+11.65 TO 24+00

SHEET	7
DWG	G-7
DATE	JULY 2004
PROJ	279649.TP.DE.BC

FILENAME: brckhy01.dlv PLOT DATE: 30-JUN-2004 PLOT TIME: 11:52:22

Colorado Springs Utilities Project No. 394245, Work Order No. 1152273, Colorado Springs Utilities Contract No. 200303829 MAP NO. : SOUTHWEST QUADRANT

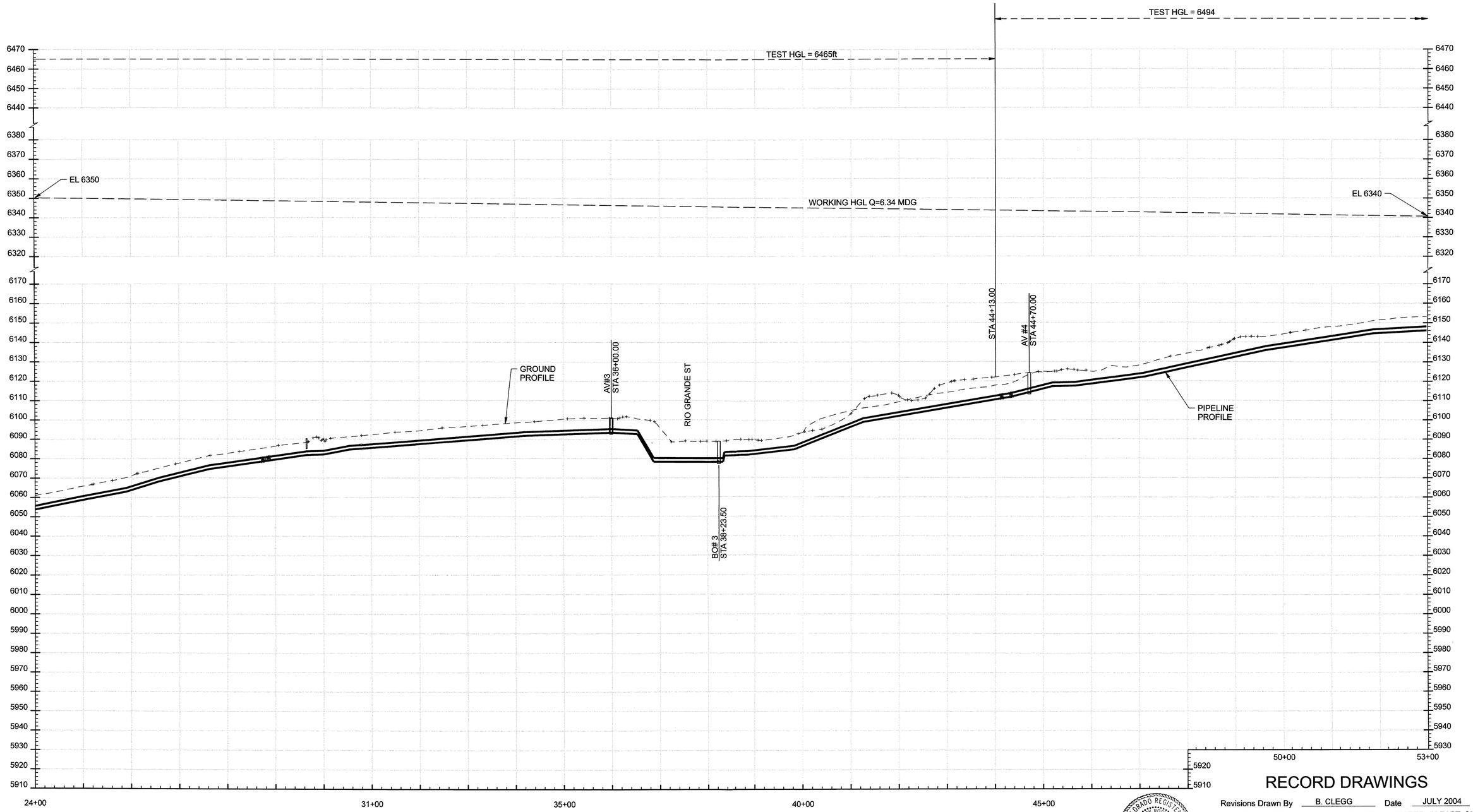

RECORD DRAWINGS

Revisions Drawn By B. CLEGG Date JULY 2004

THESE RECORD DRAWINGS HAVE BEEN PREPARED, IN PART, ON THE BASIS OF INFORMATION COMPILED BY OTHERS. THEY ARE NOT INTENDED TO REPRESENT IN DETAIL THE EXACT LOCATION, TYPE OF COMPONENT NOR MANNER OF CONSTRUCTION. THE ENGINEER WILL NOT BE RESPONSIBLE FOR ANY ERRORS OR OMISSIONS WHICH HAVE BEEN INCORPORATED INTO THE RECORD DRAWINGS.

COLORADO REGISTERED PROFESSIONAL ENGINEER 32181 07-09-04

REUSE OF DOCUMENTS: THIS DOCUMENT, AND THE IDEAS AND DESIGNS INCORPORATED HEREIN, AS AN INSTRUMENT OF PROFESSIONAL SERVICE, IS THE PROPERTY OF CH2M HILL AND IS NOT TO BE USED, IN WHOLE OR IN PART, FOR ANY OTHER PROJECT WITHOUT THE WRITTEN AUTHORIZATION OF CH2MHILL.
©CH2M HILL

integra engineering
450 DECATUR STREET
Denver, Colorado 80204 (303)825-1802

DSGN	W CHRISTOFFERSON
DR	M MONAHAN
CHK	G SIMPSON
APVD	M ROSSER

NO.	DATE	REVISION	BY	APVD

VERIFY SCALE
BAR IS ONE INCH ON ORIGINAL DRAWING.
0 1"
IF NOT ONE INCH ON THIS SHEET, ADJUST SCALES ACCORDINGLY.

CH2MHILL
Denver, CO 80112

Colorado Springs Utilities
It's how we're all connected

SOUTHWEST NON POTABLE WATER PIPELINE PROJECT PHASE 2

GENERAL
BEAR CREEK PIPELINE
HYDRAULIC PROFILE
STA 24+00 TO STA 53+00

SHEET	8
DWG	G-8
DATE	JULY 2004
PROJ	279649.TP.DE.BC

Colorado Springs Utilities Project No. 394245, Work Order No. 1152273, Colorado Springs Utilities Contract No. 200303829 MAP NO. : SOUTHWEST QUADRANT

FILENAME: brckhy02.dlv PLOT DATE: 30-JUN-2004 PLOT TIME: 11:48:41

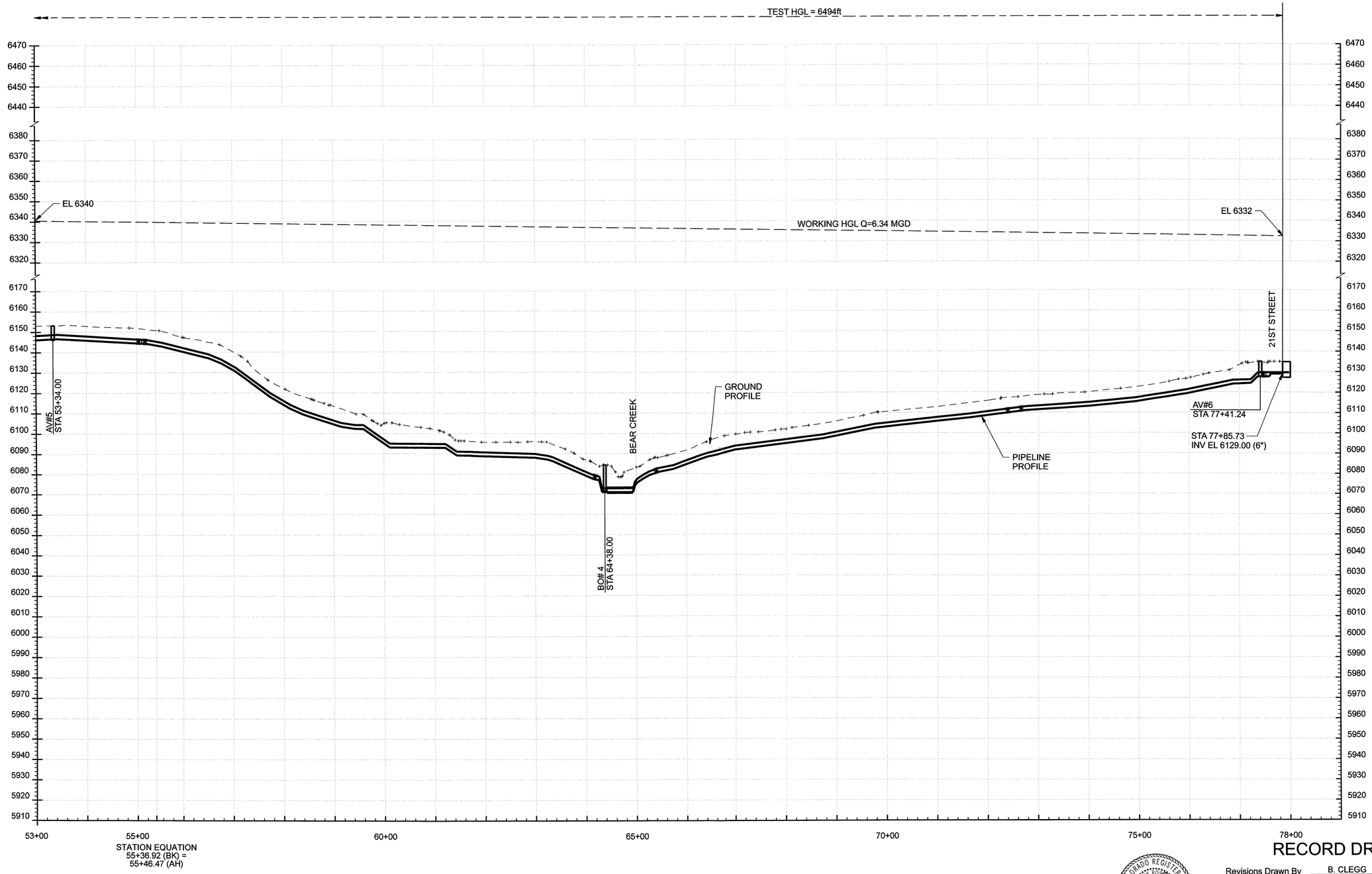

RECORD DRAWINGS

Revisions Drawn By B. CLEGG Date JULY 2004

THESE RECORD DRAWINGS HAVE BEEN PREPARED, IN PART, ON THE BASIS OF INFORMATION COMPILED BY OTHERS. THEY ARE NOT INTENDED TO REPRESENT IN DETAIL THE EXACT LOCATION, TYPE OF COMPONENT NOR MANNER OF CONSTRUCTION. THE ENGINEER WILL NOT BE RESPONSIBLE FOR ANY ERRORS OR OMISSIONS WHICH HAVE BEEN INCORPORATED INTO THE RECORD DRAWINGS.

COLORADO REGISTERED PROFESSIONAL ENGINEER 32181 07-09-04

REUSE OF DOCUMENTS: THIS DOCUMENT, AND THE IDEAS AND DESIGNS INCORPORATED HEREIN, AS AN INSTRUMENT OF PROFESSIONAL SERVICE, IS THE PROPERTY OF CH2M HILL AND IS NOT TO BE USED, IN WHOLE OR IN PART, FOR ANY OTHER PROJECT WITHOUT THE WRITTEN AUTHORIZATION OF CH2MHILL.
©CH2M HILL

integra engineering
450 DECATUR STREET
Denver, Colorado 80204 (303)825-1802

DSGN	W CHRISTOFFERSON
DR	M MONAHAN
CHK	G SIMPSON
APVD	M ROSSER

NO.	DATE	REVISION	BY	APVD

VERIFY SCALE
BAR IS ONE INCH ON ORIGINAL DRAWING.
0 1"
IF NOT ONE INCH ON THIS SHEET, ADJUST SCALES ACCORDINGLY.

CH2MHILL
Denver, CO 80112

Colorado Springs Utilities
It's how we're all connected

SOUTHWEST NON POTABLE WATER PIPELINE PROJECT PHASE 2

GENERAL
BEAR CREEK PIPELINE
HYDRAULIC PROFILE
STA 53+00 TO STA 77+85.73

SHEET	9
DWG	G-9
DATE	JULY 2004
PROJ	279649.TP.DE.BC

Colorado Springs Utilities Project No. 394245, Work Order No. 1152273, Colorado Springs Utilities Contract No. 200303829 MAP NO. : SOUTHWEST QUADRANT

FILENAME: brckhy03.dlv PLOT DATE: 30-JUN-2004 PLOT TIME: 11:57:58

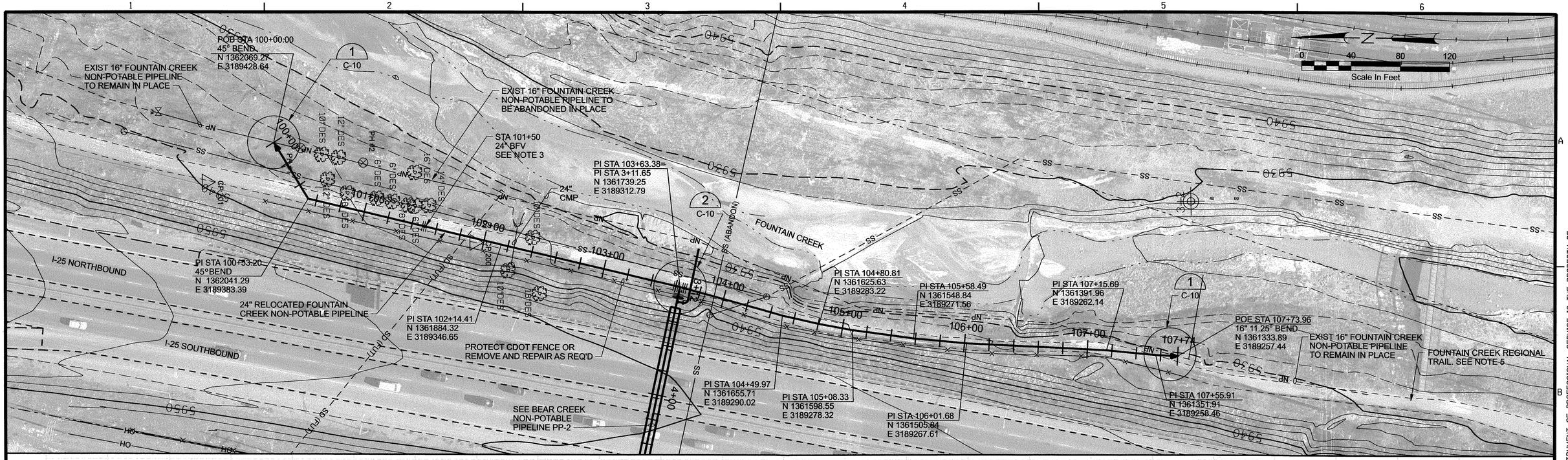

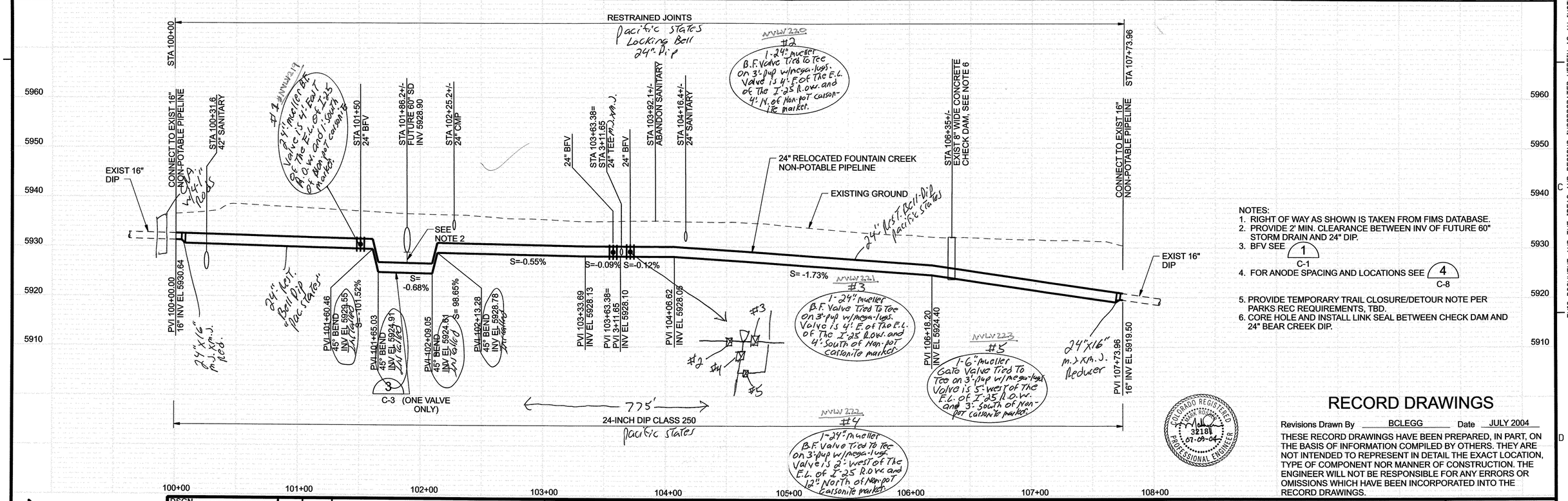

NOTES:
1. RIGHT OF WAY AS SHOWN IS TAKEN FROM FIMS DATABASE.
2. PROVIDE 2' MIN. CLEARANCE BETWEEN INV OF FUTURE 60" STORM DRAIN AND 24" DIP.
3. BFV SEE 1 / C-1
4. FOR ANODE SPACING AND LOCATIONS SEE 4 / C-8
5. PROVIDE TEMPORARY TRAIL CLOSURE/DETOUR NOTE PER PARKS REC REQUIREMENTS, TBD.
6. CORE HOLE AND INSTALL LINK SEAL BETWEEN CHECK DAM AND 24" BEAR CREEK DIP.

RECORD DRAWINGS

Revisions Drawn By BCLEGG Date JULY 2004

THESE RECORD DRAWINGS HAVE BEEN PREPARED, IN PART, ON THE BASIS OF INFORMATION COMPILED BY OTHERS. THEY ARE NOT INTENDED TO REPRESENT IN DETAIL THE EXACT LOCATION, TYPE OF COMPONENT NOR MANNER OF CONSTRUCTION. THE ENGINEER WILL NOT BE RESPONSIBLE FOR ANY ERRORS OR OMISSIONS WHICH HAVE BEEN INCORPORATED INTO THE RECORD DRAWINGS.

COLORADO REGISTERED PROFESSIONAL ENGINEER 32188 07-09-04

THIS DOCUMENT AND THE IDEAS AND DESIGNS INCORPORATED HEREIN, AS AN INSTRUMENT OF PROFESSIONAL SERVICE, IS THE PROPERTY OF CH2M HILL AND IS NOT TO BE USED, IN WHOLE OR IN PART, FOR ANY OTHER PROJECT WITHOUT THE WRITTEN AUTHORIZATION OF CH2M HILL.
©CH2M HILL
REUSE OF DOCUMENTS:

integra engineering
450 DECATUR STREET
Denver, Colorado 80204 (303)825-1802

DSGN	W CHRISTOFFERSON
DR	M MONAHAN
CHK	G SIMPSON
APVD	M ROSSER

NO.	DATE	REVISION	BY	APVD

VERIFY SCALE
BAR IS ONE INCH ON ORIGINAL DRAWING.
0 1"
IF NOT ONE INCH ON THIS SHEET, ADJUST SCALES ACCORDINGLY.

CH2MHILL
DENVER, CO 80112

Colorado Springs Utilities
It's how we're all connected

SOUTHWEST NON POTABLE WATER PIPELINE PROJECT PHASE 2

PLAN AND PROFILE
FOUNTAIN CREEK NON-POTABLE PIPELINE RELOCATION
POB 100+00.00 TO POE 107+73.96

SHEET 10
DWG PP-1
DATE JULY 2004
PROJ 279649.TP.DE.BC

Colorado Springs Utilities Project No. 394245, Work Order No. 1152273, Colorado Springs Utilities Contract No. 200303829 MAP NO. : SOUTHWEST QUADRANT

FILENAME: brckpp08.dlv PLOT DATE: 30-JUN-2004 PLOT TIME: 17:01:08

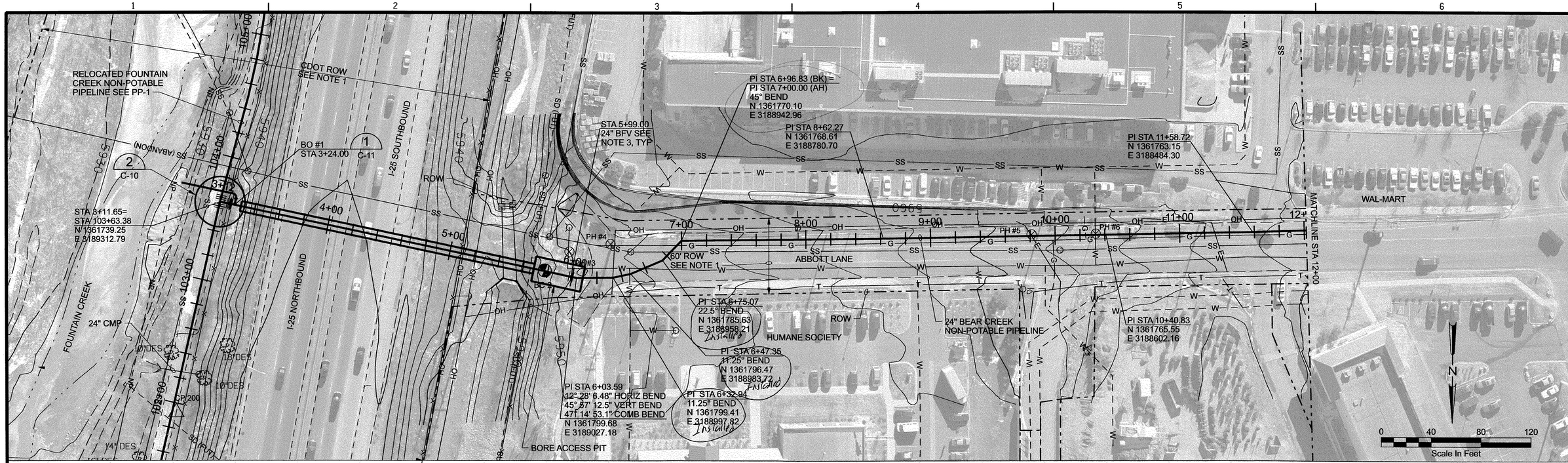

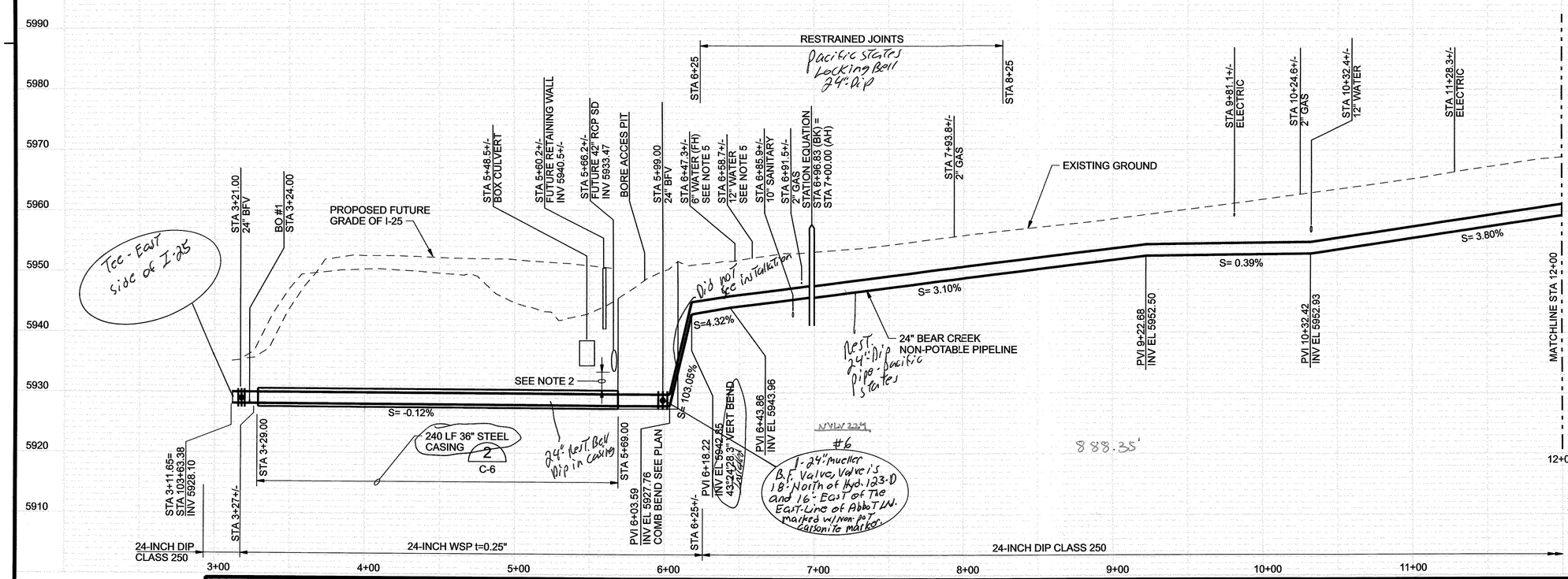

NOTE:
1. RIGHT OF WAY AS SHOWN IS TAKEN FROM FIMS DATABASE.
2. PROVIDE MIN 2' CLEARANCE BETWEEN INV OF FUTURE SD AND 24" DIP AND/OR 36" CASING PIPE.
3. BFV SEE 1 / C-1
4. FOR ANODE SPACING AND LOCATIONS SEE 4 / C-8
5. RELOCATE FIRE HYDRANT AS REQUIRED.

COLORADO REGISTERED PROFESSIONAL ENGINEER 32181 07-03-04

RECORD DRAWINGS

Revisions Drawn By B. CLEGG Date JULY 2004

THESE RECORD DRAWINGS HAVE BEEN PREPARED, IN PART, ON THE BASIS OF INFORMATION COMPILED BY OTHERS. THEY ARE NOT INTENDED TO REPRESENT IN DETAIL THE EXACT LOCATION, TYPE OF COMPONENT NOR MANNER OF CONSTRUCTION. THE ENGINEER WILL NOT BE RESPONSIBLE FOR ANY ERRORS OR OMISSIONS WHICH HAVE BEEN INCORPORATED INTO THE RECORD DRAWINGS.

REUSE OF DOCUMENTS: THIS DOCUMENT, AND THE IDEAS AND DESIGNS INCORPORATED HEREIN, AS AN INSTRUMENT OF PROFESSIONAL SERVICE, IS THE PROPERTY OF CH2M HILL AND IS NOT TO BE USED, IN WHOLE OR IN PART, FOR ANY OTHER PROJECT WITHOUT THE WRITTEN AUTHORIZATION OF CH2MHILL.
©CH2M HILL

integra engineering
450 DECATUR STREET
Denver, Colorado 80204 (303)825-1802

DSGN	W CHRISTOFFERSON
DR	M MONAHAN
CHK	G SIMPSON
APVD	M ROSSER

NO.	DATE	REVISION	BY	APVD

VERIFY SCALE
BAR IS ONE INCH ON ORIGINAL DRAWING.
0 1"
IF NOT ONE INCH ON THIS SHEET, ADJUST SCALES ACCORDINGLY.

CH2MHILL
DENVER, CO 80112

Colorado Springs Utilities
It's how we're all connected

SOUTHWEST NON POTABLE WATER PIPELINE PROJECT PHASE 2

PLAN AND PROFILE

BEAR CREEK ALIGNMENT
STA 3+11.65 TO STA 12+00

SHEET 11
DWG PP-2
DATE JULY 2004
PROJ 279649.TP.DE.BC

Colorado Springs Utilities Project No. 394245, Work Order No. 1152273, Colorado Springs Utilities Contract No. 200303829 MAP NO. : SOUTHWEST QUADRANT

FILENAME: brckpp01.dlv PLOT DATE: 30-JUN-2004 PLOT TIME: 14:41:08

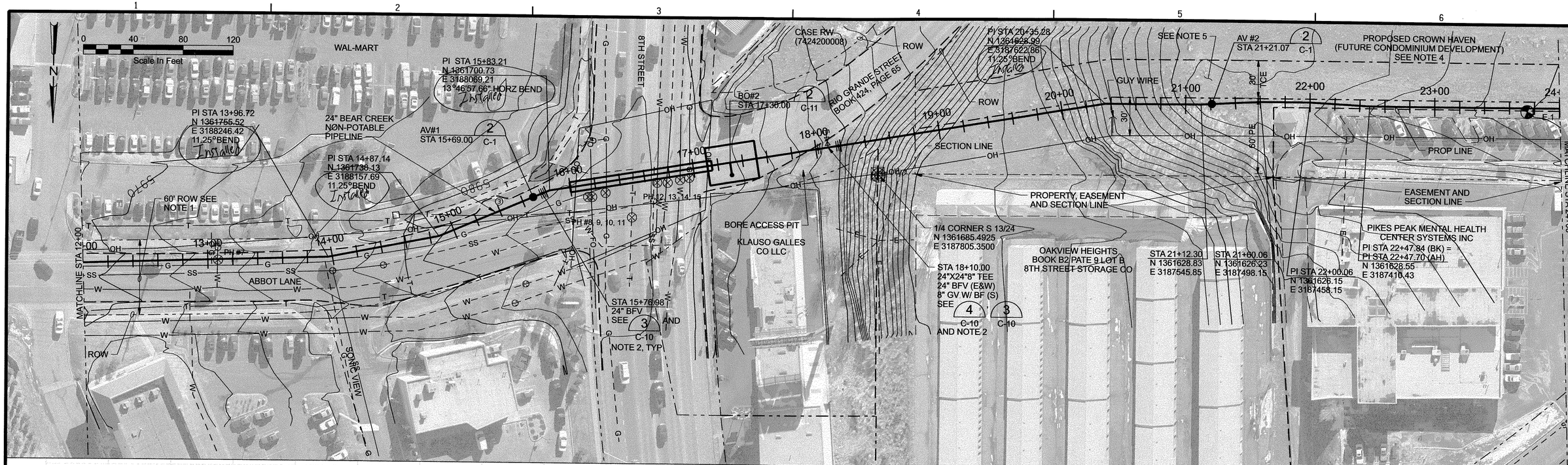

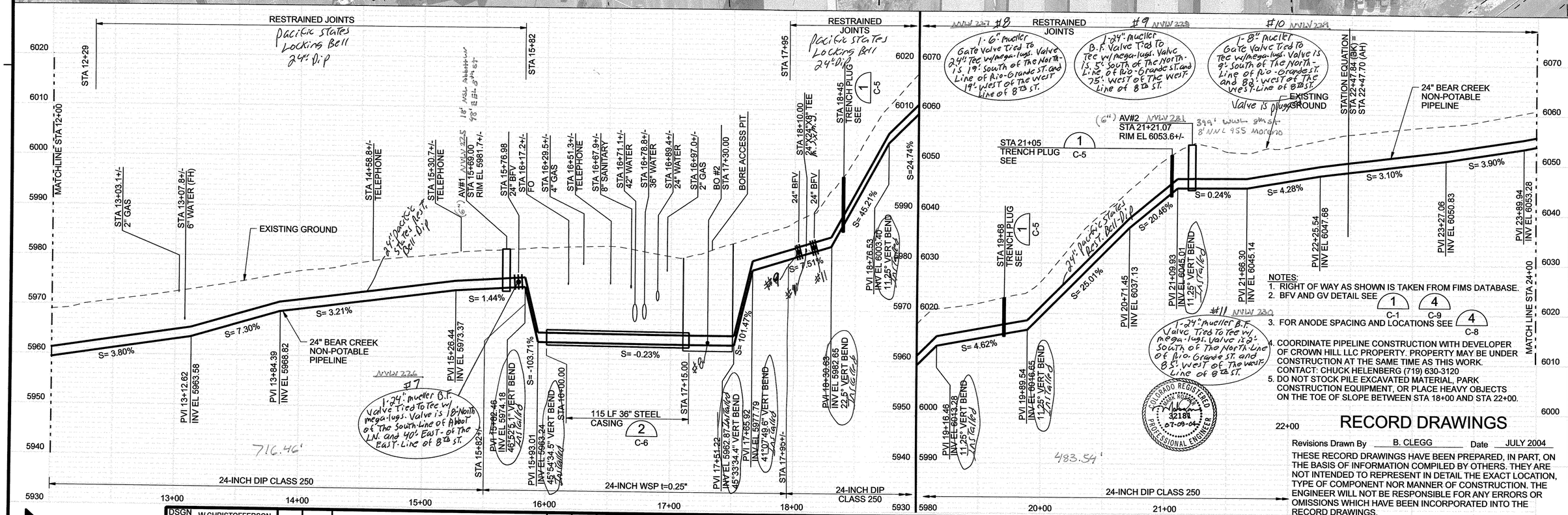

NOTES:
1. RIGHT OF WAY AS SHOWN IS TAKEN FROM FIMS DATABASE.
2. BFV AND GV DETAIL SEE 1 C-1 4 C-9
3. FOR ANODE SPACING AND LOCATIONS SEE 4 C-8
4. COORDINATE PIPELINE CONSTRUCTION WITH DEVELOPER OF CROWN HILL LLC PROPERTY. PROPERTY MAY BE UNDER CONSTRUCTION AT THE SAME TIME AS THIS WORK. CONTACT: CHUCK HELENBERG (719) 630-3120
5. DO NOT STOCK PILE EXCAVATED MATERIAL, PARK CONSTRUCTION EQUIPMENT, OR PLACE HEAVY OBJECTS ON THE TOE OF SLOPE BETWEEN STA 18+00 AND STA 22+00.

COLORADO REGISTERED PROFESSIONAL ENGINEER 32188 07-09-04

RECORD DRAWINGS

Revisions Drawn By B. CLEGG Date JULY 2004

THESE RECORD DRAWINGS HAVE BEEN PREPARED, IN PART, ON THE BASIS OF INFORMATION COMPILED BY OTHERS. THEY ARE NOT INTENDED TO REPRESENT IN DETAIL THE EXACT LOCATION, TYPE OF COMPONENT NOR MANNER OF CONSTRUCTION. THE ENGINEER WILL NOT BE RESPONSIBLE FOR ANY ERRORS OR OMISSIONS WHICH HAVE BEEN INCORPORATED INTO THE RECORD DRAWINGS.

REUSE OF DOCUMENTS: THIS DOCUMENT AND THE IDEAS AND DESIGNS INCORPORATED HEREIN AS AN INSTRUMENT OF PROFESSIONAL SERVICE, IS THE PROPERTY OF CH2M HILL AND IS NOT TO BE USED, IN WHOLE OR IN PART, FOR ANY OTHER PROJECT WITHOUT THE WRITTEN AUTHORIZATION OF CH2MHILL.
©CH2M HILL

integra engineering
450 DECATUR STREET
Denver, Colorado 80204 (303)825-1802

DSGN	W CHRISTOFFERSON
DR	M MONAHAN
CHK	G SIMPSON
APVD	M ROSSER

NO.	DATE	REVISION	BY	APVD

VERIFY SCALE
BAR IS ONE INCH ON ORIGINAL DRAWING.
0 1"
IF NOT ONE INCH ON THIS SHEET, ADJUST SCALES ACCORDINGLY.

CH2MHILL
DENVER, CO 80112

Colorado Springs Utilities
It's how we're all connected

SOUTHWEST NON POTABLE WATER PIPELINE PROJECT PHASE 2

PLAN AND PROFILE
BEAR CREEK ALIGNMENT
STA 12+00 TO STA 24+00

SHEET	12
DWG	PP-3
DATE	JULY 2004
PROJ	279649.TP.DE.BC

Colorado Springs Utilities Project No. 394245, Work Order No. 1152273, Colorado Springs Utilities Contract No. 200303829 MAP NO. : SOUTHWEST QUADRANT

FILENAME: brckpp02.dlv PLOT DATE: 01-JUL-2004 PLOT DATE: 08:37:05

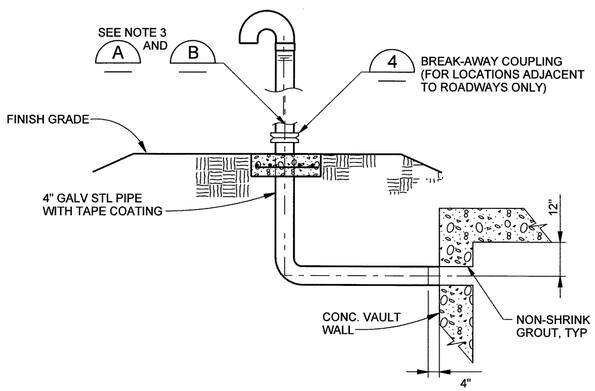

NOTES:

1. EPOXY PAINT ALL ABOVE GRADE SURFACES. COLOR TO BE SELECTED BY OWNER.

VENT 1
NTS

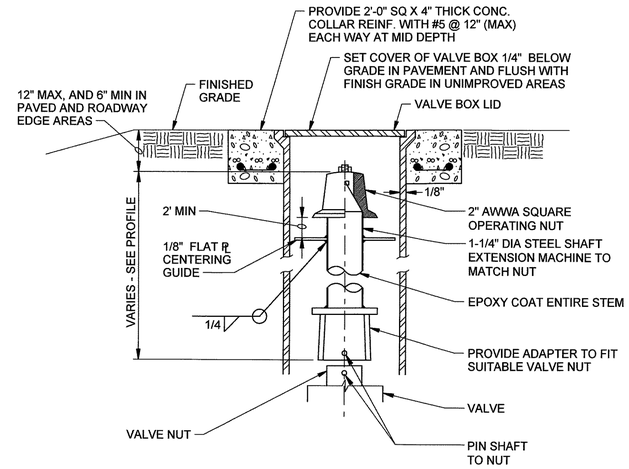

VALVE BOX/OPERATOR STEM 2
NTS

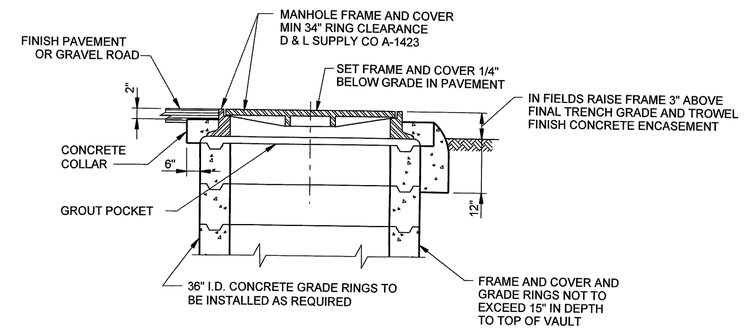

SECTION

MANHOLE FRAME AND COVER 3
NTS

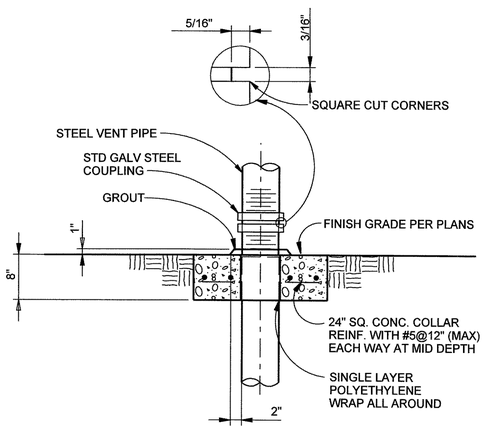

NOTES:

1. MOUND CONCRETE AROUND PIPE, TO PROVIDE DRAINAGE.
2. TROWEL FINISH ALL EXPOSED CONCRETE SURFACES.

BREAK-AWAY COUPLING 4
NTS

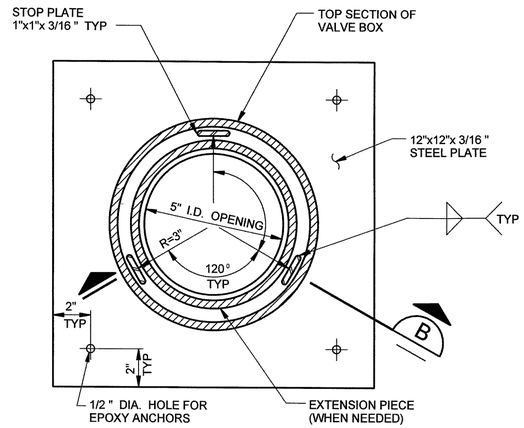

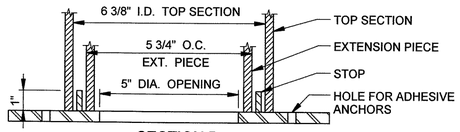

SECTION B

VALVE BOX SUPPORT PLATE 5
NTS

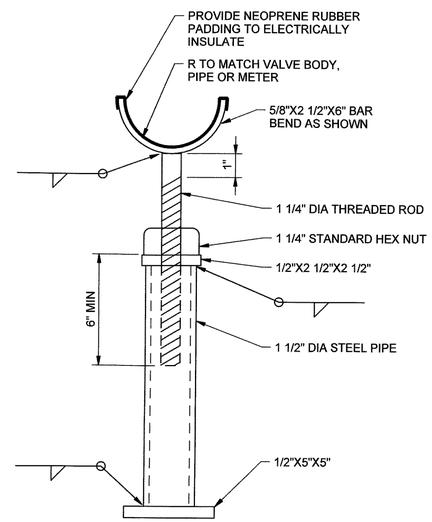

PIPE SUPPORT - ADJUSTABLE 7
NTS

COLORADO REGISTERED PROFESSIONAL ENGINEER
32181
01-09-04

RECORD DRAWINGS

Revisions Drawn By B. CLEGG Date JULY 2004

THESE RECORD DRAWINGS HAVE BEEN PREPARED, IN PART, ON THE BASIS OF INFORMATION COMPILED BY OTHERS. THEY ARE NOT INTENDED TO REPRESENT IN DETAIL THE EXACT LOCATION, TYPE OF COMPONENT NOR MANNER OF CONSTRUCTION. THE ENGINEER WILL NOT BE RESPONSIBLE FOR ANY ERRORS OR OMISSIONS WHICH HAVE BEEN INCORPORATED INTO THE RECORD DRAWINGS.

REUSE OF DOCUMENTS: THIS DOCUMENT AND THE IDEAS AND DESIGNS INCORPORATED HEREIN, AS AN INSTRUMENT OF PROFESSIONAL SERVICE, IS THE PROPERTY OF CH2M HILL AND IS NOT TO BE USED, IN WHOLE OR IN PART, FOR ANY OTHER PROJECT WITHOUT THE WRITTEN AUTHORIZATION OF CH2MHILL.
© CH2M HILL

integra engineering
450 DECATUR STREET
Denver, Colorado 80204 (303)825-1802

DSGN	W CHRISTOFFERSON
DR	M MONAHAN
CHK	G SIMPSON
APVD	M ROSSER

NO.	DATE	REVISION	BY	APVD

VERIFY SCALE
BAR IS ONE INCH ON ORIGINAL DRAWING.
0 1"
IF NOT ONE INCH ON THIS SHEET, ADJUST SCALES ACCORDINGLY.

CH2MHILL
Denver, CO 80112

Colorado Springs Utilities
It's how we're all connected

SOUTHWEST NON POTABLE WATER PIPELINE PROJECT PHASE 2

CIVIL DETAILS

BEAR CREEK PIPELINE APPURTENANCE DETAILS

SHEET	19
DWG	C-2
DATE	JULY 2004
PROJ	279649.TP.DE.BC

Colorado Springs Utilities Project No. 394245, Work Order No. 1152273, Colorado Springs Utilities Contract No. 200303829 MAP NO. : SOUTHWEST QUADRANT

FILENAME: brckdt01.dlv PLOT DATE: 30-JUN-2004 PLOT TIME: 16:30:04

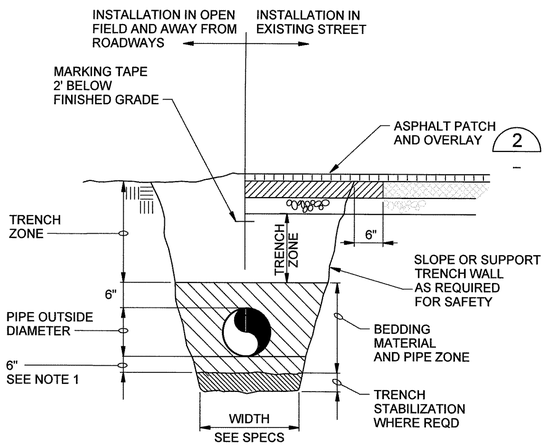

NOTE:
1. INCREASE BEDDING BELOW PIPE TO 12" OVER EXCAVATED ROCK.

TYPICAL TRENCH SECTION (1)
NTS

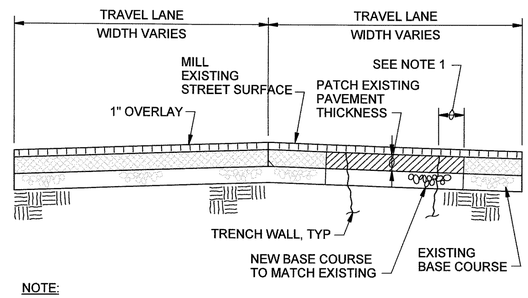

NOTE:
1. SAWCUT EXISTING PAVEMENT 6" BEYOND EDGE OF TRENCH TO PROVIDE A CLEAN VERTICAL CUT TO COMPLETE BITUMINOUS PATCH, TYP BOTH SIDES OF TRENCH

ASPHALT PATCH AND OVERLAY (2)
NTS

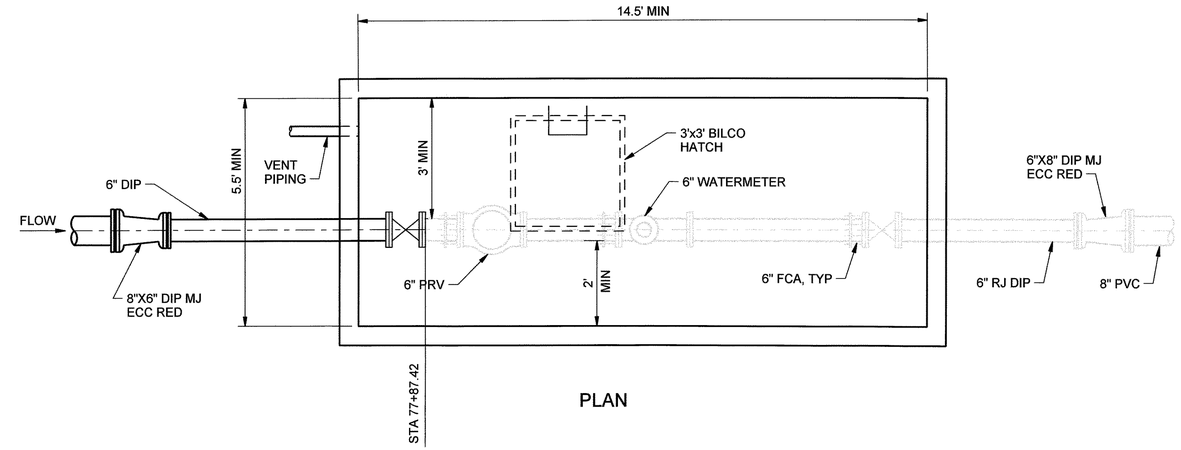

PLAN

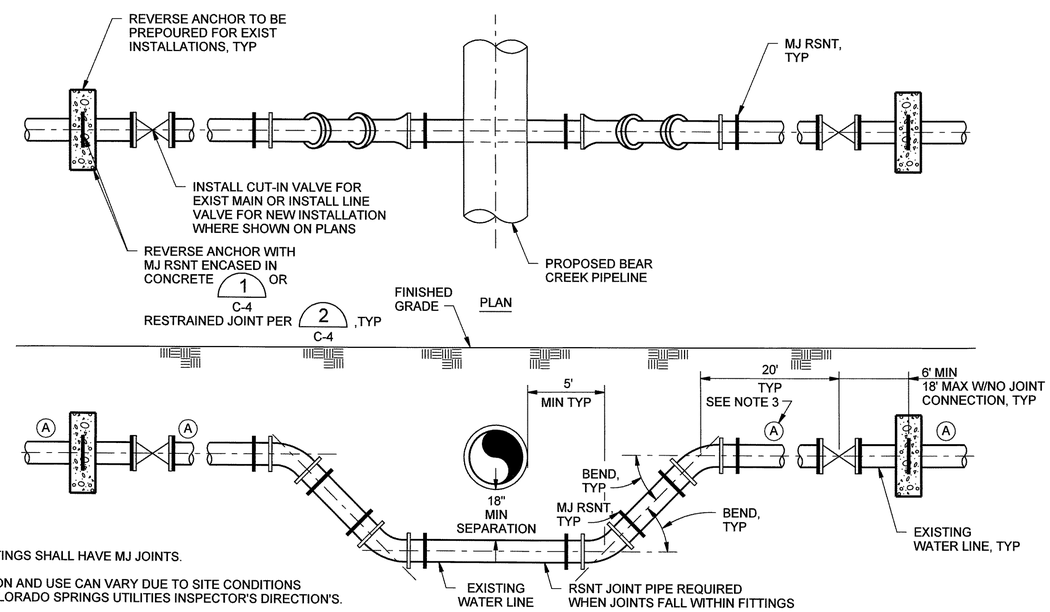

NOTES:
1. ALL FITTINGS SHALL HAVE MJ JOINTS.
2. LOCATION AND USE CAN VARY DUE TO SITE CONDITIONS AND COLORADO SPRINGS UTILITIES INSPECTOR'S DIRECTION'S.
3. INSTALL ANODES ON EACH SIDE OF VALVES (2) C-7.

ELEVATION

LOWERING DETAIL (3)
NTS

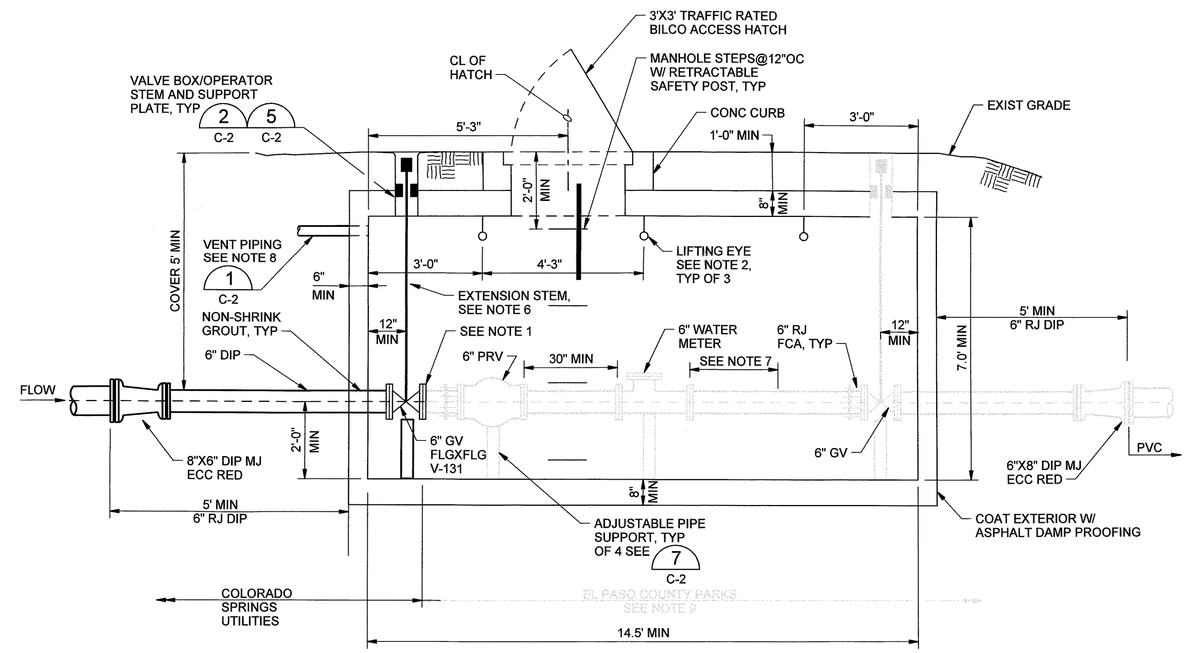

SECTION

NOTES:
1. INSTALL 6" BLIND FLANGE TO 6" GV.
2. CENTER LIFTING EYE OVER PIPE CL.
3. INSTALL METAL PIPE SUPPORTS UNDER 6" GV.
4. DESIGN PRECAST VAULT FOR AT REST LATERAL LENGTH PRESSURE COEFFICIENT OF 0.5 FOR BACKFILL AND A TOTAL UNIT WEIGHT OF 125 PCT.
5. DESIGN PRECAST VAULT AND BILCO HATCH FOR TRAFFIC LOADING OF HS-20.
6. EXTENSION STEM TO EXTEND ABOVE THE BOTTOM OF THE VALVE BOX.
7. FOR STRAINER INSTALLATION A MIN DISTANCE OF 18-INCHES IS REQUIRED BETWEEN THE WATER METER'S DOWNSTREAM FLANGE AND THE STRAINERS UPSTREAM FLANGE.
8. VENT SHALL NOT BE LOCATED WITHIN THE ROADWAY. LOCATE WITHIN EASEMENT. COORDINATE FINAL VENT LOCATION IN THE FIELD WITH ENGINEER.
9. SCREENED PIPING TO BE PROVIDED AND INSTALLED BY EL PASO COUNTY PARK DEPARTMENT.
10. JOINTS SHALL BE RESTRAINED.

BEAR CREEK PARK VAULT (4)
NTS PP-7

RECORD DRAWINGS

Revisions Drawn By B. CLEGG Date JULY 2004

THESE RECORD DRAWINGS HAVE BEEN PREPARED, IN PART, ON THE BASIS OF INFORMATION COMPILED BY OTHERS. THEY ARE NOT INTENDED TO REPRESENT IN DETAIL THE EXACT LOCATION, TYPE OF COMPONENT NOR MANNER OF CONSTRUCTION. THE ENGINEER WILL NOT BE RESPONSIBLE FOR ANY ERRORS OR OMISSIONS WHICH HAVE BEEN INCORPORATED INTO THE RECORD DRAWINGS.

COLORADO REGISTERED PROFESSIONAL ENGINEER 21181 07-09-04

REUSE OF DOCUMENTS: THIS DOCUMENT, AND THE IDEAS AND DESIGNS INCORPORATED HEREIN, AS AN INSTRUMENT OF PROFESSIONAL SERVICE, IS THE PROPERTY OF CH2M HILL AND IS NOT TO BE USED, IN WHOLE OR IN PART, FOR ANY OTHER PROJECT WITHOUT THE WRITTEN AUTHORIZATION OF CH2M HILL.
© CH2M HILL

integra engineering
450 DECATUR STREET
Denver, Colorado 80204 (303)825-1802

DSGN					
DR					
CHK					
APVD	NO.	DATE	REVISION	BY	APVD

VERIFY SCALE
BAR IS ONE INCH ON ORIGINAL DRAWING.
0 1"
IF NOT ONE INCH ON THIS SHEET, ADJUST SCALES ACCORDINGLY.

CH2MHILL
Denver, CO 80112

Colorado Springs Utilities
It's how we're all connected

SOUTHWEST NON POTABLE WATER PIPELINE PROJECT PHASE 2

CIVIL DETAILS
BEAR CREEK PIPELINE
TRENCH SECTION, ASPHALT, BEAR CREEK PARK VAULT, AND LOWERING DETAILS

SHEET	20
DWG	C-3
DATE	JULY 2004
PROJ	279649.TP.DE.BC

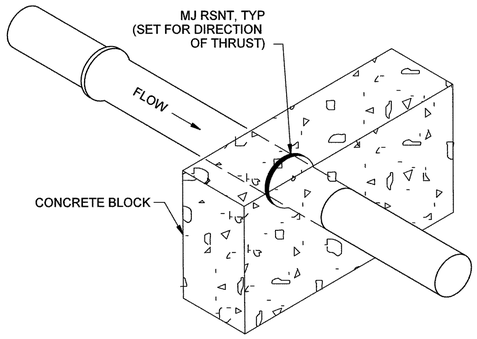

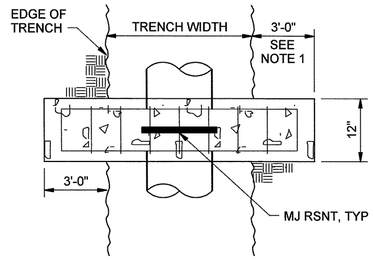

NOTE:

1. POUR INTO SOLID BANK OF TRENCH NOT LESS THAN 3'-0" TYP, 2 SIDES.

PLAN

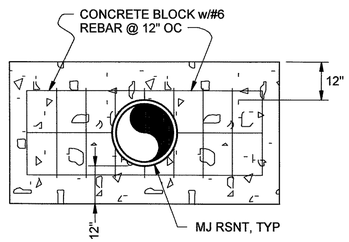

ELEVATION

REVERSE ANCHOR 1

NTS

BEARING AREA OF THRUST BLOCKS IN SQ. FT. (HORIZONTAL BENDS)							
FITTING SIZE	TEE, WYE, PLUG, OR CAP	90° BEND PLUGGED CROSS	TEE PLUGGED RUN		BEND ANGLE (DEGREES)		
			A1	A2	45°	22 1/2°	11 1/4°
4	1.0	1.4	1.9	1.4	1.0	-	-
6	2.1	3.0	4.3	3.0	1.6	1.0	-
8	3.8	5.3	7.6	5.4	2.9	1.5	1.0
10	5.9	8.4	11.8	8.4	4.6	2.4	1.2
12	8.5	12.0	17.0	12.0	6.6	3.4	1.7
14	11.5	16.3	23.0	16.3	8.9	4.6	2.3
16	15.0	21.3	30.0	21.3	11.6	6.0	3.0
18	19.0	27.0	38.0	27.0	14.6	7.6	3.8
20	23.5	33.3	47.0	33.3	18.1	9.4	4.7
24	34.0	48.0	68.0	48.0	26.2	13.6	6.8

VOLUME OF THRUST BLOCK IN CUBIC YARDS (VERTICAL BENDS)			
FITTING SIZE	BEND ANGLE (DEGREES)		
	45°	22 1/2°	11 1/4°
4	1.1	0.4	0.2
6	2.7	1.0	0.4
8	4.0	1.5	0.6
10	6.0	2.3	0.9
12	8.5	3.2	1.3
14	11.5	4.3	1.8
16	14.8	5.6	2.3

FITTING SIZE	ROD SIZE	EMBEDMENT
12"AND LESS	#6	30"
14"-16"	#8	36"

MASTIC COATED RODS OVER FITTING AND EMBEDDED IN CONCRETE (SEE TABLE FOR SIZES). COAT ENTIRE ROD PRIOR TO PLACING CONCRETE.

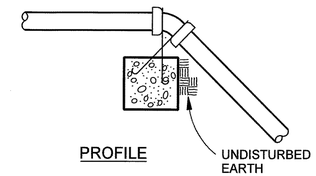

PROFILE

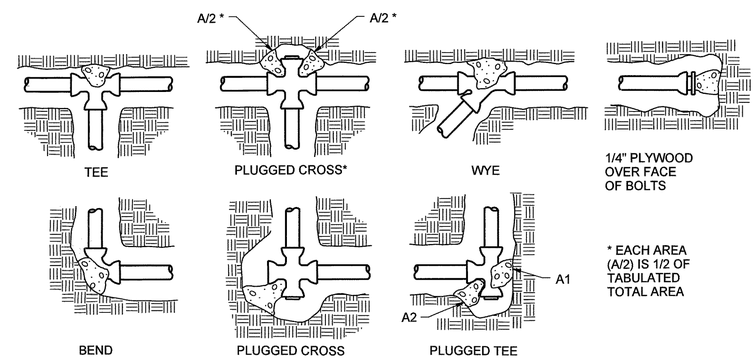

* EACH AREA (A/2) IS 1/2 OF TABULATED TOTAL AREA

TEST PRESSURE	PIPE DIAMETER	RESTRAINED LENGTH (feet)							
		TEE	24"x6" RED. TEE	24"x8" RED. TEE	VALVE OR BULKHEAD	BEND			
						90°	45°	22.5°	11.25°
235psi	6"	58	18	18	58	18	18	18	18
	24"	198			198	144	90	18	18
185psi	6"	46	18	18	46	18	18	18	18
	24"	156			156	100	42	18	18

NOTES:

1. RESTRAINED JOINT LENGTHS SHOWN ARE BASED ON TEST PRESSURE AND SOIL BEARING PRESSURE AS INDICATED IN THRUST BLOCK DETAIL.
2. SEE PLAN AND PROFILE SHEETS AND SPECIFICATIONS FOR ALLOWABLE THRUST RESTRAINT SYSTEMS AND INSTALLATION.

RESTRAINED JOINT CHART 2

NTS

THRUST BLOCK AND RESTRAINED LENGTH NOTES

1. KEEP CONCRETE CLEAR OF JOINT AND JOINT ACCESSORIES.
2. CONCRETE THRUST BLOCKING SHALL BE POURED AGAINST UNDISTURBED EARTH.
3. REQUIRED VOLUMES OR BEARING AREAS AT FITTINGS SHALL BE AS INDICATED, ADJUSTED, IF NECESSARY, TO CONFORM TO THE TEST PRESSURE(S) AND ALLOWABLE SOIL BEARING STRESS(ES) PROVIDED BY THE ENGINEER.
4. THRUST BLOCK VOLUMES FOR VERTICAL BENDS HAVING UPWARD RESULTANT THRUSTS ARE BASED ON TEST PRESSURE OF 150 PSIG AND THE WEIGHT OF CONCRETE = 4050 LBS/CU YD. TO COMPUTE VOLUMES FOR DIFFERENT TEST PRESSURES, USE THE FOLLOWING EQUATION: VOLUME = (TEST PRESS./150) x (TABLE VALUE).
5. BEARING AREAS FOR HORIZONTAL BEND THRUST BLOCKS ARE BASED ON TEST PRESSURE OF 150 PSIG AND AN ALLOWABLE SOIL BEARING STRESS OF 2000 LBS/SQ FT. TO COMPUTE BEARING AREAS FOR DIFFERENT TEST PRESSURES AND SOIL BEARING STRESSES, MULTIPLY TABLE VALUES BY THE FACTOR (13.33)(P'/S'b), WHERE: P' =ACTUAL TEST PRESSURE, PSIG
   S'b=ACTUAL ALLOWABLE SOIL BEARING PRESSURE, PSF.
6. THRUST BLOCKS FOR VERTICAL BENDS HAVING DOWNWARD RESULTANT THRUSTS SHALL BE THE SAME AS FOR HORIZONTAL BENDS.
7. BEARING AREAS, VOLUMES, AND SPECIAL BLOCKING DETAILS SHOWN ON DRAWINGS TAKE PRECEDENCE OVER THIS STANDARD
8. BEARING AREA OF THRUST BLOCK SHALL NOT BE LESS THAN 1.0 SQ FT.
9. VERTICAL BENDS THAT REQUIRE A THRUST BLOCK VOLUME EXCEEDING 5 CUBIC YARDS REQUIRE SPECIAL BLOCKING DETAILS. SEE DRAWINGS FOR VOLUMES SHOWN TO LEFT OF SOLID LINE IN TABLE.
10. INSTALL POLYETHENE WRAP AROUND DIP FITTINGS PRIOR TO PLACEMENT OF CONCRETE THRUST BLOCKS.
11. TEST PRESSURES AND ALLOWABLE SOIL BEARING PRESSURE ARE: BEAR CREEK PIPELINE

TEST PRESSURE	235 psi
ALLOWABLE SOIL BEDDING PRESSURE	2000 lbs/CF

THRUST BLOCK SIZING CHART 3

NTS

COLORADO REGISTERED PROFESSIONAL ENGINEER
MARK ROSSER
32181
07-09-04

RECORD DRAWINGS

Revisions Drawn By B. CLEGG Date JULY 2004

THESE RECORD DRAWINGS HAVE BEEN PREPARED, IN PART, ON THE BASIS OF INFORMATION COMPILED BY OTHERS. THEY ARE NOT INTENDED TO REPRESENT IN DETAIL THE EXACT LOCATION, TYPE OF COMPONENT NOR MANNER OF CONSTRUCTION. THE ENGINEER WILL NOT BE RESPONSIBLE FOR ANY ERRORS OR OMISSIONS WHICH HAVE BEEN INCORPORATED INTO THE RECORD DRAWINGS.

REUSE OF DOCUMENTS: THIS DOCUMENT, AND THE IDEAS AND DESIGNS INCORPORATED HEREIN, AS AN INSTRUMENT OF PROFESSIONAL SERVICE, IS THE PROPERTY OF CH2M HILL AND IS NOT TO BE USED, IN WHOLE OR IN PART, FOR ANY OTHER PROJECT WITHOUT THE WRITTEN AUTHORIZATION OF CH2MHILL.
© CH2M HILL

integra engineering
450 DECATUR STREET
Denver, Colorado 80204 (303)825-1802

DSGN	W CHRISTOFFERSON
DR	M MONAHAN
CHK	G SIMPSON
APVD	M ROSSER

NO.	DATE	REVISION	BY	APVD

VERIFY SCALE
BAR IS ONE INCH ON ORIGINAL DRAWING.
0 1"
IF NOT ONE INCH ON THIS SHEET, ADJUST SCALES ACCORDINGLY.

CH2MHILL
Denver, CO 80112

Colorado Springs Utilities
It's how we're all connected

SOUTHWEST NON POTABLE WATER PIPELINE PROJECT PHASE 2

CIVIL DETAILS
BEAR CREEK PIPELINE
REVERSE ANCHOR, RESTRAINED JOINT, AND THRUST BLOCK DETAILS

SHEET	21
DWG	C-4
DATE	JULY 2004
PROJ	279649.TP.DE.BC

Colorado Springs Utilities Project No. 394245, Work Order No. 1152273, Colorado Springs Utilities Contract No. 200303829 MAP NO. : SOUTHWEST QUADRANT

FILENAME: brckdt06.dlv PLOT DATE: 30-JUN-2004 PLOT TIME: 16:31:18

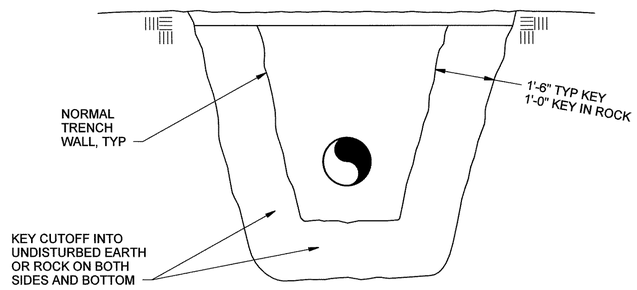

SECTION

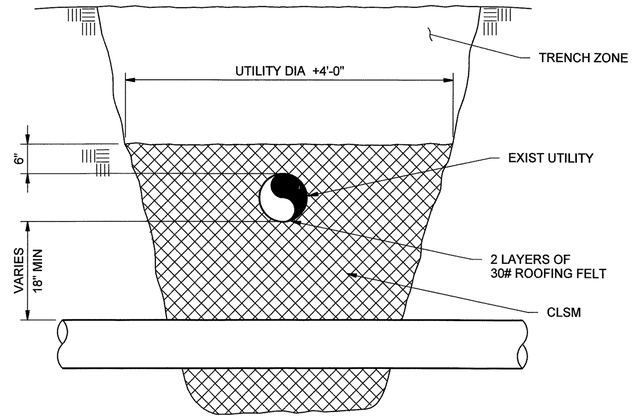

SECTION A

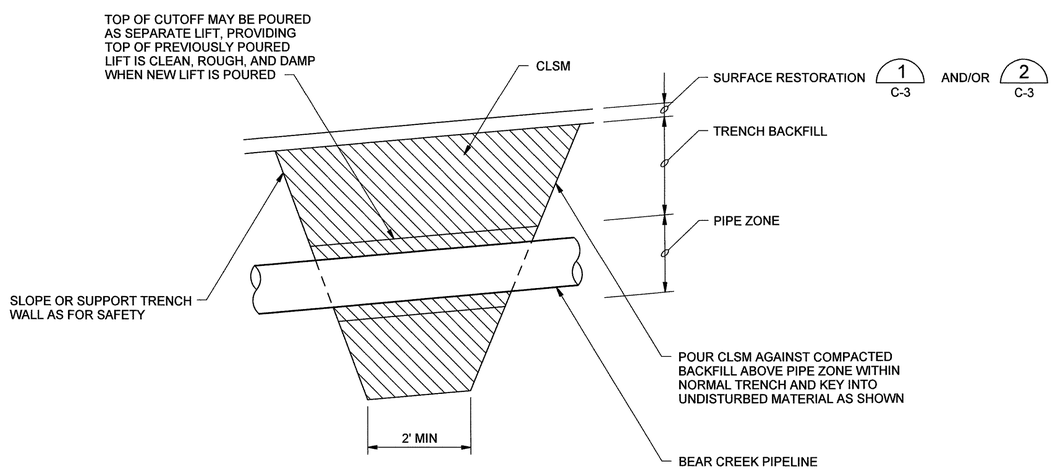

ELEVATION

TRENCH PLUG 1

NTS

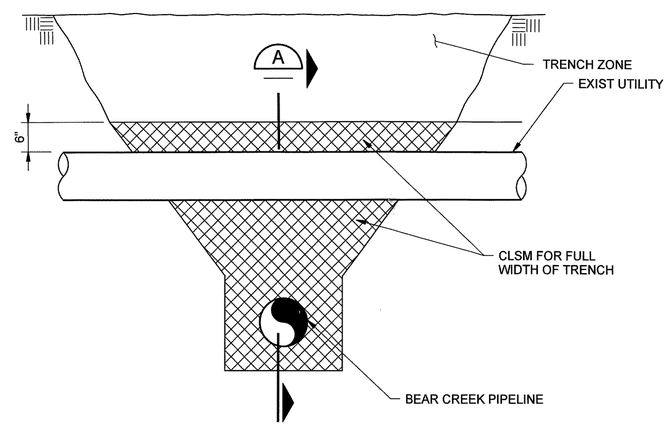

ELEVATION

NOTES:
1. FIRMLY SUPPORT EXISTING PIPE OR DUCT DURING INSTALLATION OF NEW PIPE.
2. UNDERGROUND UTILITY SUPPORT IS TO BE PROVIDED AT ALL UTILITY CROSSINGS EXCLUDING UNDERGROUND TELEPHONE CABLE.

MAJOR UTILITY CROSSING (12" DIA OR LARGER) CLSM SUPPORT 2

NTS

COLORADO REGISTERED PROFESSIONAL ENGINEER
JOHN ROSSER
32181
07-09-04

RECORD DRAWINGS

Revisions Drawn By B. CLEGG Date JULY 2004

THESE RECORD DRAWINGS HAVE BEEN PREPARED, IN PART, ON THE BASIS OF INFORMATION COMPILED BY OTHERS. THEY ARE NOT INTENDED TO REPRESENT IN DETAIL THE EXACT LOCATION, TYPE OF COMPONENT NOR MANNER OF CONSTRUCTION. THE ENGINEER WILL NOT BE RESPONSIBLE FOR ANY ERRORS OR OMISSIONS WHICH HAVE BEEN INCORPORATED INTO THE RECORD DRAWINGS.

REUSE OF DOCUMENTS: THIS DOCUMENT, AND THE IDEAS AND DESIGNS INCORPORATED HEREIN, AS AN INSTRUMENT OF PROFESSIONAL SERVICE, IS THE PROPERTY OF CH2M HILL AND IS NOT TO BE USED, IN WHOLE OR IN PART, FOR ANY OTHER PROJECT WITHOUT THE WRITTEN AUTHORIZATION OF CH2MHILL.
©CH2M HILL

integra engineering
450 DECATUR STREET
Denver, Colorado 80204 (303)825-1802

DSGN	W CHRISTOFFERSON
DR	M MONAHAN
CHK	G SIMPSON
APVD	M ROSSER

NO.	DATE	REVISION	BY	APVD

VERIFY SCALE
BAR IS ONE INCH ON ORIGINAL DRAWING.
0 1"
IF NOT ONE INCH ON THIS SHEET, ADJUST SCALES ACCORDINGLY.

CH2MHILL
Denver, CO 80112

Colorado Springs Utilities
It's how we're all connected

SOUTHWEST NON POTABLE WATER PIPELINE PROJECT PHASE 2

CIVIL DETAILS

BEAR CREEK PIPELINE
TRENCH PLUG AND UTILITY CROSSING DETAILS

SHEET	22
DWG	C-5
DATE	JULY 2004
PROJ	279649.TP.DE.BC

Colorado Springs Utilities Project No. 394245, Work Order No. 1152273, Colorado Springs Utilities Contract No. 200303829 MAP NO. : SOUTHWEST QUADRANT

FILENAME: brckdt07.dlv PLOT DATE: 30-JUN-2004 PLOT TIME: 16:31:54

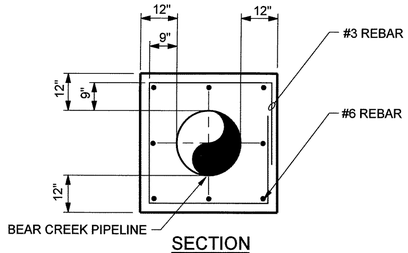

SECTION

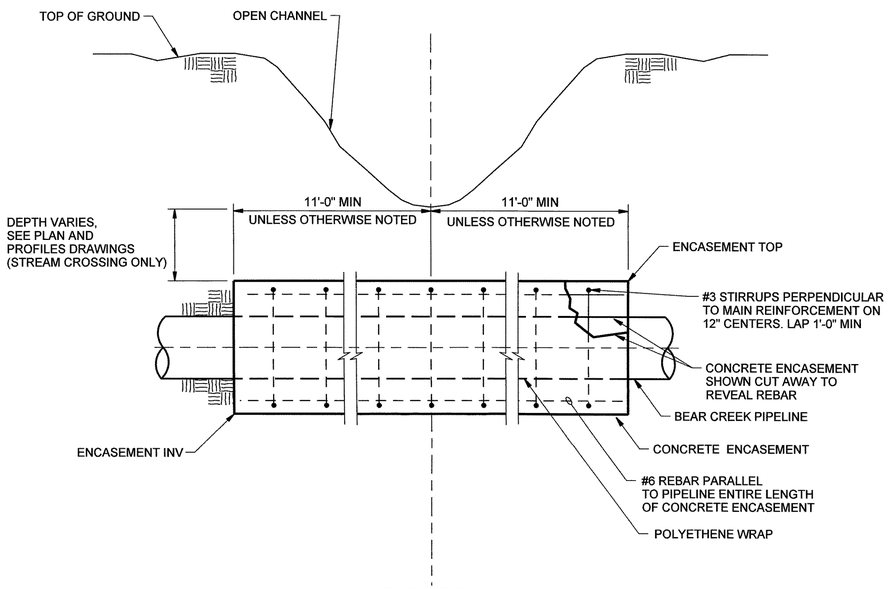

ELEVATION

NOTES:

1. AT EXISTING WATERLINE CROSSINGS PROVIDE 12" MIN CLEARANCE BETWEEN:

   A) INV OF EXISTING WATERLINE AND ENCASEMENT TOP OR
   B) ENCASEMENT INV AND TOP OF EXISTING WATERLINE.

CONCRETE PIPE ENCASEMENT (1)

NTS VAR

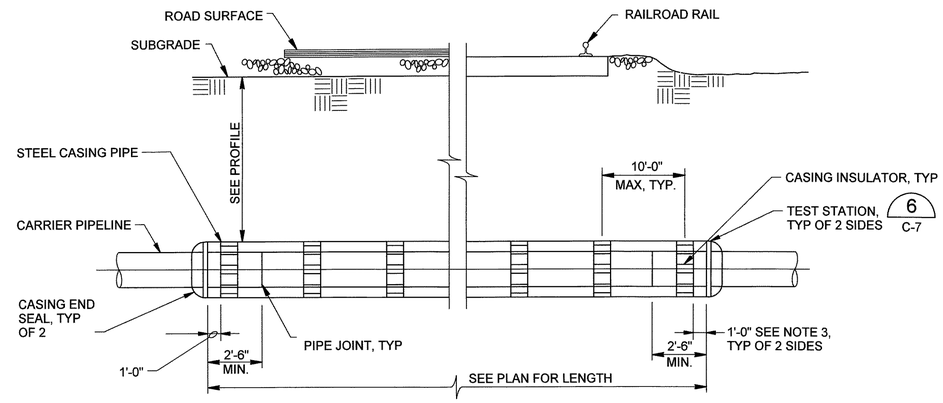

PROFILE

BORE	CASING DIA.	MW CASING WALL THICK (IN)	MAX ALLOWABLE JACKING LOAD (LBS)
8th STREET	36"	0.500	600,000
I-25	36"	0.500	600,000

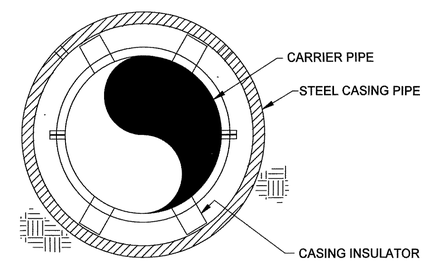

SECTION

NOTES:

1. OBTAIN A COPY OF ALL CROSSING PERMITS PRIOR TO CONSTRUCTION. CONFORM TO THE REQUIREMENTS OF THE CROSSING PERMITS.
2. CASING INSULATORS SHALL BE CENTERED, RESTRAINED AND, INSTALLED AT 10 FOOT INTERVALS MAXIMUM. INSTALL INSULATORS WITHIN ONE FOOT ON EACH SIDE OF CARRIER PIPE JOINTS, AND WITHIN ONE FOOT OF EACH CASING END.

UNDERCROSSING DETAIL (2)

NTS VAR

COLORADO REGISTERED PROFESSIONAL ENGINEER
MARK ROSSER
32181
07-09-04

RECORD DRAWINGS

Revisions Drawn By B. CLEGG Date JULY 2004

THESE RECORD DRAWINGS HAVE BEEN PREPARED, IN PART, ON THE BASIS OF INFORMATION COMPILED BY OTHERS. THEY ARE NOT INTENDED TO REPRESENT IN DETAIL THE EXACT LOCATION, TYPE OF COMPONENT NOR MANNER OF CONSTRUCTION. THE ENGINEER WILL NOT BE RESPONSIBLE FOR ANY ERRORS OR OMISSIONS WHICH HAVE BEEN INCORPORATED INTO THE RECORD DRAWINGS.

REUSE OF DOCUMENTS: THIS DOCUMENT AND THE IDEAS AND DESIGNS INCORPORATED HEREIN AS AN INSTRUMENT OF PROFESSIONAL SERVICE IS THE PROPERTY OF CH2M HILL AND IS NOT TO BE USED, IN WHOLE OR IN PART, FOR ANY OTHER PROJECT WITHOUT THE WRITTEN AUTHORIZATION OF CH2MHILL.
©CH2M HILL

integra engineering
450 DECATUR STREET
Denver, Colorado 80204 (303)825-1802

DSGN	W CHRISTOFFERSON					
DR	M MONAHAN					
CHK	G SIMPSON					
APVD	M ROSSER	NO.	DATE	REVISION	BY	APVD

VERIFY SCALE
BAR IS ONE INCH ON ORIGINAL DRAWING.
0 1"
IF NOT ONE INCH ON THIS SHEET, ADJUST SCALES ACCORDINGLY.

CH2MHILL
Denver, CO 80112

Colorado Springs Utilities
It's how we're all connected

SOUTHWEST NON POTABLE WATER PIPELINE PROJECT PHASE 2

CIVIL DETAILS

BEAR CREEK PIPELINE
CONCRETE ENCASEMENT AND BORING DETAILS

SHEET 23
DWG C-6
DATE JULY 2004
PROJ 279649.TP.DE.BC

Colorado Springs Utilities Project No. 394245, Work Order No. 1152273, Colorado Springs Utilities Contract No. 200303829 MAP NO. : SOUTHWEST QUADRANT

FILENAME: brckdt09.dlv PLOT DATE: 30-JUN-2004 PLOT TIME: 16:32:25

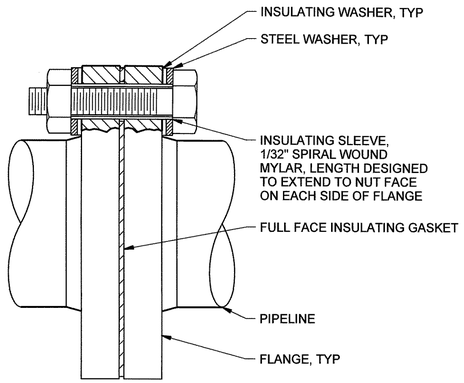

NOTES:

1. ABOVE GRADE INSULATING FLANGE INSTALLATION SHOWN.
2. COAT BURIED OR SUBMERGED INSULATED FLANGES WITH WAX TAPE #1 AFTER ASSEMBLING JOINT, CLEAN AWAY DIRT AND FOREIGN MATTER, APPLY PRIMER AND WRAP WAX TAPE.

INSULATING FLANGE (1)

NTS

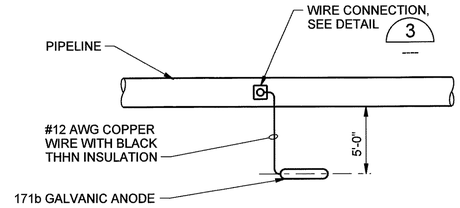

PLAN

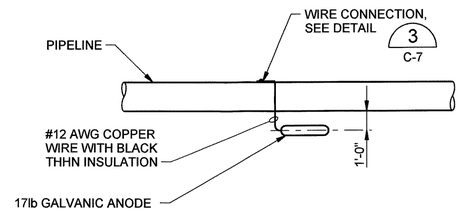

ELEVATION

GALVANIC ANODE INSTALLATION (2)

NTS

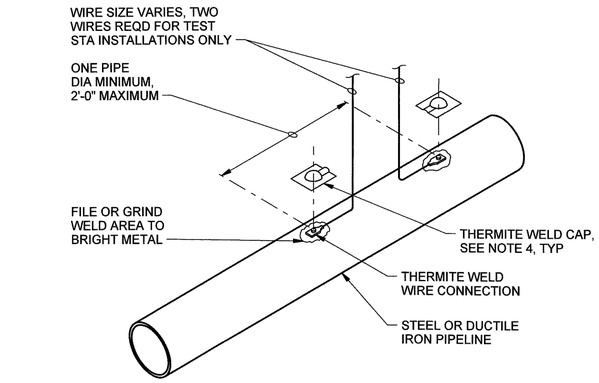

NOTES:

1. COPPER SLEEVE REQUIRED FOR THERMITE WELDING OF #10 AWG AND SMALLER WIRE.
2. USE COPPER SLEEVE ON #2 AWG JOINT BONDING WIRES.
3. WELDER AND CARTRIDGE SIZE VARIES ACCORDING TO WIRE SIZE AND PIPE MATERIAL, CONSULT WELDER MANUFACTURER FOR RECOMMENDED WELDER AND CARTRIDGE.
4. COAT WELD AREA AND FILL RECESS ON THERMITE WELD CAP WITH COLD APPLIED COAL TAR MASTIC AND APPLY CAP TO WELD.

WIRE CONNECTION FOR STEEL AND DUCTILE IRON PIPE (3)

NTS

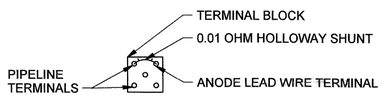

WIRE DIAGRAM

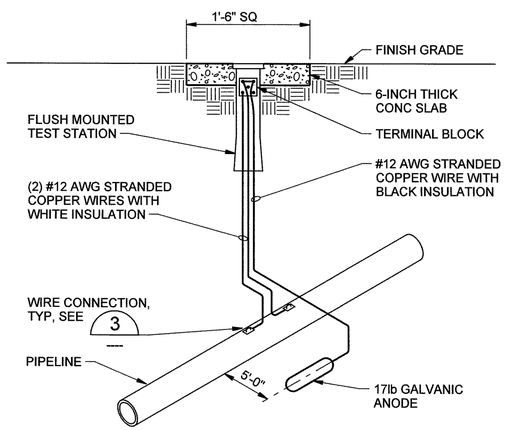

TYPE FT-A

NOTES:

1. PROVIDE SUFFICIENT SLACK IN TEST WIRES TO ALLOW TERMINAL BLOCK TO EXTEND 1'-6" OUT OF TEST STATION. COIL WIRES IN TEST STATION.
2. INSTALL GALVANIC ANODE 1'-0" BELOW PIPE INVERT ELEVATION.

FLUSH MOUNTED TEST STATION (4)

NTS

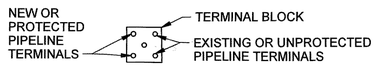

WIRE DIAGRAM

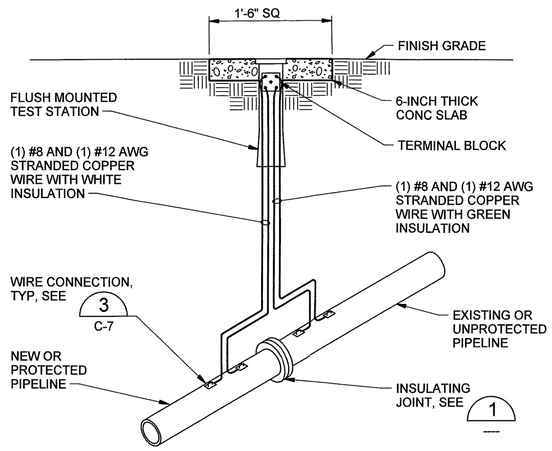

TYPE FI

NOTES:

1. PROVIDE SUFFICIENT SLACK IN TEST WIRES TO ALLOW TERMINAL BLOCK TO EXTEND 18" OUT OF TEST STATION. COIL WIRES IN TEST STATION.

FLUSH MOUNTED TEST STATION (5)

NTS

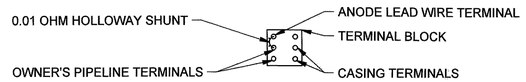

WIRE DIAGRAM

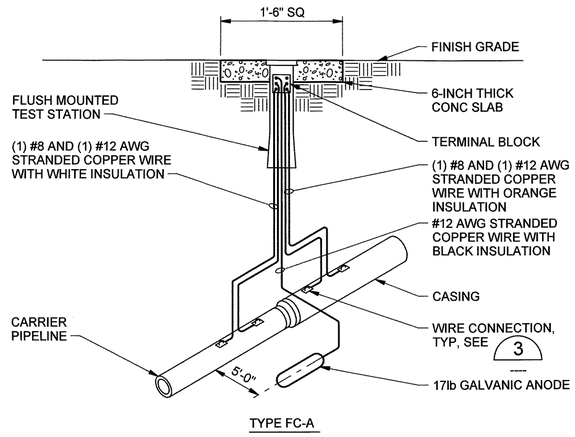

TYPE FC-A

NOTES:

1. PROVIDE SUFFICIENT SLACK IN TEST WIRES TO ALLOW TERMINAL BLOCK TO EXTEND 1'-6" OUT OF TEST STATION. COIL WIRES IN TEST STATION.
2. INSTALL GALVANIC ANODE 1'-0" BELOW PIPE INVERT ELEVATION.

FLUSH MOUNTED TEST STATION (6)

NTS

COLORADO REGISTERED PROFESSIONAL ENGINEER 32181 01-09-04

RECORD DRAWINGS

Revisions Drawn By B. CLEGG Date JULY 2004

THESE RECORD DRAWINGS HAVE BEEN PREPARED, IN PART, ON THE BASIS OF INFORMATION COMPILED BY OTHERS. THEY ARE NOT INTENDED TO REPRESENT IN DETAIL THE EXACT LOCATION, TYPE OF COMPONENT NOR MANNER OF CONSTRUCTION. THE ENGINEER WILL NOT BE RESPONSIBLE FOR ANY ERRORS OR OMISSIONS WHICH HAVE BEEN INCORPORATED INTO THE RECORD DRAWINGS.

REUSE OF DOCUMENTS: THIS DOCUMENT, AND THE IDEAS AND DESIGNS INCORPORATED HEREIN, AS AN INSTRUMENT OF PROFESSIONAL SERVICE, IS THE PROPERTY OF CH2M HILL AND IS NOT TO BE USED, IN WHOLE OR IN PART, FOR ANY OTHER PROJECT WITHOUT THE WRITTEN AUTHORIZATION OF CH2MHILL.
©CH2M HILL

integra engineering
450 DECATUR STREET
Denver, Colorado 80204 (303)825-1802

DSGN	W CHRISTOFFERSON
DR	M MONAHAN
CHK	G SIMPSON
APVD	M ROSSER

NO.	DATE	REVISION	BY	APVD

VERIFY SCALE
BAR IS ONE INCH ON ORIGINAL DRAWING.
0 1"
IF NOT ONE INCH ON THIS SHEET, ADJUST SCALES ACCORDINGLY.

CH2MHILL
Denver, CO 80112

Colorado Springs Utilities
It's how we're all connected

SOUTHWEST NON POTABLE WATER PIPELINE PROJECT PHASE 2

CIVIL DETAILS

BEAR CREEK PIPELINE
CATHODIC PROTECTION DETAILS

SHEET	24
DWG	C-7
DATE	JULY 2004
PROJ	279649.TP.DE.BC

Colorado Springs Utilities Project No. 394245, Work Order No. 1152273, Colorado Springs Utilities Contract No. 200303829 MAP NO. : SOUTHWEST QUADRANT

FILENAME: brckdt04.dlv PLOT DATE: 30-JUN-2004 PLOT TIME: 16:33:01

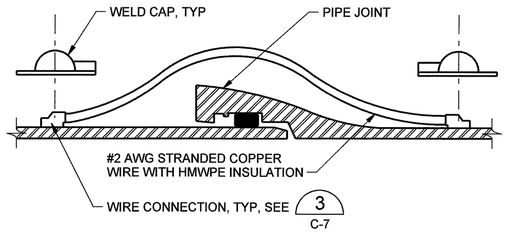

PUSH-ON JOINT BOND (1)
NTS

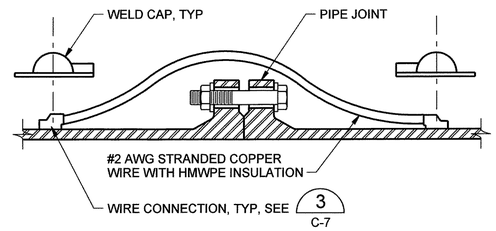

FLANGED JOINT BOND (2)
NTS

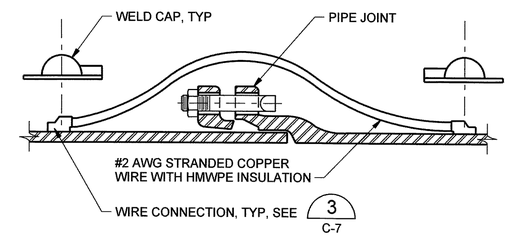

MECHANICAL JOINT BOND (3)
NTS

STATION	DETAIL	REMARKS
100+00 AND 107+70	5 C-7	INSULATE NEW PIPELINE FROM EXISTING PIPELINE
BETWEEN STA 100+20 AND STA 107+40	2 C-7	ANODES SHALL BE SPACED AT 60-FT INTERVALS
103+63.38 = 3+12.08	4 C-7	
3+29	6 C-7	LOCATE AT END OF CASING
5+69	6 C-7	LOCATE AT END OF CASING
6+28	4 C-7	
BETWEEN STA 6+88 AND STA 11+08	2 C-7	ANODES SHALL BE SPACED AT 60-FT INTERVALS
11+68	4 C-7	
BETWEEN STA 12+28 AND STA 15+28	2 C-7	ANODES SHALL BE SPACED AT 60-FT INTERVALS
15+80	4 C-7	
16+10	6 C-7	LOCATE AT END OF CASING
17+60	6 C-7	LOCATE AT END OF CASING
18+20	4 C-7	
BETWEEN STA 18+80 AND STA 77+48	2 C-7 EXCEPT AT: STA 27+80, STA 37+40, STA 47+00, STA 56+60, STA 66+20 AT THOSE STATIONS USE 4 C-7	ANODES SHALL BE SPACED AT 60-FT INTERVALS 4 C-7 TEST STATION SHALL BE INSTALLED AT APPROX 1,000 FOOT INTERVALS AS NOTED
77+10	4 C-7	

CATHODIC PROTECTION ANODE LOCATIONS (4)
NTS

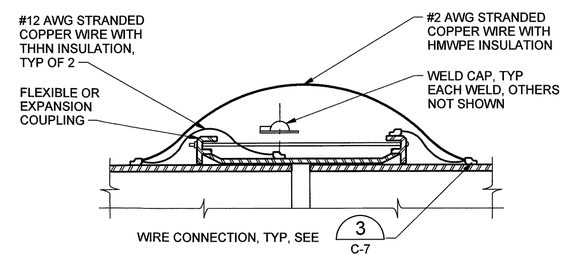

FLEXIBLE JOINT BOND (5)
NTS

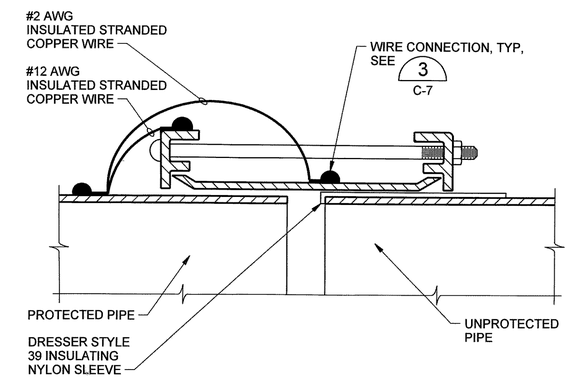

INSULATED FLEXIBLE JOINT BOND (6)
NTS

RECORD DRAWINGS

Revisions Drawn By B. CLEGG Date JULY 2004

THESE RECORD DRAWINGS HAVE BEEN PREPARED, IN PART, ON THE BASIS OF INFORMATION COMPILED BY OTHERS. THEY ARE NOT INTENDED TO REPRESENT IN DETAIL THE EXACT LOCATION, TYPE OF COMPONENT NOR MANNER OF CONSTRUCTION. THE ENGINEER WILL NOT BE RESPONSIBLE FOR ANY ERRORS OR OMISSIONS WHICH HAVE BEEN INCORPORATED INTO THE RECORD DRAWINGS.

REUSE OF DOCUMENTS: THIS DOCUMENT, AND THE IDEAS AND DESIGNS INCORPORATED HEREIN, AS AN INSTRUMENT OF PROFESSIONAL SERVICE, IS THE PROPERTY OF CH2M HILL AND IS NOT TO BE USED, IN WHOLE OR IN PART, FOR ANY OTHER PROJECT WITHOUT THE WRITTEN AUTHORIZATION OF CH2MHILL.
©CH2M HILL

integra engineering
450 DECATUR STREET
Denver, Colorado 80204 (303)825-1802

DSGN	W CHRISTOFFERSON
DR	M MONAHAN
CHK	G SIMPSON
APVD	M ROSSER

NO.	DATE	REVISION	BY	APVD

VERIFY SCALE
BAR IS ONE INCH ON ORIGINAL DRAWING.
0 1"
IF NOT ONE INCH ON THIS SHEET, ADJUST SCALES ACCORDINGLY.

CH2MHILL
Denver, CO 80112

Colorado Springs Utilities
It's how we're all connected

SOUTHWEST NON POTABLE WATER PIPELINE PROJECT PHASE 2

CIVIL DETAILS
BEAR CREEK PIPELINE
CATHODIC PROTECTION DETAILS

SHEET	25
DWG	C-8
DATE	JULY 2004
PROJ	279649.TP.DE.BC

Colorado Springs Utilities Project No. 394245, Work Order No. 1152273, Colorado Springs Utilities Contract No. 200303829 MAP NO. : SOUTHWEST QUADRANT

FILENAME: brckdt12.dlv PLOT DATE: 30-JUN-2004 PLOT TIME: 16:33:36

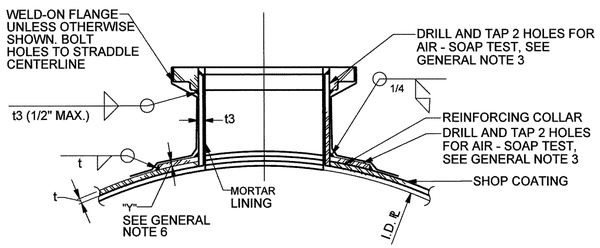

NOTE:
1. BOLT # AND HOLE PATTERN TO MATCH DIP FLANGE PATTERN OF CONNECTING PIPE.

OUTLET REINFORCING 1

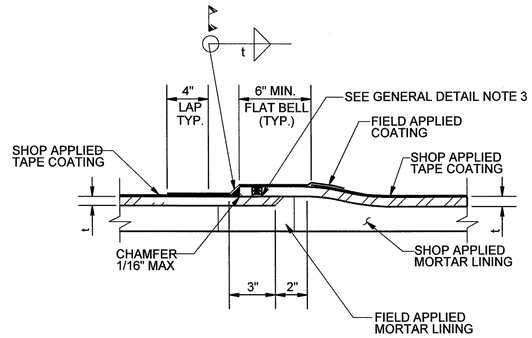

NOTES:

1. HOLD BACK SHOP LINING 3" MIN FROM SPIGOT END.

SINGLE LAP-WELDED JOINTS 2

1. ALL PIPE WELDING SHALL CONFORM TO THE APPLICABLE PROVISIONS OF THE LATEST EDITION OF THE ANSI/AWS D1.1 OR THE A.S.M.E. BOILER AND PRESSURE VESSEL CODE, SECTION VIII, DIVISION 1 FOR UNFIRED PRESSURE VESSELS.
2. "t" INDICATES THE THICKNESS OF STEEL PIPE AT THE PIPELINE STATION WHERE USED. "t2" INDICATES OFFSET OF O.D. OF STEEL CYLINDER.
3. DRILL AND TAP BEFORE WELDING, (2) 1/4" HOLES FOR AIR-SOAP TESTS. PERFORM AIR-SOAP TESTS. PLUG WELD HOLE ON SUCCESSFUL COMPLETION OF THE JOINT TESTS.
4. WELDING SYMBOLS PER AISC.
5. FOR COATING DETAILS SEE 3 , SIMILAR.
6. WIDTH AND THICKNESS OF OUTLET REINFORCING TO BE DETERMINED PER SECTION 02501.

GENERAL NOTES FOR STEEL DETAILS 3

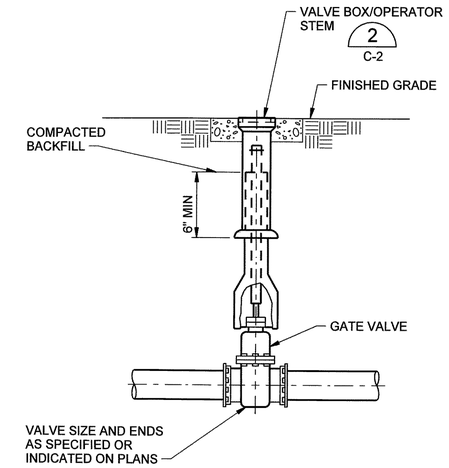

BURIED GATE VALVE 4

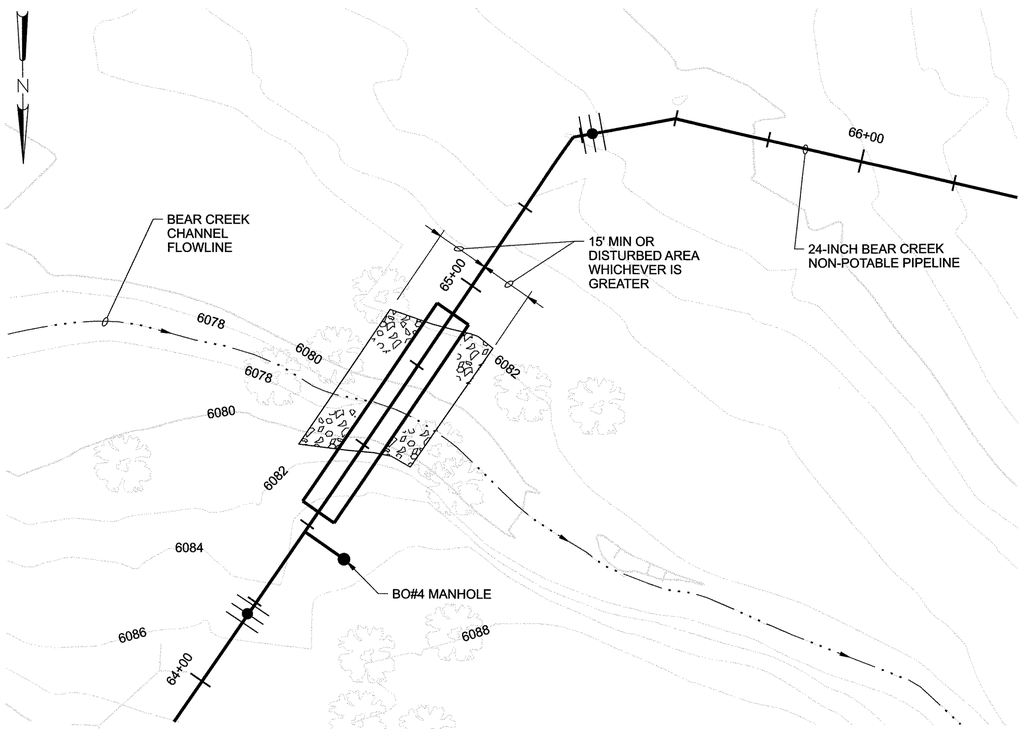

PLAN

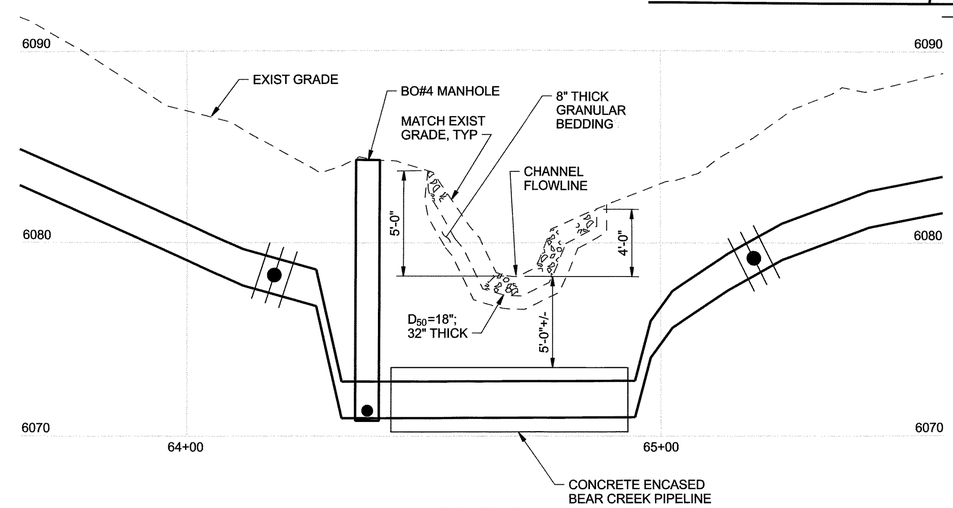

PROFILE

RIPRAP GRADATION D_{50}=18"	
INTERMEDIATE ROCK DIMENSION (IN)	% SMALLER THAN GIVEN SIZE BY WEIGHT
30	70-100
24	50-70
18	35-50
6	2-10

GRANULAR BEDDING GRADATION	
US STANDARD SIEVE SIZE	PERCENT WEIGHT BY PASSING
3-INCHES	90-100
3/4-INCH	20-90
#4	0-20
#200	0-3

BEAR CREEK CROSSING RIPRAP DETAIL 5

NTS

PP-7

COLORADO REGISTERED MARK ROSSER 21181 02-09-04 PROFESSIONAL ENGINEER

RECORD DRAWINGS

Revisions Drawn By B. CLEGG Date JULY 2004

THESE RECORD DRAWINGS HAVE BEEN PREPARED, IN PART, ON THE BASIS OF INFORMATION COMPILED BY OTHERS. THEY ARE NOT INTENDED TO REPRESENT IN DETAIL THE EXACT LOCATION, TYPE OF COMPONENT NOR MANNER OF CONSTRUCTION. THE ENGINEER WILL NOT BE RESPONSIBLE FOR ANY ERRORS OR OMISSIONS WHICH HAVE BEEN INCORPORATED INTO THE RECORD DRAWINGS.

REUSE OF DOCUMENTS: THIS DOCUMENT, AND THE IDEAS AND DESIGNS INCORPORATED HEREIN, AS AN INSTRUMENT OF PROFESSIONAL SERVICE, IS THE PROPERTY OF CH2M HILL AND IS NOT TO BE USED, IN WHOLE OR IN PART, FOR ANY OTHER PROJECT WITHOUT THE WRITTEN AUTHORIZATION OF CH2MHILL.
©CH2M HILL

integra engineering
450 DECATUR STREET
Denver, Colorado 80204 (303)825-1802

DSGN	W CHRISTOFFERSON
DR	M MONAHAN
CHK	G SIMPSON
APVD	M ROSSER

NO.	DATE	REVISION	BY	APVD

VERIFY SCALE
BAR IS ONE INCH ON ORIGINAL DRAWING.
0 1"
IF NOT ONE INCH ON THIS SHEET, ADJUST SCALES ACCORDINGLY.

CH2MHILL
Denver, CO 80112

Colorado Springs Utilities
It's how we're all connected

SOUTHWEST NON POTABLE WATER PIPELINE PROJECT PHASE 2

CIVIL DETAILS

BEAR CREEK PIPELINE APPURTENANCE AND RIPRAP DETAILS

SHEET	26
DWG	C-9
DATE	JULY 2004
PROJ	279649.TP.DE.BC

Colorado Springs Utilities Project No. 394245, Work Order No. 1152273, Colorado Springs Utilities Contract No. 200303829 MAP NO. : SOUTHWEST QUADRANT

FILENAME: brckdt13.dlv PLOT DATE: 30-JUN-2004 PLOT TIME: 16:34:20

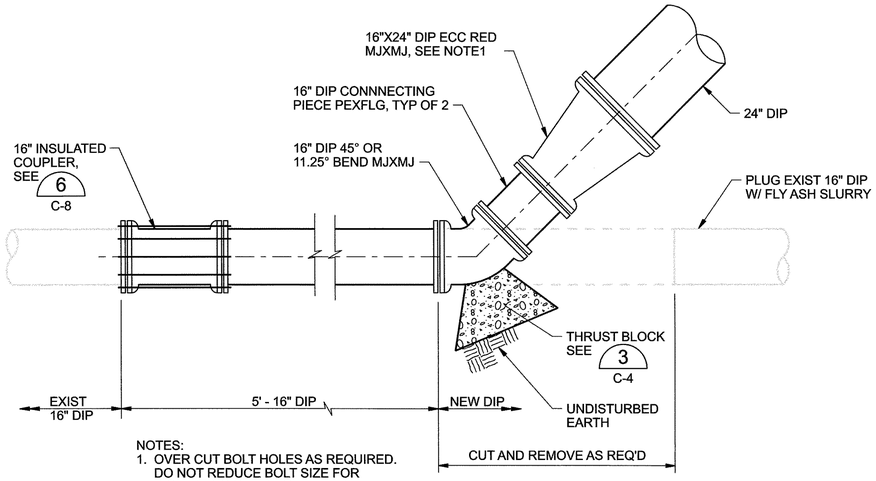

NOTES:
1. OVER CUT BOLT HOLES AS REQUIRED. DO NOT REDUCE BOLT SIZE FOR INSULATING SLEEVES.
2. JOINTS SHALL BE RESTRAINED.

EXISTING 16-INCH NON POTABLE CONNECTION (1)

1/4"=1'-0"

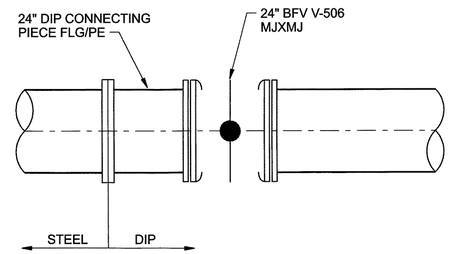

NOTES:
1. JOINTS SHALL BE RESTRAINED.

STEEL/DIP TRANSITION DETAIL (3)

1/4"=1'-0"

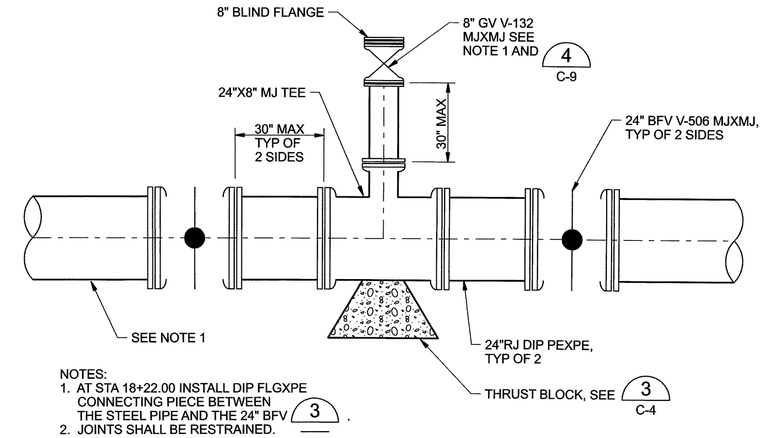

NOTES:
1. AT STA 18+22.00 INSTALL DIP FLGXPE CONNECTING PIECE BETWEEN THE STEEL PIPE AND THE 24" BFV (3).
2. JOINTS SHALL BE RESTRAINED.

RECLAIMED WATER TAP DETAIL (4)

1/4"=1'-0"

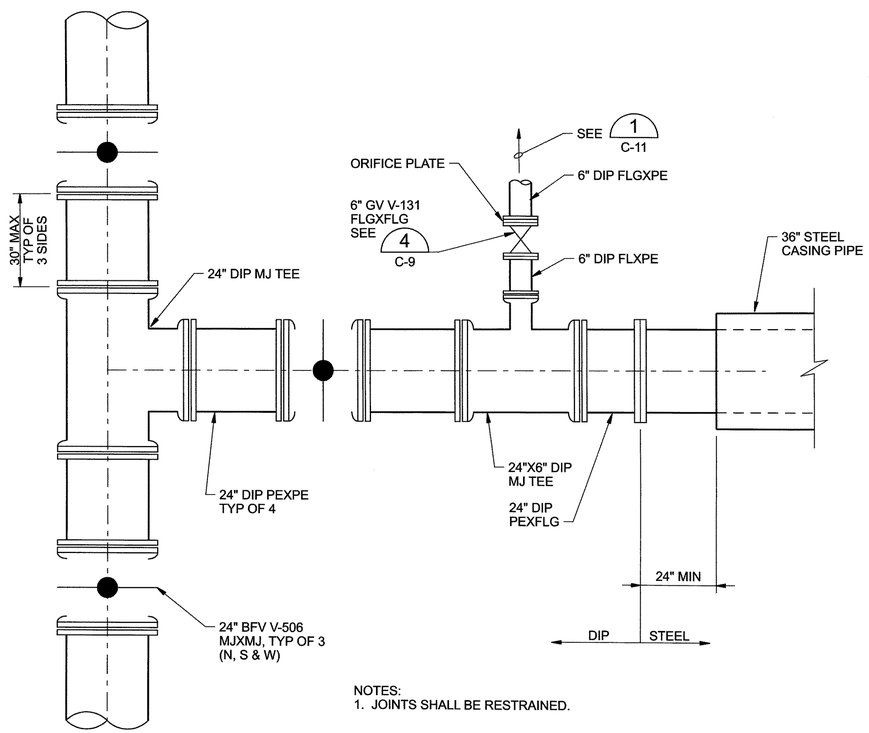

NOTES:
1. JOINTS SHALL BE RESTRAINED.

I-25/FOUNTAIN CREEK CONNECTION DETAIL (2)

1/4"=1'-0"

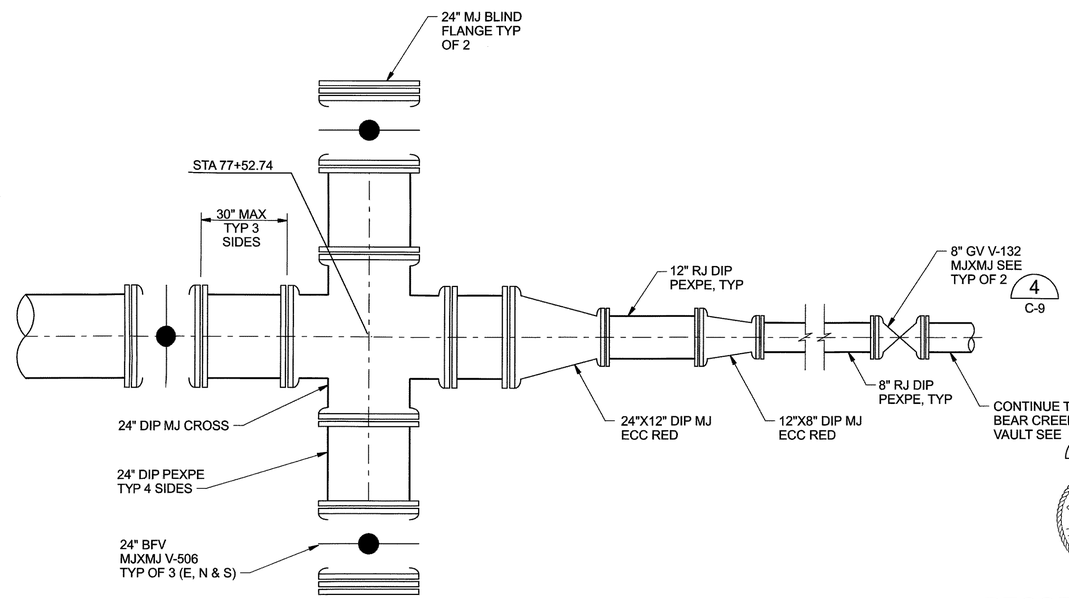

NOTES:
1. JOINTS SHALL BE RESTRAINED.

BEAR CREEK PARK CONNECTION DETAIL (5)

1/4"=1'-0"

COLORADO REGISTERED PROFESSIONAL ENGINEER
MARK ROSSER
37181
07-09-04

RECORD DRAWINGS

Revisions Drawn By B. CLEGG Date JULY 2004

THESE RECORD DRAWINGS HAVE BEEN PREPARED, IN PART, ON THE BASIS OF INFORMATION COMPILED BY OTHERS. THEY ARE NOT INTENDED TO REPRESENT IN DETAIL THE EXACT LOCATION, TYPE OF COMPONENT NOR MANNER OF CONSTRUCTION. THE ENGINEER WILL NOT BE RESPONSIBLE FOR ANY ERRORS OR OMISSIONS WHICH HAVE BEEN INCORPORATED INTO THE RECORD DRAWINGS.

REUSE OF DOCUMENTS: THIS DOCUMENT, AND THE IDEAS AND DESIGNS INCORPORATED HEREIN, AS AN INSTRUMENT OF PROFESSIONAL SERVICE, IS THE PROPERTY OF CH2M HILL AND IS NOT TO BE USED, IN WHOLE OR IN PART, FOR ANY OTHER PROJECT WITHOUT THE WRITTEN AUTHORIZATION OF CH2MHILL.
©CH2M HILL

integra engineering
450 DECATUR STREET
Denver, Colorado 80204 (303)825-1802

DSGN	W CHRISTOFFERSON
DR	M MONAHAN
CHK	G SIMPSON
APVD	M ROSSER

NO.	DATE	REVISION	BY	APVD

VERIFY SCALE
BAR IS ONE INCH ON ORIGINAL DRAWING.
0 1"
IF NOT ONE INCH ON THIS SHEET, ADJUST SCALES ACCORDINGLY.

CH2MHILL
Denver, CO 80112

Colorado Springs Utilities
It's how we're all connected

SOUTHWEST NON POTABLE WATER PIPELINE PROJECT PHASE 2

CIVIL DETAILS

BEAR CREEK PIPELINE CONNECTION DETAILS

SHEET	27
DWG	C-10
DATE	JULY 2004
PROJ	279649.TP.DE.BC

Colorado Springs Utilities Project No. 394245, Work Order No. 1152273, Colorado Springs Utilities Contract No. 200303829 MAP NO. : SOUTHWEST QUADRANT

FILENAME: brckdt15.dlv PLOT DATE: 30-JUN-2004 PLOT TIME: 16:35:00

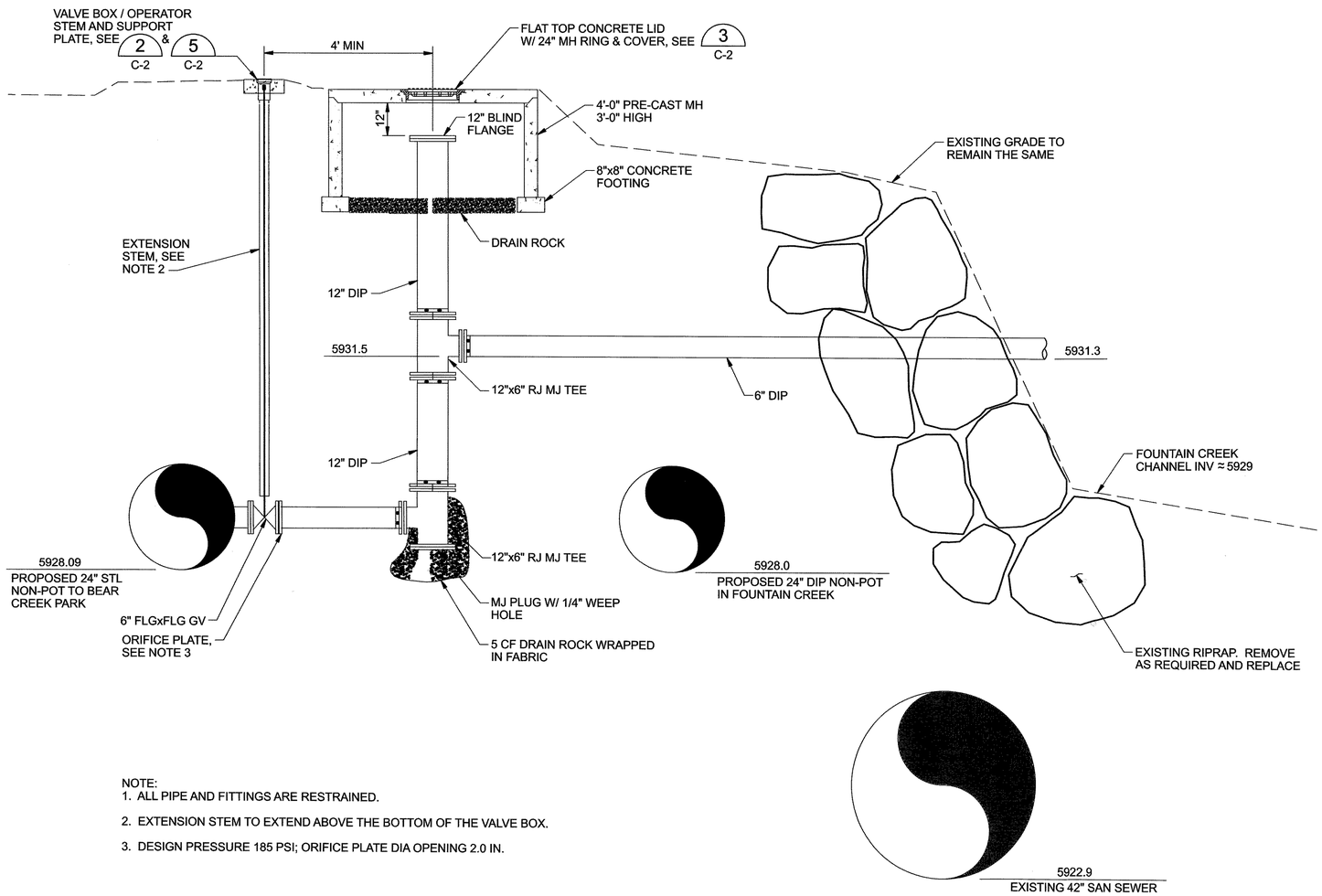

NOTE:
1. ALL PIPE AND FITTINGS ARE RESTRAINED.
2. EXTENSION STEM TO EXTEND ABOVE THE BOTTOM OF THE VALVE BOX.
3. DESIGN PRESSURE 185 PSI; ORIFICE PLATE DIA OPENING 2.0 IN.

BLOWOFF #1-12" PUMP WELL WITH 6" DRAIN (1)
NTS

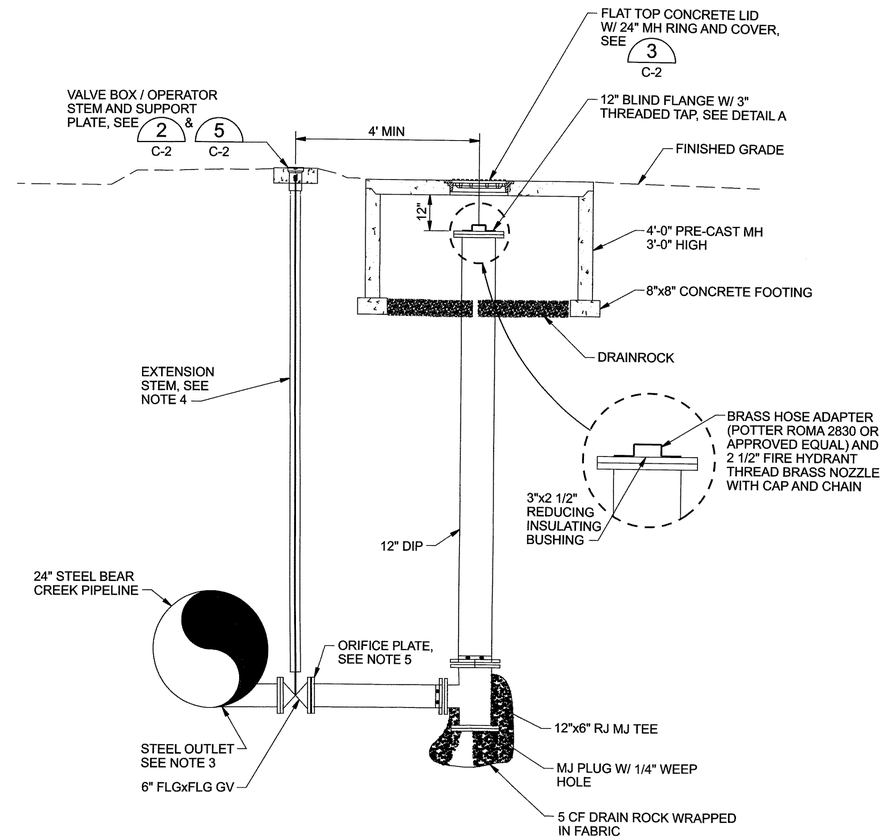

NOTE:
1. ALL PIPE AND FITTINGS ARE RESTRAINED.
2. STEEL FLANGES SHALL BE AWWA C207, CLASS E.
3. STEEL OUTLET REINFORCING DETAIL (1) C-9
4. EXTENSION STEM TO EXTEND ABOVE THE BOTTOM OF THE VALVE BOX.
5. DESIGN PRESSURE 169 PSI; ORIFICE PLATE DIA OPENING 1.5 IN.

BLOWOFF #2-12" PUMP WELL (2)
NTS

COLORADO REGISTERED PROFESSIONAL ENGINEER 32181 07-09-04

RECORD DRAWINGS

Revisions Drawn By B. CLEGG Date JULY 2004

THESE RECORD DRAWINGS HAVE BEEN PREPARED, IN PART, ON THE BASIS OF INFORMATION COMPILED BY OTHERS. THEY ARE NOT INTENDED TO REPRESENT IN DETAIL THE EXACT LOCATION, TYPE OF COMPONENT NOR MANNER OF CONSTRUCTION. THE ENGINEER WILL NOT BE RESPONSIBLE FOR ANY ERRORS OR OMISSIONS WHICH HAVE BEEN INCORPORATED INTO THE RECORD DRAWINGS.

REUSE OF DOCUMENTS: THIS DOCUMENT, AND THE IDEAS AND DESIGNS INCORPORATED HEREIN, AS AN INSTRUMENT OF PROFESSIONAL SERVICE, IS THE PROPERTY OF CH2M HILL AND IS NOT TO BE USED, IN WHOLE OR IN PART, FOR ANY OTHER PROJECT WITHOUT THE WRITTEN AUTHORIZATION OF CH2MHILL.
© CH2M HILL

integra engineering
450 DECATUR STREET
Denver, Colorado 80204 (303)825-1802

DSGN	W CHRISTOFFERSON
DR	M MONAHAN
CHK	G SIMPSON
APVD	M ROSSER

NO.	DATE	REVISION	BY	APVD

VERIFY SCALE
BAR IS ONE INCH ON ORIGINAL DRAWING.
0 1"
IF NOT ONE INCH ON THIS SHEET, ADJUST SCALES ACCORDINGLY.

CH2MHILL
Denver, CO 80112

Colorado Springs Utilities
It's how we're all connected

SOUTHWEST NON POTABLE WATER PIPELINE PROJECT PHASE 2

CIVIL DETAILS
BEAR CREEK PIPELINE APPURTENANCE DETAILS

SHEET	28
DWG	C-11
DATE	JULY 2004
PROJ	279649.TP.DE.BC

Colorado Springs Utilities Project No. 394245, Work Order No. 1152273, Colorado Springs Utilities Contract No. 200303829 MAP NO. : SOUTHWEST QUADRANT

FILENAME: brckdt16.dlv PLOT DATE: 30-JUN-2004 PLOT TIME: 16:35:39