WEST SYSTEM
16 INCH NONPOTABLE WATERLINE REPLACEMENT
SOUTH FOUNTAIN SECTION
for the

3-29-94
Test South Fountain Section
at 300 PSI for 2 hrs took
24 Gallons to Bring Back up
to 300 PSI
from 2:45 P.M. to 4:45 P.M.

CITY OF COLORADO SPRINGS WASTEWATER DEPARTMENT

SYMBOL LEGEND

TS	Indicates Little Fink Test Station location
1	Indicates pipeline curve (see table same sheet)
A	Indicates Anode installation
A	Indicates Air Release and Vacuum Valve
1	Indicates planting note (See Sheet 11 of 12)

GENERAL NOTES

1. The location of all utilities as shown on these drawings are approximate only. The location of all utilities shall be verified prior to construction by the Contractor.
2. All construction is to be in accordance with the City of Colorado Springs specifications for Nonpotable Water Line materials and installation.
3. Contractor shall field excavate and verify the vertical and horizontal location of all tie-ins. Contractor shall notify Engineer of the field verified information prior to construction.
4. Water lines shall be buried at a minimum of 5 feet of cover unless otherwise noted on the plans.
5. All fittings shall be mechanical joint unless otherwise noted on the plans.
6. Refer to Project Manual for complete soils information.
7. Where changes in surface grade are noted as "proposed grade" on pipeline profiles, the contractor is responsible for cut/fill as necessary to achieve the grading modification. Grading must preserve drainage patterns.
8. A Gas Department Inspector is required to be on site during any construction around gas facilities. Notify the Gas Department 48 hours prior to the beginning of construction.
9. For work areas under large overhead electric lines – contact Electric Dep. at 636-5530 with minimum 48 hour notice to install insulating devices on lines.
10. Electric Dept. requires the trench to be shored to provide a minimum of 4' of undisturbed earth between top of trench and electric tower leg.
11. Restore all surface improvements to their original condition.
12. 6" to 12" of topsoil shall be stockpiled separately and replaced at the surface of the trench and disturbed areas.
13. Fill placed in the Fountain Creek stream bed for the access shall be removed and the existing condition shall be restored as it exists.

CORROSION NOTES

1. 17# mag. anodes to be installed at a maximum of 200 feet and as indicated on the plans.
2. Place double wrap polyethylene tubing on main at all electric crossings, DIP crossings, and metal pipe storm sewer crossings.
3. All tie-in points shall be insulated from new main. Prior to backfilling, call Corrosion (636-5729) for inspection.

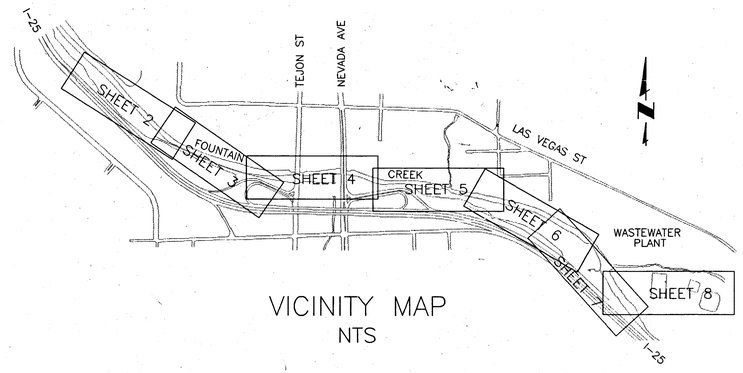

VICINITY MAP
NTS

APPROVALS

Parks and Recreation Dept. [signature] 8/10/93

Engineering Division [signature] for City Eng. August 11, 1993

Water Dept. [signature] 8/2/93

Gas Dept. [signature] 8/9/93

Electric Dept. [signature] 8/6/93

SHEET INDEX

SHEET NO.	DESCRIPTION
1	Cover and Index Sheet
2	Plan & Profile Sta. 10+00.00 to 24+30.00
3	Plan & Profile Sta. 24+30.00 to 35+52.00
4	Plan & Profile Sta. 35+52.00 to 51+26.00
5	Plan & Profile Sta. 51+26.00 to 65+00.00
6	Plan & Profile Sta. 65+00.00 to 79+80.00
7	Plan & Profile Sta. 79+80.00 to 89+40.00
8	Plan & Profile Sta. 89+40.00 to Tie-In
9	Crossing & Casing Details
10	Piping & Connection Details
11	Typical Waterline Details
12	Access Plan

PKM
CIVIL ENGINEERS
118 North Tejon Street Suite 302
Colorado Springs, Colorado 80903
(719) 473-0232 FAX (719) 471-7414

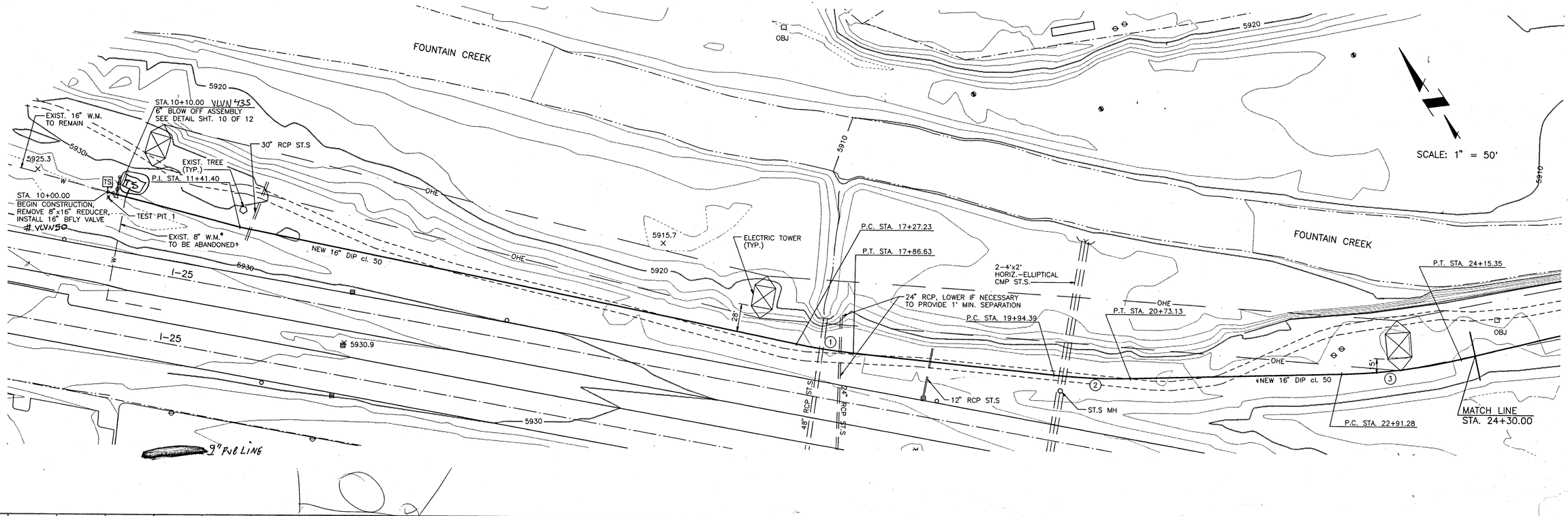

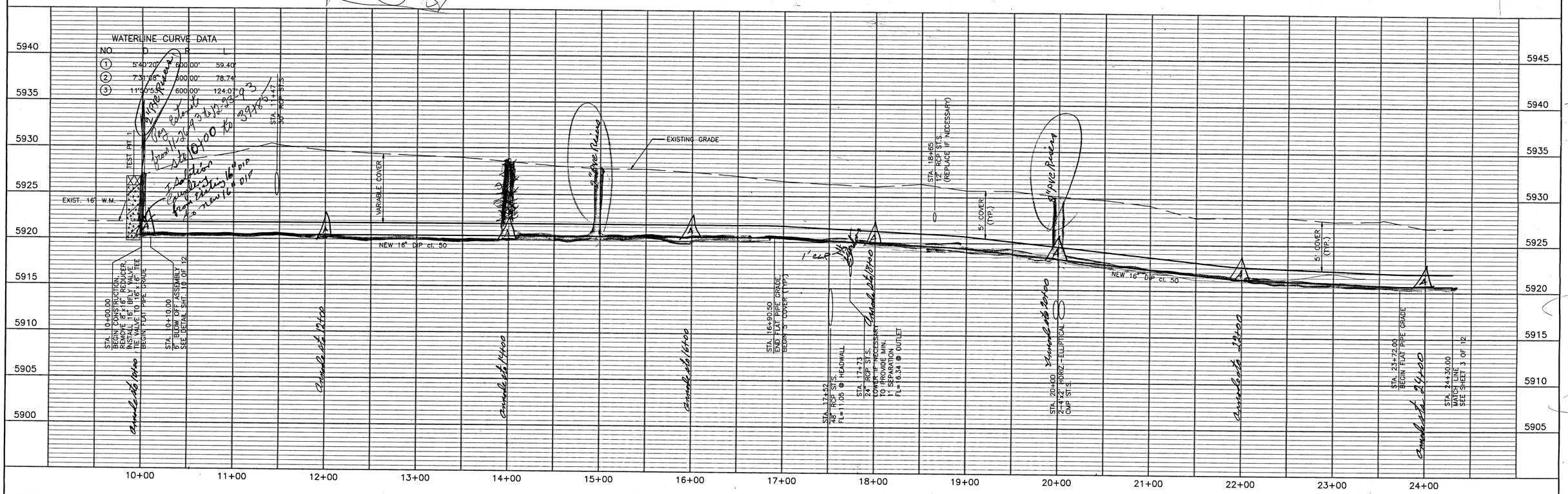

PKM CIVIL ENGINEERS
118 North Tejon Street Suite 302
Colorado Springs, Colorado 80903
(719) 473-0232 FAX (719) 471-7414

NO.	REVISIONS	BY	DATE

PREPARED UNDER THE SUPERVISION OF JOHN P. McGINN, P.E.

DESIGNED GCC | CHECKED JPM | SCALE 1" = 50'(H)

DRAWN CAD | DATE 7/06/93 | 1" = 5'(V)

CLIENT: WASTEWATER DEPARTMENT COLLECTION DIVISION
THE CITY OF COLORADO SPRINGS

TITLE: Nonpotable Water Line Replacement
Water Plan and Profile Sheet

JOB NO. 167.1

SHEET NO. 2 OF 12 SHEETS

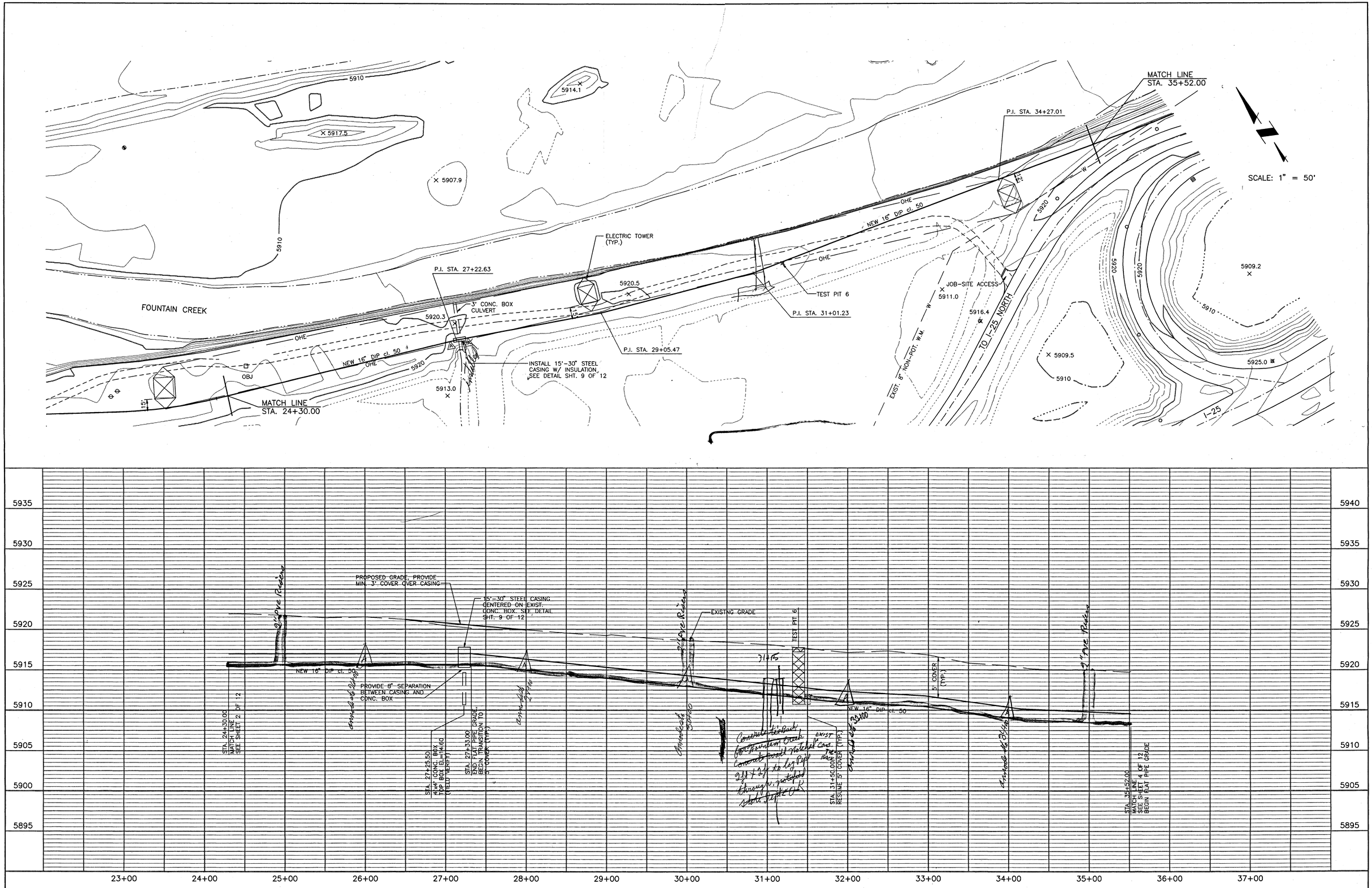

PKM CIVIL ENGINEERS
118 North Tejon Street Suite 302
Colorado Springs, Colorado 80903
(719) 473-0232 FAX (719) 471-7414

NO.	REVISIONS	BY	DATE

PREPARED UNDER THE SUPERVISION OF JOHN P. McGINN, P.E.

DESIGNED GCC	CHECKED JPM	SCALE 1" = 50'(H)	
DRAWN CAD	DATE 7/06/93	1" = 5'(V)	

CLIENT: WASTEWATER DEPARTMENT COLLECTION DIVISION
THE CITY OF COLORADO SPRINGS

TITLE: Nonpotable Water Line Replacement
Water Plan and Profile Sheet

JOB NO. 167.1
SHEET NO. 3 OF 12 SHEETS

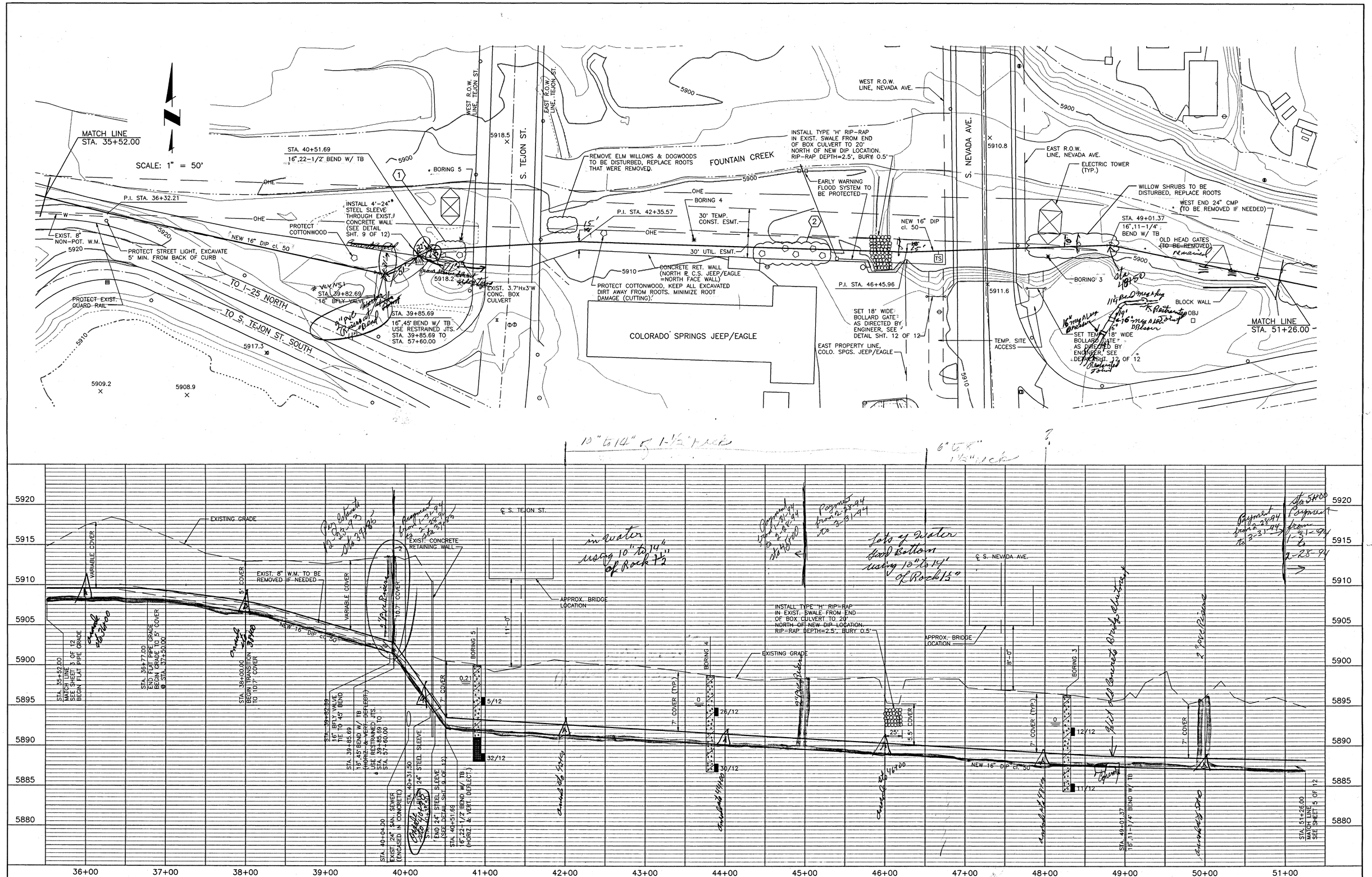

PKM CIVIL ENGINEERS
118 North Tejon Street Suite 302
Colorado Springs, Colorado 80903
(719) 473-0232 FAX (719) 471-7414

NO.	REVISIONS	BY	DATE

PREPARED UNDER THE SUPERVISION OF JOHN P. McGINN, P.E.

DESIGNED	GCC	CHECKED	JPM
DRAWN	CAD	DATE	7/06/93

SCALE 1" = 50'(H)
1" = 5'(V)

CLIENT: WASTEWATER DEPARTMENT COLLECTION DIVISION
THE CITY OF COLORADO SPRINGS

TITLE: Nonpotable Water Line Replacement
Water Plan and Profile Sheet

JOB NO. 167.1
SHEET NO. 4 OF 12 SHEETS

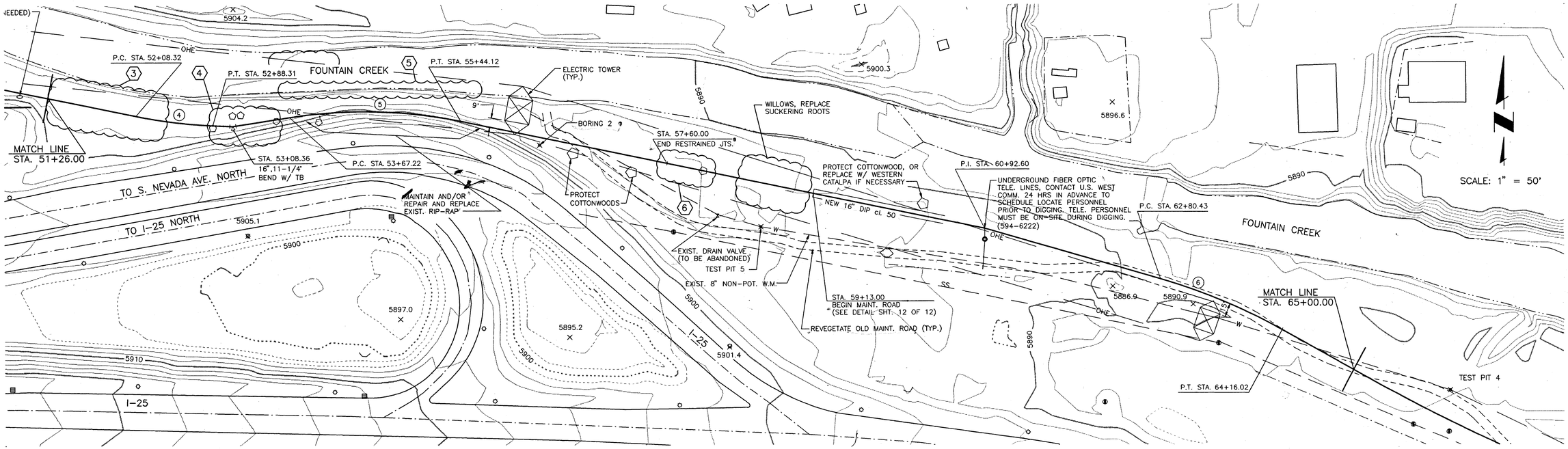

WATERLINE CURVE DATA

NO.	D	R	L
4	9°09'58"	500.00'	79.99'
5	20°16'17"	500.00'	176.90'
6	12°56'52"	600.00'	135.59'

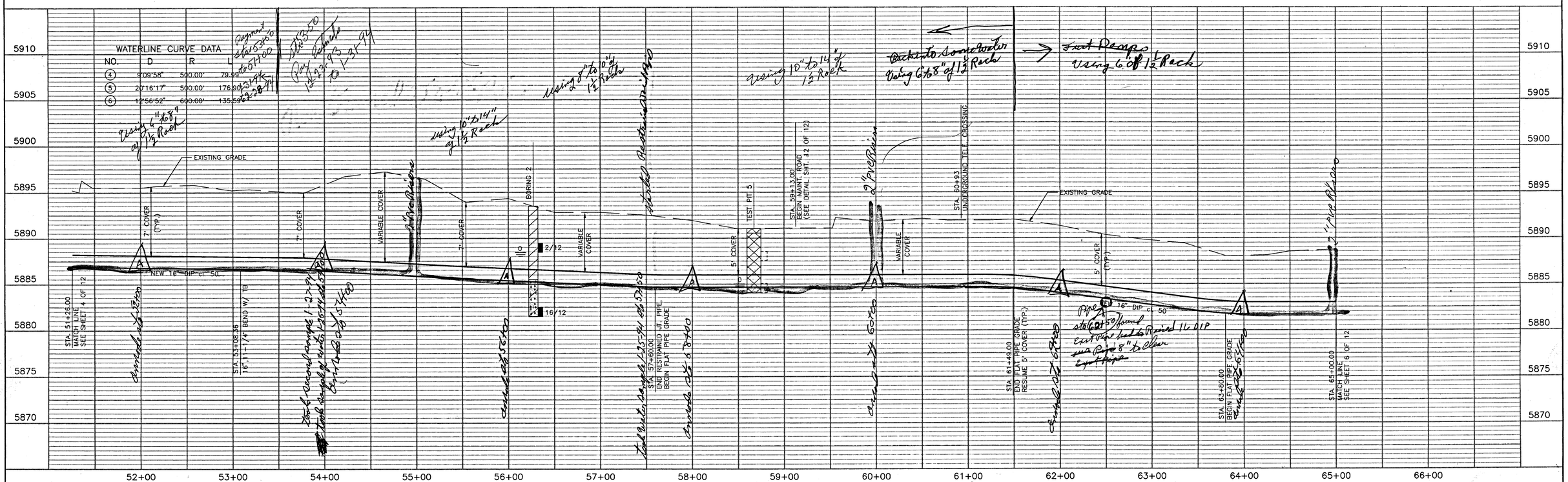

PKM CIVIL ENGINEERS
118 North Tejon Street Suite 302
Colorado Springs, Colorado 80903
(719) 473-0232 FAX (719) 471-7414

NO.	REVISIONS	BY	DATE

PREPARED UNDER THE SUPERVISION OF JOHN P. McGINN, P.E.

DESIGNED	GCC	CHECKED JPM	SCALE 1" = 50'(H)
DRAWN	CAD	DATE 7/06/93	1" = 5'(V)

CLIENT: WASTEWATER DEPARTMENT COLLECTION DIVISION
THE CITY OF COLORADO SPRINGS

TITLE: Nonpotable Water Line Replacement
Water Plan and Profile Sheet

JOB NO. 167.1
SHEET NO. 5 OF 12 SHEETS

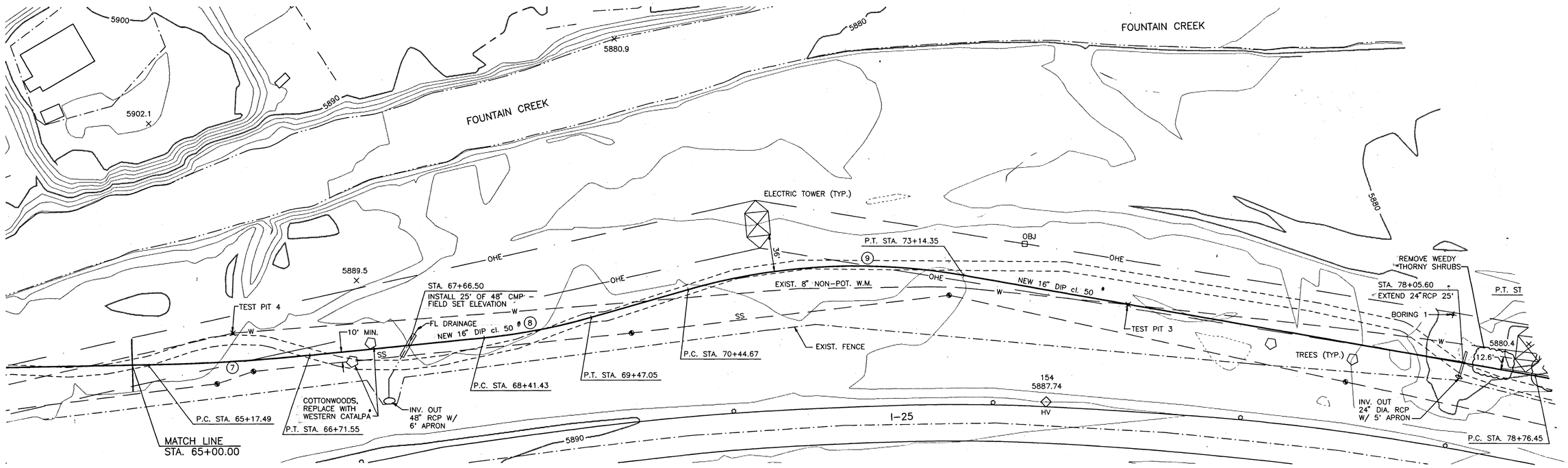

WATERLINE CURVE DATA

NO.	D	R	L
7	4°54'14"	1800.00'	154.06'
8	10°05'11"	600.00'	105.62'
9	25°45'10"	600.00'	269.68'
10	5°13'05"	600.00'	54.65'

LAYING IN WATER
USING 1½ ROCKS 8" to 10" Depth

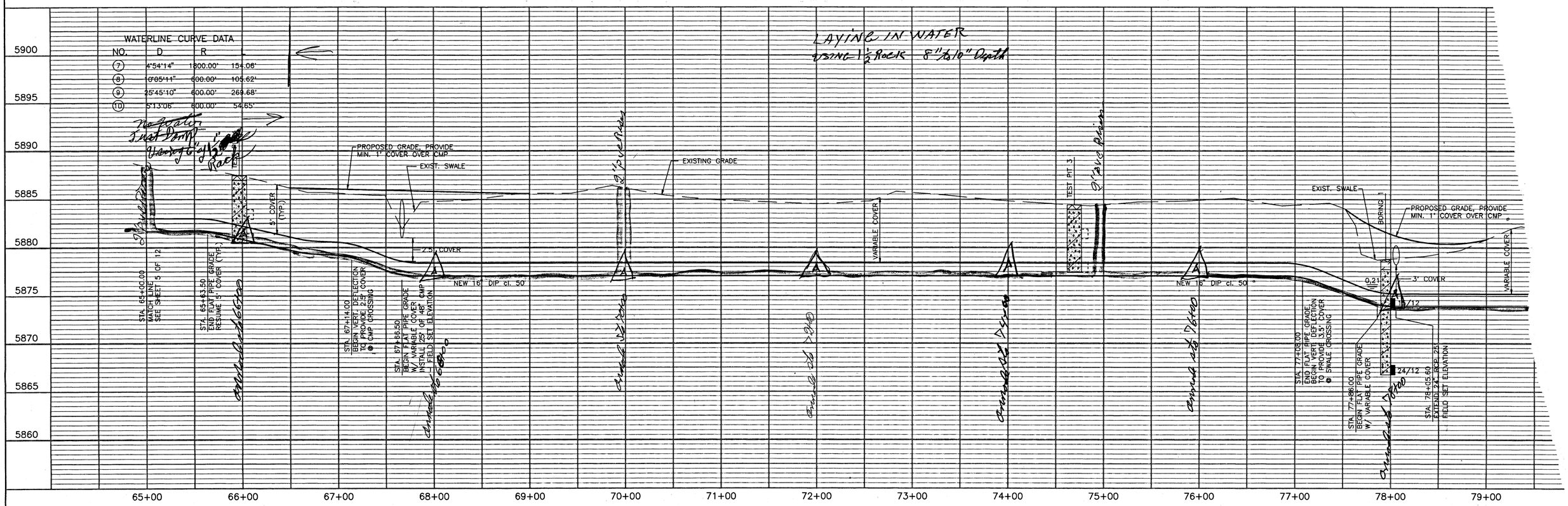

PKM CIVIL ENGINEERS
118 North Tejon Street Suite 302
Colorado Springs, Colorado 80903
(719) 473-0232 FAX (719) 471-7414

NO.	REVISIONS	BY	DATE

PREPARED UNDER THE SUPERVISION OF JOHN P. McGINN, P.E.

DESIGNED GCC | CHECKED JPM | SCALE 1" = 50'(H)

DRAWN CAD | DATE 7/06/93 | 1" = 5'(V)

CLIENT: WASTEWATER DEPARTMENT COLLECTION DIVISION
THE CITY OF COLORADO SPRINGS

TITLE: Nonpotable Water Line Replacement
Water Plan and Profile Sheet

JOB NO.

SHEET NO. 6

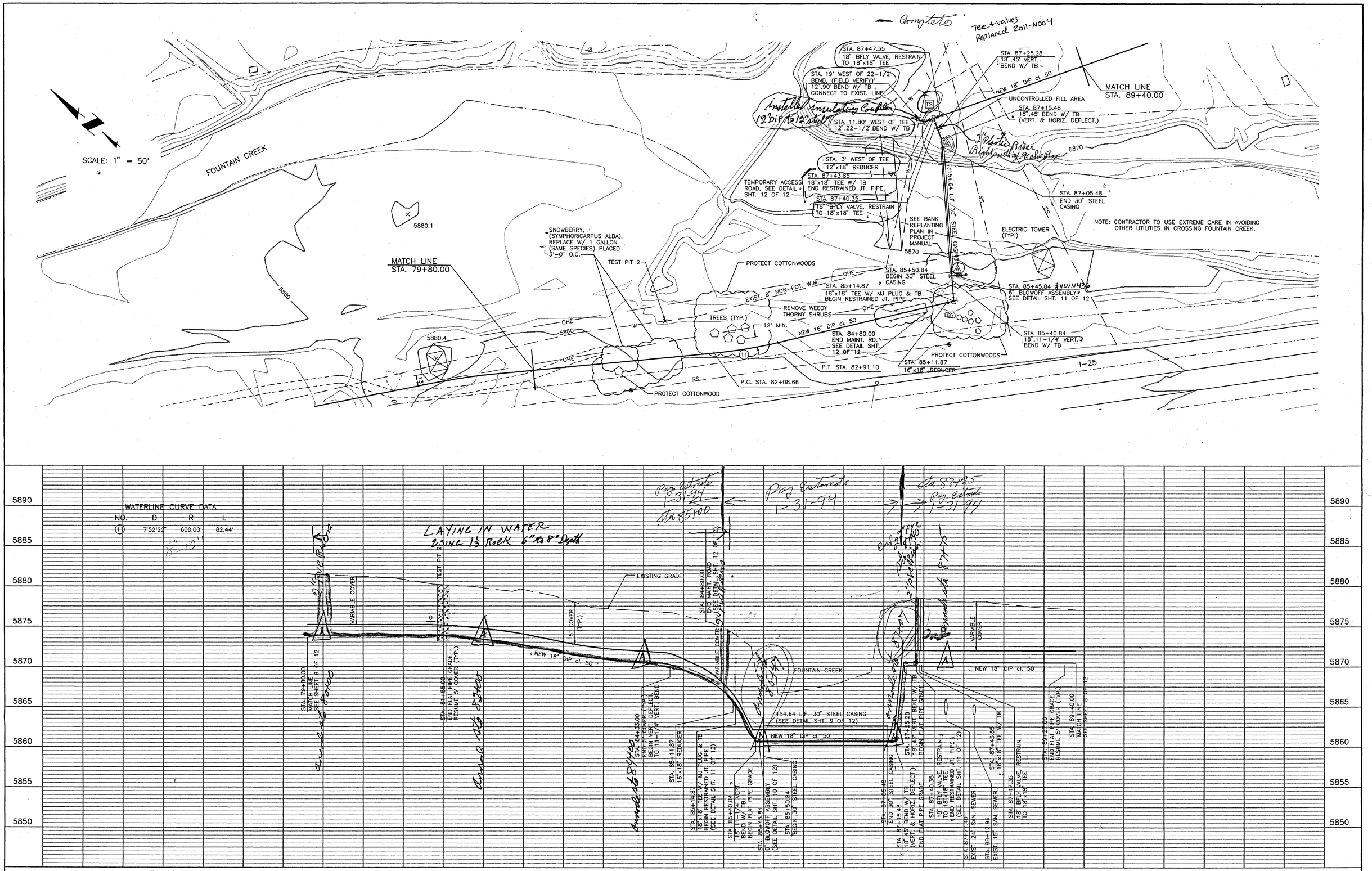

PKM CIVIL ENGINEERS
118 North Tejon Street Suite 302
Colorado Springs, Colorado 80903
(719) 473-0232 FAX (719) 471-7414

NO.	REVISIONS	BY	DATE

PREPARED UNDER THE SUPERVISION OF JOHN P. McGINN, P.E.

DESIGNED	GCC	CHECKED	JPM
DRAWN	CAD	DATE	7/06/93

SCALE 1" = 50'(H) 1" = 5'(V)

CLIENT: WASTEWATER DEPARTMENT COLLECTION DIVISION
THE CITY OF COLORADO SPRINGS

TITLE: Nonpotable Water Line Replacement
Water Plan and Profile Sheet

JOB NO. 167.1
SHEET NO. 7 OF 12 SHEETS

PKM CIVIL ENGINEERS
118 North Tejon Street Suite 302
Colorado Springs, Colorado 80903
(719) 473-0232 FAX (719) 471-7414

NO.	REVISIONS	BY	DATE

PREPARED UNDER THE SUPERVISION OF JOHN P. McGINN, P.E.

DESIGNED GCC | CHECKED JPM | SCALE 1" = 50'(H)

DRAWN CAD | DATE 7/06/93 | 1" = 5'(V)

CLIENT: WASTEWATER DEPARTMENT COLLECTION DIVISION
THE CITY OF COLORADO SPRINGS

TITLE: Nonpotable Water Line Replacement
Water Plan and Profile Sheet

JOB NO. 167.1

SHEET NO. 8 OF 12 SHEETS

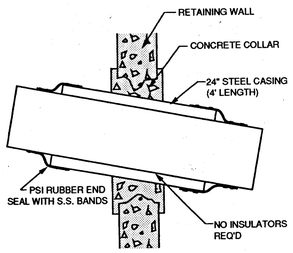

RETAINING WALL SLEEVE

N.T.S.

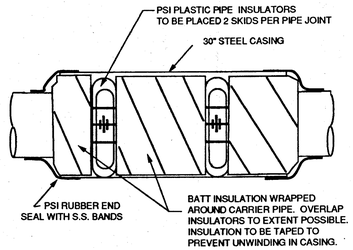

INSULATED CASING DETAIL

N.T.S.

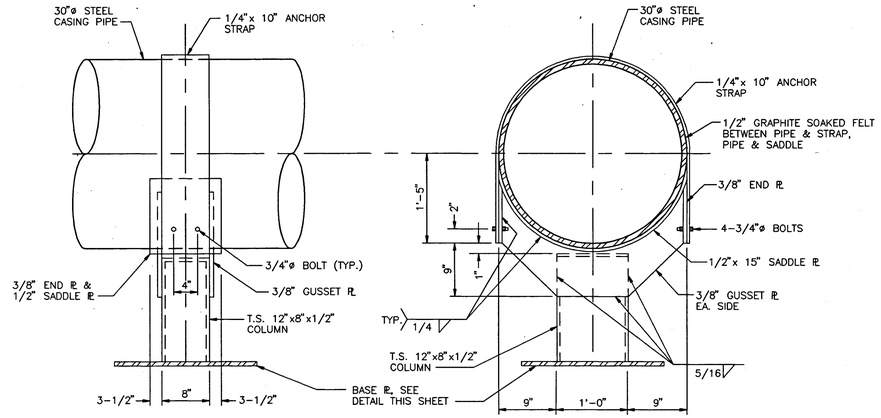

CASING PIPE ANCHOR DETAIL

SCALE: 1" = 1'-0"

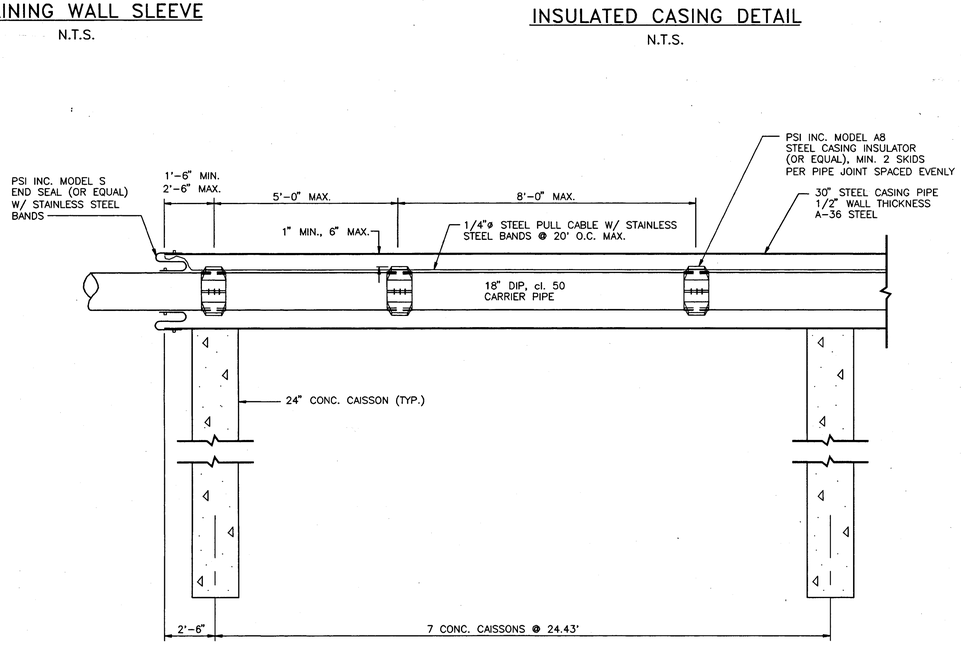

FOUNTAIN CREEK CROSSING

N.T.S.

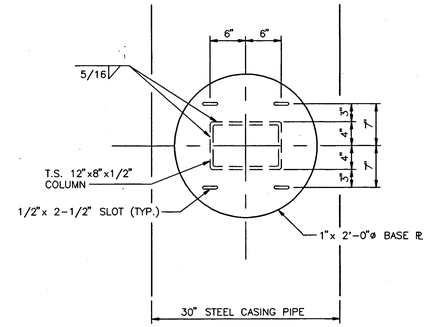

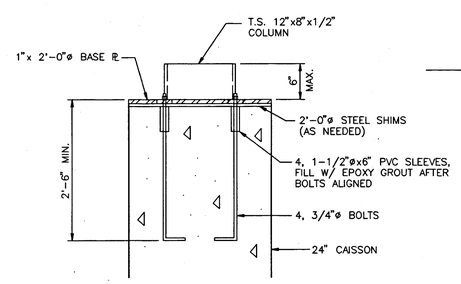

BASE PLATE DETAIL

N.T.S.

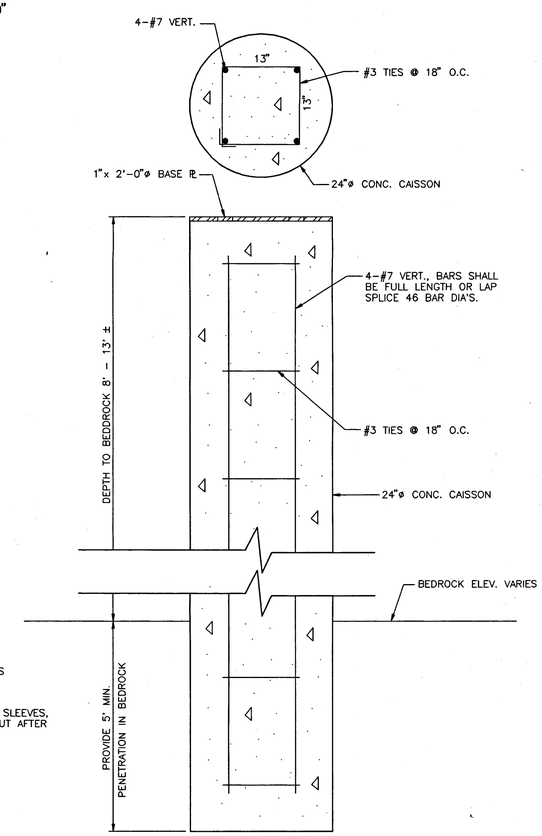

CAISSON DETAIL

N.T.S.

PKM CIVIL ENGINEERS
118 North Tejon Street Suite 302
Colorado Springs, Colorado 80903
(719) 473-0232 FAX (719) 471-7414

NO.	REVISIONS	BY	DATE

PREPARED UNDER THE SUPERVISION OF JOHN P. McGINN, P.E.
DESIGNED GCC CHECKED JPM SCALE: VARIES
DRAWN CAD DATE: 7/06/93

CLIENT: WASTEWATER DEPARTMENT COLLECTION DIVISION
THE CITY OF COLORADO SPRINGS

TITLE: Nonpotable Water Line Replacement
Crossing and Casing Details

JOB NO.: 167.1
SHEET NO. 9 OF 12 SHEETS

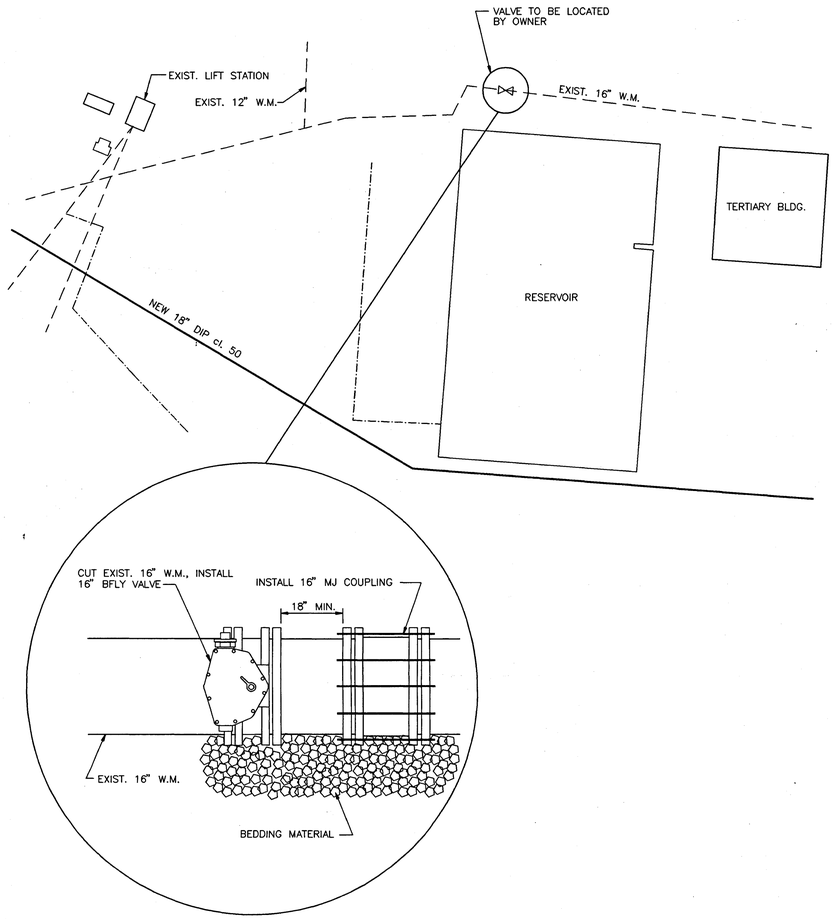

16" CUT-IN VALVE DETAIL

N.T.S.

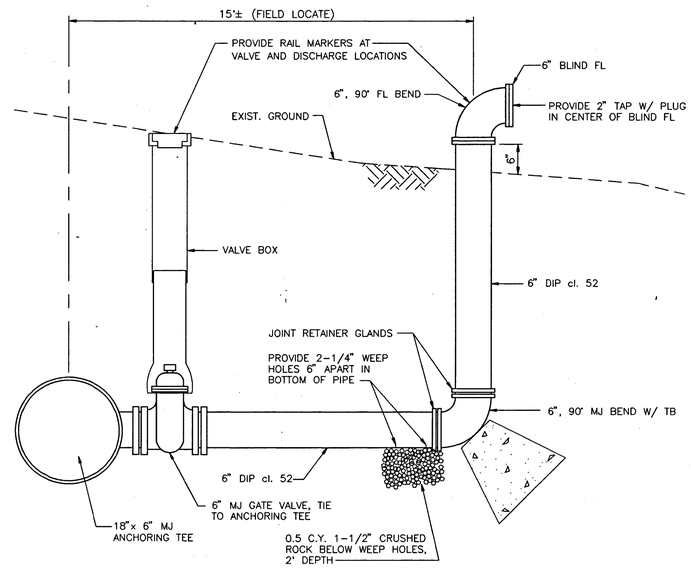

6" BLOWOFF ASSEMBLY

N.T.S.

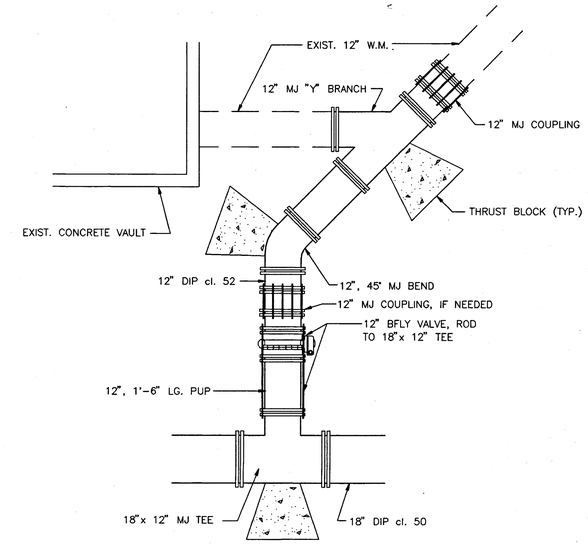

TIE-IN @ VAULT STA. 99+22.00

N.T.S.

PKM CIVIL ENGINEERS
118 North Tejon Street Suite 302
Colorado Springs, Colorado 80903
(719) 473-0232 FAX (719) 471-7414

NO.	REVISIONS	BY	DATE

PREPARED UNDER THE SUPERVISION OF JOHN P. McGINN, P.E.

DESIGNED GCC | CHECKED JPM | SCALE: VARIES

DRAWN CAD | DATE: 7/06/93

CLIENT: WASTEWATER DEPARTMENT COLLECTION DIVISION
THE CITY OF COLORADO SPRINGS

TITLE: Nonpotable Water Line Replacement
Piping & Connection Details

JOB NO.: 167.1

SHEET NO. 10 OF 12 SHEETS

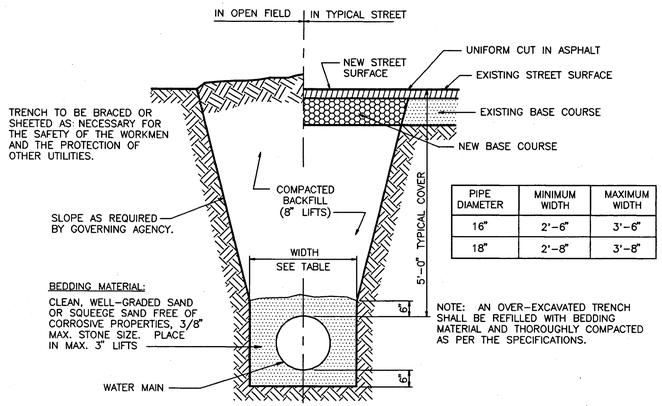

PIPE DIAMETER	MINIMUM WIDTH	MAXIMUM WIDTH
16"	2'-6"	3'-6"
18"	2'-8"	3'-8"

NOTE: AN OVER-EXCAVATED TRENCH SHALL BE REFILLED WITH BEDDING MATERIAL AND THOROUGHLY COMPACTED AS PER THE SPECIFICATIONS.

TYPICAL TRENCH SECTION

N.T.S.

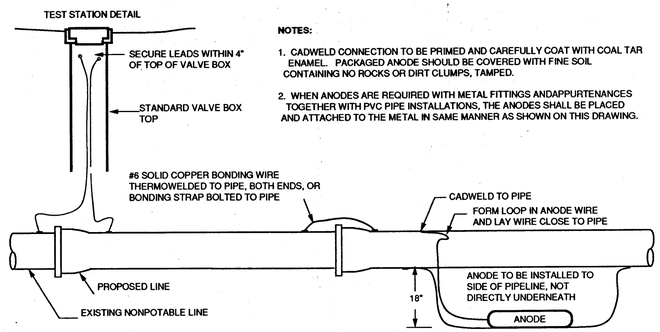

NOTES:

1. CADWELD CONNECTION TO BE PRIMED AND CAREFULLY COAT WITH COAL TAR ENAMEL. PACKAGED ANODE SHOULD BE COVERED WITH FINE SOIL CONTAINING NO ROCKS OR DIRT CLUMPS, TAMPED.
2. WHEN ANODES ARE REQUIRED WITH METAL FITTINGS ANDAPPURTENANCES TOGETHER WITH PVC PIPE INSTALLATIONS, THE ANODES SHALL BE PLACED AND ATTACHED TO THE METAL IN SAME MANNER AS SHOWN ON THIS DRAWING.

ANODE INSTALLATION AND BONDING DETAIL

N.T.S.

VEGETATION AND PLANTING NOTES

1	2 COTTONWOODS TO BE DISTURBED. REPLACE WITH 2 WESTERN CATALPA (CATALPA SPECIOSA) 2-1/2"
2	3 TO 5 COTTONWOODS, 1 WILLOW (PEACH-LEAF). PROTECT IF POSSIBLE. KEEP ALL EXCAVATED DIRT AWAY FROM ROOTS AND MINIMIZE ROOT DAMAGE (CUTTING).
3	DENSE GROVE OF YOUNG COTTONWOODS; SOME REMOVAL OF TREES IS NECESSARY, HOWEVER THOSE TREES OUTSIDE THE WATERLINE CONSTRUCTION AREA SHOULD BE PROTECTED.
4	3 COTTONWOODS, REMOVE AND REPLACE WITH 3 WESTERN CATALPA (CATALPA SPECIOSA) 2-1/2". 1 WILLOW (PEACH-LEAF), REMOVE AND REPLACE WITH HACKBERRY (CELTIS OCCIDENTALIS)
5	EROSION ALONG THE CREEK BANK IS CURRENTLY PREVENTED BY WILLOW AND DOGWOOD ROOTS. CARE SHOULD BE TAKEN TO NOT DISTURB THE SLOPE. IF SLOPE IS DISTURBED INSTALL EROSION CONTROL NETTING AND REPLACE THE WILLOW AND DOGWOOD ROOTS IN THE NETTING.
6	JUNIPERUS SCOPULORUM, WHITE SNOWBERRY (SYMPHORICARPOS ALBUS). PROTECT IF POSSIBLE. IF REMOVED, REPLACE WITH 10 GALLON JUNIPERUS SCOPULORUM AND 1 GALLON WHITE SNOWBERRY, ALL @ 3'-0" O.C.
7	JUNIPERUS SCOPULORUM, WHITE SNOWBERRY (SYMPHORICARPOS ALBUS). PROTECT IF POSSIBLE. IF REMOVED, REPLACE WITH 10 GALLON JUNIPERUS SCOPULORUM AND 1 GALLON WHITE SNOWBERRY, ALL @ 3'-0" O.C.

FOR COMPLETE PLANTING INFORMATION REFER TO THE PROJECT MANUAL.

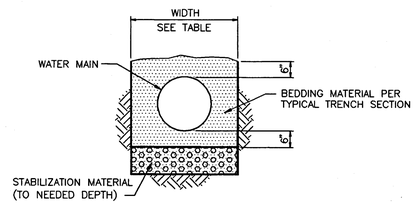

UNSTABLE TRENCH/BEDDING DETAIL

N.T.S.

RESTRAINING ROD TABLE

PIPE DIAMETER	MINIMUM ROD SIZE	MINIMUM # RODS
6"	0.75	2
12"	0.875	2
16"	1.25	3
18"	1.5	3
24"	1.5	5

MINIMUM JOINT RESTRAINT LENGTHS

PIPE DIAMETER	LENGTH EITHER SIDE OF FITTING (FT.)				
	TEE	90°	45°	22.5°	11.25°
6"	37	26	12	12	12
12"	70	50	21	12	12
16"	90	65	27	13	12
18"	100	72	30	14	12
24"	126	94	39	19	12

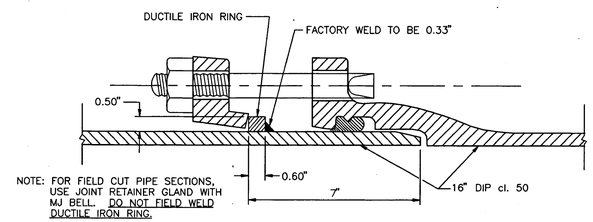

NOTE: FOR FIELD CUT PIPE SECTIONS, USE JOINT RETAINER GLAND WITH MJ BELL. DO NOT FIELD WELD DUCTILE IRON RING.

RESTRAINED MECHANICAL JOINT DETAIL

N.T.S.

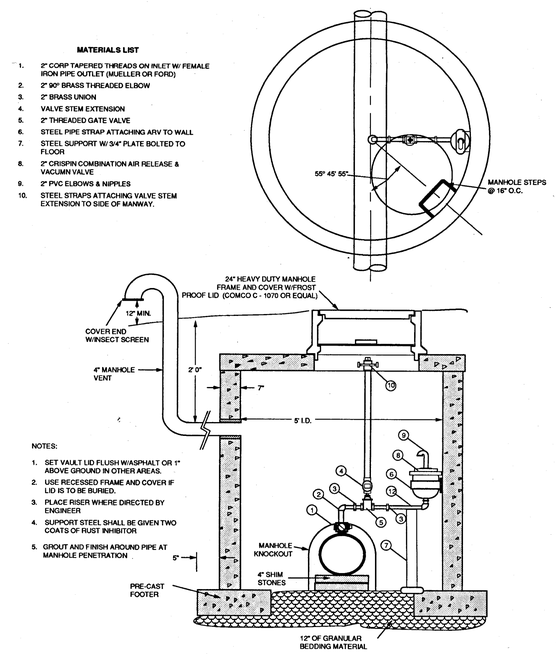

MATERIALS LIST

1. 2" CORP TAPERED THREADS ON INLET W/ FEMALE IRON PIPE OUTLET (MUELLER OR FORD)
2. 2" 90° BRASS THREADED ELBOW
3. 2" BRASS UNION
4. VALVE STEM EXTENSION
5. 2" THREADED GATE VALVE
6. STEEL PIPE STRAP ATTACHING ARV TO WALL
7. STEEL SUPPORT W/ 3/4" PLATE BOLTED TO FLOOR
8. 2" CRISPIN COMBINATION AIR RELEASE & VACUMN VALVE
9. 2" PVC ELBOWS & NIPPLES
10. STEEL STRAPS ATTACHING VALVE STEM EXTENSION TO SIDE OF MANWAY.

NOTES:

1. SET VAULT LID FLUSH W/ASPHALT OR 1" ABOVE GROUND IN OTHER AREAS.
2. USE RECESSED FRAME AND COVER IF LID IS TO BE BURIED.
3. PLACE RISER WHERE DIRECTED BY ENGINEER
4. SUPPORT STEEL SHALL BE GIVEN TWO COATS OF RUST INHIBITOR
5. GROUT AND FINISH AROUND PIPE AT MANHOLE PENETRATION

AIR RELEASE AND VACUUM VALVE IN VAULT

N.T.S.

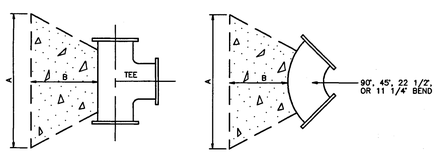

DIMENSIONS AND VOLUMES (SEE ISOMETRIC VIEW)

SIZE	TEE				90°				45°				22 1/2°				11 1/4°			
	in.	in.	in.	c.y.	in.	in.	in.	c.y.	in.	in.	in.	c.y.	in.	in.	in.	c.y.	in.	in.	in.	c.y.
	A	B	C	VOL	A	B	C	VOL	A	B	C	VOL	A	B	C	VOL	A	B	C	VOL
6"	3'-2"	2'-5"	1'-6"	0.50	4'-0"	2'-6"	1'-6"	0.75	3'-2"	2'-5"	1'-6"	0.50	2'-6"	0'-10"	1'-6"	0.13	2'-6"	0'-10"	1'-6"	0.13
12"	5'-7"	3'-5"	1'-6"	1.75	6'-4"	3'-7"	2'-0"	2.50	4'-10"	3'-3"	1'-6"	1.25	3'-2"	2'-5"	1'-6"	0.50	2'-8"	1'-7"	1'-6"	0.25
16"	6'-9"	3'-7"	2'-0"	2.75	8'-1"	4'-0"	2'-0"	4.25	6'-3"	3'-4"	2'-0"	2.25	4'-0"	2'-2"	2'-0"	0.75	3'-2"	2'-0"	2'-0"	0.50
18"	7'-7"	4'-0"	2'-0"	3.75	8'-11"	4'-2"	2'-0"	5.25	6'-9"	3'-7"	2'-0"	2.75	4'-10"	2'-9"	2'-0"	1.25	3'-2"	2'-0"	2'-0"	0.50

NOTES:

1. THE MINIMUM A AND B DIMENSIONS FOR ANY BLOCK IS 1'-6".
2. THRUST BLOCK DIMENSIONS AND VOLUMES FOR DEAD ENDS SHALL BE THE SAME AS FOR TEE'S.
3. THE ABOVE VOLUMES ARE ROUNDED TO THE NEAREST PORTION OF A CUBIC YARD.
4. NUTS AND BOLTS SHALL REMAIN ACCESSABLE AND FREE OF SPLASHED CONCRETE. A BOND BREAKER IS REQUIRED BETWEEN FITTINGS AND CONCRETE.

ISOMETRIC VIEW SHOWING A, B, AND C DIMENSIONS

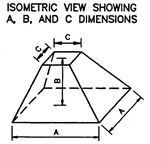

THRUST BLOCK DETAIL

N.T.S.

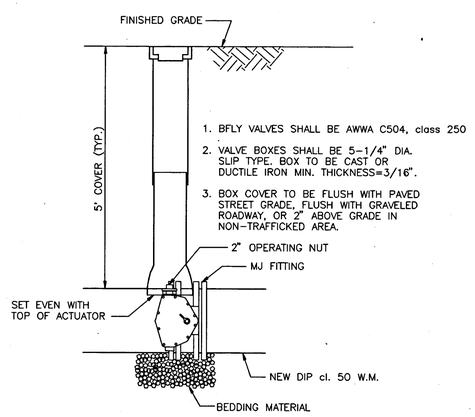

1. BFLY VALVES SHALL BE AWWA C504, class 250
2. VALVE BOXES SHALL BE 5-1/4" DIA. SLIP TYPE. BOX TO BE CAST OR DUCTILE IRON MIN. THICKNESS=3/16".
3. BOX COVER TO BE FLUSH WITH PAVED STREET GRADE, FLUSH WITH GRAVELED ROADWAY, OR 2" ABOVE GRADE IN NON-TRAFFICKED AREA.

IN-LINE BFLY VALVE ASSEMBLY

N.T.S.

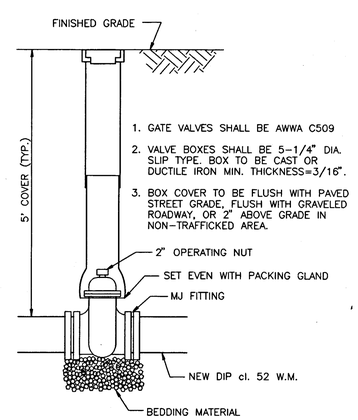

1. GATE VALVES SHALL BE AWWA C509
2. VALVE BOXES SHALL BE 5-1/4" DIA. SLIP TYPE. BOX TO BE CAST OR DUCTILE IRON MIN. THICKNESS=3/16".
3. BOX COVER TO BE FLUSH WITH PAVED STREET GRADE, FLUSH WITH GRAVELED ROADWAY, OR 2" ABOVE GRADE IN NON-TRAFFICKED AREA.

IN-LINE GATE VALVE ASSEMBLY

N.T.S.

PKM CIVIL ENGINEERS
118 North Tejon Street Suite 302
Colorado Springs, Colorado 80903
(719) 473-0232 FAX (719) 471-7414

NO.	REVISIONS	BY	DATE

PREPARED UNDER THE SUPERVISION OF JOHN P. McGINN, P.E.
DESIGNED GCC | CHECKED JPM | SCALE: VARIES
DRAWN CAD | DATE: 7/06/93

CLIENT: WASTEWATER DEPARTMENT COLLECTION DIVISION
THE CITY OF COLORADO SPRINGS

TITLE: Nonpotable Water Line Replacement
Typical Water Line Details

JOB NO.: 167.1
SHEET NO. 11 OF 12 SHEETS

SCALE: 1" = 300'

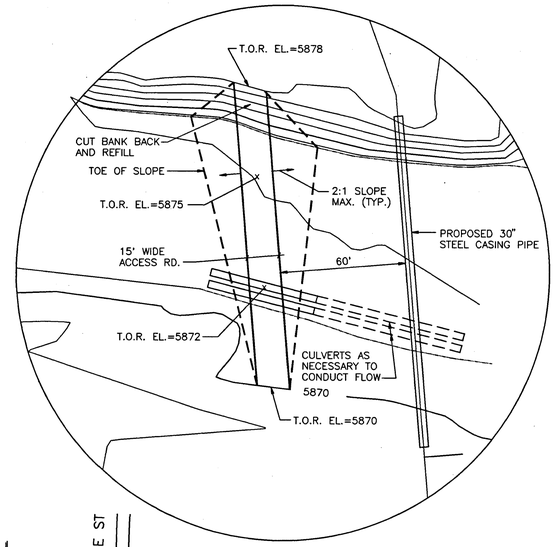

ACCESS #4 DETAIL

N.T.S.

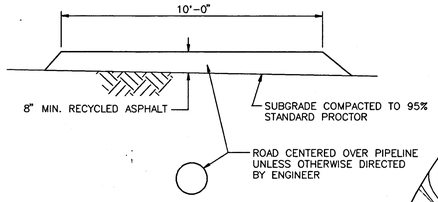

MAINTENANCE ROAD

N.T.S.

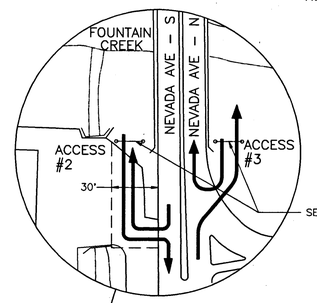

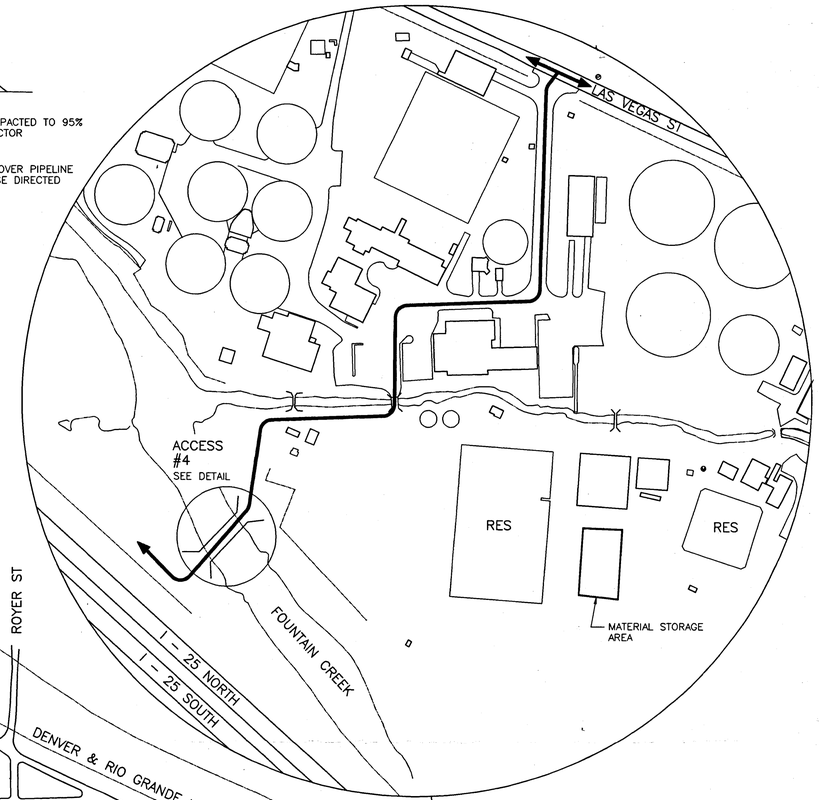

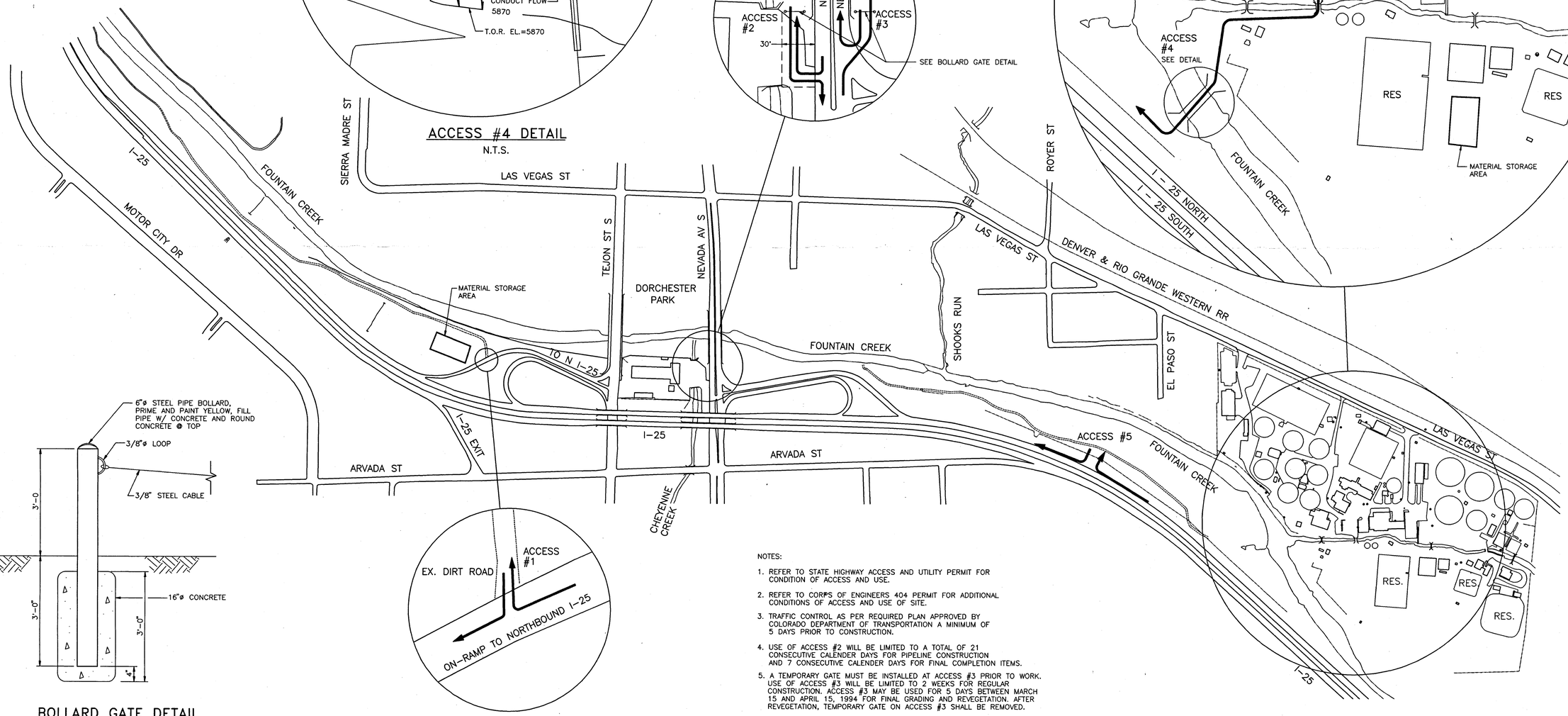

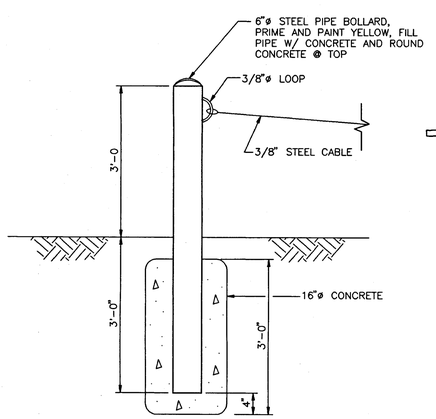

BOLLARD GATE DETAIL

N.T.S.

NOTES:

1. REFER TO STATE HIGHWAY ACCESS AND UTILITY PERMIT FOR CONDITION OF ACCESS AND USE.
2. REFER TO CORPS OF ENGINEERS 404 PERMIT FOR ADDITIONAL CONDITIONS OF ACCESS AND USE OF SITE.
3. TRAFFIC CONTROL AS PER REQUIRED PLAN APPROVED BY COLORADO DEPARTMENT OF TRANSPORTATION A MINIMUM OF 5 DAYS PRIOR TO CONSTRUCTION.
4. USE OF ACCESS #2 WILL BE LIMITED TO A TOTAL OF 21 CONSECUTIVE CALENDER DAYS FOR PIPELINE CONSTRUCTION AND 7 CONSECUTIVE CALENDER DAYS FOR FINAL COMPLETION ITEMS.
5. A TEMPORARY GATE MUST BE INSTALLED AT ACCESS #3 PRIOR TO WORK. USE OF ACCESS #3 WILL BE LIMITED TO 2 WEEKS FOR REGULAR CONSTRUCTION. ACCESS #3 MAY BE USED FOR 5 DAYS BETWEEN MARCH 15 AND APRIL 15, 1994 FOR FINAL GRADING AND REVEGETATION. AFTER REVEGETATION, TEMPORARY GATE ON ACCESS #3 SHALL BE REMOVED.
6. ACCESS #3 MAY NOT BE USED DURING PEAK TRAFFIC HOURS: 7:30 AM TO 8:30 AM; 12:00 PM TO 1:00 PM; 4:00 PM TO 5:30 PM.

PKM CIVIL ENGINEERS
118 North Tejon Street Suite 302
Colorado Springs, Colorado 80903;
(719) 473-0232 FAX (719) 471-7414

NO.	REVISIONS	BY	DATE

PREPARED UNDER THE SUPERVISION OF JOHN P. McGINN, P.E.

DESIGNED CAB	CHECKED JPM	SCALE: VARIES
DRAWN CAD	DATE: 7/06/93	

CLIENT: WASTEWATER DEPARTMENT COLLECTION DIVISION
THE CITY OF COLORADO SPRINGS

TITLE: Nonpotable Water Line Replacement
Access Plan

JOB NO.: 167.1

SHEET NO. 12 OF 12 SHEETS