Oversight / NHS	
FHWA REGION VIII OVERSIGHT?	□ NO ■ YES
NATIONAL HIGHWAY SYSTEM?	□ NO ■ YES

DEPARTMENT OF TRANSPORTATION
STATE OF COLORADO

CONSTRUCTION PLANS OF PROPOSED
FEDERAL AID PROJECT NO. FBR 0704-230
INTERSTATE NO. 70 / HAVANA STREET
DENVER COUNTY
CONSTRUCTION PROJECT CODE NO. 19339

Related Projects:
P. E. UNDER PROJECT:
Project Number
Project Code:

R.O.W. Projects:
R.O.W. Project Description FBR 0704-230
19339

TABULATION OF LENGTH

STATION	FEET ROADWAY I-70	FEET MAJOR STRUCTURE
I-70		
BEGIN PROJECT STA 4084+59.00		
BEGIN STR E-17-VE STA 4104+52.44	1993.44	
END STR E-17-VE STA 4104+96.44		44.00
BEGIN STR E-17-VD STA 4106+43.92	147.48	
END STR E-17-VD STA 4108+01.95		158.03
END PROJECT STA 4204+40.17	9638.22	
TOTAL	11779.14	202.03

SUMMARY OF PROJECT LENGTH	FEET	MILES
ROADWAY (NET LENGTH)	11779.14	2.23
MAJOR STRUCTURE	202.03	0.04
PROJECT GROSS LENGTH	11981.17	2.27

DESIGN DATA

	I-70	LOOP RAMPS	NON LOOP RAMPS
MINIMUM RADIUS OF CURVE	NA	159'	355'
MAXIMUM GRADE	3.56%	5.54%	3.15%
MINIMUM SSD HORIZONTAL	>730'	>155'	>250'
MINIMUM SSD VERTICAL	733'	324'	379'
MAXIMUM DESIGN SPEED	70 mph	25 mph	35 mph
2035 DESIGN DHV	22,400		
2035 DESIGN ADT	280,043		
DHV TRUCK %	8.60%		
CLEAR ZONE DISTANCE (TANGENT)	30'	14'	20'
CLEAR ZONE DISTANCE (CURVE)	NA	21'	28'

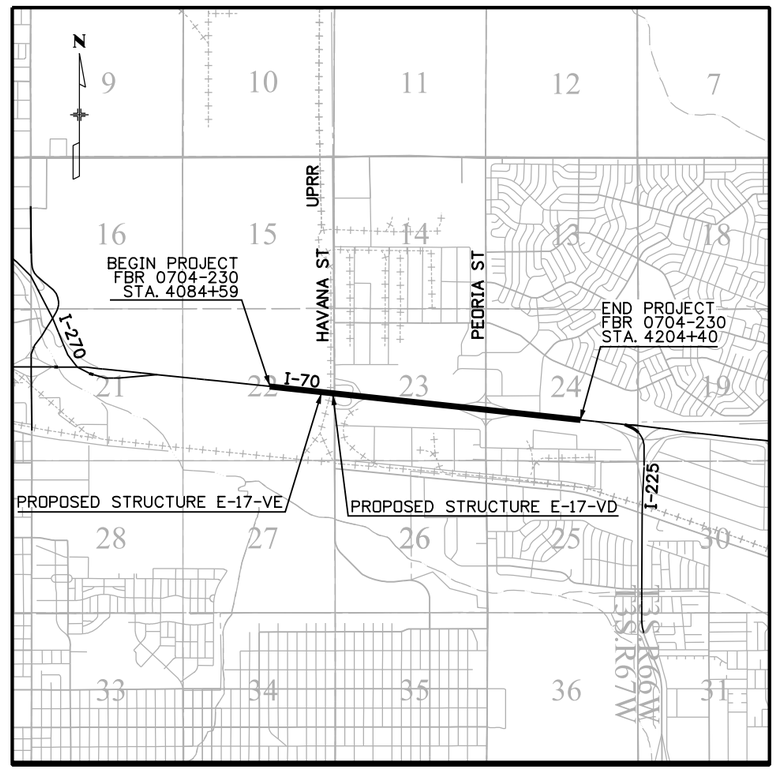

PROJECT LOCATION MAP

0' 2640' 5280' 10560'

INDEX OF SHEETS

1	TITLE SHEET
2	STANDARD PLANS LIST
3 - 4	GENERAL NOTES
5 - 11	TYPICAL SECTIONS
12	ROADWAY QUANTITY TABULATION
13	GEOMETRY PLANS
14 - 15	WALL GEOMETRY PLANS
16 - 19	REMOVAL AND RESET PLANS
20 - 23	GORE DETAILS
24 - 25	MISCELLANEOUS DETAILS
26 - 34	ROADWAY PLAN AND PROFILE
35	RECONSTRUCTION AREA - PAVING PLANS
36 - 38	OVERLAY AREA - PAVING PLANS
39 - 98	BRIDGE PLANS
99 - 130	RETAINING WALL PLANS
131 - 134	GRADING PLANS
135 - 142	DRAINAGE PLANS
143 - 146	UTILITY PLANS
147 - 157	SIGNING AND STRIPING PLANS
158 - 161	SIGN DETAILS
162 - 175	ITS PLANS
176 - 204	CONSTRUCTION TRAFFIC CONTROL PLANS
X1 - X23	CROSS SECTIONS

RFC02 JUNE, 2015 (REVIEW)

bob.harr 6:43:03 PM P:\13033540B - I-70 over Havana DB\19339\Design\Drawings\19339_Title.dgn

Print Date: 6/29/2015
File Name: 19339_Title.dgn
Horiz. Scale: 1:1 Vert. Scale: As Noted

LAWRENCE
TSIOUVARAS SIMMONS HOLDERNESS
CONSULTING ENGINEERS

Sheet Revisions		
Date:	Comments	Init.

Colorado Department of Transportation
4670 N. Holly
Denver, CO 80216
Phone: 303-398-6767 FAX: 303-398-6781
Region 1 KK

As Constructed
No Revisions:
Revised:
Void:

Contract Information	
Contractor: Lawrence Construction Company	
Resident Engineer: Kurt Kionka	
Project Engineer: David Kosmiski	
PROJECT STARTED:	ACCEPTED:
Comments:	

Project No./Code
FBR 0704-230
19339
Sheet Number 1

PLAN NUMBER	NEW OR REVISED	M STANDARD TITLE	PAGE NUMBER
M-100-1		STANDARD SYMBOLS (3 SHEETS)	1-3
M-100-2		ACRONYMS AND ABBREVIATIONS (4 SHEETS)	4-7
M-203-1	☐	APPROACH ROADS (REVISED ON JULY 08, 2013)	~~8~~
M-203-2		DITCH TYPES	9
M-203-11		SUPERELEVATION CROWNED AND DIVIDED HIGHWAYS (3 SHEETS)	10-12
M-203-12		SUPERELEVATION STREETS (2 SHEETS)	13-14
M-206-1		EXCAVATION AND BACKFILL FOR STRUCTURES (2 SHEETS)	15-16
M-206-2		EXCAVATION AND BACKFILL FOR BRIDGES (2 SHEETS)	17-18
M-208-1		TEMPORARY EROSION CONTROL (12 SHEETS)	19-30
M-210-1		MAILBOX SUPPORTS (2 SHEETS)	31-32
M-214-1		PLANTING DETAILS	33
M-412-1	■	CONCRETE PAVEMENT JOINTS (5 SHEETS) (REVISED ON JULY 24, 2012)	~~34-38~~
M-510-1		STRUCTURAL PLATE PIPE H-20 LOADING	39
M-601-1	☐	SINGLE CONCRETE BOX CULVERT (2 SHEETS) (REVISED ON AUGUST 27, 2013)	~~40-41~~
M-601-2	☐	DOUBLE CONCRETE BOX CULVERT (2 SHEETS) (REVISED ON AUGUST 27, 2013)	~~42-43~~
M-601-3	☐	TRIPLE CONCRETE BOX CULVERT (2 SHEETS) (REVISED ON AUGUST 27, 2013)	~~44-45~~
M-601-10		HEADWALL FOR PIPES	46
M-601-11		TYPE "S" SADDLE HEADWALLS FOR PIPE	47
M-601-12		HEADWALLS AND PIPE OUTLET PAVING	48
M-601-20		WINGWALLS FOR PIPE OR BOX CULVERTS	49
M-603-1	■	METAL PIPE (4 SHEETS). (REVISED ON OCTOBER 02, 2014)	~~50-53~~
M-603-2	☐	REINFORCED CONCRETE PIPE. (REVISED ON OCTOBER 02, 2014)	~~54~~
M-603-3		PRECAST CONCRETE BOX CULVERT	55
M-603-4	■	CORRUGATED POLYETHYLENE PIPE (AASHTO M294) (REVISED ON OCT. 02, 2014).	~~56~~
M-603-5	☐	POLYVINYL CHLORIDE (PVC) PIPE (AASHTO M304). (REVISED ON OCT. 02, 2014).	~~57~~
M-603-6	☐	STEEL REINFORCED POLYETHYLENE RIBBED PIPE (AASHTO MP 20) (NEW ON APRIL 30, 2015)	
M-603-10		CONCRETE AND METAL END SECTIONS (2 SHEETS)	58-59
M-604-10		INLET, TYPE C	60
M-604-11		INLET, TYPE D	61
M-604-12		CURB INLET TYPE R (2 SHEETS)	62-63
M-604-13		CONCRETE INLET TYPE 13	64
M-604-20		MANHOLES (3 SHEETS)	65-67
M-604-25		VANE GRATE INLET (5 SHEETS)	68-72
M-605-1		SUBSURFACE DRAINS	73
M-606-1	■	GUARDRAIL TYPE 3 W-BEAM (19 SHEETS). (REVISED ON OCT. 27, 2014)	~~74-92~~
M-606-13	■	GUARDRAIL TYPE 7 F-SHAPE BARRIER (4 SHEETS) (REVISED ON AUGUST 30, 2013)	~~93-96~~
M-606-14		PRECAST TYPE 7 CONCRETE BARRIER (3 SHEETS)	97-99

PLAN NUMBER	NEW OR REVISED	M STANDARD TITLE	PAGE NUMBER
M-607-1		WIRE FENCES AND GATES (3 SHEETS)	100-102
M-607-2		CHAIN LINK FENCE (3 SHEETS)	103-105
M-607-3		BARRIER FENCE	106
M-607-4	☐	DEER FENCE, GATES, AND GAME RAMPS (5 SHEETS) (REVISED ON APRIL 30, 2015)	~~107-109~~
M-607-10		PICKET SNOW FENCE	110
M-607-15		ROAD CLOSURE GATE (9 SHEETS)	111-119
M-608-1	☐	CURB RAMPS (7 SHEETS) (REVISED ON JUNE 16, 2014)	~~120-125~~
M-609-1	■	CURBS, GUTTERS, AND SIDEWALKS (4 SHEETS) (REVISED ON JULY 24, 2012).	~~126-129~~
M-611-1		CATTLE GUARD (2 SHEETS)	130-131
M-611-2	☐	DEER GUARD (2 SHEETS) (NEW ON APRIL 30, 2015)	
M-613-1		ROADWAY LIGHTING (4 SHEETS)	132-135
M-614-1		RUMBLE STRIPS (3 SHEETS)	136-138
M-614-2		SAND BARREL ARRAYS (2 SHEETS)	139-140
M-615-1		EMBANKMENT PROTECTOR TYPE 3	141
M-615-2		EMBANKMENT PROTECTOR TYPE 5	142
M-616-1		INVERTED SIPHON	143
M-620-1		FIELD LABORATORY CLASS 1	144
M-620-2		FIELD LABORATORY CLASS 2 (2 SHEETS)	145-146
M-620-11		FIELD OFFICE CLASS 1	147
M-620-12		FIELD OFFICE CLASS 2	148
M-629-1		SURVEY MONUMENTS (2 SHEETS)	149-150

COLORADO
DEPARTMENT OF TRANSPORTATION

M&S STANDARDS PLANS LIST

July 04, 2012

Revised on April 30, 2015

ALL OF THE M&S STANDARD PLANS, AS SUPPLEMENTED AND REVISED, APPLY TO THIS PROJECT WHEN USED BY DESIGNATED PAY ITEM OR SUBSIDIARY ITEM.

NEW OR REVISED STANDARD PLAN SHEETS APPLICABLE TO THIS PROJECT, INDICATED BY A MARKED BOX ■, WILL BE ATTACHED TO THE PLANS.

PLAN NUMBER	NEW OR REVISED	S STANDARD TITLE	PAGE NUMBER
S-612-1		DELINEATOR INSTALLATIONS (7 SHEETS)	151-157
S-614-1	■	GROUND SIGN PLACEMENT (2 SHEETS) (REVISED ON DECEMBER 12, 2014).	~~158-159~~
S-614-2		CLASS I SIGNS	160
S-614-3		CLASS II SIGNS	161
S-614-4	■	CLASS III SIGNS (3 SHEETS) (REVISED ON DECEMBER 17, 2014)	~~162-164~~
S-614-5		BREAK-AWAY SIGN SUPPORT DETAILS FOR GROUND SIGNS (2 SHEETS)	165-166
S-614-6	■	CONCRETE FOOTINGS AND SIGN ISLANDS FOR CLASS III SIGNS (2 SHEETS) (REVISED ON SEPTEMBER 16, 2013)	~~167-168~~
S-614-8	■	TUBULAR STEEL SIGN SUPPORT DETAILS (6 SHEETS) (REVISED ON OCTOBER 23, 2014)	~~169-173~~
S-614-9		PEDESTRIAN PUSH BUTTON POST ASSEMBLY	174
S-614-10		MARKER ASSEMBLY INSTALLATIONS	175
S-614-11		MILEPOST SIGN DETAIL FOR HIGH SNOW AREAS	176
S-614-12		STRUCTURE NUMBER INSTALLATION	177
S-614-14		FLASHING BEACON AND SIGN INSTALLATIONS (3 SHEETS)	178-180
S-614-20		TYPICAL POLE MOUNT SIGN INSTALLATIONS	181
S-614-21		CONCRETE BARRIER SIGN POST INSTALLATIONS	182
S-614-22		TYPICAL MULTI-SIGN INSTALLATIONS	183
S-614-40	☐	TYPICAL TRAFFIC SIGNAL INSTALLATION DETAILS (5 SHEETS) (REVISED ON APRIL 2, 2015)	~~184-188~~
S-614-40A	☐	ALTERNATIVE TRAFFIC SIGNAL INSTALLATION DETAILS (4 SHEETS) (REVISED ON APRIL 2, 2015)	~~189-192~~
S-614-41	☐	TEMPORARY SPAN WIRE SIGNALS (REVISED ON APRIL 2, 2015)	~~193~~
S-614-42		CABINET FOUNDATION DETAIL (4 SHEETS)	194-197
S-614-43		TRAFFIC LOOP AND MISCELLANEOUS SIGNAL DETAILS (10 SHEETS)	198-207
S-614-44	☐	PEDESTAL POLE SIGNALS (2 SHEETS) (REVISED ON NOVEMBER 03, 2014)	
S-614-50	■	STATIC SIGN MONOTUBE STRUCTURES (12 SHEETS) (REVISED ON NOVEMBER 28, 2012)	~~208-219~~
S-614-60	☐	DYNAMIC SIGN MONOTUBE STRUCTURES (14 SHEETS) (REVISED ON NOVEMBER 28, 2012)	~~220-233~~
S-627-1	■	PAVEMENT MARKINGS (5 SHEETS) (REVISED ON JUNE 10, 2014).	~~234-238~~
S-630-1	■	TRAFFIC CONTROLS FOR HIGHWAY CONSTRUCTION (20 SHEETS) (REVISED ON DECEMBER 08, 2014)	~~239-258~~
S-630-2		BARRICADES, DRUMS, CONCRETE BARRIERS (TEMP) AND VERTICAL PANELS	259
S-630-3		FLASHING BEACON (PORTABLE) DETAILS	260
S-630-4		STEEL SIGN SUPPORT (TEMPORARY) INSTALLATION DETAILS (2 SHEETS)	261-262
S-630-5	☐	PORTABLE RUMBLE STRIPS (TEMPORARY) (2 SHEETS) (REVISED ON JULY 26, 2013)	~~263-264~~
S-630-6		EMERGENCY PULL-OFF AREA (TEMPORARY)	265
S-630-7		ROLLING ROADBLOCKS FOR TRAFFIC CONTROL (3 SHEETS)	266-268

RFC02 JUNE, 2015 (REVIEW)

bob.harr 11:57:34 AM P:\1303354DB - I-70 over Havana DB\19339\Design\Drawings\19339_StdPlan.dgn

Print Date: 6/17/2015
File Name: 19339_StdPlan.dgn
Horiz. Scale: 1:1 Vert. Scale: As Noted

LAWRENCE
TSIOUVARAS SIMMONS HOLDERNESS
CONSULTING ENGINEERS

Sheet Revisions		
Date:	Comments	Init.

Colorado Department of Transportation
CDOT
4670 N. Holly
Denver, CO 80216
Phone: 303-398-6767 FAX: 303-398-6781
Region 1 KK

As Constructed
No Revisions:
Revised:
Void:

I-70 OVER HAVANA STREET DESIGN-BUILD
STANDARD PLANS LIST

Designer:	R. HARR	Structure Numbers	
Detailer:	R. HARR		
Sheet Subset:	STPLN	Subset Sheets:	1 of 1

Project No./Code
FBR 0704-230
19339
Sheet Number 2

GENERAL NOTES

CONSTRUCTION

1. ALL WORK SHALL BE IN ACCORDANCE WITH THE TECHNICAL REQUIREMENTS OF THE CONTRACT. THE CONTRACTOR SHALL INFORM THE ENGINEER OF ANY CONFLICTS TO THE CONTRACT DOCUMENTS.
2. CONSTRUCTION STAFF, SUBCONTRACTORS, MATERIAL SUPPLIERS, AND PERSONNEL SHALL REVIEW AND COMPLY WITH THE CONTRACT DOCUMENTS AND QUALITY CONTROL DOCUMENT.
3. FOR PRELIMINARY PLAN QUANTITIES OF PAVEMENT MATERIALS, THE FOLLOWING RATES OF APPLICATION WERE USED:
   HMA (GR. S)(100)(PG 64-22) @ 110 LBS/SQ. YD. /INCH
   SMA (FIBERS) (ASPHALT) @ 110 LBS/SQ. YD. /INCH
4. EXISTING I-70 ASPHALT PAVEMENT WITH RUTS SHALL BE MILLED TO A DEPTH OF 1/2" BELOW THE BOTTOM OF THE RUTS.
5. A TACK COAT IS REQUIRED BETWEEN LAYERS OF BITUMINOUS PAVEMENT. RATE OF APPLICATION SHALL BE 0.10 GAL./SQ. YD. OR AS DETERMINED BY THE ENGINEER AT THE TIME OF APPLICATION.
6. DILUTED EMULSIFIED ASPHALT FOR TACK COAT SHALL CONSIST OF 1 PART EMULSIFIED ASPHALT AND 1 PART WATER.
7. ALL REFERENCES TO SMA SHALL BE TAKEN TO BE STONE MATRIX ASPHALT (FIBERS)(ASPHALT) OR SMA (FIBERS)(ASPHALT).
8. THE NOMINAL MAXIMUM AGGREGATE SIZE FOR SMA SHALL BE 1/2 INCH.
9. SMA SHALL NOT CONTAIN ANY RECLAIMED ASPHALT PAVEMENT.
10. ANY CURB AND GUTTER OR ASPHALT OR CONCRETE PAVEMENT, WHICH IS TO REMAIN AND IS DAMAGED AS A RESULT OF THE CONTRACTOR'S OPERATION, SHALL BE REPLACED AT THE CONTRACTOR'S EXPENSE.
11. TO PROVIDE FOR ADEQUATE SULFATE RESISTANCE IN ALL CONCRETE SUPPLIED, SEVERITY OF POTENTIAL EXPOSURE SHALL BE CLASS 0 FOR THIS PROJECT, AS RECOMMENDED BY THE GEOTECHNICAL REPORT.
12. WHERE IT IS REQUIRED TO CUT EXISTING PAVEMENT, THE CUTTING SHALL BE DONE TO A NEAT WORK LINE FULL DEPTH WITH A PAVEMENT CUTTING SAW OR OTHER METHOD AS APPROVED BY THE COOT PROJECT ENGINEER.
13. PATCHING OF PERMANENT PAVEMENT SHALL BE TO THE DEPTH OF THE SURROUNDING EXISTING / PROPOSED PAVEMENT AS DIRECTED BY CDOT. THE TOP LIFT MUST MATCH THE DEPTH OF THE 1ST LIFT OF THE PROPOSED PAVEMENT AND CONFORM TO THE REQUIREMENTS OF SMA (FIBERS) (ASPHALT). LOWER LIFT SHALL CONFORM TO THE REQUIREMENTS OF HMA (GRADING S) (100) (PG 64-22). THE MINIMUM AND MAXIMUM LIFT THICKNESSES SHALL BE 2 AND 3 INCHES, RESPECTIVELY, FOR SMA (FIBERS) (ASPHALT) AND 2.25 AND 3.5 INCHES, RESPECTIVELY, FOR HMA (GRADING S) (100) (PG 64-22). THE THICKNESS OF EACH LIFT SHALL BE LESS THAN OR EQUAL TO THE THICKNESS OF LIFT DIRECTLY BENEATH IT. THE CONTRACTOR SHALL PATCH AS DIRECTED BY CDOT. ALL PATCHING SHALL BE PER CDOT.
14. WATER SHALL BE USED AS A DUST PALLIATIVE WHERE REQUIRED.
15. THE FOLLOWING SHALL BE FURNISHED WITH EACH BITUMINOUS PAVER:
    A SKI TYPE DEVICE AT LEAST 30 FEET IN LENGTH, SHORT SKI OR SHOE. 500' OF CONTROL LINE AND STAKES.
16. ANY LAYER OF BITUMINOUS PAVEMENT, WITHIN EACH PHASE, THAT IS TO HAVE A SUCCEEDING LAYER PLACED THEREON SHALL BE COMPLETED FULL-WIDTH BEFORE A SUCCEEDING LAYER IS PLACED.
17. PAVEMENT SMOOTHNESS SHALL BE HRI CATEGORY II, EXCEPT OVERLAY AREAS WHICH SHALL BE HRI CATEGORY I.
18. FINAL ASPHALT JOINTS SHALL FALL ON LANE LINES OR SHOULDERS LINES, EXCEPT WHERE STATED IN THE PLANS.
19. THE CONTRACTOR SHALL NOT PARK ANY VEHICLES OR EQUIPMENT IN, OR DISTURB ANY AREAS NOT APPROVED BY THE ENGINEER.
20. THE CONTRACTOR SHALL BE RESPONSIBLE FOR MAINTAINING THE PRESENT CONDITION OF ANY EXISTING BUILDINGS, LANDSCAPING (INCLUDING IRRIGATION), FENCING, EQUIPMENT, WALKS, DRIVES, AND ATTACHMENTS. IF ANY DAMAGE OCCURS, THE CONTRACTOR SHALL BE RESPONSIBLE FOR RESTORING THE DAMAGE TO A BETTER OR NEW CONDITION AT THE CONTRACTOR'S EXPENSE.
21. ANY DISTURBANCE BEYOND THE LIMITS AS SHOWN IN THE PLANS SHALL BE RESTORED TO ORIGINAL CONDITION BY THE CONTRACTOR AT HIS OWN EXPENSE. CONSTRUCTION ACTIVITIES IN ADDITION TO NORMAL CONSTRUCTION PROCEDURES SHALL INCLUDE THE PARKING OF VEHICLES OR EQUIPMENT, DISPOSAL OF LITTER AND ANY OTHER ACTION WHICH WOULD ALTER EXISTING CONDITIONS.
22. ALL NEW GUARDRAIL TYPE 3 SHALL HAVE STEEL POSTS. ALL EXISTING TYPE 3 GUARDRAIL WITHIN THE PROJECT SHALL BE A MINIMUM OF 25 INCHES IN HEIGHT PER CDOT STANDARD PLAN M-606-1.
23. WHERE NEW PAVEMENT IS TO ABUT EXISTING PAVEMENT, THE EXISTING PAVEMENT SHALL BE REMOVED TO A NEAT VERTICAL LINE USING A CUTTING SAW OR OTHER METHOD AS APPROVED BY THE ENGINEER.
24. THE CONTRACTOR SHALL REPAIR OR REPLACE, AT HIS EXPENSE, ANY EXISTING SIGNS OR GUARDRAIL DAMAGED BY CONTRACTOR.
25. NO RIGHT-OF-WAY ACQUISITION WILL BE NEEDED FOR THIS PROJECT. ALL WORK WILL BE COMPLETED ENTIRELY WITHIN THE EXISTING RIGHT-OF-WAY.
26. EXISTING PAVEMENT DAMAGED BY THE CONSTRUCTION ON HAVANA STREET WILL BE REPAIRED BY 2" MILL AND 2" HMA OVERLAY. EXISTING SIDEWALK, CURB AND GUTTER ON HAVANA STREET DAMAGED BY CONSTRUCTION WILL BE REMOVED AND REPLACED PER CITY OF DENVER STANDARDS.

SURVEY

27. THE PRESERVATION OF SURVEY MARKERS AND MONUMENTS (INCLUDING GEODETIC MONUMENTATION) IS MANDATORY AND AFFECTS ALL GOVERMENTAL AGENCIES. THE CONTRACTOR SHALL NOTIFY THE AGENCY AFFECTED AS SOON AS IT BECOMES KNOWN THAT A MARKER IS IN A POSITION THAT WILL INTERFERE WITH NEW CONSTRUCTION OR WITH CONTRACTOR OPERATIONS. THE MARKER POSITION SHALL BE ACCURATELY DOCUMENTED PRIOR TO DISTURBING ANY SUCH MARKER IN ACCORDANCE WITH GOVERNMENTAL RULES AND SECTION 9.1.6 AND 9.1.7.

SIGNING, STRIPING, TRAFFIC CONTROL

28. ALL PAVEMENT MARKINGS SHALL BE INSTALLED ON A CLEAN SURFACE, AS CALLED FOR BY THE RESPECTIVE MANUFACTURERS. SURFACE CLEANING BY POWER WASH SHALL ALSO BE REQUIRED WHEN THERE IS A POSSIBILITY OF DEICING MATERIAL ON THE ROAD. EXISTING MARKINGS SHALL BE REMOVED TO THE MAXIMUM EXTENT PRACTICAL PRIOR TO INSTALLATION OF EPOXY PAVEMENT MARKINGS AND ANY SURFACE-APPLIED PREFORMED PLASTIC PAVEMENT MARKINGS. IT IS THE CONTRACTOR'S RESPONSIBILITY TO USE ANY MEANS NECESSARY TO ENSURE APPROPRIATE SURFACE PREPARATION. PRIOR TO THE PAVEMENT BEING PREPARED FOR STRIPING, THE CONTRACTOR SHALL REVIEW SECTION 107.25 AND ALL OF SECTION 208 IN THE CDOT STANDARD SPECIFICATIONS BOOK, TO PREVENT POLLUTANTS FROM ENTERING STORM DRAINS AND WATERWAYS.
29. CONSTRUCTION TRAFFIC CONTROL, PERMANENT SIGNING AND STRIPING, AND TEMPORARY SIGNING AND STRIPING SHALL CONFORM TO THE MANUAL OF UNIFORM TRAFFIC CONTROL DEVICES (MUTCD) CURRENT EDITION, STANDARD SPECIFICATIONS, NCHRP 350, AND M&S STANDARDS. THE CONTRACTOR SHALL SUBMIT A METHOD OF HANDLING TRAFFIC (MHT) TO THE ENGINEER FOR APPROVAL AT LEAST TWO WORKING DAYS PRIOR TO EACH APPLICABLE PHASE OF WORK.
30. THE CONTRACTOR SHALL REAPPLY TEMPORARY PAVEMENT MARKINGS AS NECESSARY TO ROADWAY SURFACES AND LOCAL DETOUR ROUTES WITHIN THE PROJECT LIMITS.
31. REMOVAL AND PLACEMENT OF TEMPORARY PAVEMENT MARKINGS SHALL NOT CAUSE PAVEMENT SCARRING ON THE FINAL LIFT OF PAVEMENT.

EARTHWORK

32. IMPORTED EMBANKMENT MATERIAL SHALL HAVE A MINIMUM R-VALUE OF 20 WHEN TESTED BY THE HVEEM STABILOMETER.
33. THE TYPE OF COMPACTION FOR THE PROJECT SHALL BE PER THE 2011 CDOT STANDART SPECIFICATIONS AND APPLICABLE STANDARD SPECIAL PROVISIONS WITH DEPTH OF MOISTURE-DENSITY CONTROL AS FOLLOWS:
    FULL DEPTH OF ALL EMBANKMENTS.
    SIX INCHES FOR BASES OF CUTS AND FILLS UNLESS OTHERWISE SPECIFIED.
    TWELVE INCHES UNDERNEATH THE PROPOSED PAVEMENT SECTION
    (PAVEMENT/BASE COURSE/MIN R-VALUE SOIL).
34. UPON ACCEPTANCE FROM CDOT, BROKEN CONCRETE AND BROKEN ASPHALT MAY BE USED FOR EMBANKMENT PROVIDED IT IS PLACED IN ACCORDANCE WITH SUBSECTION 203.06.
35. TESTING AND APPROVAL OF NEW EMBANKMENT AND AGGREGATE BASE COURSE SHALL BE COMPLETED PRIOR TO THE DELIVERY AND/OR PLACEMENT OF MATERIALS ON SITE.
36. AGGREGATE BASE COURSE (CLASS 6) SHALL MEET THE GRADATION REQUIREMENTS AND HAVE AN R-VALUE OF AT LEAST 78 WHEN TESTED BY HVEEM STABILOMETER.
37. ALL CUT AND FILL SLOPES SHALL BE ROUNDED AT THE THEIR MATCHES TO PROVIDE FOR A PLEASING APPEARANCE.
38. THE MINIMUM THICKNESS OF TOPSOIL SHALL BE 4 INCHES. IF TOPSOIL IS NOT GENERATED WITHIN THE PROJECT LIMITS, IMPORTED SOIL SHALL BE TREATED WITH A HERBICIDE APPLICATION AFTER PLACEMENT OF SOIL, AND BEFORE NATIVE SEEDING. HERBICIDE TREATMENT SHALL BE BY A LICENSED HERBICIDE APPLICATOR.

ENVIRONMENTAL

39. LOCATION OF ALL MOBILE CONCRETE WASHOUTS SHALL BE DETERMINED BY THE EROSION CONTROL SUPERVISOR.
40. ALL EROSION/SEDIMENT CONTROL BMPS SHALL BE PLACED AS NEEDED ACCORDING TO THE CONSTRUCTION PHASING AS APPROVED BY THE EROSION CONTROL SUPERVISOR.
41. ALL EROSION/SEDIMENT CONTROL AND STORMWATER RESPONSIBILITIES STATED IN THE STORMWATER MANAGEMENT PLAN, AND BOOK 2 SECTION 12 SHALL BE FOLLOWED.
42. SAW RESIDUE MATERIAL SHALL BE CONTAINED AND SHALL NOT RUNOFF INTO WATERS OF THE STATE, THROUGH INLETS OR BY ANY OTHER MEANS.

RFC02 JUNE, 2015 (REVIEW)

bob.harr 11:57:39 AM P:\13033540B - I-70 over Havana DB\19339\Design\Drawings\19339_GenNotes.dgn

GENERAL NOTES - CONTINUED

ENVIRONMENTAL (CONTINUED)

43. THE CONTRACTOR SHALL MAINTAIN ADEQUATE DRAINAGE AT ALL TIMES DURING CONSTRUCTION.
44. ALL INLETS AND OUTLETS NOT PROTECTED SHALL BE INSPECTED THROUGHOUT CONSTRUCTION TO ENSURE THAT NO MILLINGS OR OTHER CONSTRUCTION DEBRIS ENTERS THEM. IF CONSTRUCTION DEBRIS OF ANY KIND ENTERS THE INLETS OR OUTLETS, THEY SHALL BE CLEANED AT THE CONTRACTOR'S EXPENSE.
45. A THOROUGH INSPECTION OF THE STORM WATER MANAGEMENT SYSTEM SHALL BE PERFORMED AS SPECIFIED IN BOOK 2 SECTION 12.
46. BMPS SHALL BE REMOVED AT THE END OF THE PROJECT AND UPON APPROVAL BY THE EROSION CONTROL SUPERVISOR.
47. THERE SHALL BE NO STOCKPILING OR SIDE CASTING OF WASTE MATERIALS INCLUDING BUT NOT LIMITED TO PAINT CHIPS, ASPHALT, OR CONCRETE ADJACENT TO ANY DRAINAGES (INCLUDING DRY DRAINAGES). PAINT MATERIAL REMOVED IN THE COURSE OF RESTRIPING SHALL BE PROPERLY CONTAINED AND DISPOSED OF TO PREVENT SUCH MATERIALS FROM ENTERING WATERS OF THE STATE.
48. IF SOIL OR GROUNDWATER CONTAMINATION IS ENCOUNTERED, WORK SHALL STOP IMMEDIATELY AND THE PROCEDURES OUTLINED IN CDOT SPECIFICATION 250 WILL BE FOLLOWED. WATER SHALL NOT BE DISCHARGED OR ALLOWED TO RUN OFF DIRECTLY INTO A STORM SEWER, DITCH, OR ANY WATERS OF THE STATE. IT SHALL BE CONTAINED IN DRUMS OR TANK(S) AND DISPOSED OF PROPERLY. IF UNCONTAMINATED WATER IS ENCOUNTERED, IT MAY BE DISCHARGED ONTO A GRASSY SWALE OR SPRAYED ONTO A VEGETATED AREA AND ALLOWED TO EVAPORATE. ANY DISCHARGE / EVAPORATION AREA SHALL BE APPROVED BY THE ENGINEER AND DONE IN ACCORDANCE WITH THE CDPHE GUIDANCE ON LOW RISK DISCHARGES.
49. WHENEVER TRENCHING OCCURS, THE TRENCH SHALL BE FILLED IN BY THE END OF THE DAY OR ELSE A BMP, SUCH AS AN EROSION LOG, SHALL BE PLACED ON THE DOWNSTREAM SIDE OF THE SPOILS TO PREVENT THE TRANSPORT OF THE SEDIMENT DURING A RAIN EVENT.

UTILITIES

50. UTILITY LINES AS SHOWN ON THE PLAN SHEETS ARE PLOTTED FROM THE BEST AVAILABLE INFORMATION. THE CONTRACTOR'S ATTENTION IS DIRECTED TO SUBSECTION 105.11 OF STANDARD SPECIFICATIONS CONCERNING UTILITIES.
51. THE CONTRACTOR SHALL COMPLY WITH ARTICLE 1.5 OF TITLE 9, CRS ("EXCAVATION REQUIREMENTS") WHEN EXCAVATING OR GRADING IS PLANNED IN THE AREA OF UNDERGROUND UTILITY FACILITIES. THE CONTRACTOR SHALL NOTIFY ALL AFFECTED UTILITIES AT LEAST TWO (2) BUSINESS DAYS, NOT INCLUDING THE ACTUAL DAY OF NOTICE, PRIOR TO COMMENCING SUCH OPERATIONS. THE CONTRACTOR SHALL CONTACT THE UTILITY NOTIFICATION CENTER OF COLORADO (UNCC) AT 811 OR 1-800-922-1987, TO HAVE LOCATIONS OF UNCC REGISTERED LINES MARKED BY MEMBER COMPANIES. ALL OTHER UNDERGROUND FACILITIES SHALL BE LOCATED BY CONTACTING THE RESPECTIVE OWNER. UTILITY SERVICE LATERALS SHALL ALSO BE LOCATED PRIOR TO BEGINNING EXCAVATION OR GRADING.
52. IT IS SUGGESTED THAT THE CONTRACTOR INITIATE A REQUEST TO XCEL ENERGY FOR ANY CONSTRUCTION RELATED TEMPORARY ELECTRICAL POWER SOURCES AS SOON AS POSSIBLE. THE REQUEST IS TO BE PROCESSED THROUGH XCEL ENERGY-BUILDER'S CALL LINE AT 1-800-628-2121.
53. THE CONTRACTOR SHALL POTHOLE POTENTIAL CONFLICTS WITH EXISTING BURIED ELECTRIC HIGHWAY LIGHTING FEEDS, AND THE PROPOSED CONSTRUCTION. IF A CONFLICT EXISTS, THE ENGINEER MAY MODIFY THE DESIGN AND LOCATION OF THE PROPOSED CONSTRUCTION TO AVOID THE EXISTING ELECTRIC LIGHTING FEED, RELOCATE THE EXISTING ELECTRIC LIGHTING FEED TO ACCOMMODATE PROPOSED CONSTRUCTION.

BLACK-TAILED PRAIRIE DOG (BTPD) COOT PASSIVE RELOCATION METHODOLOGY

54. THE CONTRACTOR SHALL FOLLOW THE BTPD RELOCATION METHOLOGY DEVELOPED BY SMITH ENVIRONMENTAL (DOCUMENT NOT INCLUDED IN PLAN SET).

UTILITY CONTACTS

Utility	Title	Contact	Phone Number (s)	Email
		Call before you dig	811	
Comcast	Engineer	Eric Carroll	303-603-5256 (direct),	eric_carroll@cable.comcast.com
Comcast	Locator	John Dugan	970-286-3518	johndugan@usicllc.com
Xcel Energy Gas	Engineer	Ron Johnson	303-571-3169	ron.h.johnson@xcelenergy.com
Xcel Energy Gas	Sitter	None	303-459-6537	adminlocate@sitewisecorp.com
Xcel Energy Gas	Locator	John Dugan	970-286-3518	johndugan@usicllc.com
Xcel Energy Electric	Engineer	Ron Johnson	303-571-3169	ron.h.johnson@xcelenergy.com
Xcel Energy Electric	Locator	John Dugan	970-286-3518	johndugan@usicllc.com
Xcel Energy Lighting &	Engineer	Ron Johnson	303-571-3169	ron.h.johnson@xcelenergy.com
Xcel Energy Lighting &	Locator	John Dugan	970-286-3518	johndugan@usicllc.com
Zayo	Engineer	Alex Abeyta (OSP Large Project	720-361-1790 (direct),	alex.abeyta@zayo.com
Zayo	Engineer	Andrew White (Project Manager)	303-632-0044 (direct),	andrew.white@zayo.com
Zayo (Stake Center)	Locator	Daniel	303-726-5204	N/A
Nustar Logistics		Harold	303-263-6527	
Nustar Logistics	Engineer	Donna Patrick	316-721-7073	donna.patrick@nustarenergy.com
Qwest Local Network	Engineer	Mark Iverson	303-458-2048	mark.iverson@centurylink.com
Qwest Local Network	Locator	John Dugan	970-286-3518	johndugan@usicllc.com
TW Telecom	Engineer	Guido Aguillard	303-566-6045	guido.aguillard@twtelecom.com
TW Telecom (Stake Center)	Locator	Daniel	303-726-5204	N/A
Denver Water		locates	303-628-6666	dwlocates@denverwater.org
Denver Water		Don Wyman	303-628-6628	don.wyman@denverwater.org
Denver Water	Locator	Steve Fanzen	303-507-5605	
Denver Parks & Rec		locates	720-865-0393 (automated)	parks.locators@denvergov.org
Denver Parks & Rec		Gene	303-349-7519	N/A
Denver Traffic Engineering Operations		locates	720-865-4001	pwtrafficengineering@denvergov.org
Wastewater Management Division		locates	303-446-3744	locators@denvergov.org

RFC02 JUNE, 2015 (REVIEW)

bob.harr 11:57:43 AM P:\13033540B - I-70 over Havana DB\19339\Design\Drawings\19339_GenNotes.dgn

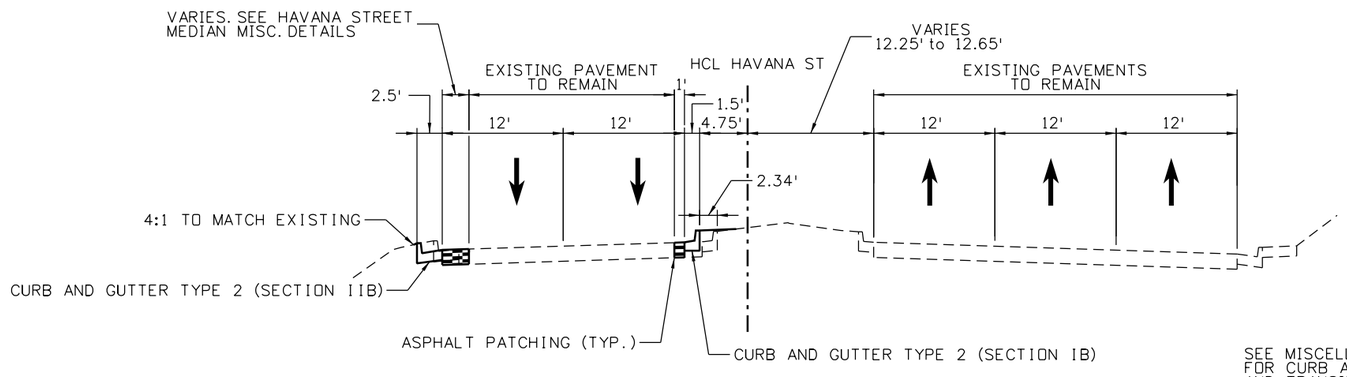

SEE MISCELLANEOUS DETAILS FOR CURB AND GUTTER LIMITS AND TRANSITION INFORMATION.

HAVANA STREET

410+40 TO 414+04

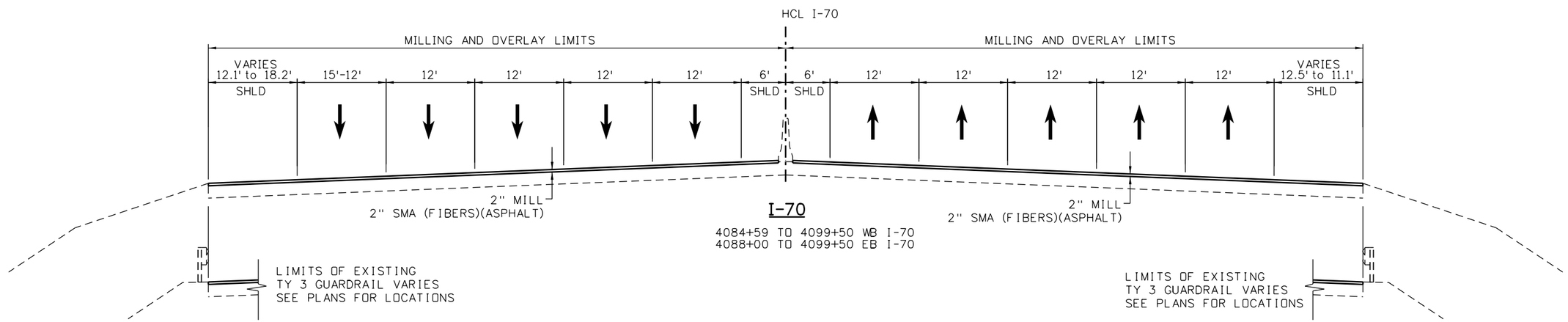

I-70

4084+59 TO 4099+50 WB I-70
4088+00 TO 4099+50 EB I-70

NOTES:
SEE PAVING PLANS FOR ADDITIONAL INFORMATION ON LIMITS OF 2" MILL AND OVERLAY.

RFC02 JUNE, 2015 (REVIEW)

bob.harr 11:57:47 AM P:\1303354DB - I-70 over Havana DB\19339\Design\Drawings\19339_TypSec.dgn

Print Date: 6/17/2015	Sheet Revisions	Colorado Department of Transportation	As Constructed
File Name: 19339_TypSec.dgn	Date: / Comments / Init.	4670 N. Holly, Denver, CO 80216, Phone: 303-398-6767 FAX: 303-398-6781	No Revisions:
Horiz. Scale: 1:15 Vert. Scale: As Noted		Region 1 KK	Revised:
LAWRENCE TSIOUVARAS SIMMONS HOLDERNESS CONSULTING ENGINEERS			Void:

I-70 OVER HAVANA STREET DESIGN-BUILD I-70 AND HAVANA ST TYPICAL SECTIONS			Project No./Code
Designer: R. HARR	Structure Numbers		FBR 0704-230
Detailer: R. HARR			19339
Sheet Subset: TYP	Subset Sheets: 1 of 7		Sheet Number 5

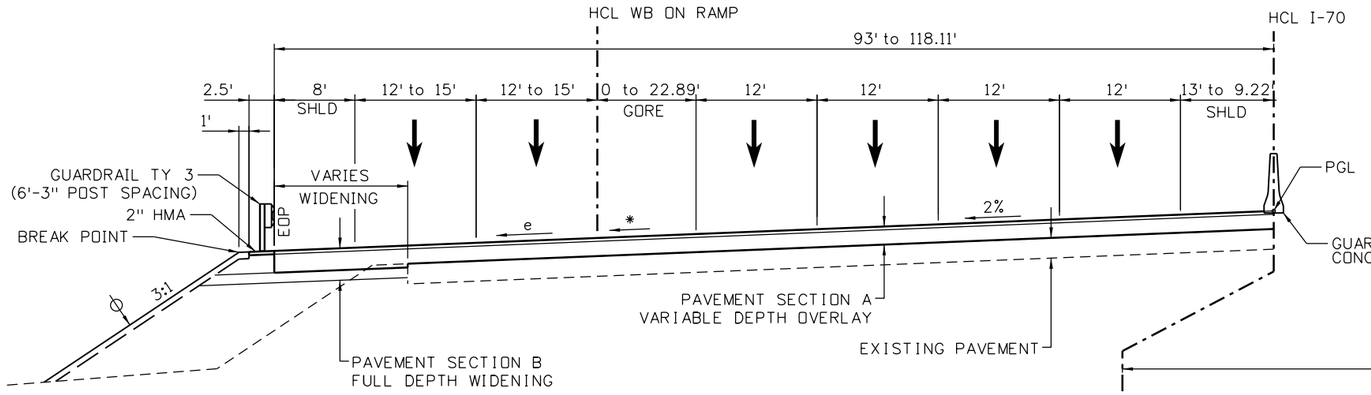

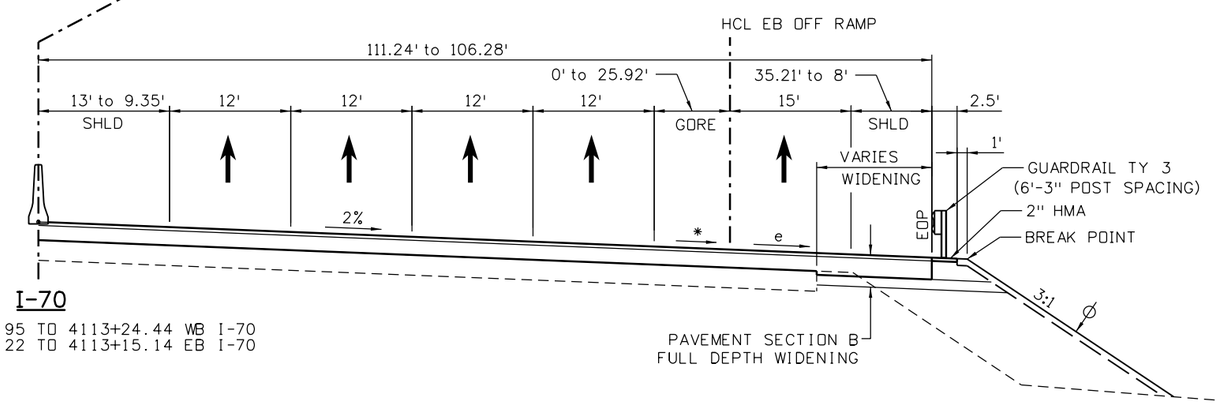

e = SEE ROADWAY PROFILES FOR e VALUES

* SEE GORE DETAILS

4" MINIMUM TOPSOIL

SEE CROSS SECTION FOR BREAKPOINT INFORMATION

I-70

4109+48.95 TO 4113+24.44 WB I-70
4109+53.22 TO 4113+15.14 EB I-70

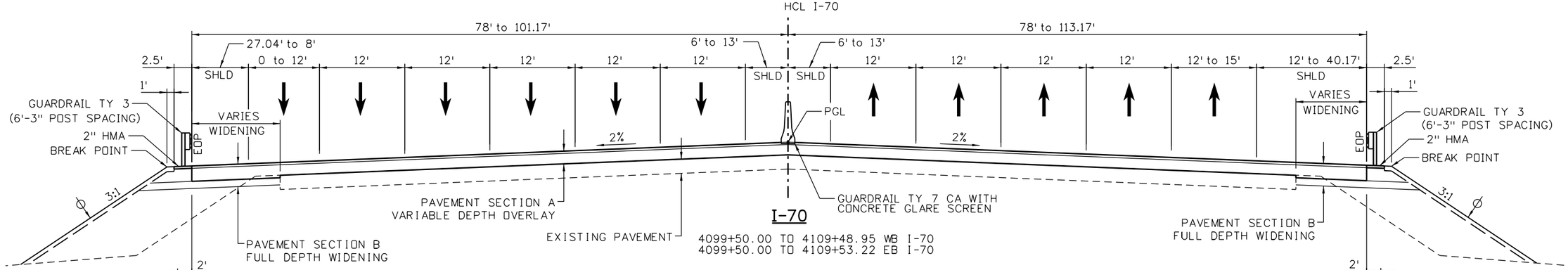

I-70

4099+50.00 TO 4109+48.95 WB I-70
4099+50.00 TO 4109+53.22 EB I-70

SEE BRIDGE PLANS FOR UPRR STRUCTURE FROM 4104+52.44 TO 4104+96.44
AND HAVANA STREET STRUCTURE FROM 4106+43.92 TO 4108+01.95

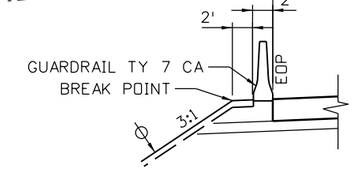

4105+04.22 TO 4106+01.73

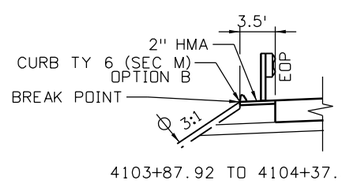

4103+87.92 TO 4104+37.37
SEE PLANS FOR TRANSITION
TO CURB AT FACE OF GUARDRAIL

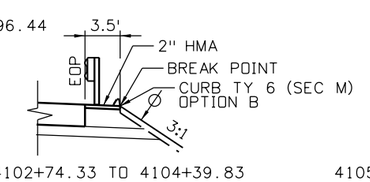

4102+74.33 TO 4104+39.83
SEE PLANS FOR TRANSITION
TO CURB AT FACE OF GUARDRAIL

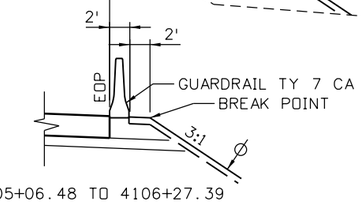

4105+06.48 TO 4106+27.39

RFC02 JUNE, 2015 (REVIEW)

bob.harr 11:57:51 AM P:\13033540B - I-70 over Havana DB\19339\Design\Drawings\19339_TypSec.dgn

Print Date: 6/17/2015	Sheet Revisions	Colorado Department of Transportation	As Constructed
File Name: 19339_TypSec.dgn	Date: / Comments / Init.	4670 N. Holly, Denver, CO 80216, Phone: 303-398-6767 FAX: 303-398-6781	No Revisions:
Horiz. Scale: 1:15 Vert. Scale: As Noted		Region 1 KK	Revised:
TSIOUVARAS SIMMONS HOLDERNESS CONSULTING ENGINEERS			Void:

I-70 OVER HAVANA STREET DESIGN-BUILD
I-70
TYPICAL SECTIONS

Designer:	R. HARR	Structure Numbers	
Detailer:	R. HARR		
Sheet Subset:	TYP	Subset Sheets:	2 of 7

Project No./Code: FBR 0704-230

19339

Sheet Number 6

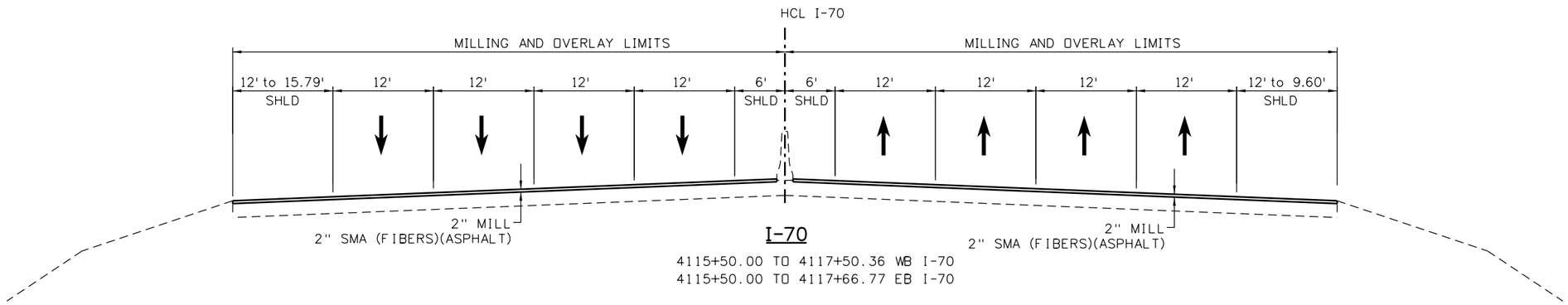

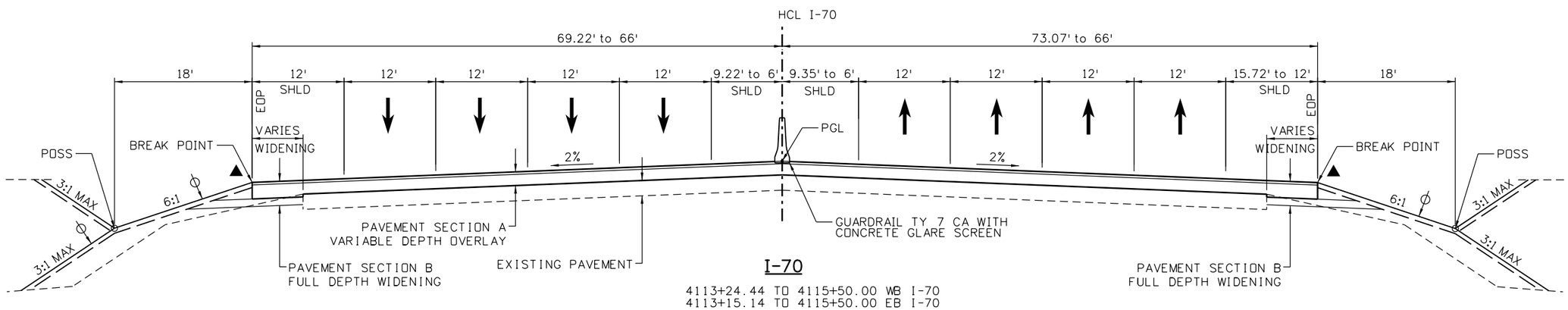

4" MINIMUM TOPSOIL

SAFETY EDGE

SEE CROSS SECTION FOR
BREAKPOINT INFORMATION

RFC02 JUNE, 2015 (REVIEW)

bob.harr 11:57:55 AM P:\13033540B - I-70 over Havana DB\19339\Design\Drawings\19339_TypSec.dgn

Print Date: 6/17/2015	Sheet Revisions	Colorado Department of Transportation	As Constructed
File Name: 19339_TypSec.dgn	Date: / Comments / Init.	4670 N. Holly, Denver, CO 80216, Phone: 303-398-6767 FAX: 303-398-6781	No Revisions:
Horiz. Scale: 1:15 Vert. Scale: As Noted		Region 1 KK	Revised:
LAWRENCE TSIOUVARAS SIMMONS HOLDERNESS CONSULTING ENGINEERS			Void:

I-70 OVER HAVANA STREET DESIGN-BUILD	Project No./Code		
I-70 TYPICAL SECTIONS	FBR 0704-230		
Designer: R. HARR	Structure Numbers	19339	
Detailer: R. HARR			
Sheet Subset: TYP	Subset Sheets: 3 of 7	Sheet Number	7

e = SEE ROADWAY PROFILES FOR e VALUES

SEE CROSS SECTION FOR BREAKPOINT INFORMATION

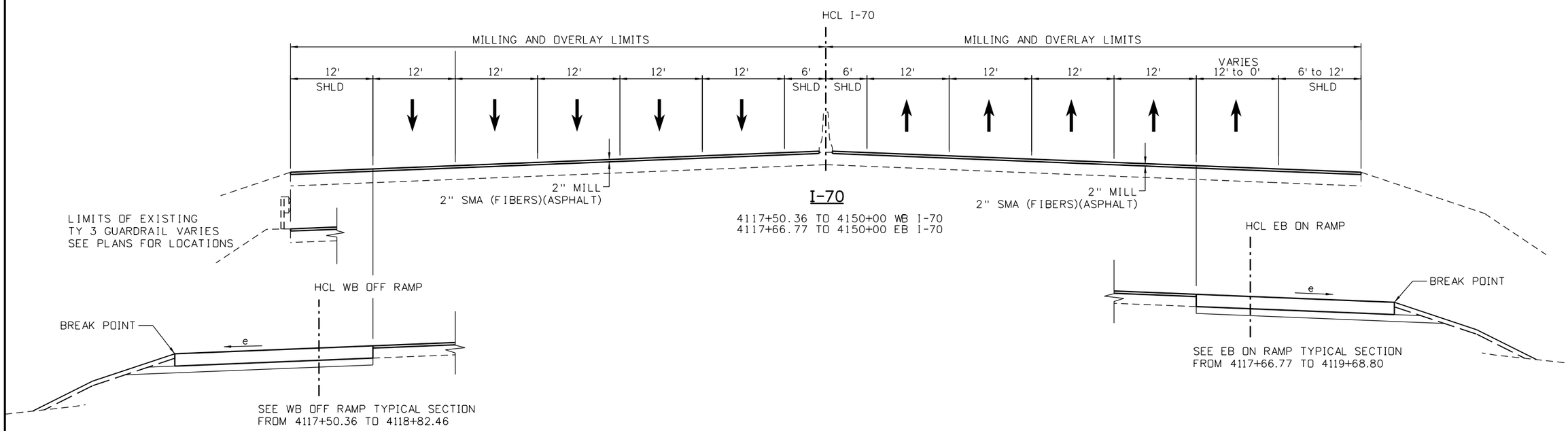

Print Date: 6/17/2015	Sheet Revisions	Colorado Department of Transportation	As Constructed
File Name: 19339_TypSec.dgn	Date: / Comments / Init.	4670 N. Holly, Denver, CO 80216, Phone: 303-398-6767 FAX: 303-398-6781	No Revisions:
Horiz. Scale: 1:15 Vert. Scale: As Noted		Region 1 KK	Revised:
TSIOUVARAS SIMMONS HOLDERNESS CONSULTING ENGINEERS			Void:

I-70 OVER HAVANA STREET DESIGN-BUILD I-70 TYPICAL SECTIONS			Project No./Code
Designer: R. HARR	Structure Numbers		FBR 0704-230
Detailer: R. HARR			19339
Sheet Subset: TYP	Subset Sheets: 4 of 7		Sheet Number 8

RFC02 JUNE, 2015 (REVIEW)

bob.harr 11:57:58 AM P:\13033540B - I-70 over Havana DB\19339\Design\Drawings\19339_TypSec.dgn

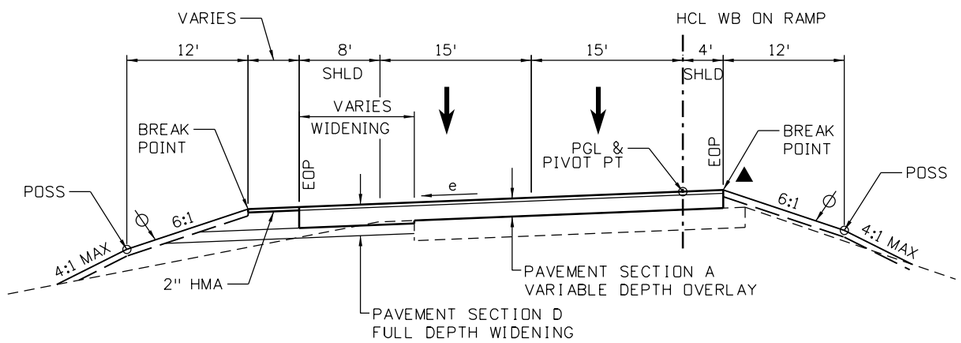

WB ON RAMP

23+75.12 TO 25+35.00

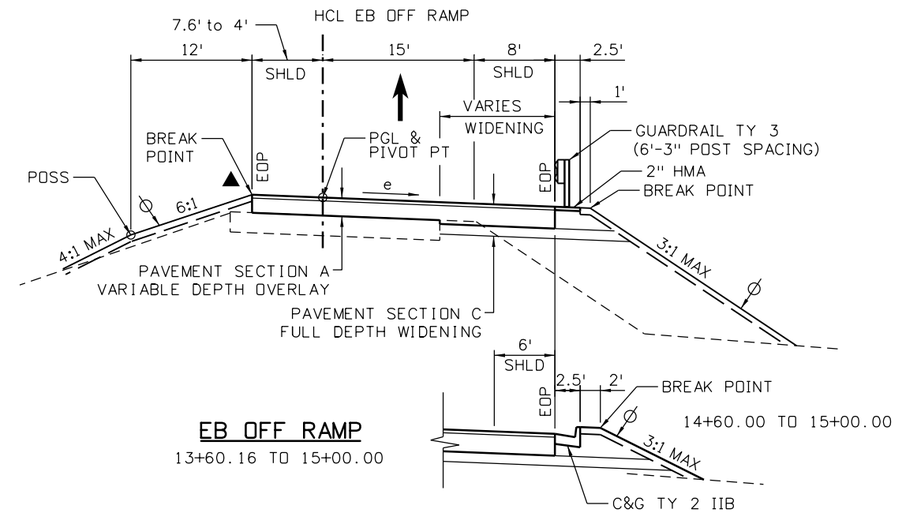

EB OFF RAMP

13+60.16 TO 15+00.00

e SEE ROADWAY PROFILES FOR e VALUE

* SEE GORE DETAILS

4" MINIMUM TOPSOIL

▲ SAFETY EDGE

SEE CROSS SECTION FOR BREAKPOINT INFORMATION

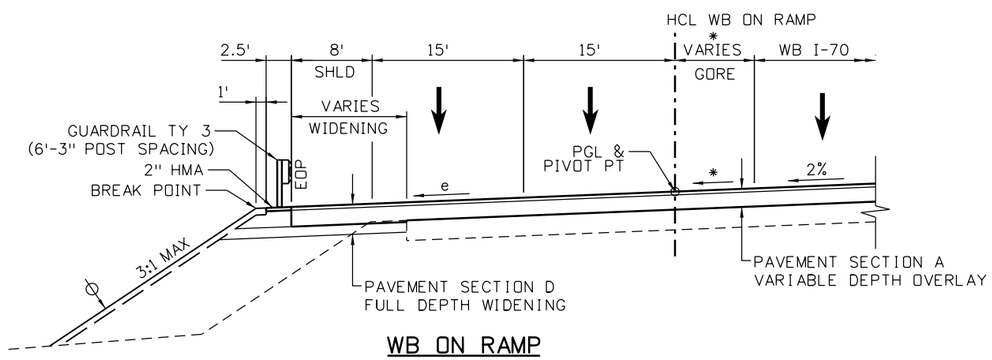

WB ON RAMP

22+99.92 TO 23+75.12

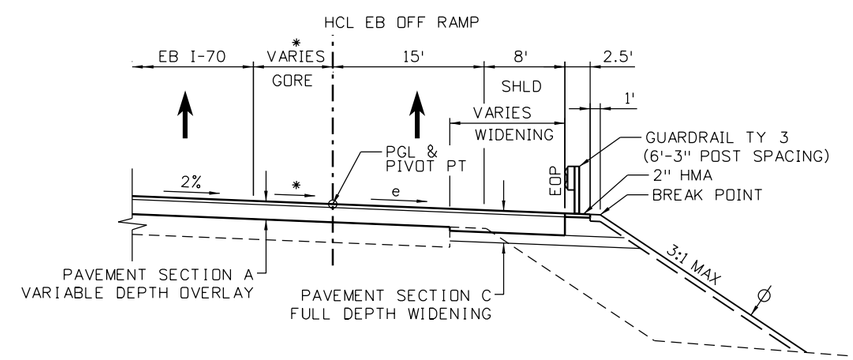

EB OFF RAMP

13+07.98 TO 13+60.16

RFC02 JUNE, 2015 (REVIEW)

bob.harr 11:58:02 AM P:\1303354DB - I-70 over Havana DB\19339\Design\Drawings\19339_TypSec.dgn

Print Date: 6/17/2015	Sheet Revisions	Colorado Department of Transportation	As Constructed	I-70 OVER HAVANA STREET DESIGN-BUILD RAMPS - RECONSTRUCTION AREAS TYPICAL SECTIONS	Project No./Code
File Name: 19339_TypSec.dgn	Date: / Comments / Init.	4670 N. Holly, Denver, CO 80216, Phone: 303-398-6767 FAX: 303-398-6781	No Revisions:		FBR 0704-230
Horiz. Scale: 1:15 Vert. Scale: As Noted		Region 1 KK	Revised:	Designer: R. HARR / Structure Numbers	19339
TSIOUVARAS SIMMONS HOLDERNESS CONSULTING ENGINEERS			Void:	Detailer: R. HARR / Sheet Subset: TYP / Subset Sheets: 5 of 7	Sheet Number 9

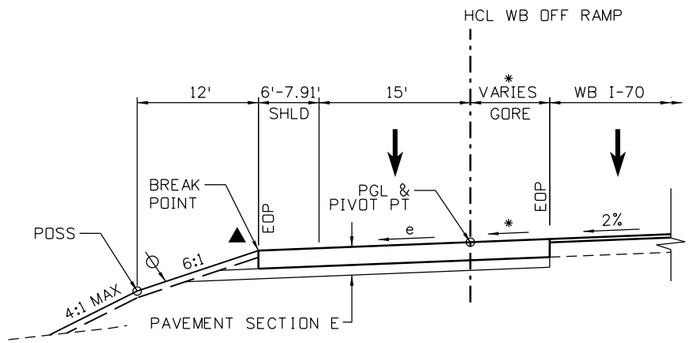

WB OFF RAMP

42+08.01 TO 43+40.00

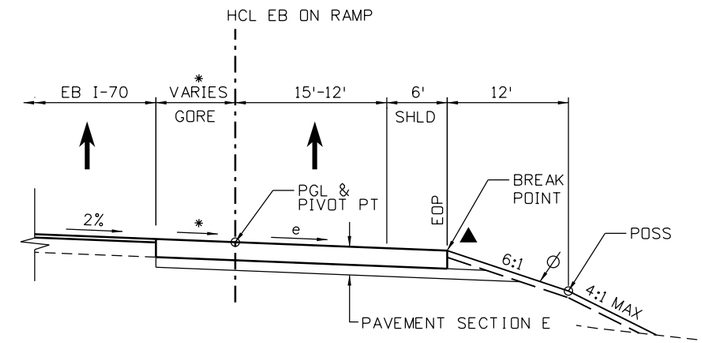

EB ON RAMP

32+97.90 TO 35+00.00

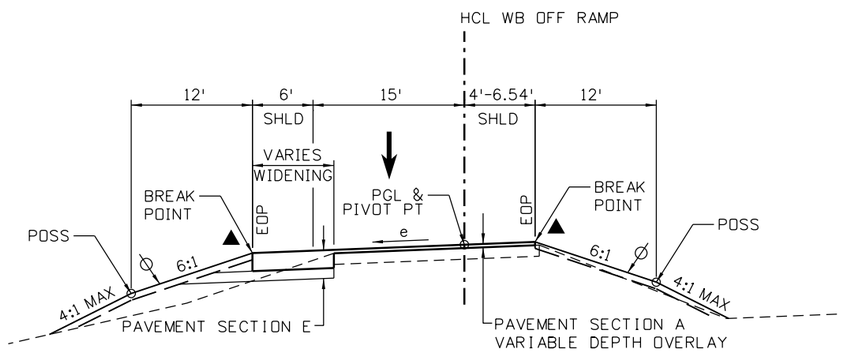

WB OFF RAMP

40+60.00 TO 42+08.01

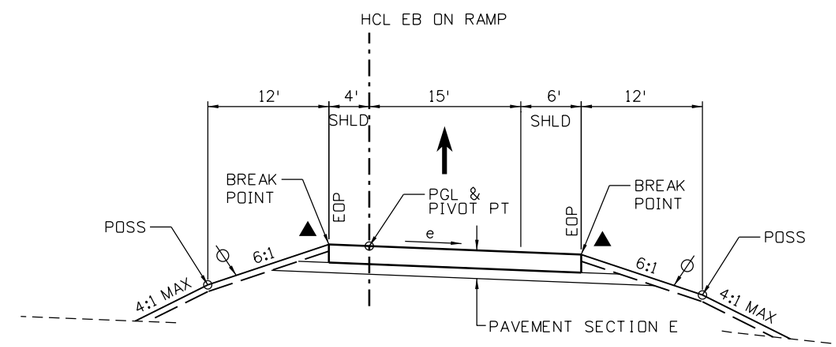

EB ON RAMP

30+60.00 TO 32+97.90

e SEE ROADWAY PROFILES FOR e VALUE

* SEE GORE DETAILS

4" MINIMUM TOPSOIL

▲ SAFETY EDGE

SEE CROSS SECTION FOR BREAKPOINT INFORMATION

Print Date: 6/17/2015	Sheet Revisions	Colorado Department of Transportation	As Constructed
File Name: 19339_TypSec.dgn	Date: / Comments / Init.	4670 N. Holly, Denver, CO 80216, Phone: 303-398-6767 FAX: 303-398-6781	No Revisions:
Horiz. Scale: 1:15 Vert. Scale: As Noted		Region 1 KK	Revised:
LAWRENCE TSIOUVARAS SIMMONS HOLDERNESS CONSULTING ENGINEERS			Void:

I-70 OVER HAVANA STREET DESIGN-BUILD RAMPS - RECONSTRUCTION AREAS TYPICAL SECTIONS

Designer: R. HARR | Structure Numbers
Detailer: R. HARR
Sheet Subset: TYP | Subset Sheets: 6 of 7

Project No./Code: FBR 0704-230
19339
Sheet Number 10

RFC02 JUNE, 2015 (REVIEW)

bob.harr 11:58:05 AM P:\1303354DB - I-70 over Havana DB\19339\Design\Drawings\19339_TypSec.dgn

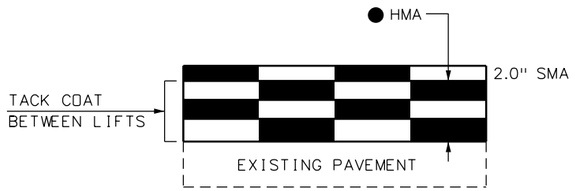

PAVEMENT DETAIL A

● VARIABLE DEPTH OVERLAY. NUMBER OF LIFTS VARIES. LIFT DEPTH SHALL BE IN ACCORDANCE WITH THE PAVEMENT DESIGN REPORT FOR THIS PROJECT.

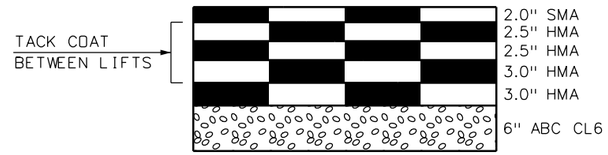

PAVEMENT DETAIL B

13" FULL DEPTH AREAS I-70

MINIMUM SUBGRADE R VALUE=20, 24" DEPTH

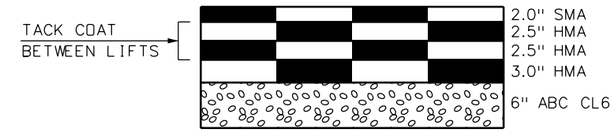

PAVEMENT DETAIL C

10" FULL DEPTH AREAS EB OFF RAMP

MINIMUM SUBGRADE R VALUE=20, 24" DEPTH

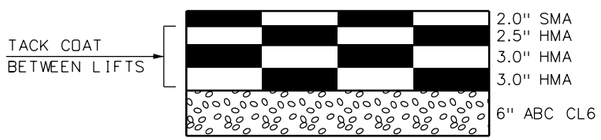

PAVEMENT DETAIL D

10.5" FULL DEPTH AREAS WB ON RAMP

MINIMUM SUBGRADE R VALUE=20, 24" DEPTH

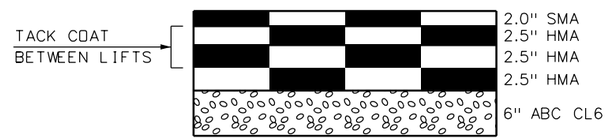

PAVEMENT DETAIL E

9.5" FULL DEPTH AREAS EB ON AND WB OFF RAMPS

MINIMUM SUBGRADE R VALUE=20, 24" DEPTH

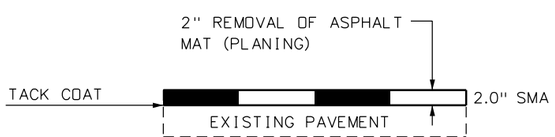

MILL AND OVERLAY DETAIL

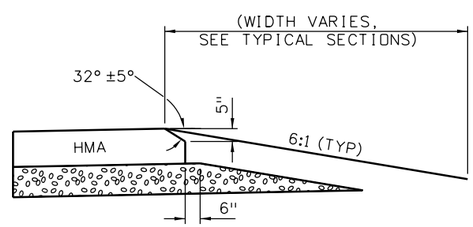

PAVEMENT SAFETY EDGE DETAIL

NOTES:
SMA = STONE MATRIX ASPHALT (FIBERS) (ASPHALT)
HMA = HOT MIX ASPHALT (GR. S) (100) (PG 64-22)

RFC02 JUNE, 2015 (REVIEW)

bob.harr 11:58:09 AM P:\13033540B - I-70 over Havana DB\19339\Design\Drawings\19339_TypSec.dgn

Print Date: 6/17/2015	Sheet Revisions	Colorado Department of Transportation	As Constructed
File Name: 19339_TypSec.dgn	Date: / Comments / Init.	4670 N. Holly, Denver, CO 80216, Phone: 303-398-6767 FAX: 303-398-6781	No Revisions:
Horiz. Scale: 1:15 Vert. Scale: As Noted		Region 1 KK	Revised:
LAWRENCE TSIOUVARAS SIMMONS HOLDERNESS CONSULTING ENGINEERS			Void:

I-70 OVER HAVANA STREET DESIGN-BUILD PAVEMENT DETAILS TYPICAL SECTIONS			Project No./Code
Designer: R. HARR	Structure Numbers		FBR 0704-230
Detailer: R. HARR			19339
Sheet Subset: TYP	Subset Sheets: 7 of 7		Sheet Number 11

TABUALATION OF ROADWAY QUANTITIES

Item No.	Description	Unit	Quantity
202-00240	Removal of Asphalt Mat (Planing)	SY	186592
203-00060	Embankment Material (Complete In Place)	CY	31143
304-06000	Aggregate Base Course (Class 6)	TON	3762
403-00720	Hot Mix Asphalt (Patching) (Asphalt)	TON	64
403-09221	Stone Matrix Asphalt (Fibers) (Asphalt)	TON	22115
403-33841	Hot Mix Asphalt (Grading S) (100) (PG 64-22)	TON	12364
412-01250	Concrete Pavement (12-1/2 Inch)	SY	1493
606-00301	Guardrail Type 3 (6-3 Post Spacing)	LF	1887
606-00710	Guardrail Type 7 (Style CA)	LF	219
606-00715	Guardrail Type 7 (Style CA) (Concrete Glare Screen)	LF	1861
609-21010	Curb and Gutter Type 2 (Section I-B)	LF	334
609-21020	Curb and Gutter Type 2 (Section II-B)	LF	345

THESE QUANTITIES REFLECT WORK IN ALL RFC PACKAGES COMBINED

RFC02 JUNE, 2015 (REVIEW)

bob.harr 11:58:13 AM P:\13033540B - I-70 over Havana DB\19339\Design\Drawings\19339_QTY.dgn

Print Date: 6/17/2015
File Name: 19339_QTY.dgn
Horiz. Scale: 1:100 Vert. Scale: As Noted

LAWRENCE
TSIOUVARAS SIMMONS HOLDERNESS
CONSULTING ENGINEERS

Sheet Revisions		
Date:	Comments	Init.

Colorado Department of Transportation
4670 N. Holly
Denver, CO 80216
Phone: 303-398-6767 FAX: 303-398-6781
Region 1 KK

As Constructed
No Revisions:
Revised:
Void:

I-70 OVER HAVANA STREET DESIGN-BUILD
ROADWAY QUANTITY TABULATION

Designer: R. HARR
Detailer: A. MELNIC
Structure Numbers
Sheet Subset:
Subset Sheets: 1 of 1

Project No./Code
FBR 0704-230
19339
Sheet Number 12

WB On Ramp Horizontal Elements Table Report

Element	Point Type	Station	Northing	Easting	Radius	Length	Delta / Theta	Rotation Direction	e	MDS
Tangent	POB	20+00.00	454527.92	679417.11						
Arc R2-1	PC	22+99.92	454495.09	679715.23						
Arc R2-1	PI	23+98.07	454484.35	679812.79	159.00	175.87	63° 22'24"	Left	6.00%	25mph
Arc R2-1/R2-2	PCC	24+75.79	454566.75	679866.11						
Arc R2-2	PI	27+33.80	454783.35	680006.30	178.00	344.21	110° 47'48"	Left	existing	25mph
Arc R2-2	PT	28+20.00	454837.50	679754.03						
Tangent	POE	28+60.00	454845.89	679714.92						

Havana Street Horizontal Elements Table Report

Element	Point Type	Station	Northing	Easting	Radius	Length	Delta / Theta	Rotation Direction	e	MDS
Tangent	POB	400+00.00	453280.55	679212.66						
Arc H-1	PC	403+33.31	453613.85	679209.51						
Arc H-1	PI	403+99.98	453680.51	679208.88	10000.00	133.33	0° 45'50"	Left	NC	>45mph
Arc H-1	PT	404+66.64	453747.16	679207.36						
Arc H-2	PC	406+33.34	453913.81	679203.56						
Arc H-2	PI	407+00.00	453980.46	679202.04	10000.00	133.33	0° 45'50"	Right	NC	>45mph
Arc H-2	PT	407+66.66	454047.12	679201.41						
Arc H-3	PC	416+07.28	454887.70	679193.45						
Arc H-3	PI	417+06.25	454986.67	679192.51	5000.00	197.91	2° 16'04"	Right	NC	>45mph
Arc H-3	PT	418+05.19	455085.59	679195.49						
Arc H-4	PC	421+14.23	455394.48	679204.80						
Arc H-4	PI	422+00.92	455481.14	679207.41	5000.00	173.37	1° 59'12"	Left	NC	>45mph
Arc H-4	PT	422+87.60	455567.84	679207.02						
Tangent	POE	423+94.33	455674.56	679206.53						

KEY POINTS

A	4104+74.44, ℄ I-70 = 109+87.36, ℄ UPRR (FUTURE)
B	4107+34.44, ℄ I-70 = 412+10.33, ℄ HAVANA ST
C	4109+48.95, 61.00' LT I-70 = 20+00.00, ℄ WB ON RAMP
D	4109+53.22, 61.00' RT I-70 = 10+00.00, ℄ EB OFF RAMP
E	4119+42.50, 54.00' LT I-70 = 44+00.00, ℄ WB OFF RAMP
F	4120+68.80, 54.00' RT I-70 = 36+00.00, ℄ EB ON RAMP

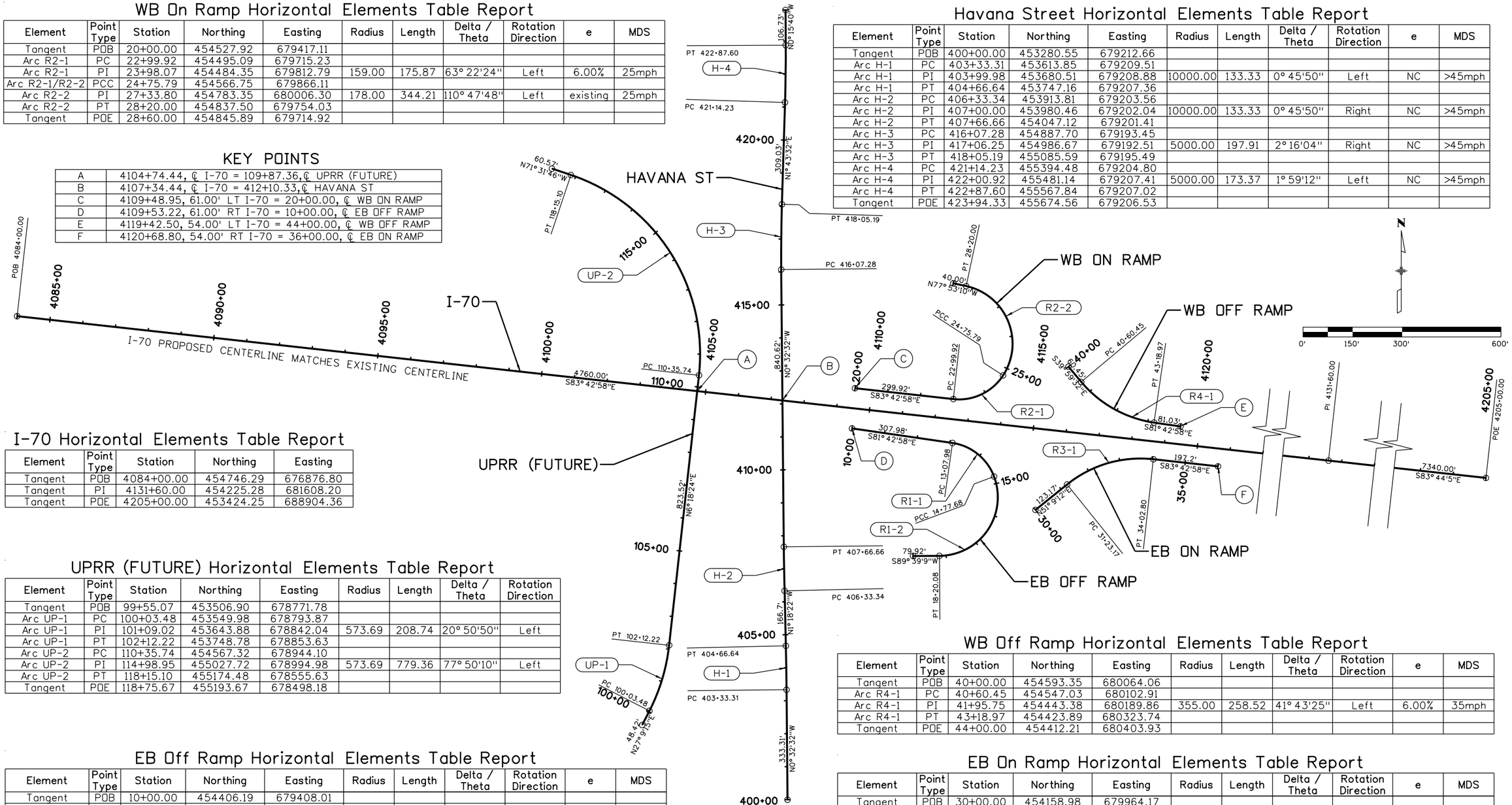

I-70 Horizontal Elements Table Report

Element	Point Type	Station	Northing	Easting
Tangent	POB	4084+00.00	454746.29	676876.80
Tangent	PI	4131+60.00	454225.28	681608.20
Tangent	POE	4205+00.00	453424.25	688904.36

UPRR (FUTURE) Horizontal Elements Table Report

Element	Point Type	Station	Northing	Easting	Radius	Length	Delta / Theta	Rotation Direction
Tangent	POB	99+55.07	453506.90	678771.78				
Arc UP-1	PC	100+03.48	453549.98	678793.87				
Arc UP-1	PI	101+09.02	453643.88	678842.04	573.69	208.74	20° 50'50"	Left
Arc UP-1	PT	102+12.22	453748.78	678853.63				
Arc UP-2	PC	110+35.74	454567.32	678944.10				
Arc UP-2	PI	114+98.95	455027.72	678994.98	573.69	779.36	77° 50'10"	Left
Arc UP-2	PT	118+15.10	455174.48	678555.63				
Tangent	POE	118+75.67	455193.67	678498.18				

WB Off Ramp Horizontal Elements Table Report

Element	Point Type	Station	Northing	Easting	Radius	Length	Delta / Theta	Rotation Direction	e	MDS
Tangent	POB	40+00.00	454593.35	680064.06						
Arc R4-1	PC	40+60.45	454547.03	680102.91						
Arc R4-1	PI	41+95.75	454443.38	680189.86	355.00	258.52	41° 43'25"	Left	6.00%	35mph
Arc R4-1	PT	43+18.97	454423.89	680323.74						
Tangent	POE	44+00.00	454412.21	680403.93						

EB Off Ramp Horizontal Elements Table Report

Element	Point Type	Station	Northing	Easting	Radius	Length	Delta / Theta	Rotation Direction	e	MDS
Tangent	POB	10+00.00	454406.19	679408.01						
Arc R1-1	PC	13+07.98	454361.81	679712.77						
Arc R1-1	PI	14+01.92	454348.28	679805.74	159.00	169.71	61° 09'16"	Right	6.00%	25mph
Arc R1-1/R1-2	PCC	14+77.68	454260.32	679838.73						
Arc R1-2	PI	17+32.91	454021.35	679928.37	178.00	342.40	110° 12'50"	Right	existing	25mph
Arc R1-2	PT	18+20.08	454019.80	679673.15						
Tangent	POE	19+00.00	454019.32	679593.24						

EB On Ramp Horizontal Elements Table Report

Element	Point Type	Station	Northing	Easting	Radius	Length	Delta / Theta	Rotation Direction	e	MDS
Tangent	POB	30+00.00	454158.98	679964.17						
Arc R3-1	PC	31+23.17	454236.24	680060.10						
Arc R3-1	PI	32+70.69	454328.77	680174.99	355.00	279.63	45° 07'51"	Right	6.00%	35mph
Arc R3-1	PT	34+02.80	454312.62	680321.63						
Tangent	POE	36+00.00	454291.04	680517.65						

Print Date: 6/17/2015
File Name: 19339_Geometry.dgn
Horiz. Scale: 1:300 Vert. Scale: As Noted

LAWRENCE
TSIOUVARAS SIMMONS HOLDERNESS
CONSULTING ENGINEERS

Sheet Revisions		
Date:	Comments	Init.

Colorado Department of Transportation
CDOT
4670 N. Holly
Denver, CO 80216
Phone: 303-398-6767 FAX: 303-398-6781
Region 1 KK

As Constructed
No Revisions:
Revised:
Void:

I-70 OVER HAVANA STREET DESIGN-BUILD
GEOMETRY PLAN
Designer: R. HARR
Detailer: R. HARR
Structure Numbers
Sheet Subset: GEOM
Subset Sheets: 1 of 1

Project No./Code
FBR 0704-230
19339
Sheet Number 13

RFC02 JUNE, 2015 (REVIEW)

bob.harr 11:58:17 AM P:\30335408 - I-70 over Havana DB\19339\Design\Drawings\19339_Geometry.dgn

Wall A Horizontal Elements Table Report

Element	Point Type	Station	Northing	Easting	Radius	Length	Delta / Theta	Rotation Direction
Tangent	POB	9+50.00	454308.52	678830.74				
Tangent	PI	10+74.81	454407.37	678906.93				
Arc WA 1	PC	12+37.87	454569.45	678924.84				
Arc WA 1	PI	12+65.07	454596.48	678927.83	554.32	54.36	5° 37'07"	Left
Arc WA 1	PT	12+92.23	454623.68	678928.15				
Tangent	POE	14+40.22	454766.55	678889.53				

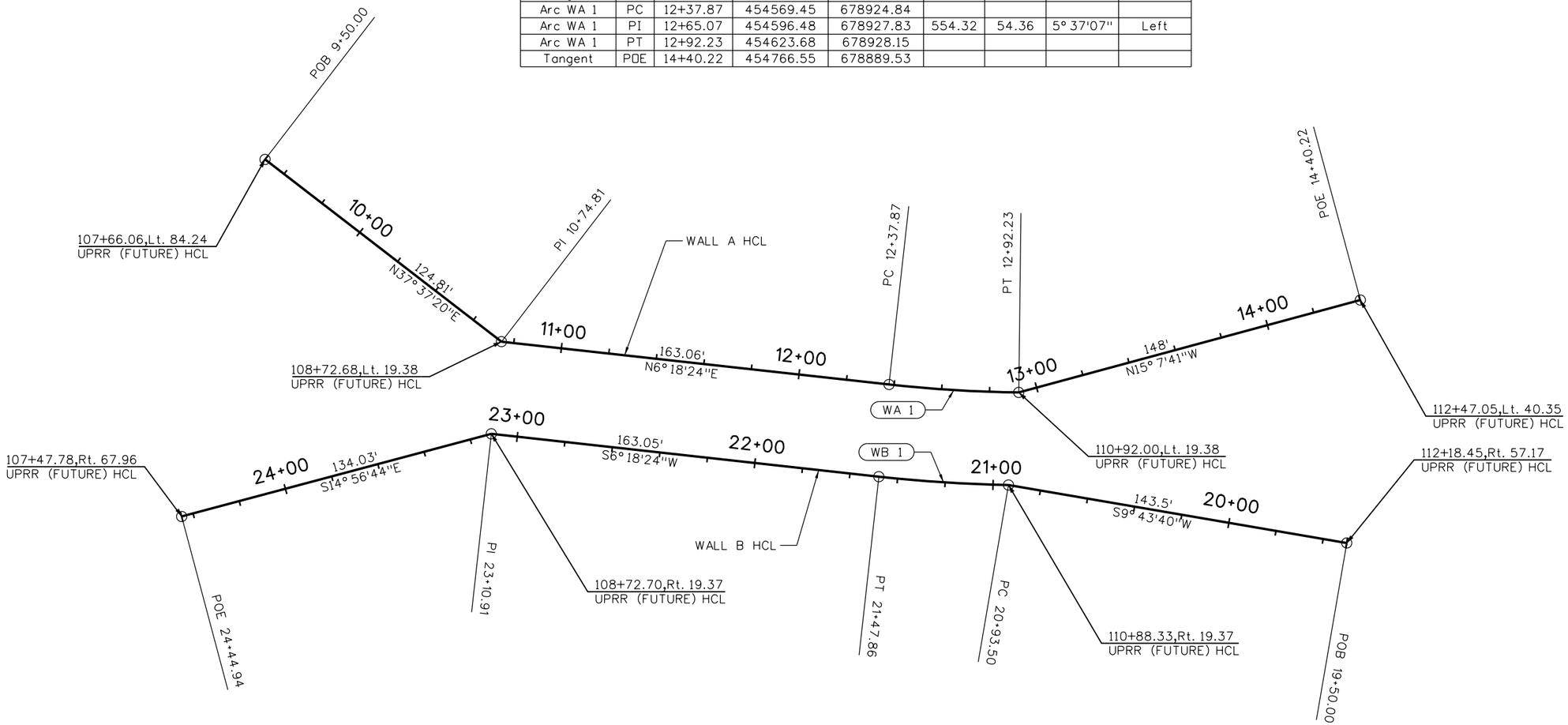

Wall B Horizontal Elements Table Report

Element	Point Type	Station	Northing	Easting	Radius	Length	Delta / Theta	Rotation Direction
Tangent	POB	19+50.00	454760.86	678991.09				
Arc WB 1	PC	20+93.50	454619.42	678966.84				
Arc WB 1	PI	21+20.70	454592.23	678966.34	593.07	54.36	5° 15'07"	Right
Arc WB 1	PT	21+47.86	454565.19	678963.35				
Tangent	PI	23+10.91	454403.13	678945.44				
Tangent	POE	24+44.94	454273.64	678980.01				

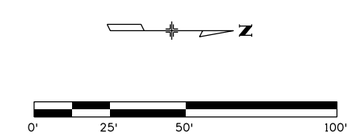

RFC02 JUNE, 2015 (REVIEW)

bob.harr 11:58:22 AM P:\13033540B - I-70 over Havana DB\19339\Design\Drawings\19339_WallGeom.dgn

Print Date: 6/17/2015
File Name: 19339_WallGeom.dgn
Horiz. Scale: 1:50 Vert. Scale: As Noted

LAWRENCE
TSIOUVARAS SIMMONS HOLDERNESS
CONSULTING ENGINEERS

Sheet Revisions		
Date:	Comments	Init.

Colorado Department of Transportation
CDOT
4670 N. Holly
Denver, CO 80216
Phone: 303-398-6767 FAX: 303-398-6781
Region 1 KK

As Constructed
No Revisions:
Revised:
Void:

I-70 OVER HAVANA STREET DESIGN-BUILD
RAILROAD WALLS
WALL GEOMETRY PLAN

Designer: R. HARR
Detailer: R. HARR
Sheet Subset: GEOM
Structure Numbers
Subset Sheets: 1 of 2

Project No./Code
FBR 0704-230
19339
Sheet Number 14

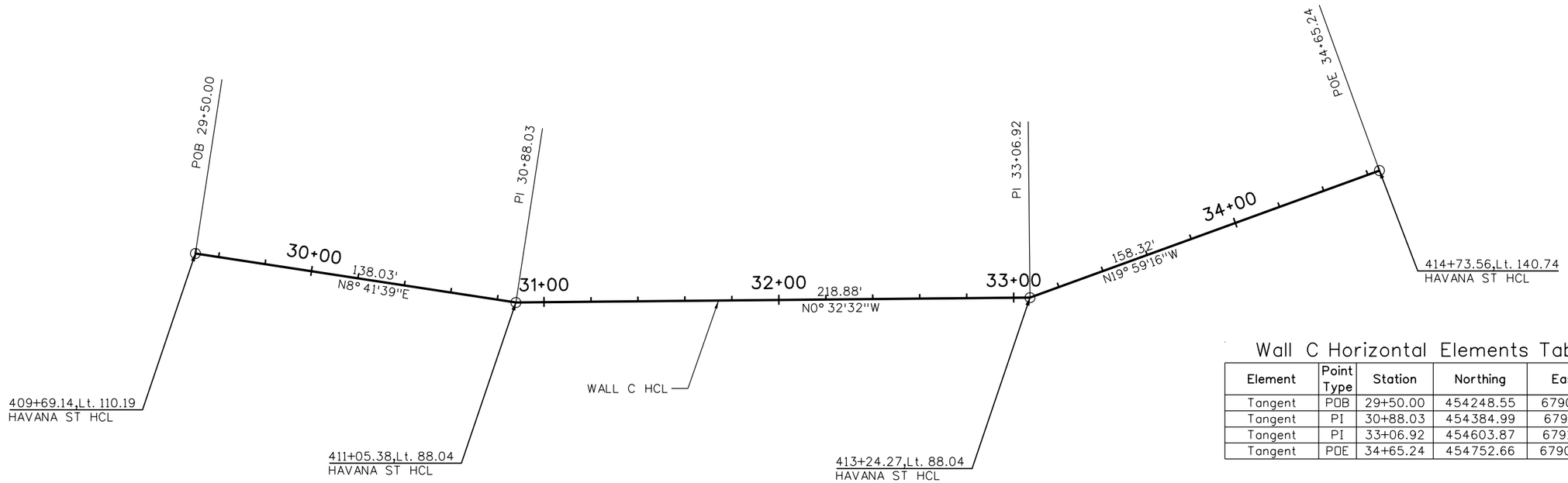

Wall C Horizontal Elements Table

Element	Point Type	Station	Northing	Easting
Tangent	POB	29+50.00	454248.55	679089.31
Tangent	PI	30+88.03	454384.99	679110.17
Tangent	PI	33+06.92	454603.87	679108.10
Tangent	POE	34+65.24	454752.66	679053.98

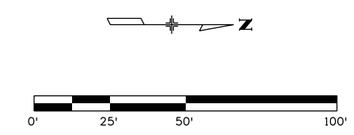

RFC02 JUNE, 2015 (REVIEW)

bob.harr 11:58:25 AM P:\13033540B - I-70 over Havana DB\19339\Design\Drawings\19339_WallGeom.dgn

Print Date: 6/17/2015
File Name: 19339_WallGeom.dgn
Horiz. Scale: 1:50 Vert. Scale: As Noted

LAWRENCE
TSIOUVARAS SIMMONS HOLDERNESS
CONSULTING ENGINEERS

Sheet Revisions		
Date:	Comments	Init.

Colorado Department of Transportation
4670 N. Holly
Denver, CO 80216
Phone: 303-398-6767 FAX: 303-398-6781
Region 1 KK

As Constructed
No Revisions:
Revised:
Void:

I-70 OVER HAVANA STREET DESIGN-BUILD
HAVANA WALLS
WALL GEOMETRY PLAN

Designer: R. HARR
Detailer: A. MELNIC
Sheet Subset: GEOM
Structure Numbers
Subset Sheets: 2 of 2

Project No./Code
FBR 0704-230
19339
Sheet Number 15

NOTES:

SEE UTILITY, LIGHTING, STRUCTURE, LANDSCAPE INVENTORY AND SIGNING & STRIPING PLANS FOR ADDITIONAL REMOVAL/RESET INFORMATION.

SEE PAVING PLANS FOR LIMITS OF REMOVAL ASPHALT MAT (PLANING) ON I-70.

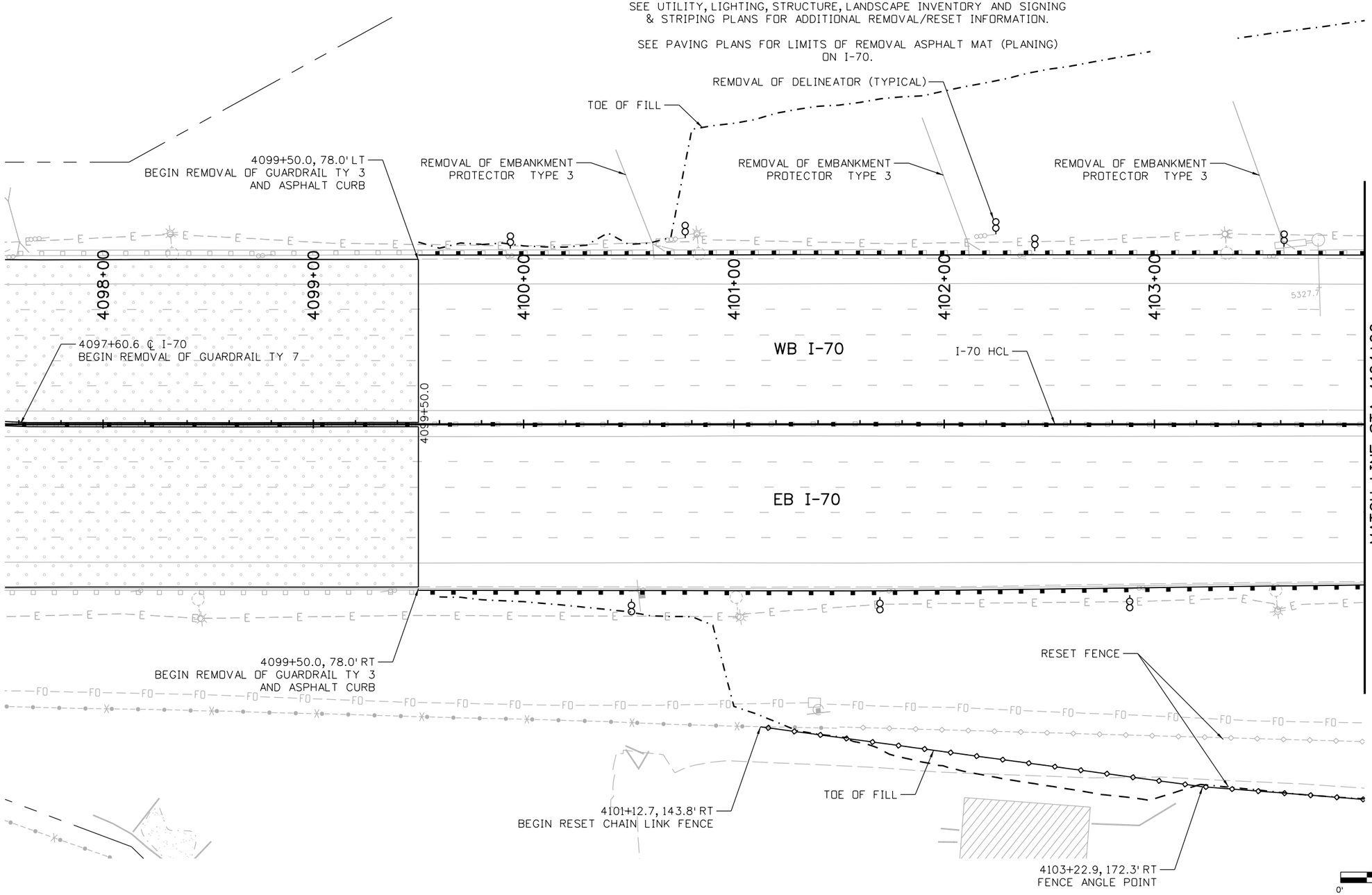

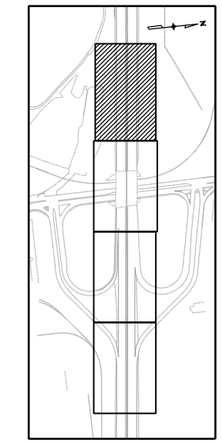

KEYMAP

LEGEND

- REMOVAL OF ASPHALT MAT
- REMOVAL OF ASPHALT MAT (PLANING)

Know what's below. Call before you dig.

RFC02 JUNE, 2015 (REVIEW)

bob.harr 11:58:31 AM P:\130335408 - I-70 over Havana DB\19339\Design\Drawings\19339_RemReset.dgn

Print Date: 6/17/2015	Sheet Revisions	Colorado Department of Transportation	As Constructed
File Name: 19339_RemReset.dgn	Date: / Comments / Init.	4670 N. Holly, Denver, CO 80216, Phone: 303-398-6767 FAX: 303-398-6781	No Revisions:
Horiz. Scale: 1:50 Vert. Scale: As Noted		Region 1 KK	Revised:
LAWRENCE / TSIOUVARAS SIMMONS HOLDERNESS CONSULTING ENGINEERS			Void:

I-70 OVER HAVANA STREET DESIGN-BUILD			
REMOVAL AND RESET PLAN			
Designer: R. HARR	Structure Numbers		
Detailer: R. HARR			
Sheet Subset: REM	Subset Sheets: 1 of 4		

Project No./Code
FBR 0704-230
19339
Sheet Number 16

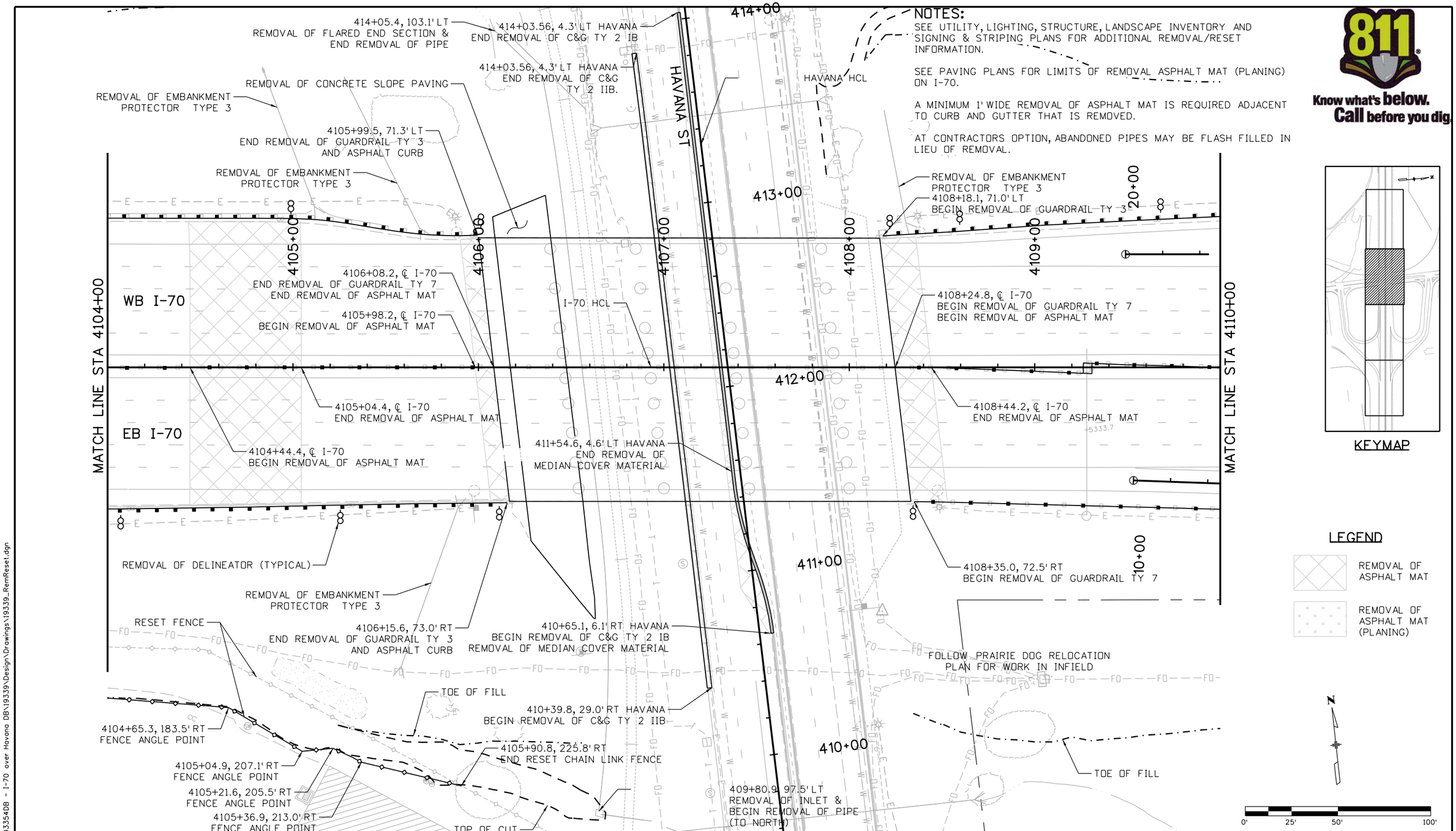

NOTES:

SEE UTILITY, LIGHTING, STRUCTURE, LANDSCAPE INVENTORY AND SIGNING & STRIPING PLANS FOR ADDITIONAL REMOVAL/RESET INFORMATION.

SEE PAVING PLANS FOR LIMITS OF REMOVAL ASPHALT MAT (PLANING) ON I-70.

A MINIMUM 1' WIDE REMOVAL OF ASPHALT MAT IS REQUIRED ADJACENT TO CURB AND GUTTER THAT IS REMOVED.

AT CONTRACTORS OPTION, ABANDONED PIPES MAY BE FLASH FILLED IN LIEU OF REMOVAL.

Know what's below. Call before you dig.

KEYMAP

LEGEND

- REMOVAL OF ASPHALT MAT
- REMOVAL OF ASPHALT MAT (PLANING)

RFC02 JUNE, 2015 (REVIEW)

bob.harr 11:58:36 AM P:\13033540B - I-70 over Havana DB\19339\Design\Drawings\19339_RemReset.dgn

Print Date: 6/17/2015	Sheet Revisions	Colorado Department of Transportation	As Constructed
File Name: 19339_RemReset.dgn	Date: / Comments / Init.	4670 N. Holly, Denver, CO 80216, Phone: 303-398-6767 FAX: 303-398-6781	No Revisions:
Horiz. Scale: 1:50 Vert. Scale: As Noted		Region 1 KK	Revised:
TSIOUVARAS SIMMONS HOLDERNESS CONSULTING ENGINEERS			Void:

I-70 OVER HAVANA STREET DESIGN-BUILD

REMOVAL AND RESET PLAN

Designer:	R. HARR	Structure Numbers	
Detailer:	R. HARR		
Sheet Subset:	REM	Subset Sheets:	2 of 4

Project No./Code

FBR 0704-230

19339

Sheet Number 17

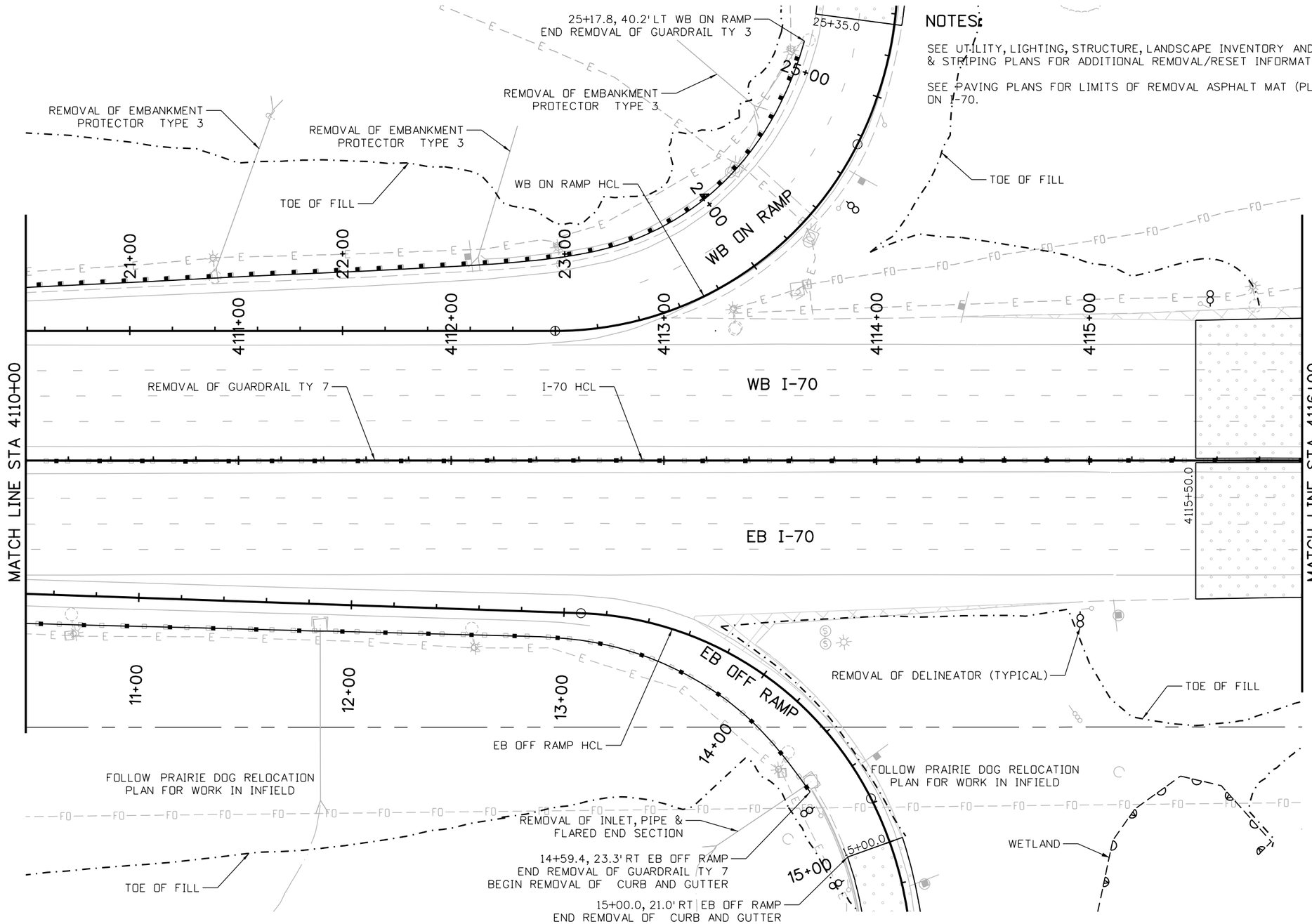

NOTES:

SEE UTILITY, LIGHTING, STRUCTURE, LANDSCAPE INVENTORY AND SIGNING & STRIPING PLANS FOR ADDITIONAL REMOVAL/RESET INFORMATION.

SEE PAVING PLANS FOR LIMITS OF REMOVAL ASPHALT MAT (PLANING) ON I-70.

Know what's below. Call before you dig.

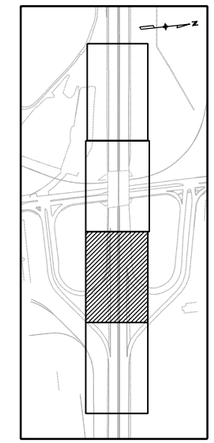

KEYMAP

RFC02 JUNE, 2015 (REVIEW)

LEGEND

REMOVAL OF ASPHALT MAT

REMOVAL OF ASPHALT MAT (PLANING)

bob.harr 11:58:41 AM P:\130335408 - I-70 over Havana DB\19339\Design\Drawings\19339_RemReset.dgn

Print Date: 6/17/2015	Sheet Revisions	Colorado Department of Transportation	As Constructed
File Name: 19339_RemReset.dgn	Date: / Comments / Init.	4670 N. Holly, Denver, CO 80216, Phone: 303-398-6767 FAX: 303-398-6781	No Revisions:
Horiz. Scale: 1:50 Vert. Scale: As Noted		Region 1 KK	Revised:
TSIOUVARAS SIMMONS HOLDERNESS CONSULTING ENGINEERS			Void:

I-70 OVER HAVANA STREET DESIGN-BUILD			
REMOVAL AND RESET PLAN			
Designer: R. HARR	Structure Numbers		
Detailer: R. HARR			
Sheet Subset: REM	Subset Sheets: 3 of 4		

Project No./Code
FBR 0704-230
19339
Sheet Number 18

NOTES:

SEE UTILITY, LIGHTING, STRUCTURE, LANDSCAPE INVENTORY AND SIGNING & STRIPING PLANS FOR ADDITIONAL REMOVAL/RESET INFORMATION.

SEE PAVING PLANS FOR LIMITS OF REMOVAL ASPHALT MAT (PLANING) ON I-70.

Know what's below. Call before you dig.

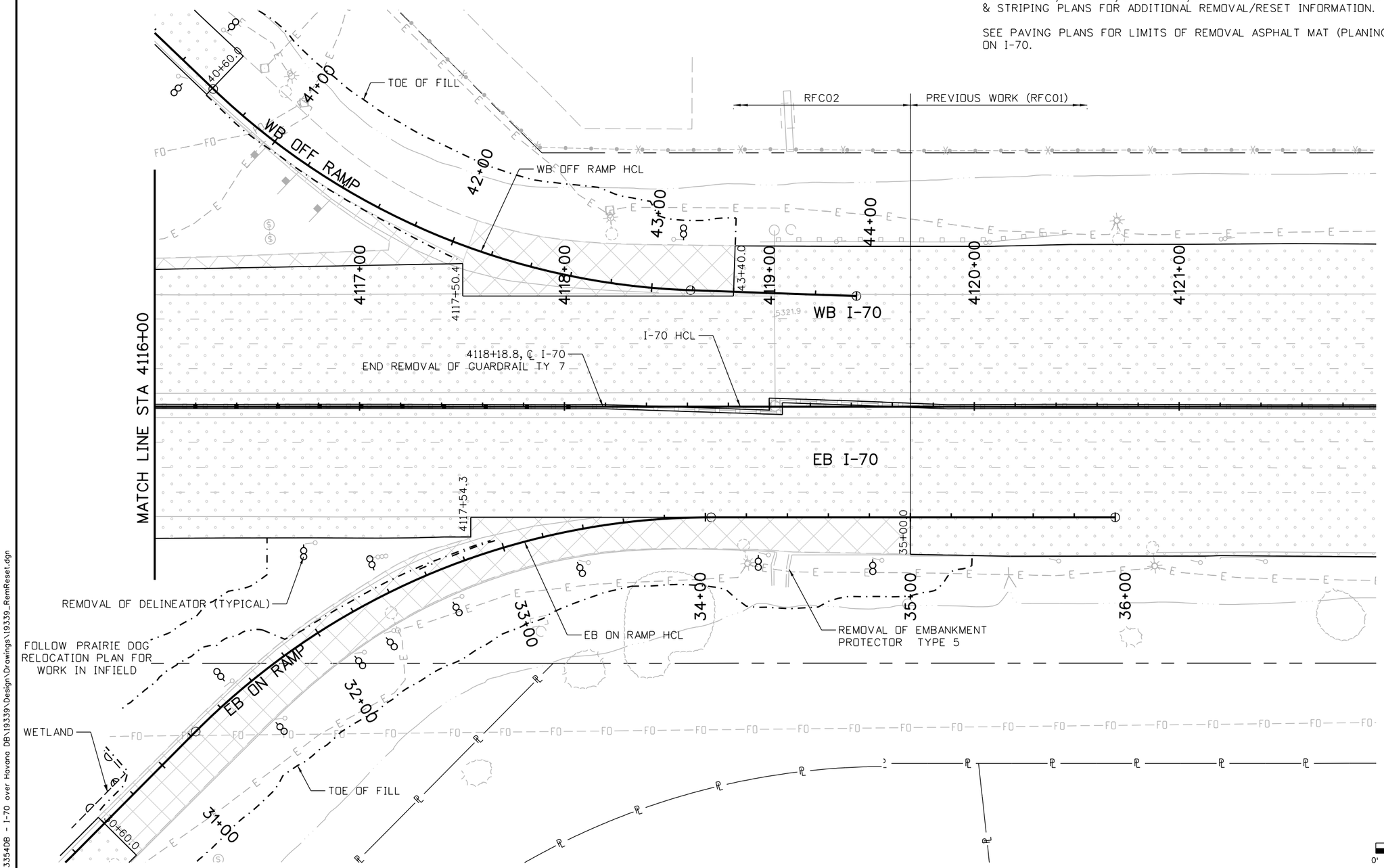

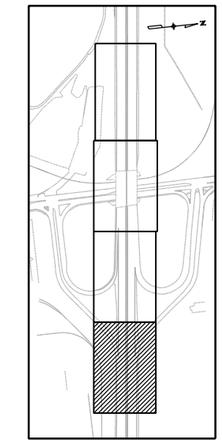

KEYMAP

LEGEND

REMOVAL OF ASPHALT MAT

REMOVAL OF ASPHALT MAT (PLANING)

RFC02 JUNE, 2015 (REVIEW)

bob.harr 11:58:45 AM P:\13033540B - I-70 over Havana DB\19339\Design\Drawings\19339_RemReset.dgn

Print Date: 6/17/2015	Sheet Revisions	Colorado Department of Transportation	As Constructed
File Name: 19339_RemReset.dgn	Date: / Comments / Init.	4670 N. Holly, Denver, CO 80216, Phone: 303-398-6767 FAX: 303-398-6781	No Revisions:
Horiz. Scale: 1:50 Vert. Scale: As Noted		Region 1 KK	Revised:
TSIOUVARAS SIMMONS HOLDERNESS CONSULTING ENGINEERS			Void:

I-70 OVER HAVANA STREET DESIGN-BUILD			
REMOVAL AND RESET PLAN			
Designer: R. HARR	Structure Numbers		
Detailer: R. HARR			
Sheet Subset: REM	Subset Sheets: 4 of 4		

Project No./Code
FBR 0704-230
19339
Sheet Number 19

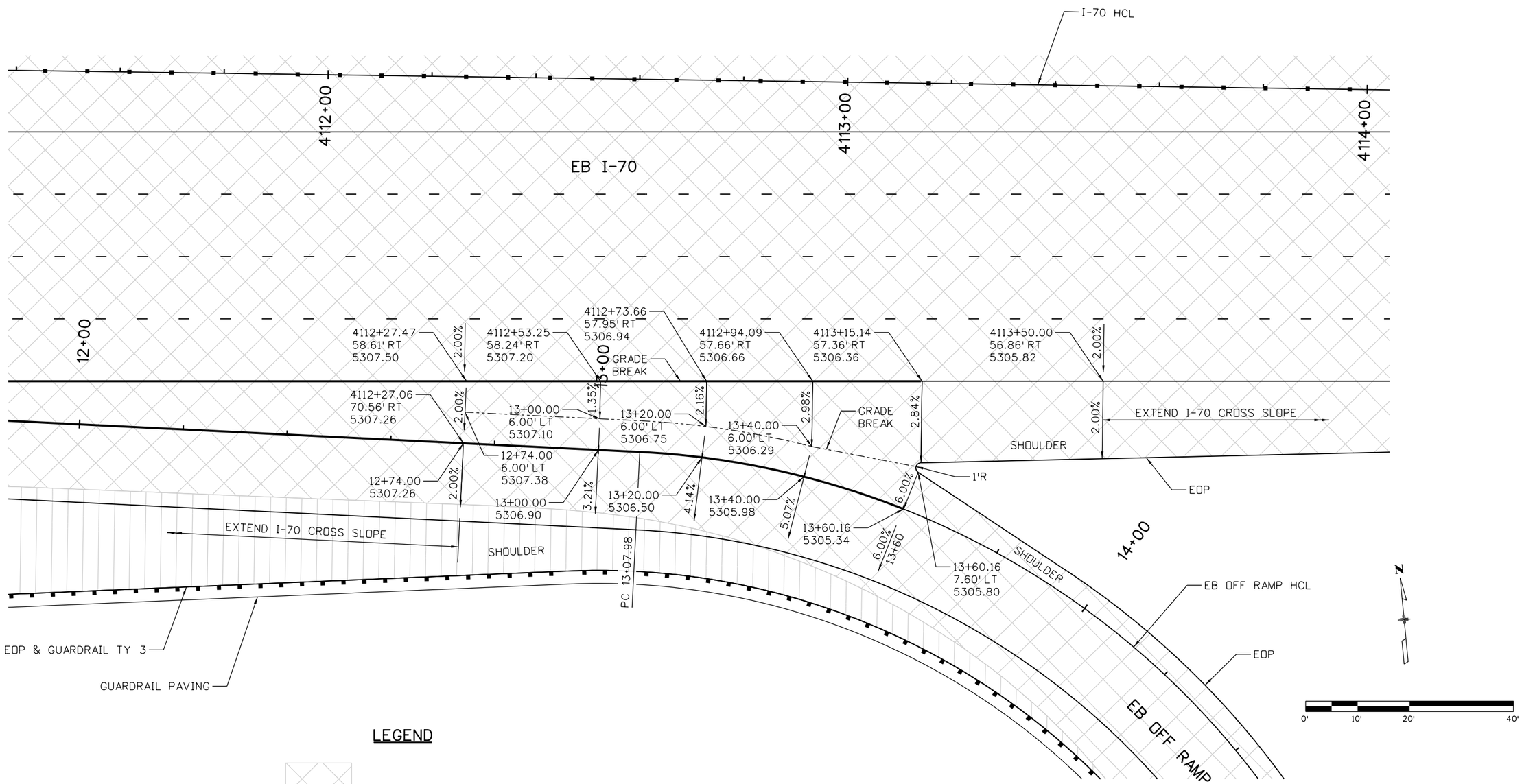

LEGEND

VARIABLE DEPTH OVERLAY

FULL DEPTH WIDENING

RFC02 JUNE, 2015 (REVIEW)

bob.harr 11:58:50 AM P:\13033540B - I-70 over Havana DB\19339\Design\Drawings\19339_GoreDet.dgn

Print Date: 6/17/2015	Sheet Revisions	Colorado Department of Transportation	As Constructed
File Name: 19339_GoreDet.dgn	Date: / Comments / Init.	4670 N. Holly, Denver, CO 80216, Phone: 303-398-6767 FAX: 303-398-6781	No Revisions:
Horiz. Scale: 1:20 Vert. Scale: As Noted		Region 1 KK	Revised:
LAWRENCE TSIOUVARAS SIMMONS HOLDERNESS CONSULTING ENGINEERS			Void:

I-70 OVER HAVANA STREET DESIGN-BUILD
EB OFF RAMP / I-70
GORE DETAIL

Designer:	R. HARR	Structure Numbers	
Detailer:	R. HARR		
Sheet Subset:	DET	Subset Sheets:	1 of 4

Project No./Code
FBR 0704-230
19339
Sheet Number 20

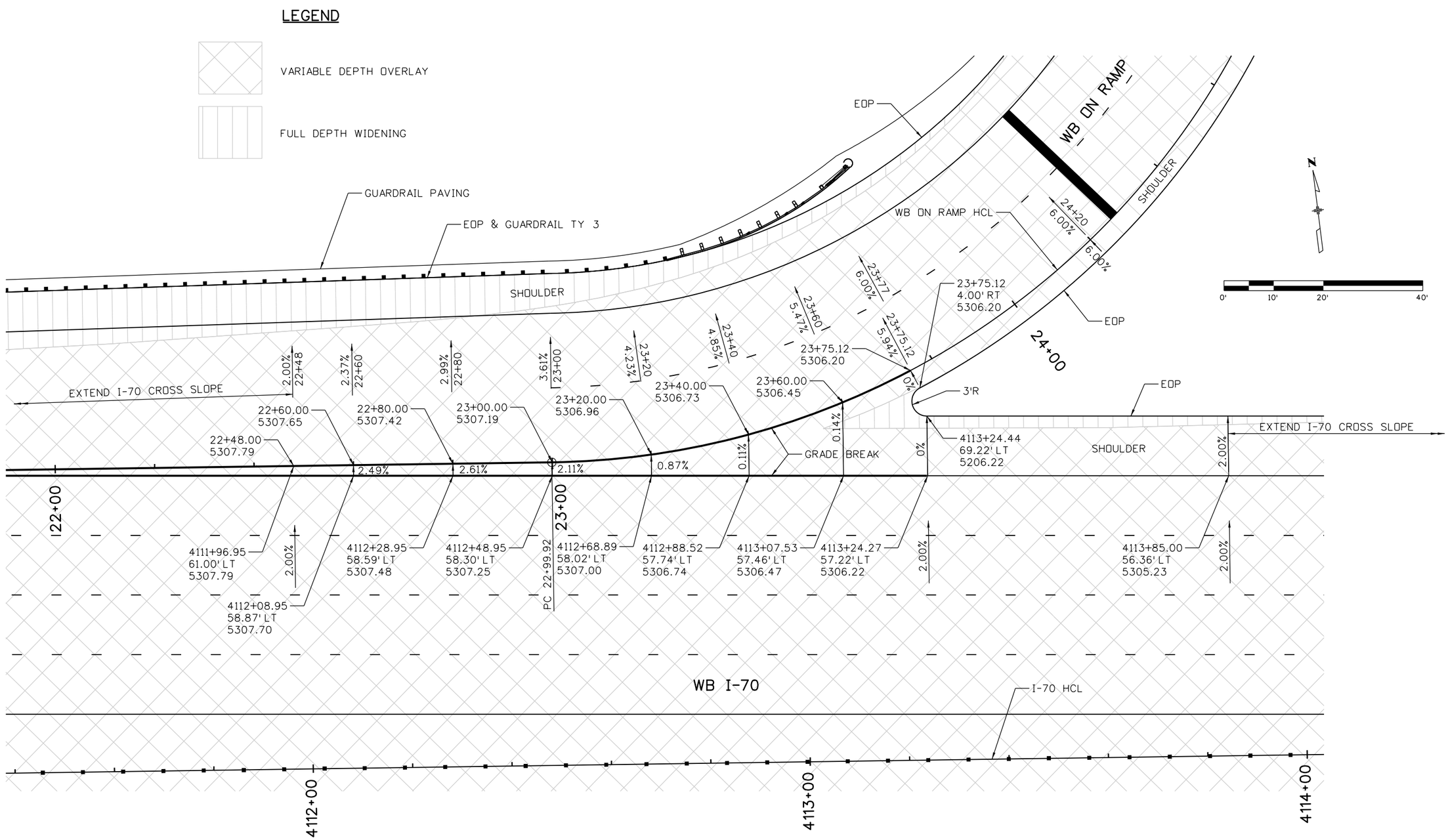

RFC02 JUNE, 2015 (REVIEW)

bob.harr 11:58:53 AM P:\1303354DB - I-70 over Havana DB\19339\Design\Drawings\19339_GoreDet.dgn

Print Date: 6/17/2015	Sheet Revisions	Colorado Department of Transportation	As Constructed	I-70 OVER HAVANA STREET DESIGN-BUILD WB ON RAMP / I-70 GORE DETAIL	Project No./Code
File Name: 19339_GoreDet.dgn	Date: / Comments / Init.	4670 N. Holly, Denver, CO 80216, Phone: 303-398-6767 FAX: 303-398-6781	No Revisions:		FBR 0704-230
Horiz. Scale: 1:20 Vert. Scale: As Noted		Region 1 KK	Revised:	Designer: R. HARR / Structure Numbers	19339
LAWRENCE TSIOUVARAS SIMMONS HOLDERNESS CONSULTING ENGINEERS			Void:	Detailer: R. HARR / Sheet Subset: DET / Subset Sheets: 2 of 4	Sheet Number 21

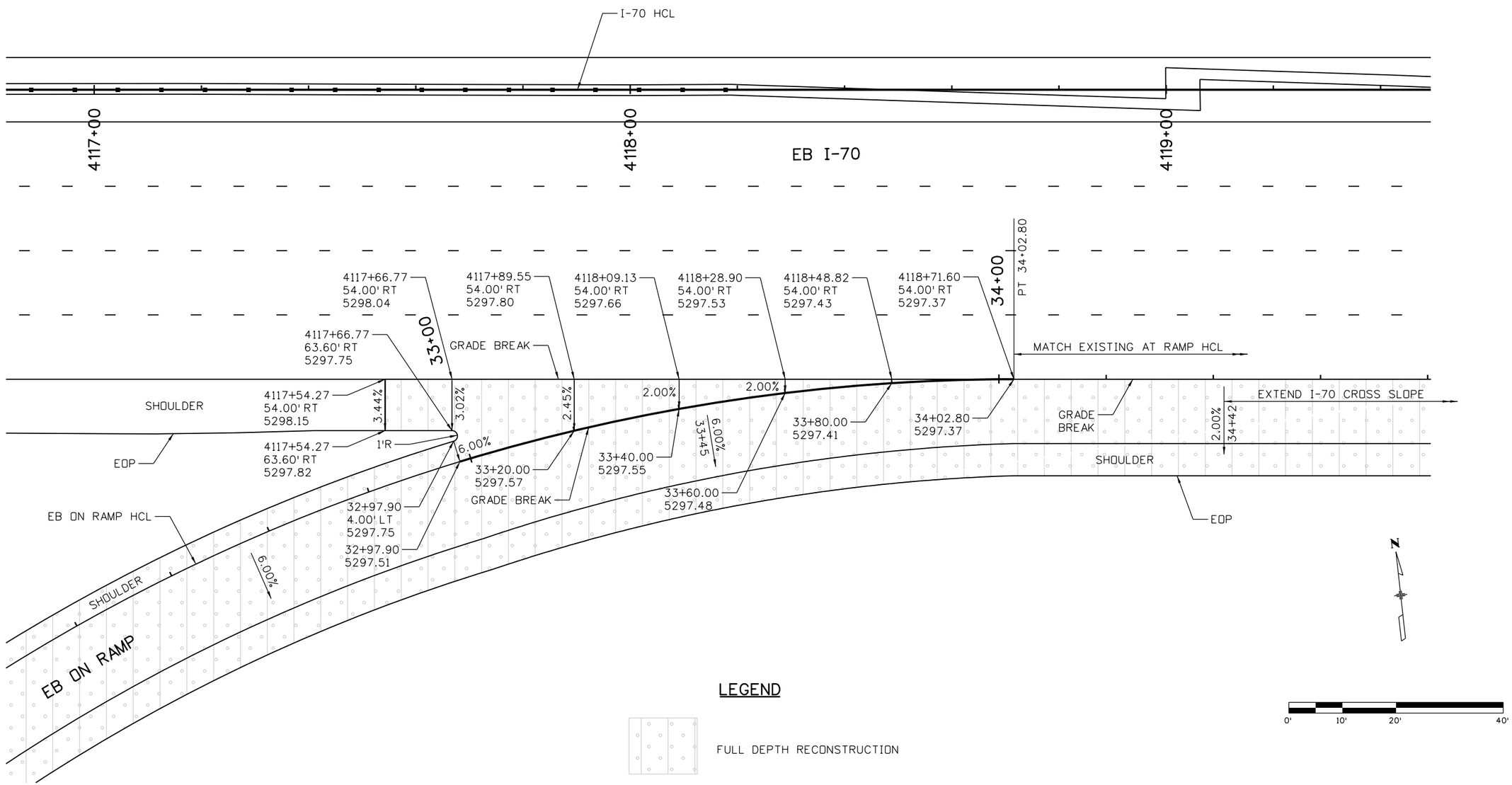

LEGEND

FULL DEPTH RECONSTRUCTION

RFC02 JUNE, 2015 (REVIEW)

bob.harr 11:58:57 AM P:\13033540B - I-70 over Havana DB\19339\Design\Drawings\19339_GoreDet.dgn

Print Date: 6/17/2015	Sheet Revisions	Colorado Department of Transportation	As Constructed
File Name: 19339_GoreDet.dgn	Date: / Comments / Init.	4670 N. Holly, Denver, CO 80216, Phone: 303-398-6767 FAX: 303-398-6781	No Revisions:
Horiz. Scale: 1:20 Vert. Scale: As Noted		Region 1 KK	Revised:
TSIOUVARAS SIMMONS HOLDERNESS CONSULTING ENGINEERS			Void:

I-70 OVER HAVANA STREET DESIGN-BUILD
EB ON RAMP / I-70
GORE DETAIL

Designer:	R. HARR	Structure Numbers	
Detailer:	R. HARR		
Sheet Subset:	DET	Subset Sheets:	3 of 4

Project No./Code: FBR 0704-230

19339

Sheet Number 22

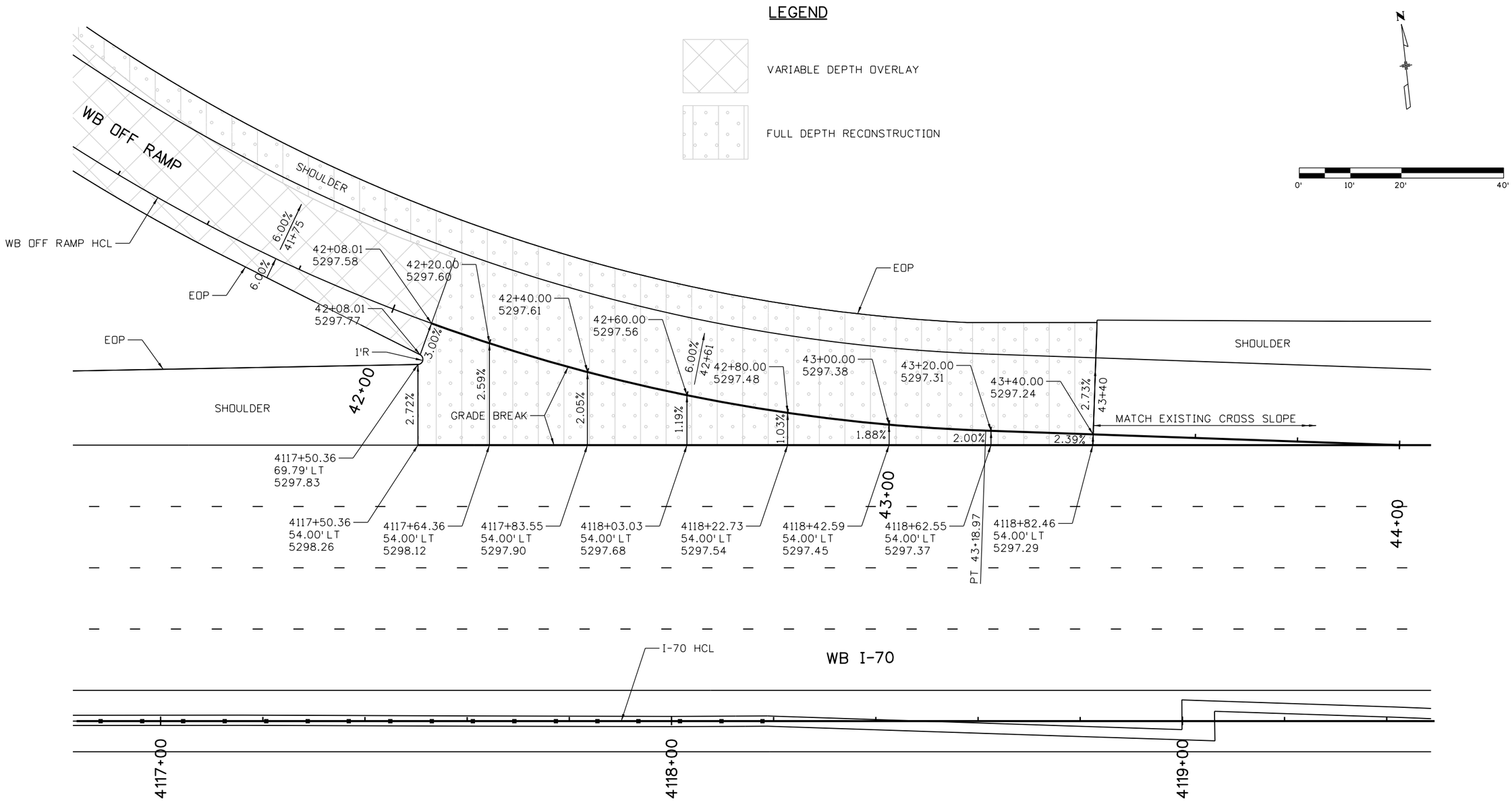

RFC02 JUNE, 2015 (REVIEW)

bob.harr 11:59:01 AM P:\13033540B - I-70 over Havana DB\19339\Design\Drawings\19339_GoreDet.dgn

Print Date: 6/17/2015	Sheet Revisions	Colorado Department of Transportation	As Constructed
File Name: 19339_GoreDet.dgn	Date: / Comments / Init.	4670 N. Holly, Denver, CO 80216, Phone: 303-398-6767 FAX: 303-398-6781	No Revisions:
Horiz. Scale: 1:20 Vert. Scale: As Noted		Region 1 KK	Revised:
LAWRENCE TSIOUVARAS SIMMONS HOLDERNESS CONSULTING ENGINEERS			Void:

I-70 OVER HAVANA STREET DESIGN-BUILD
WB OFF RAMP / I-70
GORE DETAIL

Designer:	R. HARR	Structure Numbers	
Detailer:	R. HARR		
Sheet Subset:	DET	Subset Sheets:	4 of 4

Project No./Code
FBR 0704-230
19339
Sheet Number 23

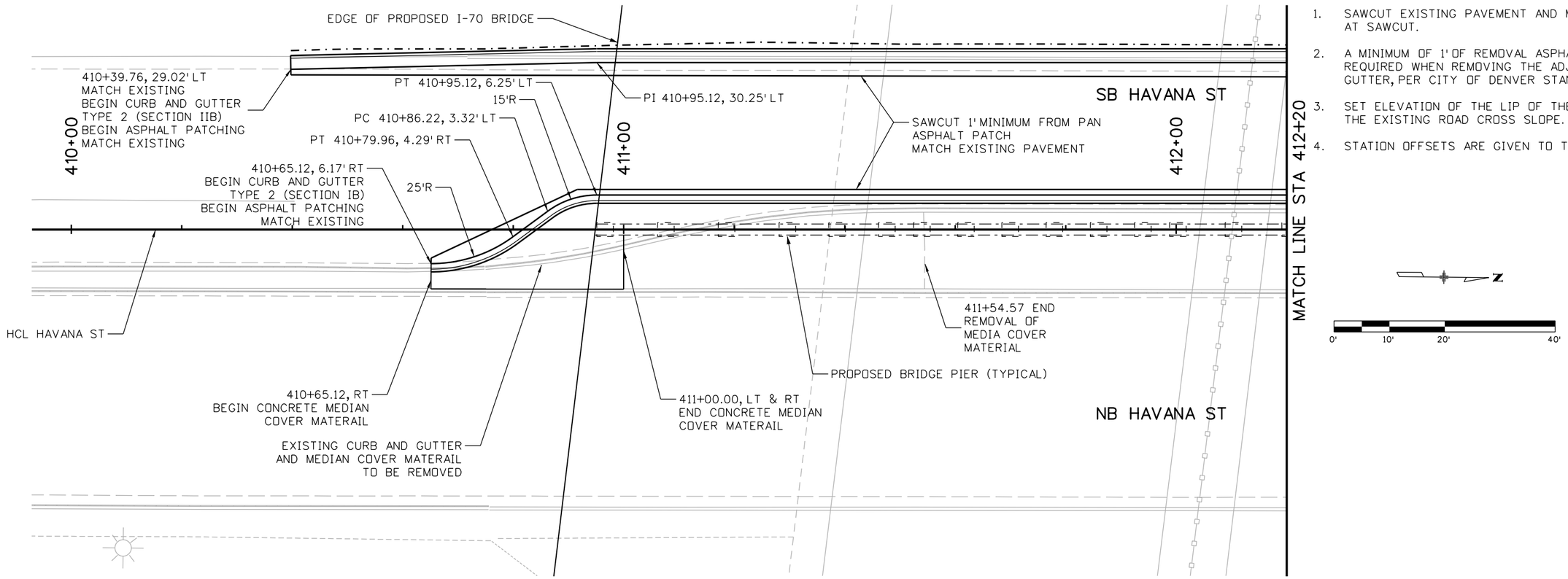

NOTES:

1. SAWCUT EXISTING PAVEMENT AND MATCH ELEVATION AT SAWCUT.
2. A MINIMUM OF 1' OF REMOVAL ASPHALT MAT IS REQUIRED WHEN REMOVING THE ADJACENT CURB AND GUTTER, PER CITY OF DENVER STANDARDS.
3. SET ELEVATION OF THE LIP OF THE PAN BASED ON THE EXISTING ROAD CROSS SLOPE.
4. STATION OFFSETS ARE GIVEN TO THE LIP OF PAN.

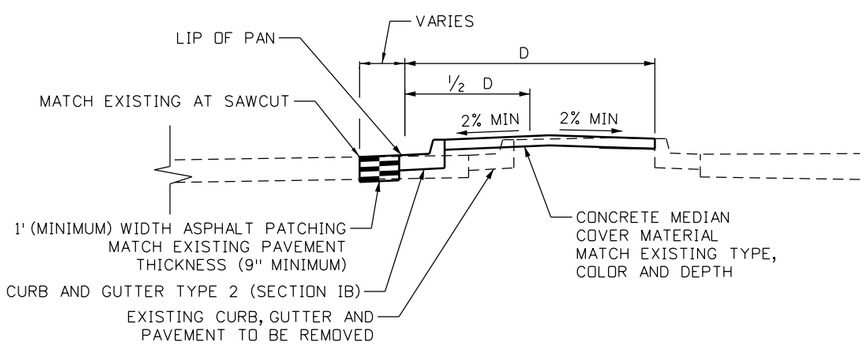

TRANSITION SECTION

STA 410+65.12 TO STA 410+95.12
NTS

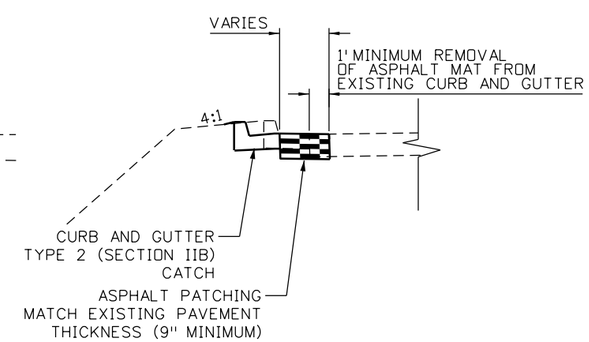

WEST CURB DETAIL

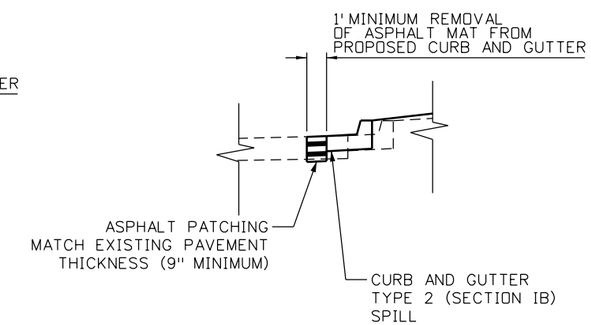

EAST CURB DETAIL

RFC02 JUNE, 2015 (REVIEW)

bob.harr 11:59:05 AM P:\130335408 - I-70 over Havana DB\19339\Design\Drawings\19339_MiscDet.dgn

Print Date: 6/17/2015	Sheet Revisions	Colorado Department of Transportation	As Constructed
File Name: 19339_MiscDet.dgn	Date: / Comments / Init.	4670 N. Holly, Denver, CO 80216, Phone: 303-398-6767 FAX: 303-398-6781	No Revisions:
Horiz. Scale: 1:20 Vert. Scale: As Noted		Region 1 KK	Revised:
LAWRENCE TSIOUVARAS SIMMONS HOLDERNESS CONSULTING ENGINEERS			Void:

I-70 OVER HAVANA STREET DESIGN-BUILD
HAVANA STREET MEDIAN
MISCELLANEOUS DETAILS (1 OF 2)

Designer:	A. ROSS	Structure Numbers	
Detailer:	A. MELNIC		
Sheet Subset:	DET	Subset Sheets:	1 of 2

Project No./Code
FBR 0704-230
19339
Sheet Number 24

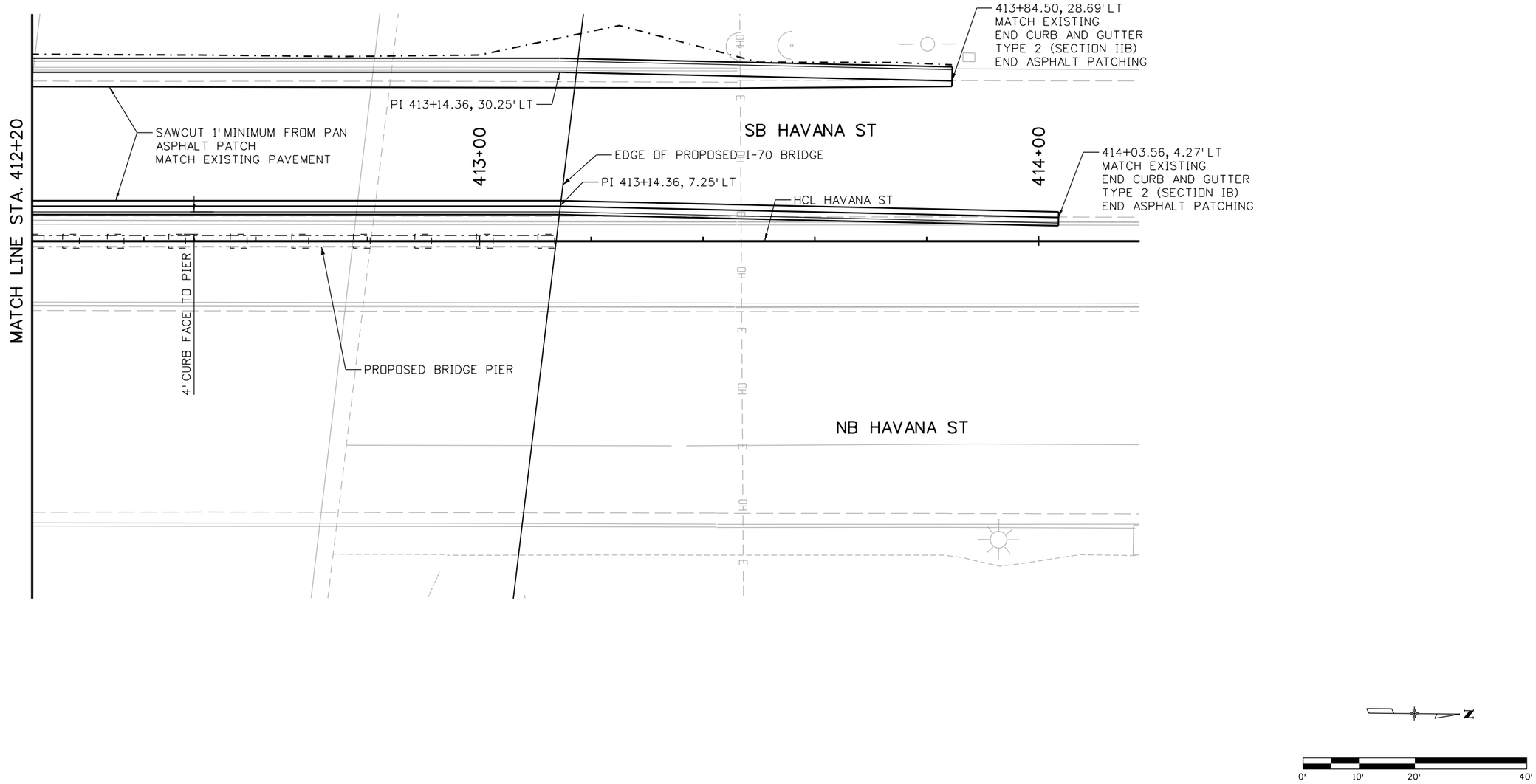

RFC02 JUNE, 2015 (REVIEW)

bob.harr 11:59:09 AM P:\13033540B - I-70 over Havana DB\19339\Design\Drawings\19339_MiscDet.dgn

Print Date: 6/17/2015	Sheet Revisions	Colorado Department of Transportation	As Constructed
File Name: 19339_MiscDet.dgn	Date: / Comments / Init.	4670 N. Holly, Denver, CO 80216, Phone: 303-398-6767 FAX: 303-398-6781	No Revisions:
Horiz. Scale: 1:20 Vert. Scale: As Noted		Region 1 KK	Revised:
TSIOUVARAS SIMMONS HOLDERNESS CONSULTING ENGINEERS			Void:

I-70 OVER HAVANA STREET DESIGN-BUILD HAVANA STREET MEDIAN MISCELLANEOUS DETAILS (2 OF 2)			Project No./Code
Designer: A. ROSS	Structure Numbers		FBR 0704-230
Detailer: A. MELNIC			19339
Sheet Subset: DET	Subset Sheets: 2 of 2		Sheet Number 25

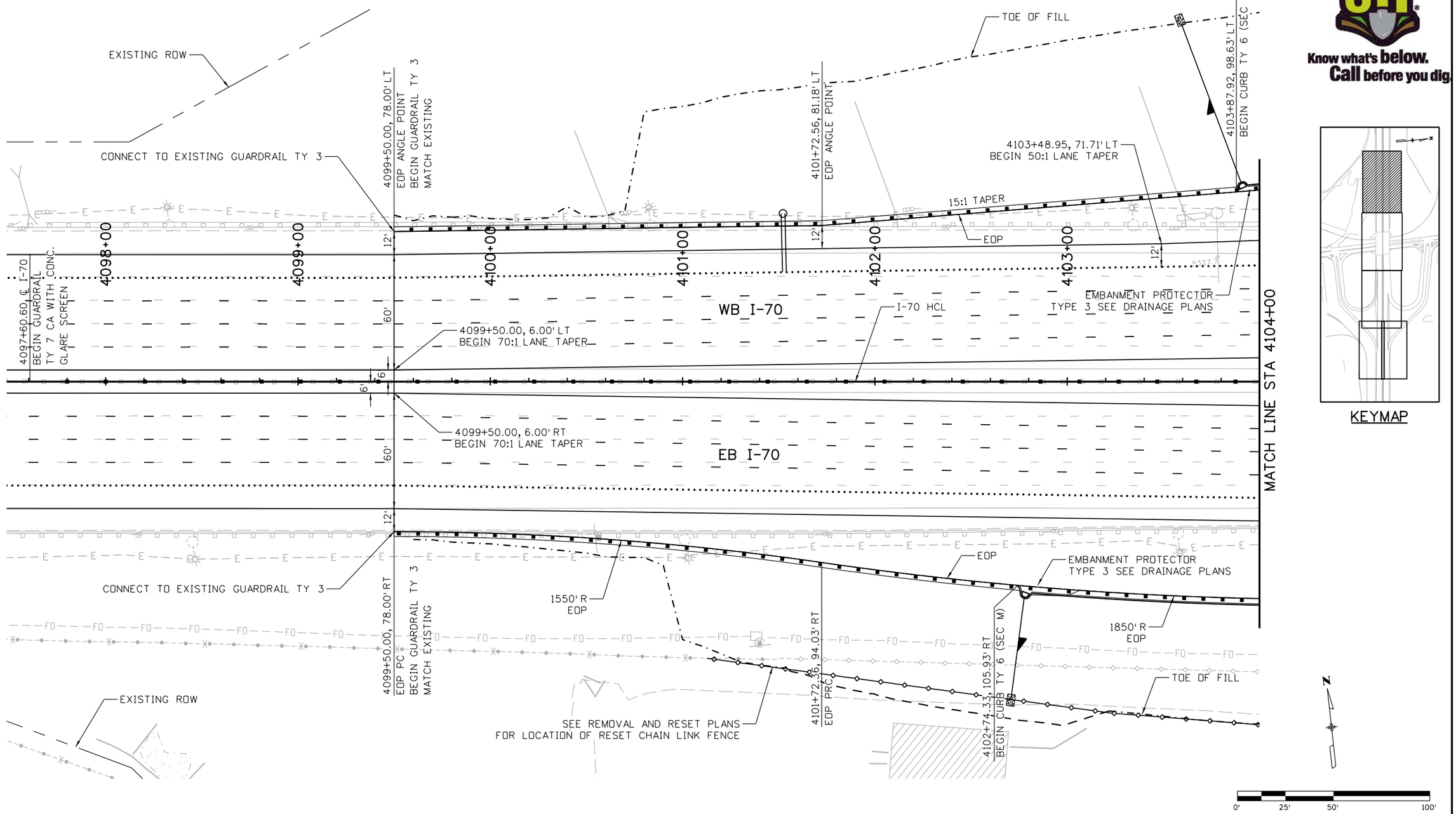

Know what's below. Call before you dig.

KEYMAP

RFC02 JUNE, 2015 (REVIEW)

bob.harr 11:59:14 AM P:\1303354DB - I-70 over Havana DB\19339\Design\Drawings\19339_Plan.dgn

Print Date: 6/17/2015	Sheet Revisions	Colorado Department of Transportation	As Constructed
File Name: 19339_Plan.dgn	Date: / Comments / Init.	4670 N. Holly, Denver, CO 80216, Phone: 303-398-6767 FAX: 303-398-6781	No Revisions:
Horiz. Scale: 1:50 Vert. Scale: As Noted		Region 1 KK	Revised:
LAWRENCE TSIOUVARAS SIMMONS HOLDERNESS CONSULTING ENGINEERS			Void:

I-70 OVER HAVANA STREET DESIGN-BUILD I-70 ROADWAY PLAN			Project No./Code
Designer: R. HARR	Structure Numbers		FBR 0704-230
Detailer: R. HARR			19339
Sheet Subset: PLAN	Subset Sheets: 1 of 3		Sheet Number 26

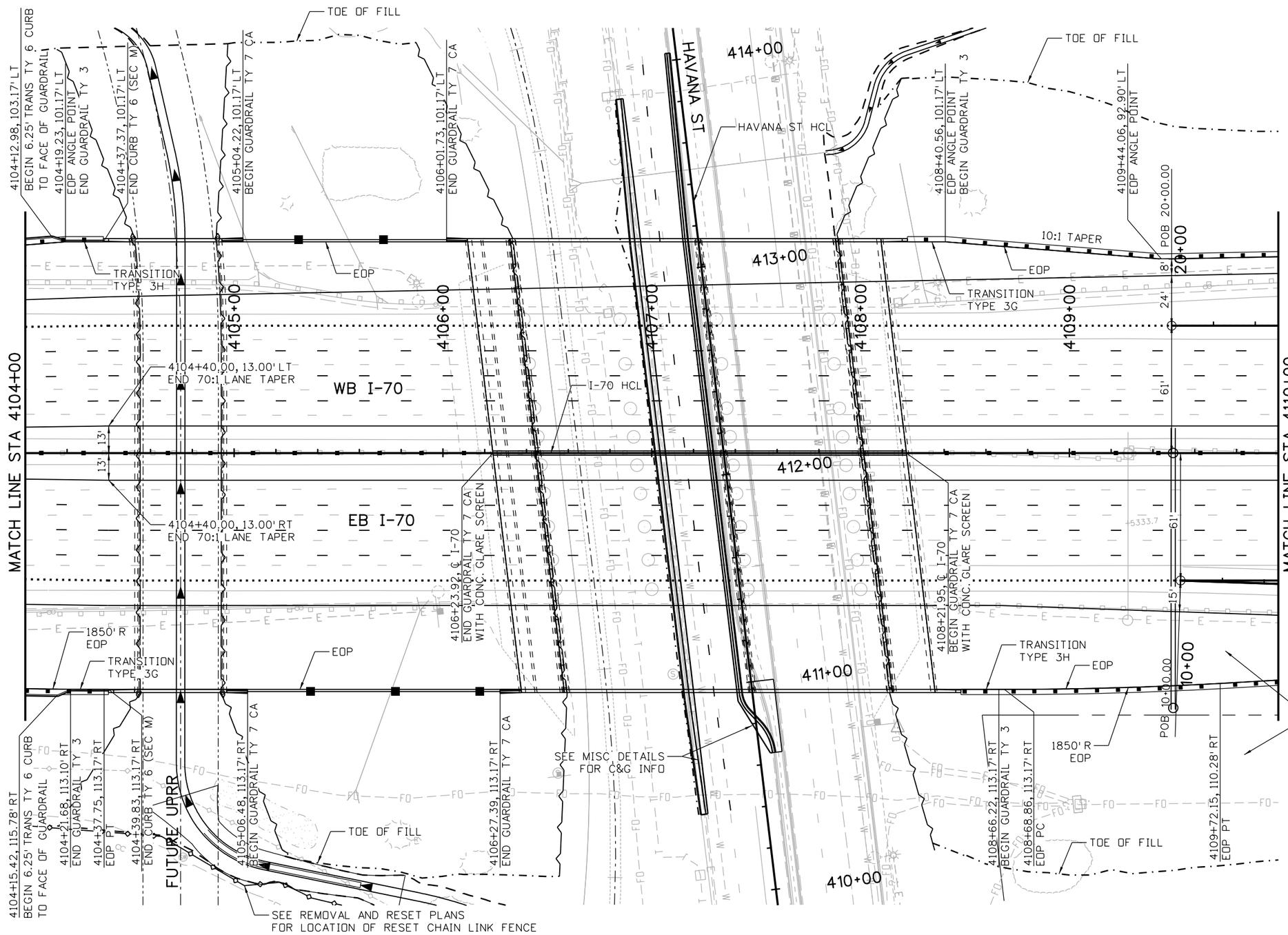

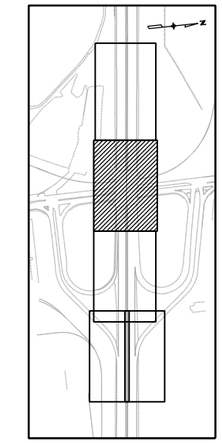

KEYMAP

RFC02 JUNE, 2015 (REVIEW)

Print Date: 6/17/2015		Sheet Revisions		Colorado Department of Transportation	As Constructed
File Name: 19339_Plan.dgn		Date:	Comments	Init.	4670 N. Holly Denver, CO 80216 Phone: 303-398-6767 FAX: 303-398-6781	No Revisions:
Horiz. Scale: 1:50	Vert. Scale: As Noted				Region 1 KK	Revised:
TSIOUVARAS SIMMONS HOLDERNESS CONSULTING ENGINEERS						Void:

I-70 OVER HAVANA STREET DESIGN-BUILD
I-70
ROADWAY PLAN

Designer:	R. HARR	Structure Numbers	
Detailer:	R. HARR		
Sheet Subset:	PLAN	Subset Sheets:	2 of 3

Project No./Code
FBR 0704-230
19339
Sheet Number 27

bob.harr 11:59:18 AM P:\1303354DB - I-70 over Havana DB\19339\Design\Drawings\19339_Plan.dgn

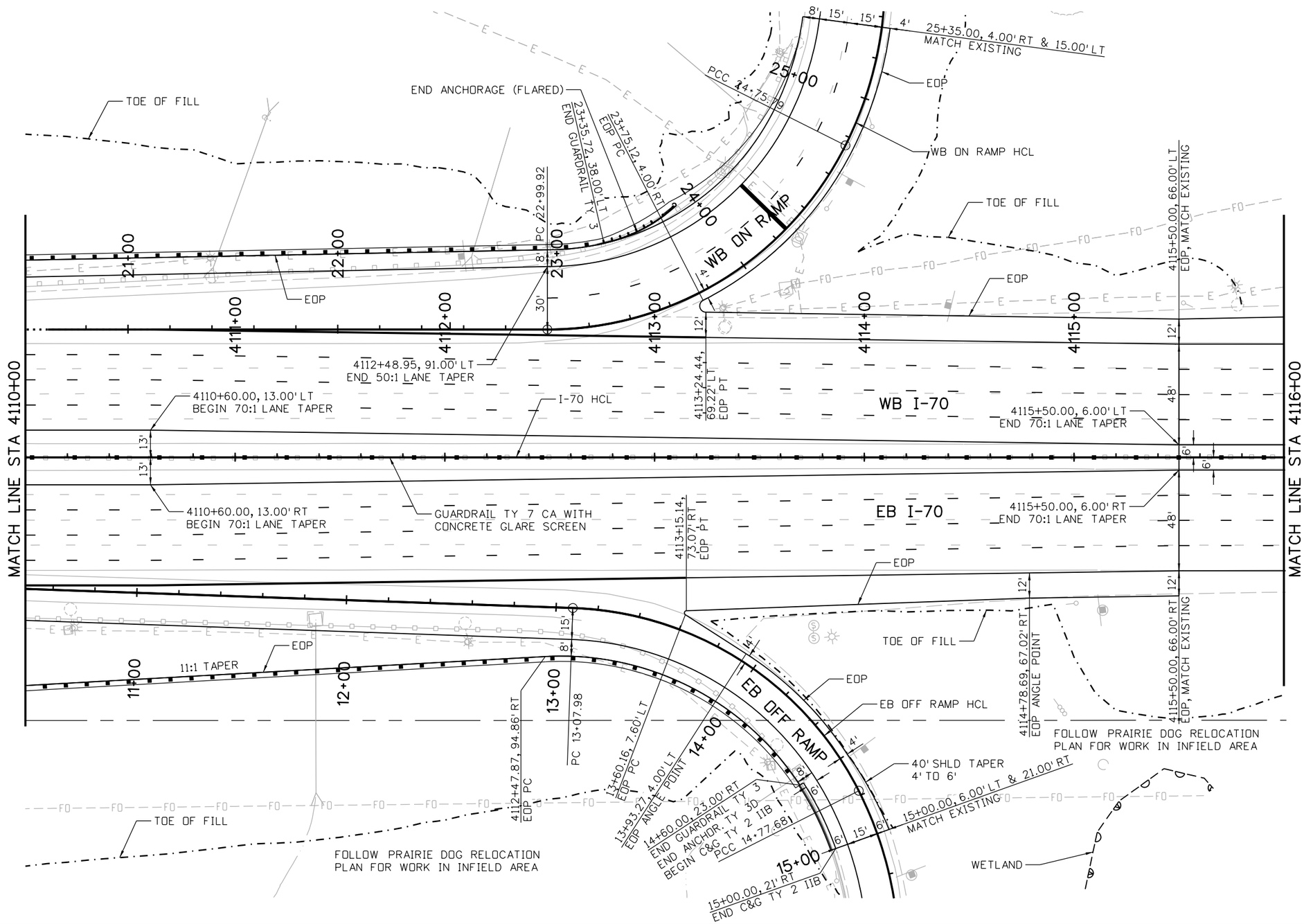

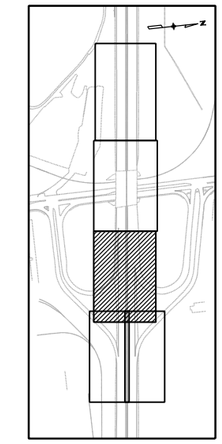

Know what's below. Call before you dig.

RFC02 JUNE, 2015 (REVIEW)

bob.harr 11:59:23 AM P:\1303354DB - I-70 over Havana DB\19339\Design\Drawings\19339_Plan.dgn

Print Date: 6/17/2015	Sheet Revisions	Colorado Department of Transportation	As Constructed
File Name: 19339_Plan.dgn	Date: / Comments / Init.	4670 N. Holly, Denver, CO 80216, Phone: 303-398-6767 FAX: 303-398-6781	No Revisions:
Horiz. Scale: 1:50 Vert. Scale: As Noted		Region 1 KK	Revised:
TSIOUVARAS SIMMONS HOLDERNESS CONSULTING ENGINEERS			Void:

I-70 OVER HAVANA STREET DESIGN-BUILD I-70 ROADWAY PLAN				Project No./Code
Designer: R. HARR	Structure Numbers			FBR 0704-230
Detailer: R. HARR				19339
Sheet Subset: PLAN	Subset Sheets: 3 of 3			Sheet Number 28

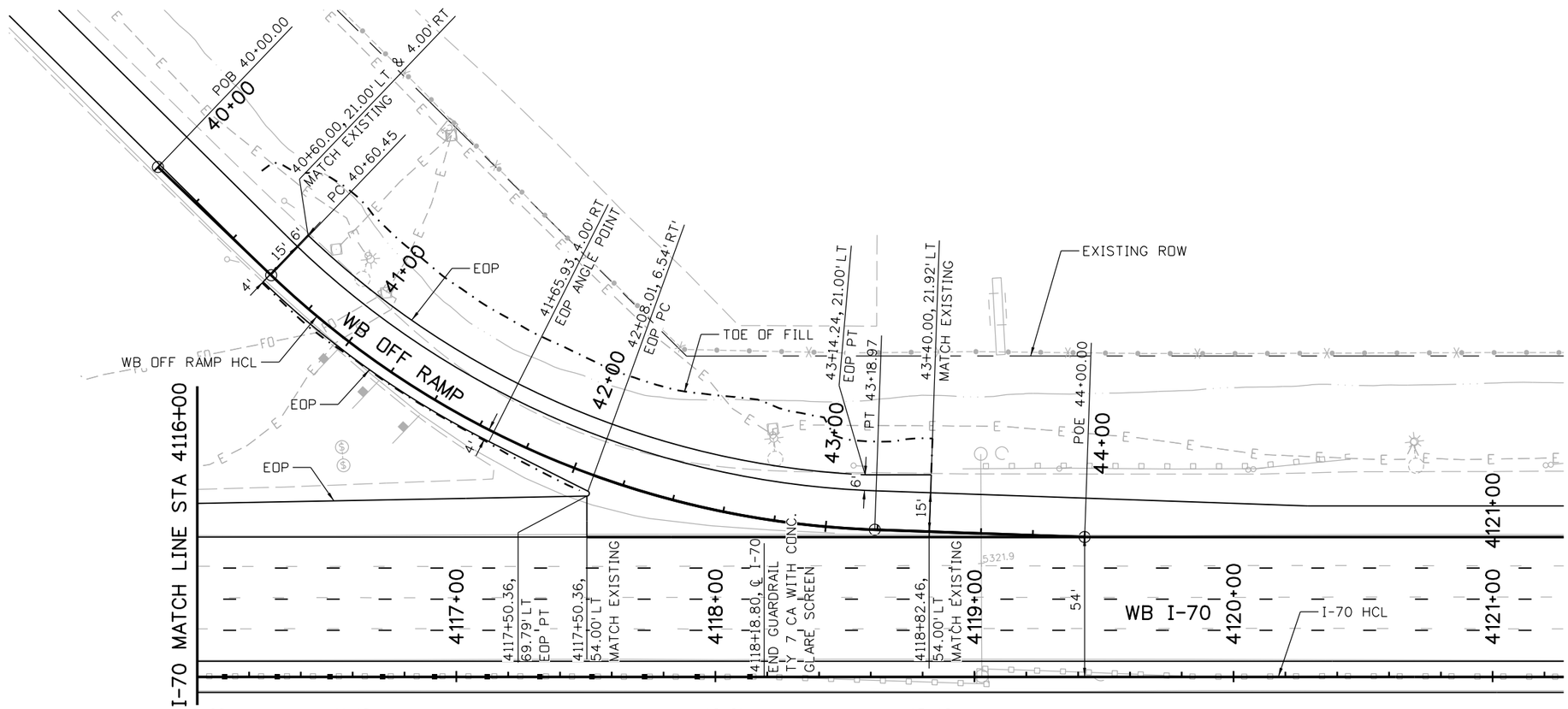

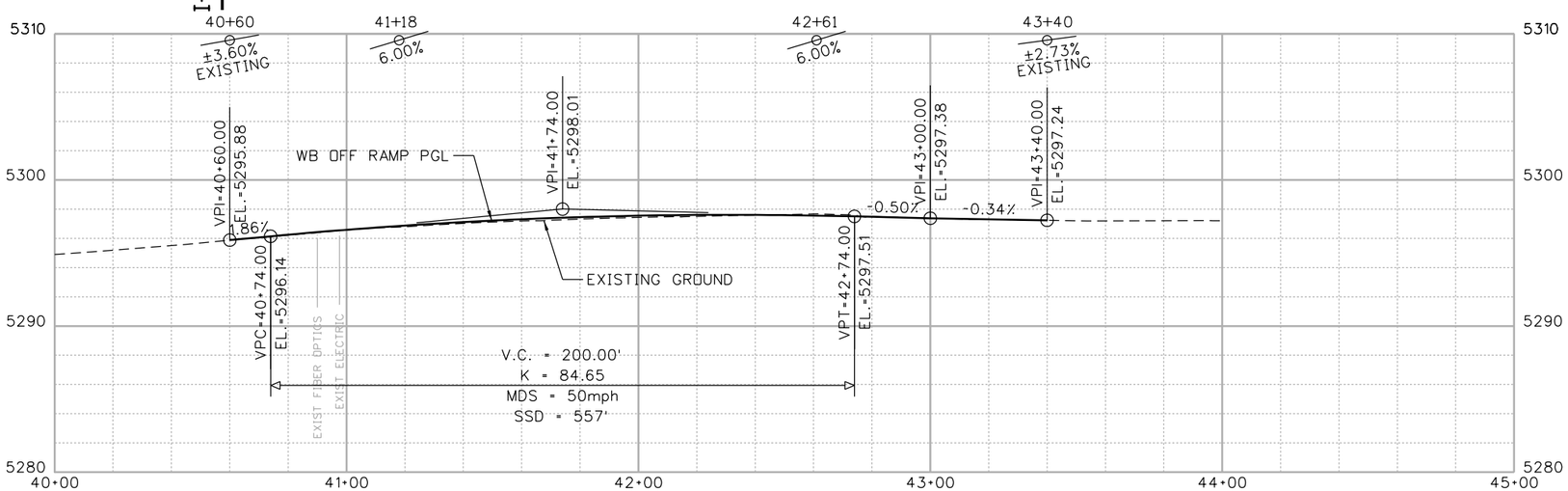

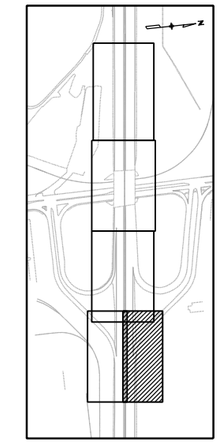

N

0' 25' 50' 100'

Know what's below. Call before you dig.

RFC02 JUNE, 2015 (REVIEW)

bob.harr 11:59:28 AM P:\13033540B - I-70 over Havana DB\19339\Design\Drawings\19339_PlanProf.dgn

Print Date: 6/17/2015	Sheet Revisions	Colorado Department of Transportation	As Constructed
File Name: 19339_PlanProf.dgn	Date: / Comments / Init.	4670 N. Holly, Denver, CO 80216, Phone: 303-398-6767 FAX: 303-398-6781	No Revisions:
Horiz. Scale: 1:50 Vert. Scale: As Noted		Region 1 KK	Revised:
LAWRENCE TSIOUVARAS SIMMONS HOLDERNESS CONSULTING ENGINEERS			Void:

I-70 OVER HAVANA STREET DESIGN-BUILD
WB OFF RAMP
ROADWAY PLAN AND PROFILE

Designer:	R. HARR	Structure Numbers	
Detailer:	R. HARR		
Sheet Subset:	PLANPROF	Subset Sheets:	1 of 2

Project No./Code
FBR 0704-230
19339
Sheet Number 29

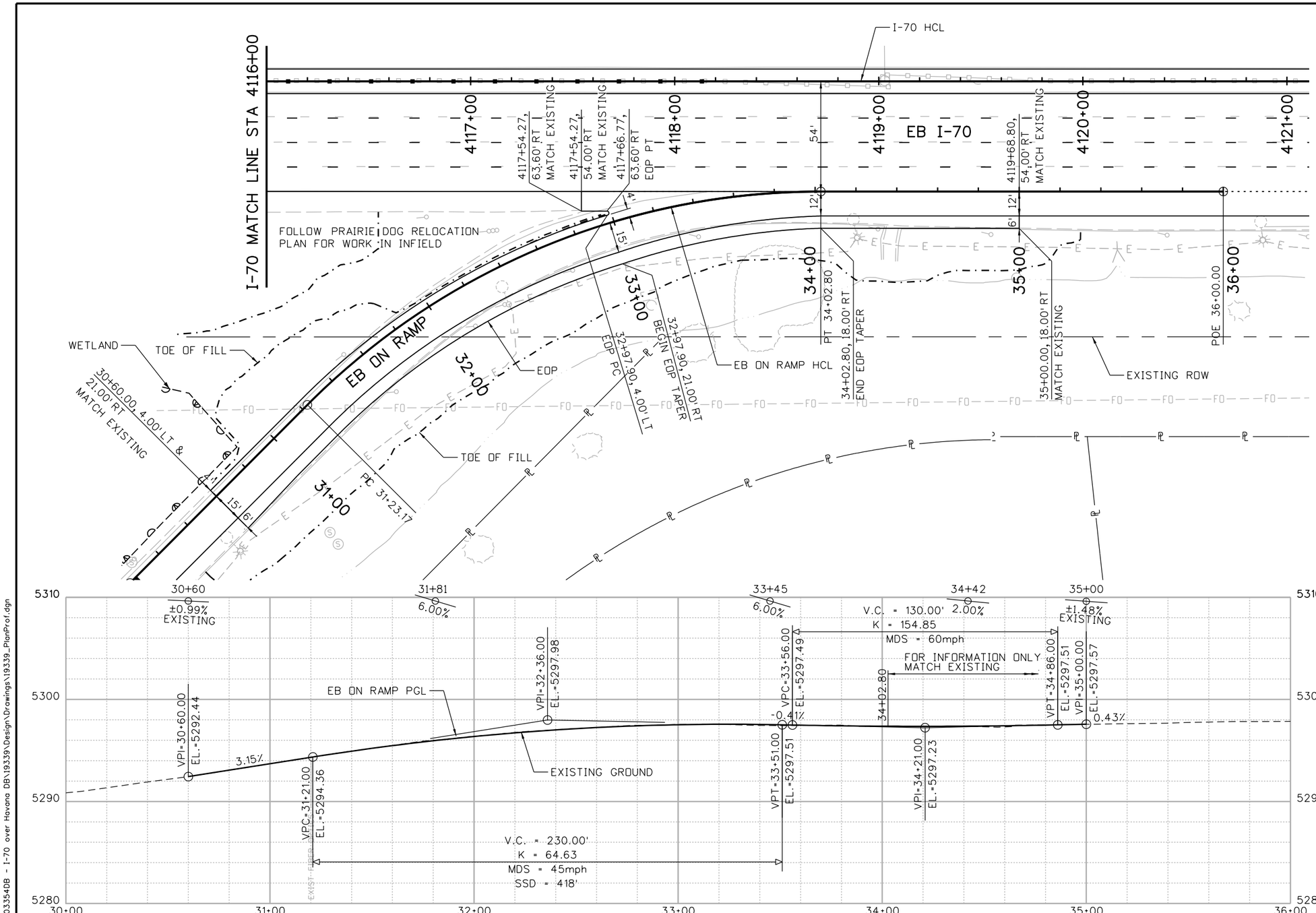

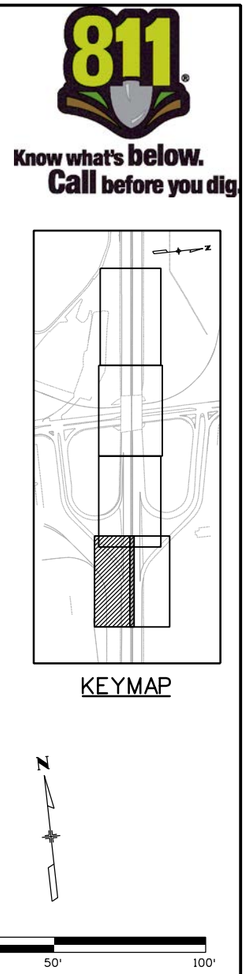

KEYMAP

RFC02 JUNE, 2015 (REVIEW)

Know what's below. Call before you dig.

bob.harr 11:59:33 AM P:\1303354DB - I-70 over Havana DB\19339\Design\Drawings\19339_PlanProf.dgn

Print Date: 6/17/2015	Sheet Revisions	Colorado Department of Transportation	As Constructed
File Name: 19339_PlanProf.dgn	Date: / Comments / Init.	4670 N. Holly, Denver, CO 80216, Phone: 303-398-6767 FAX: 303-398-6781	No Revisions:
Horiz. Scale: 1:50 Vert. Scale: As Noted		Region 1 KK	Revised:
LAWRENCE TSIOUVARAS SIMMONS HOLDERNESS CONSULTING ENGINEERS			Void:

I-70 OVER HAVANA STREET DESIGN-BUILD
EB ON RAMP
ROADWAY PLAN AND PROFILE

Designer:	R. HARR	Structure Numbers	
Detailer:	R. HARR		
Sheet Subset:	PLANPROF	Subset Sheets:	2 of 2

Project No./Code: FBR 0704-230

19339

Sheet Number 30

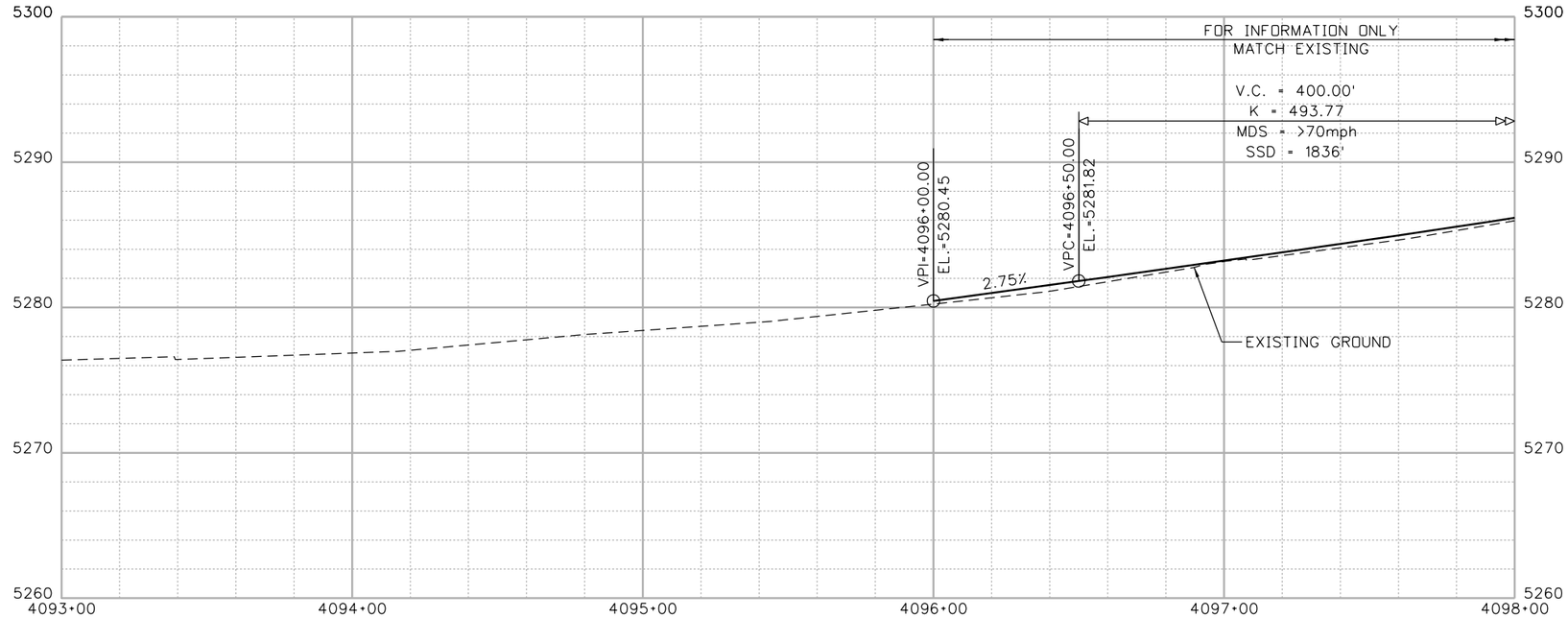

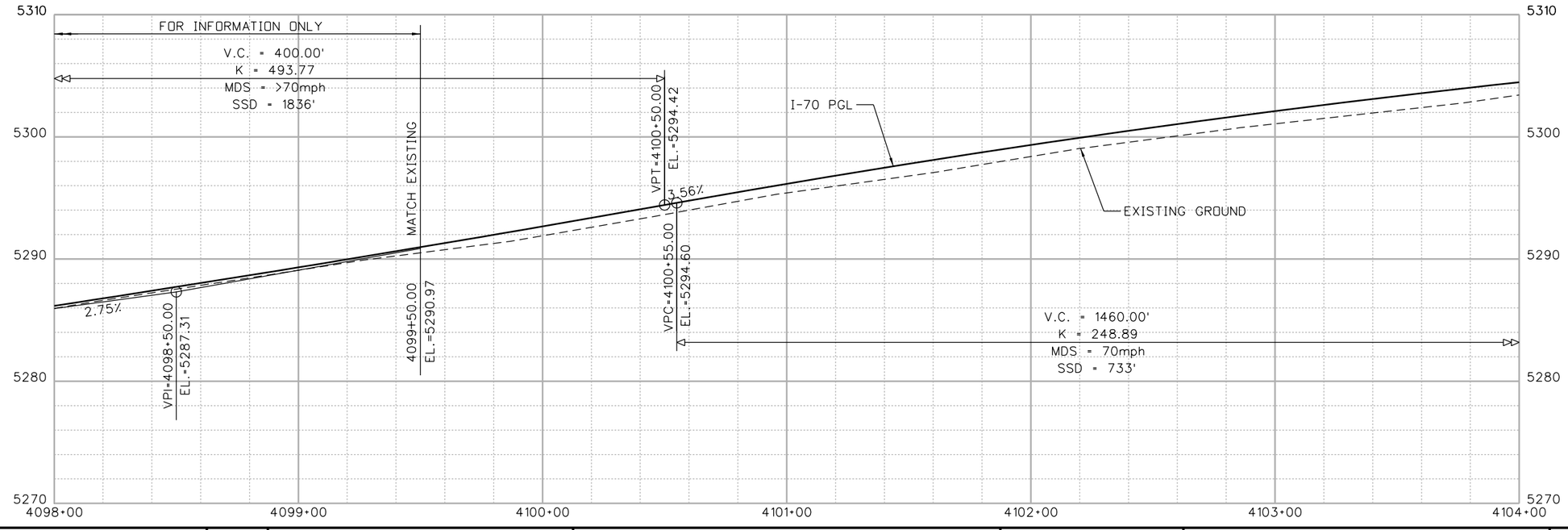

RFC02 JUNE, 2015 (REVIEW)

bob.harr 11:59:37 AM P:\130335408 - I-70 over Havana DB\19339\Design\Drawings\19339_Prof.dgn

Print Date: 6/17/2015	Sheet Revisions	Colorado Department of Transportation	As Constructed
File Name: 19339_Prof.dgn	Date: / Comments / Init.	4670 N. Holly, Denver, CO 80216, Phone: 303-398-6767 FAX: 303-398-6781	No Revisions:
Horiz. Scale: 1:50 Vert. Scale: As Noted		Region 1 KK	Revised:
LAWRENCE TSIOUVARAS SIMMONS HOLDERNESS CONSULTING ENGINEERS			Void:

I-70 OVER HAVANA STREET DESIGN-BUILD
I-70
ROADWAY PROFILE

Designer:	R. HARR	Structure Numbers	
Detailer:	R. HARR		
Sheet Subset:	PROF	Subset Sheets:	1 of 4

Project No./Code
FBR 0704-230
19339
Sheet Number 31

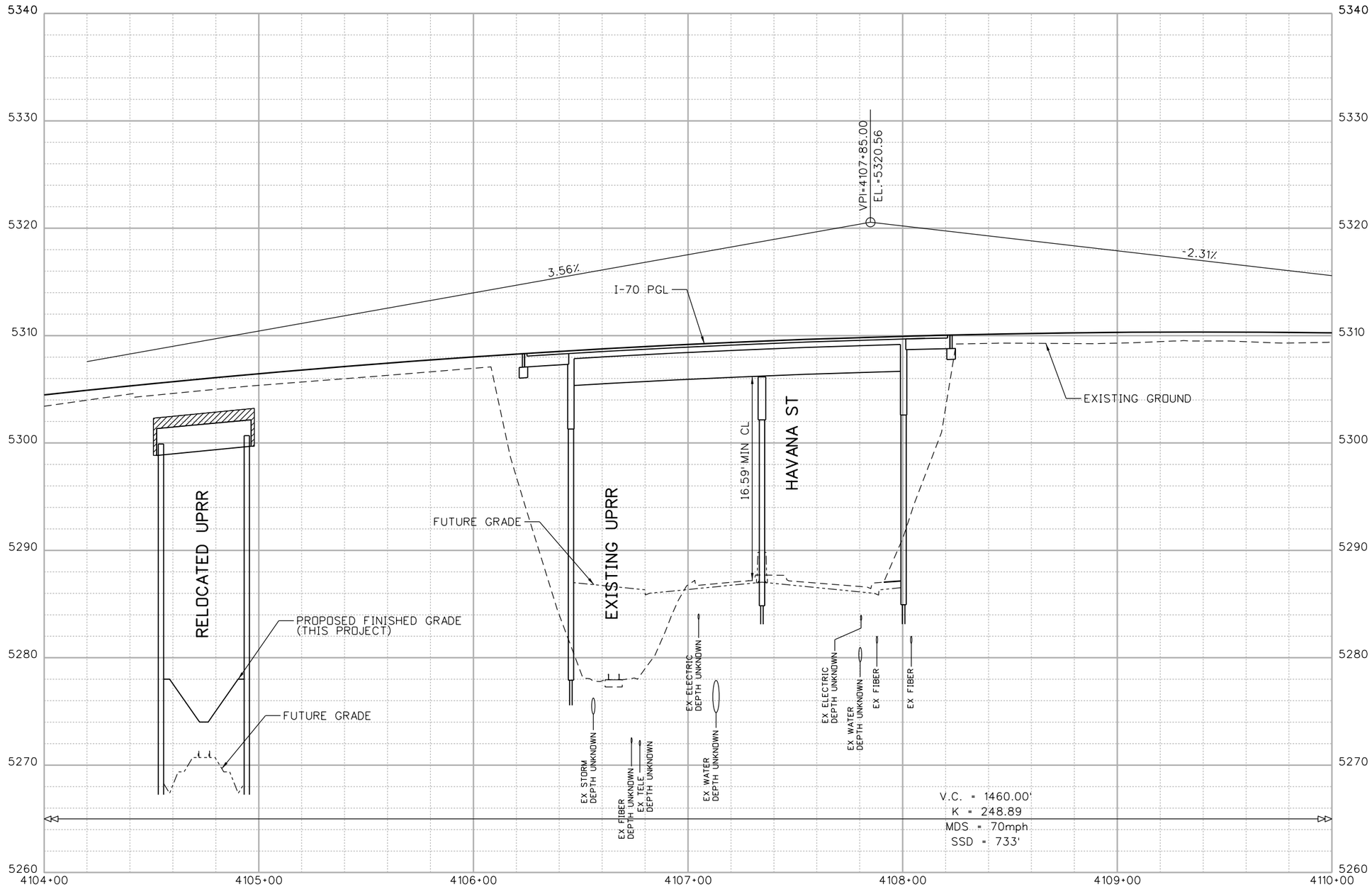

RFC02 JUNE, 2015 (REVIEW)

bob.harr 11:59:41 AM P:\13033540B - I-70 over Havana DB\19339\Design\Drawings\19339_Prof.dgn

Print Date: 6/17/2015			
File Name: 19339_Prof.dgn			
Horiz. Scale: 1:50	Vert. Scale: As Noted		

LAWRENCE
TSIOUVARAS SIMMONS HOLDERNESS
CONSULTING ENGINEERS

00000

Sheet Revisions		
Date:	Comments	Init.

Colorado Department of Transportation
CDOT
4670 N. Holly
Denver, CO 80216
Phone: 303-398-6767 FAX: 303-398-6781
Region 1 KK

As Constructed
No Revisions:
Revised:
Void:

I-70 OVER HAVANA STREET DESIGN-BUILD
I-70
ROADWAY PROFILE

Designer:	R. HARR	Structure Numbers	
Detailer:	R. HARR		
Sheet Subset:	PROF	Subset Sheets:	2 of 4

Project No./Code
FBR 0704-230
19339
Sheet Number 32

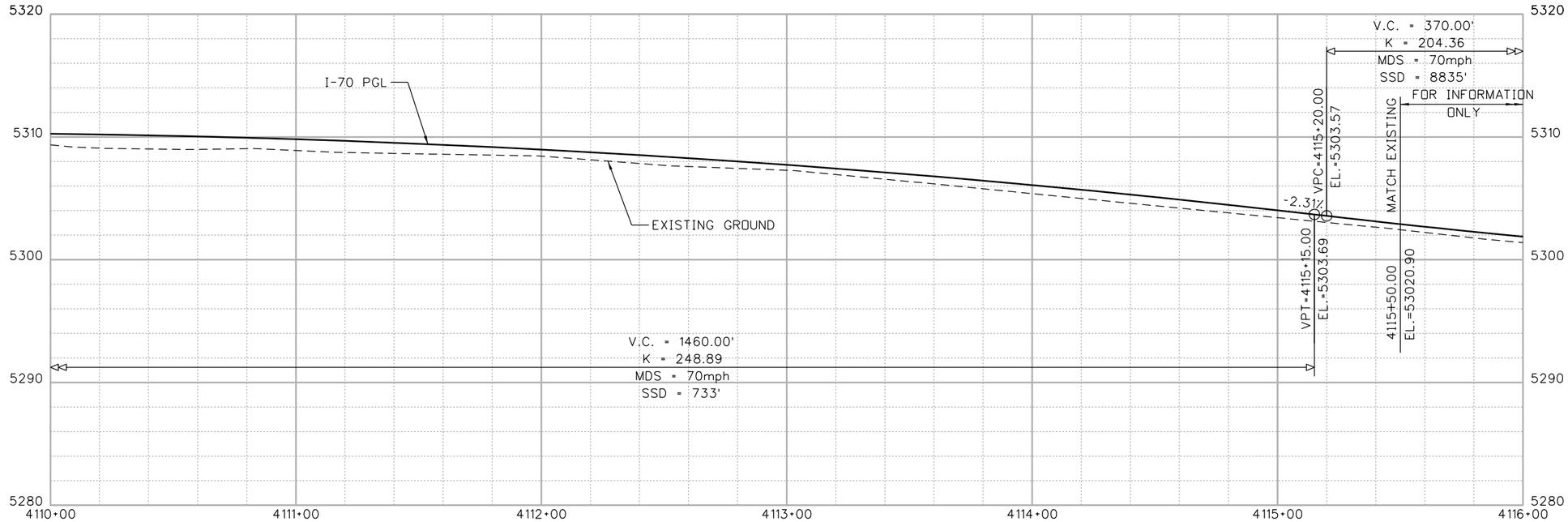

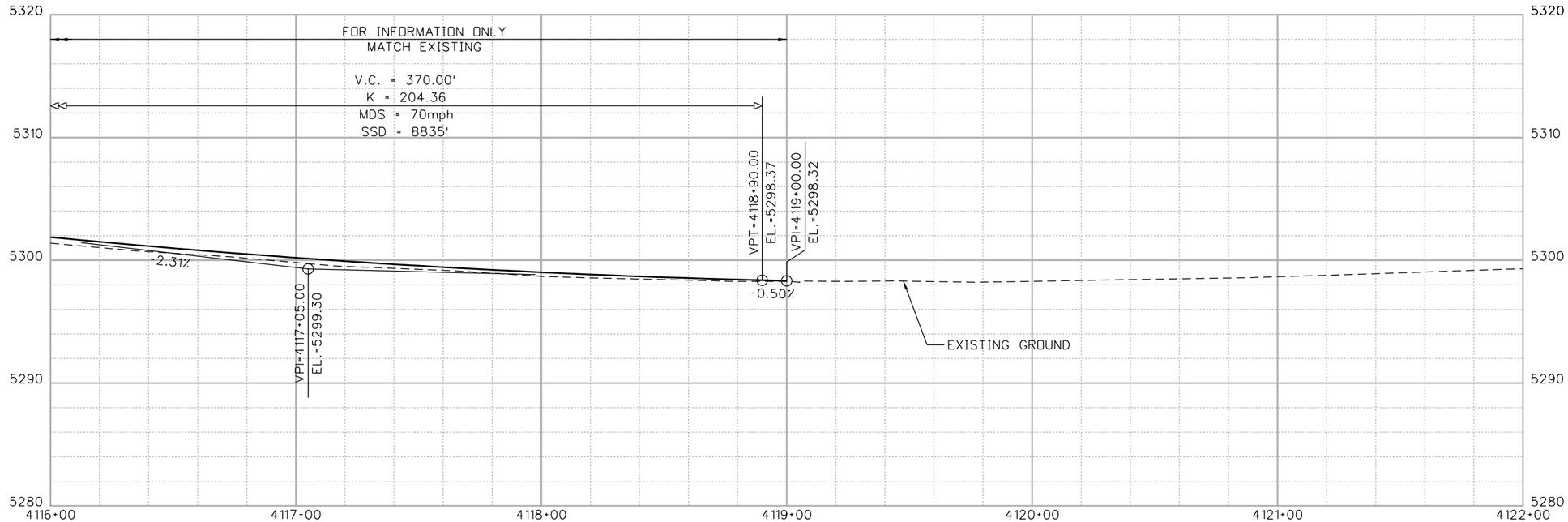

RFC02 JUNE, 2015 (REVIEW)

bob.harr 11:59:44 AM P:\13033540B - I-70 over Havana DB\19339\Design\Drawings\19339_Prof.dgn

Print Date: 6/17/2015
File Name: 19339_Prof.dgn
Horiz. Scale: 1:50 Vert. Scale: As Noted

LAWRENCE
TSIOUVARAS SIMMONS HOLDERNESS
CONSULTING ENGINEERS

Sheet Revisions		
Date:	Comments	Init.

Colorado Department of Transportation
CDOT
4670 N. Holly
Denver, CO 80216
Phone: 303-398-6767 FAX: 303-398-6781
Region 1 KK

As Constructed
No Revisions:
Revised:
Void:

I-70 OVER HAVANA STREET DESIGN-BUILD
I-70
ROADWAY PROFILE

Designer: R. HARR
Detailer: R. HARR
Structure Numbers
Sheet Subset: PROF
Subset Sheets: 3 of 4

Project No./Code
FBR 0704-230
19339
Sheet Number 33

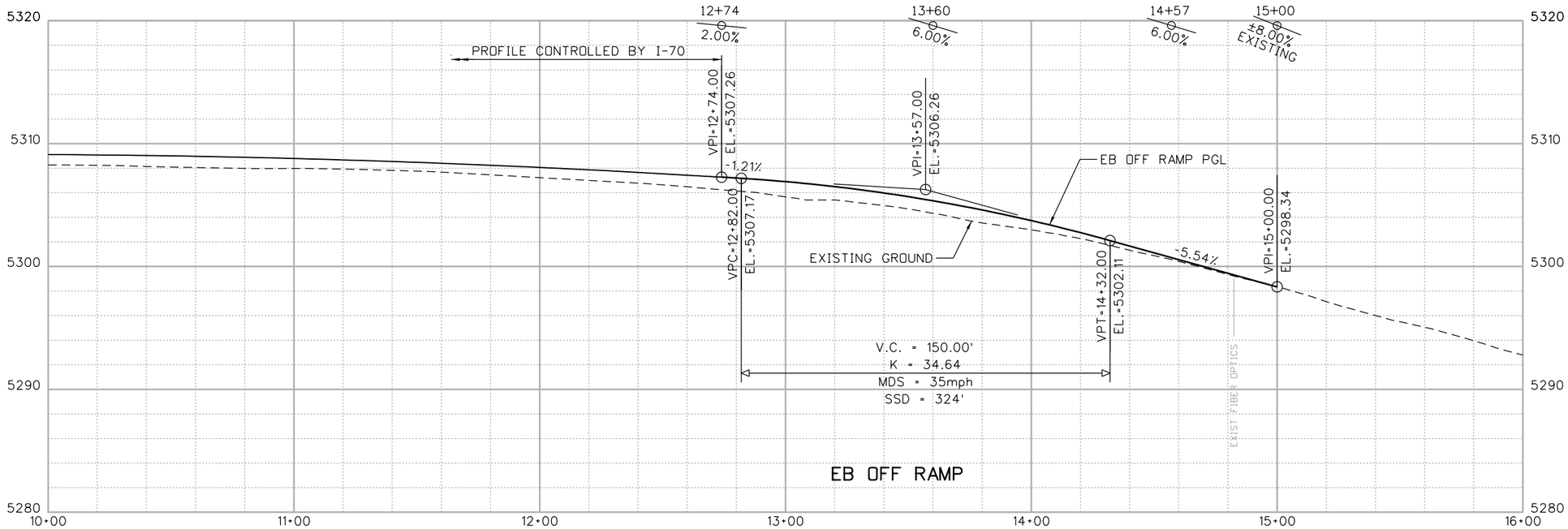

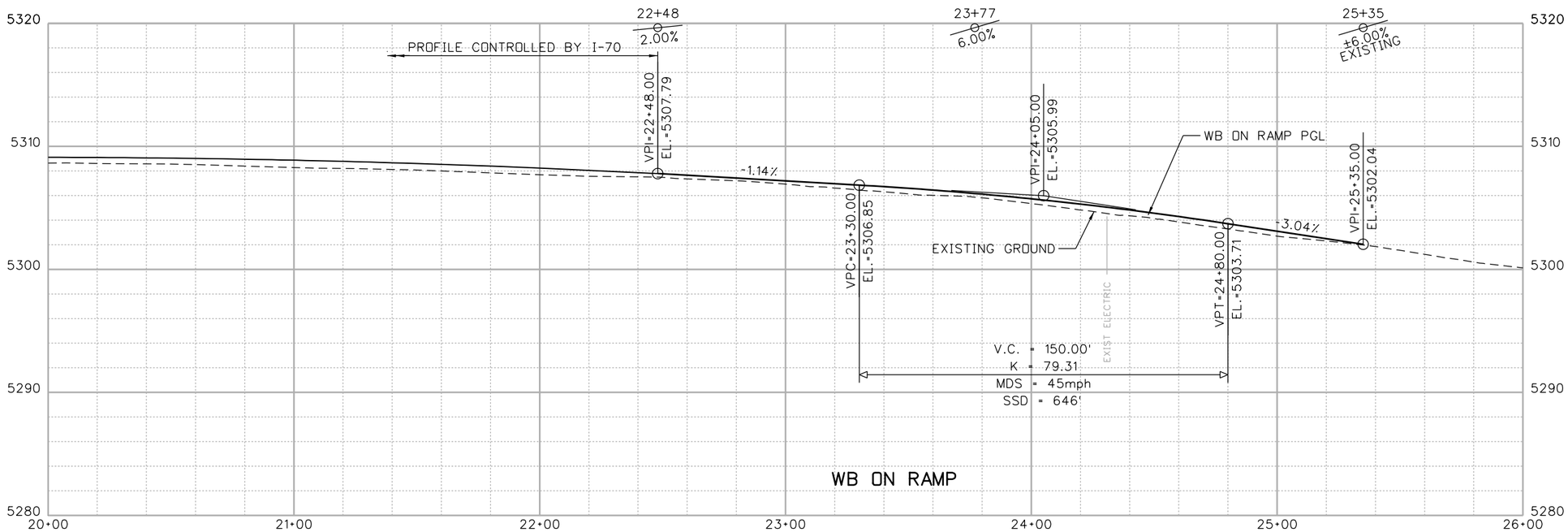

RFC02 JUNE, 2015 (REVIEW)

bob.harr 11:59:48 AM P:\13033540B - I-70 over Havana DB\19339\Design\Drawings\19339_Prof.dgn

Print Date: 6/17/2015	Sheet Revisions	Colorado Department of Transportation	As Constructed
File Name: 19339_Prof.dgn	Date: / Comments / Init.	4670 N. Holly, Denver, CO 80216, Phone: 303-398-6767 FAX: 303-398-6781	No Revisions:
Horiz. Scale: 1:50 Vert. Scale: As Noted		Region 1 KK	Revised:
LAWRENCE TSIOUVARAS SIMMONS HOLDERNESS CONSULTING ENGINEERS			Void:

I-70 OVER HAVANA STREET DESIGN-BUILD EB OFF AND WB ON LOOP RAMPS ROADWAY PROFILE			Project No./Code
Designer: R. HARR	Structure Numbers		FBR 0704-230
Detailer: R. HARR			19339
Sheet Subset: PROF	Subset Sheets: 4 of 4		Sheet Number 34

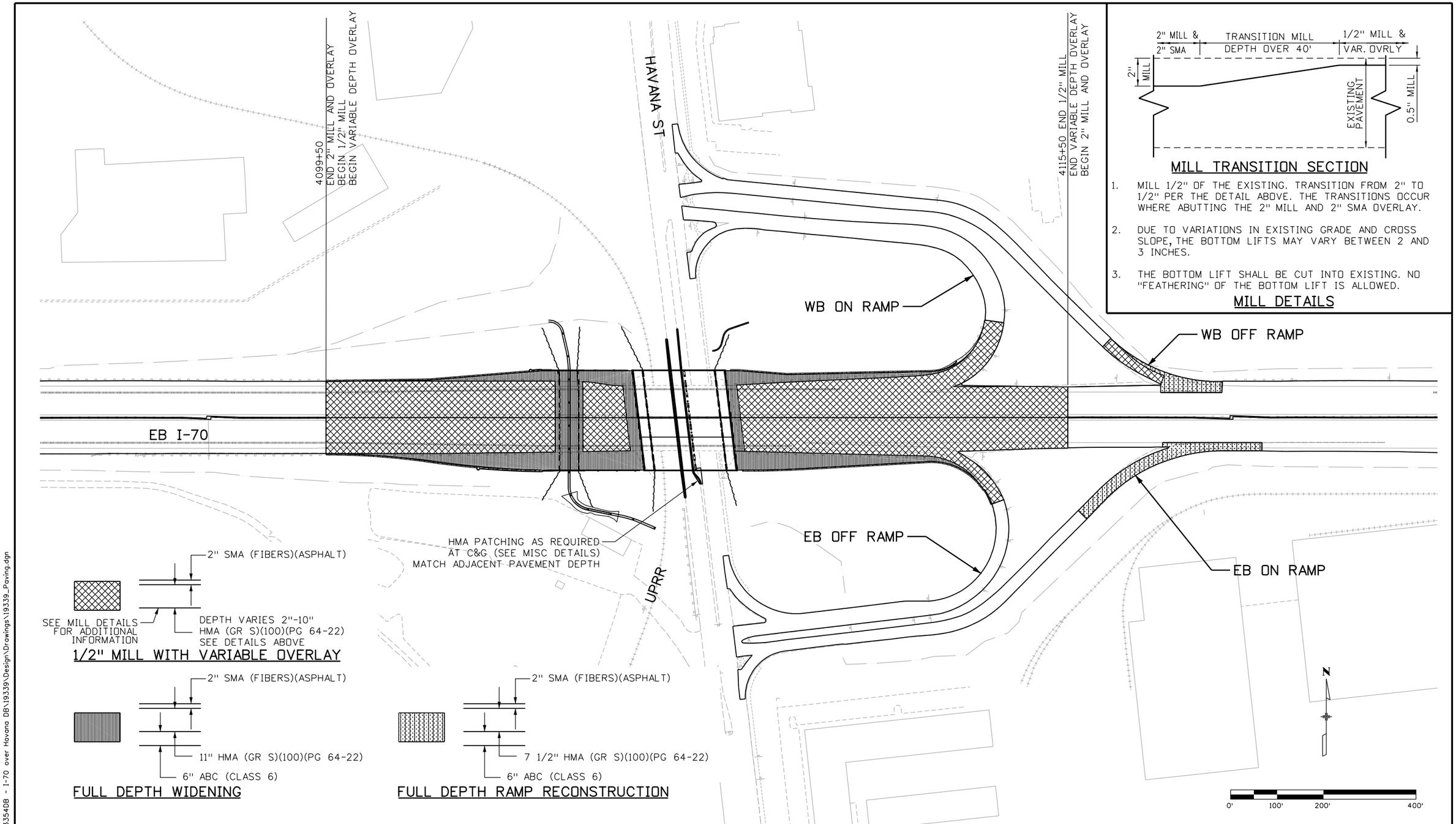

MILL TRANSITION SECTION

1. MILL 1/2" OF THE EXISTING. TRANSITION FROM 2" TO 1/2" PER THE DETAIL ABOVE. THE TRANSITIONS OCCUR WHERE ABUTTING THE 2" MILL AND 2" SMA OVERLAY.
2. DUE TO VARIATIONS IN EXISTING GRADE AND CROSS SLOPE, THE BOTTOM LIFTS MAY VARY BETWEEN 2 AND 3 INCHES.
3. THE BOTTOM LIFT SHALL BE CUT INTO EXISTING. NO "FEATHERING" OF THE BOTTOM LIFT IS ALLOWED.

MILL DETAILS

RFC02 JUNE, 2015 (REVIEW)

bob.harr 11:59:53 AM P:\1303354DB - I-70 over Havana DB\19339\Design\Drawings\19339_Paving.dgn

Print Date: 6/17/2015	Sheet Revisions	Colorado Department of Transportation	As Constructed
File Name: 19339_Paving.dgn	Date: / Comments / Init.	4670 N. Holly, Denver, CO 80216, Phone: 303-398-6767 FAX: 303-398-6781	No Revisions:
Horiz. Scale: 1:200 Vert. Scale: As Noted		Region 1 KK	Revised:
TSIOUVARAS SIMMONS HOLDERNESS CONSULTING ENGINEERS			Void:

I-70 OVER HAVANA STREET DESIGN-BUILD RECONSTRUCTION AREA PAVING PLAN				Project No./Code
Designer: R. HARR	Structure Numbers			FBR 0704-230
Detailer: R. HARR				19339
Sheet Subset: PAVE	Subset Sheets: 1 of 1			Sheet Number 35

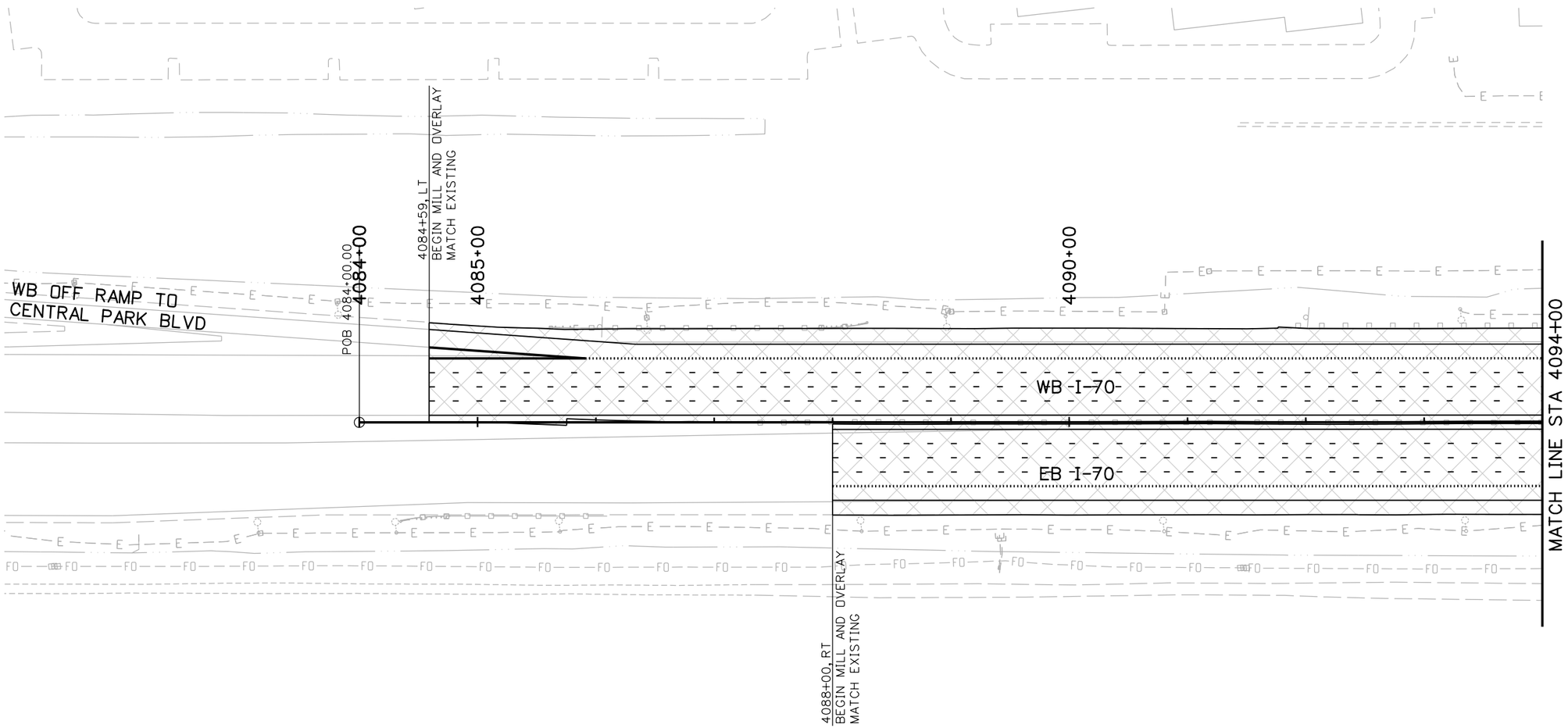

LEGEND

2" MILL
2" SMA OVERLAY

N

0' 50' 100' 200'

RFC02 JUNE, 2015 (REVIEW)

bob.harr 11:59:59 AM P:\1303354DB - I-70 over Havana DB\19339\Design\Drawings\19339_OvlyPlan.dgn

Print Date: 6/17/2015	Sheet Revisions		
File Name: 19339_OvlyPlan.dgn	Date:	Comments	Init.
Horiz. Scale: 1:100 Vert. Scale: As Noted			

LAWRENCE TSIOUVARAS SIMMONS HOLDERNESS
CONSULTING ENGINEERS

Colorado Department of Transportation
CDOT
4670 N. Holly
Denver, CO 80216
Phone: 303-398-6767 FAX: 303-398-6781
Region 1 KK

As Constructed
No Revisions:
Revised:
Void:

I-70 OVER HAVANA STREET DESIGN-BUILD
OVERLAY AREAS
PAVING PLAN

Designer: R. HARR
Detailer: R. HARR
Structure Numbers
Sheet Subset: OVLY
Subset Sheets: 1 of 3

Project No./Code
FBR 0704-230
19339
Sheet Number 36

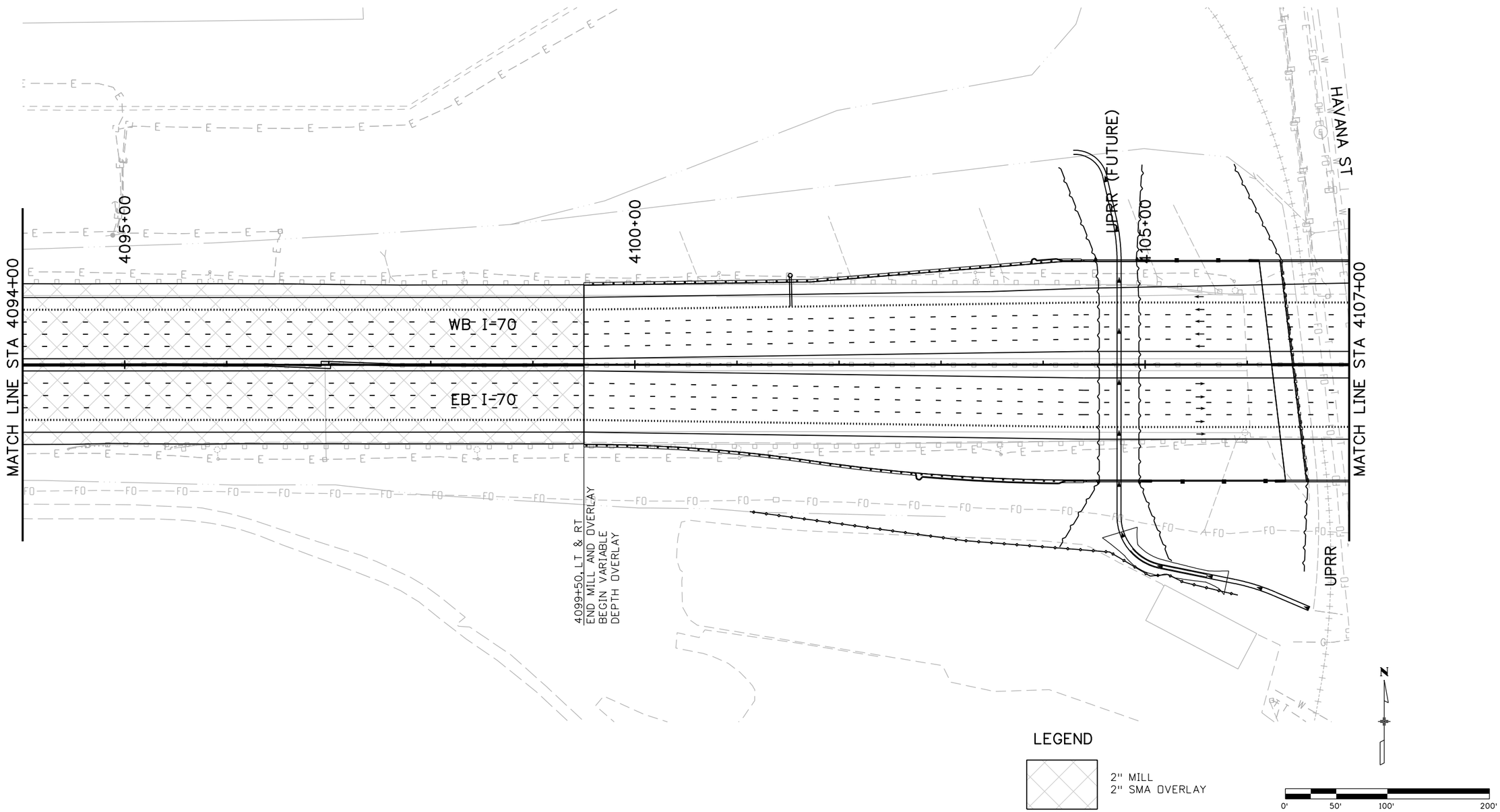

RFC02 JUNE, 2015 (REVIEW)

bob.harr 12:00:02 PM P:\13033540B - I-70 over Havana DB\19339\Design\Drawings\19339_OvlyPlan.dgn

Print Date: 6/17/2015
File Name: 19339_OvlyPlan.dgn
Horiz. Scale: 1:100 Vert. Scale: As Noted

LAWRENCE
TSIOUVARAS SIMMONS HOLDERNESS
CONSULTING ENGINEERS

Sheet Revisions		
Date:	Comments	Init.

Colorado Department of Transportation
CDOT
4670 N. Holly
Denver, CO 80216
Phone: 303-398-6767 FAX: 303-398-6781
Region 1 KK

As Constructed
No Revisions:
Revised:
Void:

I-70 OVER HAVANA STREET DESIGN-BUILD
OVERLAY AREAS
PAVING PLAN

Designer:
Detailer:
Structure Numbers
Sheet Subset: OVLY
Subset Sheets: 2 of 3

Project No./Code
FBR 0704-230
19339
Sheet Number 37

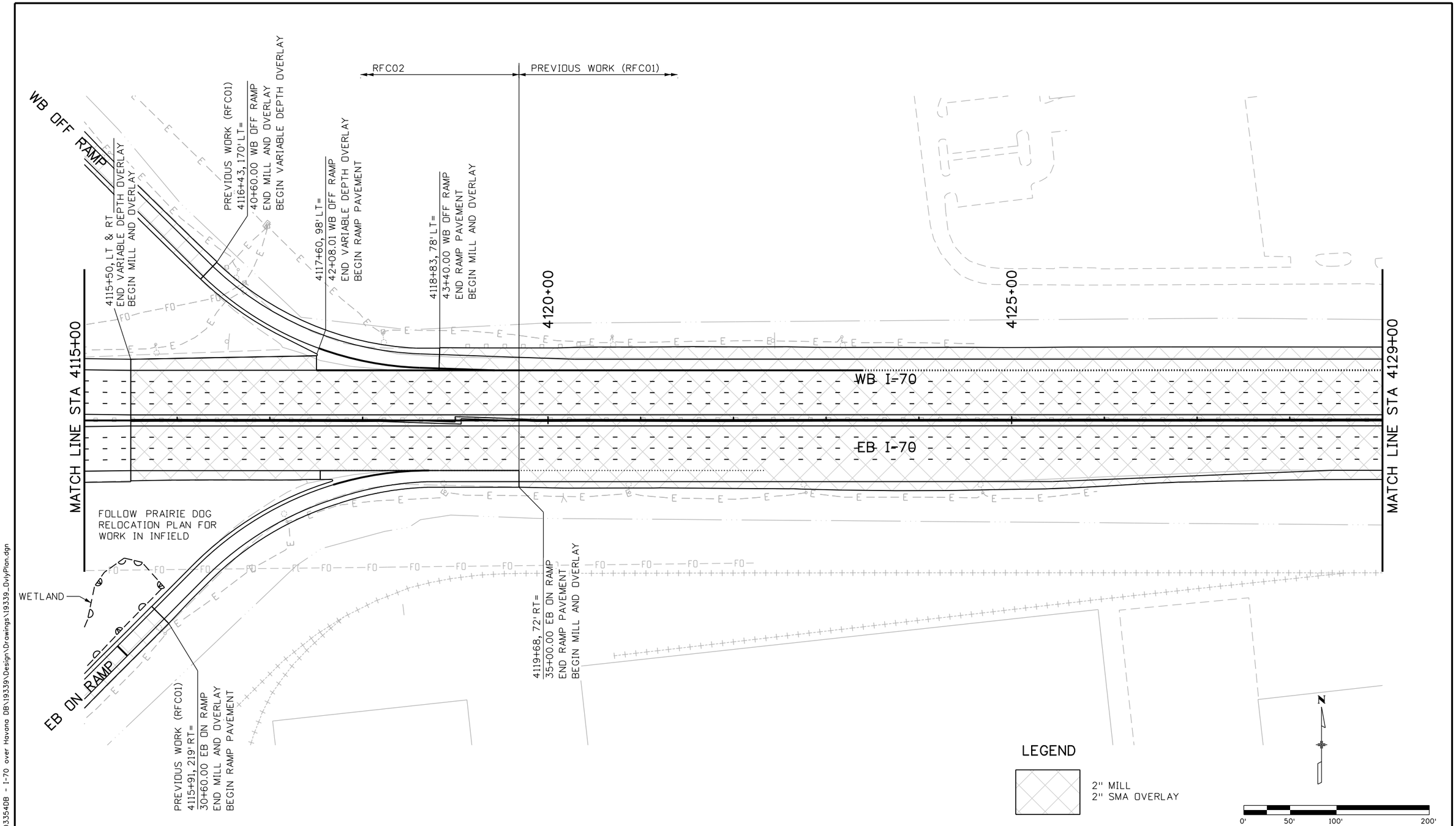

RFC02 JUNE, 2015 (REVIEW)

bob.harr 12:00:06 PM P:\1303354DB - I-70 over Havana DB\19339\Design\Drawings\19339_OvlyPlan.dgn

Print Date: 6/17/2015	Sheet Revisions	Colorado Department of Transportation	As Constructed
File Name: 19339_OvlyPlan.dgn	Date: / Comments / Init.	4670 N. Holly, Denver, CO 80216, Phone: 303-398-6767 FAX: 303-398-6781	No Revisions:
Horiz. Scale: 1:100 Vert. Scale: As Noted		Region 1 KK	Revised:
LAWRENCE TSIOUVARAS SIMMONS HOLDERNESS CONSULTING ENGINEERS			Void:

I-70 OVER HAVANA STREET DESIGN-BUILD OVERLAY AREAS PAVING PLAN				Project No./Code
Designer:	R. HARR	Structure Numbers		FBR 0704-230
Detailer:	R. HARR			19339
Sheet Subset:	OVLY	Subset Sheets:	3 of 3	Sheet Number 38

GENERAL NOTES

All work shall be done in accordance with the Colorado Department of Transportation 2011 Standards for Roadway and Bridge Construction and the contract documents.

Structure excavation and backfill shall be as shown on the plans, except shoring is required for excavation adjacent to the existing roadway.

Expansion joint material shall meet AASHTO Specification M213.

A colored structural concrete coating finish will be required, as shown on the plans, on exposed concrete surfaces. The color shall be as shown on the "Typical Section" sheet, and shall be selected from test panels provided by the Contractor.

The following structural steel shall be AASHTO M270 Grade 50 (ASTM A-572): Piling.

Leveling pads are unlaminated bearings. They shall be cut or molded from AASHTO elastomer grade 3, 4, or 5 as described in tables 705-1 and 705-2 with a durometer (shore "A") hardness of 60.

Grade 60 reinforcing steel is required.

All reinforcing steel shall be epoxy coated unless otherwise noted.

(N) denotes non coated reinforcing steel.

All the provisions for bridge deck concrete shall also apply to approach slab concrete.

An emergency deck construction joint may be located at the one quarter span point back from a pier or end bent with respect to the direction of the deck placement.

The following table gives the minimum staggered lap splice length for epoxy coated reinforcing bars placed in accordance with Subsection 602.06. These splice lengths shall be increased by 25% for bars spaced at less than 6" on center or less than 3" lateral cover.

Bar size	#4	#5	#6	#7	#8	#9	#10	#11
Splice length for Class D concrete	1'-3"	1'-7"	2'-5"	2'-10"	3'-8"	4'-8"	5'-11"	7'-3"

When the Contractor elects to substitute epoxy coated reinforcement for black reinforcing bars, the minimum lap splice shall be as described above.

The following table gives the minimum staggered lap splice length for black reinforcing bars placed in accordance with Subsection 602.06. These splice lengths shall be increased by 25% for bars spaced at less than 6" on center or less than 3" lateral cover.

Bar size	#4	#5	#6	#7	#8	#9	#10	#11
Splice length for Class D concrete	1'-1"	1'-4"	1'-7"	1'-11"	2'-6"	3'-1"	3'-11"	4'-10"

The above splice lengths shall be increased by 20 percent for 3 bar bundles and 33 percent for 4 bar bundles.

The Contractor shall be responsible for the stability of the structure during construction.

Permanent Deck Forms are not allowed.

For structure number installation, see Standard S-614-12.

Stations, Elevations, and Dimensions contained in these plans are calculated from a recent field survey. The Contractor shall verify all dependent dimensions in the field before ordering or fabricating any material.

All longitudinal and transverse dimensions are measured horizontally and include no correction for grade.

The information shown on these plans concerning the type and location of underground utilities is not guaranteed to be accurate or all inclusive. The Contractor is responsible for making his own determination as to the type and location of underground utilities as may be necessary to avoid damage thereto. The Contractor shall contact the Utility Notification Center of Colorado at 811 (1-800-922-1987) at least 3 days (2 days not including the day of notification) prior to any excavation or other earthwork.

Call the following number at least 48 hours prior to commencing work to determine location of fiber optic: UPRR "Call Before You Dig", 1-800-336-9193.

Coal tar epoxy coating for piling shall be Carboline Bitumastic 300M or Sherwin Williams Targuard Coal Tar Epoxy. Application of coal tar epoxy shall comply with manufacturer's recommendations.

Hydrophilic Waterstop called out in plans at B.F. End Bent caps and approach slabs shall be Greenstreak Hydrotite or Greenstreak Leakmaster LV-1. Installation of waterstop shall comply with manufacturer's recommendations.

DESIGN DATA

AASHTO, Sixth Edition LRFD, with Interims through 2013

Design Method: Load and Resistance Factor Design

Live load: HL-93 (design truck or tandem, and design lane load)
Dead load: Assumes 36 lbs. per sq. ft. for bridge deck overlay
Bridge rail allowance is 500 lbs. per linear ft. per side

Reinforced Concrete:
Class D Concrete: f'c = 4,500 psi
Reinforcing Steel: fy = 60,000 psi
Sulfate Exposure: Class 0

Precast Prestressed Concrete:
Class PS Concrete: f'c = (see details)
f's = 270,000 psi

SEISMIC DESIGN CRITERIA

Earthquake Design Method: Uniform Load Method
Latitude = 39.775743
Longitude = -104.865838

AASHTO Spectrum for 7% PE in 75 years (1000yr Return Period)

Period (sec)	Sa (g)
0.0	0.056 PGA - Site Class B
0.2	0.120 Ss - Site Class B
1.0	0.033 S1 - Site Class B

Spectral Response Accelerations:
As = Fpga*PGA, SDs = Fa*Ss, and SD1 = Fv*S1
Fpga = 1.6, Fa = 1.6, Fv = 2.4

Period (sec)	Sa (g)
0.0	0.089 As - Site Class D
0.2	0.192 SDs - Site Class D
1.0	0.079 SD1 - Site Class D

Operational Class: Essential

Seismic Zone: Zone= 1

BRIDGE DESCRIPTION

2 span (89'-0", 66'-0") bridge
concrete prestressed box girder continuous (precast)
over Havana Street and UPRR Arsenal Industrial Lead Track
214'-4" roadway width curb to curb
83° 10' 25" skew
1'-6" Bridge Rail Type 7 with Fence Chain Link (Special) (each edge)
and Guardrail Type 7 Style CA

ABBREVIATIONS

Ah. = ahead
B.F. = back face
Bk. = back
Bot. = bottom
Brg. = bearing
C.G. = center of gravity
C&G = curb and gutter
℄ = center line
Clr. = clear
CMP = corrugated metal pipe
Const. = construction
Cont. = continuous
EB = East bound
E.F. = each face
Elev. = elevation
Embed. = embedment
Eq. = equally
Est. = estimated
Exist. = existing
Exp. = expansion
Galv. = galvanized
GR = grade
HCL = horizontal control line
SMA = stone matrix asphalt
JCT = junction
Jt. = joint
Max. = maximum
Min. = minimum
MP = mile post
MSE = mechanically stabilized earth
NB = North bound
No. = number
Nom. = nominal
PGL = profile grade line
PL = plate
Proj. = projection
SB = south bound
Shld. = shoulder
Spa. = spaced
Sta. = station
Std. = standard
Str. = structure
typ. = typical
UPRR = Union Pacific Railroad
VC = vertical curve
VPI = vertical point of intersection
WB = West bound

INDEX OF DRAWINGS

B1 GENERAL INFORMATION (1 OF 2)
B2 GENERAL INFORMATION (2 OF 2)
B3 SUMMARY OF QUANTITIES
B4 GENERAL LAYOUT
B5 TYPICAL SECTION
B6 ENGINEERING GEOLOGY - EASTBOUND I-70
B7 ENGINEERING GEOLOGY - WESTBOUND I-70
B8 ENGINEERING GEOLOGY - SUMMARY OF TEST RESULTS
B9 PHASING PLAN
B10 PHASING SECTIONS
B11 CONSTRUCTION LAYOUT (1 OF 2)
B12 CONSTRUCTION LAYOUT (2 OF 2)
B13 FOUNDATION LAYOUT (1 OF 2)
B14 FOUNDATION LAYOUT (2 OF 2)
B15 FOUNDATION DETAILS
B16 END BENT 1 PLAN AND ELEVATION (1 OF 2)
B17 END BENT 1 PLAN AND ELEVATION (2 OF 2)
B18 END BENT 3 PLAN AND ELEVATION (1 OF 2)
B19 END BENT 3 PLAN AND ELEVATION (2 OF 2)
B20 END BENT 1 DETAILS (1 OF 2)
B21 END BENT 1 DETAILS (2 OF 2)
B22 END BENT 3 DETAILS (1 OF 2)
B23 END BENT 3 DETAILS (2 OF 2)
B24 END BENT COMMON DETAILS (1 OF 2)
B25 END BENT COMMON DETAILS (2 OF 2)
B26 PIER 2 PLAN AND ELEVATION (1 OF 2)
B27 PIER 2 PLAN AND ELEVATION (2 OF 2)
B28 PIER 2 DETAILS (1 OF 2)
B29 PIER 2 DETAILS (2 OF 2)
B30 PRECAST CONCRETE BOX GIRDER
B31 DECK REINFORCING PLAN (1 OF 2)
B32 DECK REINFORCING PLAN (2 OF 2)
B33 DECK REINFORCING SECTION
B34 BRIDGE RAIL TYPE 7 (1 OF 2)
B35 BRIDGE RAIL TYPE 7 (2 OF 2)
B36 FENCE CHAIN LINK (SPECIAL) (1 OF 2)
B37 FENCE CHAIN LINK (SPECIAL) (1 OF 2)
B38 APPROACH SLAB DETAILS
B39 BRIDGE DECK ELEVATIONS (1 OF 7)
B40 BRIDGE DECK ELEVATIONS (2 OF 7)
B41 BRIDGE DECK ELEVATIONS (3 OF 7)
B42 BRIDGE DECK ELEVATIONS (4 OF 7)
B43 BRIDGE DECK ELEVATIONS (5 OF 7)
B44 BRIDGE DECK ELEVATIONS (6 OF 7)
B45 BRIDGE DECK ELEVATIONS (7 OF 7)

LEGEND

XX / BXX — Section or Detail Identification; Cross reference drawing number (if blank, reference is to same sheet)

1 — Denotes keynote reference

Know what's below. Call before you dig.

RFC02 JUNE, 2015 (REVIEW)

Design	INITIAL	DATE	Detail	INITIAL	DATE	Quantities	INITIAL	DATE
Designed By	CCH	05/15	Detailed By	MJW	05/15	Quantities By	JWG	05/15
Checked By	MAG	05/15	Checked By	CCH	05/15	Checked By	CCH	05/15

isaiah.quintana
6/29/2015 5:59:09 PM
DGN MODEL:sheet
P:\1303354DB - I-70 over Havana DB\19339\Bridge\Drawings\19339BRDG_B101-GenInfo01.dgn

Print Date: 6/29/2015
File Name: 19339BRDG_B101-GenInfo01.dgn
Horiz. Scale: None Vert. Scale: None
Staff Bridge Branch - Unit 0224 AJP
TSIOUVARAS SIMMONS HOLDERNESS

Sheet Revisions		
Date:	Comments	Init.

Colorado Department of Transportation
4670 N. Holly
Denver, CO 80216
Phone: 303-398-6767 FAX: 303-398-6781
Region 1 KK

As Constructed
No Revisions:
Revised:
Void:

I-70 OVER HAVANA STREET DESIGN-BUILD
I-70 BRIDGE OVER HAVANA
GENERAL INFORMATION (1 OF 2)

Designer: C. Hammond | Structure Numbers: E-17-VD
Detailer: M. Welch
Sheet Subset: Bridge 1 | Subset Sheets: B1 of 45
Near: Denver Sec. 22 & 23 Township T3S Range R67W

Project No./Code
FBR 0704-230
19339
Sheet Number 39
Station 4106+43.92 to Station 4108+01.95

RAILROAD CONSTRUCTION NOTES

Any shoring system that impacts the railroad's operation and/or supports the railroad's embankment shall be designed and constructed per "Railroad Guidelines for Temporary Shoring".

All demolition within the railroad's right-of-way, and/or demolition that may impact the railroad's tracks or operations, shall comply with the railroad's demolition requirements.

Erection over the railroad's track shall be planned such that it enables the track to remain open to traffic per railroad requirements.

The elevation of the existing top of rail profile shall be verified before beginning construction. All discrepancies shall be brought to the attention of the railroad prior to construction.

The proposed grade separation project shall not change the quantity and/or characteristics of the flow in the railroad ditches and/or drainage structures.

See SWMP for proposed method of erosion and sediment control.

For railroad coordination, refer to the railroad's coordination requirements as part of the specifications or project special provisions.

Temporary construction clearances, including falsework clearances, shall comply with "Minimum Construction Clearance Envelope", this sheet.

All permanent clearances shall be verified before project closeout.

The railroad's review and approval of shoring, erection, and falsework are required. Allow minimum of four weeks for the review and approval of each round of submittal.

Railroad requirements do not allow work within 50 feet of track centerline while a train passes the work site, and all personnel must clear the area within 25 feet of the track centerline and secure all equipment.

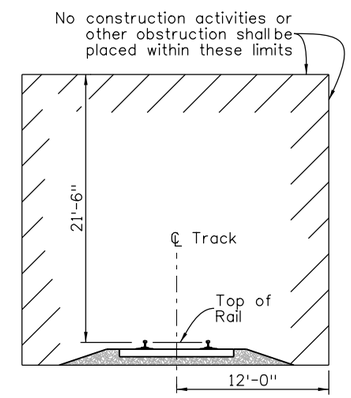

MINIMUM CONSTRUCTION CLEARANCE ENVELOPE

(Normal to ℄ Track)

Design			Detail			Quantities		
	INITIAL	DATE		INITIAL	DATE		INITIAL	DATE
Designed By	CCH	05/15	Detailed By	MJW	05/15	Quantities By	JWG	05/15
Checked By	MAG	05/15	Checked By	CCH	05/15	Checked By	CCH	05/15

P:\1303354DB - I-70 over Havana DB\19339\Bridge\Drawings\19339BRDG_B102-GenInfo02.dgn
DGN MODEL:sheet
6/29/2015 5:59:11 PM
isaiah.quintana

Print Date: 6/29/2015
File Name: 19339BRDG_B102-GenInfo02.dgn
Horiz. Scale: None Vert. Scale: None
Staff Bridge Branch - Unit 0224 AJP

TSIOUVARAS SIMMONS HOLDERNESS

Sheet Revisions		
Date:	Comments	Init.

Colorado Department of Transportation
4670 N. Holly
Denver, CO 80216
Phone: 303-398-6767 FAX: 303-398-6781
Region 1 KK

As Constructed
No Revisions:
Revised:
Void:

I-70 OVER HAVANA STREET DESIGN-BUILD
I-70 BRIDGE OVER HAVANA
GENERAL INFORMATION (2 OF 2)

Designer: C. Hammond
Detailer: M. Welch
Structure Numbers: E-17-VD
Sheet Subset: Bridge 1
Subset Sheets: B2 of 45

Project No./Code
FBR 0704-230
19339
Sheet Number 40

RFC02 JUNE, 2015 (REVIEW)

SUMMARY OF QUANTITIES

ITEM NO.	DESCRIPTION	UNIT	SUPER-STRUCTURE	END BENT 1 APPROACH SLAB	END BENT 1	PIER 2	END BENT 3	END BENT 3 APPROACH SLAB	TOTAL
403-09210	STONE MATRIX ASPHALT	TON	606	80				80	766
502-11274	STEEL PILING (HP 12X74)	LF			1,584		1,554		3,138
502-14117	STEEL PILING (HP 14X117)	LF				1,808			1,808
515-00120	WATERPROOFING (MEMBRANE)	SY	3,738	489				489	4,716
601-03040	CONCRETE CLASS D (BRIDGE)	CY	647	198	306	284	355	198	1,988
601-40400	STRUCTURAL CONCRETE STAIN	SY	3,995		885	849	677		6,406
602-00020	REINFORCING STEEL (EPOXY COATED)	LB	290,494	30,615	77,076	74,222	70,844	30,615	573,866
606-00718	GUARDRAIL TYPE 7 (STYLE CA)	LF	198						198
606-10705	BRIDGE RAIL TYPE 7 (SPECIAL)	LF	318	42				62	422
607-53005	FENCE CHAIN LINK (SPECIAL)	LF	100						100
613-00200	2 INCH ELECTRICAL CONDUIT	LF	636	124				124	884
613-00400	4 INCH ELECTRICAL CONDUIT	LF	198						198
618-01992	PRESTRESSED CONCRETE BOX (DEPTH LESS THAN 32 INCHES)	SF	33,041						33,041

Design			Detail			Quantities		
	INITIAL	DATE		INITIAL	DATE		INITIAL	DATE
Designed By	CCH	05/15	Detailed By	MJW	05/15	Quantities By	JWG	05/15
Checked By	MAG	05/15	Checked By	CCH	05/15	Checked By	CCH	05/15

P:\130335408 - I-70 over Havana DB\19339\Bridge\Drawings\19339BRDG_B103-SummQuan.dgn
isaiah.quintana
6/29/2015 5:59:13 PM
DGN MODEL:sheet

Print Date: 6/29/2015
File Name: 19339BRDG_B103-SummQuan.dgn
Horiz. Scale: None Vert. Scale: None
Staff Bridge Branch - Unit 0224 AJP

TSIOUVARAS SIMMONS HOLDERNESS

Sheet Revisions		
Date:	Comments	Init.

Colorado Department of Transportation
4670 N. Holly
Denver, CO 80216
Phone: 303-398-6767 FAX: 303-398-6781
Region 1 KK

As Constructed
No Revisions:
Revised:
Void:

I-70 OVER HAVANA STREET DESIGN-BUILD
I-70 BRIDGE OVER HAVANA
SUMMARY OF QUANTITIES

Designer: C. Hammond
Detailer: M. Welch
Sheet Subset: Bridge 1
Structure Numbers: E-17-VD
Subset Sheets: B3 of 45

Project No./Code
FBR 0704-230
19339
Sheet Number 41

RFC02 JUNE, 2015 (REVIEW)

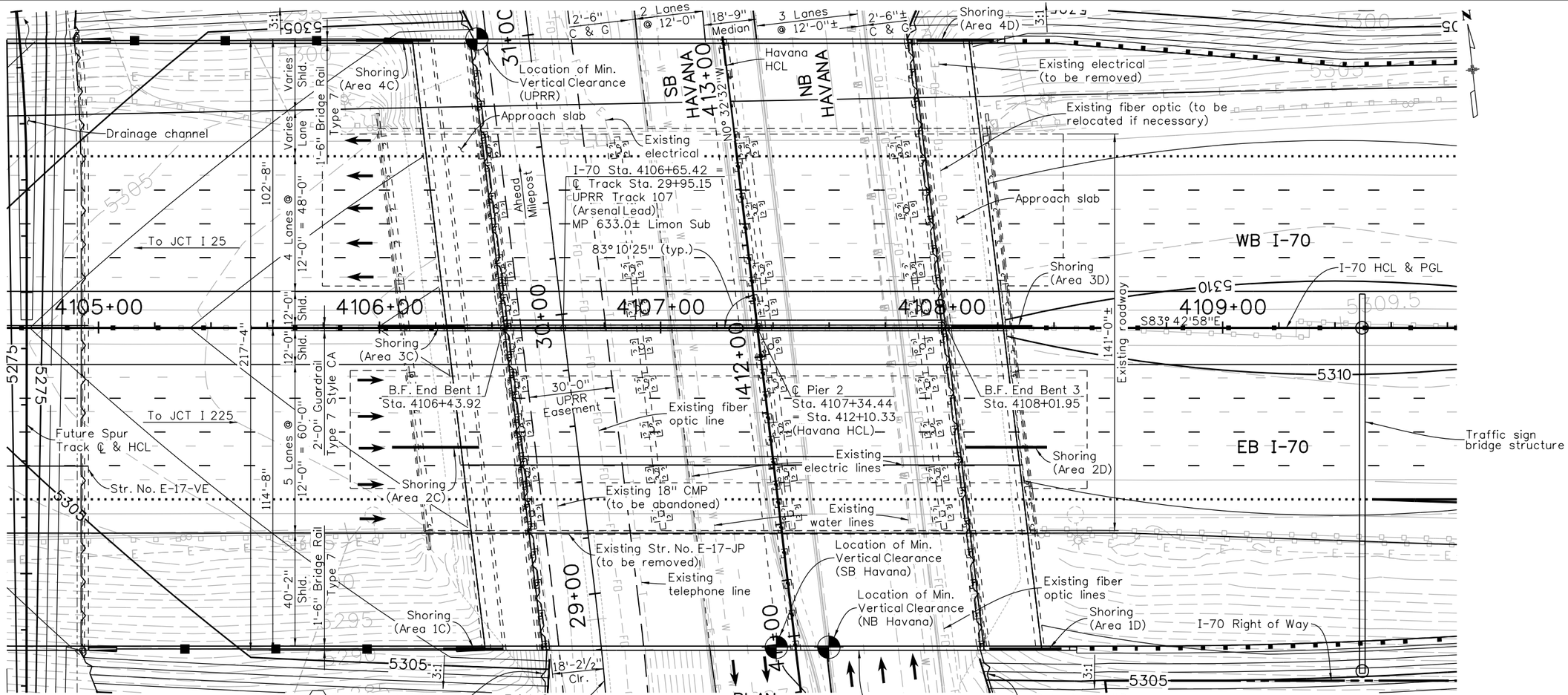

NOTE

1. Utilities shown are schematic only and may not represent actual size or location.

KEY NOTES

1. Permanent UPRR Clearance Zone, measured normal to ℄ Existing Spur Track.
2. 50 linear feet of Fence Chain Link (Special) centered over ℄ Existing Spur Track.
3. See "RETAINING WALL PLANS" for limits of wall numbers.

Design	INITIAL	DATE	Detail	INITIAL	DATE	Quantities	INITIAL	DATE
Designed By	CCH	05/15	Detailed By	MJW	05/15	Quantities By	JWG	05/15
Checked By	MAG	05/15	Checked By	CCH	05/15	Checked By	CCH	05/15

isaiah.quintana
6/29/2015 5:59:15 PM
DGN MODEL:sheet
P:\1303354DB - I-70 over Havana DB\19339\Bridge\Drawings\19339BRDG_B104-GenLay.dgn

RFC02 JUNE, 2015 (REVIEW)

Print Date: 6/29/2015
File Name: 19339BRDG_B104-GenLay.dgn
Horiz. Scale: None Vert. Scale: None
Staff Bridge Branch - Unit 0224 AJP

TSIOUVARAS SIMMONS HOLDERNESS

Sheet Revisions		
Date:	Comments	Init.

Colorado Department of Transportation
4670 N. Holly
Denver, CO 80216
Phone: 303-398-6767 FAX: 303-398-6781
Region 1 KK

As Constructed
No Revisions:
Revised:
Void:

I-70 OVER HAVANA STREET DESIGN-BUILD
I-70 BRIDGE OVER HAVANA
GENERAL LAYOUT

Designer: C. Hammond
Detailer: A. Pelster
Structure Numbers: E-17-VD
Sheet Subset: Bridge 1
Subset Sheets: B4 of 45

Project No./Code
FBR 0704-230
19339
Sheet Number 42

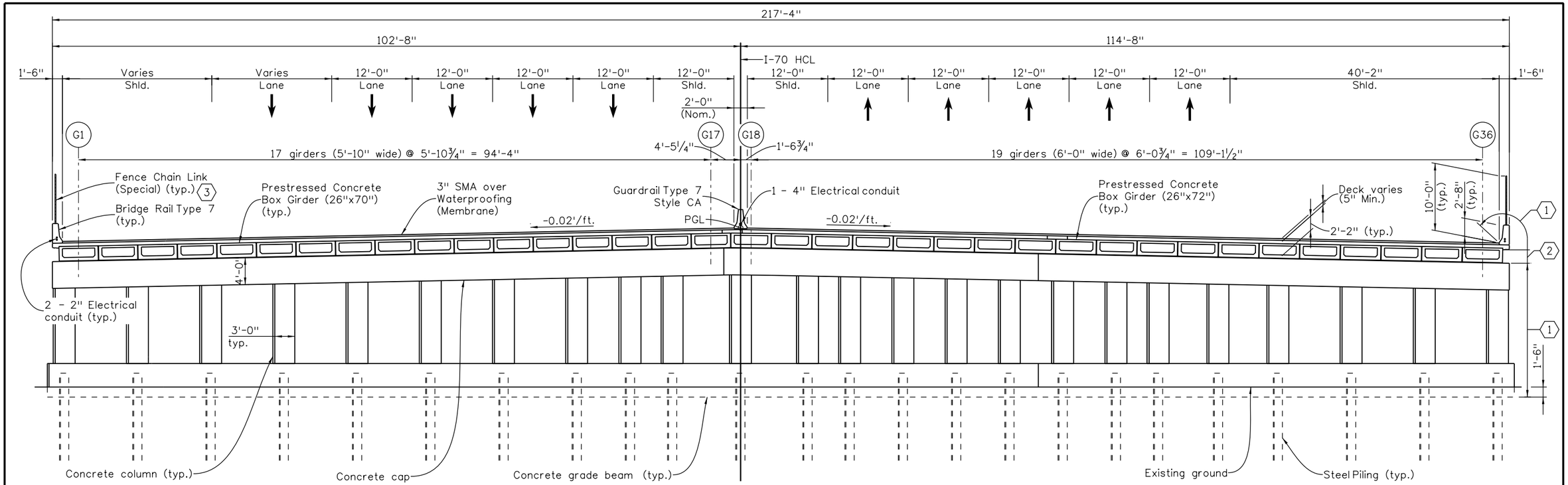

TYPICAL SECTION

(Looking Ahead Station) (Pier 2 shown, End Bents similar)
(Normal to I-70 HCL, except as noted)

KEY NOTES

1. Limits of structural concrete coating - Federal Standard 595B Color Number 33531 - Light Beige (all exposed faces of end bents and pier, bridge rail, and portions of the deck) Coating shall extend 1'-6" below finished ground.
2. Limits of structural concrete coating - Federal Standard 595B Color Number 30108 - Dark Brown (all exposed faces of concrete girders)
3. 50 linear feet of fence centered over ℄ Existing Spur Track.
4. Track profile is taken at high rail. Profile is based on a recent field survey.

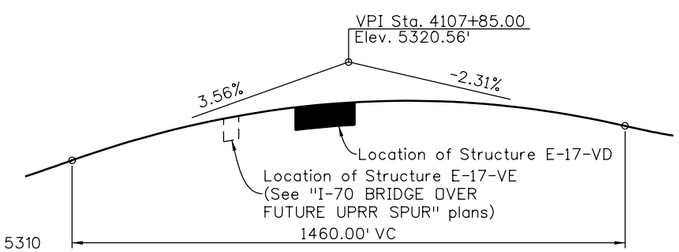

PROFILE GRADE - I-70 HCL

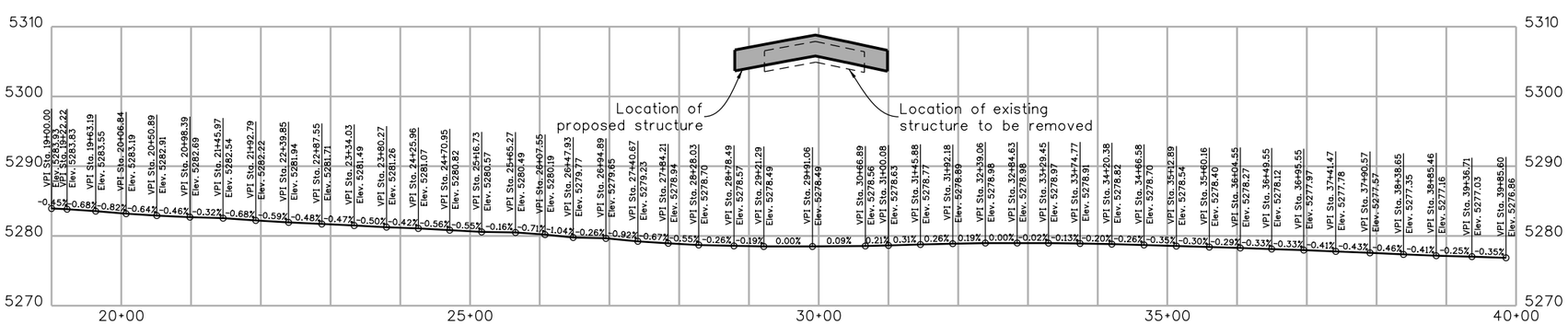

PROFILE GRADE - EXISTING UPRR TRACK 4

NOTES

1. Existing UPRR Track Station 30+00 is approximately equal to UPRR Milepost 633.0. Stations increase in direction of increasing UPRR mileposts.

Design	INITIAL	DATE
Designed By	CCH	05/15
Checked By	MAG	05/15

Detail	INITIAL	DATE
Detailed By	MJW	05/15
Checked By	CCH	05/15

Quantities	INITIAL	DATE
Quantities By	JWG	05/15
Checked By	CCH	05/15

RFC02 JUNE, 2015 (REVIEW)

P:\1303354DB - I-70 over Havana DB\19339\Bridge\Drawings\19339BRDG_B105-TypSect.dgn
DGN MODEL:sheet
6/29/2015 5:59:17 PM
isaiah.quintana

Print Date: 6/29/2015
File Name: 19339BRDG_B105-TypSect.dgn
Horiz. Scale: None Vert. Scale: None
Staff Bridge Branch - Unit 0224 AJP

TSIOUVARAS SIMMONS HOLDERNESS

Sheet Revisions		
Date:	Comments	Init.

Colorado Department of Transportation
4670 N. Holly
Denver, CO 80216
Phone: 303-398-6767 FAX: 303-398-6781
Region 1 KK

As Constructed
No Revisions:
Revised:
Void:

I-70 OVER HAVANA STREET DESIGN-BUILD
I-70 BRIDGE OVER HAVANA
TYPICAL SECTION

Designer: C. Hammond
Detailer: A. Pelster
Structure Numbers: E-17-VD
Sheet Subset: Bridge 1
Subset Sheets: B5 of 45

Project No./Code
FBR 0704-230
19339
Sheet Number 43

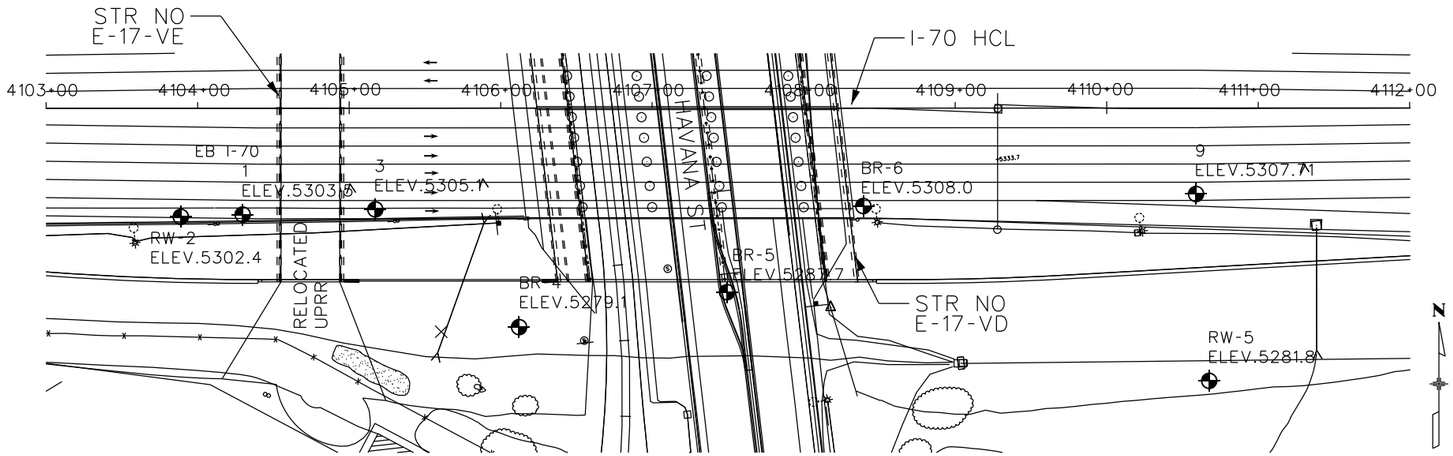

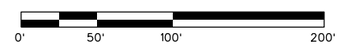

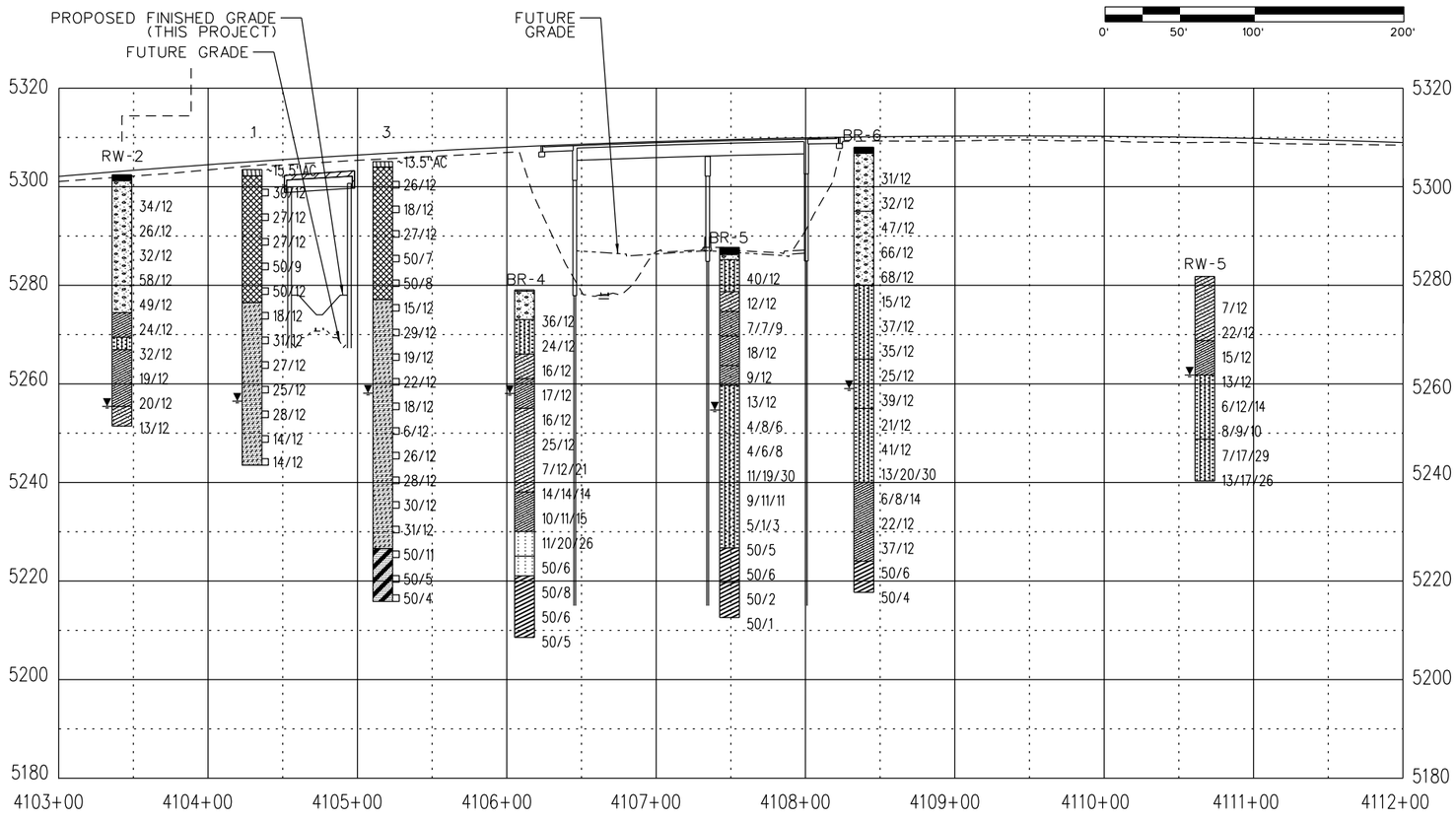

TYPE OF MATERIAL

- Asphalt
- Concrete
- Fill
- Sand and Clay
- Sandstone and Claystone Bedrock
- **Concrete**
- **Asphalt Pavement**
- **Fill - CLAY**
- **Fill - SAND**
- **FIII - SAND**
- **Native - TOPSOIL**
- **Native - SAND, clayey**
- **Natlve - SAND, sllty**
- **Native - CLAY, sandy**
- **Bedrock - CLAYSTONE**
- **Bedrock - SILTSTONE**
- **Bedrock - SANDSTONE**

LEGEND

	Drive sample, 2-inch I.D. California liner sample
	Small disturbed sample
23/12	Drive sample blow count, indicates 23 blows of a 140-pound hammer falling 30 inches were required to drive the sampler 12 inches.
10/11/15	5,5,5 Indicates 5 blows, 5 blows, 5 blows of a 140 pound hammer falling 30 inches was required to drive the sampler 18 inches.
	Caved Hole - depth at which the hole began to cave-in utilizing 4-inch diameter augers.
	GROUND WATER LEVEL NOTED AT THE TIME OF DRILLING

RFC02 JUNE, 2015 (REVIEW)

Print Date: $DATE$
File Name: $FILES$
Horiz. Scale: $SCALESHORT$ Vert. Scale: As Noted

LAWRENCE
TSIOUVARAS SIMMONS HOLDERNESS
CONSULTING ENGINEERS

Sheet Revisions

Date:	Comments	Init.

Colorado Department of Transportation
CDOT
4670 N. Holly
Denver, CO 80216
Phone: FAX: 303-398-6781
Region 1 KK

As Constructed
No Revisions:
Revised:
Void:

I-70 OVER HAVANA STREET DESIGN-BUILD
ENGINEERING GEOLOGY
EASTBOUND I-70

Designer:	HH.Chiang	Structure Numbers	E-17-VD
Detailer:	A.Crandall		E-17-VE
Sheet Subset:	Bridge 1	Subset Sheets:	B6 of 45

FBR 0704-230
19339
Sheet Number 44

$PLOT_INFO$

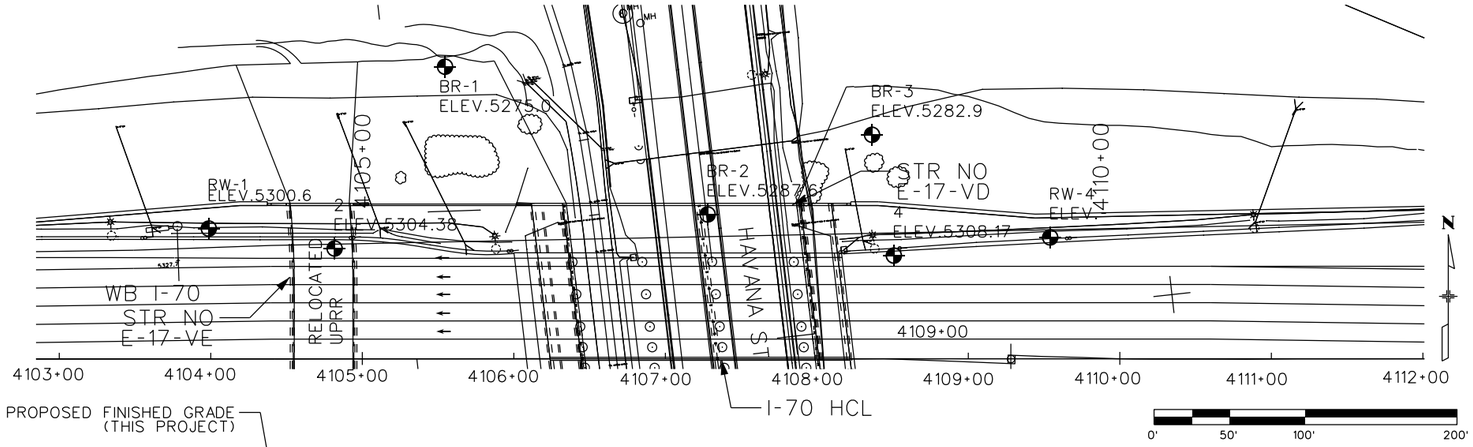

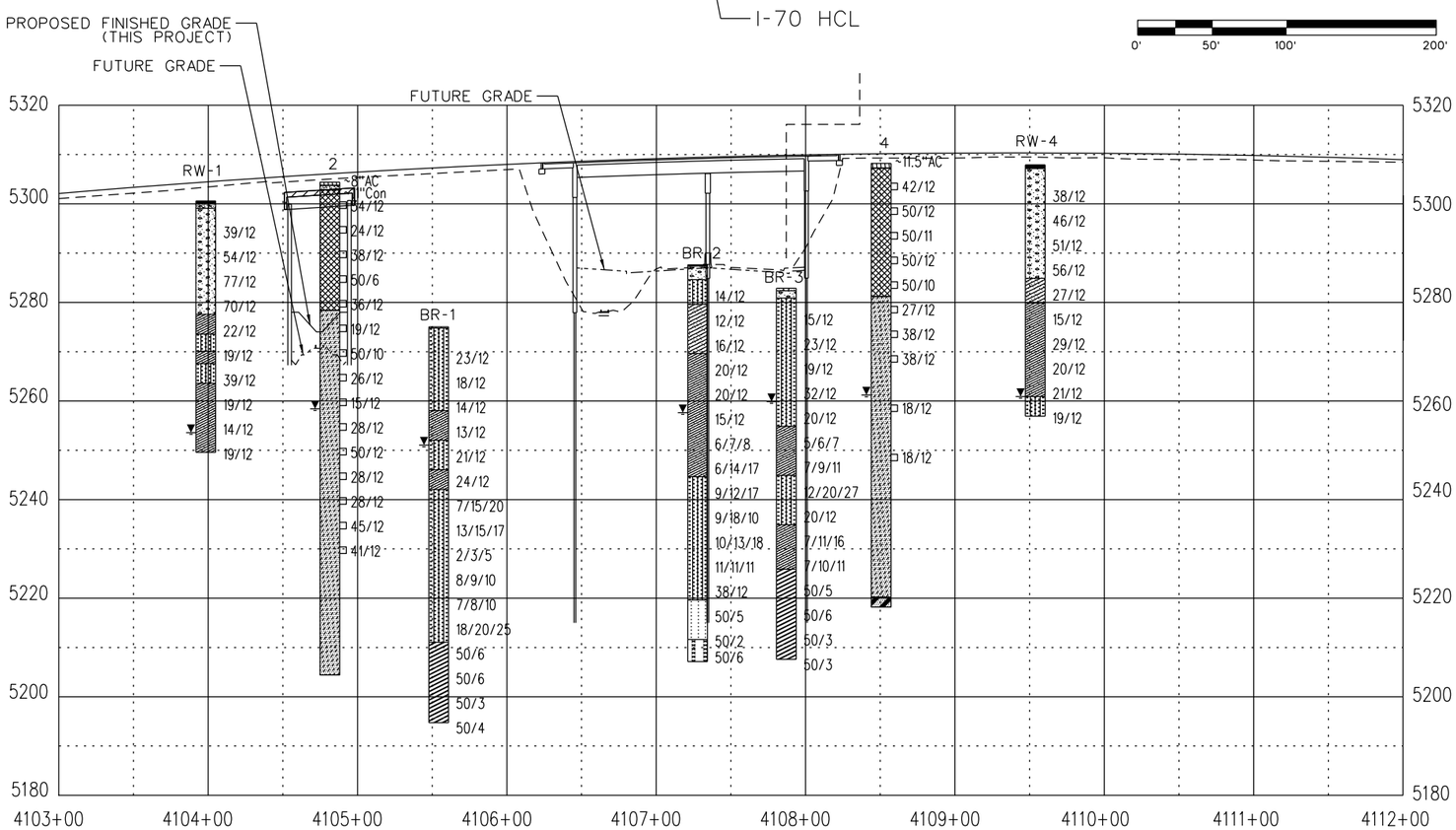

TYPE OF MATERIAL

- Asphalt
- Concrete
- Fill
- Sand and Clay
- Sandstone and Claystone Bedrock
- **Concrete**
- **Asphalt Pavement**
- **Fill - CLAY**
- **Fill - SAND**
- **Fill - SAND**
- **Native - TOPSOIL**
- **Natlve - SAND, clayey**
- **Native - SAND, silty**
- **Native - CLAY, sandy**
- **Bedrock - CLAYSTONE**
- **Bedrock - SILTSTONE**
- **Bedrock - SANDSTONE**

LEGEND

	Drive sample, 2-inch I.D. California liner sample
	Small disturbed sample
23/12	Drive sample blow count, indicates 23 blows of a 140-pound hammer falling 30 inches were required to drive the sampler 12 inches.
10/11/15	5,5,5 Indicates 5 blows, 5 blows, 5 blows of a 140 pound hammer falling 30 inches was required to drive the sampler 18 inches.
	Caved Hole - depth at which the hole began to cave-in utilizing 4-inch diameter augers.
	GROUND WATER LEVEL NOTED AT THE TIME OF DRILLING

RFC02 JUNE, 2015 (REVIEW)

Print Date: $DATE$
File Name: $FILES$
Horiz. Scale: $SCALESHORT$ Vert. Scale: As Noted

LAWRENCE
TSIOUVARAS SIMMONS HOLDERNESS
CONSULTING ENGINEERS

Sheet Revisions		
Date:	Comments	Init.

Colorado Department of Transportation
CDOT
4670 N. Holly
Denver, CO 80216
Phone:
FAX: 303-398-6781
Region 1
KK

As Constructed
No Revisions:
Revised:
Void:

I-70 OVER HAVANA STREET DESIGN-BUILD
ENGINEERING GEOLOGY
WESTBOUND I-70

Designer:	HH.Chiang	Structure Numbers	E-17-VD
Detailer:	A.Crandall		E-17-VE
Sheet Subset:	Bridge 1	Subset Sheets:	B7 of 45

FBR 0704-230
19339
Sheet Number 45

$PLOT_INFO$

EASTBOUND I-70 SUMMARY OF TEST RESULTS

Sample ID/ Test Hole No.	Depth (ft)	Natural Moisture Content (%)	Natural Dry Density (pcf)	Grading Analysis (AASHTO)			Atterberg Limits		Unconfined Compressive Strength (psf)	Sulfates (%)	Classification		Soil or Bedrock Type
				Gravel (%)	Sand (%)	Passing No.200 (%)	Liquid Limit	Plasticity Index			USCS	AASHTO	
1	4	13.2	121.2	-	-	45	24	9	-	-	SC	A-4(1)	Fill: Clayey SAND
1	19	44.2	104.8	0	94	6	NV	NP	-	-	SP-SM	A-2-4(0)	Fill: Poorly Graded SAND with Silt
1	24	8.9	110.9	0	82	18	NV	NP	-	-	SM	A-2-4(0)	Fill: Silty SAND
1	29	6.7	107.4	-	-	22	NV	NP	940	-	SM	A-2-4(0)	Silty SAND
1	39	24.3	89.7	-	-	69	46	22	-	-	CL	A-7-6(14)	Sandy Lean CLAY
3	9	13.9	114.4	0	54	46	24	6	-	-	SC-SM	A-4(0)	Fill: Clayey, Silty SAND
3	24	6.7	124.5	-	-	21	NV	NP	2,020	-	SM	A-2-4(0)	Fill: Silty SAND
3	29	12.3	115.3	0	49	51	25	7	-	-	CL-ML	A-4(1)	Sandy SILT/CLAY
3	34	2.0	108.2	-	-	7	20	6	-	-	SP-SC	A-2-4(0)	SAND with clay
3	49	28.8	93.1	2	28	70	43	21	-	-	CL	A-7-6(14)	Sandy CLAY
3	84	29.2	91.1	-	-	35	61	21	10,680	-	SM	A-7-5(2)	Silty SANDSTONE
3	89	22.7	94.8	-	-	43	58	23	13,460	-	SM	A-7-5(6)	Silty SANDSTONE
3	BULK	10.2*	122.3*	-	-	27	19	5	-	-	SC-SM	A-2-4(0)	Clayey/Silty SAND

Sample ID/ Test Hole No.	Depth (ft)	Natural Moisture Content (%)	Natural Dry Density (pcf)	Grading Analysis (AASHTO)			Atterberg Limits		Unconfined Compressive Strength (psf)	Sulfates (%)	Classification	
				Gravel (%)	Sand (%)	Passing No.200 (%)	Liquid Limit	Plasticity Index			USCS	AASHTO
BR-4	5	5.2	122.1	-	-	48	22	6	-	-	SC-SM	A-4(0)
BR-4	10	6.3	103.5	-	-	34	NP	NP	-	-	SM	A-2-4(0)
BR-4	20	21.3	108.4	-	-	56	32	17	-	-	CL	A-6(6)
BR-4	25	22.6	103.3	-	-	-	-	-	-	0.01	-	-
BR-4	30	20.1	110.4	-	-	32	28	5	-	-	SM	A-2-4(0)
BR-4	35	20.7	-	-	-	27	NP	NP	-	-	SM	A-2-4(0)
BR-4	45	25.8	-	-	-	50	-	-	-	-	-	-
BR-4	55	96.4	-	-	-	49	57	27	-	-	SM	A-7-5(10)
BR-4	60	-	-	-	-	97	57	31	-	-	CH	A-7-6(35)
BR-4	65	27.1	94.7	-	-	-	-	-	-	0.00	-	-
BR-5	5	9.1	119.1	-	-	22	NP	NP	-	-	SM	A-2-4(0)
BR-5	10	11.6	121.0	-	-	-	-	-	-	0.00	-	-
BR-5	15	18.6	-	-	-	56	49	36	-	-	CL	A-7-6(16)
BR-5	20	18.0	109.0	-	-	-	-	-	-	-	-	-
BR-5	25	26.0	98.2	-	-	56	44	48	-	-	CL	A-7-6(12)
BR-5	30	18.9	106.5	-	-	-	-	-	-	-	-	-

Sample ID/ Test Hole No.	Depth (ft)	Natural Moisture Content (%)	Natural Dry Density (pcf)	Grading Analysis (AASHTO)			Atterberg Limits		Unconfined Compressive Strength (psf)	Sulfates (%)	Classification	
				Gravel (%)	Sand (%)	Passing No.200 (%)	Liquid Limit	Plasticity Index			USCS	AASHTO
BR-5	40	24.7	-	-	-	41	30	16	-	-	SC	A-6(2)
BR-5	65	28.6	95.1	-	-	59	58	29	-	-	CH	A-7-6(15)
BR-5	70	27.5	-	-	-	-	-	-	-	-	-	-
BR-6	1.25-10	-	-	-	-	14	NP	NP	-	0.01	SM	A-1-b(0)
BR-6	10	9.0	114.6	-	-	-	-	-	-	-	-	-
BR-6	20	6.6	115.7	-	-	-	-	-	-	-	-	-
BR-6	30	6.6	112.7	-	-	-	-	-	-	-	-	-
BR-6	35	4.4	112.2	-	-	13	NP	NP	-	-	SM	A-1-b(0)
BR-6	40	13.2	109.0	-	-	-	-	-	-	-	-	-
BR-6	45	21.0	111.3	-	-	-	-	-	-	0.01	-	-
BR-6	50	16.0	115.8	-	-	-	-	-	-	0.02	-	-
BR-6	55	22.2	101.3	-	-	26	NP	NP	-	-	SM	A-2-4(0)
BR-6	60	14.1	126.0	-	-	-	-	-	-	-	-	-
BR-6	70	27.1	-	-	-	62	44	25	-	0.00	CL	A-7-6(13)
BR-6	75	27.8	96.6	-	-	-	-	-	-	-	-	-
BR-6	80	36.8	85.1	-	-	54	62	34	-	-	CH	A-7-6(15)

Sample ID/ Test Hole No.	Depth (ft)	Natural Moisture Content (%)	Natural Dry Density (pcf)	Grading Analysis (AASHTO)			Atterberg Limits		Unconfined Compressive Strength (psf)	Sulfates (%)	Classification	
				Gravel (%)	Sand (%)	Passing No.200 (%)	Liquid Limit	Plasticity Index			USCS	AASHTO
BR-6	85	31.7	91.8	-	-	45	65	33	-	-	SC	A-7-5(10)
BR-6	90	28.3	96.7	-	-	-	-	-	-	-	-	-
RW-2	5	6.5	119.6	-	-	-	-	-	-	0.04	-	-
RW-2	10	7.1	122.9	-	-	22	25	10	-	-	SC	A-2-4(0)
RW-2	25	11.5	124.1	-	-	27	NP	NP	-	0.04	SM	A-2-4(0)
RW-2	30	14.0	120.1	-	-	-	-	-	-	-	-	-
RW-2	40	22.7	102.4	-	-	59	34	18	-	-	CL	A-6(8)
RW-2	50	20.4	109.6	-	-	-	-	-	-	-	-	-
RW-5	5	5.8	92.8	-	-	-	-	-	-	0.00	-	-
RW-5	10	14.7	114.2	-	-	48	33	18	-	-	SC	A-6(5)
RW-5	15	24.4	98.7	-	-	62	54	35	-	-	CH	A-7-6(19)
RW-5	25	19.4	-	-	-	6	NP	NP	-	-	-	A-3(0)
RW-5	35	21.1	-	-	-	-	-	-	-	-	-	-

WESTBOUND I-70 SUMMARY OF TEST RESULTS

Sample ID/ Test Hole No.	Depth (ft)	Natural Moisture Content (%)	Natural Dry Density (pcf)	Grading Analysis (AASHTO)			Atterberg Limits		Unconfined Compressive Strength (psf)	Sulfates (%)	Classification		Soil or Bedrock Type
				Gravel (%)	Sand (%)	Passing No.200 (%)	Liquid Limit	Plasticity Index			USCS	AASHTO	
2	9	12.7	117.1	5	85	10	NV	NP	-	-	SW-SM	A-2-4(0)	Fill: Well Graded SAND with Silt
2	14	9.6	115.5	-	-	25	NV	NP	-	-	SM	A-2-4(0)	Fill: Silty SAND
2	39	18.7	106.8	0	48	52	43	20	7,080	-	CL	A-7-6(7)	Sandy Lean CLAY
2	44	24.6	99.6	1	34	65	41	16	-	-	CL	A-7-6(9)	Sandy Lean CLAY
2	54	14.6	113.4	1	93	6	NV	NP	-	-	SP-SM	A-2-4(0)	Poorly Graded SAND with Silt
4	4	8.7	118.2	0	84	16	NV	NP	-	-	SM	A-2-4(0)	Fill: Silty SAND
4	14	8.7	121.6	0	86	14	NV	NP	-	-	SM	A-2-4(0)	Fill: Silty SAND
4	19	6.9	112.0	0	91	9	NV	NP	-	-	SP-SM	A-3(0)	Fill: SAND with Silt
4	39	4.4	S/D	1	93	6	NV	NP	-	-	SP-SM	A-1-b(0)	SAND with Silt
4	59	30.9	87.7	-	-	78	39	17	2,200	-	CL	A-6(13)	Sandy CLAY

Sample ID/ Test Hole No.	Depth (ft)	Natural Moisture Content (%)	Natural Dry Density (pcf)	Grading Analysis (AASHTO)			Atterberg Limits		Unconfined Compressive Strength (psf)	Sulfates (%)	Classification	
				Gravel (%)	Sand (%)	Passing No.200 (%)	Liquid Limit	Plasticity Index			USCS	AASHTO
BR-1	10	13.2	105.1	-	-	28	NP	NP	-	-	SN	A-2-4(0)
BR-1	20	22.8	103.8	-	-	55	51	33	-	0.2	CH	A-7-6(14)
BR-1	25	18.2	114.9	-	-	-	-	-	-	-	-	-
BR-1	30	30.6	93.8	-	-	93	74	49	-	0.01	CH	A-7-6(52)
BR-1	40	17.5	-	-	-	10	NP	NP	-	-	-	A-3(0)
BR-1	50	24.4	-	-	-	32	29	13	-	-	SC	A-2-6(0)
BR-1	65	44.9	-	-	-	86	95	73	-	-	CH	A-7-6(69)
BR-2	5	13.3	118.1	-	-	27	NP	NP	-	-	SM	A-2-4(0)
BR-2	10	14.2	116.1	-	-	52	29	15	-	-	CL	A-6(4)
BR-2	20	18.8	106.1	-	-	46	31	16	-	0.00	SC	A-6(4)
BR-2	35	28.1	-	-	-	75	63	48	-	0.00	CH	A-7-6(35)
BR-2	75	23.0	-	-	-	40	-	-	-	0.00	-	-
BR-2	80	38.1	-	-	-	80	79	40	-	-	MH	A-7-5(37)
BR-3	0-5	-	-	-	-	23	NP	NP	-	-	SM	A-2-4(0)
BR-3	20	19.1	111.0	-	-	26	27	7	-	-	SC-SM	A-2-4(0)
BR-3	30	30.1	-	-	-	88	72	51	-	-	CH	A-7-6(49)

Sample ID/ Test Hole No.	Depth (ft)	Natural Moisture Content (%)	Natural Dry Density (pcf)	Grading Analysis (AASHTO)			Atterberg Limits		Unconfined Compressive Strength (psf)	Sulfates (%)	Classification	
				Gravel (%)	Sand (%)	Passing No.200 (%)	Liquid Limit	Plasticity Index			USCS	AASHTO
BR-3	35	24.1	-	-	-	-	-	-	-	0.04	-	-
BR-3	40	14.6	-	-	-	8	NP	NP	-	-	SP-SM	A-1-b(0)
BR-3	50	25.7	-	-	-	44	34	16	-	-	SC	A-6(3)
BR-3	60	32.9	89.3	-	-	66	69	38	-	-	CH	A-7-5(25)
RW-1	5	12.0	122.9	-	-	18	NP	NP	-	-	SM	A-2-4(0)
RW-1	10	10.8	127.9	-	-	-	-	-	-	0.01	-	-
RW-1	15	9.6	124.9	-	-	21	NP	NP	-	-	SM	A-2-4(0)
RW-1	25	13.0	122.3	-	-	51	26	13	-	0.00	CL	A-6(3)
RW-1	30	19.4	119.2	-	-	-	-	-	-	-	-	-
RW-1	35	4.9	108.8	-	-	-	-	-	-	-	-	-
RW-1	40	24.0	102.2	-	-	56	50	33	-	-	CH	A-7-6(15)
RW-1	45	29.3	95.1	-	-	-	-	-	-	-	-	-
RW-1	50	21.9	106.0	-	-	-	-	-	-	-	-	-
RW-3	10	9.9	119.9	-	-	31	NP	NP	-	0.00	-	A-2-4(0)
RW-3	20	8.7	-	-	-	-	-	-	-	0.00	-	-
RW-3	30	9.6	119.9	-	-	30	NP	NP	-	-	SM	A-2-4(0)

Sample ID/ Test Hole No.	Depth (ft)	Natural Moisture Content (%)	Natural Dry Density (pcf)	Grading Analysis (AASHTO)			Atterberg Limits		Unconfined Compressive Strength (psf)	Sulfates (%)	Classification	
				Gravel (%)	Sand (%)	Passing No.200 (%)	Liquid Limit	Plasticity Index			USCS	AASHTO
RW-3	35	5.3	111.4	-	-	-	-	-	-	0.00	-	-
RW-3	40	20.7	-	-	-	59	42	25	-	-	CL	A-7-6(12)
RW-3	45	9.9	116.1	-	-	19	-	-	-	-	-	-
RW-3	50	15.3	117.9	-	-	14	NP	NP	-	-	SM	A-1-b(0)
RW-3	55	21.1	102.3	-	-	-	-	-	-	0.01	-	-
RW-4	0.75-10	-	-	-	-	11	NP	NP	-	0.00	SW-SM	A-1-b(0)
RW-4	5	9.3	118.7	-	-	16	NP	NP	-	0.01	SM	A-2-4(0)
RW-4	15	7.1	120.6	-	-	16	NP	NP	-	-	SM	A-2-4(0)
RW-4	25	6.3	116.7	-	-	18	NP	NP	-	0.01	SM	A-2-4(0)
RW-4	30	12.9	120.6	-	-	-	-	-	-	-	-	-
RW-4	35	19.2	111.3	-	-	57	52	33	-	-	CH	A-7-6(15)
RW-4	40	18.2	110.8	-	-	-	-	-	-	-	-	-
RW-4	45	18.7	117.3	-	-	49	47	33	-	-	SC	A-7-6(11)

RFC02 JUNE, 2015 (REVIEW)

Print Date: $DATE$
File Name: $FILES$
Horiz. Scale: $SCALESHORT$ Vert. Scale: As Noted

LAWRENCE
TSIOUVARAS SIMMONS HOLDERNESS
CONSULTING ENGINEERS

Sheet Revisions

Date:	Comments	Init.

Colorado Department of Transportation
CDOT
4670 N. Holly
Denver, CO 80216
Phone: FAX: 303-398-6781
Region 1 KK

As Constructed
No Revisions:
Revised:
Void:

I-70 OVER HAVANA STREET DESIGN-BUILD
ENGINEERING GEOLOGY
SUMMARY OF TEST RESULTS

Designer: HH.Chiang
Detailer: A.Crandall
Structure Numbers
Sheet Subset: Bridge 1
Subset Sheets: B8 of 45

FBR 0704-230
19339
Sheet Number 46

$PLOT_INFO$

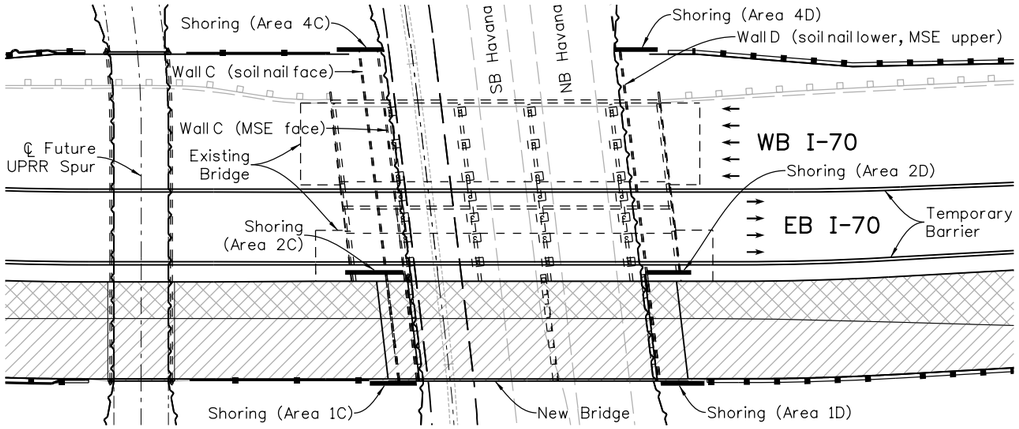

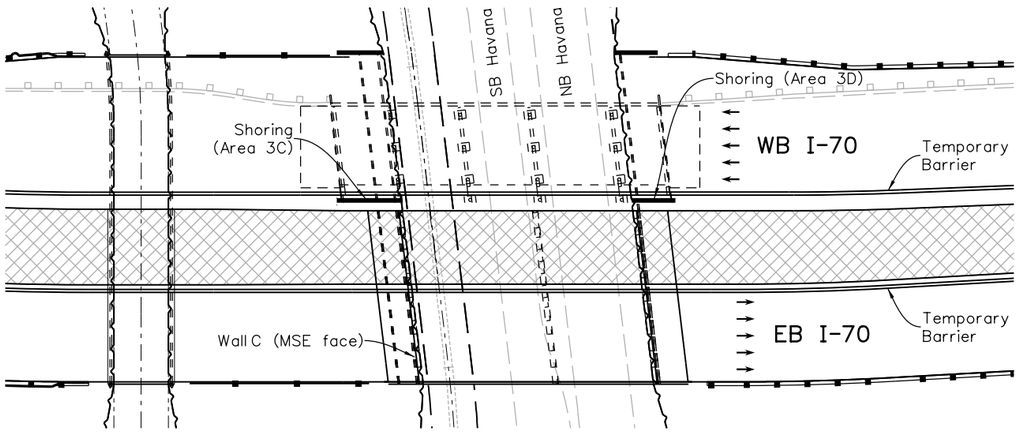

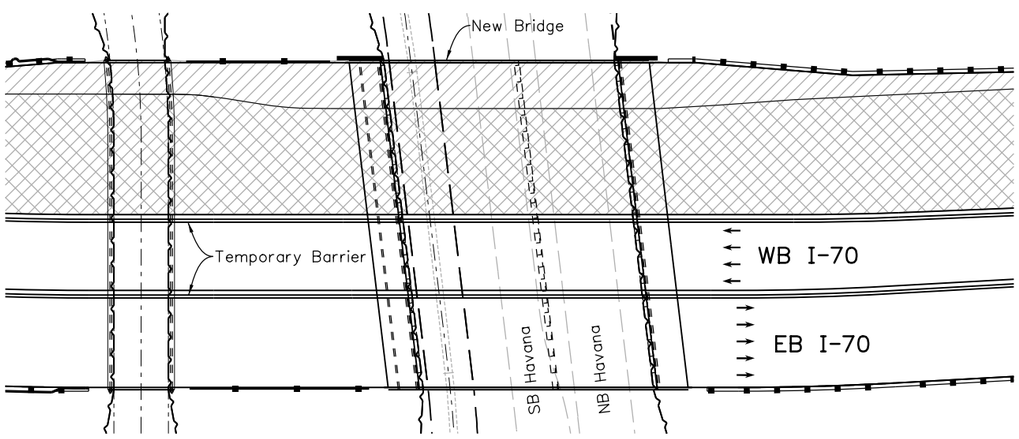

PHASE 1

Construct soil nail walls to full width of bridge at Wall C & D locations.

Shift I-70 traffic north.

Install Shoring Areas 1C & 1D, and Shoring Areas 4C & 4D. Railroad flagging may be required at Wall C. Temporary lane closures or temporary traffic control may be required at Wall D.

Install Shoring Areas 2C & 2D with wire basket wall return along phase line.

Perform Phase 1 demolition of existing bridge.

Construct Phase 1 portion of new bridge.

PHASE 2

Shift eastbound I-70 traffic to Phase 1 portion of new bridge. Maintain westbound I-70 traffic as configured in Phase 1.

Install Shoring Areas 3C & 3D with wire basket wall return along phase line.

Perform Phase 2 demolition of existing bridge.

Construct Phase 2 portion of new bridge.

PHASE 3

Shift westbound I-70 traffic to Phase 2 portion of new bridge. Maintain eastbound I-70 traffic as configured in Phase 2.

Perform Phase 3 demolition of existing bridge.

Construct Phase 3 portion of new bridge.

PHASE 4 (NOT SHOWN)

Install permanent striping and median barrier in permanent location.

Shift traffic to permanent configuration.

LEGEND

Construction/Grading

Removal/Demolition

NOTES

1. Periods of temporary full closure of Havana will be required during demolition and construction operations in each phase.
2. Additional periods of temporary lane closures and other traffic control will be required during demolition and construction operations in each phase.
3. Shoring Areas 1C & 1D and Areas 4C & 4D consist of shoring necessary to retain existing embankment during the construction of the MSE portions of Walls C & D.
4. Shoring Areas 2C & 2D and Areas 3C & 3D consist of shoring necessary to retain existing embankment and temporary facing necessary to retain new backfill during bridge demolition and construction operations.
5. Shoring shown in these plans is schematic and may not represent actual location or extents. Additional shoring may be required during demolition and construction operations.
6. Refer to the as-built drawings for specific existing structure details.
7. The contractor shall be responsible for the maintenance of integrity of all portions of remaining structure throughout project duration.
8. Phased construction requires the partial removal of existing structural components. Tools used for the removal of concrete adjacent to portions of the structure to remain in place shall meet the requirements of the Removal Report/Plan submitted by the Contractor. Sawcutting the limits of removal shall meet requirements specified in the Removal Report/Plan.
9. Temporary falsework, if necessary to support portions of the existing structure, shall be installed prior to bridge removal. Falsework shall be designed in accordance with Subsection 601.11 of the Standard Specifications. Vehicle impact design in accordance with section 3.6.5 Vehicular Collision Force CT of the AASHTO LRFD Bridge Design Specifications, and CDOT Bridge Design Manual 3.3.2.
10. Temporary facing necessary to retain new MSE shall be compatable with the design of the Mechanical Reinforcement of Soil. The Contractor may elect to use Wire Mesh Facing for temporary facing. Temporary facing design and details shall be included in the Shop Plans.
11. Remove temporary shoring, including temporary facing, to 2'-0" below subgrade.
12. For additional bridge phasing information, see "Phasing Sections" sheet.
13. For additional project phasing information, see Construction Traffic Control subset.

RFC02 JUNE, 2015 (REVIEW)

Design			Detail			Quantities		
	INITIAL	DATE		INITIAL	DATE		INITIAL	DATE
Designed By	CCH	05/15	Detailed By	MJW	05/15	Quantities By	JWG	05/15
Checked By	MAG	05/15	Checked By	CCH	05/15	Checked By	CCH	05/15

isaiah.quintana
6/29/2015 5:59:26 PM
DGN MODEL:sheet
P:\1303354DB - I-70 over Havana DB\19339\Bridge\Drawings\19339BRDG_B109-PhasPlan.dgn

Print Date: 6/29/2015
File Name: 19339BRDG_B109-PhasPlan.dgn
Horiz. Scale: None Vert. Scale: None
Staff Bridge Branch - Unit 0224 AJP

TSIOUVARAS SIMMONS HOLDERNESS

Sheet Revisions		
Date:	Comments	Init.

Colorado Department of Transportation
4670 N. Holly
Denver, CO 80216
Phone: 303-398-6767 FAX: 303-398-6781
Region 1 KK

As Constructed
No Revisions:
Revised:
Void:

I-70 OVER HAVANA STREET DESIGN-BUILD
I-70 BRIDGE OVER HAVANA
PHASING PLAN

Designer: C. Hammond
Detailer: A. Pelster
Structure Numbers: E-17-VD
Sheet Subset: Bridge 1
Subset Sheets: B9 of 45

Project No./Code
FBR 0704-230
19339
Sheet Number 47

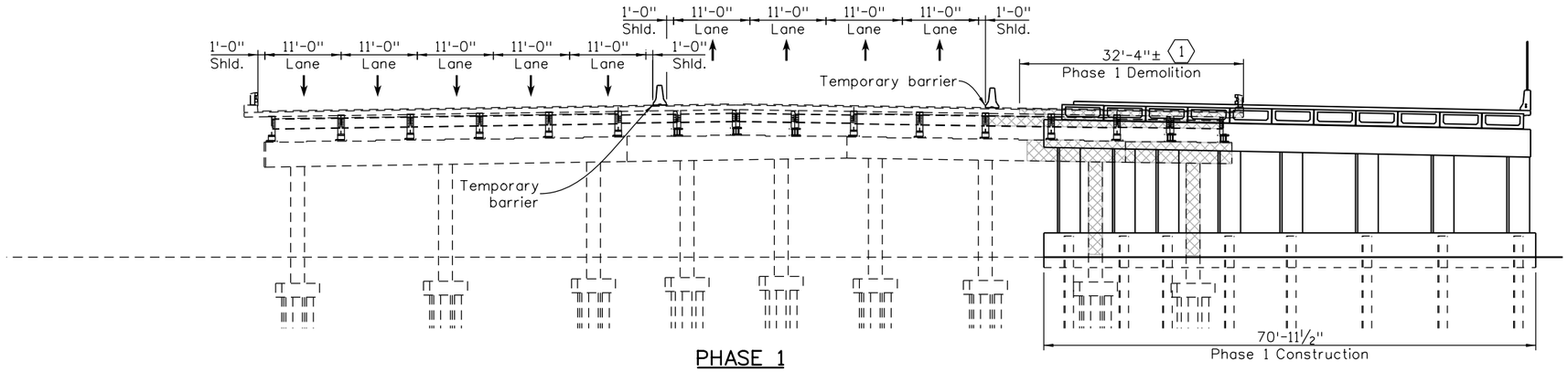

PHASE 1

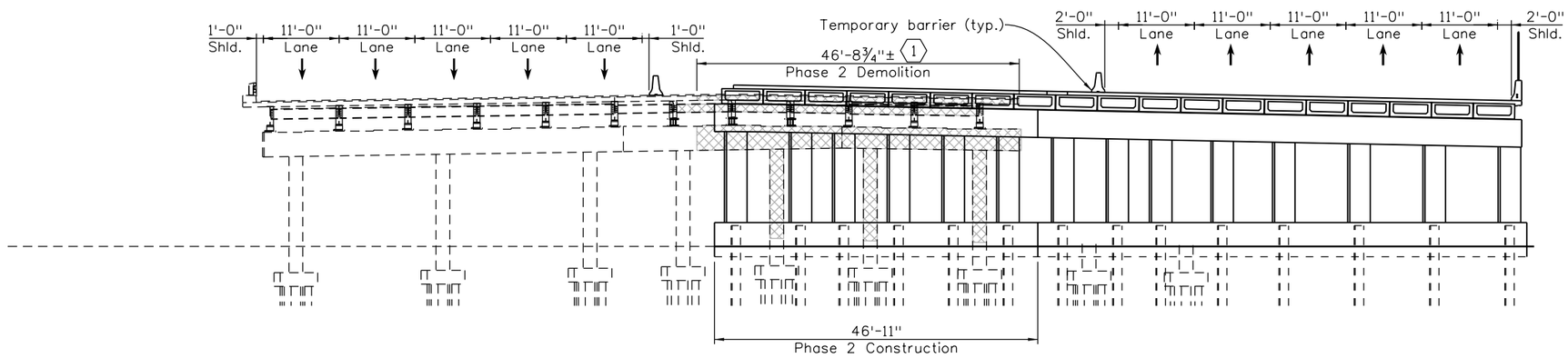

PHASE 2

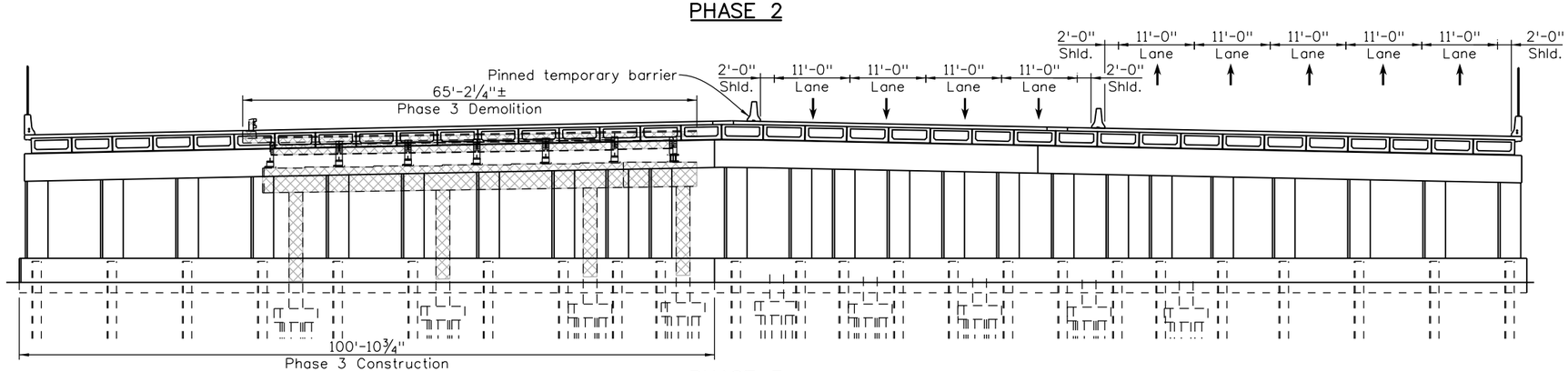

PHASE 3

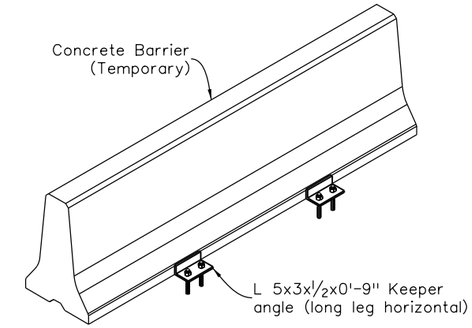

ISOMETRIC VIEW

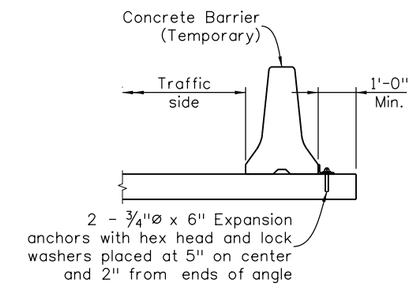

SECTION

TEMPORARY CONCRETE BARRIER DETAIL

NOTES

1. Pier 2 shown. End Bents 1 & 3 similar.
2. Dimensions normal to HCL.
3. Space keeper angles 2'-6" from each end of each 10' precast barrier section.
4. Expansion anchors shall be approved by the Engineer prior to installation.
5. After expansion anchors are removed, the remaining holes shall be filled with non-shrink grout.

KEY NOTES

(1) Phase 1 & 2 Demolition assumes 3'-0" deck remaining outside of temporary barrier. If temporary barrier is pinned, Phase 1 Demolition may be increased to 34'-4".

Design	INITIAL	DATE
Designed By	CCH	05/15
Checked By	MAG	05/15

Detail	INITIAL	DATE
Detailed By	MJW	05/15
Checked By	CCH	05/15

Quantities	INITIAL	DATE
Quantities By	JWG	05/15
Checked By	CCH	05/15

P:\130354DB - I-70 over Havana DB\19339\Bridge\Drawings\19339BRDG_B110-PhasSect.dgn
DGN MODEL:sheet
6/29/2015 5:59:27 PM
isaiah.quintana

Print Date: 6/29/2015
File Name: 19339BRDG_B110-PhasSect.dgn
Horiz. Scale: None Vert. Scale: None
Staff Bridge Branch - Unit 0224 AJP

TSIOUVARAS SIMMONS HOLDERNESS

Sheet Revisions		
Date:	Comments	Init.

Colorado Department of Transportation
4670 N. Holly
Denver, CO 80216
Phone: 303-398-6767 FAX: 303-398-6781
Region 1 KK

As Constructed
No Revisions:
Revised:
Void:

I-70 OVER HAVANA STREET DESIGN-BUILD
I-70 BRIDGE OVER HAVANA
PHASING SECTIONS

Designer:	C. Hammond	Structure Numbers	E-17-VD
Detailer:	A. Pelster		
Sheet Subset:	Bridge 1	Subset Sheets:	B10 of 45

Project No./Code
FBR 0704-230
19339
Sheet Number 48

RFC02 JUNE, 2015 (REVIEW)

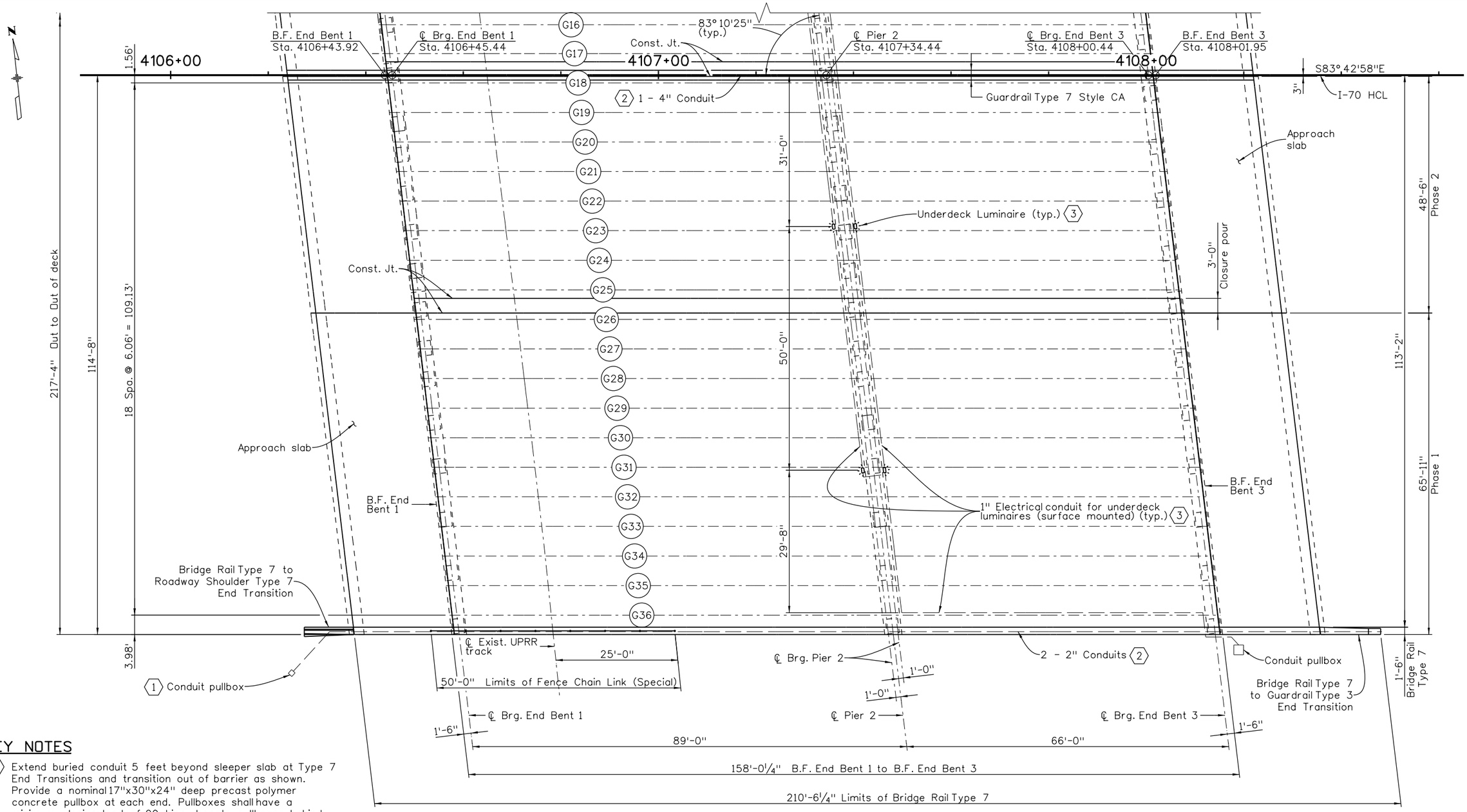

CONSTRUCTION LAYOUT

KEY NOTES

1. Extend buried conduit 5 feet beyond sleeper slab at Type 7 End Transitions and transition out of barrier as shown. Provide a nominal 17"x30"x24" deep precast polymer concrete pullbox at each end. Pullboxes shall have a minimum design load of 20 kips. Locate pullboxes behind guardrail. Contractor to determine final location of pullboxes and identify locations in the as-built plans. Provide expansion/deflection couplers, capable of ¾" minimum axial expansion/contraction, at each ½" expansion joint.
2. Cast conduit into Bridge Rail. All conduits shall be left empty.
3. For lighting details see "CONCEPTUAL LIGHTING PLANS".

Design	INITIAL	DATE	Detail	INITIAL	DATE	Quantities	INITIAL	DATE
Designed By	CCH	05/15	Detailed By	MJW	05/15	Quantities By	JWG	05/15
Checked By	MAG	05/15	Checked By	CCH	05/15	Checked By	CCH	05/15

RFC02 JUNE, 2015 (REVIEW)

isaiah.quintana
6/29/2015 5:59:29 PM
DGN MODEL:sheet 1
P:\130335408 - I-70 over Havana DB\19339\Bridge\Drawings\19339BRDG_B111-12-ConstLay.dgn

Print Date: 6/29/2015
File Name: 19339BRDG_B111-12-ConstLay.dgn
Horiz. Scale: None Vert. Scale: None
Staff Bridge Branch - Unit 0224 AJP

TSIOUVARAS SIMMONS HOLDERNESS

Sheet Revisions		
Date:	Comments	Init.

Colorado Department of Transportation
4670 N. Holly
Denver, CO 80216
Phone: 303-398-6767 FAX: 303-398-6781
Region 1 KK

As Constructed
No Revisions:
Revised:
Void:

I-70 OVER HAVANA STREET DESIGN-BUILD
I-70 BRIDGE OVER HAVANA
CONSTRUCTION LAYOUT (1 OF 2)

Designer:	C. Hammond	Structure Numbers	E-17-VD
Detailer:	M. Welch		
Sheet Subset:	Bridge 1	Subset Sheets:	B11 of 45

Project No./Code
FBR 0704-230
19339
Sheet Number 49

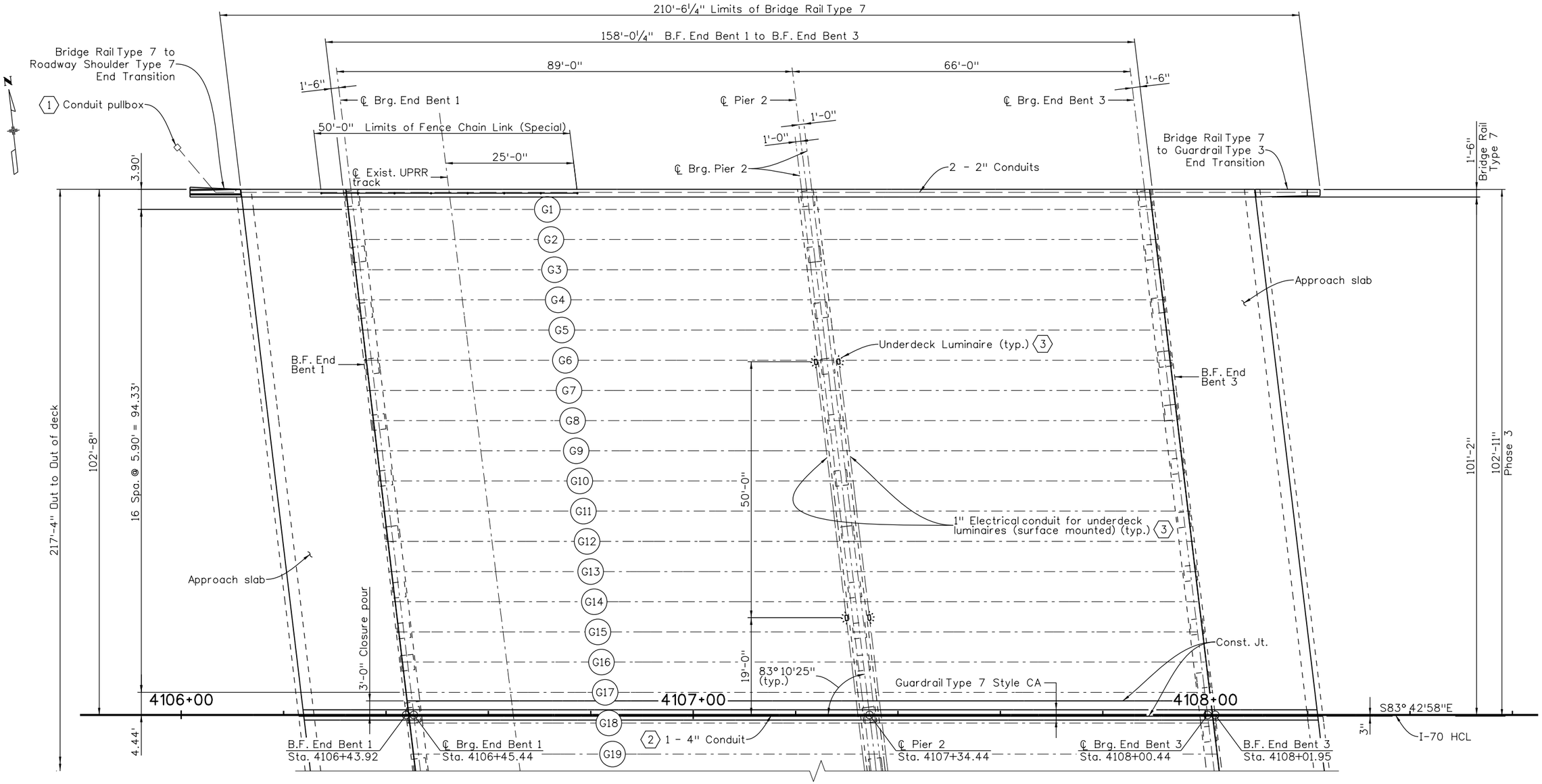

CONSTRUCTION LAYOUT

KEY NOTES

1. Extend buried conduit 5 feet beyond sleeper slab at Type 7 End Transitions and transition out of barrier as shown. Provide a nominal 17"x30"x24" deep precast polymer concrete pullbox at each end. Pullboxes shall have a minimum design load of 20 kips. Locate pullboxes behind guardrail. Contractor to determine final location of pullboxes and identify locations in the as-built plans. Provide expansion/deflection couplers, capable of ¾" minimum axial expansion/contraction, at each ½" expansion joint.
2. Cast conduit into Bridge Rail. All conduits shall be left empty.
3. For lighting details see "CONCEPTUAL LIGHTING PLANS".

Design	INITIAL	DATE	Detail	INITIAL	DATE	Quantities	INITIAL	DATE
Designed By	CCH	05/15	Detailed By	MJW	05/15	Quantities By	JWG	05/15
Checked By	MAG	05/15	Checked By	CCH	05/15	Checked By	CCH	05/15

RFC02 JUNE, 2015 (REVIEW)

isaiah.quintana
6/29/2015 5:59:30 PM
DGN MODEL:sheet 2
P:\130335ADB - I-70 over Havana DB\19339\Bridge\Drawings\19339BRDG_B111-12-ConstLay.dgn

Print Date: 6/29/2015
File Name: 19339BRDG_B111-12-ConstLay.dgn
Horiz. Scale: None Vert. Scale: None
Staff Bridge Branch - Unit 0224 AJP

TSIOUVARAS SIMMONS HOLDERNESS

Sheet Revisions		
Date:	Comments	Init.

Colorado Department of Transportation
4670 N. Holly
Denver, CO 80216
Phone: 303-398-6767 FAX: 303-398-6781
Region 1 KK

As Constructed
No Revisions:
Revised:
Void:

I-70 OVER HAVANA STREET DESIGN-BUILD
I-70 BRIDGE OVER HAVANA
CONSTRUCTION LAYOUT (2 OF 2)

Designer:	C. Hammond	Structure Numbers	E-17-VD
Detailer:	M. Welch		
Sheet Subset:	Bridge 1	Subset Sheets:	B12 of 45

Project No./Code
FBR 0704-230
19339
Sheet Number 50

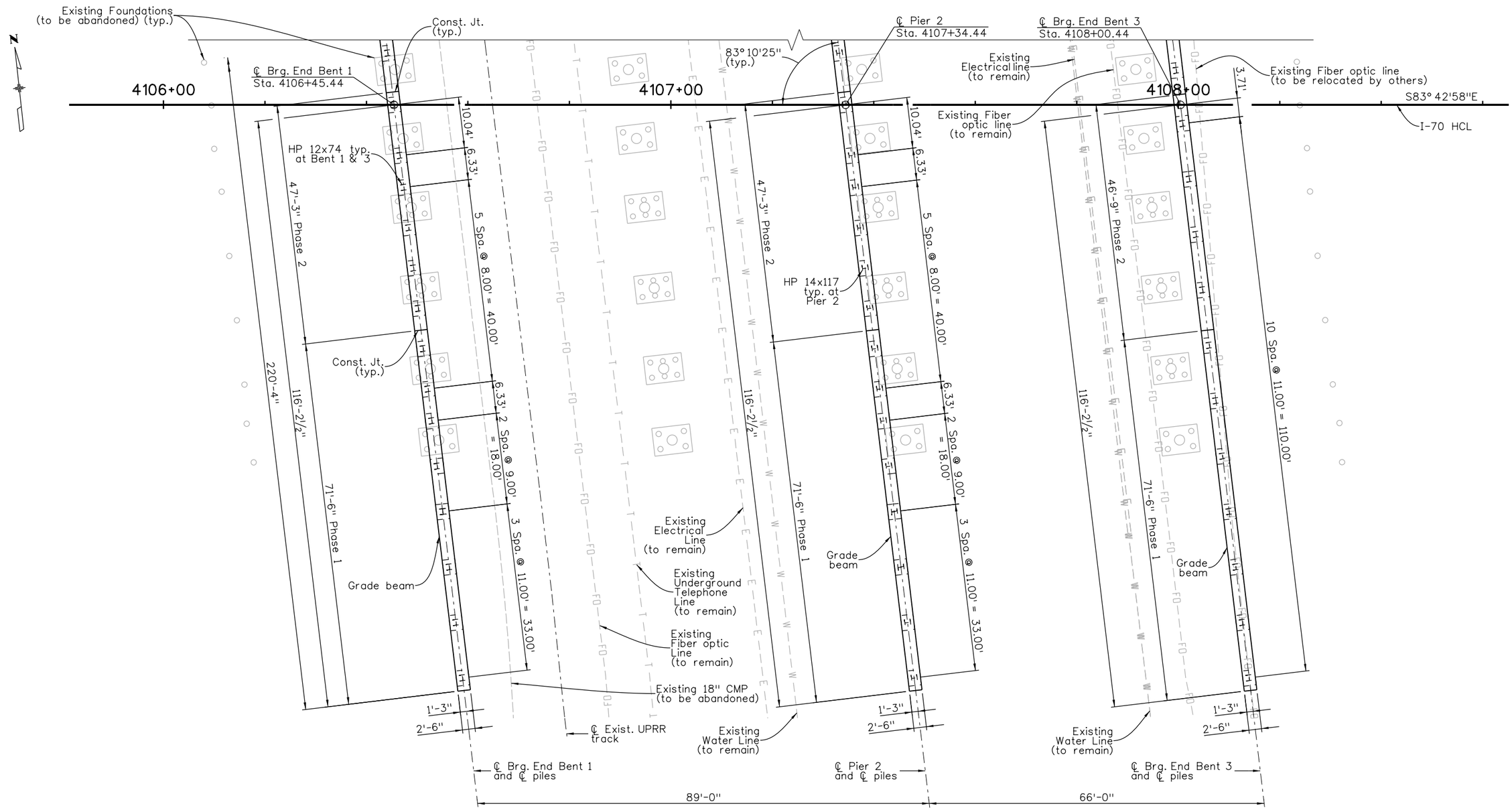

FOUNDATION LAYOUT

Design	INITIAL	DATE	Detail	INITIAL	DATE	Quantities	INITIAL	DATE
Designed By	CCH	05/15	Detailed By	MJW	05/15	Quantities By	JWG	05/15
Checked By	CJK	05/15	Checked By	CCH	05/15	Checked By	CCH	05/15

isaiah.quintana
6/29/2015 5:59:32 PM
DGN MODEL:sheet 1
P:\130335\DB - I-70 over Havana DB\19339\Bridge\Drawings\19339BRDG_B113-14-FoundLay.dgn

RFC02 JUNE, 2015 (REVIEW)

Print Date: 6/29/2015
File Name: 19339BRDG_B113-14-FoundLay.dgn
Horiz. Scale: None Vert. Scale: None
Staff Bridge Branch - Unit 0224 AJP

TSIOUVARAS SIMMONS HOLDERNESS

Sheet Revisions		
Date:	Comments	Init.

Colorado Department of Transportation
4670 N. Holly
Denver, CO 80216
Phone: 303-398-6767 FAX: 303-398-6781
Region 1 KK

As Constructed
No Revisions:
Revised:
Void:

I-70 OVER HAVANA STREET DESIGN-BUILD
I-70 BRIDGE OVER HAVANA
FOUNDATION LAYOUT (1 OF 2)

Designer: C. Hammond
Detailer: M. Welch
Sheet Subset: Bridge 1
Structure Numbers: E-17-VD
Subset Sheets: B13 of 45

Project No./Code
FBR 0704-230
19339
Sheet Number 51

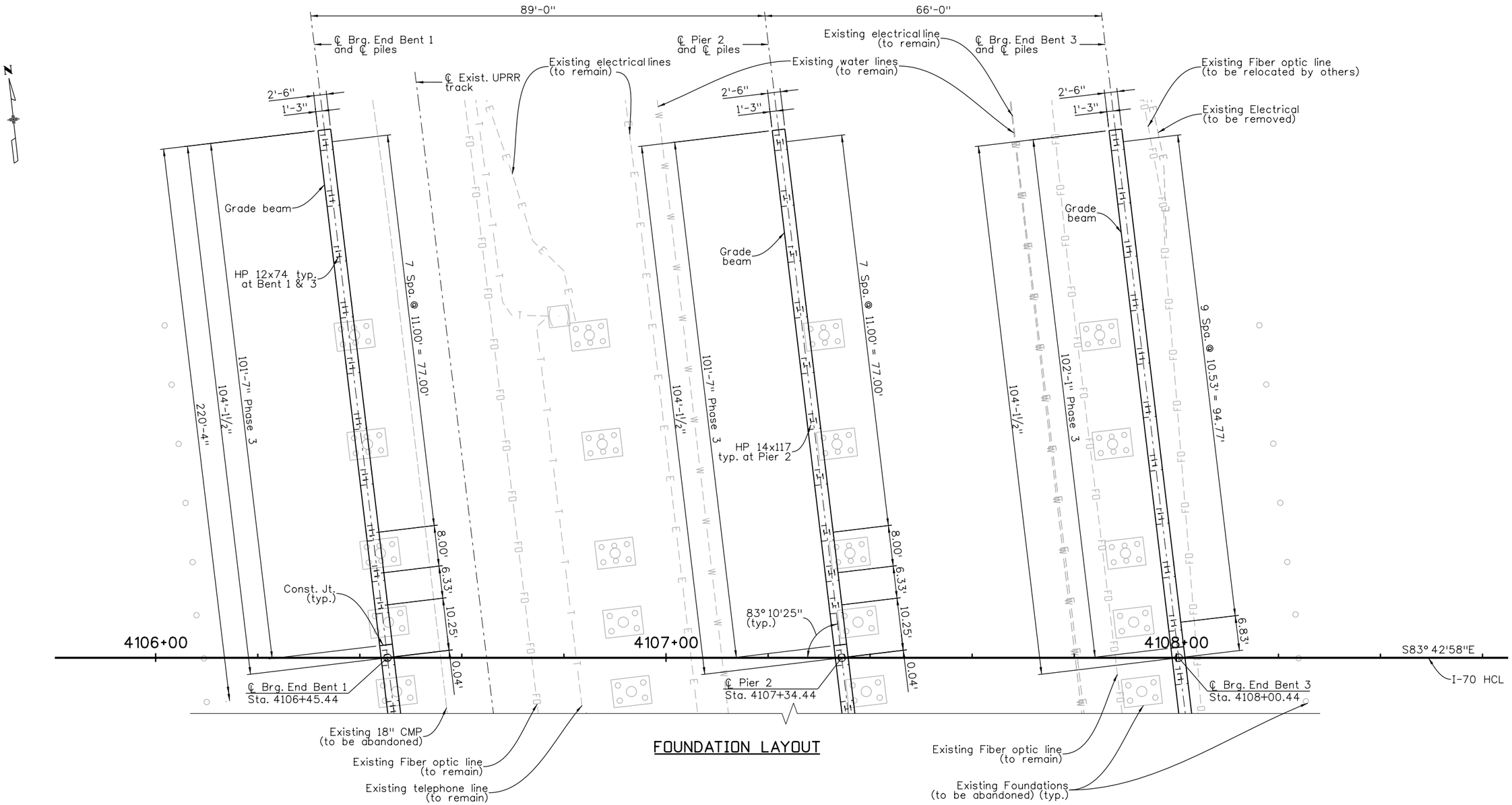

FOUNDATION LAYOUT

Design	INITIAL	DATE	Detail	INITIAL	DATE	Quantities	INITIAL	DATE
Designed By	CCH	05/15	Detailed By	MJW	05/15	Quantities By	JWG	05/15
Checked By	CJK	05/15	Checked By	CCH	05/15	Checked By	CCH	05/15

isaiah.quintana
6/29/2015 5:59:33 PM
DGN MODEL:sheet 2
P:\1303354DB - I-70 over Havana DB\19339\Bridge\Drawings\19339BRDG_B113-14-FoundLay.dgn

Print Date: 6/29/2015
File Name: 19339BRDG_B113-14-FoundLay.dgn
Horiz. Scale: None Vert. Scale: None
Staff Bridge Branch - Unit 0224 AJP

TSIOUVARAS SIMMONS HOLDERNESS

Sheet Revisions		
Date:	Comments	Init.

Colorado Department of Transportation
4670 N. Holly
Denver, CO 80216
Phone: 303-398-6767 FAX: 303-398-6781
Region 1 KK

As Constructed
No Revisions:
Revised:
Void:

I-70 OVER HAVANA STREET DESIGN-BUILD
I-70 BRIDGE OVER HAVANA
FOUNDATION LAYOUT (2 OF 2)

Designer: C. Hammond
Detailer: M. Welch
Sheet Subset: Bridge 1
Structure Numbers: E-17-VD
Subset Sheets: B14 of 45

Project No./Code
FBR 0704-230
19339
Sheet Number 52

RFC02 JUNE, 2015 (REVIEW)

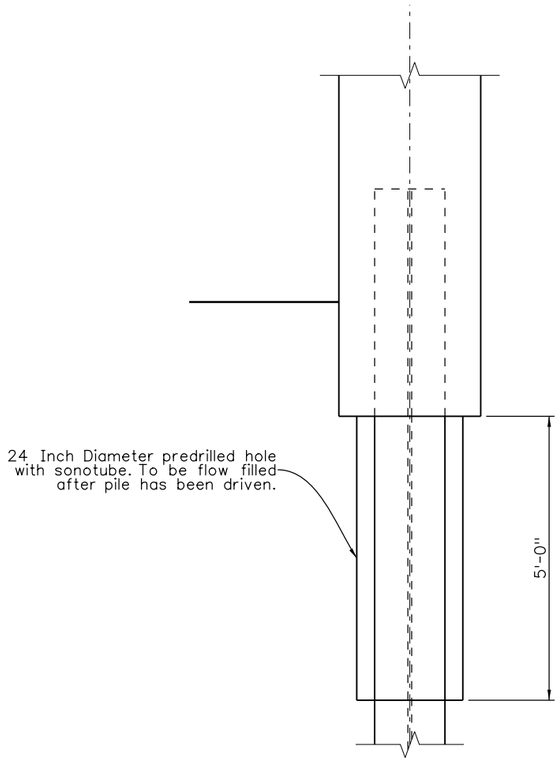

ALTERNATIVE 1 CORROSION MITIGATION LIMITS

(Similar to corrosion mitigation limits except as noted)

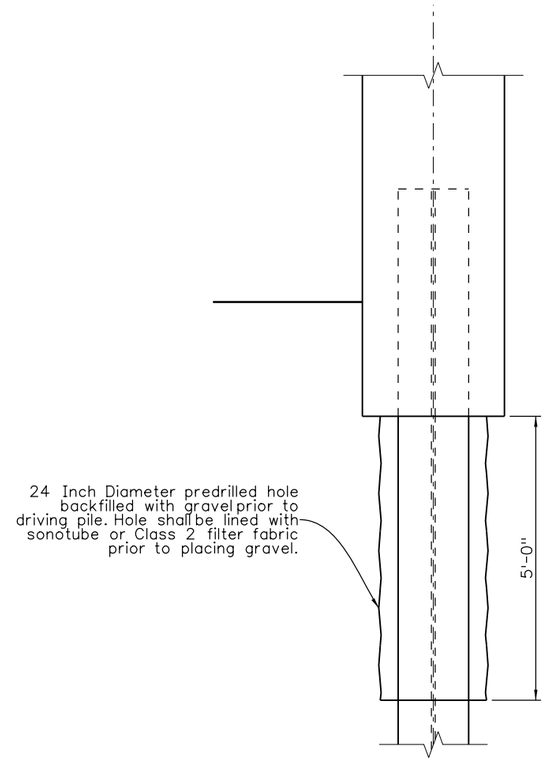

ALTERNATIVE 2 CORROSION MITIGATION LIMITS

(Similar to corrosion mitigation limits except as noted)

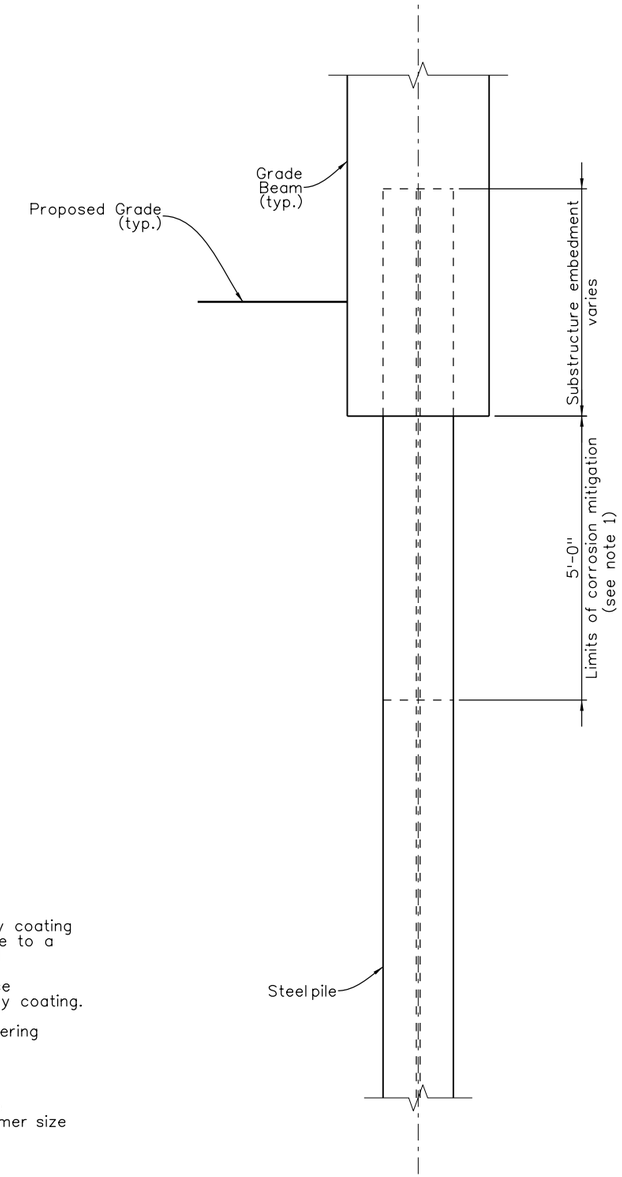

CORROSION MITIGATION LIMITS

PILING DATA

LOCATION	PILE SIZE	PILE CUT OFF ELEV.	EST. BEDROCK ELEV.	ESTIMATED PENETRATION INTO BEDROCK (FT.) ■	EST. TIP ELEV.	FACTORED MAXIMUM LOAD (TONS)
End Bent 1	HP 12x74	5281.00	5220	5	5215	231
Pier 2- Phase 1	HP 14x117	5290.50	5220	5	5215	294
Pier 2- Phase 2	HP 14x117	5290.32	5220	5	5215	294
Pier 2- Phase 3	HP 14x117	5290.19	5220	5	5215	294
End Bent 3	HP 12x74	5289.00	5220	5	5215	231

■ Acceptance of the pile shall be based on the PDA test results, not the bedrock penetration.

NOTES

1. Piles shall be protected with industrial grade coal tar epoxy coating on all exposed surfaces from the top of the exposed pile to a depth 5'-0" below bottom of grade beam. Thickness and application of the protective coating shall comply with manufacturer's recommendations. The contractor may use alternatives 1 and 2 as shown in lieu of the coal tar epoxy coating.
2. Geotechnial data for piling design based on Ground Engineering report No. 15-3500A, dated May 5, 2015.
3. Piling shall be ASTM A572 GR 50.
4. A wave equation analysis of pile driving (WEAP) should be performed to predict pile drivability, evaluate driving hammer size and develop preliminary driving criteria.
5. For location of piles, see "Foundation Layout" sheets.
6. The resistance factors for piles are based on a minimum of one pile per End Bent/Pier (3 total) being tested with a PDA with signal matching (CAPWAP).

Design	INITIAL	DATE	Detail	INITIAL	DATE	Quantities	INITIAL	DATE
Designed By	CCH	05/15	Detailed By	MJW	05/15	Quantities By	JWG	05/15
Checked By	CJK	05/15	Checked By	CCH	05/15	Checked By	CCH	05/15

P:\130335DB - I-70 over Havana DB\19339\Bridge\Drawings\19339BRDG_B115-FoundDet.dgn
isaiah.quintana
6/29/2015 5:59:35 PM
DGN MODEL:sheet

Print Date: 6/29/2015
File Name: 19339BRDG_B115-FoundDet.dgn
Horiz. Scale: None Vert. Scale: None
Staff Bridge Branch - Unit 0224 AJP
TSIOUVARAS SIMMONS HOLDERNESS

Sheet Revisions		
Date:	Comments	Init.

Colorado Department of Transportation
4670 N. Holly
Denver, CO 80216
Phone: 303-398-6767 FAX: 303-398-6781
Region 1 KK

As Constructed
No Revisions:
Revised:
Void:

I-70 OVER HAVANA STREET DESIGN-BUILD
I-70 BRIDGE OVER HAVANA
FOUNDATION DETAILS

Designer: C. Hammond
Detailer: M. Welch
Sheet Subset: Bridge 1
Structure Numbers: E-17-VD
Subset Sheets: B15 of 45

Project No./Code
FBR 0704-230
19339
Sheet Number 53

RFC02 JUNE, 2015 (REVIEW)

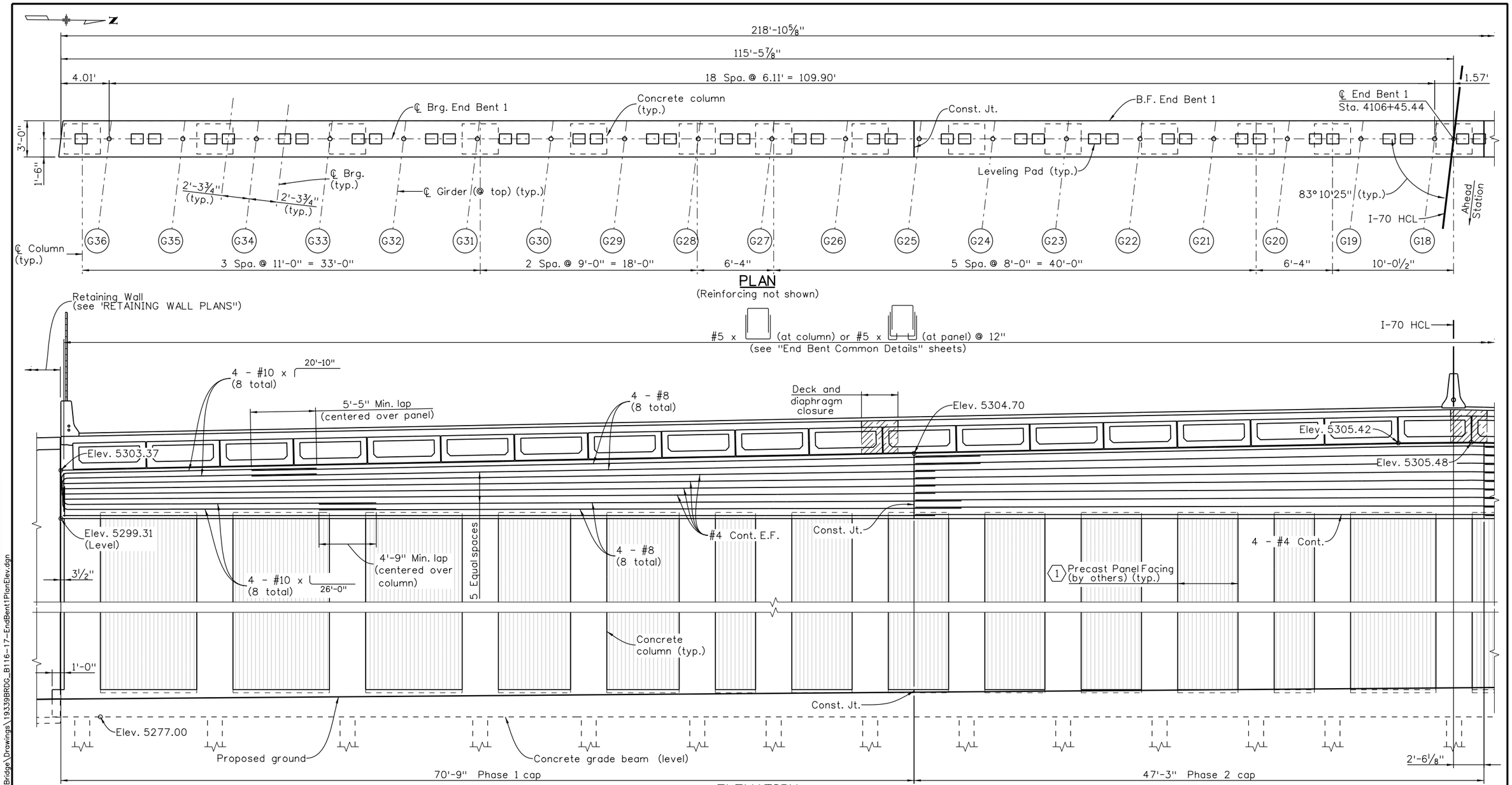

ELEVATION

(Looking back station, taken parallel to ℄ Brg.)
(Reinforcing for deck, bridge rails, columns and grade beam not shown)

NOTES

1. End bent shall be Concrete Class D (Bridge).
2. For additional information see "End Bent 1 Details" and "End Bent Common Details" sheets.
3. Minimum lap splice at phase lines:
   #4 = 1'-10"
   #8 (top mat) = 5'-7"
   #8 = 4'-11"
4. Mechanical couplers may be used in lieu of lap splices.
5. Except where noted otherwise, lap splices of end bent reinforcing shall be staggered and shall meet or exceed the following minimum lengths:
   #4 = 1'-3"
   #8 (top mat) = 4'-2"
   #8 = 3'-8"

KEY NOTES

1. Limits of fractured fin formliner. The formliner shall have a minimum depth of 1 inch and rib spacing not greater than 2 inches.

Design		INITIAL	DATE
	Designed By	CCH	05/15
	Checked By	CJK	05/15

Detail		INITIAL	DATE
	Detailed By	MJW	05/15
	Checked By	CCH	05/15

Quantities		INITIAL	DATE
	Quantities By	JWG	05/15
	Checked By	CCH	05/15

P:\1303354DB - I-70 over Havana DB\19339\Bridge\Drawings\19339BRDG_B116-17-EndBent1PlanElev.dgn
isaiah.quintana 6/29/2015 5:59:36 PM DGN MODEL:sheet1

Print Date: 6/29/2015
File Name: 19339BRDG_B116-17-EndBent1PlanElev.dgn
Horiz. Scale: None Vert. Scale: None
Staff Bridge Branch - Unit 0224 AJP

TSIOUVARAS SIMMONS HOLDERNESS

Sheet Revisions		
Date:	Comments	Init.

Colorado Department of Transportation
4670 N. Holly
Denver, CO 80216
Phone: 303-398-6767 FAX: 303-398-6781
Region 1 KK

As Constructed
No Revisions:
Revised:
Void:

I-70 OVER HAVANA STREET DESIGN-BUILD
I-70 BRIDGE OVER HAVANA
END BENT 1 PLAN AND ELEVATION (1 OF 2)

Designer: C. Hammond
Detailer: M. Welch
Structure Numbers: E-17-VD
Sheet Subset: Bridge 1
Subset Sheets: B16 of 45

Project No./Code
FBR 0704-230
19339
Sheet Number 54

RFC02 JUNE, 2015 (REVIEW)

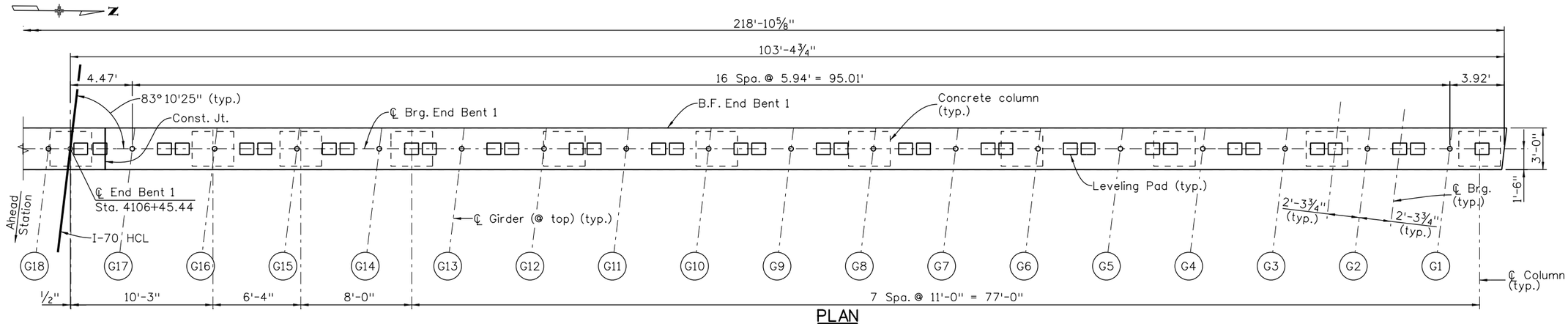

PLAN

(Reinforcing not shown)

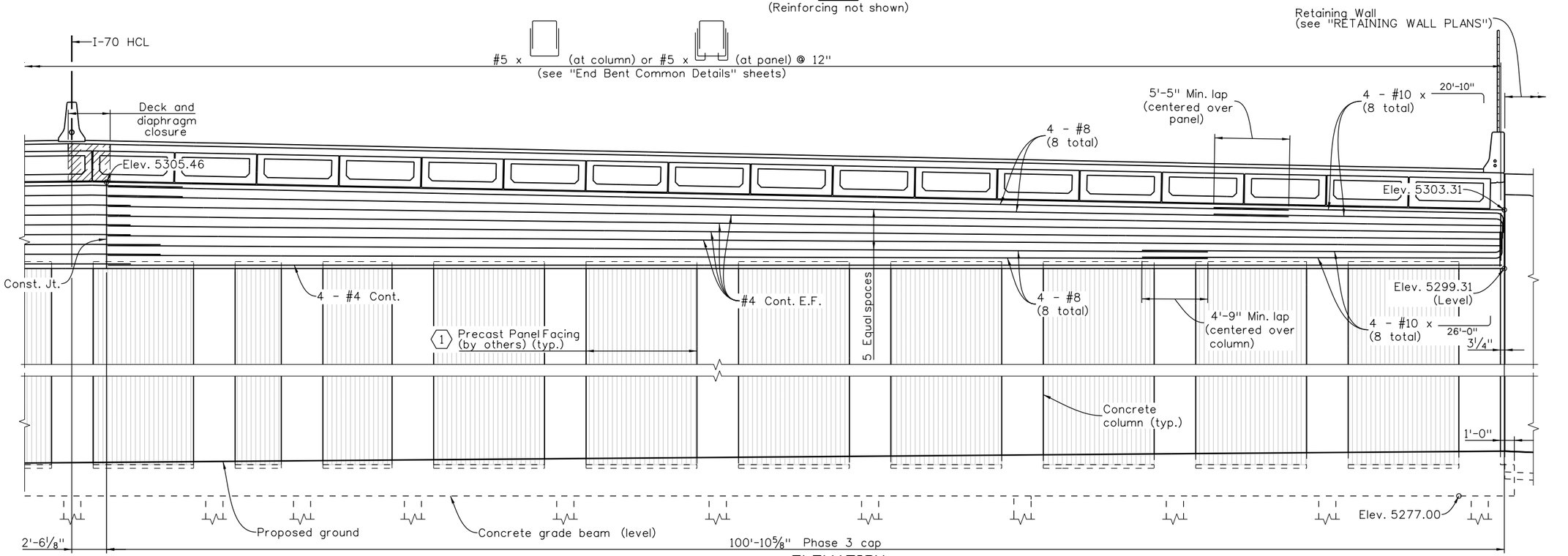

ELEVATION

(Looking back station, taken parallel to ℄ Brg.)
(Reinforcing for deck, bridge rails, columns and grade beam not shown)

NOTES

1. End bent shall be Concrete Class D (Bridge).
2. For additional information see "End Bent 1 Details" and "End Bent Common Details" sheets.
3. Minimum lap splice at phase lines:
   #4 = 1'-10"
   #8 (top mat) = 5'-7"
   #8 = 4'-11"
4. Mechanical couplers may be used in lieu of lap splices.
5. Except where noted otherwise, lap splices of end bent reinforcing shall be staggered and shall meet or exceed the following minimum lengths:
   #4 = 1'-3"
   #8 (top mat) = 4'-2"
   #8 = 3'-8"

KEY NOTES

1. Limits of fractured fin formliner. The formliner shall have a minimum depth of 1 inch and rib spacing not greater than 2 inches.

Design	INITIAL	DATE	Detail	INITIAL	DATE	Quantities	INITIAL	DATE
Designed By	CGH	05/15	Detailed By	MJW	05/15	Quantities By	JWG	05/15
Checked By	CJK	05/15	Checked By	CGH	05/15	Checked By	CGH	05/15

P:\1303354DB - I-70 over Havana DB\19339\Bridge\Drawings\19339BRDG_B116-17-EndBent1PlanElev.dgn
DGN MODEL:sheet2
6/29/2015 5:59:38 PM
isaiah.quintana

Print Date: 6/29/2015
File Name: 19339BRDG_B116-17-EndBent1PlanElev.dgn
Horiz. Scale: None Vert. Scale: None
Staff Bridge Branch - Unit 0224 AJP
LAWRENCE
TSIOUVARAS SIMMONS HOLDERNESS

Sheet Revisions		
Date:	Comments	Init.

Colorado Department of Transportation
CDOT
4670 N. Holly
Denver, CO 80216
Phone: 303-398-6767 FAX: 303-398-6781
Region 1 KK

As Constructed
No Revisions:
Revised:
Void:

I-70 OVER HAVANA STREET DESIGN-BUILD
I-70 BRIDGE OVER HAVANA
END BENT 1 PLAN AND ELEVATION (2 OF 2)

Designer:	C. Hammond	Structure Numbers	E-17-VD
Detailer:	M. Welch		
Sheet Subset:	Bridge 1	Subset Sheets:	B17 of 45

Project No./Code
FBR 0704-230
19339
Sheet Number 55

RFC02 JUNE, 2015 (REVIEW)

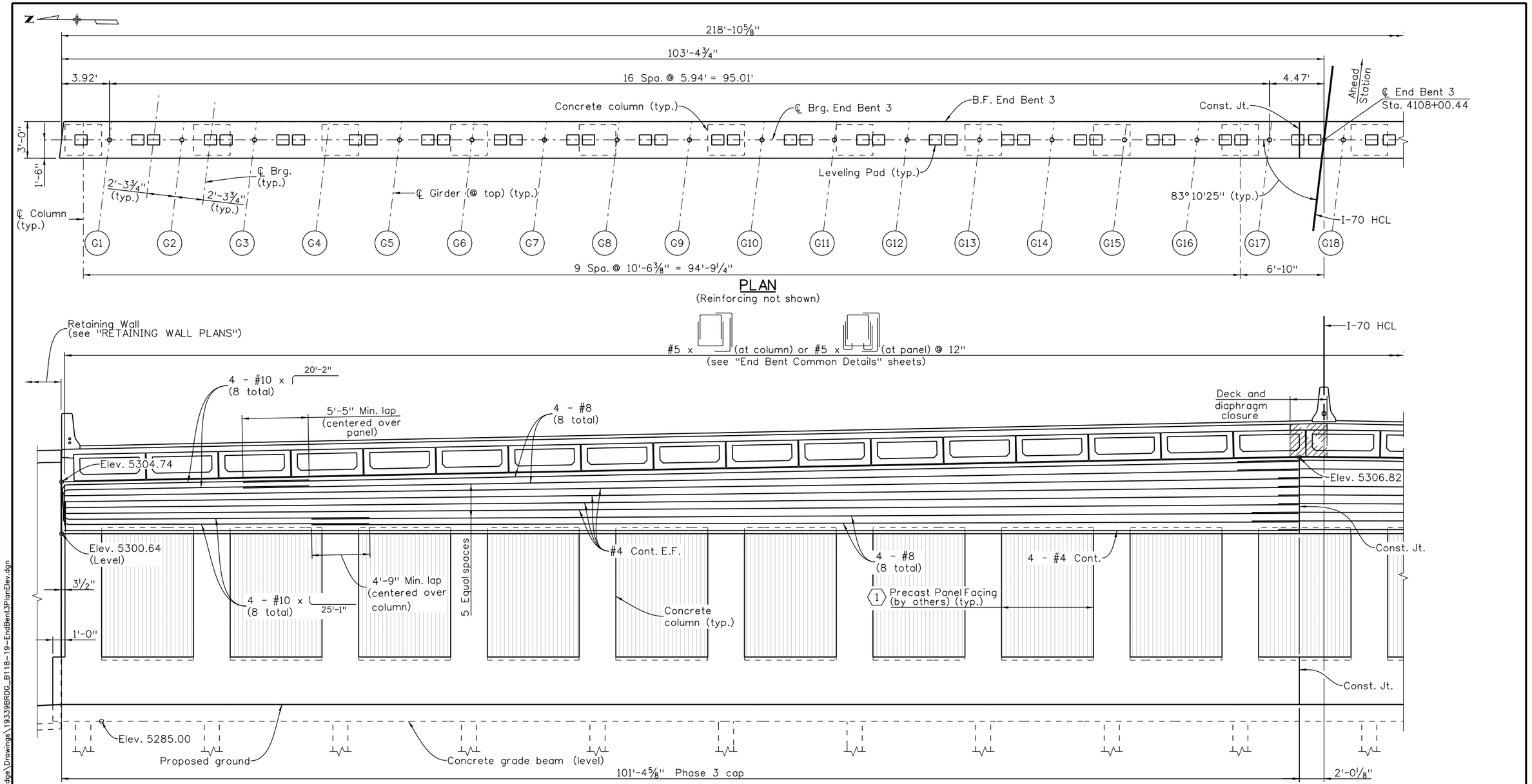

NOTES

1. End bent shall be Concrete Class D (Bridge).
2. For additional information see "End Bent 1 Details" and "End Bent Common Details" sheets.
3. Minimum lap splice at phase lines:
   #4 = 1'-10"
   #8 (top mat) = 5'-7"
   #8 = 4'-11"
4. Mechanical couplers may be used in lieu of lap splices.
5. Except where noted otherwise, lap splices of end bent reinforcing shall be staggered and shall meet or exceed the following minimum lengths:
   #4 = 1'-3"
   #8 (top mat) = 4'-2"
   #8 = 3'-8"

KEY NOTES

(1) Limits of fractured fin formliner. The formliner shall have a minimum depth of 1 inch and rib spacing not greater than 2 inches.

Design	INITIAL	DATE	Detail	INITIAL	DATE	Quantities	INITIAL	DATE
Designed By	CCH	05/15	Detailed By	MJW	05/15	Quantities By	JWG	05/15
Checked By	CJK	05/15	Checked By	CCH	05/15	Checked By	CCH	05/15

P:\13033540B - I-70 over Havana DB\19339\Bridge\Drawings\19339BRDG_B118-19-EndBent3PlanElev.dgn
DGN MODEL:sheet1
6/29/2015 5:59:39 PM
isaiah.quintana

Print Date: 6/29/2015			
File Name: 19339BRDG_B118-19-EndBent3PlanElev.dgn			
Horiz. Scale: None	Vert. Scale: None		
Staff Bridge Branch - Unit 0224		AJP	

TSIOUVARAS SIMMONS HOLDERNESS

Sheet Revisions		
Date:	Comments	Init.

Colorado Department of Transportation
4670 N. Holly
Denver, CO 80216
Phone: 303-398-6767 FAX: 303-398-6781
Region 1 KK

As Constructed
No Revisions:
Revised:
Void:

I-70 OVER HAVANA STREET DESIGN-BUILD
I-70 BRIDGE OVER HAVANA
END BENT 3 PLAN AND ELEVATION (1 OF 2)

Designer:	C. Hammond	Structure Numbers	E-17-VD
Detailer:	M. Welch		
Sheet Subset:	Bridge 1	Subset Sheets:	B18 of 45

Project No./Code
FBR 0704-230
19339
Sheet Number 56

RFC02 JUNE, 2015 (REVIEW)

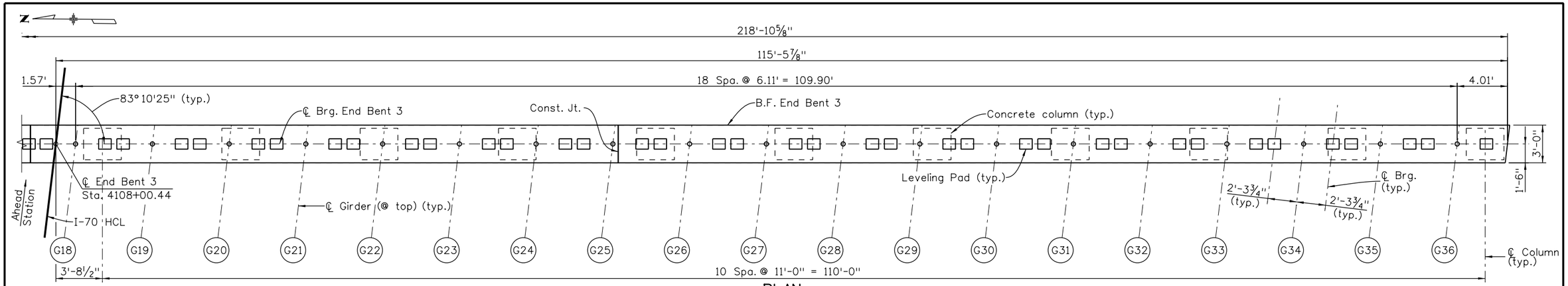

PLAN

(Reinforcing not shown)

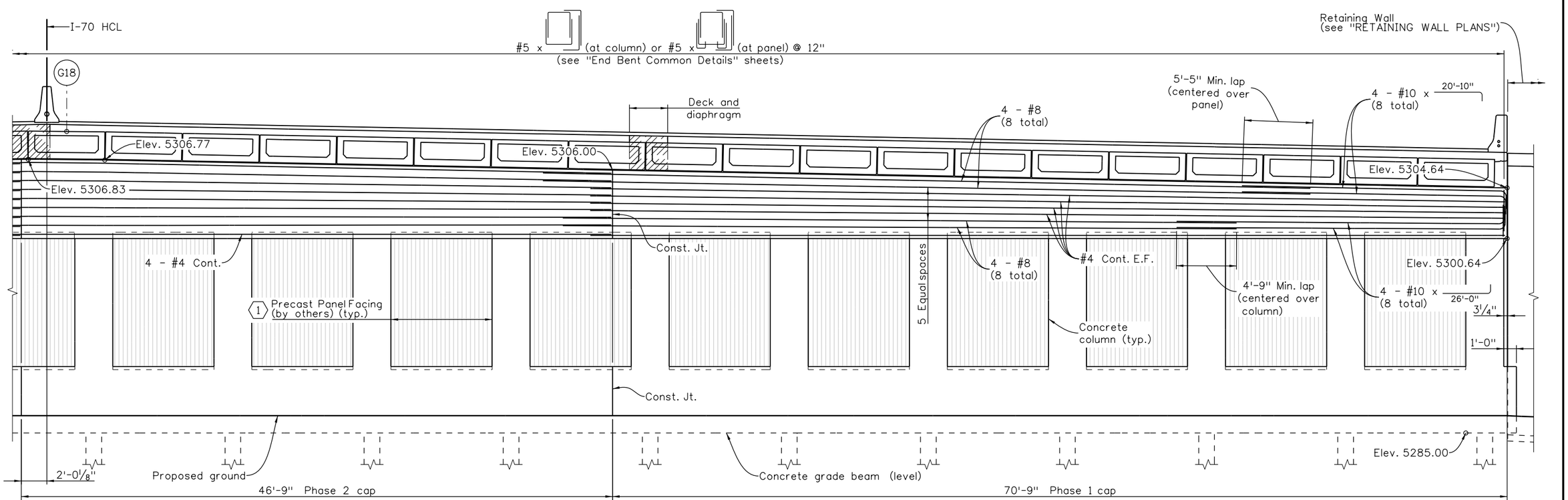

ELEVATION

(Looking ahead station, taken parallel to ℄ Brg.)
(Reinforcing for deck, bridge rails, columns and grade beam not shown)

NOTES

1. End bent shall be Concrete Class D (Bridge).
2. For additional information see "End Bent 1 Details" and "End Bent Common Details" sheets.
3. Minimum lap splice at phase lines:
   #4 = 1'-10"
   #8 (top mat) = 5'-7"
   #8 = 4'-11"
4. Mechanical couplers may be used in lieu of lap splices.
5. Except where noted otherwise, lap splices of end bent reinforcing shall be staggered and shall meet or exceed the following minimum lengths:
   #4 = 1'-3"
   #8 (top mat) = 4'-2"
   #8 = 3'-8"

KEY NOTES

(1) Limits of fractured fin formliner. The formliner shall have a minimum depth of 1 inch and rib spacing not greater than 2 inches.

Design	INITIAL	DATE	Detail	INITIAL	DATE	Quantities	INITIAL	DATE
Designed By	CCH	05/15	Detailed By	MJW	05/15	Quantities By	JWG	05/15
Checked By	CJK	05/15	Checked By	CCH	05/15	Checked By	CCH	05/15

iasiah.quintana
6/29/2015 5:59:41 PM
DGN MODEL:sheet2
P:\1303354DB - I-70 over Havana DB\19339\Bridge\Drawings\19339BRDG_B118-19-EndBent3PlanElev.dgn

Print Date: 6/29/2015
File Name: 19339BRDG_B118-19-EndBent3PlanElev.dgn
Horiz. Scale: None Vert. Scale: None
Staff Bridge Branch - Unit 0224 AJP

TSIOUVARAS SIMMONS HOLDERNESS

Sheet Revisions		
Date:	Comments	Init.

Colorado Department of Transportation
4670 N. Holly
Denver, CO 80216
Phone: 303-398-6767 FAX: 303-398-6781
Region 1 KK

As Constructed
No Revisions:
Revised:
Void:

I-70 OVER HAVANA STREET DESIGN-BUILD
I-70 BRIDGE OVER HAVANA
END BENT 3 PLAN AND ELEVATION (2 OF 2)

Designer: C. Hammond
Detailer: M. Welch
Sheet Subset: Bridge 1
Structure Numbers: E-17-VD
Subset Sheets: B19 of 45

Project No./Code
FBR 0704-230
19339
Sheet Number 57

RFC02 JUNE, 2015 (REVIEW)

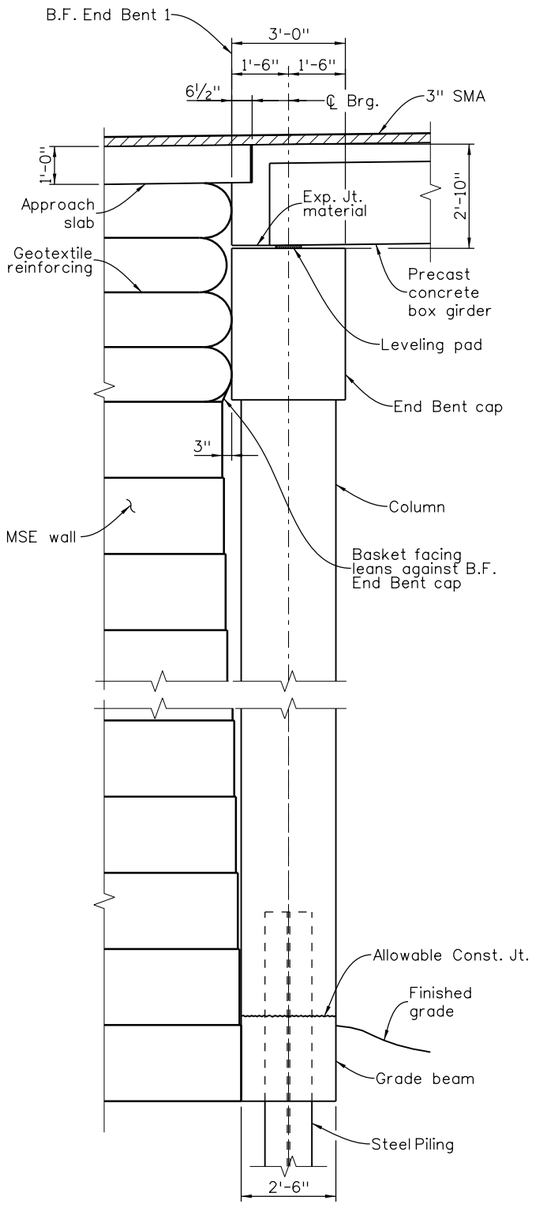

TYPICAL SECTION AT COLUMN
(End Bent 1)

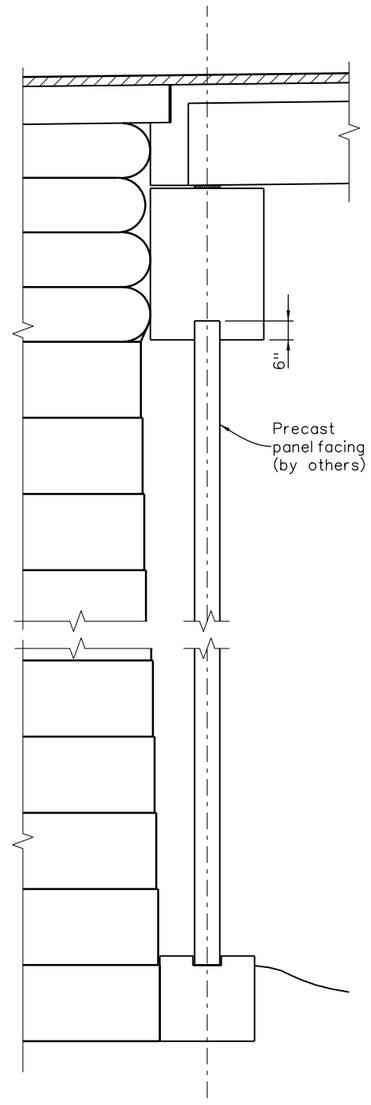

TYPICAL SECTION AT PANEL
(End Bent 1)
(Similar to "Typical Section at Column" except as noted)

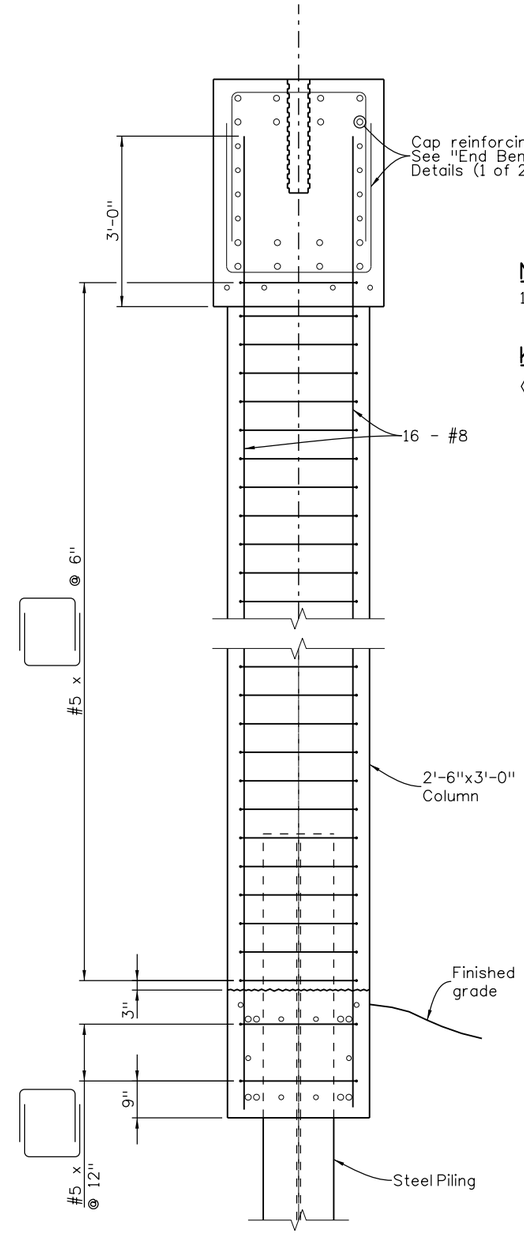

REINFORCING AT COLUMN

NOTES

1. B.F. Grade Beam and End Bent cap shall not be poured against bare earth.

KEY NOTES

(1) Given notch dimension assumes a panel thickness of 8". Actual notch dimension will vary depending on final panel thickness.

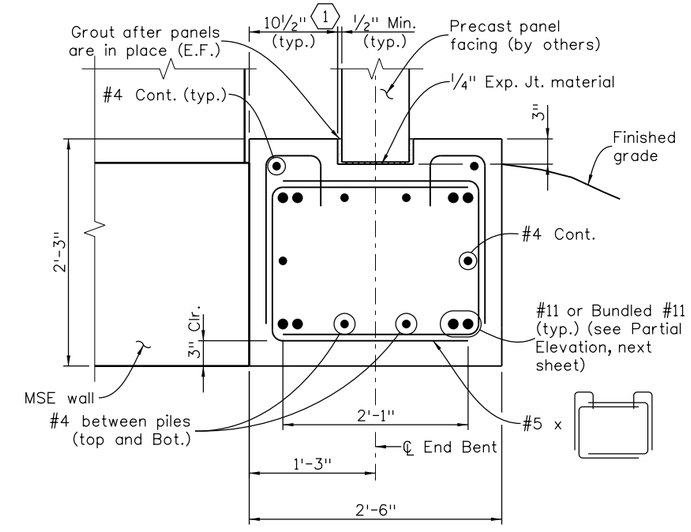

GRADE BEAM DETAIL

Design	INITIAL	DATE	Detail	INITIAL	DATE	Quantities	INITIAL	DATE
Designed By	CCH	05/15	Detailed By	MJW	05/15	Quantities By	JWG	05/15
Checked By	CJK	05/15	Checked By	CCH	05/15	Checked By	CCH	05/15

P:\1303354DB - I-70 over Havana DB\19339\Bridge\Drawings\19339BRDG_B120-25-EndBentDet.dgn
isaiah.quintana
6/29/2015 5:59:42 PM
DGN MODEL:sheet1

Print Date: 6/29/2015
File Name: 19339BRDG_B120-25-EndBentDet.dgn
Horiz. Scale: None Vert. Scale: None
Staff Bridge Branch - Unit 0224 AJP

TSIOUVARAS SIMMONS HOLDERNESS

Sheet Revisions		
Date:	Comments	Init.

Colorado Department of Transportation
4670 N. Holly
Denver, CO 80216
Phone: 303-398-6767 FAX: 303-398-6781
Region 1 KK

As Constructed
No Revisions:
Revised:
Void:

I-70 OVER HAVANA STREET DESIGN-BUILD
I-70 BRIDGE OVER HAVANA
END BENT 1 DETAILS (1 OF 2)

Designer: C. Hammond
Detailer: M. Welch
Structure Numbers: E-17-VD
Sheet Subset: Bridge 1
Subset Sheets: B20 of 45

Project No./Code
FBR 0704-230
19339
Sheet Number 58

RFC02 JUNE, 2015 (REVIEW)

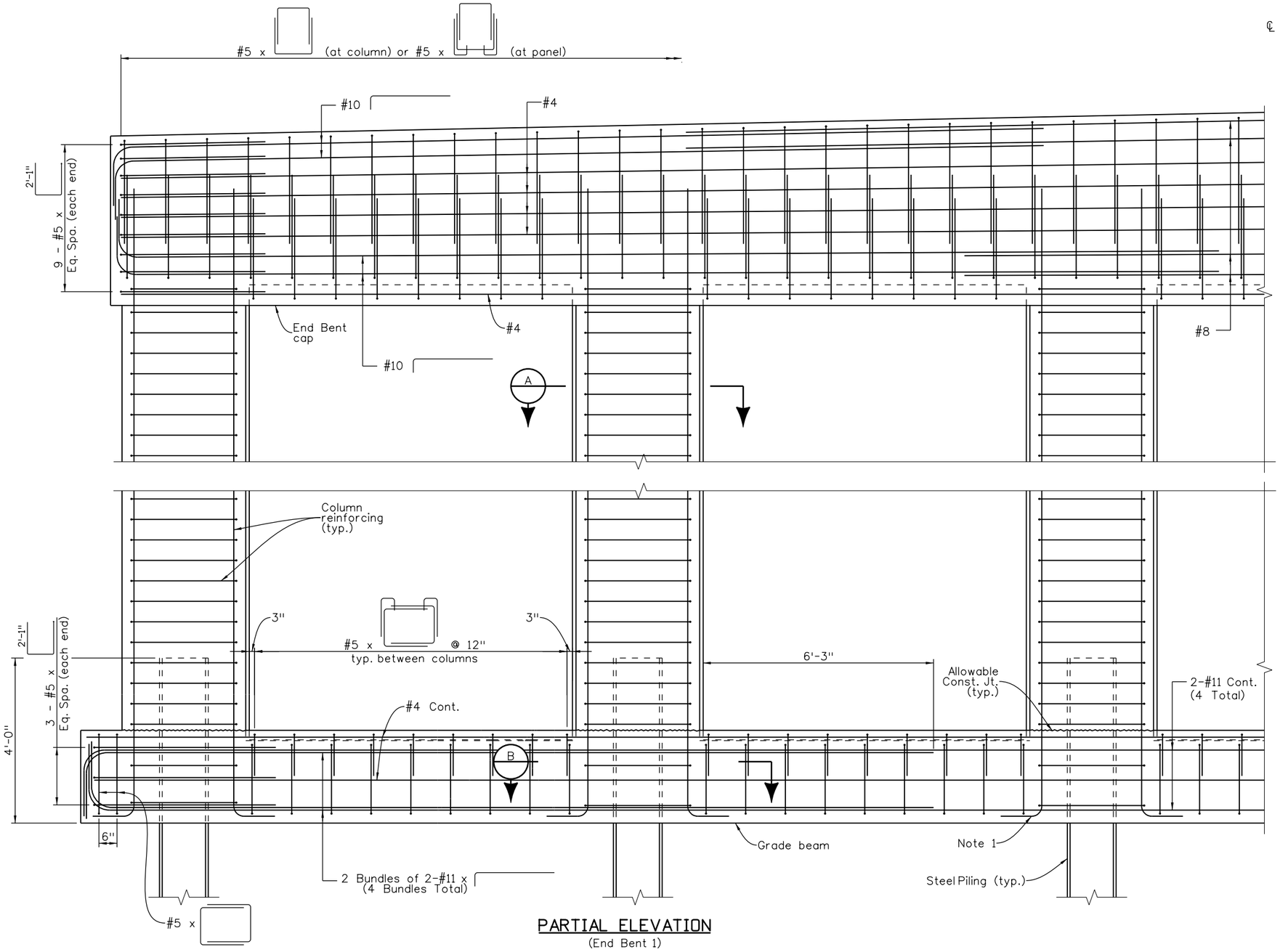

PARTIAL ELEVATION
(End Bent 1)

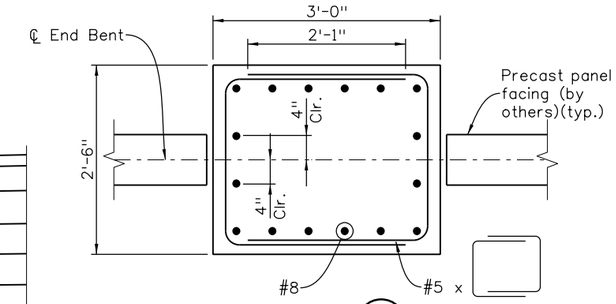

SECTION A

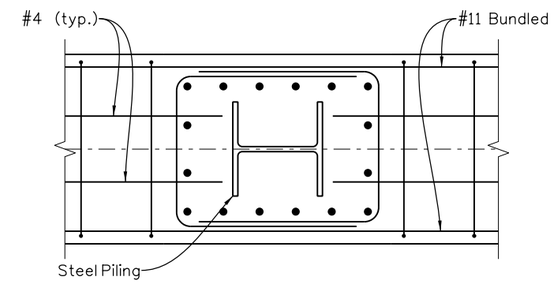

SECTION B

(Similar to Section A except as shown)

NOTES

1. Vertical Column Reinforcing in 2'-6" faces of columns shall be hooked into grade beam (8 hooked bars per column).
2. Minimum bar splice lengths for grade beam reinforcing at phase lines:
   #4 = 1'-10"
   #11 (top mat) = 10'-10"
   #11 (Bot. mat) = 9'-7"
3. Except where noted otherwise, lap splices of grade beam reinforcing shall be staggered and shall meet or exceed the following minimum lengths:
   #4 = 1'-3"
   #11 (top mat) = 8'-2"
   #11 (Bot. mat) = 7'-2"
4. Mechanical couplers may be used in lieu of lap splices.

Design	INITIAL	DATE	Detail	INITIAL	DATE	Quantities	INITIAL	DATE
Designed By	CCH	05/15	Detailed By	MJW	05/15	Quantities By	JWG	05/15
Checked By	CJK	05/15	Checked By	CCH	05/15	Checked By	CCH	05/15

P:\130335408 - I-70 over Havana DB\19339\Bridge\Drawings\19339BRDG_B120-25-EndBentDet.dgn
isaiah.quintana
6/29/2015 5:59:43 PM
DGN MODEL:sheet2

Print Date: 6/29/2015
File Name: 19339BRDG_B120-25-EndBentDet.dgn
Horiz. Scale: None Vert. Scale: None
Staff Bridge Branch - Unit 0224 AJP

TSIOUVARAS SIMMONS HOLDERNESS

Sheet Revisions		
Date:	Comments	Init.

Colorado Department of Transportation
4670 N. Holly
Denver, CO 80216
Phone: 303-398-6767 FAX: 303-398-6781
Region 1 KK

As Constructed
No Revisions:
Revised:
Void:

I-70 OVER HAVANA STREET DESIGN-BUILD
I-70 BRIDGE OVER HAVANA
END BENT 1 DETAILS (2 OF 2)

Designer: C. Hammond
Detailer: M. Welch
Sheet Subset: Bridge 1
Structure Numbers: E-17-VD
Subset Sheets: B21 of 45

Project No./Code
FBR 0704-230
19339
Sheet Number 59

RFC02 JUNE, 2015 (REVIEW)

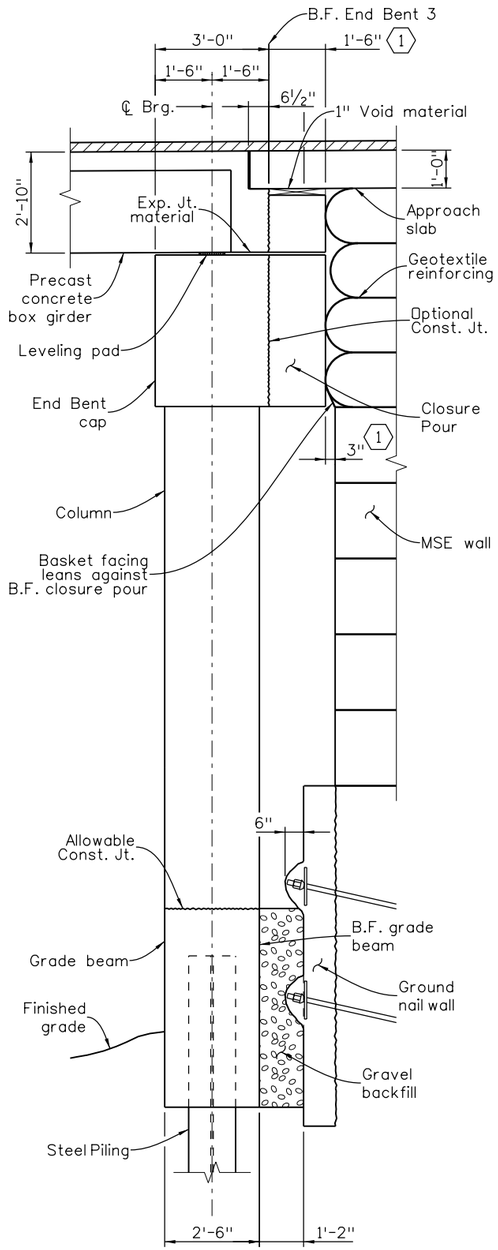

TYPICAL SECTION AT COLUMN

(End Bent 3)

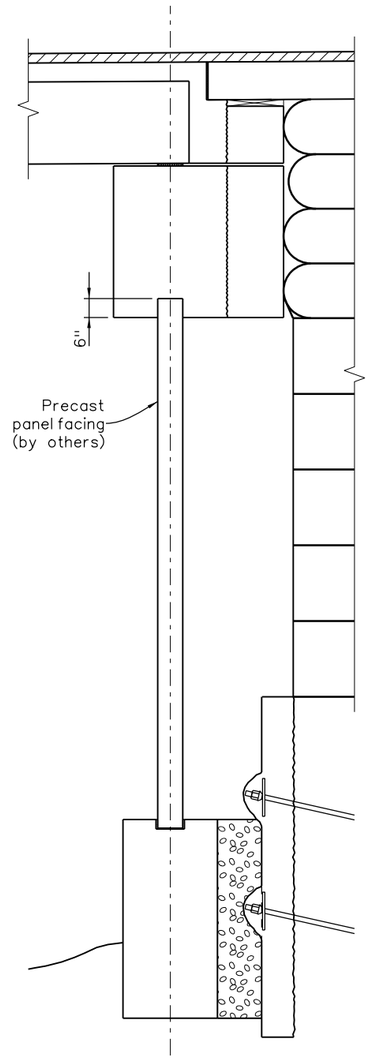

TYPICAL SECTION AT PANEL

(End Bent 3)
(Similar to "Typical Section at Column" except as noted)

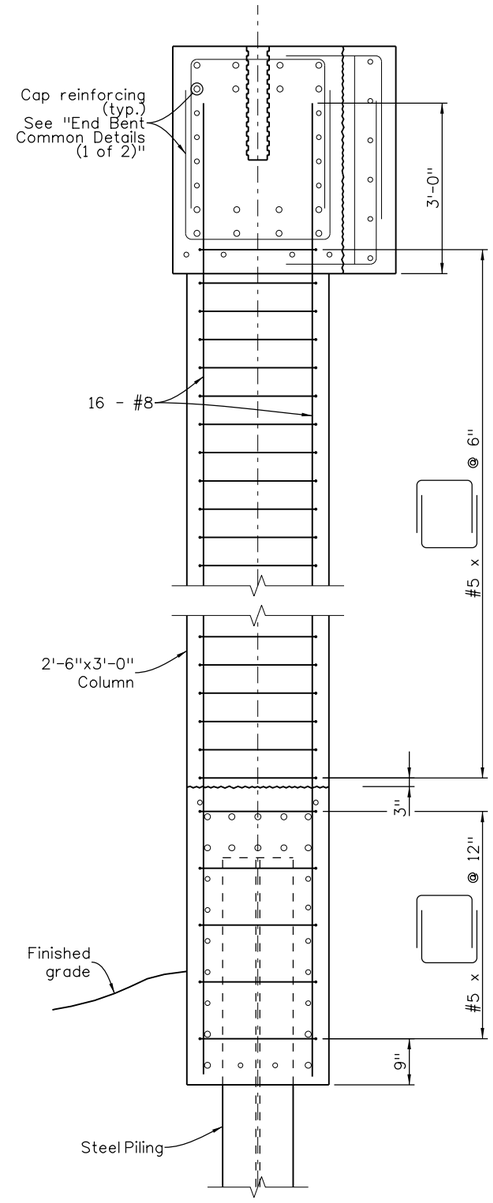

REINFORCING AT COLUMN

NOTES

1. Closure Pour behind End Bent Cap shall be poured prior to construction of MSE Wall adjacent to the End Bent Cap. B.F. Closure Pour shall be positioned 3" from proposed MSE Basket Facing. Closure Pour may be placed in same pour as End Bent Cap.
2. B.F. Closure Pour shall not be poured against bare earth.

KEY NOTES

(1) Location of B.F. of closure pour shall be verified with retaining wall design by Ground Engineering.

(2) Notch dimension assumes a panel thickness of 8". Actual notch dimension will vary depending on final panel thickness.

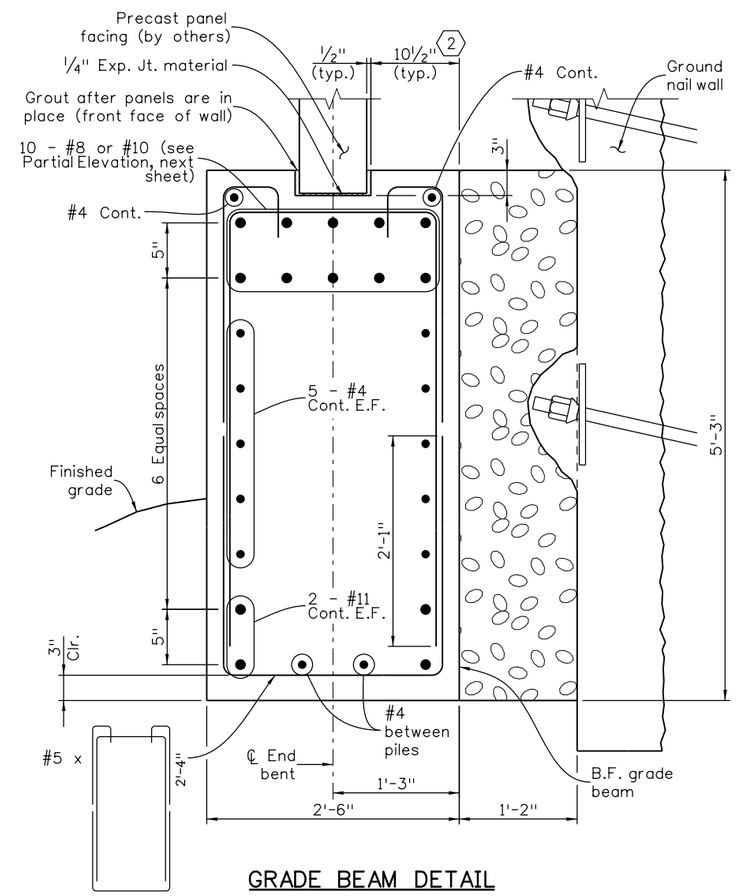

GRADE BEAM DETAIL

Design			Detail			Quantities		
	INITIAL	DATE		INITIAL	DATE		INITIAL	DATE
Designed By	CCH	05/15	Detailed By	MJW	05/15	Quantities By	JWG	05/15
Checked By	CJK	05/15	Checked By	CCH	05/15	Checked By	CCH	05/15

P:\13033540B - I-70 over Havana DB\19339\Bridge\Drawings\19339BRDG_B120-25-EndBentDet.dgn
isaiah.quintana
6/29/2015 5:59:45 PM
DGN MODEL:sheet3

RFC02 JUNE, 2015 (REVIEW)

Print Date: 6/29/2015
File Name: 19339BRDG_B120-25-EndBentDet.dgn
Horiz. Scale: None Vert. Scale: None
Staff Bridge Branch - Unit 0224 AJP

TSIOUVARAS SIMMONS HOLDERNESS

Sheet Revisions		
Date:	Comments	Init.

Colorado Department of Transportation
4670 N. Holly
Denver, CO 80216
Phone: 303-398-6767 FAX: 303-398-6781
Region 1 KK

As Constructed
No Revisions:
Revised:
Void:

I-70 OVER HAVANA STREET DESIGN-BUILD
I-70 BRIDGE OVER HAVANA
END BENT 3 DETAILS (1 OF 2)

Designer:	C. Hammond	Structure Numbers	E-17-VD
Detailer:	M. Welch		
Sheet Subset:	Bridge 1	Subset Sheets:	B22 of 45

Project No./Code
FBR 0704-230
19339
Sheet Number 60

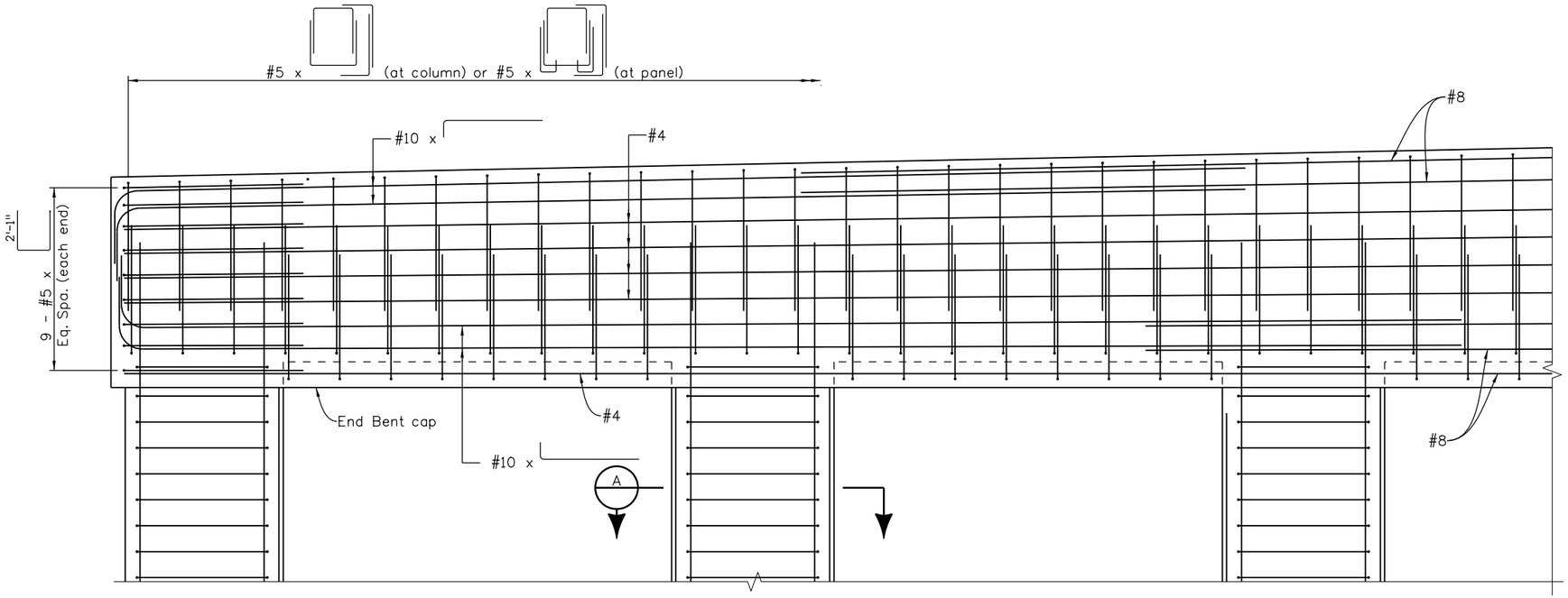

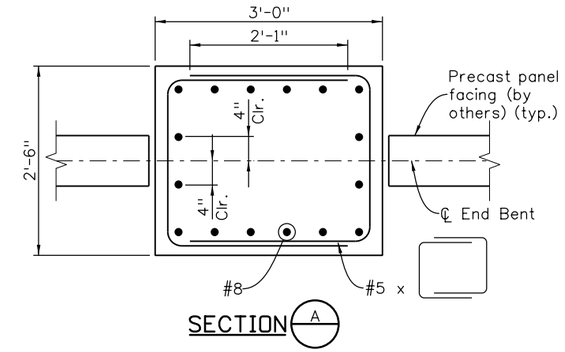

NOTES

1. Vertical Column Reinforcing in 2'-6" faces of columns shall be hooked into grade beam (8 hooked bars per column).
2. Minimum splice lengths for grade beam reinforcing at phase lines:
   #4 = 1'-10"
   #8 = 5'-7"
   #11 = 9'-7"
3. Except where noted otherwise, lap splices of grade beam reinforcing shall be staggered and shall meet or exceed the following minimum lengths:
   #4 = 1'-3"
   #8 = 4'-2"
   #11 = 7'-2"
4. Mechanical couplers may be used in lieu of lap splices.

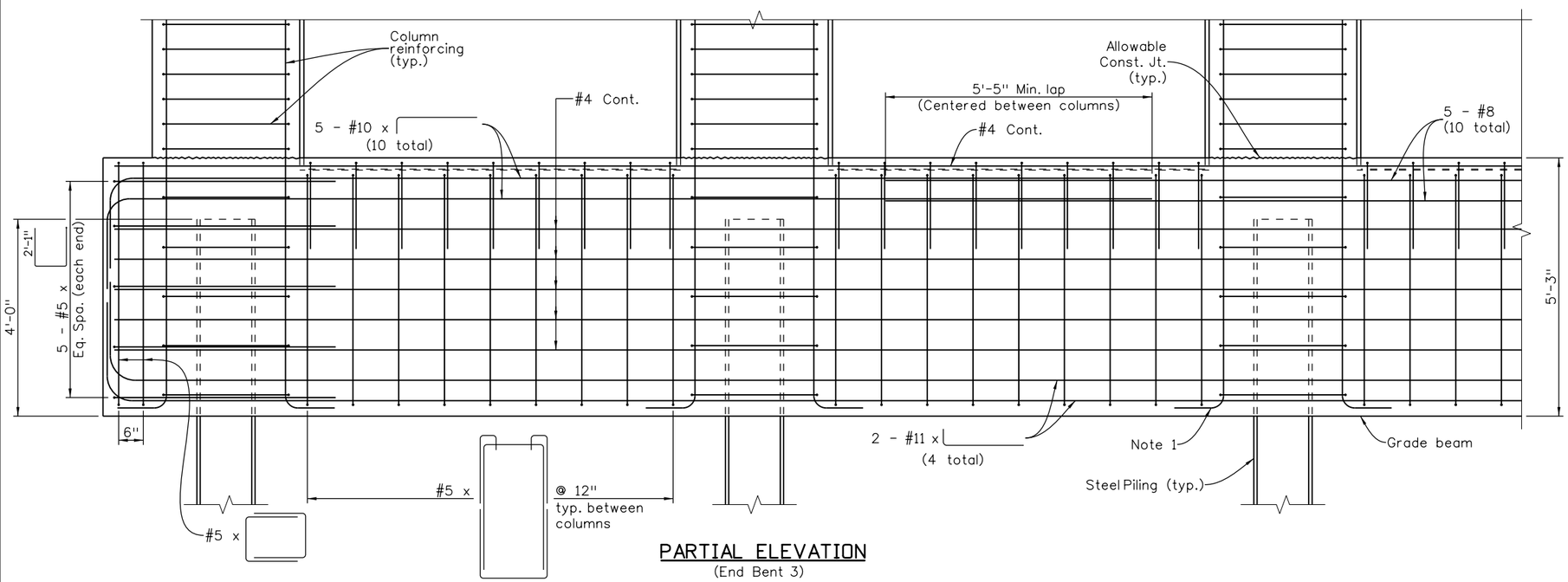

PARTIAL ELEVATION
(End Bent 3)

Design			Detail			Quantities		
	INITIAL	DATE		INITIAL	DATE		INITIAL	DATE
Designed By	CCH	05/15	Detailed By	MJW	05/15	Quantities By	JWG	05/15
Checked By	CJK	05/15	Checked By	CCH	05/15	Checked By	CCH	05/15

P:\1303354DB - I-70 over Havana DB\19339\Bridge\Drawings\19339BRDG_B120-25-EndBentDet.dgn
isaiah.quintana
6/29/2015 5:59:46 PM
DGN MODEL:sheet4

Print Date: 6/29/2015
File Name: 19339BRDG_B120-25-EndBentDet.dgn
Horiz. Scale: None Vert. Scale: None
Staff Bridge Branch - Unit 0224 AJP
TSIOUVARAS SIMMONS HOLDERNESS

Sheet Revisions		
Date:	Comments	Init.

Colorado Department of Transportation
4670 N. Holly
Denver, CO 80216
Phone: 303-398-6767 FAX: 303-398-6781
Region 1 KK

As Constructed
No Revisions:
Revised:
Void:

I-70 OVER HAVANA STREET DESIGN-BUILD
I-70 BRIDGE OVER HAVANA
END BENT 3 DETAILS (2 OF 2)

Designer: C. Hammond
Detailer: M. Welch
Sheet Subset: Bridge 1
Structure Numbers: E-17-VD
Subset Sheets: B23 of 45

Project No./Code
FBR 0704-230
19339
Sheet Number 61

RFC02 JUNE, 2015 (REVIEW)

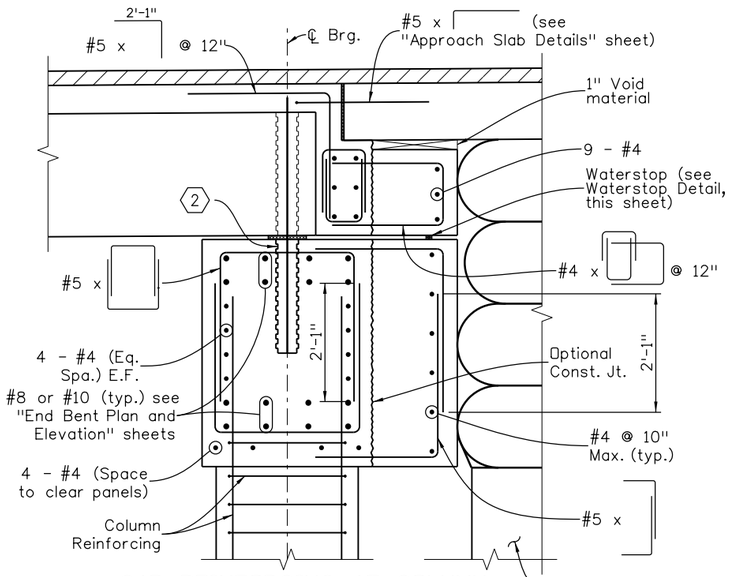

CAP REINFORCING AT COLUMN
(End Bent 3 shown, End Bent 1 similar)

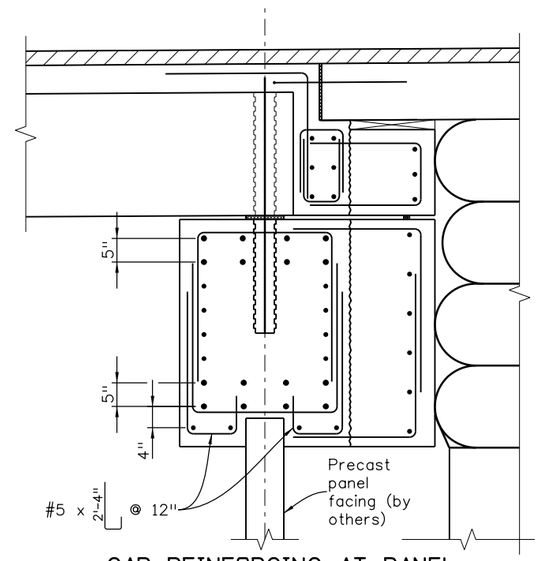

CAP REINFORCING AT PANEL
(Similar to Cap Reinforcing at Column, except as noted)

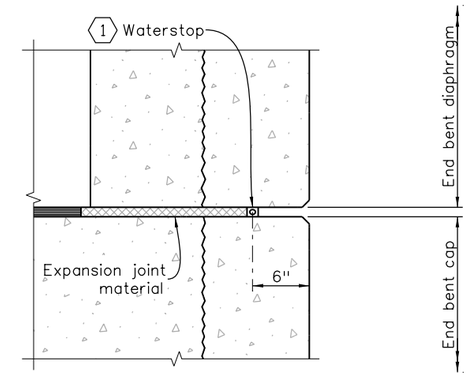

WATERSTOP DETAIL
(Reinforcing not shown for clarity)
(Apply full width)

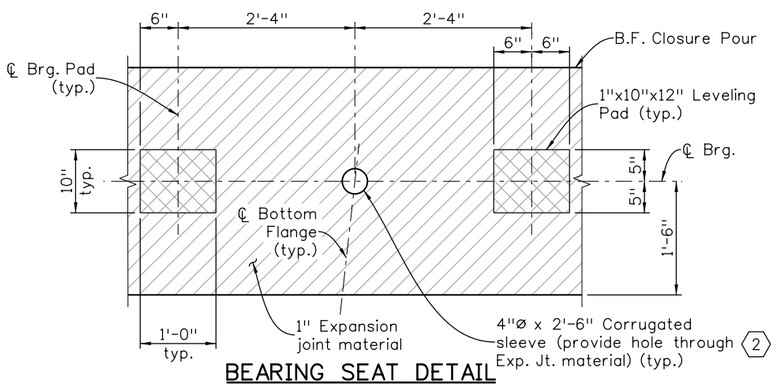

BEARING SEAT DETAIL

KEY NOTES

1. Installation of waterstop shall comply with manufacturer's recommendations.

2. 4" Ø Corrugated galvanized steel post-tensioning duct, 2'-6" long, placed in end bent cap. Provide one sleeve per girder at each end bent (total 36 each end bent). Protect sleeve from moisture and debris by covering or other means. After placement of girder, place #11 x 5'-0" dowel through sleeve provided in girder (project 2'-6"). Grout dowel in place with Engineer approved non-shrink grout. Sleeve shall be cleaned of dust and other foreign material immediately prior to placement of grout.

3. See "Bridge Rail Type 7" sheets for bridge rail reinforcing at end bents and pier.

NOTES

1. Closure pour reinforcing required at End Bent 3 only.

Design	INITIAL	DATE	Detail	INITIAL	DATE	Quantities	INITIAL	DATE
Designed By	CCH	05/15	Detailed By	MJW	05/15	Quantities By	JWG	05/15
Checked By	CJK	05/15	Checked By	CCH	05/15	Checked By	CCH	05/15

P:\130335ADB - I-70 over Havana DB\19339\Bridge\Drawings\19339BRDG_B120-25-EndBentDet.dgn
isaiah.quintana
6/29/2015 5:59:47 PM
DGN MODEL:sheet5

Print Date: 6/29/2015
File Name: 19339BRDG_B120-25-EndBentDet.dgn
Horiz. Scale: None Vert. Scale: None
Staff Bridge Branch - Unit 0224 AJP
TSIOUVARAS SIMMONS HOLDERNESS

Sheet Revisions		
Date:	Comments	Init.

Colorado Department of Transportation
4670 N. Holly
Denver, CO 80216
Phone: 303-398-6767 FAX: 303-398-6781
Region 1 KK

As Constructed
No Revisions:
Revised:
Void:

I-70 OVER HAVANA STREET DESIGN-BUILD
I-70 BRIDGE OVER HAVANA
END BENT COMMON DETAILS (1 OF 2)

Designer:	C. Hammond	Structure Numbers	E-17-VD
Detailer:	M. Welch		
Sheet Subset:	Bridge 1	Subset Sheets:	B24 of 45

Project No./Code
FBR 0704-230
19339
Sheet Number 62

RFC02 JUNE, 2015 (REVIEW)

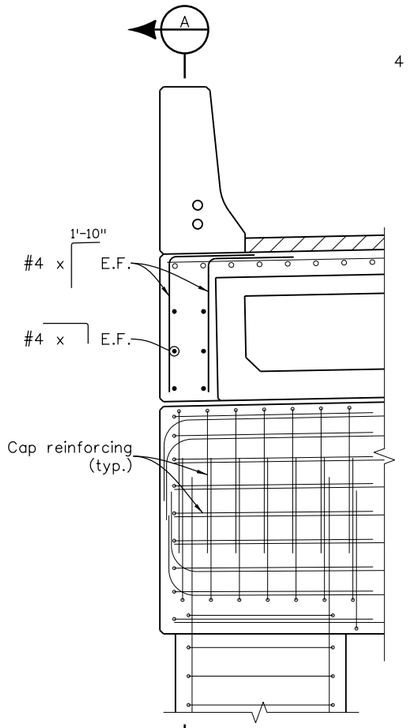

DECK OVERHANG AT END BENT DETAIL
(Bridge rail reinforcing not shown for clarity)

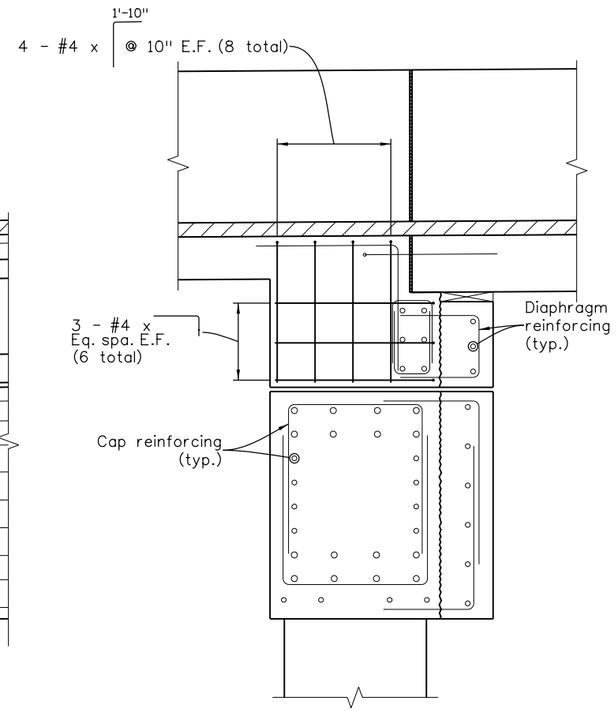

SECTION A
(Bridge rail reinforcing not shown for clarity)

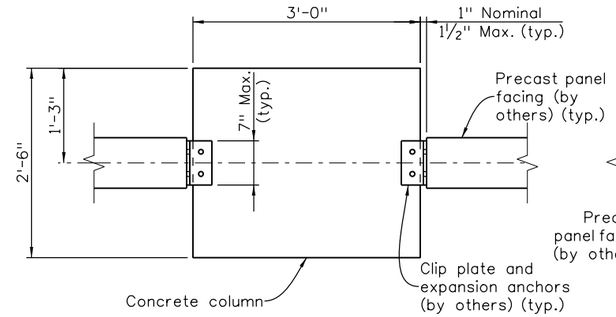

PLAN - TOP OF WALL CONNECTION TO COLUMN
(prior to end bent cap pour)

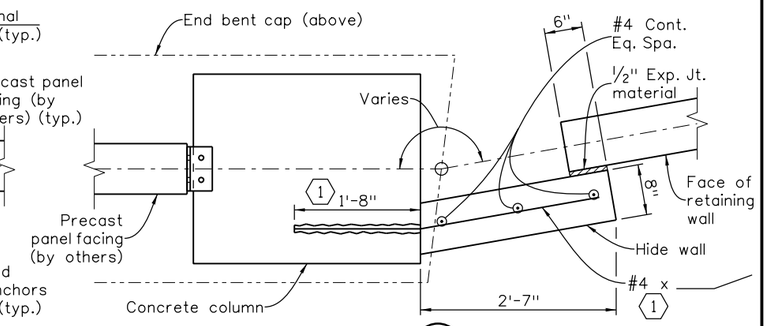

SECTION B
(at transition from end bent to MSE wall)

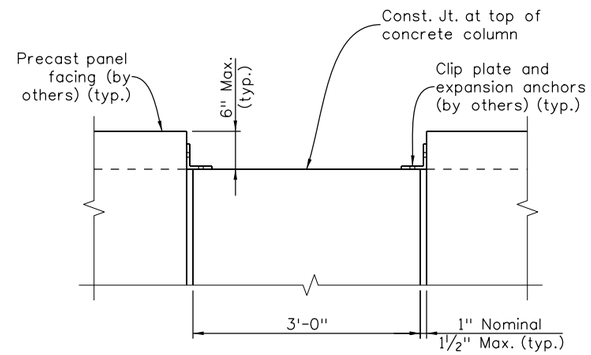

ELEVATION - TOP OF WALL CONNECTION TO COLUMN
(prior to bent cap pour)

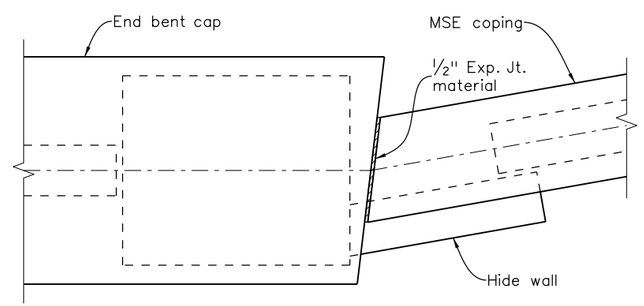

SECTION C
(at transition from end bent to MSE coping)

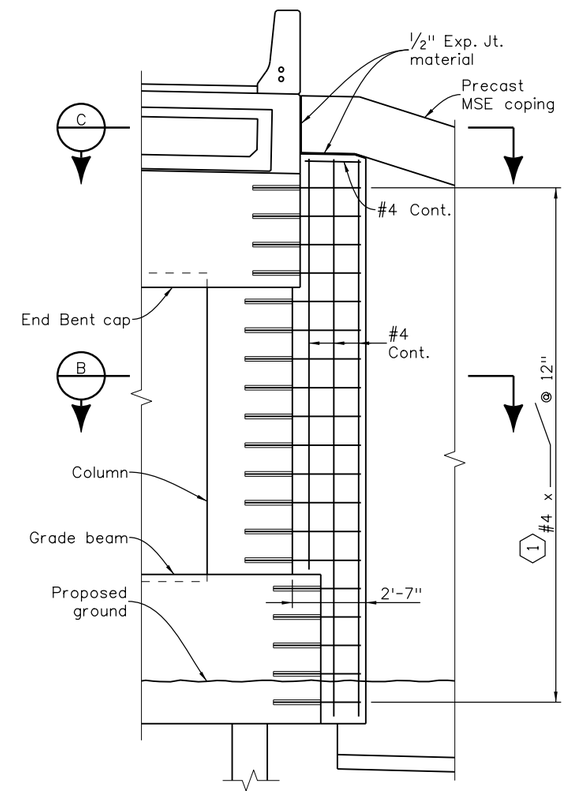

ELEVATION - HIDE WALL

KEY NOTES

(1) Drill Grade Beam, Column, and End Bent Cap. Epoxy Reinforcing into Grade Beam, Column, and End Bent Cap. Embed 1'-8" into Grade Beam, Column, and End Bent Cap.

Design			Detail			Quantities		
	INITIAL	DATE		INITIAL	DATE		INITIAL	DATE
Designed By	CCH	05/15	Detailed By	MJW	05/15	Quantities By	JWG	05/15
Checked By	CJK	05/15	Checked By	CCH	05/15	Checked By	CCH	05/15

P:\303354DB - I-70 over Havana DB\19339\Bridge\Drawings\19339BRDG_B120-25-EndBentDet.dgn
DGN MODEL:sheet6
6/29/2015 5:59:48 PM
isaiah.quintana

RFC02 JUNE, 2015 (REVIEW)

Print Date: 6/29/2015
File Name: 19339BRDG_B120-25-EndBentDet.dgn
Horiz. Scale: None Vert. Scale: None
Staff Bridge Branch - Unit 0224 AJP

TSIOUVARAS SIMMONS HOLDERNESS

Sheet Revisions		
Date:	Comments	Init.

Colorado Department of Transportation
4670 N. Holly
Denver, CO 80216
Phone: 303-398-6767 FAX: 303-398-6781
Region 1 KK

As Constructed
No Revisions:
Revised:
Void:

I-70 OVER HAVANA STREET DESIGN-BUILD
I-70 BRIDGE OVER HAVANA
END BENT COMMON DETAILS (2 OF 2)

Designer: C. Hammond
Detailer: M. Welch
Structure Numbers: E-17-VD
Sheet Subset: Bridge 1
Subset Sheets: B25 of 45

Project No./Code
FBR 0704-230
19339
Sheet Number 63

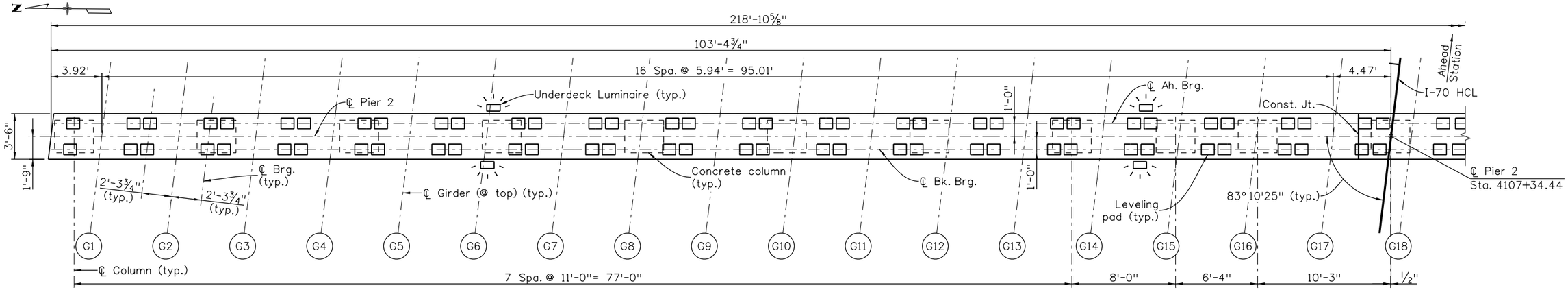

PLAN

(Reinforcing not shown)

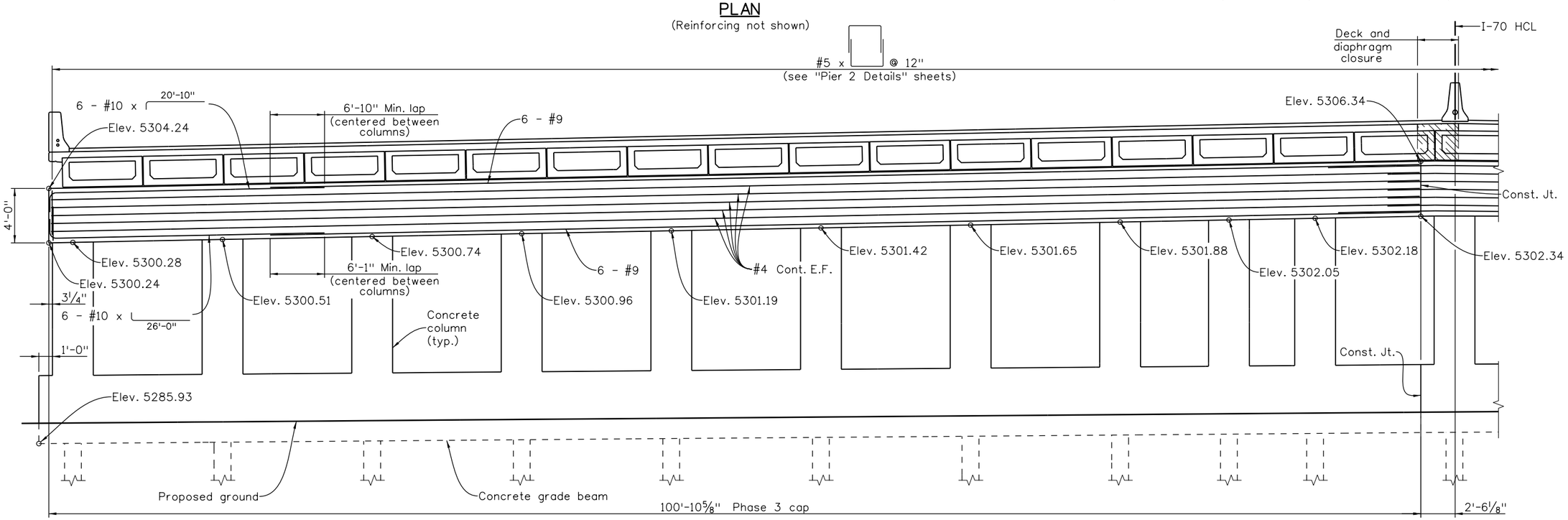

ELEVATION

(Looking ahead station, taken parallel to ℄ Pier 2)
(Reinforcing for deck, bridge rails, columns and grade beam not shown)

NOTES

1. Pier shall be Concrete Class D (Bridge).
2. For additional information see "Pier 2 Details" sheets.
3. Minimum splice length at phase lines:
   #4 = 1'-10"
   #9 (top mat) = 6'-10"
   #9 = 6'-1"
4. Except where noted otherwise, laps of pier cap reinforcing shall be staggered and shall meet or exceed the following minimum lengths:
   #4 = 1'-3"
   #9 (top mat) = 5'-3"
   #9 (Bot. mat) = 4'-8"
5. Mechanical couplers may be used in lieu of lap splices.
6. Top of column elevations shown are at ℄ Column and ℄ Pier.

Quantities	INITIAL	DATE
Quantities By	JWG	05/15
Checked By	CCH	05/15

Detail	INITIAL	DATE
Detailed By	MJW	05/15
Checked By	CCH	05/15

Design	INITIAL	DATE
Designed By	CCH	05/15
Checked By	CJK	05/15

P:\1303354DB - I-70 over Havana DB\19339\Bridge\Drawings\19339BRDG_B126-27-Pier2PlanElev.dgn
isaiah.quintana
6/29/2015 5:59:50 PM
DGN MODEL:sheet1

Print Date: 6/29/2015
File Name: 19339BRDG_B126-27-Pier2PlanElev.dgn
Horiz. Scale: None Vert. Scale: None
Staff Bridge Branch - Unit 0224 AJP

TSIOUVARAS SIMMONS HOLDERNESS

Sheet Revisions		
Date:	Comments	Init.

Colorado Department of Transportation
4670 N. Holly
Denver, CO 80216
Phone: 303-398-6767 FAX: 303-398-6781
Region 1 KK

As Constructed
No Revisions:
Revised:
Void:

I-70 OVER HAVANA STREET DESIGN-BUILD
I-70 BRIDGE OVER HAVANA
PIER 2 PLAN AND ELEVATION (1 OF 2)

Designer:	C. Hammond	Structure Numbers	E-17-VD
Detailer:	M. Welch		
Sheet Subset:	Bridge 1	Subset Sheets:	B26 of 45

Project No./Code
FBR 0704-230
19339
Sheet Number 64

RFC02 JUNE, 2015 (REVIEW)

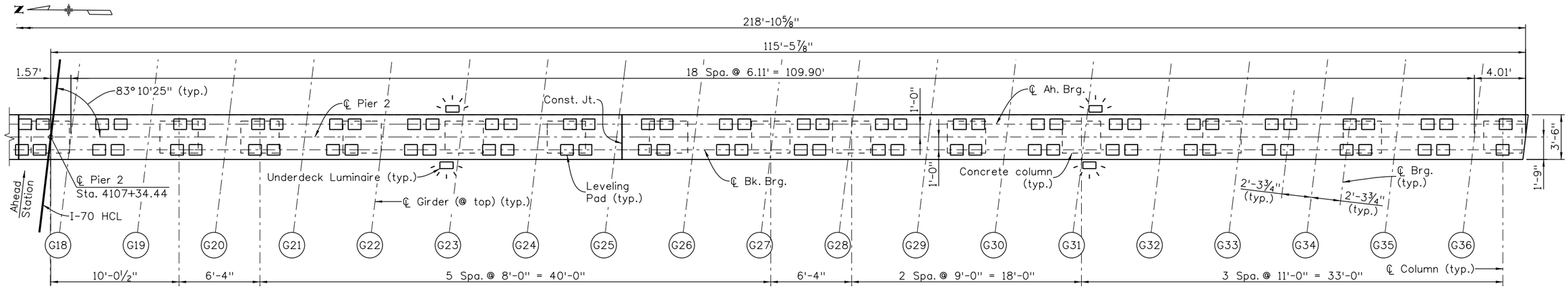

PLAN

(Reinforcing not shown)

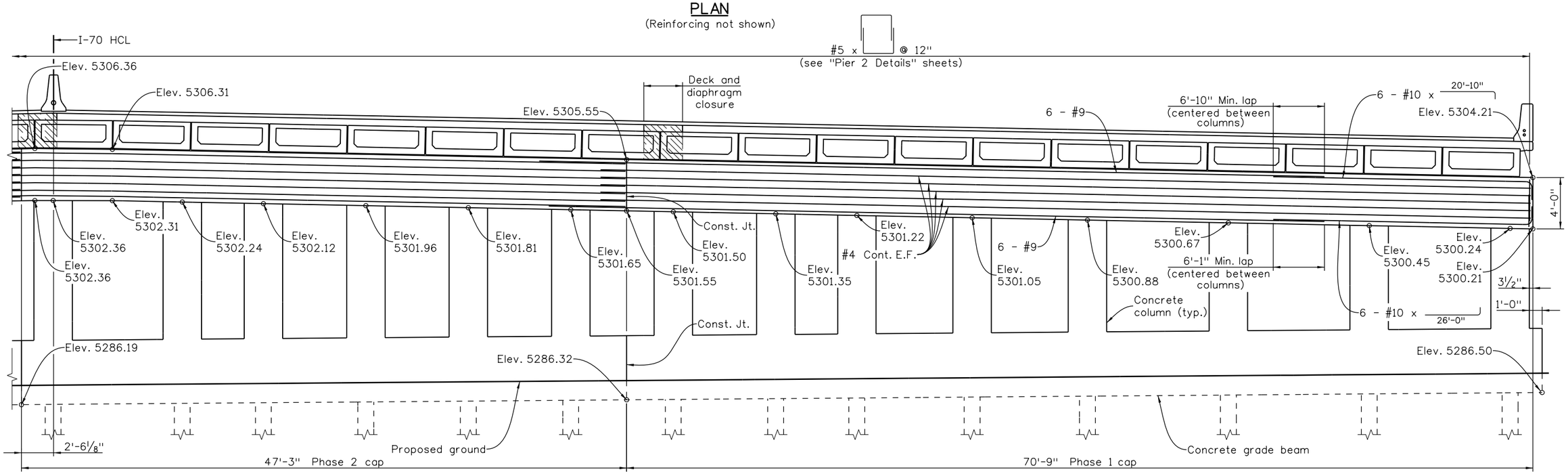

ELEVATION

(Looking ahead station, taken parallel to ℄ Pier 2)
(Reinforcing for deck, bridge rails, columns and grade beam not shown)

NOTES

1. Pier shall be Concrete Class D (Bridge).
2. For additional information see "Pier 2 Details" sheets.
3. Minimum splice length at phase lines:
   #4 = 1'-10"
   #9 (top mat) = 6'-10"
   #9 = 6'-1"
4. Except where noted otherwise, laps of pier cap reinforcing shall be staggered and shall meet or exceed the following minimum lengths:
   #4 = 1'-3"
   #9 (top mat) = 5'-3"
   #9 (Bot. mat) = 4'-8"
5. Mechanical couplers may be used in lieu of lap splices.
6. Top of column elevations shown are at ℄ Column and ℄ Pier.

Design	INITIAL	DATE
Designed By	CCH	05/15
Checked By	CJK	05/15

Detail	INITIAL	DATE
Detailed By	MJW	05/15
Checked By	CCH	05/15

Quantities	INITIAL	DATE
Quantities By	JWG	05/15
Checked By	CCH	05/15

P:\1303354DB - I-70 over Havana DB\19339\Bridge\Drawings\19339BRDG_B126-27-Pier2PlanElev.dgn
isaiah.quintana 6/29/2015 5:59:51 PM DGN MODEL:sheet2

Print Date: 6/29/2015
File Name: 19339BRDG_B126-27-Pier2PlanElev.dgn
Horiz. Scale: None Vert. Scale: None
Staff Bridge Branch - Unit 0224 AJP

TSIOUVARAS SIMMONS HOLDERNESS

Sheet Revisions		
Date:	Comments	Init.

Colorado Department of Transportation
4670 N. Holly
Denver, CO 80216
Phone: 303-398-6767 FAX: 303-398-6781
Region 1 KK

As Constructed
No Revisions:
Revised:
Void:

I-70 OVER HAVANA STREET DESIGN-BUILD
I-70 BRIDGE OVER HAVANA
PIER 2 PLAN AND ELEVATION (2 OF 2)

Designer: C. Hammond
Detailer: M. Welch
Sheet Subset: Bridge 1
Structure Numbers: E-17-VD
Subset Sheets: B27 of 45

Project No./Code
FBR 0704-230
19339
Sheet Number 65

RFC02 JUNE, 2015 (REVIEW)

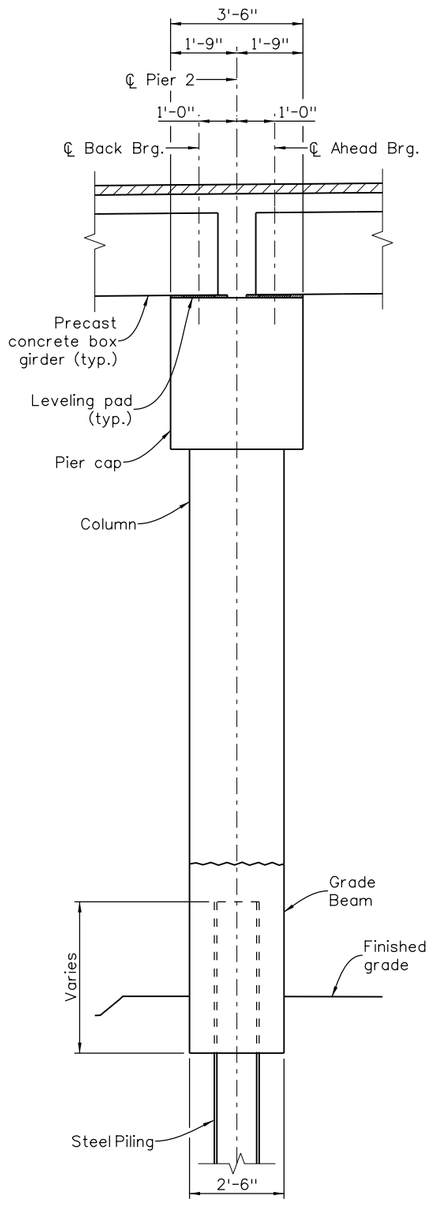

TYPICAL SECTION AT COLUMN

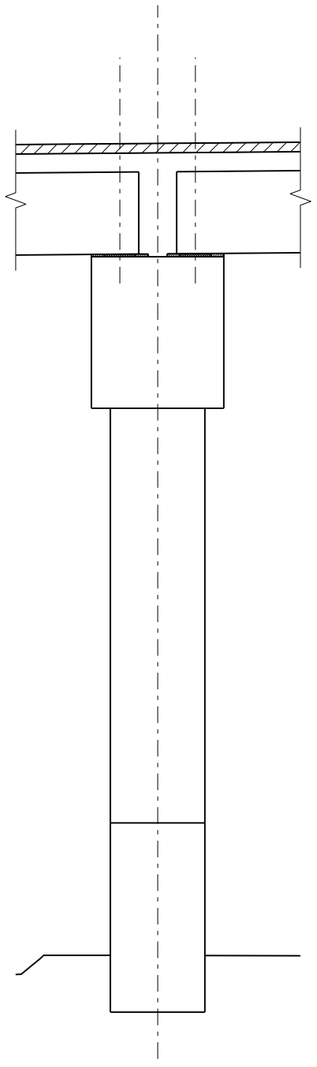

TYPICAL SECTION BETWEEN COLUMNS
(similar to "Typical Section at Column" except as noted)

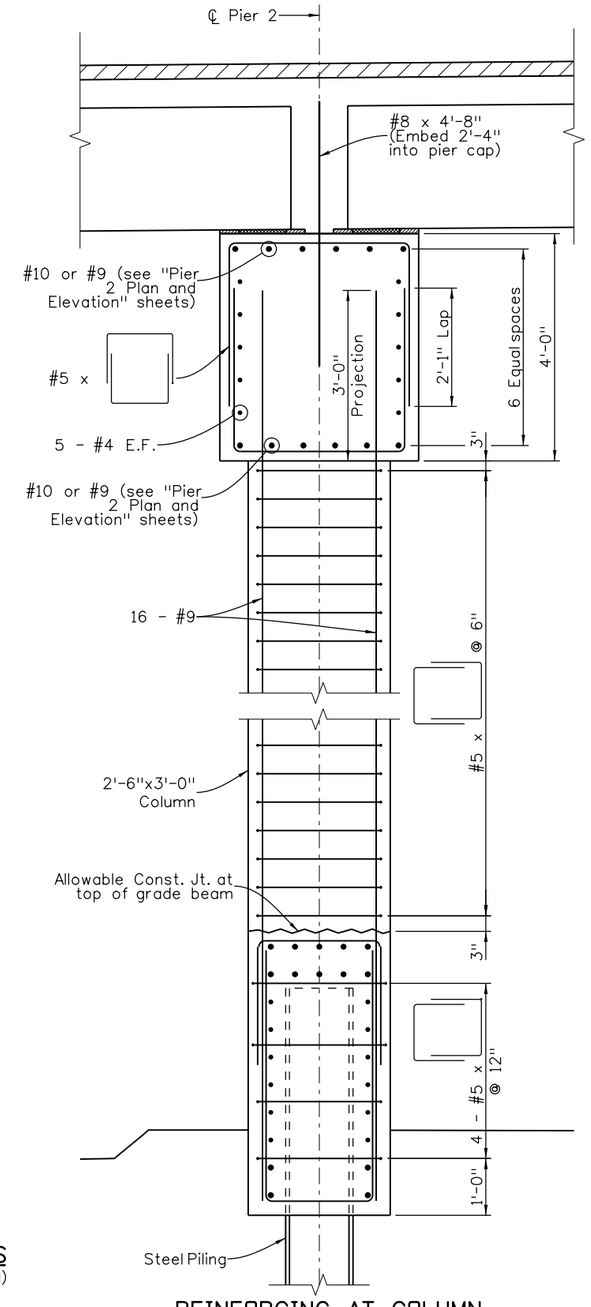

REINFORCING AT COLUMN

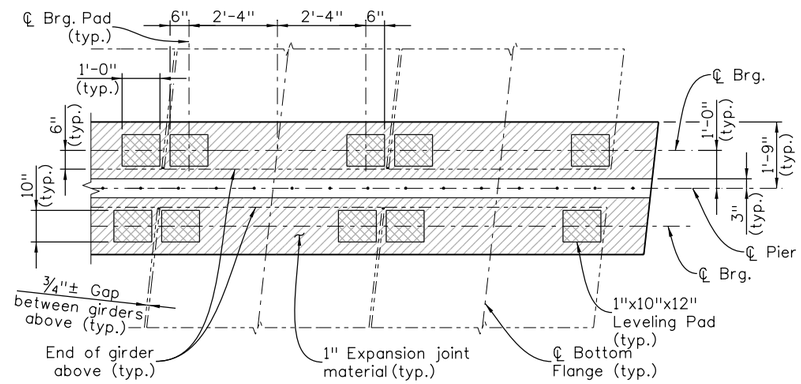

BEARING SEAT DETAIL

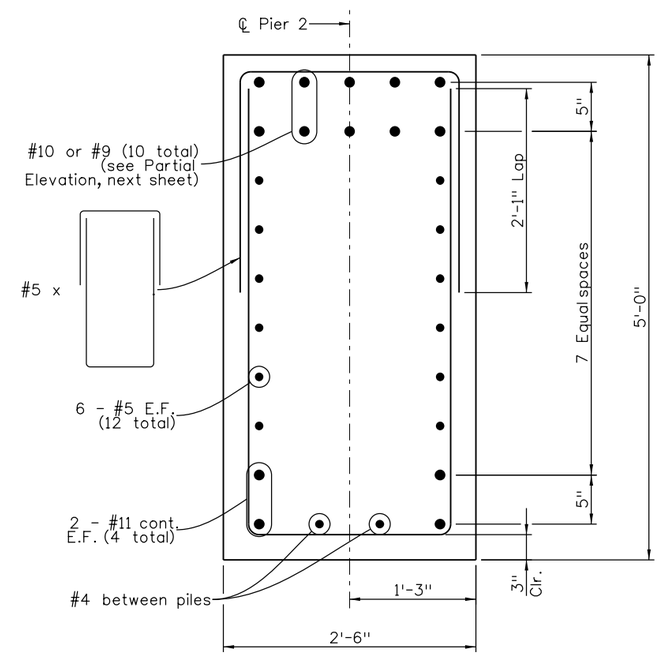

GRADE BEAM DETAIL

KEY NOTES

(1) See "Bridge Rail Type 7" sheets for bridge rail reinforcing at end bents and pier.

Design	INITIAL	DATE	Detail	INITIAL	DATE	Quantities	INITIAL	DATE
Designed By	CCH	05/15	Detailed By	MJW	05/15	Quantities By	JWG	05/15
Checked By	CJK	05/15	Checked By	CCH	05/15	Checked By	CCH	05/15

P:\1303354DB - I-70 over Havana DB\19339\Bridge\Drawings\19339BRDG_B128-29-Pier2Det.dgn
DGN MODEL:sheet1
6/29/2015 5:59:53 PM
isaiah.quintana

Print Date: 6/29/2015
File Name: 19339BRDG_B128-29-Pier2Det.dgn
Horiz. Scale: None Vert. Scale: None
Staff Bridge Branch - Unit 0224 AJP

TSIOUVARAS SIMMONS HOLDERNESS

Sheet Revisions		
Date:	Comments	Init.

Colorado Department of Transportation
4670 N. Holly
Denver, CO 80216
Phone: 303-398-6767 FAX: 303-398-6781
Region 1 KK

As Constructed
No Revisions:
Revised:
Void:

I-70 OVER HAVANA STREET DESIGN-BUILD
I-70 BRIDGE OVER HAVANA
PIER 2 DETAILS (1 OF 2)

Designer: C. Hammond
Detailer: M. Welch
Structure Numbers: E-17-VD
Sheet Subset: Bridge 1
Subset Sheets: B28 of 45

Project No./Code
FBR 0704-230
19339
Sheet Number 66

RFC02 JUNE, 2015 (REVIEW)

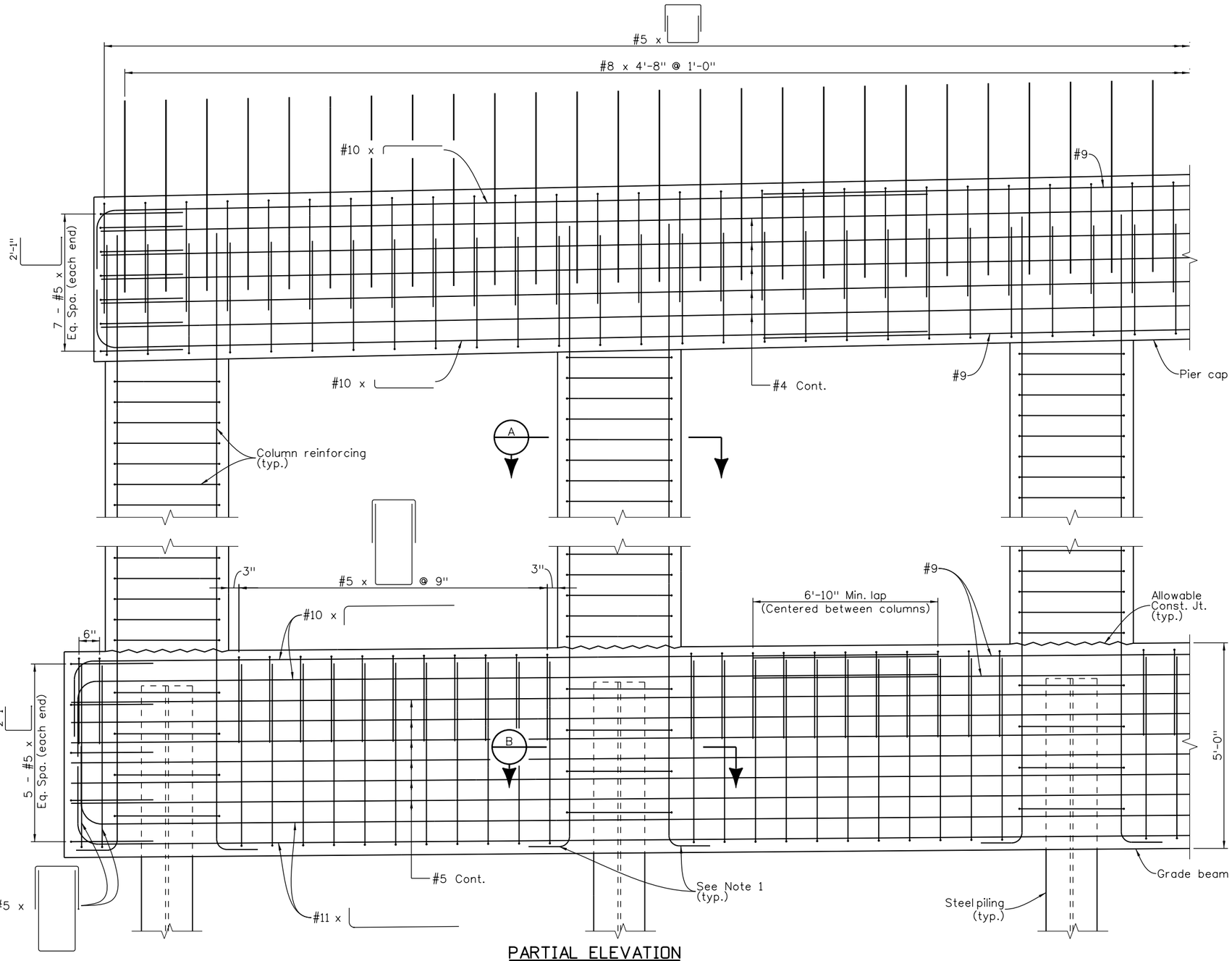

PARTIAL ELEVATION

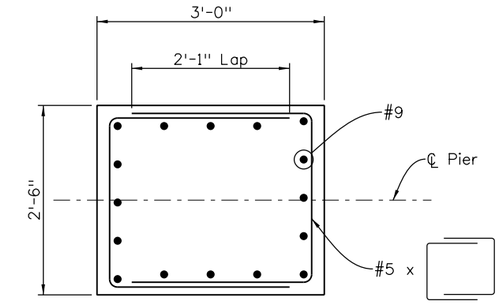

SECTION A

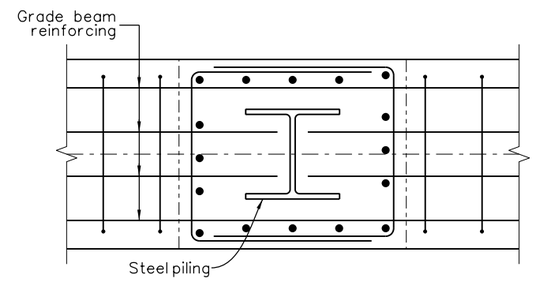

SECTION B

(Similar to Section A except as shown)

NOTES

1. Vertical column reinforcing in 2'-6" faces of columns shall be hooked into grade beam (10 hooked bars per column). Hook length may be reduced to maintain 2" clear cover where necessary.

2. Minimum splice length for grade beam reinforcing at phase lines:
   #11 = 9'-5"
   #9 = 8'-7"
   #5 = 3'-0"

3. Except where noted otherwise, laps of grade beam reinforcing shall be staggered and shall meet or exceed the following minimum lengths:
   #5 = 2'-3"
   #9 = 5'-3"
   #11 = 7'-3"

4. Mechanical couplers may be used in lieu of lap splices.

Design			Detail			Quantities		
	INITIAL	DATE		INITIAL	DATE		INITIAL	DATE
Designed By	CCH	05/15	Detailed By	MJW	05/15	Quantities By	JWG	05/15
Checked By	CJK	05/15	Checked By	CCH	05/15	Checked By	CCH	05/15

P:\130354DB - I-70 over Havana DB\19339\Bridge\Drawings\19339BRDG_B128-29-Pier2Det.dgn
DGN MODEL:sheet2
6/29/2015 5:59:54 PM
isaiah.quintana

Print Date: 6/29/2015
File Name: 19339BRDG_B128-29-Pier2Det.dgn
Horiz. Scale: None Vert. Scale: None
Staff Bridge Branch - Unit 0224 AJP

TSIOUVARAS SIMMONS HOLDERNESS

Sheet Revisions		
Date:	Comments	Init.

Colorado Department of Transportation
4670 N. Holly
Denver, CO 80216
Phone: 303-398-6767 FAX: 303-398-6781
Region 1 KK

As Constructed
No Revisions:
Revised:
Void:

I-70 OVER HAVANA STREET DESIGN-BUILD
I-70 BRIDGE OVER HAVANA
PIER 2 DETAILS (2 OF 2)

Designer: C. Hammond
Detailer: M. Welch
Sheet Subset: Bridge 1
Structure Numbers: E-17-VD
Subset Sheets: B29 of 45

Project No./Code
FBR 0704-230
19339
Sheet Number 67

RFC02 JUNE, 2015 (REVIEW)

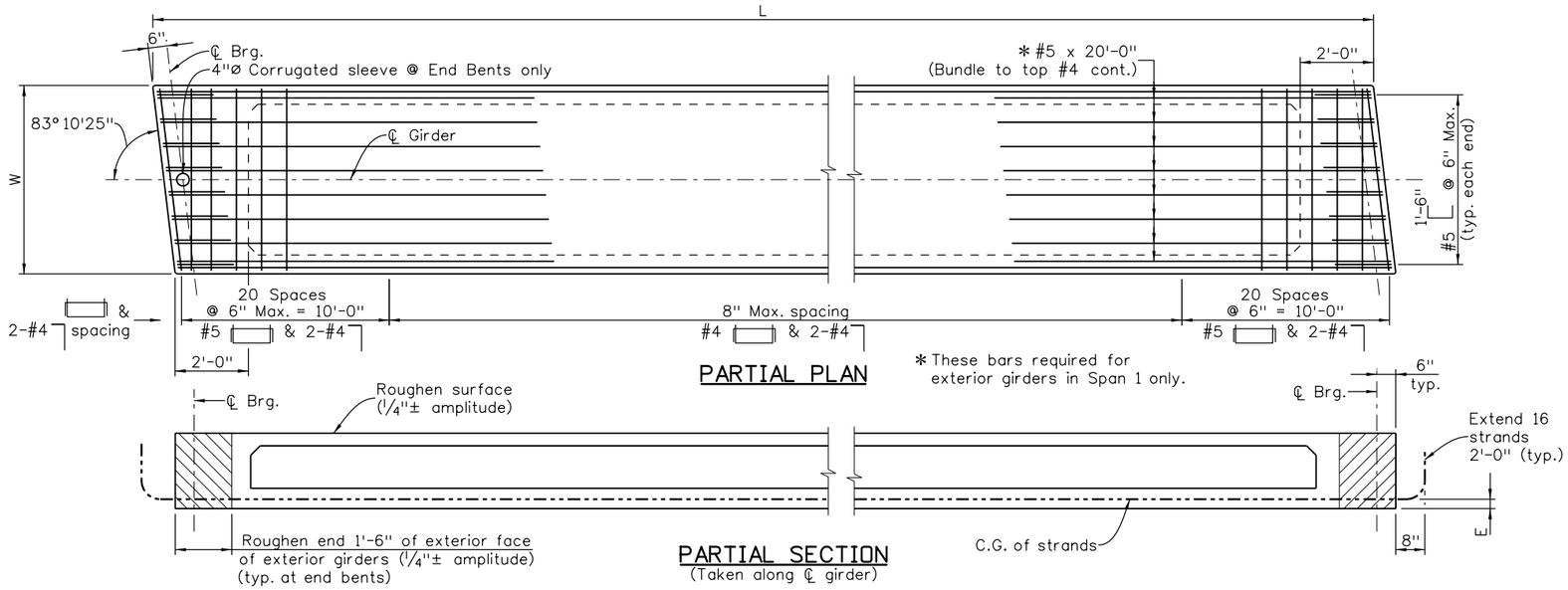

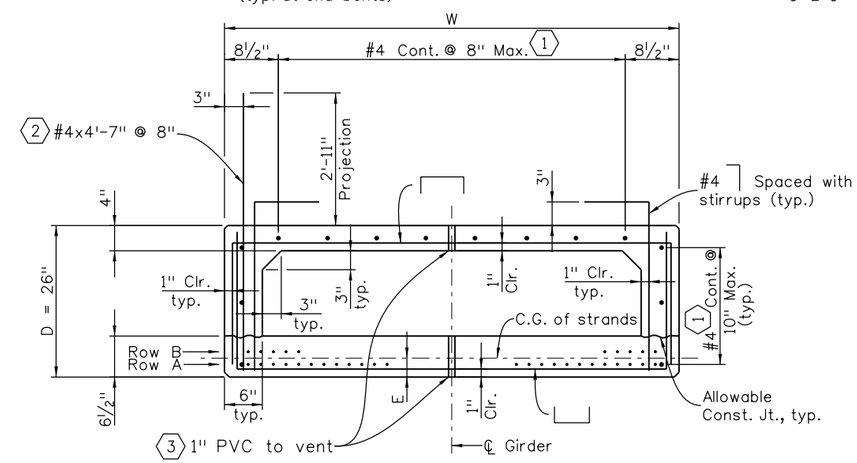

TYPICAL SECTION

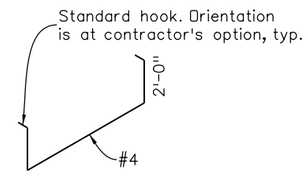

BAR A ISOMETRIC VIEW
(Bundle with stirrups for 14 feet at each end of girder)

KEY NOTES

(1) Lightly tensioned strands may be used as an alternate.

(2) Bridge rail reinforcing, exterior web of exterior girders only. Reinforcing shall be field bent. Epoxy coating on bar ends shall be repaired if trimming is required.

(3) Contractor to determine final location of PVC.

GIRDER SCHEDULE

Span No.	Girder No.	L (ft)	W (in)	As (in²)	Debonded Strands - Row A	Debonded Strands - Row B	E (in)	F_j (Kips)	F_f (Kips)	Concrete f'_{ci} (psi)	Concrete f'_c (psi)	Δ (in)	Predicted Release Camber (in)	Predicted Camber (in)
1	1	89.00	70	11.284	2 ea. @ 3', 6', 9', 12'	2 ea. @ 15'	3.250	2,285	1,953	6,500	8,500	3.94	3.24	7.19
1	2-17	89.00	70	11.284	2 ea. @ 3', 6', 9', 12'	2 ea. @ 15'	3.250	2,285	1,927	6,500	8,500	3.94	3.24	7.19
1	18-35	89.00	72	11.718	2 ea. @ 3', 6', 9', 12'	2 ea. @ 15'	3.287	2,373	1,985	6,500	8,500	3.94	3.30	7.31
1	36	89.00	72	11.718	2 ea. @ 3', 6', 9', 12'	2 ea. @ 15'	3.287	2,373	2,023	6,500	8,500	3.94	3.30	7.31
2	1	66.00	70	6.510	2 ea. @ 3', 6'	-	2.783	1,318	1,149	6,500	8,500	1.17	1.33	2.85
2	2-17	66.00	70	6.510	2 ea. @ 3', 6'	-	2.783	1,318	1,140	6,500	8,500	1.17	1.33	2.85
2	18-35	66.00	72	6.510	2 ea. @ 3', 6'	-	2.783	1,318	1,141	6,500	8,500	1.17	1.28	2.74
2	36	66.00	72	6.510	2 ea. @ 3', 6'	-	2.783	1,318	1,153	6,500	8,500	1.17	1.28	2.74

Release Strength (psi)	Support Location (ft)
6,500	2.00
6,750	4.00
7,000	6.00
7,250	7.50
7,500	9.50

NOTES

1. When approved by the Engineer, a minimum of tack welding will be permitted on ASTM A706 uncoated reinforcing steel.
2. Reinforcing projecting from the top of the girder and reinforcing within eight feet of the end bents shall be epoxy coated. Damaged coating on girder reinforcing need not be repaired. Damaged coating on projecting reinforcing shall be repaired.
3. The minimum cover for reinforcing steel is 1".
4. Welded wire fabric may be used with D20 wires in lieu of the #4 bars shown.
5. At girder ends embedded in concrete diaphragms, cut strands to project 3", except as shown. Do not make cosmetic repairs (damage less than 1½" deep) to the parts of the girders embedded in concrete.
6. Use low relaxation strands meeting the requirements of ASTM A-416 Grade 270. The minimum clear distance between groups or individual strands shall be 2.3(d_s) but not less than 1¼".
7. The minimum cover for prestressing steel is 1½".
8. A_s* = Minimum area of the prestressing steel
   d_s = Nominal strand diameter
   f^s = Ultimate strength of prestressing steel
   F_j = Jacking force per girder
   F_f = Final force per girder after all losses
   f'_{ci} = Required concrete strength at release of prestress force.
   f'_c = Required concrete strength at 28 days of age.
   L = Length of girder along the grade of the girder.
   Δ = Deflection at centerline of span due to cast-in-place slab, diaphragms, asphalt, and rails
9. Concrete shall be Class PS.
10. Entrained air is not required for girder concrete.
11. End blocks shall be used on all girders unless otherwise noted.
12. Use ½" chamfer on all corners, except as noted.
13. Predicted camber is the camber for the girder alone at 90 days. The Contractor shall limit the camber growth to a value not to exceed the predicted camber plus 1" prior to the deck pour by weighting, scheduling fabrication, post tensioning, or other means and must report to the Engineer values of camber which exceed the predicted camber plus 1". Remedial measures, as approved by the Engineer, shall be taken if the predicted camber plus 1" is exceeded. The approved remedial measures shall be free of any adverse impact. The costs associated with all remedial measures shall be borne by the Contractor.
14. Depth (D) tolerance shall be +½", -¼".
15. The Contractor is responsible for determining necessary bracing requirements, and for providing adequate bracing for the specific wind and weather conditions to be encountered.
16. Extended strands shall be fully bonded strands only.
17. The elapsed time between casting girders and placement of deck concrete shall be a minimum of 30 days.
18. Contractor shall measure and provide Engineer with concrete cylinder break test results and surveyed camber values at release.
19. For exterior girders in span 1 only: If observed release camber is less than 80% of predicted release camber, girder shall be stored on supports located a distance as specified in the Support Location Table from the end of girder.

RFC02 JUNE, 2015 (REVIEW)

Design	INITIAL	DATE	Detail	INITIAL	DATE	Quantities	INITIAL	DATE
Designed By	MAG	05/15	Detailed By	MJW	05/15	Quantities By	JWG	05/15
Checked By	CCH	05/15	Checked By	CCH	05/15	Checked By	CCH	05/15

isaiah.quintana
6/29/2015 5:59:56 PM
DGN MODEL:Sheet
P:\13033540B - I-70 over Havana DB\19339\Bridge\Drawings\19339BRDG_B130-Girder.dgn

Print Date: 6/29/2015
File Name: 19339BRDG_B130-Girder.dgn
Horiz. Scale: None Vert. Scale: None
Staff Bridge Branch - Unit 0224 AJP

TSIOUVARAS SIMMONS HOLDERNESS

Sheet Revisions		
Date:	Comments	Init.

Colorado Department of Transportation
4670 N. Holly
Denver, CO 80216
Phone: 303-398-6767 FAX: 303-398-6781
Region 1 KK

As Constructed
No Revisions:
Revised:
Void:

I-70 OVER HAVANA STREET DESIGN-BUILD
I-70 BRIDGE OVER HAVANA
PRECAST CONCRETE BOX GIRDER

Designer: J. Garrison
Detailer: M. Welch
Sheet Subset: Bridge 1
Structure Numbers: E-17-VD
Subset Sheets: B30 of 45

Project No./Code
FBR 0704-230
19339
Sheet Number 68

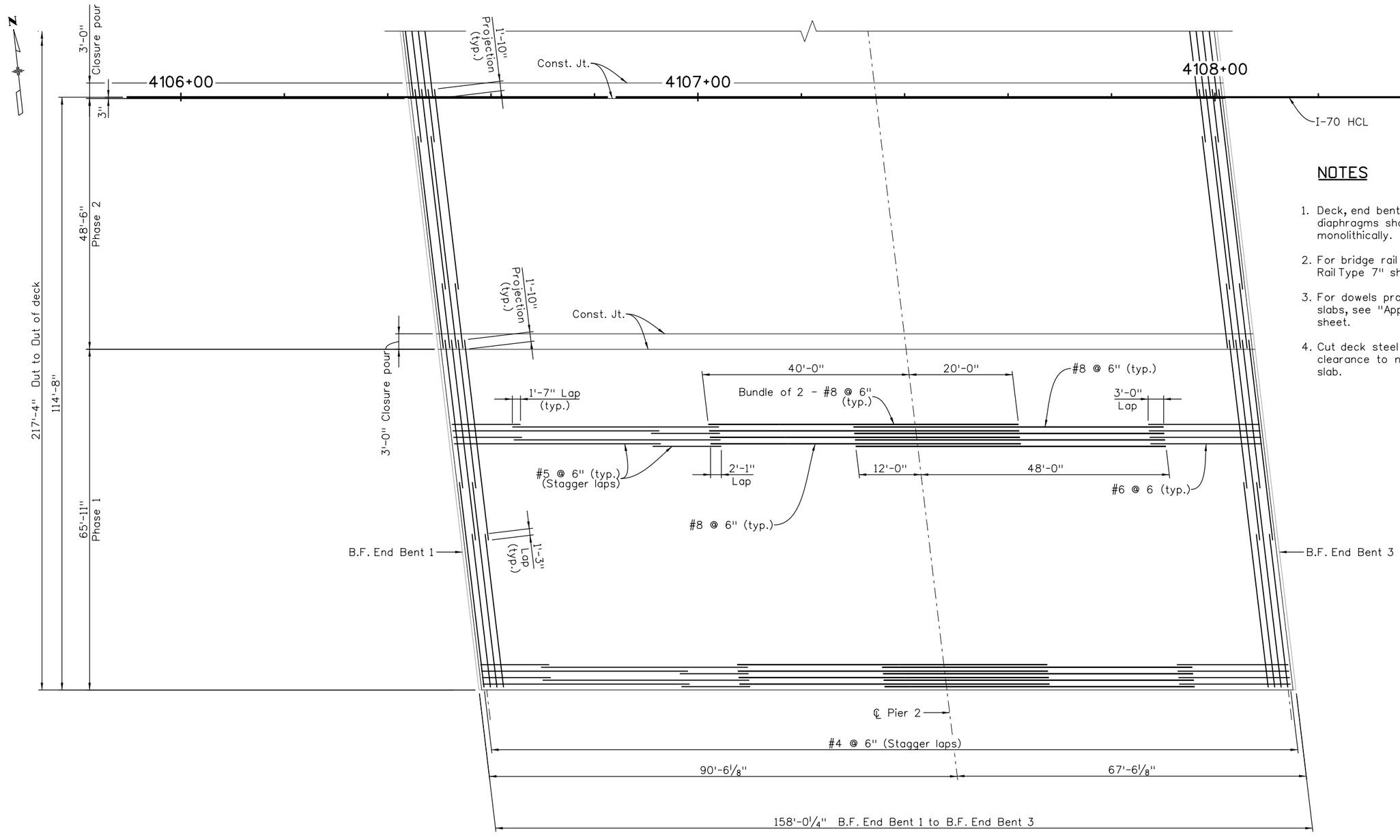

NOTES

1. Deck, end bent diaphragms and pier diaphragms shall be placed monolithically.
2. For bridge rail reinforcing, see "Bridge Rail Type 7" sheets.
3. For dowels projecting into approach slabs, see "Approach Slab Details" sheet.
4. Cut deck steel to provide 2 inches of clearance to notch for approach slab.

DECK REINFORCING PLAN

Design	INITIAL	DATE
Designed By	MAG	05/15
Checked By	CCH	05/15

Detail	INITIAL	DATE
Detailed By	MJW	05/15
Checked By	CCH	05/15

Quantities	INITIAL	DATE
Quantities By	JWG	05/15
Checked By	CCH	05/15

P:\13033540B - I-70 over Havana DB\19339\Bridge\Drawings\19339BRDG_B131-32-DeckPlan.dgn
isaiah.quintana
6/29/2015 5:59:57 PM
DGN MODEL:sheet 1

Print Date: 6/29/2015
File Name: 19339BRDG_B131-32-DeckPlan.dgn
Horiz. Scale: None Vert. Scale: None
Staff Bridge Branch - Unit 0224 AJP

TSIOUVARAS SIMMONS HOLDERNESS

Sheet Revisions		
Date:	Comments	Init.

Colorado Department of Transportation
4670 N. Holly
Denver, CO 80216
Phone: 303-398-6767 FAX: 303-398-6781
Region 1 KK

As Constructed
No Revisions:
Revised:
Void:

I-70 OVER HAVANA STREET DESIGN-BUILD
I-70 BRIDGE OVER HAVANA
DECK REINFORCING PLAN (1 OF 2)

Designer: J. Garrison
Detailer: M. Welch
Sheet Subset: Bridge 1
Structure Numbers: E-17-VD
Subset Sheets: B31 of 45

Project No./Code
FBR 0704-230
19339
Sheet Number 69

RFC02 JUNE, 2015 (REVIEW)

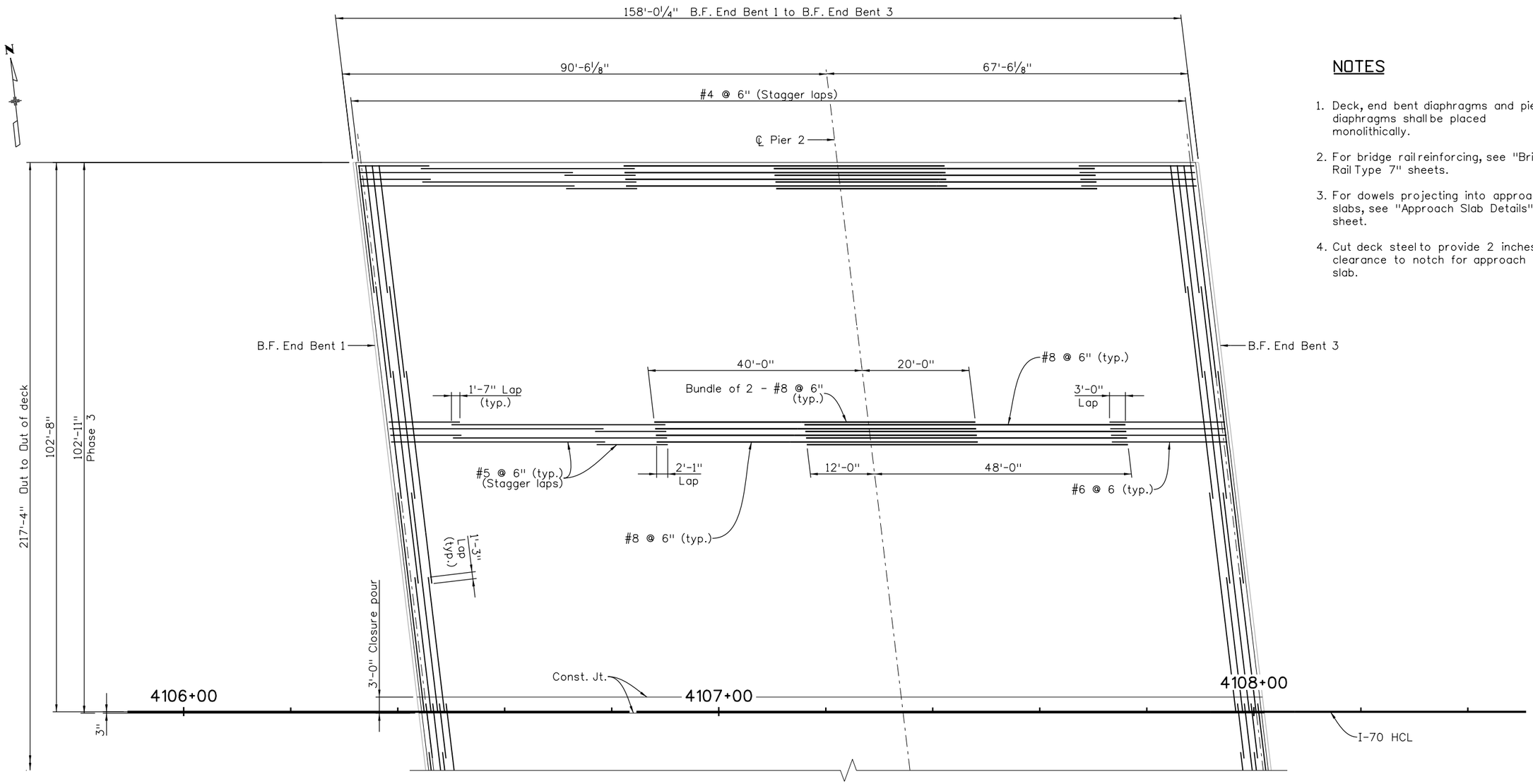

DECK REINFORCING PLAN

NOTES

1. Deck, end bent diaphragms and pier diaphragms shall be placed monolithically.
2. For bridge rail reinforcing, see "Bridge Rail Type 7" sheets.
3. For dowels projecting into approach slabs, see "Approach Slab Details" sheet.
4. Cut deck steel to provide 2 inches of clearance to notch for approach slab.

Design	INITIAL	DATE	Detail	INITIAL	DATE	Quantities	INITIAL	DATE
Designed By	MAG	05/15	Detailed By	MJW	05/15	Quantities By	JWG	05/15
Checked By	CCH	05/15	Checked By	CCH	05/15	Checked By	CCH	05/15

P:\130354DB - I-70 over Havana DB\19339\Bridge\Drawings\19339BRDG_B131-32-DeckPlan.dgn
isaiah.quintana
6/29/2015 5:59:59 PM
DGN MODEL:sheet 2

RFC02 JUNE, 2015 (REVIEW)

Print Date: 6/29/2015
File Name: 19339BRDG_B131-32-DeckPlan.dgn
Horiz. Scale: None Vert. Scale: None
Staff Bridge Branch - Unit 0224 AJP

TSIOUVARAS SIMMONS HOLDERNESS

Sheet Revisions		
Date:	Comments	Init.

Colorado Department of Transportation
4670 N. Holly
Denver, CO 80216
Phone: 303-398-6767 FAX: 303-398-6781
Region 1 KK

As Constructed
No Revisions:
Revised:
Void:

I-70 OVER HAVANA STREET DESIGN-BUILD
I-70 BRIDGE OVER HAVANA
DECK REINFORCING PLAN (2 OF 2)

Designer: J. Garrison
Detailer: M. Welch
Sheet Subset: Bridge 1
Structure Numbers: E-17-VD
Subset Sheets: B32 of 45

Project No./Code
FBR 0704-230
19339
Sheet Number 70

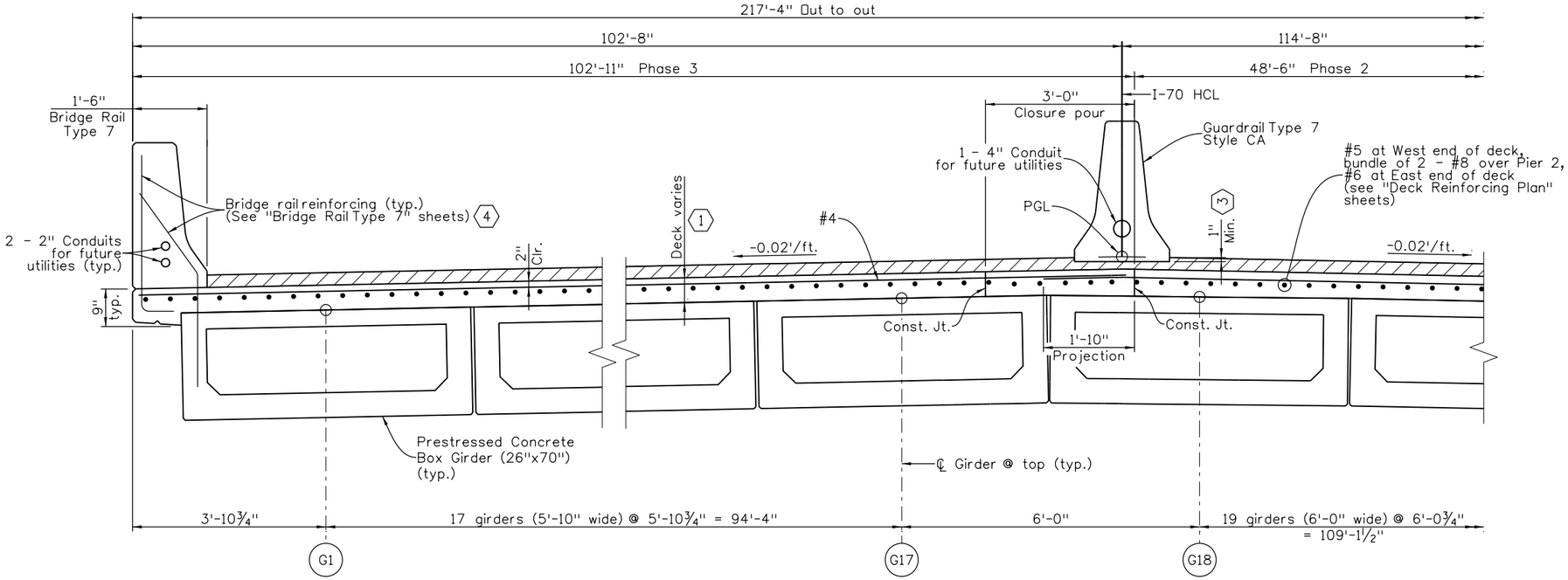

NOTES

1. Deck shall be concrete class D (Bridge).
2. Deck concrete shall not be placed until the girders have reached a minimum age of 30 days.
3. See "Deck Reinforcing Plan" sheets for additional information.

KEY NOTES

1. 5" Min., 7" @ ℄ Brg.
2. Seal gaps prior to placement of deck concrete.
3. See CDOT standard plan M-606-13 for additional information.
4. See "Bridge Rail Type 7" sheets for bridge rail reinforcing at end bents and pier.

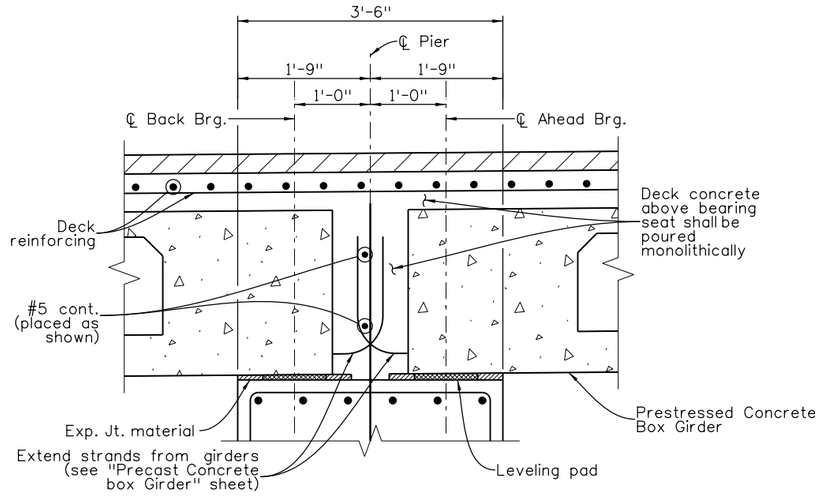

PIER DIAPHRAGM SECTION

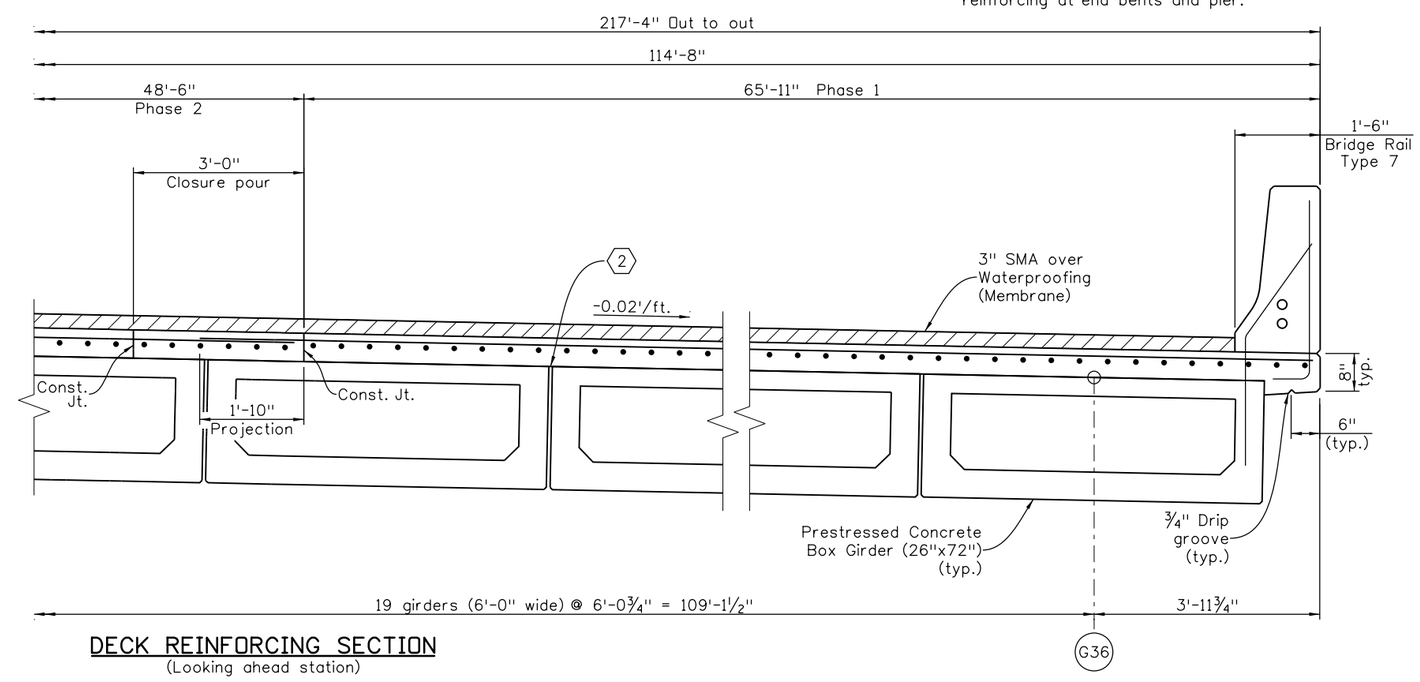

DEACK REINFORCING SECTION

(Looking ahead station)

Design			Detail			Quantities		
	INITIAL	DATE		INITIAL	DATE		INITIAL	DATE
Designed By	MAG	05/15	Detailed By	MJW	05/15	Quantities By	JWG	05/15
Checked By	CCH	05/15	Checked By	CCH	05/15	Checked By	CCH	05/15

P:\130354DB - I-70 over Havana DB\19339\Bridge\Drawings\19339BRDG_B133-DeckSection.dgn
DGN MODEL:sheet
6/29/2015 6:00:00 PM
isaiah.quintana

Print Date: 6/29/2015
File Name: 19339BRDG_B133-DeckSection.dgn
Horiz. Scale: None Vert. Scale: None
Staff Bridge Branch - Unit 0224 AJP

TSIOUVARAS SIMMONS HOLDERNESS

Sheet Revisions		
Date:	Comments	Init.

Colorado Department of Transportation
4670 N. Holly
Denver, CO 80216
Phone: 303-398-6767 FAX: 303-398-6781
Region 1 KK

As Constructed
No Revisions:
Revised:
Void:

I-70 OVER HAVANA STREET DESIGN-BUILD
I-70 BRIDGE OVER HAVANA
DECK REINFORCING SECTION

Designer: J. Garrison
Detailer: M. Welch
Sheet Subset: Bridge 1
Structure Numbers: E-17-VD
Subset Sheets: B33 of 45

Project No./Code
FBR 0704-230
19339
Sheet Number 71

RFC02 JUNE, 2015 (REVIEW)

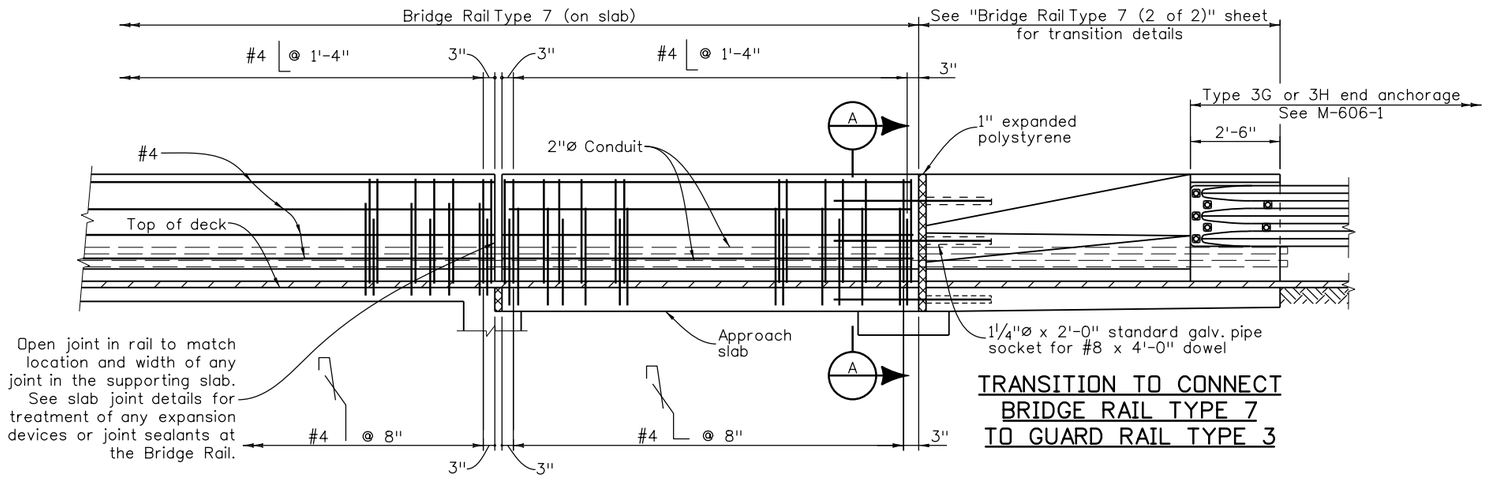

ELEVATION

TRANSITION TO CONNECT BRIDGE RAIL TYPE 7 TO GUARD RAIL TYPE 3

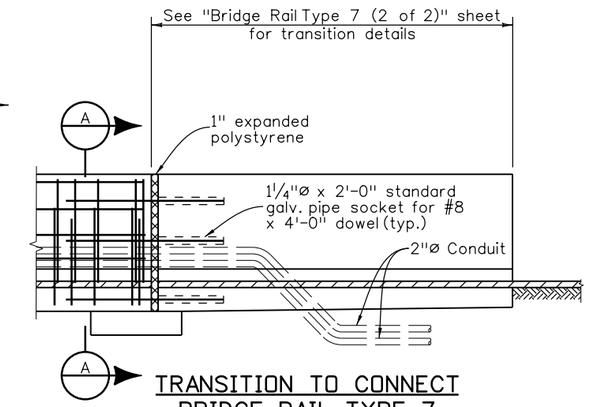

TRANSITION TO CONNECT BRIDGE RAIL TYPE 7 TO ROADWAY SHOULDER TYPE 7

NOTES:

1. Backfill wingwalls and retaining walls before barrier is placed.
2. All bridge rail concrete shall be Class D.
3. Bridge rail shall be constructed plumb.
4. See Std. M-606-1 and M-606-13 for Guard Rail Type 3 details and details of transition.
5. Concrete and reinforcing steel shall conform to the requirements of Sections 601 and 602.
6. The surface of the rail shall be tested with a 10 foot straight edge laid along the surface in the longitudinal direction. Deviation of the concrete surface from the straight edge shall be less than ¼" plus allowance for roadway horizontal and vertical curvature, if any.
7. At the two locations where Bridge Rail Type 7 transitions to Guardrail Type 3, project conduit 3" from end of Type 3 End Transition and cap end of conduit.

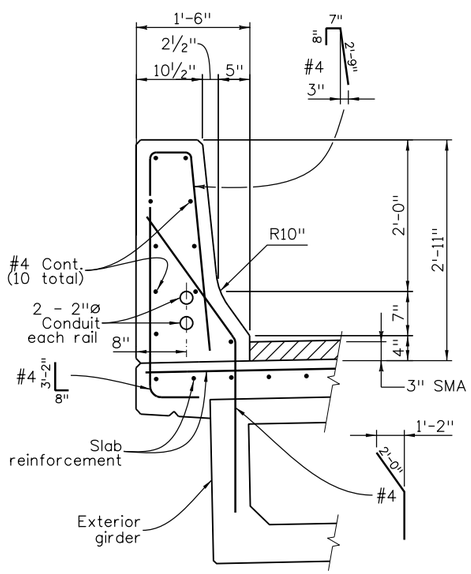

TYPICAL SECTION

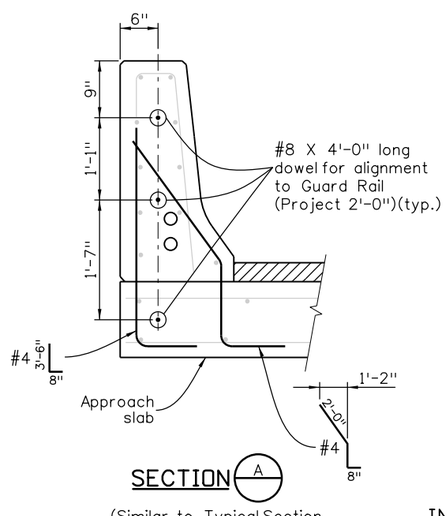

SECTION A

(Similar to Typical Section except as shown)
(Approach slab shown, similar at end bents and pier)

DESIGN DATA

Reinforced concrete:

Class D Concrete: f'_c = 4,500 psi
Reinforcing steel: f_y = 60,000 psi

INFORMATION ONLY

Description	Unit	Per Lin. Ft.
Concrete Class D	Cu. Yd.	0.12
Reinforcing Steel (Epoxy Coated)	Lb.	16.2

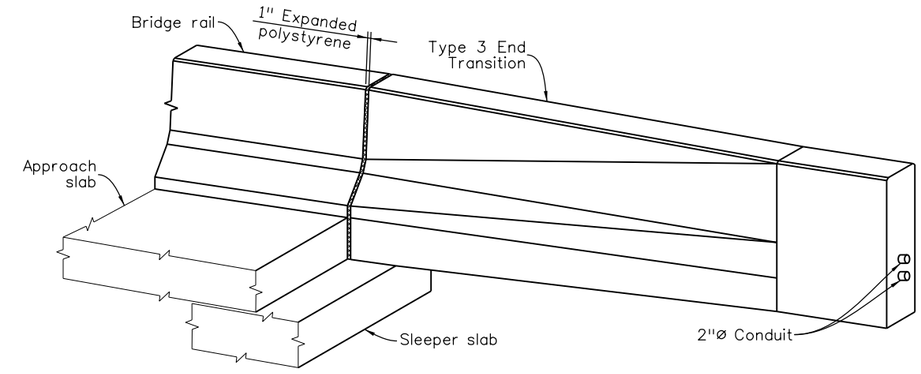

ISOMETRIC VIEW - TYPE 3 END TRANSITION

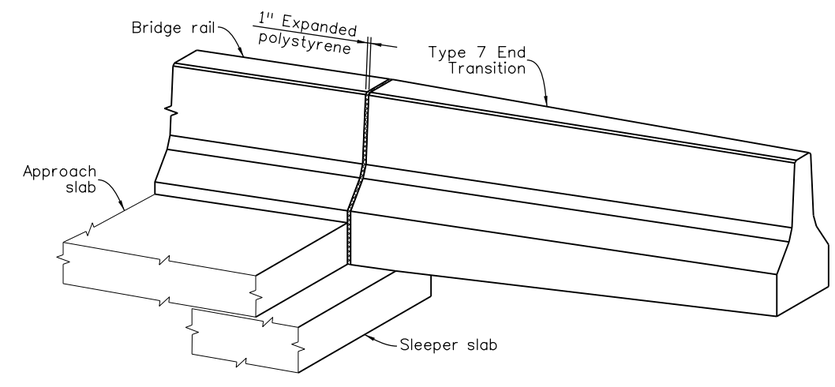

ISOMETRIC VIEW - TYPE 7 END TRANSITION

Quantities		
	INITIAL	DATE
Quantities By	JWG	05/15
Checked By	CCH	05/15

Detail		
	INITIAL	DATE
Detailed By	MJW	05/15
Checked By	CCH	05/15

Design		
	INITIAL	DATE
Designed By	CCH	05/15
Checked By	MAG	05/15

P:\130335\DB - I-70 over Havana DB\19339\Bridge\Drawings\19339BRDG_B134-BridgeRailT701.dgn
isaiah.quintana
6/29/2015 6:00:02 PM
DGN MODEL:sheet

Print Date: 6/29/2015
File Name: 19339BRDG_B134-BridgeRailT701.dgn
Horiz. Scale: None Vert. Scale: None
Staff Bridge Branch - Unit 0224 AJP

Sheet Revisions		
Date:	Comments	Init.

Colorado Department of Transportation
4670 N. Holly
Denver, CO 80216
Phone: 303-398-6767 FAX: 303-398-6781
Region 1 KK

As Constructed
No Revisions:
Revised:
Void:

I-70 OVER HAVANA STREET DESIGN-BUILD
I-70 BRIDGE OVER HAVANA
BRIDGE RAIL TYPE 7 (1 OF 2)

Designer: C. Hammond
Detailer: M. Welch
Sheet Subset: Bridge 1
Structure Numbers: E-17-VD
Subset Sheets: B34 of 45

Project No./Code
FBR 0704-230
19339
Sheet Number 72

RFC02 JUNE, 2015 (REVIEW)

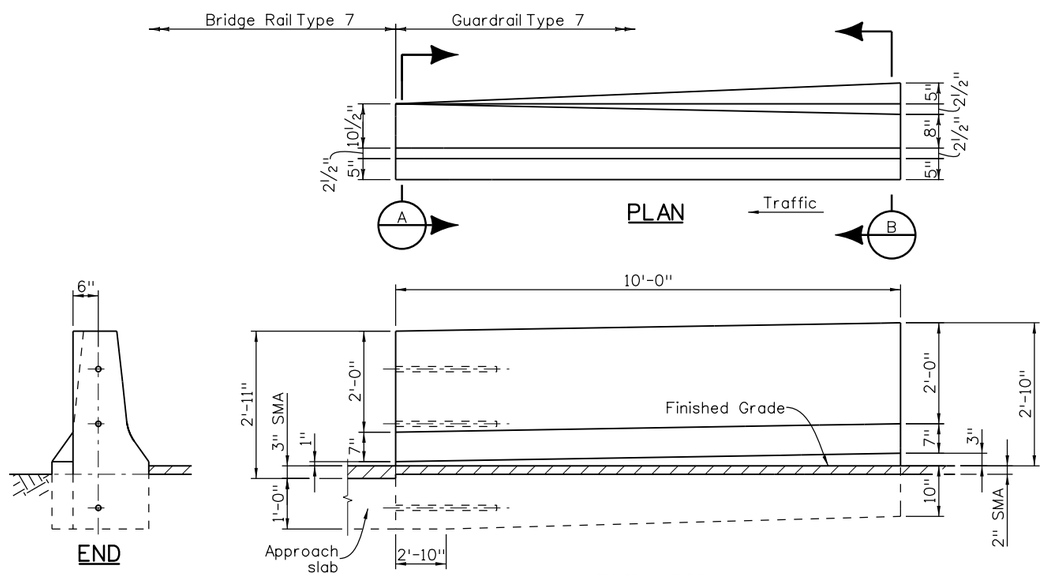

BRIDGE RAIL TYPE 7 TO ROADWAY SHOULDER TYPE 7 END TRANSITION

See M-606-13 sheet 2, transition detail, for reinforcement information.

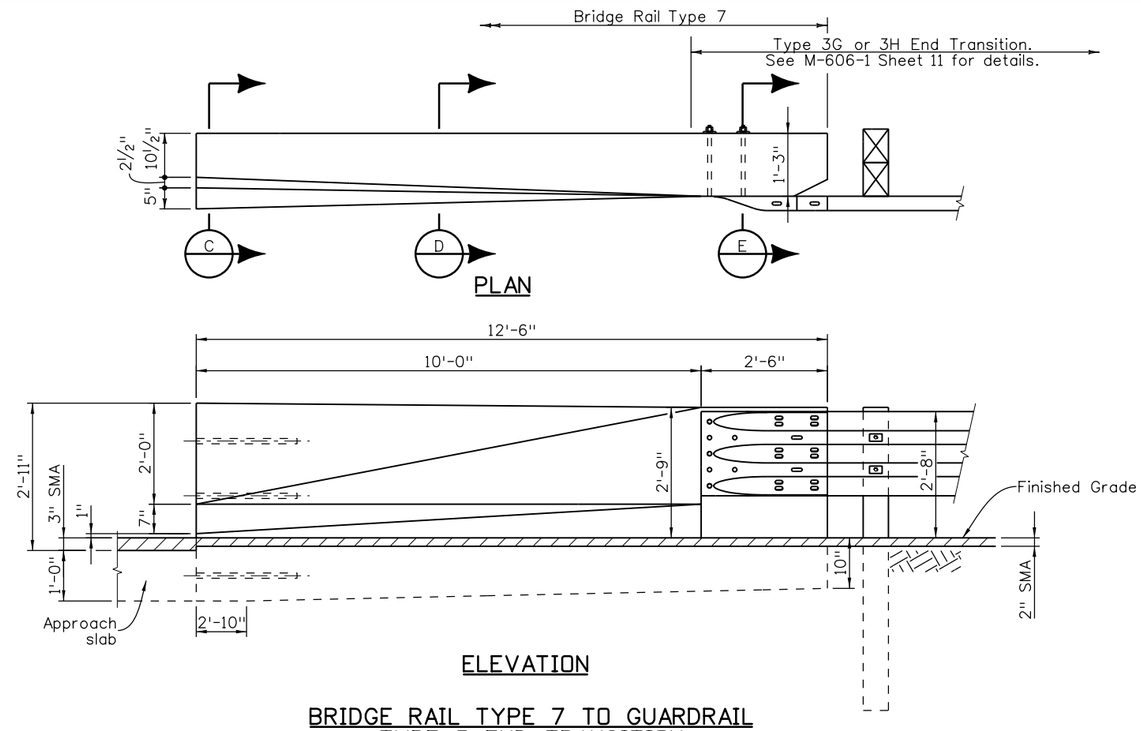

BRIDGE RAIL TYPE 7 TO GUARDRAIL TYPE 3 END TRANSITION

Reinforcement per M-606-13 sheet 2, transition detail type 7 to single type 3G. (Conduit omitted for clarity)

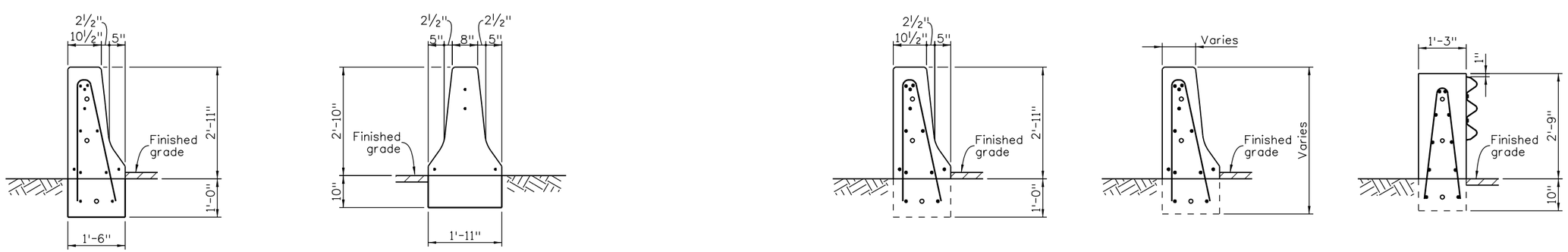

Design	INITIAL	DATE	Detail	INITIAL	DATE	Quantities	INITIAL	DATE
Designed By	CCH	05/15	Detailed By	MJW	05/15	Quantities By	JWG	05/15
Checked By	MAG	05/15	Checked By	CCH	05/15	Checked By	CCH	05/15

P:\130335\DB - I-70 over Havana DB\19339\Bridge\Drawings\19339BRDG_B135-BridgeRailT702.dgn
isaiah.quintana
6/29/2015 6:00:03 PM
DGN MODEL:sheet

Print Date: 6/29/2015
File Name: 19339BRDG_B135-BridgeRailT702.dgn
Horiz. Scale: None Vert. Scale: None
Staff Bridge Branch - Unit 0224 AJP

Sheet Revisions		
Date:	Comments	Init.

Colorado Department of Transportation
4670 N. Holly
Denver, CO 80216
Phone: 303-398-6767 FAX: 303-398-6781
Region 1 KK

As Constructed
No Revisions:
Revised:
Void:

I-70 OVER HAVANA STREET DESIGN-BUILD
I-70 BRIDGE OVER HAVANA
BRIDGE RAIL TYPE 7 (2 OF 2)

Designer:	C. Hammond	Structure Numbers	E-17-VD
Detailer:	M. Welch		
Sheet Subset:	Bridge 1	Subset Sheets:	B35 of 45

Project No./Code
FBR 0704-230
19339
Sheet Number 73

RFC02 JUNE, 2015 (REVIEW)

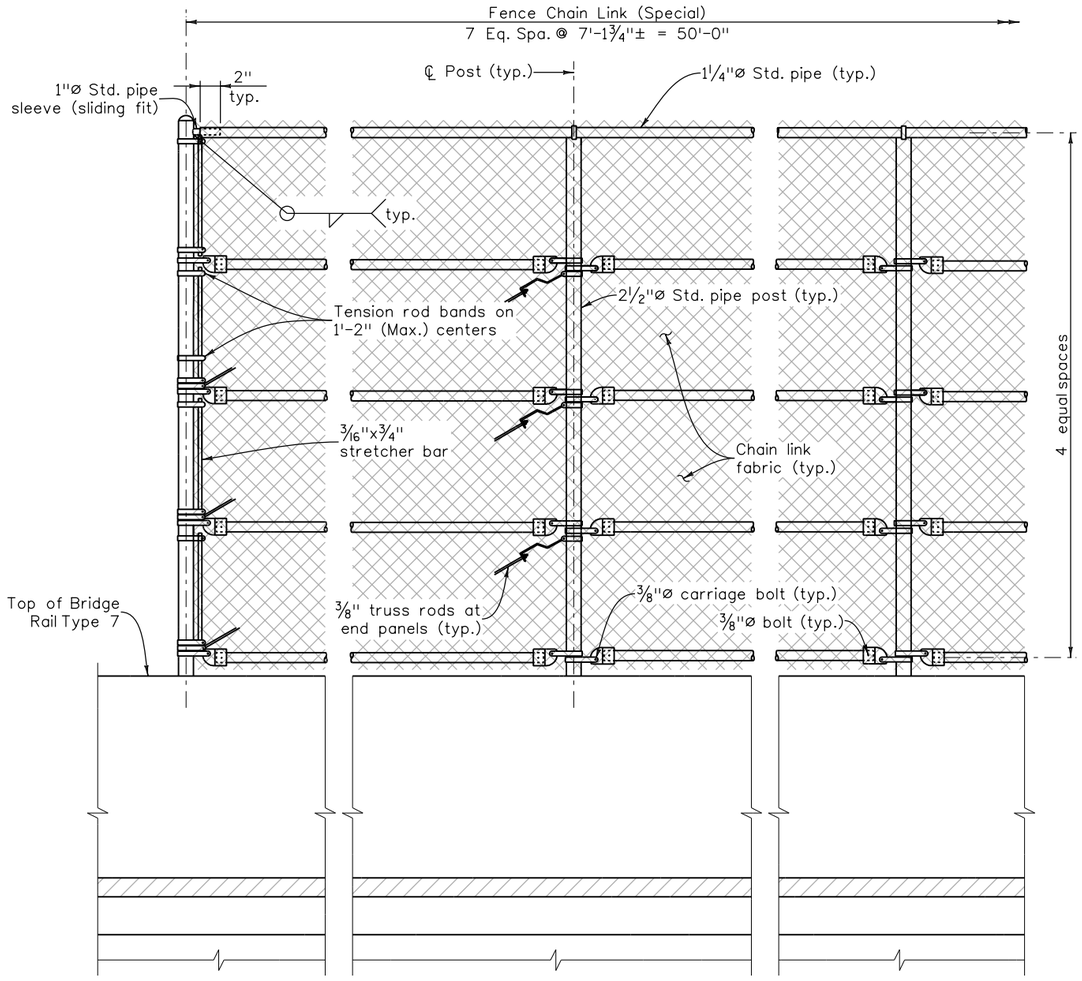

END POST

TYPICAL POSTS

PARTIAL ELEVATION

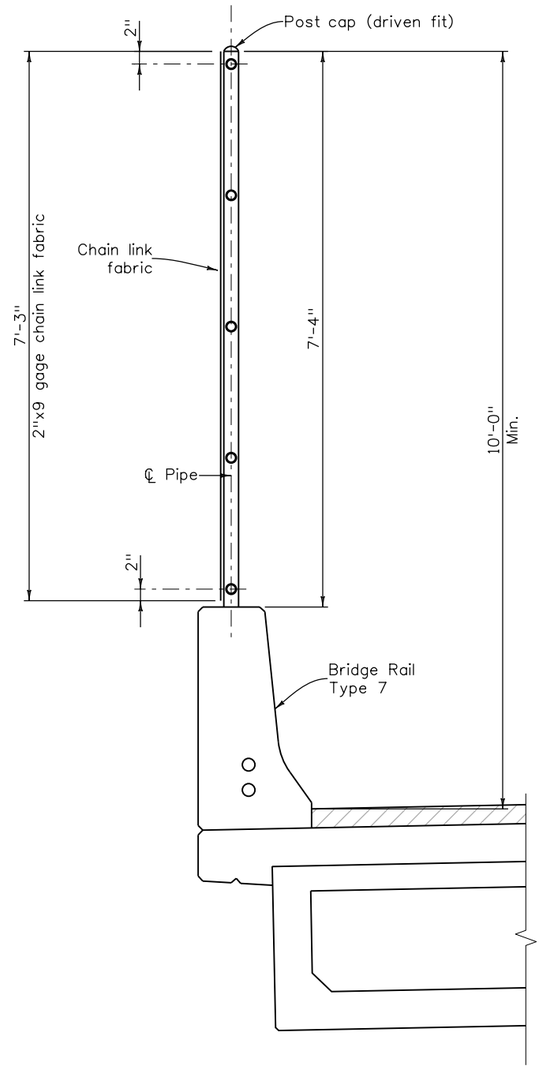

TYPICAL SECTION

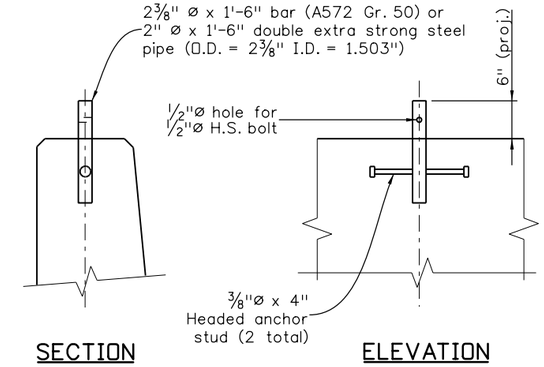

SECTION

ELEVATION

ANCHORAGE DETAIL

NOTES

1. Fence assembly shall be galvanized after fabrication.
2. Knuckle selvage at bottom, barbed selvage at top.
3. Pipe shall conform to ASTM A53 Type E or S, Grade B fy = 35,000 psi.
4. Truss rods shall have turnbuckles.
5. Posts shall be plumb.
6. Chain link fabric shall be attached to all horizontal pipes with 9 gage wire ties at 1'-0" spacing.
7. For additional information, see "Bride Rail Type 7" sheets.

Design			Detail			Quantities		
	INITIAL	DATE		INITIAL	DATE		INITIAL	DATE
Designed By	CCH	05/15	Detailed By	MJW	05/15	Quantities By	JWG	05/15
Checked By	MAG	05/15	Checked By	CCH	05/15	Checked By	CCH	05/15

P:\130335408 - I-70 over Havana DB\19339\Bridge\Drawings\19339BRDG_B136-37-Fence.dgn
isaiah.quintana
6/29/2015 6:00:05 PM
DGN MODEL:sheet1

Print Date: 6/29/2015
File Name: 19339BRDG_B136-37-Fence.dgn
Horiz. Scale: None Vert. Scale: None
Staff Bridge Branch - Unit 0224 AJP

TSIOUVARAS SIMMONS HOLDERNESS

Sheet Revisions		
Date:	Comments	Init.

Colorado Department of Transportation
4670 N. Holly
Denver, CO 80216
Phone: 303-398-6767 FAX: 303-398-6781
Region 1 KK

As Constructed
No Revisions:
Revised:
Void:

I-70 OVER HAVANA STREET DESIGN-BUILD
I-70 BRIDGE OVER HAVANA
FENCE CHAIN LINK (SPECIAL) (1 OF 2)

Designer: C. Hammond
Detailer: M. Welch
Sheet Subset: Bridge 1
Structure Numbers: E-17-VD
Subset Sheets: B36 of 45

Project No./Code
FBR 0704-230
19339
Sheet Number 74

RFC02 JUNE, 2015 (REVIEW)

Design			Detail			Quantities		
	INITIAL	DATE		INITIAL	DATE		INITIAL	DATE
Designed By	CCH	05/15	Detailed By	MJW	05/15	Quantities By	JWG	05/15
Checked By	MAG	05/15	Checked By	CCH	05/15	Checked By	CCH	05/15

P:\130354DB - I-70 over Havana DB\19339\Bridge\Drawings\19339BRDG_B136-37-Fence.dgn

isaiah.quintana
6/29/2015 6:00:06 PM
DGN MODEL:sheet2

Print Date: 6/29/2015
File Name: 19339BRDG_B136-37-Fence.dgn
Horiz. Scale: None Vert. Scale: None
Staff Bridge Branch - Unit 0224 AJP

TSIOUVARAS SIMMONS HOLDERNESS

Sheet Revisions		
Date:	Comments	Init.

Colorado Department of Transportation
4670 N. Holly
Denver, CO 80216
Phone: 303-398-6767 FAX: 303-398-6781
Region 1 KK

As Constructed
No Revisions:
Revised:
Void:

I-70 OVER HAVANA STREET DESIGN-BUILD
I-70 BRIDGE OVER HAVANA
FENCE CHAIN LINK (SPECIAL) (2 OF 2)

Designer: C. Hammond
Detailer: M. Welch
Sheet Subset: Bridge 1
Structure Numbers: E-17-VD
Subset Sheets: B37 of 45

Project No./Code
FBR 0704-230
19339
Sheet Number 75

RFC02 JUNE, 2015 (REVIEW)

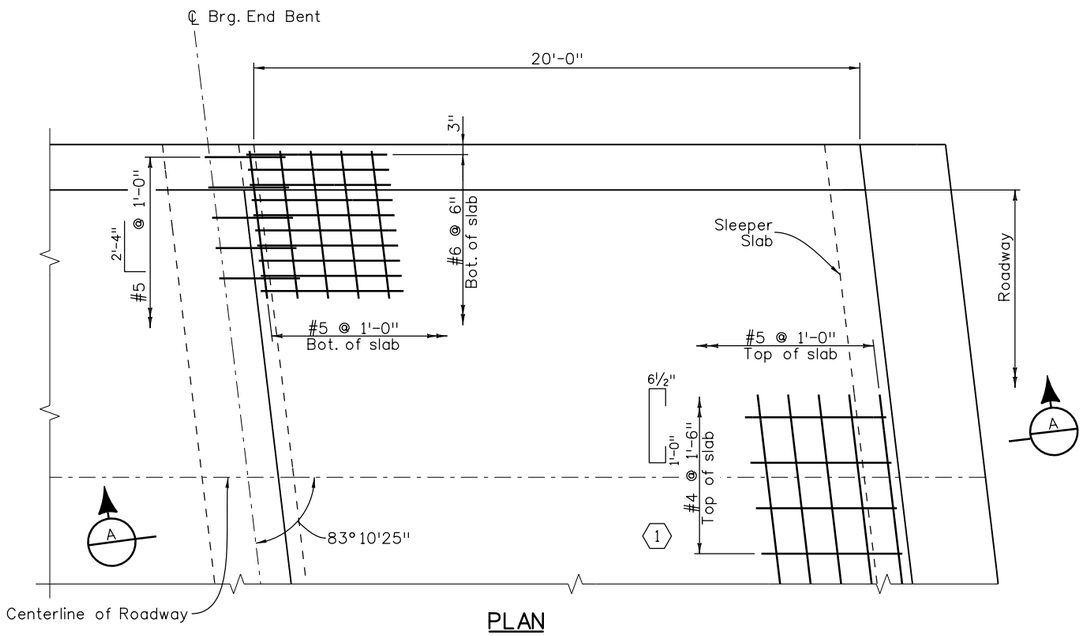

PLAN

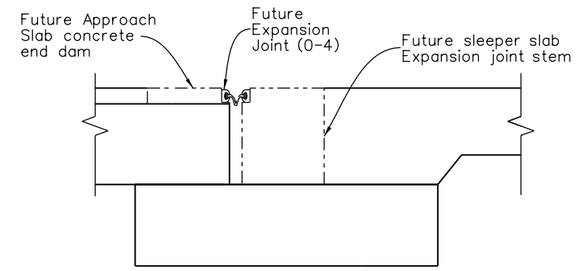

FUTURE JOINT DETAIL

(If necessary for future concrete pavement.)

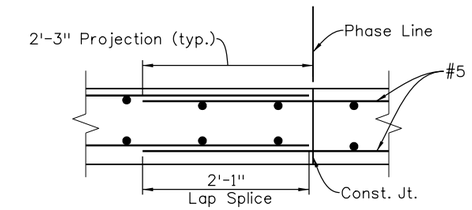

PHASING DETAIL

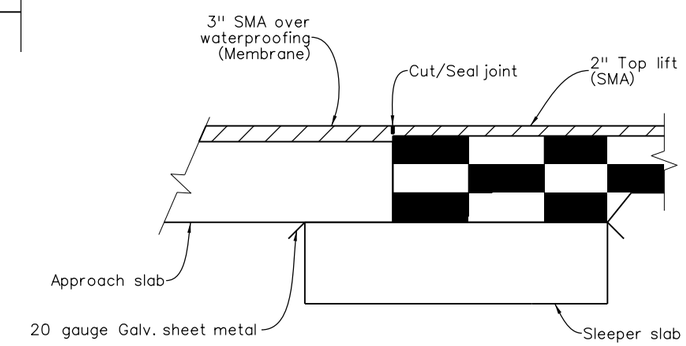

JOINT DETAIL

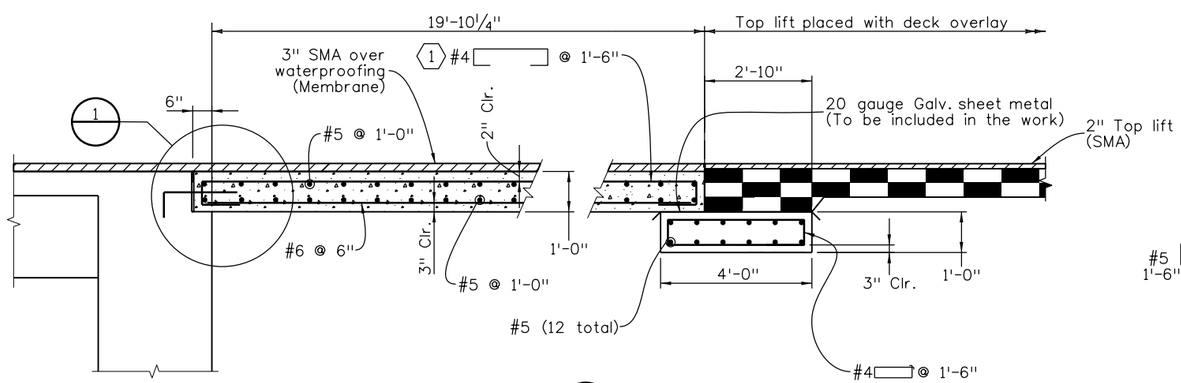

SECTION A

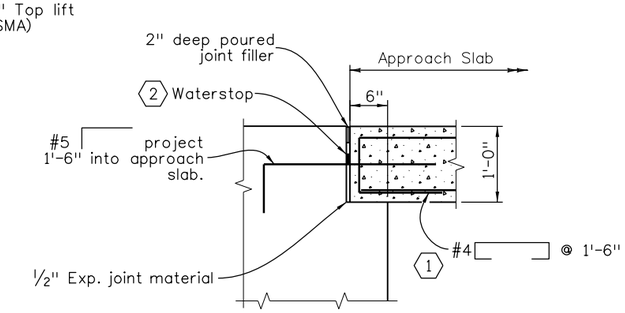

DETAIL 1

KEY NOTES:

1. Contractor may use [7" (1'-0")
2. Installation of waterstop shall comply with manufacturer's recommendations. Waterstop shall be projected 6" vertically into bridge rail at each edge of approach slab.

NOTES:

1. Concrete Class D (Bridge) shall be used for approach slabs.
2. Approach slab concrete shall be cured in accordance with the Specifications for Bridge Deck Concrete in Subsection 601.
3. ½" expansion joint material shall meet AASHTO Spec. M213.
4. When not at phase lines, lap splices of approach slab reinforcing shall be staggered and meet or exceed the following minimum lengths:
   #5 = 1'-7"

Design			Detail			Quantities		
	INITIAL	DATE		INITIAL	DATE		INITIAL	DATE
Designed By	CCH	05/15	Detailed By	MJW	05/15	Quantities By	JWG	05/15
Checked By	MAG	05/15	Checked By	CCH	05/15	Checked By	CCH	05/15

isaiah.quintana
6/29/2015 6:00:07 PM
DGN MODEL:sheet
P:\130335\4DB - I-70 over Havana DB\19339\Bridge\Drawings\19339BRDG_B138-ApprSlab.dgn

Print Date: 6/29/2015
File Name: 19339BRDG_B138-ApprSlab.dgn
Horiz. Scale: None Vert. Scale: None
Staff Bridge Branch - Unit 0224 AJP

Sheet Revisions		
Date:	Comments	Init.

Colorado Department of Transportation
4670 N. Holly
Denver, CO 80216
Phone: 303-398-6767 FAX: 303-398-6781
Region 1 KK

As Constructed
No Revisions:
Revised:
Void:

I-70 OVER HAVANA STREET DESIGN-BUILD
I-70 BRIDGE OVER HAVANA
APPROACH SLAB DETAILS

Designer: C. Hammond
Detailer: M. Welch
Sheet Subset: Bridge 1
Structure Numbers: E-17-VD
Subset Sheets: B38 of 45

Project No./Code
FBR 0704-230
19339
Sheet Number 76

RFC02 JUNE, 2015 (REVIEW)

State of Colorado
Department of Transportation
Staff Bridge Design
Bridge Geometry Project Coordinate Converter
Version 1.00
Run date & time = Thu Apr 30 09:37:29 2015
Input Northing Offset = 454516.428500
Input Easting Offset = 678964.181700
Input Bearing = S 83 42 57.7300 E

STRUCTURE ID: E-17-VD BRIDGE GEOMETRY (WIN2.1.0e) 15/04/30 09:25

DESCRIPTION

Units:feet;
Project:FBR 0704-230;Subaccount:19339;
Designer:J. Garrison;Detailer:M. Welch;
Location:Denver;
2 SPAN (89'-0", 66'-0") BRIDGE
CONCRETE PRESTRESSED BOX GIRDER CONTINUOUS (PRECAST)
OVER HAVANA STREET AND UPRR ARSENAL INDUSTRIAL LEAD TRACK
214'-4" ROADWAY WIDTH CURB TO CURB
83°10'25" SKEW
1'-6" BRIDGE RAIL TYPE 7 WITH FENCE CHAIN LINK (SPECIAL)(EACH EDGE)
AND TYPE 7 MEDIAN BARRIER

HORIZONTAL ALIGNMENT DATA

HORIZONTAL TANGENT

VERTICAL ALIGNMENT DATA

ELEVATION AT PI	ELEVATION AT GRADE	STATION		ELEVATION AT GRADE	ELEVATION AT PI	PERCENT GRADE
						3.560000
		4100+55.0000	PC	5294.5720		
		4107+85.0000	PI	5309.8473	5320.5600	
		4115+15.0000	PT	5303.6970		
						-2.310000

TABLE OF ROADWAY CROSS-SLOPES (SUPERELEVATION: E= -NC-)

STATION	SLOPE LEFT	SLOPE RIGHT	VC LENGTH
(ON TANGENT)	-0.0200	-0.0200	75.00 (MAX)

OFFSET PROFILE CONTROL TO PIVOT POINT = 0.0000 FEET

LIMITS OF VALID ELEVATION AND CROSS-SLOPE DATA	BEGIN	END
	4100+50.0000	4115+20.0000

LAYOUT LINE DATA

LAYOUT LINE DEFINED TO BE COINCIDENT WITH HORIZONTAL CONTROL

	HCL STA	OFFSET	X	Y
LAYOUT LINE INTERSECTS REF LINE AT	4105+00.0000	0.00000000	0.0000	0.0000

DEAD LOAD DEFLECTION DATA

DEFLECTIONS AT TENTH POINTS FROM FITTED CURVE

	0.0	0.1	0.2	0.3	0.4	0.5	0.6	0.7	0.8	0.9	1.0		
FOR BENT LINE: CL BRG EB1					07 CARD(S): 1		GIRDER LINES REFERENCED BY: (BLANK)						
													A4=0.878057
INCH	0.0000	1.4180	2.5220	3.3100	3.7823	3.9396	3.7823	3.3100	2.5220	1.4180	0.0000	INCH	A3=-1.75611
FOOT	0.0000	0.1182	0.2102	0.2758	0.3152	0.3283	0.3152	0.2758	0.2102	0.1182	0.0000	FOOT	A2= 1.19315
													A1=-.315090
SLOPE 1.311198											-1.311198	SLOPE	A0=-15.7344
FOR BENT LINE: AH BRG P2					07 CARD(S): 1		GIRDER LINES REFERENCED BY: (BLANK)						
													A4=0.439029
INCH	0.0000	0.4210	0.7490	0.9830	1.1231	1.1698	1.1231	0.9830	0.7490	0.4210	0.0000	INCH	A3=-.878057
FOOT	0.0000	0.0351	0.0624	0.0819	0.0936	0.0975	0.0936	0.0819	0.0624	0.0351	0.0000	FOOT	A2=0.596574
													A1=-.157545
SLOPE 0.388932											-0.388932	SLOPE	A0=-4.66719

BENT LINE : DESCRIPTION :	INTERSECTION POINT STATION	OFFSET	ELEVATION	FROM LAYOUT LINE OFFSET X	ORDINATE Y	PROJECT COORDINATES NORTHING	EASTING	BENT LINE LENGTH FROM Y-AXIS	SKEW D M S	GIRDER LINE LENGTH FROM REF LINE	ROADWAY CROSS-SLOPE
* HORIZONTAL CONTROL LINE *			AT FINISHED GRADE								
*REF LINE	4105+00.0000	0.0000	5306.4332	0.0000	0.0000	454516.4285	678964.1817	0.0000	-6 49 34.63	0.0000	
BF EB1	4106+43.9300	0.0000	5308.5655	0.0000	143.9300	454500.6745	679107.2469	0.0000	-6 49 34.63	143.9300	
CL BRG EB1	4106+45.4400	0.0000	5308.5835	10 0.0000	145.4400	454500.5092	679108.7478	0.0000	-6 49 34.63	145.4400	
BK BRG P2	4107+33.4300	0.0000	5309.4715	1 0.0000	233.4300	454490.8782	679196.2092	0.0000	-6 49 34.63	233.4300	
CL P2	4107+34.4400	0.0000	5309.4799	0.0000	234.4400	454490.7676	679197.2131	0.0000	-6 49 34.63	234.4400	
AH BRG P2	4107+35.4400	0.0000	5309.4881	10 0.0000	235.4400	454490.6582	679198.2071	0.0000	-6 49 34.63	235.4400	
CL BRG EB3	4108+00.4400	0.0000	5309.9390	1 0.0000	300.4400	454483.5435	679262.8165	0.0000	-6 49 34.63	300.4400	
BF EB3	4108+01.9500	0.0000	5309.9474	0.0 0.0000	301.9500	454483.3782	679264.3175	0.0000	-6 49 34.63	301.9500	

LEFT EDGE — PARALLEL TO HORIZONTAL CONTROL — 0.250000 FEET BELOW FINISHED GRADE

BENT LINE	STATION	OFFSET	ELEVATION	ELEV+DL	X	Y	NORTHING	EASTING	BENT LNTH	SKEW	GIRDER LNTH	CRS-SLP
*REF LINE	4104+87.7100	-102.6667	5303.9091		-102.6667	-12.2900	454619.8236	678963.2030	-103.3997	-6 49 34.63	0.0000	-0.020000
BF EB1	4106+31.6400	-102.6667	5306.1126		-102.6667	131.6400	454604.0695	679106.2683	-103.3997	-6 49 34.63	143.9300	-0.020000
CL BRG EB1	4106+33.1500	-102.6667	5306.1313	306.1313	-102.6667	133.1500	454603.9043	679107.7692	-103.3997	-6 49 34.63	145.4400	-0.020000
F-1	4106+41.9490	-102.6667	5306.2385	306.3566	-102.6667	141.9490	454602.9412	679116.5153			154.2390	-0.020000
F-2	4106+50.7480	-102.6667	5306.3425	306.5527	-102.6667	150.7480	454601.9781	679125.2614			163.0380	-0.020000
F-3	4106+59.5470	-102.6667	5306.4434	306.7193	-102.6667	159.5470	454601.0149	679134.0076			171.8370	-0.020000
F-4	4106+68.3460	-102.6667	5306.5413	306.8565	-102.6667	168.3460	454600.0518	679142.7537			180.6360	-0.020000
F-5	4106+77.1450	-102.6667	5306.6360	306.9643	-102.6667	177.1450	454599.0887	679151.4998			189.4350	-0.020000
F-6	4106+85.9440	-102.6667	5306.7276	307.0428	-102.6667	185.9440	454598.1256	679160.2460			198.2340	-0.020000
F-7	4106+94.7430	-102.6667	5306.8160	307.0919	-102.6667	194.7430	454597.1625	679168.9921			207.0330	-0.020000
F-8	4107+03.5420	-102.6667	5306.9014	307.1116	-102.6667	203.5420	454596.1994	679177.7382			215.8320	-0.020000
F-9	4107+12.3410	-102.6667	5306.9837	307.1018	-102.6667	212.3410	454595.2363	679186.4844			224.6310	-0.020000
BK BRG P2	4107+21.1400	-102.6667	5307.0628	307.0628	-102.6667	221.1400	454594.2732	679195.2305	-103.3997	-6 49 34.63	233.4300	-0.020000
CL P2	4107+22.1500	-102.6667	5307.0717		-102.6667	222.1500	454594.1627	679196.2344	-103.3997	-6 49 34.63	234.4400	-0.020000
AH BRG P2	4107+23.1500	-102.6667	5307.0805	307.0805	-102.6667	223.1500	454594.0532	679197.2284	-103.3997	-6 49 34.63	235.4400	-0.020000
F-1	4107+29.6500	-102.6667	5307.1364	307.1715	-102.6667	229.6500	454593.3417	679203.6894			241.9400	-0.020000
F-2	4107+36.1500	-102.6667	5307.1906	307.2530	-102.6667	236.1500	454592.6303	679210.1503			248.4400	-0.020000
F-3	4107+42.6500	-102.6667	5307.2432	307.3251	-102.6667	242.6500	454591.9188	679216.6113			254.9400	-0.020000
F-4	4107+49.1500	-102.6667	5307.2940	307.3876	-102.6667	249.1500	454591.2073	679223.0722			261.4400	-0.020000
F-5	4107+55.6500	-102.6667	5307.3432	307.4406	-102.6667	255.6500	454590.4959	679229.5332			267.9400	-0.020000
F-6	4107+62.1500	-102.6667	5307.3906	307.4842	-102.6667	262.1500	454589.7844	679235.9941			274.4400	-0.020000
F-7	4107+68.6500	-102.6667	5307.4364	307.5183	-102.6667	268.6500	454589.0730	679242.4550			280.9400	-0.020000
F-8	4107+75.1500	-102.6667	5307.4804	307.5428	-102.6667	275.1500	454588.3615	679248.9160			287.4400	-0.020000
F-9	4107+81.6500	-102.6667	5307.5228	307.5578	-102.6667	281.6500	454587.6500	679255.3769			293.9400	-0.020000
CL BRG EB3	4107+88.1500	-102.6667	5307.5634	307.5634	-102.6667	288.1500	454586.9386	679261.8379	-103.3997	-6 49 34.63	300.4400	-0.020000
BF EB3	4107+89.6600	-102.6667	5307.5726		-102.6667	289.6600	454586.7733	679263.3388	-103.3997	-6 49 34.63	301.9500	-0.020000

GIRDER 1 — PARALLEL TO HORIZONTAL CONTROL — 0.250000 FEET BELOW FINISHED GRADE

BENT LINE	STATION	OFFSET	ELEVATION	ELEV+DL	X	Y	NORTHING	EASTING	BENT LNTH	SKEW	GIRDER LNTH	CRS-SLP
*REF LINE	4104+88.1764	-98.7700	5303.9956		-98.7700	-11.8236	454615.8992	678963.2401	-99.4752	-6 49 34.63	0.0000	-0.020000
BF EB1	4106+32.1064	-98.7700	5306.1963		-98.7700	132.1064	454600.1452	679106.3053	-99.4752	-6 49 34.63	143.9300	-0.020000
CL BRG EB1	4106+33.6164	-98.7700	5306.2150	306.2150	-98.7700	133.6164	454599.9799	679107.8063	-99.4752	-6 49 34.63	145.4400	-0.020000
F-1	4106+42.4154	-98.7700	5306.3220	306.4402	-98.7700	142.4154	454599.0168	679116.5524			154.2390	-0.020000
F-2	4106+51.2144	-98.7700	5306.4259	306.6360	-98.7700	151.2144	454598.0537	679125.2985			163.0380	-0.020000
F-3	4106+60.0134	-98.7700	5306.5266	306.8025	-98.7700	160.0134	454597.0906	679134.0447			171.8370	-0.020000
F-4	4106+68.8124	-98.7700	5306.6243	306.9395	-98.7700	168.8124	454596.1275	679142.7908			180.6360	-0.020000
F-5	4106+77.6114	-98.7700	5306.7188	307.0471	-98.7700	177.6114	454595.1644	679151.5369			189.4350	-0.020000
F-6	4106+86.4104	-98.7700	5306.8103	307.1255	-98.7700	186.4104	454594.2013	679160.2831			198.2340	-0.020000
F-7	4106+95.2094	-98.7700	5306.8986	307.1744	-98.7700	195.2094	454593.2382	679169.0292			207.0330	-0.020000
F-8	4107+04.0084	-98.7700	5306.9838	307.1940	-98.7700	204.0084	454592.2751	679177.7753			215.8320	-0.020000
F-9	4107+12.8074	-98.7700	5307.0659	307.1840	-98.7700	212.8074	454591.3120	679186.5215			224.6310	-0.020000
BK BRG P2	4107+21.6064	-98.7700	5307.1449	307.1449	-98.7700	221.6064	454590.3489	679195.2676	-99.4752	-6 49 34.63	233.4300	-0.020000
CL P2	4107+22.6164	-98.7700	5307.1537		-98.7700	222.6164	454590.2383	679196.2715	-99.4752	-6 49 34.63	234.4400	-0.020000
AH BRG P2	4107+23.6164	-98.7700	5307.1625	307.1625	-98.7700	223.6164	454590.1289	679197.2655	-99.4752	-6 49 34.63	235.4400	-0.020000
F-1	4107+30.1164	-98.7700	5307.2183	307.2534	-98.7700	230.1164	454589.4174	679203.7265			241.9400	-0.020000
F-2	4107+36.6164	-98.7700	5307.2724	307.3348	-98.7700	236.6164	454588.7059	679210.1874			248.4400	-0.020000
F-3	4107+43.1164	-98.7700	5307.3248	307.4067	-98.7700	243.1164	454587.9945	679216.6483			254.9400	-0.020000
F-4	4107+49.6164	-98.7700	5307.3755	307.4691	-98.7700	249.6164	454587.2830	679223.1093			261.4400	-0.020000
F-5	4107+56.1164	-98.7700	5307.4246	307.5220	-98.7700	256.1164	454586.5715	679229.5702			267.9400	-0.020000
F-6	4107+62.6164	-98.7700	5307.4719	307.5655	-98.7700	262.6164	454585.8601	679236.0312			274.4400	-0.020000
F-7	4107+69.1164	-98.7700	5307.5175	307.5994	-98.7700	269.1164	454585.1486	679242.4921			280.9400	-0.020000
F-8	4107+75.6164	-98.7700	5307.5614	307.6238	-98.7700	275.6164	454584.4372	679248.9531			287.4400	-0.020000
F-9	4107+82.1164	-98.7700	5307.6037	307.6387	-98.7700	282.1164	454583.7257	679255.4140			293.9400	-0.020000
CL BRG EB3	4107+88.6164	-98.7700	5307.6442	307.6442	-98.7700	288.6164	454583.0142	679261.8750	-99.4752	-6 49 34.63	300.4400	-0.020000
BF EB3	4107+90.1264	-98.7700	5307.6534		-98.7700	290.1264	454582.8489	679263.3759	-99.4752	-6 49 34.63	301.9500	-0.020000

GIRDER 2 — PARALLEL TO HORIZONTAL CONTROL — 0.250000 FEET BELOW FINISHED GRADE

BENT LINE	STATION	OFFSET	ELEVATION	ELEV+DL	X	Y	NORTHING	EASTING	BENT LNTH	SKEW	GIRDER LNTH	CRS-SLP
*REF LINE	4104+88.8822	-92.8742	5304.1263		-92.8742	-11.1178	454609.9616	678963.2963	-93.5373	-6 49 34.63	0.0000	-0.020000
BF EB1	4106+32.8122	-92.8742	5306.3230		-92.8742	132.8122	454594.2076	679106.3616	-93.5373	-6 49 34.63	143.9300	-0.020000
CL BRG EB1	4106+34.3222	-92.8742	5306.3416	306.3416	-92.8742	134.3222	454594.0423	679107.8625	-93.5373	-6 49 34.63	145.4400	-0.020000
F-1	4106+43.1212	-92.8742	5306.4484	306.5665	-92.8742	143.1212	454593.0792	679116.6086			154.2390	-0.020000
F-2	4106+51.9202	-92.8742	5306.5520	306.7622	-92.8742	151.9202	454592.1161	679125.3548			163.0380	-0.020000
F-3	4106+60.7192	-92.8742	5306.6525	306.9283	-92.8742	160.7192	454591.1530	679134.1009			171.8370	-0.020000
F-4	4106+69.5182	-92.8742	5306.7499	307.0651	-92.8742	169.5182	454590.1899	679142.8470			180.6360	-0.020000
F-5	4106+78.3172	-92.8742	5306.8442	307.1725	-92.8742	178.3172	454589.2268	679151.5932			189.4350	-0.020000
F-6	4106+87.1162	-92.8742	5306.9354	307.2506	-92.8742	187.1162	454588.2637	679160.3393			198.2340	-0.020000
F-7	4106+95.9152	-92.8742	5307.0234	307.2993	-92.8742	195.9152	454587.3006	679169.0854			207.0330	-0.020000
F-8	4107+04.7142	-92.8742	5307.1084	307.3186	-92.8742	204.7142	454586.3375	679177.8316			215.8320	-0.020000
F-9	4107+13.5132	-92.8742	5307.1902	307.3084	-92.8742	213.5132	454585.3744	679186.5777			224.6310	-0.020000
BK BRG P2	4107+22.3122	-92.8742	5307.2690	307.2690	-92.8742	222.3122	454584.4112	679195.3238	-93.5373	-6 49 34.63	233.4300	-0.020000
CL P2	4107+23.3222	-92.8742	5307.2778		-92.8742	223.3222	454584.3007	679196.3277	-93.5373	-6 49 34.63	234.4400	-0.020000
AH BRG P2	4107+24.3222	-92.8742	5307.2865	307.2865	-92.8742	224.3222	454584.1912	679197.3217	-93.5373	-6 49 34.63	235.4400	-0.020000
F-1	4107+30.8222	-92.8742	5307.3421	307.3772	-92.8742	230.8222	454583.4798	679203.7827			241.9400	-0.020000
F-2	4107+37.3222	-92.8742	5307.3961	307.4585	-92.8742	237.3222	454582.7683	679210.2436			248.4400	-0.020000
F-3	4107+43.8222	-92.8742	5307.4483	307.5302	-92.8742	243.8222	454582.0568	679216.7046			254.9400	-0.020000
F-4	4107+50.3222	-92.8742	5307.4989	307.5924	-92.8742	250.3222	454581.3454	679223.1655			261.4400	-0.020000
F-5	4107+56.8222	-92.8742	5307.5477	307.6452	-92.8742	256.8222	454580.6339	679229.6265			267.9400	-0.020000
F-6	4107+63.3222	-92.8742	5307.5948	307.6884	-92.8742	263.3222	454579.9225	679236.0874			274.4400	-0.020000
F-7	4107+69.8222	-92.8742	5307.6403	307.7222	-92.8742	269.8222	454579.2110	679242.5484			280.9400	-0.020000
F-8	4107+76.3222	-92.8742	5307.6840	307.7464	-92.8742	276.3222	454578.4995	679249.0093			287.4400	-0.020000
F-9	4107+82.8222	-92.8742	5307.7261	307.7611	-92.8742	282.8222	454577.7881	679255.4702			293.9400	-0.020000
CL BRG EB3	4107+89.3222	-92.8742	5307.7664	307.7664	-92.8742	289.3222	454577.0766	679261.9312	-93.5373	-6 49 34.63	300.4400	-0.020000
BF EB3	4107+90.8322	-92.8742	5307.7755		-92.8742	290.8322	454576.9113	679263.4321	-93.5373	-6 49 34.63	301.9500	-0.020000

NOTES:
1. ELEVATIONS ARE AT TOP OF CONCRETE DECK 0.2500 FEET BELOW FINISHED GRADE.
2. POSITIVE ROADWAY CROSS SLOPE IS UPWARDS FROM THE PROFILE GRADE LINE.
3. THESE STATIONS, COORDINATES, OFFSETS AND LENGTHS DEFINE THE LAYOUT OF THE STRUCTURE IN A TWO DIMENSIONAL HORIZONTAL PLANE. ELEVATIONS DEFINE THE FINAL GRADE OF THE FINISHED CONCRETE DECK. FABRICATION OF STRUCTURAL COMPONENTS THROUGH THE DIRECT USE OF THIS INFORMATION IS NOT INTENDED OR ADVISABLE.

Design	INITIAL	DATE	Detail	INITIAL	DATE	Quantities	INITIAL	DATE
Designed By	CCH	05/15	Detailed By	MJW	05/15	Quantities By	JWG	05/15
Checked By	MAG	05/15	Checked By	CCH	05/15	Checked By	CCH	05/15

P:\1303354DB - I-70 over Havana DB\19339\Bridge\Drawings\19339BRDG_B139-45-DeckElev.dgn
DGN MODEL:Border1
6/29/2015 6:00:09 PM
isaiah.quintana

Print Date: 6/29/2015
File Name: 19339BRDG_B139-45-DeckElev.dgn
Horiz. Scale: None Vert. Scale: None
Staff Bridge Branch - Unit 0224 AJP

TSIOUVARAS SIMMONS HOLDERNESS

Sheet Revisions		
Date:	Comments	Init.

Colorado Department of Transportation
4670 N. Holly
Denver, CO 80216
Phone: 303-398-6767 FAX: 303-398-6781
Region 1 KK

As Constructed
No Revisions:
Revised:
Void:

I-70 OVER HAVANA STREET DESIGN-BUILD
I-70 BRIDGE OVER HAVANA
BRIDGE DECK ELEVATIONS (1 OF 7)

Designer: J. Garrison Structure Numbers E-17-VD
Detailer: M. Welch
Sheet Subset: Bridge 2 Subset Sheets: B39 of 45

Project No./Code
FBR 0704-230
19339
Sheet Number 77

RFC02 JUNE, 2015 (REVIEW)

GIRDER 3 — PARALLEL TO HORIZONTAL CONTROL — 0.250000 FEET BELOW FINISHED GRADE

BENT LINE	STATION	OFFSET	ELEVATION	ELEV+DL	X	Y	NORTHING	EASTING	BENT LNTH	SKEW	GIRDER LNTH	CRS-SLP
*REF LINE	4104+89.5880	-86.9784	5304.2570		-86.9784	-10.4120	454604.0240	678963.3526	-87.5994	-6 49 34.63	0.0000	-0.020000
BF EB1	4106+33.5180	-86.9784	5306.4496		-86.9784	133.5180	454588.2699	679106.4178	-87.5994	-6 49 34.63	143.9300	-0.020000
CL BRG EB1	4106+35.0280	-86.9784	5306.4682	306.4682	-86.9784	135.0280	454588.1047	679107.9187	-87.5994	-6 49 34.63	145.4400	-0.020000
F-1	4106+43.8270	-86.9784	5306.5747	306.6929	-86.9784	143.8270	454587.1416	679116.6649			154.2390	-0.020000
F-2	4106+52.6260	-86.9784	5306.6781	306.8883	-86.9784	152.6260	454586.1785	679125.4110			163.0380	-0.020000
F-3	4106+61.4250	-86.9784	5306.7784	307.0542	-86.9784	161.4250	454585.2153	679134.1571			171.8370	-0.020000
F-4	4106+70.2240	-86.9784	5306.8755	307.1907	-86.9784	170.2240	454584.2522	679142.9032			180.6360	-0.020000
F-5	4106+79.0230	-86.9784	5306.9695	307.2978	-86.9784	179.0230	454583.2891	679151.6494			189.4350	-0.020000
F-6	4106+87.8220	-86.9784	5307.0605	307.3757	-86.9784	187.8220	454582.3260	679160.3955			198.2340	-0.020000
F-7	4106+96.6210	-86.9784	5307.1483	307.4241	-86.9784	196.6210	454581.3629	679169.1416			207.0330	-0.020000
F-8	4107+05.4200	-86.9784	5307.2330	307.4432	-86.9784	205.4200	454580.3998	679177.8878			215.8320	-0.020000
F-9	4107+14.2190	-86.9784	5307.3146	307.4328	-86.9784	214.2190	454579.4367	679186.6339			224.6310	-0.020000
BK BRG P2	4107+23.0180	-86.9784	5307.3931	307.3931	-86.9784	223.0180	454578.4736	679195.3800	-87.5994	-6 49 34.63	233.4300	-0.020000
CL P2	4107+24.0280	-86.9784	5307.4019		-86.9784	224.0280	454578.3631	679196.3840	-87.5994	-6 49 34.63	234.4400	-0.020000
AH BRG P2	4107+25.0280	-86.9784	5307.4106	307.4106	-86.9784	225.0280	454578.2536	679197.3780	-87.5994	-6 49 34.63	235.4400	-0.020000
F-1	4107+31.5280	-86.9784	5307.4660	307.5011	-86.9784	231.5280	454577.5421	679203.8389			241.9400	-0.020000
F-2	4107+38.0280	-86.9784	5307.5198	307.5822	-86.9784	238.0280	454576.8307	679210.2999			248.4400	-0.020000
F-3	4107+44.5280	-86.9784	5307.5718	307.6537	-86.9784	244.5280	454576.1192	679216.7608			254.9400	-0.020000
F-4	4107+51.0280	-86.9784	5307.6222	307.7158	-86.9784	251.0280	454575.4078	679223.2217			261.4400	-0.020000
F-5	4107+57.5280	-86.9784	5307.6708	307.7683	-86.9784	257.5280	454574.6963	679229.6827			267.9400	-0.020000
F-6	4107+64.0280	-86.9784	5307.7178	307.8114	-86.9784	264.0280	454573.9848	679236.1436			274.4400	-0.020000
F-7	4107+70.5280	-86.9784	5307.7630	307.8449	-86.9784	270.5280	454573.2734	679242.6046			280.9400	-0.020000
F-8	4107+77.0280	-86.9784	5307.8066	307.8690	-86.9784	277.0280	454572.5619	679249.0655			287.4400	-0.020000
F-9	4107+83.5280	-86.9784	5307.8484	307.8835	-86.9784	283.5280	454571.8504	679255.5265			293.9400	-0.020000
CL BRG EB3	4107+90.0280	-86.9784	5307.8886	307.8886	-86.9784	290.0280	454571.1390	679261.9874	-87.5994	-6 49 34.63	300.4400	-0.020000
BF EB3	4107+91.5380	-86.9784	5307.8977		-86.9784	291.5380	454570.9737	679263.4883	-87.5994	-6 49 34.63	301.9500	-0.020000

GIRDER 4 — PARALLEL TO HORIZONTAL CONTROL — 0.250000 FEET BELOW FINISHED GRADE

BENT LINE	STATION	OFFSET	ELEVATION	ELEV+DL	X	Y	NORTHING	EASTING	BENT LNTH	SKEW	GIRDER LNTH	CRS-SLP
*REF LINE	4104+90.2938	-81.0826	5304.3877		-81.0826	-9.7062	454598.0863	678963.4088	-81.6615	-6 49 34.63	0.0000	-0.020000
BF EB1	4106+34.2238	-81.0826	5306.5762		-81.0826	134.2238	454582.3323	679106.4740	-81.6615	-6 49 34.63	143.9300	-0.020000
CL BRG EB1	4106+35.7338	-81.0826	5306.5948	306.5948	-81.0826	135.7338	454582.1670	679107.9749	-81.6615	-6 49 34.63	145.4400	-0.020000
F-1	4106+44.5328	-81.0826	5306.7010	306.8192	-81.0826	144.5328	454581.2039	679116.7211			154.2390	-0.020000
F-2	4106+53.3318	-81.0826	5306.8042	307.0143	-81.0826	153.3318	454580.2408	679125.4672			163.0380	-0.020000
F-3	4106+62.1308	-81.0826	5306.9042	307.1800	-81.0826	162.1308	454579.2777	679134.2133			171.8370	-0.020000
F-4	4106+70.9298	-81.0826	5307.0011	307.3163	-81.0826	170.9298	454578.3146	679142.9595			180.6360	-0.020000
F-5	4106+79.7288	-81.0826	5307.0949	307.4232	-81.0826	179.7288	454577.3515	679151.7056			189.4350	-0.020000
F-6	4106+88.5278	-81.0826	5307.1856	307.5007	-81.0826	188.5278	454576.3884	679160.4517			198.2340	-0.020000
F-7	4106+97.3268	-81.0826	5307.2731	307.5490	-81.0826	197.3268	454575.4253	679169.1979			207.0330	-0.020000
F-8	4107+06.1258	-81.0826	5307.3576	307.5677	-81.0826	206.1258	454574.4622	679177.9440			215.8320	-0.020000
F-9	4107+14.9248	-81.0826	5307.4389	307.5571	-81.0826	214.9248	454573.4991	679186.6901			224.6310	-0.020000
BK BRG P2	4107+23.7238	-81.0826	5307.5171	307.5171	-81.0826	223.7238	454572.5360	679195.4363	-81.6615	-6 49 34.63	233.4300	-0.020000
CL P2	4107+24.7338	-81.0826	5307.5259		-81.0826	224.7338	454572.4254	679196.4402	-81.6615	-6 49 34.63	234.4400	-0.020000
AH BRG P2	4107+25.7338	-81.0826	5307.5346	307.5346	-81.0826	225.7338	454572.3160	679197.4342	-81.6615	-6 49 34.63	235.4400	-0.020000
F-1	4107+32.2338	-81.0826	5307.5898	307.6249	-81.0826	232.2338	454571.6045	679203.8951			241.9400	-0.020000
F-2	4107+38.7338	-81.0826	5307.6434	307.7058	-81.0826	238.7338	454570.8931	679210.3561			248.4400	-0.020000
F-3	4107+45.2338	-81.0826	5307.6953	307.7772	-81.0826	245.2338	454570.1816	679216.8170			254.9400	-0.020000
F-4	4107+51.7338	-81.0826	5307.7454	307.8390	-81.0826	251.7338	454569.4701	679223.2780			261.4400	-0.020000
F-5	4107+58.2338	-81.0826	5307.7939	307.8914	-81.0826	258.2338	454568.7587	679229.7389			267.9400	-0.020000
F-6	4107+64.7338	-81.0826	5307.8407	307.9343	-81.0826	264.7338	454568.0472	679236.1999			274.4400	-0.020000
F-7	4107+71.2338	-81.0826	5307.8857	307.9677	-81.0826	271.2338	454567.3357	679242.6608			280.9400	-0.020000
F-8	4107+77.7338	-81.0826	5307.9291	307.9915	-81.0826	277.7338	454566.6243	679249.1218			287.4400	-0.020000
F-9	4107+84.2338	-81.0826	5307.9708	308.0059	-81.0826	284.2338	454565.9128	679255.5827			293.9400	-0.020000
CL BRG EB3	4107+90.7338	-81.0826	5308.0108	308.0108	-81.0826	290.7338	454565.2013	679262.0436	-81.6615	-6 49 34.63	300.4400	-0.020000
BF EB3	4107+92.2438	-81.0826	5308.0198		-81.0826	292.2438	454565.0361	679263.5446	-81.6615	-6 49 34.63	301.9500	-0.020000

GIRDER 5 — PARALLEL TO HORIZONTAL CONTROL — 0.250000 FEET BELOW FINISHED GRADE

BENT LINE	STATION	OFFSET	ELEVATION	ELEV+DL	X	Y	NORTHING	EASTING	BENT LNTH	SKEW	GIRDER LNTH	CRS-SLP
*REF LINE	4104+90.9995	-75.1868	5304.5184		-75.1868	-9.0005	454592.1487	678963.4649	-75.7236	-6 49 34.63	0.0000	-0.020000
BF EB1	4106+34.9295	-75.1868	5306.7028		-75.1868	134.9295	454576.3947	679106.5301	-75.7236	-6 49 34.63	143.9300	-0.020000
CL BRG EB1	4106+36.4395	-75.1868	5306.7213	306.7213	-75.1868	136.4395	454576.2294	679108.0311	-75.7236	-6 49 34.63	145.4400	-0.020000
F-1	4106+45.2385	-75.1868	5306.8273	306.9455	-75.1868	145.2385	454575.2663	679116.7772			154.2390	-0.020000
F-2	4106+54.0375	-75.1868	5306.9302	307.1404	-75.1868	154.0375	454574.3032	679125.5233			163.0380	-0.020000
F-3	4106+62.8365	-75.1868	5307.0300	307.3058	-75.1868	162.8365	454573.3401	679134.2695			171.8370	-0.020000
F-4	4106+71.6355	-75.1868	5307.1266	307.4418	-75.1868	171.6355	454572.3770	679143.0156			180.6360	-0.020000
F-5	4106+80.4345	-75.1868	5307.2202	307.5485	-75.1868	180.4345	454571.4139	679151.7617			189.4350	-0.020000
F-6	4106+89.2335	-75.1868	5307.3106	307.6258	-75.1868	189.2335	454570.4508	679160.5079			198.2340	-0.020000
F-7	4106+98.0325	-75.1868	5307.3979	307.6738	-75.1868	198.0325	454569.4877	679169.2540			207.0330	-0.020000
F-8	4107+06.8315	-75.1868	5307.4821	307.6923	-75.1868	206.8315	454568.5246	679178.0001			215.8320	-0.020000
F-9	4107+15.6305	-75.1868	5307.5632	307.6814	-75.1868	215.6305	454567.5615	679186.7463			224.6310	-0.020000
BK BRG P2	4107+24.4295	-75.1868	5307.6412	307.6412	-75.1868	224.4295	454566.5984	679195.4924	-75.7236	-6 49 34.63	233.4300	-0.020000
CL P2	4107+25.4395	-75.1868	5307.6499		-75.1868	225.4395	454566.4878	679196.4963	-75.7236	-6 49 34.63	234.4400	-0.020000
AH BRG P2	4107+26.4395	-75.1868	5307.6586	307.6586	-75.1868	226.4395	454566.3784	679197.4903	-75.7236	-6 49 34.63	235.4400	-0.020000
F-1	4107+32.9395	-75.1868	5307.7137	307.7487	-75.1868	232.9395	454565.6669	679203.9513			241.9400	-0.020000
F-2	4107+39.4395	-75.1868	5307.7670	307.8294	-75.1868	239.4395	454564.9554	679210.4122			248.4400	-0.020000
F-3	4107+45.9395	-75.1868	5307.8187	307.9006	-75.1868	245.9395	454564.2440	679216.8732			254.9400	-0.020000
F-4	4107+52.4395	-75.1868	5307.8687	307.9623	-75.1868	252.4395	454563.5325	679223.3341			261.4400	-0.020000
F-5	4107+58.9395	-75.1868	5307.9170	308.0145	-75.1868	258.9395	454562.8210	679229.7951			267.9400	-0.020000
F-6	4107+65.4395	-75.1868	5307.9636	308.0572	-75.1868	265.4395	454562.1096	679236.2560			274.4400	-0.020000
F-7	4107+71.9395	-75.1868	5308.0085	308.0904	-75.1868	271.9395	454561.3981	679242.7169			280.9400	-0.020000
F-8	4107+78.4395	-75.1868	5308.0516	308.1141	-75.1868	278.4395	454560.6866	679249.1779			287.4400	-0.020000
F-9	4107+84.9395	-75.1868	5308.0931	308.1282	-75.1868	284.9395	454559.9752	679255.6388			293.9400	-0.020000
CL BRG EB3	4107+91.4395	-75.1868	5308.1329	308.1329	-75.1868	291.4395	454559.2637	679262.0998	-75.7236	-6 49 34.63	300.4400	-0.020000
BF EB3	4107+92.9495	-75.1868	5308.1419		-75.1868	292.9495	454559.0984	679263.6007	-75.7236	-6 49 34.63	301.9500	-0.020000

GIRDER 6 — PARALLEL TO HORIZONTAL CONTROL — 0.250000 FEET BELOW FINISHED GRADE

BENT LINE	STATION	OFFSET	ELEVATION	ELEV+DL	X	Y	NORTHING	EASTING	BENT LNTH	SKEW	GIRDER LNTH	CRS-SLP
*REF LINE	4104+91.7053	-69.2910	5304.6491		-69.2910	-8.2947	454586.2111	678963.5212	-69.7857	-6 49 34.63	0.0000	-0.020000
BF EB1	4106+35.6353	-69.2910	5306.8294		-69.2910	135.6353	454570.4571	679106.5864	-69.7857	-6 49 34.63	143.9300	-0.020000
CL BRG EB1	4106+37.1453	-69.2910	5306.8479	306.8479	-69.2910	137.1453	454570.2918	679108.0873	-69.7857	-6 49 34.63	145.4400	-0.020000
F-1	4106+45.9443	-69.2910	5306.9536	307.0718	-69.2910	145.9443	454569.3287	679116.8334			154.2390	-0.020000
F-2	4106+54.7433	-69.2910	5307.0562	307.2664	-69.2910	154.7433	454568.3656	679125.5796			163.0380	-0.020000
F-3	4106+63.5423	-69.2910	5307.1558	307.4316	-69.2910	163.5423	454567.4025	679134.3257			171.8370	-0.020000
F-4	4106+72.3413	-69.2910	5307.2522	307.5674	-69.2910	172.3413	454566.4394	679143.0718			180.6360	-0.020000
F-5	4106+81.1403	-69.2910	5307.3455	307.6738	-69.2910	181.1403	454565.4763	679151.8180			189.4350	-0.020000
F-6	4106+89.9393	-69.2910	5307.4356	307.7508	-69.2910	189.9393	454564.5132	679160.5641			198.2340	-0.020000
F-7	4106+98.7383	-69.2910	5307.5227	307.7985	-69.2910	198.7383	454563.5501	679169.3102			207.0330	-0.020000
F-8	4107+07.5373	-69.2910	5307.6067	307.8168	-69.2910	207.5373	454562.5869	679178.0564			215.8320	-0.020000
F-9	4107+16.3363	-69.2910	5307.6875	307.8057	-69.2910	216.3363	454561.6238	679186.8025			224.6310	-0.020000
BK BRG P2	4107+25.1353	-69.2910	5307.7652	307.7652	-69.2910	225.1353	454560.6607	679195.5486	-69.7857	-6 49 34.63	233.4300	-0.020000
CL P2	4107+26.1453	-69.2910	5307.7740		-69.2910	226.1453	454560.5502	679196.5526	-69.7857	-6 49 34.63	234.4400	-0.020000
AH BRG P2	4107+27.1453	-69.2910	5307.7826	307.7826	-69.2910	227.1453	454560.4407	679197.5466	-69.7857	-6 49 34.63	235.4400	-0.020000
F-1	4107+33.6453	-69.2910	5307.8374	307.8725	-69.2910	233.6453	454559.7293	679204.0075			241.9400	-0.020000
F-2	4107+40.1453	-69.2910	5307.8906	307.9531	-69.2910	240.1453	454559.0178	679210.4684			248.4400	-0.020000
F-3	4107+46.6453	-69.2910	5307.9421	308.0241	-69.2910	246.6453	454558.3063	679216.9294			254.9400	-0.020000
F-4	4107+53.1453	-69.2910	5307.9919	308.0855	-69.2910	253.1453	454557.5949	679223.3903			261.4400	-0.020000
F-5	4107+59.6453	-69.2910	5308.0400	308.1375	-69.2910	259.6453	454556.8834	679229.8513			267.9400	-0.020000
F-6	4107+66.1453	-69.2910	5308.0864	308.1800	-69.2910	266.1453	454556.1719	679236.3122			274.4400	-0.020000
F-7	4107+72.6453	-69.2910	5308.1311	308.2131	-69.2910	272.6453	454555.4605	679242.7732			280.9400	-0.020000
F-8	4107+79.1453	-69.2910	5308.1741	308.2366	-69.2910	279.1453	454554.7490	679249.2341			287.4400	-0.020000
F-9	4107+85.6453	-69.2910	5308.2155	308.2505	-69.2910	285.6453	454554.0375	679255.6951			293.9400	-0.020000
CL BRG EB3	4107+92.1453	-69.2910	5308.2551	308.2551	-69.2910	292.1453	454553.3261	679262.1560	-69.7857	-6 49 34.63	300.4400	-0.020000
BF EB3	4107+93.6553	-69.2910	5308.2640		-69.2910	293.6553	454553.1608	679263.6569	-69.7857	-6 49 34.63	301.9500	-0.020000

GIRDER 7 — PARALLEL TO HORIZONTAL CONTROL — 0.250000 FEET BELOW FINISHED GRADE

BENT LINE	STATION	OFFSET	ELEVATION	ELEV+DL	X	Y	NORTHING	EASTING	BENT LNTH	SKEW	GIRDER LNTH	CRS-SLP
*REF LINE	4104+92.4111	-63.3952	5304.7797		-63.3952	-7.5889	454580.2734	678963.5774	-63.8478	-6 49 34.63	0.0000	-0.020000
BF EB1	4106+36.3411	-63.3952	5306.9560		-63.3952	136.3411	454564.5194	679106.6426	-63.8478	-6 49 34.63	143.9300	-0.020000
CL BRG EB1	4106+37.8511	-63.3952	5306.9744	306.9744	-63.3952	137.8511	454564.3542	679108.1435	-63.8478	-6 49 34.63	145.4400	-0.020000
F-1	4106+46.6501	-63.3952	5307.0799	307.1980	-63.3952	146.6501	454563.3910	679116.8897			154.2390	-0.020000
F-2	4106+55.4491	-63.3952	5307.1823	307.3924	-63.3952	155.4491	454562.4279	679125.6358			163.0380	-0.020000
F-3	4106+64.2481	-63.3952	5307.2815	307.5574	-63.3952	164.2481	454561.4648	679134.3819			171.8370	-0.020000
F-4	4106+73.0471	-63.3952	5307.3777	307.6929	-63.3952	173.0471	454560.5017	679143.1281			180.6360	-0.020000
F-5	4106+81.8461	-63.3952	5307.4707	307.7990	-63.3952	181.8461	454559.5386	679151.8742			189.4350	-0.020000
F-6	4106+90.6451	-63.3952	5307.5607	307.8758	-63.3952	190.6451	454558.5755	679160.6203			198.2340	-0.020000
F-7	4106+99.4441	-63.3952	5307.6475	307.9233	-63.3952	199.4441	454557.6124	679169.3665			207.0330	-0.020000
F-8	4107+08.2431	-63.3952	5307.7312	307.9413	-63.3952	208.2431	454556.6493	679178.1126			215.8320	-0.020000
F-9	4107+17.0421	-63.3952	5307.8118	307.9299	-63.3952	217.0421	454555.6862	679186.8587			224.6310	-0.020000
BK BRG P2	4107+25.8411	-63.3952	5307.8892	307.8892	-63.3952	225.8411	454554.7231	679195.6049	-63.8478	-6 49 34.63	233.4300	-0.020000
CL P2	4107+26.8511	-63.3952	5307.8979		-63.3952	226.8511	454554.6126	679196.6088	-63.8478	-6 49 34.63	234.4400	-0.020000
AH BRG P2	4107+27.8511	-63.3952	5307.9065	307.9065	-63.3952	227.8511	454554.5031	679197.6028	-63.8478	-6 49 34.63	235.4400	-0.020000
F-1	4107+34.3511	-63.3952	5307.9612	307.9963	-63.3952	234.3511	454553.7916	679204.0637			241.9400	-0.020000
F-2	4107+40.8511	-63.3952	5308.0142	308.0766	-63.3952	240.8511	454553.0802	679210.5247			248.4400	-0.020000
F-3	4107+47.3511	-63.3952	5308.0655	308.1475	-63.3952	247.3511	454552.3687	679216.9856			254.9400	-0.020000
F-4	4107+53.8511	-63.3952	5308.1152	308.2088	-63.3952	253.8511	454551.6572	679223.4466			261.4400	-0.020000
F-5	4107+60.3511	-63.3952	5308.1631	308.2606	-63.3952	260.3511	454550.9458	679229.9075			267.9400	-0.020000
F-6	4107+66.8511	-63.3952	5308.2093	308.3029	-63.3952	266.8511	454550.2343	679236.3685			274.4400	-0.020000
F-7	4107+73.3511	-63.3952	5308.2538	308.3357	-63.3952	273.3511	454549.5228	679242.8294			280.9400	-0.020000
F-8	4107+79.8511	-63.3952	5308.2966	308.3590	-63.3952	279.8511	454548.8114	679249.2903			287.4400	-0.020000
F-9	4107+86.3511	-63.3952	5308.3378	308.3728	-63.3952	286.3511	454548.0999	679255.7513			293.9400	-0.020000
CL BRG EB3	4107+92.8511	-63.3952	5308.3772	308.3772	-63.3952	292.8511	454547.3885	679262.2122	-63.8478	-6 49 34.63	300.4400	-0.020000
BF EB3	4107+94.3611	-63.3952	5308.3861		-63.3952	294.3611	454547.2232	679263.7132	-63.8478	-6 49 34.63	301.9500	-0.020000

GIRDER 8 — PARALLEL TO HORIZONTAL CONTROL — 0.250000 FEET BELOW FINISHED GRADE

BENT LINE	STATION	OFFSET	ELEVATION	ELEV+DL	X	Y	NORTHING	EASTING	BENT LNTH	SKEW	GIRDER LNTH	CRS-SLP
*REF LINE	4104+93.1169	-57.4994	5304.9103		-57.4994	-6.8831	454574.3358	678963.6336	-57.9099	-6 49 34.63	0.0000	-0.020000
BF EB1	4106+37.0469	-57.4994	5307.0825		-57.4994	137.0469	454558.5818	679106.6988	-57.9099	-6 49 34.63	143.9300	-0.020000
CL BRG EB1	4106+38.5569	-57.4994	5307.1009	307.1009	-57.4994	138.5569	454558.4165	679108.1998	-57.9099	-6 49 34.63	145.4400	-0.020000
F-1	4106+47.3559	-57.4994	5307.2061	307.3243	-57.4994	147.3559	454557.4534	679116.9459			154.2390	-0.020000
F-2	4106+56.1549	-57.4994	5307.3083	307.5184	-57.4994	156.1549	454556.4903	679125.6920			163.0380	-0.020000
F-3	4106+64.9539	-57.4994	5307.4073	307.6831	-57.4994	164.9539	454555.5272	679134.4382			171.8370	-0.020000
F-4	4106+73.7529	-57.4994	5307.5032	307.8184	-57.4994	173.7529	454554.5641	679143.1843			180.6360	-0.020000
F-5	4106+82.5519	-57.4994	5307.5960	307.9243	-57.4994	182.5519	454553.6010	679151.9304			189.4350	-0.020000
F-6	4106+91.3509	-57.4994	5307.6857	308.0008	-57.4994	191.3509	454552.6379	679160.6766			198.2340	-0.020000
F-7	4107+00.1499	-57.4994	5307.7722	308.0480	-57.4994	200.1499	454551.6748	679169.4227			207.0330	-0.020000
F-8	4107+08.9489	-57.4994	5307.8557	308.0658	-57.4994	208.9489	454550.7117	679178.1688			215.8320	-0.020000
F-9	4107+17.7479	-57.4994	5307.9360	308.0542	-57.4994	217.7479	454549.7486	679186.9150			224.6310	-0.020000
BK BRG P2	4107+26.5469	-57.4994	5308.0132	308.0132	-57.4994	226.5469	454548.7855	679195.6611	-57.9099	-6 49 34.63	233.4300	-0.020000
CL P2	4107+27.5569	-57.4994	5308.0219		-57.4994	227.5569	454548.6749	679196.6650	-57.9099	-6 49 34.63	234.4400	-0.020000
AH BRG P2	4107+28.5569	-57.4994	5308.0304	308.0304	-57.4994	228.5569	454548.5655	679197.6590	-57.9099	-6 49 34.63	235.4400	-0.020000
F-1	4107+35.0569	-57.4994	5308.0850	308.1201	-57.4994	235.0569	454547.8540	679204.1200			241.9400	-0.020000
F-2	4107+41.5569	-57.4994	5308.1378	308.2002	-57.4994	241.5569	454547.1425	679210.5809			248.4400	-0.020000
F-3	4107+48.0569	-57.4994	5308.1889	308.2708	-57.4994	248.0569	454546.4311	679217.0418			254.9400	-0.020000
F-4	4107+54.5569	-57.4994	5308.2384	308.3320	-57.4994	254.5569	454545.7196	679223.5028			261.4400	-0.020000
F-5	4107+61.0569	-57.4994	5308.2861	308.3836	-57.4994	261.0569	454545.0081	679229.9637			267.9400	-0.020000
F-6	4107+67.5569	-57.4994	5308.3321	308.4257	-57.4994	267.5569	454544.2967	679236.4247			274.4400	-0.020000
F-7	4107+74.0569	-57.4994	5308.3765	308.4584	-57.4994	274.0569	454543.5852	679242.8856			280.9400	-0.020000
F-8	4107+80.5569	-57.4994	5308.4191	308.4815	-57.4994	280.5569	454542.8738	679249.3466			287.4400	-0.020000
F-9	4107+87.0569	-57.4994	5308.4600	308.4951	-57.4994	287.0569	454542.1623	679255.8075			293.9400	-0.020000
CL BRG EB3	4107+93.5569	-57.4994	5308.4993	308.4993	-57.4994	293.5569	454541.4508	679262.2685	-57.9099	-6 49 34.63	300.4400	-0.020000
BF EB3	4107+95.0669	-57.4994	5308.5081		-57.4994	295.0669	454541.2855	679263.7694	-57.9099	-6 49 34.63	301.9500	-0.020000

NOTES:
1. ELEVATIONS ARE AT TOP OF CONCRETE DECK 0.2500 FEET BELOW FINISHED GRADE.
2. POSITIVE ROADWAY CROSS SLOPE IS UPWARDS FROM THE PROFILE GRADE LINE.
3. THESE STATIONS, COORDINATES, OFFSETS AND LENGTHS DEFINE THE LAYOUT OF THE STRUCTURE IN A TWO DIMENSIONAL HORIZONTAL PLANE. ELEVATIONS DEFINE THE FINAL GRADE OF THE FINISHED CONCRETE DECK. FABRICATION OF STRUCTURAL COMPONENTS THROUGH THE DIRECT USE OF THIS INFORMATION IS NOT INTENDED OR ADVISABLE.

Design	INITIAL	DATE	Detail	INITIAL	DATE	Quantities	INITIAL	DATE
Designed By	CCH	05/15	Detailed By	MJW	05/15	Quantities By	JWG	05/15
Checked By	MAG	05/15	Checked By	CCH	05/15	Checked By	CCH	05/15

P:\1303354DB - I-70 over Havana DB\19339\Bridge\Drawings\19339BRDG_B139-45-DeckElev.dgn
6/29/2015 6:00:10 PM
DGN MODEL:Border2
isaiah.quintana

Print Date: 6/29/2015
File Name: 19339BRDG_B139-45-DeckElev.dgn
Horiz. Scale: None Vert. Scale: None
Staff Bridge Branch - Unit 0224 AJP
TSIOUVARAS SIMMONS HOLDERNESS

Sheet Revisions

Date:	Comments	Init.

Colorado Department of Transportation
4670 N. Holly
Denver, CO 80216
Phone: 303-398-6767 FAX: 303-398-6781
Region 1 KK

As Constructed
No Revisions:
Revised:
Void:

I-70 OVER HAVANA STREET DESIGN-BUILD
I-70 BRIDGE OVER HAVANA
BRIDGE DECK ELEVATIONS (2 OF 7)

Designer: J. Garrison
Detailer: M. Welch
Structure Numbers: E-17-VD
Sheet Subset: Bridge 2
Subset Sheets: B40 of 45

Project No./Code
FBR 0704-230
19339
Sheet Number 78

RFC02 JUNE, 2015 (REVIEW)

GIRDER 9 — PARALLEL TO HORIZONTAL CONTROL — 0.250000 FEET BELOW FINISHED GRADE

BENT LINE	STATION	OFFSET	ELEVATION	ELEV+DL	X	Y	NORTHING	EASTING	BENT LNTH	SKEW	GIRDER LNTH	CRS-SLP
*REF LINE	4104+93.8226	-51.6036	5305.0409		-51.6036	-6.1774	454568.3982	678963.6897	-51.9720	-6 49 34.63	0.0000	-0.020000
BF EB1	4106+37.7526	-51.6036	5307.2090		-51.6036	137.7526	454552.6442	679106.7550	-51.9720	-6 49 34.63	143.9300	-0.020000
CL BRG EB1	4106+39.2626	-51.6036	5307.2273	307.2273	-51.6036	139.2626	454552.4789	679108.2559	-51.9720	-6 49 34.63	145.4400	-0.020000
F-1	4106+48.0616	-51.6036	5307.3323	307.4505	-51.6036	148.0616	454551.5158	679117.0020			154.2390	-0.020000
F-2	4106+56.8606	-51.6036	5307.4342	307.6444	-51.6036	156.8606	454550.5527	679125.7482			163.0380	-0.020000
F-3	4106+65.6596	-51.6036	5307.5330	307.8088	-51.6036	165.6596	454549.5896	679134.4943			171.8370	-0.020000
F-4	4106+74.4586	-51.6036	5307.6287	307.9438	-51.6036	174.4586	454548.6265	679143.2404			180.6360	-0.020000
F-5	4106+83.2576	-51.6036	5307.7212	308.0495	-51.6036	183.2576	454547.6634	679151.9865			189.4350	-0.020000
F-6	4106+92.0566	-51.6036	5307.8106	308.1258	-51.6036	192.0566	454546.7003	679160.7327			198.2340	-0.020000
F-7	4107+00.8556	-51.6036	5307.8969	308.1728	-51.6036	200.8556	454545.7372	679169.4788			207.0330	-0.020000
F-8	4107+09.6546	-51.6036	5307.9801	308.1903	-51.6036	209.6546	454544.7741	679178.2249			215.8320	-0.020000
F-9	4107+18.4536	-51.6036	5308.0602	308.1784	-51.6036	218.4536	454543.8110	679186.9711			224.6310	-0.020000
BK BRG P2	4107+27.2526	-51.6036	5308.1372	308.1372	-51.6036	227.2526	454542.8479	679195.7172	-51.9720	-6 49 34.63	233.4300	-0.020000
CL P2	4107+28.2626	-51.6036	5308.1459		-51.6036	228.2626	454542.7373	679196.7211	-51.9720	-6 49 34.63	234.4400	-0.020000
AH BRG P2	4107+29.2626	-51.6036	5308.1544	308.1544	-51.6036	229.2626	454542.6279	679197.7151	-51.9720	-6 49 34.63	235.4400	-0.020000
F-1	4107+35.7626	-51.6036	5308.2087	308.2438	-51.6036	235.7626	454541.9164	679204.1761			241.9400	-0.020000
F-2	4107+42.2626	-51.6036	5308.2614	308.3238	-51.6036	242.2626	454541.2049	679210.6370			248.4400	-0.020000
F-3	4107+48.7626	-51.6036	5308.3123	308.3942	-51.6036	248.7626	454540.4935	679217.0980			254.9400	-0.020000
F-4	4107+55.2626	-51.6036	5308.3615	308.4551	-51.6036	255.2626	454539.7820	679223.5589			261.4400	-0.020000
F-5	4107+61.7626	-51.6036	5308.4091	308.5066	-51.6036	261.7626	454539.0705	679230.0199			267.9400	-0.020000
F-6	4107+68.2626	-51.6036	5308.4549	308.5485	-51.6036	268.2626	454538.3591	679236.4808			274.4400	-0.020000
F-7	4107+74.7626	-51.6036	5308.4991	308.5810	-51.6036	274.7626	454537.6476	679242.9418			280.9400	-0.020000
F-8	4107+81.2626	-51.6036	5308.5415	308.6040	-51.6036	281.2626	454536.9361	679249.4027			287.4400	-0.020000
F-9	4107+87.7626	-51.6036	5308.5823	308.6174	-51.6036	287.7626	454536.2247	679255.8636			293.9400	-0.020000
CL BRG EB3	4107+94.2626	-51.6036	5308.6213	308.6213	-51.6036	294.2626	454535.5132	679262.3246	-51.9720	-6 49 34.63	300.4400	-0.020000
BF EB3	4107+95.7726	-51.6036	5308.6302		-51.6036	295.7726	454535.3479	679263.8255	-51.9720	-6 49 34.63	301.9500	-0.020000

GIRDER 10 — PARALLEL TO HORIZONTAL CONTROL — 0.250000 FEET BELOW FINISHED GRADE

BENT LINE	STATION	OFFSET	ELEVATION	ELEV+DL	X	Y	NORTHING	EASTING	BENT LNTH	SKEW	GIRDER LNTH	CRS-SLP
*REF LINE	4104+94.5284	-45.7078	5305.1715		-45.7078	-5.4716	454562.4606	678963.7460	-46.0341	-6 49 34.63	0.0000	-0.020000
BF EB1	4106+38.4584	-45.7078	5307.3355		-45.7078	138.4584	454546.7066	679106.8112	-46.0341	-6 49 34.63	143.9300	-0.020000
CL BRG EB1	4106+39.9684	-45.7078	5307.3538	307.3538	-45.7078	139.9684	454546.5413	679108.3121	-46.0341	-6 49 34.63	145.4400	-0.020000
F-1	4106+48.7674	-45.7078	5307.4585	307.5767	-45.7078	148.7674	454545.5782	679117.0582			154.2390	-0.020000
F-2	4106+57.5664	-45.7078	5307.5602	307.7703	-45.7078	157.5664	454544.6151	679125.8044			163.0380	-0.020000
F-3	4106+66.3654	-45.7078	5307.6587	307.9345	-45.7078	166.3654	454543.6520	679134.5505			171.8370	-0.020000
F-4	4106+75.1644	-45.7078	5307.7541	308.0693	-45.7078	175.1644	454542.6889	679143.2966			180.6360	-0.020000
F-5	4106+83.9634	-45.7078	5307.8464	308.1747	-45.7078	183.9634	454541.7258	679152.0428			189.4350	-0.020000
F-6	4106+92.7624	-45.7078	5307.9356	308.2508	-45.7078	192.7624	454540.7626	679160.7889			198.2340	-0.020000
F-7	4107+01.5614	-45.7078	5308.0216	308.2975	-45.7078	201.5614	454539.7995	679169.5350			207.0330	-0.020000
F-8	4107+10.3604	-45.7078	5308.1046	308.3148	-45.7078	210.3604	454538.8364	679178.2812			215.8320	-0.020000
F-9	4107+19.1594	-45.7078	5308.1844	308.3026	-45.7078	219.1594	454537.8733	679187.0273			224.6310	-0.020000
BK BRG P2	4107+27.9584	-45.7078	5308.2612	308.2612	-45.7078	227.9584	454536.9102	679195.7734	-46.0341	-6 49 34.63	233.4300	-0.020000
CL P2	4107+28.9684	-45.7078	5308.2698		-45.7078	228.9684	454536.7997	679196.7774	-46.0341	-6 49 34.63	234.4400	-0.020000
AH BRG P2	4107+29.9684	-45.7078	5308.2783	308.2783	-45.7078	229.9684	454536.6902	679197.7714	-46.0341	-6 49 34.63	235.4400	-0.020000
F-1	4107+36.4684	-45.7078	5308.3324	308.3675	-45.7078	236.4684	454535.9788	679204.2323			241.9400	-0.020000
F-2	4107+42.9684	-45.7078	5308.3849	308.4473	-45.7078	242.9684	454535.2673	679210.6933			248.4400	-0.020000
F-3	4107+49.4684	-45.7078	5308.4356	308.5176	-45.7078	249.4684	454534.5558	679217.1542			254.9400	-0.020000
F-4	4107+55.9684	-45.7078	5308.4847	308.5783	-45.7078	255.9684	454533.8444	679223.6151			261.4400	-0.020000
F-5	4107+62.4684	-45.7078	5308.5321	308.6295	-45.7078	262.4684	454533.1329	679230.0761			267.9400	-0.020000
F-6	4107+68.9684	-45.7078	5308.5777	308.6713	-45.7078	268.9684	454532.4214	679236.5370			274.4400	-0.020000
F-7	4107+75.4684	-45.7078	5308.6217	308.7036	-45.7078	275.4684	454531.7100	679242.9980			280.9400	-0.020000
F-8	4107+81.9684	-45.7078	5308.6640	308.7264	-45.7078	281.9684	454530.9985	679249.4589			287.4400	-0.020000
F-9	4107+88.4684	-45.7078	5308.7045	308.7396	-45.7078	288.4684	454530.2870	679255.9199			293.9400	-0.020000
CL BRG EB3	4107+94.9684	-45.7078	5308.7434	308.7434	-45.7078	294.9684	454529.5756	679262.3808	-46.0341	-6 49 34.63	300.4400	-0.020000
BF EB3	4107+96.4784	-45.7078	5308.7522		-45.7078	296.4784	454529.4103	679263.8817	-46.0341	-6 49 34.63	301.9500	-0.020000

GIRDER 11 — PARALLEL TO HORIZONTAL CONTROL — 0.250000 FEET BELOW FINISHED GRADE

BENT LINE	STATION	OFFSET	ELEVATION	ELEV+DL	X	Y	NORTHING	EASTING	BENT LNTH	SKEW	GIRDER LNTH	CRS-SLP
*REF LINE	4104+95.2342	-39.8120	5305.3021		-39.8120	-4.7658	454556.5229	678963.8022	-40.0962	-6 49 34.63	0.0000	-0.020000
BF EB1	4106+39.1642	-39.8120	5307.4620		-39.8120	139.1642	454540.7689	679106.8674	-40.0962	-6 49 34.63	143.9300	-0.020000
CL BRG EB1	4106+40.6742	-39.8120	5307.4802	307.4802	-39.8120	140.6742	454540.6036	679108.3683	-40.0962	-6 49 34.63	145.4400	-0.020000
F-1	4106+49.4732	-39.8120	5307.5847	307.7029	-39.8120	149.4732	454539.6405	679117.1145			154.2390	-0.020000
F-2	4106+58.2722	-39.8120	5307.6861	307.8963	-39.8120	158.2722	454538.6774	679125.8606			163.0380	-0.020000
F-3	4106+67.0712	-39.8120	5307.7844	308.0602	-39.8120	167.0712	454537.7143	679134.6067			171.8370	-0.020000
F-4	4106+75.8702	-39.8120	5307.8795	308.1947	-39.8120	175.8702	454536.7512	679143.3529			180.6360	-0.020000
F-5	4106+84.6692	-39.8120	5307.9716	308.2999	-39.8120	184.6692	454535.7881	679152.0990			189.4350	-0.020000
F-6	4106+93.4682	-39.8120	5308.0605	308.3757	-39.8120	193.4682	454534.8250	679160.8451			198.2340	-0.020000
F-7	4107+02.2672	-39.8120	5308.1463	308.4222	-39.8120	202.2672	454533.8619	679169.5913			207.0330	-0.020000
F-8	4107+11.0662	-39.8120	5308.2290	308.4392	-39.8120	211.0662	454532.8988	679178.3374			215.8320	-0.020000
F-9	4107+19.8652	-39.8120	5308.3086	308.4268	-39.8120	219.8652	454531.9357	679187.0835			224.6310	-0.020000
BK BRG P2	4107+28.6642	-39.8120	5308.3851	308.3851	-39.8120	228.6642	454530.9726	679195.8297	-40.0962	-6 49 34.63	233.4300	-0.020000
CL P2	4107+29.6742	-39.8120	5308.3937		-39.8120	229.6742	454530.8620	679196.8336	-40.0962	-6 49 34.63	234.4400	-0.020000
AH BRG P2	4107+30.6742	-39.8120	5308.4021	308.4021	-39.8120	230.6742	454530.7526	679197.8276	-40.0962	-6 49 34.63	235.4400	-0.020000
F-1	4107+37.1742	-39.8120	5308.4561	308.4912	-39.8120	237.1742	454530.0411	679204.2885			241.9400	-0.020000
F-2	4107+43.6742	-39.8120	5308.5084	308.5708	-39.8120	243.6742	454529.3297	679210.7495			248.4400	-0.020000
F-3	4107+50.1742	-39.8120	5308.5590	308.6409	-39.8120	250.1742	454528.6182	679217.2104			254.9400	-0.020000
F-4	4107+56.6742	-39.8120	5308.6078	308.7014	-39.8120	256.6742	454527.9067	679223.6714			261.4400	-0.020000
F-5	4107+63.1742	-39.8120	5308.6550	308.7525	-39.8120	263.1742	454527.1953	679230.1323			267.9400	-0.020000
F-6	4107+69.6742	-39.8120	5308.7005	308.7941	-39.8120	269.6742	454526.4838	679236.5933			274.4400	-0.020000
F-7	4107+76.1742	-39.8120	5308.7443	308.8262	-39.8120	276.1742	454525.7723	679243.0542			280.9400	-0.020000
F-8	4107+82.6742	-39.8120	5308.7864	308.8488	-39.8120	282.6742	454525.0609	679249.5152			287.4400	-0.020000
F-9	4107+89.1742	-39.8120	5308.8267	308.8618	-39.8120	289.1742	454524.3494	679255.9761			293.9400	-0.020000
CL BRG EB3	4107+95.6742	-39.8120	5308.8654	308.8654	-39.8120	295.6742	454523.6379	679262.4370	-40.0962	-6 49 34.63	300.4400	-0.020000
BF EB3	4107+97.1842	-39.8120	5308.8742		-39.8120	297.1842	454523.4727	679263.9380	-40.0962	-6 49 34.63	301.9500	-0.020000

GIRDER 12 — PARALLEL TO HORIZONTAL CONTROL — 0.250000 FEET BELOW FINISHED GRADE

BENT LINE	STATION	OFFSET	ELEVATION	ELEV+DL	X	Y	NORTHING	EASTING	BENT LNTH	SKEW	GIRDER LNTH	CRS-SLP
*REF LINE	4104+95.9400	-33.9162	5305.4326		-33.9162	-4.0600	454550.5853	678963.8584	-34.1583	-6 49 34.63	0.0000	-0.020000
BF EB1	4106+39.8700	-33.9162	5307.5884		-33.9162	139.8700	454534.8313	679106.9236	-34.1583	-6 49 34.63	143.9300	-0.020000
CL BRG EB1	4106+41.3800	-33.9162	5307.6066	307.6066	-33.9162	141.3800	454534.6660	679108.4246	-34.1583	-6 49 34.63	145.4400	-0.020000
F-1	4106+50.1790	-33.9162	5307.7109	307.8291	-33.9162	150.1790	454533.7029	679117.1707			154.2390	-0.020000
F-2	4106+58.9780	-33.9162	5307.8120	308.0222	-33.9162	158.9780	454532.7398	679125.9168			163.0380	-0.020000
F-3	4106+67.7770	-33.9162	5307.9100	308.1859	-33.9162	167.7770	454531.7767	679134.6630			171.8370	-0.020000
F-4	4106+76.5760	-33.9162	5308.0050	308.3201	-33.9162	176.5760	454530.8136	679143.4091			180.6360	-0.020000
F-5	4106+85.3750	-33.9162	5308.0967	308.4250	-33.9162	185.3750	454529.8505	679152.1552			189.4350	-0.020000
F-6	4106+94.1740	-33.9162	5308.1854	308.5006	-33.9162	194.1740	454528.8874	679160.9014			198.2340	-0.020000
F-7	4107+02.9730	-33.9162	5308.2710	308.5468	-33.9162	202.9730	454527.9243	679169.6475			207.0330	-0.020000
F-8	4107+11.7720	-33.9162	5308.3535	308.5636	-33.9162	211.7720	454526.9612	679178.3936			215.8320	-0.020000
F-9	4107+20.5710	-33.9162	5308.4328	308.5510	-33.9162	220.5710	454525.9981	679187.1398			224.6310	-0.020000
BK BRG P2	4107+29.3700	-33.9162	5308.5090	308.5090	-33.9162	229.3700	454525.0350	679195.8859	-34.1583	-6 49 34.63	233.4300	-0.020000
CL P2	4107+30.3800	-33.9162	5308.5176		-33.9162	230.3800	454524.9244	679196.8898	-34.1583	-6 49 34.63	234.4400	-0.020000
AH BRG P2	4107+31.3800	-33.9162	5308.5260	308.5260	-33.9162	231.3800	454524.8150	679197.8838	-34.1583	-6 49 34.63	235.4400	-0.020000
F-1	4107+37.8800	-33.9162	5308.5798	308.6149	-33.9162	237.8800	454524.1035	679204.3448			241.9400	-0.020000
F-2	4107+44.3800	-33.9162	5308.6319	308.6943	-33.9162	244.3800	454523.3920	679210.8057			248.4400	-0.020000
F-3	4107+50.8800	-33.9162	5308.6823	308.7642	-33.9162	250.8800	454522.6806	679217.2667			254.9400	-0.020000
F-4	4107+57.3800	-33.9162	5308.7310	308.8246	-33.9162	257.3800	454521.9691	679223.7276			261.4400	-0.020000
F-5	4107+63.8800	-33.9162	5308.7780	308.8754	-33.9162	263.8800	454521.2576	679230.1885			267.9400	-0.020000
F-6	4107+70.3800	-33.9162	5308.8233	308.9168	-33.9162	270.3800	454520.5462	679236.6495			274.4400	-0.020000
F-7	4107+76.8800	-33.9162	5308.8669	308.9488	-33.9162	276.8800	454519.8347	679243.1104			280.9400	-0.020000
F-8	4107+83.3800	-33.9162	5308.9087	308.9712	-33.9162	283.3800	454519.1232	679249.5714			287.4400	-0.020000
F-9	4107+89.8800	-33.9162	5308.9489	308.9840	-33.9162	289.8800	454518.4118	679256.0323			293.9400	-0.020000
CL BRG EB3	4107+96.3800	-33.9162	5308.9874	308.9874	-33.9162	296.3800	454517.7003	679262.4933	-34.1583	-6 49 34.63	300.4400	-0.020000
BF EB3	4107+97.8900	-33.9162	5308.9961		-33.9162	297.8900	454517.5350	679263.9942	-34.1583	-6 49 34.63	301.9500	-0.020000

GIRDER 13 — PARALLEL TO HORIZONTAL CONTROL — 0.250000 FEET BELOW FINISHED GRADE

BENT LINE	STATION	OFFSET	ELEVATION	ELEV+DL	X	Y	NORTHING	EASTING	BENT LNTH	SKEW	GIRDER LNTH	CRS-SLP
*REF LINE	4104+96.6457	-28.0204	5305.5631		-28.0204	-3.3543	454544.6477	678963.9146	-28.2205	-6 49 34.63	0.0000	-0.020000
BF EB1	4106+40.5757	-28.0204	5307.7149		-28.0204	140.5757	454528.8937	679106.9798	-28.2205	-6 49 34.63	143.9300	-0.020000
CL BRG EB1	4106+42.0857	-28.0204	5307.7330	307.7330	-28.0204	142.0857	454528.7284	679108.4807	-28.2205	-6 49 34.63	145.4400	-0.020000
F-1	4106+50.8847	-28.0204	5307.8370	307.9552	-28.0204	150.8847	454527.7653	679117.2268			154.2390	-0.020000
F-2	4106+59.6837	-28.0204	5307.9379	308.1481	-28.0204	159.6837	454526.8022	679125.9730			163.0380	-0.020000
F-3	4106+68.4827	-28.0204	5308.0357	308.3115	-28.0204	168.4827	454525.8391	679134.7191			171.8370	-0.020000
F-4	4106+77.2817	-28.0204	5308.1303	308.4455	-28.0204	177.2817	454524.8760	679143.4652			180.6360	-0.020000
F-5	4106+86.0807	-28.0204	5308.2219	308.5502	-28.0204	186.0807	454523.9129	679152.2114			189.4350	-0.020000
F-6	4106+94.8797	-28.0204	5308.3103	308.6255	-28.0204	194.8797	454522.9498	679160.9575			198.2340	-0.020000
F-7	4107+03.6787	-28.0204	5308.3956	308.6715	-28.0204	203.6787	454521.9867	679169.7036			207.0330	-0.020000
F-8	4107+12.4777	-28.0204	5308.4778	308.6880	-28.0204	212.4777	454521.0236	679178.4498			215.8320	-0.020000
F-9	4107+21.2767	-28.0204	5308.5569	308.6751	-28.0204	221.2767	454520.0605	679187.1959			224.6310	-0.020000
BK BRG P2	4107+30.0757	-28.0204	5308.6329	308.6329	-28.0204	230.0757	454519.0974	679195.9420	-28.2205	-6 49 34.63	233.4300	-0.020000
CL P2	4107+31.0857	-28.0204	5308.6414		-28.0204	231.0857	454518.9868	679196.9460	-28.2205	-6 49 34.63	234.4400	-0.020000
AH BRG P2	4107+32.0857	-28.0204	5308.6498	308.6498	-28.0204	232.0857	454518.8773	679197.9399	-28.2205	-6 49 34.63	235.4400	-0.020000
F-1	4107+38.5857	-28.0204	5308.7034	308.7385	-28.0204	238.5857	454518.1659	679204.4009			241.9400	-0.020000
F-2	4107+45.0857	-28.0204	5308.7554	308.8178	-28.0204	245.0857	454517.4544	679210.8618			248.4400	-0.020000
F-3	4107+51.5857	-28.0204	5308.8056	308.8875	-28.0204	251.5857	454516.7429	679217.3228			254.9400	-0.020000
F-4	4107+58.0857	-28.0204	5308.8541	308.9477	-28.0204	258.0857	454516.0315	679223.7837			261.4400	-0.020000
F-5	4107+64.5857	-28.0204	5308.9009	308.9984	-28.0204	264.5857	454515.3200	679230.2447			267.9400	-0.020000
F-6	4107+71.0857	-28.0204	5308.9460	309.0396	-28.0204	271.0857	454514.6086	679236.7056			274.4400	-0.020000
F-7	4107+77.5857	-28.0204	5308.9894	309.0713	-28.0204	277.5857	454513.8971	679243.1666			280.9400	-0.020000
F-8	4107+84.0857	-28.0204	5309.0311	309.0935	-28.0204	284.0857	454513.1856	679249.6275			287.4400	-0.020000
F-9	4107+90.5857	-28.0204	5309.0711	309.1062	-28.0204	290.5857	454512.4742	679256.0885			293.9400	-0.020000
CL BRG EB3	4107+97.0857	-28.0204	5309.1094	309.1094	-28.0204	297.0857	454511.7627	679262.5494	-28.2205	-6 49 34.63	300.4400	-0.020000
BF EB3	4107+98.5957	-28.0204	5309.1181		-28.0204	298.5957	454511.5974	679264.0503	-28.2205	-6 49 34.63	301.9500	-0.020000

GIRDER 14 — PARALLEL TO HORIZONTAL CONTROL — 0.250000 FEET BELOW FINISHED GRADE

BENT LINE	STATION	OFFSET	ELEVATION	ELEV+DL	X	Y	NORTHING	EASTING	BENT LNTH	SKEW	GIRDER LNTH	CRS-SLP
*REF LINE	4104+97.3515	-22.1246	5305.6936		-22.1246	-2.6485	454538.7101	678963.9708	-22.2826	-6 49 34.63	0.0000	-0.020000
BF EB1	4106+41.2815	-22.1246	5307.8413		-22.1246	141.2815	454522.9560	679107.0360	-22.2826	-6 49 34.63	143.9300	-0.020000
CL BRG EB1	4106+42.7915	-22.1246	5307.8594	307.8594	-22.1246	142.7915	454522.7908	679108.5369	-22.2826	-6 49 34.63	145.4400	-0.020000
F-1	4106+51.5905	-22.1246	5307.9632	308.0813	-22.1246	151.5905	454521.8277	679117.2831			154.2390	-0.020000
F-2	4106+60.3895	-22.1246	5308.0638	308.2740	-22.1246	160.3895	454520.8646	679126.0292			163.0380	-0.020000
F-3	4106+69.1885	-22.1246	5308.1613	308.4371	-22.1246	169.1885	454519.9015	679134.7753			171.8370	-0.020000
F-4	4106+77.9875	-22.1246	5308.2557	308.5709	-22.1246	177.9875	454518.9383	679143.5215			180.6360	-0.020000
F-5	4106+86.7865	-22.1246	5308.3470	308.6753	-22.1246	186.7865	454517.9752	679152.2676			189.4350	-0.020000
F-6	4106+95.5855	-22.1246	5308.4352	308.7504	-22.1246	195.5855	454517.0121	679161.0137			198.2340	-0.020000
F-7	4107+04.3845	-22.1246	5308.5203	308.7961	-22.1246	204.3845	454516.0490	679169.7599			207.0330	-0.020000
F-8	4107+13.1835	-22.1246	5308.6022	308.8124	-22.1246	213.1835	454515.0859	679178.5060			215.8320	-0.020000
F-9	4107+21.9825	-22.1246	5308.6811	308.7992	-22.1246	221.9825	454514.1228	679187.2521			224.6310	-0.020000
BK BRG P2	4107+30.7815	-22.1246	5308.7568	308.7568	-22.1246	230.7815	454513.1597	679195.9983	-22.2826	-6 49 34.63	233.4300	-0.020000
CL P2	4107+31.7915	-22.1246	5308.7653		-22.1246	231.7915	454513.0492	679197.0022	-22.2826	-6 49 34.63	234.4400	-0.020000
AH BRG P2	4107+32.7915	-22.1246	5308.7737	308.7737	-22.1246	232.7915	454512.9397	679197.9962	-22.2826	-6 49 34.63	235.4400	-0.020000
F-1	4107+39.2915	-22.1246	5308.8271	308.8622	-22.1246	239.2915	454512.2282	679204.4571			241.9400	-0.020000
F-2	4107+45.7915	-22.1246	5308.8788	308.9412	-22.1246	245.7915	454511.5168	679210.9181			248.4400	-0.020000
F-3	4107+52.2915	-22.1246	5308.9288	309.0107	-22.1246	252.2915	454510.8053	679217.3790			254.9400	-0.020000
F-4	4107+58.7915	-22.1246	5308.9771	309.0707	-22.1246	258.7915	454510.0939	679223.8400			261.4400	-0.020000
F-5	4107+65.2915	-22.1246	5309.0238	309.1213	-22.1246	265.2915	454509.3824	679230.3009			267.9400	-0.020000
F-6	4107+71.7915	-22.1246	5309.0687	309.1623	-22.1246	271.7915	454508.6709	679236.7618			274.4400	-0.020000
F-7	4107+78.2915	-22.1246	5309.1119	309.1938	-22.1246	278.2915	454507.9595	679243.2228			280.9400	-0.020000
F-8	4107+84.7915	-22.1246	5309.1535	309.2159	-22.1246	284.7915	454507.2480	679249.6837			287.4400	-0.020000
F-9	4107+91.2915	-22.1246	5309.1933	309.2284	-22.1246	291.2915	454506.5365	679256.1447			293.9400	-0.020000
CL BRG EB3	4107+97.7915	-22.1246	5309.2314	309.2314	-22.1246	297.7915	454505.8251	679262.6056	-22.2826	-6 49 34.63	300.4400	-0.020000
BF EB3	4107+99.3015	-22.1246	5309.2400		-22.1246	299.3015	454505.6598	679264.1066	-22.2826	-6 49 34.63	301.9500	-0.020000

NOTES:
1. ELEVATIONS ARE AT TOP OF CONCRETE DECK 0.2500 FEET BELOW FINISHED GRADE.
2. POSITIVE ROADWAY CROSS SLOPE IS UPWARDS FROM THE PROFILE GRADE LINE.
3. THESE STATIONS, COORDINATES, OFFSETS AND LENGTHS DEFINE THE LAYOUT OF THE STRUCTURE IN A TWO DIMENSIONAL HORIZONTAL PLANE. ELEVATIONS DEFINE THE FINAL GRADE OF THE FINISHED CONCRETE DECK. FABRICATION OF STRUCTURAL COMPONENTS THROUGH THE DIRECT USE OF THIS INFORMATION IS NOT INTENDED OR ADVISABLE.

Design	INITIAL	DATE	Detail	INITIAL	DATE	Quantities	INITIAL	DATE
Designed By	CCH	05/15	Detailed By	MJW	05/15	Quantities By	JWG	05/15
Checked By	MAG	05/15	Checked By	CCH	05/15	Checked By	CCH	05/15

P:\1303354DB - I-70 over Havana DB\19339\Bridge\Drawings\19339BRDG_B139-45-DeckElev.dgn
DGN MODEL:Border3
6/29/2015 6:00:12 PM
isaiah.quintana

Print Date: 6/29/2015
File Name: 19339BRDG_B139-45-DeckElev.dgn
Horiz. Scale: None Vert. Scale: None
Staff Bridge Branch - Unit 0224 AJP

TSIOUVARAS SIMMONS HOLDERNESS

Sheet Revisions		
Date:	Comments	Init.

Colorado Department of Transportation
4670 N. Holly
Denver, CO 80216
Phone: 303-398-6767 FAX: 303-398-6781
Region 1 KK

As Constructed
No Revisions:
Revised:
Void:

I-70 OVER HAVANA STREET DESIGN-BUILD
I-70 BRIDGE OVER HAVANA
BRIDGE DECK ELEVATIONS (3 OF 7)

Designer: J. Garrison
Detailer: M. Welch
Structure Numbers: E-17-VD
Sheet Subset: Bridge 2
Subset Sheets: B41 of 45

Project No./Code
FBR 0704-230
19339
Sheet Number 79

RFC02 JUNE, 2015 (REVIEW)

GIRDER 15 — PARALLEL TO HORIZONTAL CONTROL — 0.250000 FEET BELOW FINISHED GRADE

BENT LINE	STATION	OFFSET	ELEVATION	ELEV+DL	X	Y	NORTHING	EASTING	BENT LNTH	SKEW	GIRDER LNTH	CRS-SLP
*REF LINE	4104+98.0573	-16.2288	5305.8241		-16.2288	-1.9427	454532.7724	678964.0270	-16.3447	-6 49 34.63	0.0000	-0.020000
BF EB1	4106+41.9873	-16.2288	5307.9677		-16.2288	141.9873	454517.0184	679107.0922	-16.3447	-6 49 34.63	143.9300	-0.020000
CL BRG EB1	4106+43.4973	-16.2288	5307.9858	307.9858	-16.2288	143.4973	454516.8531	679108.5932	-16.3447	-6 49 34.63	145.4400	-0.020000
F-1	4106+52.2963	-16.2288	5308.0893	308.2074	-16.2288	152.2963	454515.8900	679117.3393			154.2390	-0.020000
F-2	4106+61.0953	-16.2288	5308.1896	308.3998	-16.2288	161.0953	454514.9269	679126.0854			163.0380	-0.020000
F-3	4106+69.8943	-16.2288	5308.2869	308.5627	-16.2288	169.8943	454513.9638	679134.8316			171.8370	-0.020000
F-4	4106+78.6933	-16.2288	5308.3811	308.6963	-16.2288	178.6933	454513.0007	679143.5777			180.6360	-0.020000
F-5	4106+87.4923	-16.2288	5308.4721	308.8004	-16.2288	187.4923	454512.0376	679152.3238			189.4350	-0.020000
F-6	4106+96.2913	-16.2288	5308.5601	308.8752	-16.2288	196.2913	454511.0745	679161.0700			198.2340	-0.020000
F-7	4107+05.0903	-16.2288	5308.6449	308.9207	-16.2288	205.0903	454510.1114	679169.8161			207.0330	-0.020000
F-8	4107+13.8893	-16.2288	5308.7266	308.9367	-16.2288	213.8893	454509.1483	679178.5622			215.8320	-0.020000
F-9	4107+22.6883	-16.2288	5308.8052	308.9233	-16.2288	222.6883	454508.1852	679187.3083			224.6310	-0.020000
BK BRG P2	4107+31.4873	-16.2288	5308.8807	308.8807	-16.2288	231.4873	454507.2221	679196.0545	-16.3447	-6 49 34.63	233.4300	-0.020000
CL P2	4107+32.4973	-16.2288	5308.8891		-16.2288	232.4973	454507.1115	679197.0584	-16.3447	-6 49 34.63	234.4400	-0.020000
AH BRG P2	4107+33.4973	-16.2288	5308.8975	308.8975	-16.2288	233.4973	454507.0021	679198.0524	-16.3447	-6 49 34.63	235.4400	-0.020000
F-1	4107+39.9973	-16.2288	5308.9507	308.9858	-16.2288	239.9973	454506.2906	679204.5133			241.9400	-0.020000
F-2	4107+46.4973	-16.2288	5309.0022	309.0646	-16.2288	246.4973	454505.5792	679210.9743			248.4400	-0.020000
F-3	4107+52.9973	-16.2288	5309.0521	309.1340	-16.2288	252.9973	454504.8677	679217.4352			254.9400	-0.020000
F-4	4107+59.4973	-16.2288	5309.1002	309.1938	-16.2288	259.4973	454504.1562	679223.8962			261.4400	-0.020000
F-5	4107+65.9973	-16.2288	5309.1466	309.2441	-16.2288	265.9973	454503.4448	679230.3571			267.9400	-0.020000
F-6	4107+72.4973	-16.2288	5309.1914	309.2850	-16.2288	272.4973	454502.7333	679236.8181			274.4400	-0.020000
F-7	4107+78.9973	-16.2288	5309.2344	309.3163	-16.2288	278.9973	454502.0218	679243.2790			280.9400	-0.020000
F-8	4107+85.4973	-16.2288	5309.2758	309.3382	-16.2288	285.4973	454501.3104	679249.7400			287.4400	-0.020000
F-9	4107+91.9973	-16.2288	5309.3154	309.3505	-16.2288	291.9973	454500.5989	679256.2009			293.9400	-0.020000
CL BRG EB3	4107+98.4973	-16.2288	5309.3534	309.3534	-16.2288	298.4973	454499.8874	679262.6619	-16.3447	-6 49 34.63	300.4400	-0.020000
BF EB3	4108+00.0073	-16.2288	5309.3619		-16.2288	300.0073	454499.7222	679264.1628	-16.3447	-6 49 34.63	301.9500	-0.020000

GIRDER 16 — PARALLEL TO HORIZONTAL CONTROL — 0.250000 FEET BELOW FINISHED GRADE

BENT LINE	STATION	OFFSET	ELEVATION	ELEV+DL	X	Y	NORTHING	EASTING	BENT LNTH	SKEW	GIRDER LNTH	CRS-SLP
*REF LINE	4104+98.7631	-10.3330	5305.9546		-10.3330	-1.2369	454526.8348	678964.0832	-10.4068	-6 49 34.63	0.0000	-0.020000
BF EB1	4106+42.6931	-10.3330	5308.0941		-10.3330	142.6931	454511.0808	679107.1485	-10.4068	-6 49 34.63	143.9300	-0.020000
CL BRG EB1	4106+44.2031	-10.3330	5308.1121	308.1121	-10.3330	144.2031	454510.9155	679108.6494	-10.4068	-6 49 34.63	145.4400	-0.020000
F-1	4106+53.0021	-10.3330	5308.2153	308.3335	-10.3330	153.0021	454509.9524	679117.3955			154.2390	-0.020000
F-2	4106+61.8011	-10.3330	5308.3155	308.5256	-10.3330	161.8011	454508.9893	679126.1416			163.0380	-0.020000
F-3	4106+70.6001	-10.3330	5308.4125	308.6883	-10.3330	170.6001	454508.0262	679134.8878			171.8370	-0.020000
F-4	4106+79.3991	-10.3330	5308.5064	308.8216	-10.3330	179.3991	454507.0631	679143.6339			180.6360	-0.020000
F-5	4106+88.1981	-10.3330	5308.5972	308.9255	-10.3330	188.1981	454506.1000	679152.3800			189.4350	-0.020000
F-6	4106+96.9971	-10.3330	5308.6849	309.0001	-10.3330	196.9971	454505.1369	679161.1262			198.2340	-0.020000
F-7	4107+05.7961	-10.3330	5308.7695	309.0453	-10.3330	205.7961	454504.1738	679169.8723			207.0330	-0.020000
F-8	4107+14.5951	-10.3330	5308.8509	309.0611	-10.3330	214.5951	454503.2107	679178.6184			215.8320	-0.020000
F-9	4107+23.3941	-10.3330	5308.9293	309.0474	-10.3330	223.3941	454502.2476	679187.3646			224.6310	-0.020000
BK BRG P2	4107+32.1931	-10.3330	5309.0045	309.0045	-10.3330	232.1931	454501.2845	679196.1107	-10.4068	-6 49 34.63	233.4300	-0.020000
CL P2	4107+33.2031	-10.3330	5309.0129		-10.3330	233.2031	454501.1739	679197.1146	-10.4068	-6 49 34.63	234.4400	-0.020000
AH BRG P2	4107+34.2031	-10.3330	5309.0212	309.0212	-10.3330	234.2031	454501.0645	679198.1086	-10.4068	-6 49 34.63	235.4400	-0.020000
F-1	4107+40.7031	-10.3330	5309.0743	309.1094	-10.3330	240.7031	454500.3530	679204.5696			241.9400	-0.020000
F-2	4107+47.2031	-10.3330	5309.1256	309.1881	-10.3330	247.2031	454499.6415	679211.0305			248.4400	-0.020000
F-3	4107+53.7031	-10.3330	5309.1753	309.2572	-10.3330	253.7031	454498.9301	679217.4915			254.9400	-0.020000
F-4	4107+60.2031	-10.3330	5309.2232	309.3168	-10.3330	260.2031	454498.2186	679223.9524			261.4400	-0.020000
F-5	4107+66.7031	-10.3330	5309.2695	309.3670	-10.3330	266.7031	454497.5071	679230.4134			267.9400	-0.020000
F-6	4107+73.2031	-10.3330	5309.3141	309.4077	-10.3330	273.2031	454496.7957	679236.8743			274.4400	-0.020000
F-7	4107+79.7031	-10.3330	5309.3569	309.4388	-10.3330	279.7031	454496.0842	679243.3353			280.9400	-0.020000
F-8	4107+86.2031	-10.3330	5309.3981	309.4605	-10.3330	286.2031	454495.3727	679249.7962			287.4400	-0.020000
F-9	4107+92.7031	-10.3330	5309.4375	309.4726	-10.3330	292.7031	454494.6613	679256.2571			293.9400	-0.020000
CL BRG EB3	4107+99.2031	-10.3330	5309.4753	309.4753	-10.3330	299.2031	454493.9498	679262.7181	-10.4068	-6 49 34.63	300.4400	-0.020000
BF EB3	4108+00.7131	-10.3330	5309.4838		-10.3330	300.7131	454493.7845	679264.2190	-10.4068	-6 49 34.63	301.9500	-0.020000

GIRDER 17 — PARALLEL TO HORIZONTAL CONTROL — 0.250000 FEET BELOW FINISHED GRADE

BENT LINE	STATION	OFFSET	ELEVATION	ELEV+DL	X	Y	NORTHING	EASTING	BENT LNTH	SKEW	GIRDER LNTH	CRS-SLP
*REF LINE	4104+99.4688	-4.4372	5306.0850		-4.4372	-0.5312	454520.8972	678964.1394	-4.4689	-6 49 34.63	0.0000	-0.020000
BF EB1	4106+43.3988	-4.4372	5308.2204		-4.4372	143.3988	454505.1432	679107.2046	-4.4689	-6 49 34.63	143.9300	-0.020000
CL BRG EB1	4106+44.9088	-4.4372	5308.2384	308.2384	-4.4372	144.9088	454504.9779	679108.7055	-4.4689	-6 49 34.63	145.4400	-0.020000
F-1	4106+53.7078	-4.4372	5308.3414	308.4596	-4.4372	153.7078	454504.0148	679117.4516			154.2390	-0.020000
F-2	4106+62.5068	-4.4372	5308.4413	308.6515	-4.4372	162.5068	454503.0517	679126.1978			163.0380	-0.020000
F-3	4106+71.3058	-4.4372	5308.5381	308.8139	-4.4372	171.3058	454502.0886	679134.9439			171.8370	-0.020000
F-4	4106+80.1048	-4.4372	5308.6317	308.9469	-4.4372	180.1048	454501.1255	679143.6900			180.6360	-0.020000
F-5	4106+88.9038	-4.4372	5308.7223	309.0506	-4.4372	188.9038	454500.1624	679152.4362			189.4350	-0.020000
F-6	4106+97.7028	-4.4372	5308.8097	309.1249	-4.4372	197.7028	454499.1993	679161.1823			198.2340	-0.020000
F-7	4107+06.5018	-4.4372	5308.8940	309.1699	-4.4372	206.5018	454498.2362	679169.9284			207.0330	-0.020000
F-8	4107+15.3008	-4.4372	5308.9752	309.1854	-4.4372	215.3008	454497.2731	679178.6746			215.8320	-0.020000
F-9	4107+24.0998	-4.4372	5309.0533	309.1715	-4.4372	224.0998	454496.3099	679187.4207			224.6310	-0.020000
BK BRG P2	4107+32.8988	-4.4372	5309.1283	309.1283	-4.4372	232.8988	454495.3468	679196.1668	-4.4689	-6 49 34.63	233.4300	-0.020000
CL P2	4107+33.9088	-4.4372	5309.1367		-4.4372	233.9088	454495.2363	679197.1708	-4.4689	-6 49 34.63	234.4400	-0.020000
AH BRG P2	4107+34.9088	-4.4372	5309.1450	309.1450	-4.4372	234.9088	454495.1268	679198.1648	-4.4689	-6 49 34.63	235.4400	-0.020000
F-1	4107+41.4088	-4.4372	5309.1979	309.2329	-4.4372	241.4088	454494.4154	679204.6257			241.9400	-0.020000
F-2	4107+47.9088	-4.4372	5309.2490	309.3114	-4.4372	247.9088	454493.7039	679211.0867			248.4400	-0.020000
F-3	4107+54.4088	-4.4372	5309.2985	309.3804	-4.4372	254.4088	454492.9924	679217.5476			254.9400	-0.020000
F-4	4107+60.9088	-4.4372	5309.3463	309.4399	-4.4372	260.9088	454492.2810	679224.0085			261.4400	-0.020000
F-5	4107+67.4088	-4.4372	5309.3923	309.4898	-4.4372	267.4088	454491.5695	679230.4695			267.9400	-0.020000
F-6	4107+73.9088	-4.4372	5309.4367	309.5303	-4.4372	273.9088	454490.8580	679236.9304			274.4400	-0.020000
F-7	4107+80.4088	-4.4372	5309.4794	309.5613	-4.4372	280.4088	454490.1466	679243.3914			280.9400	-0.020000
F-8	4107+86.9088	-4.4372	5309.5204	309.5828	-4.4372	286.9088	454489.4351	679249.8523			287.4400	-0.020000
F-9	4107+93.4088	-4.4372	5309.5596	309.5947	-4.4372	293.4088	454488.7237	679256.3133			293.9400	-0.020000
CL BRG EB3	4107+99.9088	-4.4372	5309.5972	309.5972	-4.4372	299.9088	454488.0122	679262.7742	-4.4689	-6 49 34.63	300.4400	-0.020000
BF EB3	4108+01.4188	-4.4372	5309.6057		-4.4372	301.4188	454487.8469	679264.2751	-4.4689	-6 49 34.63	301.9500	-0.020000

HCL — PARALLEL TO HORIZONTAL CONTROL — 0.250000 FEET BELOW FINISHED GRADE

BENT LINE	STATION	OFFSET	ELEVATION	ELEV+DL	X	Y	NORTHING	EASTING	BENT LNTH	SKEW	GIRDER LNTH	CRS-SLP
*REF LINE	4105+00.0000	0.0000	5306.1832		0.0000	0.0000	454516.4285	678964.1817	0.0000	-6 49 34.63	0.0000	
BF EB1	4106+43.9300	0.0000	5308.3155		0.0000	143.9300	454500.6745	679107.2469	0.0000	-6 49 34.63	143.9300	
CL BRG EB1	4106+45.4400	0.0000	5308.3335	308.3335	0.0000	145.4400	454500.5092	679108.7478	0.0000	-6 49 34.63	145.4400	
F-1	4106+54.2390	0.0000	5308.4363	308.5544	0.0000	154.2390	454499.5461	679117.4940			154.2390	
F-2	4106+63.0380	0.0000	5308.5360	308.7461	0.0000	163.0380	454498.5830	679126.2401			163.0380	
F-3	4106+71.8370	0.0000	5308.6325	308.9084	0.0000	171.8370	454497.6199	679134.9862			171.8370	
F-4	4106+80.6360	0.0000	5308.7260	309.0412	0.0000	180.6360	454496.6568	679143.7324			180.6360	
F-5	4106+89.4350	0.0000	5308.8164	309.1447	0.0000	189.4350	454495.6937	679152.4785			189.4350	
F-6	4106+98.2340	0.0000	5308.9036	309.2188	0.0000	198.2340	454494.7306	679161.2246			198.2340	
F-7	4107+07.0330	0.0000	5308.9878	309.2636	0.0000	207.0330	454493.7675	679169.9708			207.0330	
F-8	4107+15.8320	0.0000	5309.0688	309.2789	0.0000	215.8320	454492.8044	679178.7169			215.8320	
F-9	4107+24.6310	0.0000	5309.1467	309.2648	0.0000	224.6310	454491.8413	679187.4630			224.6310	
BK BRG P2	4107+33.4300	0.0000	5309.2215	309.2215	0.0000	233.4300	454490.8782	679196.2092	0.0000	-6 49 34.63	233.4300	
CL P2	4107+34.4400	0.0000	5309.2299		0.0000	234.4400	454490.7676	679197.2131	0.0000	-6 49 34.63	234.4400	
AH BRG P2	4107+35.4400	0.0000	5309.2381	309.2381	0.0000	235.4400	454490.6582	679198.2071	0.0000	-6 49 34.63	235.4400	
F-1	4107+41.9400	0.0000	5309.2909	309.3259	0.0000	241.9400	454489.9467	679204.6680			241.9400	
F-2	4107+48.4400	0.0000	5309.3419	309.4043	0.0000	248.4400	454489.2352	679211.1290			248.4400	
F-3	4107+54.9400	0.0000	5309.3912	309.4731	0.0000	254.9400	454488.5238	679217.5899			254.9400	
F-4	4107+61.4400	0.0000	5309.4388	309.5324	0.0000	261.4400	454487.8123	679224.0509			261.4400	
F-5	4107+67.9400	0.0000	5309.4848	309.5823	0.0000	267.9400	454487.1008	679230.5118			267.9400	
F-6	4107+74.4400	0.0000	5309.5290	309.6226	0.0000	274.4400	454486.3894	679236.9728			274.4400	
F-7	4107+80.9400	0.0000	5309.5715	309.6535	0.0000	280.9400	454485.6779	679243.4337			280.9400	
F-8	4107+87.4400	0.0000	5309.6124	309.6748	0.0000	287.4400	454484.9664	679249.8947			287.4400	
F-9	4107+93.9400	0.0000	5309.6515	309.6866	0.0000	293.9400	454484.2550	679256.3556			293.9400	
CL BRG EB3	4108+00.4400	0.0000	5309.6890	309.6890	0.0000	300.4400	454483.5435	679262.8165	0.0000	-6 49 34.63	300.4400	
BF EB3	4108+01.9500	0.0000	5309.6974		0.0000	301.9500	454483.3782	679264.3175	0.0000	-6 49 34.63	301.9500	

GIRDER 18 — PARALLEL TO HORIZONTAL CONTROL — 0.250000 FEET BELOW FINISHED GRADE

BENT LINE	STATION	OFFSET	ELEVATION	ELEV+DL	X	Y	NORTHING	EASTING	BENT LNTH	SKEW	GIRDER LNTH	CRS-SLP
*REF LINE	4105+00.1871	1.5628	5306.1552		1.5628	0.1871	454514.8546	678964.1966	1.5740	-6 49 34.63	0.0000	-0.020000
BF EB1	4106+44.1171	1.5628	5308.2865		1.5628	144.1171	454499.1006	679107.2618	1.5740	-6 49 34.63	143.9300	-0.020000
CL BRG EB1	4106+45.6271	1.5628	5308.3044	308.3044	1.5628	145.6271	454498.9353	679108.7628	1.5740	-6 49 34.63	145.4400	-0.020000
F-1	4106+54.4261	1.5628	5308.4072	308.5253	1.5628	154.4261	454497.9722	679117.5089			154.2390	-0.020000
F-2	4106+63.2251	1.5628	5308.5068	308.7170	1.5628	163.2251	454497.0091	679126.2550			163.0380	-0.020000
F-3	4106+72.0241	1.5628	5308.6033	308.8791	1.5628	172.0241	454496.0460	679135.0012			171.8370	-0.020000
F-4	4106+80.8231	1.5628	5308.6967	309.0119	1.5628	180.8231	454495.0829	679143.7473			180.6360	-0.020000
F-5	4106+89.6221	1.5628	5308.7870	309.1153	1.5628	189.6221	454494.1198	679152.4934			189.4350	-0.020000
F-6	4106+98.4211	1.5628	5308.8742	309.1894	1.5628	198.4211	454493.1567	679161.2396			198.2340	-0.020000
F-7	4107+07.2201	1.5628	5308.9583	309.2341	1.5628	207.2201	454492.1936	679169.9857			207.0330	-0.020000
F-8	4107+16.0191	1.5628	5309.0392	309.2494	1.5628	216.0191	454491.2305	679178.7318			215.8320	-0.020000
F-9	4107+24.8181	1.5628	5309.1170	309.2352	1.5628	224.8181	454490.2674	679187.4780			224.6310	-0.020000
BK BRG P2	4107+33.6171	1.5628	5309.1918	309.1918	1.5628	233.6171	454489.3043	679196.2241	1.5740	-6 49 34.63	233.4300	-0.020000
CL P2	4107+34.6271	1.5628	5309.2002		1.5628	234.6271	454489.1937	679197.2280	1.5740	-6 49 34.63	234.4400	-0.020000
AH BRG P2	4107+35.6271	1.5628	5309.2084	309.2084	1.5628	235.6271	454489.0843	679198.2220	1.5740	-6 49 34.63	235.4400	-0.020000
F-1	4107+42.1271	1.5628	5309.2611	309.2962	1.5628	242.1271	454488.3728	679204.6830			241.9400	-0.020000
F-2	4107+48.6271	1.5628	5309.3121	309.3745	1.5628	248.6271	454487.6613	679211.1439			248.4400	-0.020000
F-3	4107+55.1271	1.5628	5309.3613	309.4433	1.5628	255.1271	454486.9499	679217.6048			254.9400	-0.020000
F-4	4107+61.6271	1.5628	5309.4089	309.5025	1.5628	261.6271	454486.2384	679224.0658			261.4400	-0.020000
F-5	4107+68.1271	1.5628	5309.4548	309.5523	1.5628	268.1271	454485.5269	679230.5267			267.9400	-0.020000
F-6	4107+74.6271	1.5628	5309.4990	309.5926	1.5628	274.6271	454484.8155	679236.9877			274.4400	-0.020000
F-7	4107+81.1271	1.5628	5309.5415	309.6234	1.5628	281.1271	454484.1040	679243.4486			280.9400	-0.020000
F-8	4107+87.6271	1.5628	5309.5823	309.6447	1.5628	287.6271	454483.3925	679249.9096			287.4400	-0.020000
F-9	4107+94.1271	1.5628	5309.6214	309.6564	1.5628	294.1271	454482.6811	679256.3705			293.9400	-0.020000
CL BRG EB3	4108+00.6271	1.5628	5309.6588	309.6588	1.5628	300.6271	454481.9696	679262.8315	1.5740	-6 49 34.63	300.4400	-0.020000
BF EB3	4108+02.1371	1.5628	5309.6672		1.5628	302.1371	454481.8043	679264.3324	1.5740	-6 49 34.63	301.9500	-0.020000

GIRDER 19 — PARALLEL TO HORIZONTAL CONTROL — 0.250000 FEET BELOW FINISHED GRADE

BENT LINE	STATION	OFFSET	ELEVATION	ELEV+DL	X	Y	NORTHING	EASTING	BENT LNTH	SKEW	GIRDER LNTH	CRS-SLP
*REF LINE	4105+00.9128	7.6256	5306.0468		7.6256	0.9128	454508.7488	678964.2543	7.6800	-6 49 34.63	0.0000	-0.020000
BF EB1	4106+44.8428	7.6256	5308.1739		7.6256	144.8428	454492.9948	679107.3196	7.6800	-6 49 34.63	143.9300	-0.020000
CL BRG EB1	4106+46.3528	7.6256	5308.1918	308.1918	7.6256	146.3528	454492.8295	679108.8205	7.6800	-6 49 34.63	145.4400	-0.020000
F-1	4106+55.1518	7.6256	5308.2942	308.4124	7.6256	155.1518	454491.8664	679117.5666			154.2390	-0.020000
F-2	4106+63.9508	7.6256	5308.3936	308.6038	7.6256	163.9508	454490.9033	679126.3128			163.0380	-0.020000
F-3	4106+72.7498	7.6256	5308.4899	308.7657	7.6256	172.7498	454489.9402	679135.0589			171.8370	-0.020000
F-4	4106+81.5488	7.6256	5308.5830	308.8982	7.6256	181.5488	454488.9771	679143.8050			180.6360	-0.020000
F-5	4106+90.3478	7.6256	5308.6731	309.0014	7.6256	190.3478	454488.0140	679152.5512			189.4350	-0.020000
F-6	4106+99.1468	7.6256	5308.7600	309.0752	7.6256	199.1468	454487.0509	679161.2973			198.2340	-0.020000
F-7	4107+07.9458	7.6256	5308.8438	309.1196	7.6256	207.9458	454486.0878	679170.0434			207.0330	-0.020000
F-8	4107+16.7448	7.6256	5308.9245	309.1347	7.6256	216.7448	454485.1247	679178.7895			215.8320	-0.020000
F-9	4107+25.5438	7.6256	5309.0021	309.1202	7.6256	225.5438	454484.1616	679187.5357			224.6310	-0.020000
BK BRG P2	4107+34.3428	7.6256	5309.0765	309.0765	7.6256	234.3428	454483.1985	679196.2818	7.6800	-6 49 34.63	233.4300	-0.020000
CL P2	4107+35.3528	7.6256	5309.0849		7.6256	235.3528	454483.0879	679197.2857	7.6800	-6 49 34.63	234.4400	-0.020000
AH BRG P2	4107+36.3528	7.6256	5309.0931	309.0931	7.6256	236.3528	454482.9785	679198.2797	7.6800	-6 49 34.63	235.4400	-0.020000
F-1	4107+42.8528	7.6256	5309.1456	309.1807	7.6256	242.8528	454482.2670	679204.7407			241.9400	-0.020000
F-2	4107+49.3528	7.6256	5309.1964	309.2588	7.6256	249.3528	454481.5555	679211.2016			248.4400	-0.020000
F-3	4107+55.8528	7.6256	5309.2455	309.3274	7.6256	255.8528	454480.8441	679217.6626			254.9400	-0.020000
F-4	4107+62.3528	7.6256	5309.2929	309.3865	7.6256	262.3528	454480.1326	679224.1235			261.4400	-0.020000
F-5	4107+68.8528	7.6256	5309.3386	309.4361	7.6256	268.8528	454479.4211	679230.5845			267.9400	-0.020000
F-6	4107+75.3528	7.6256	5309.3826	309.4762	7.6256	275.3528	454478.7097	679237.0454			274.4400	-0.020000
F-7	4107+81.8528	7.6256	5309.4249	309.5068	7.6256	281.8528	454477.9982	679243.5064			280.9400	-0.020000
F-8	4107+88.3528	7.6256	5309.4655	309.5279	7.6256	288.3528	454477.2867	679249.9673			287.4400	-0.020000
F-9	4107+94.8528	7.6256	5309.5044	309.5395	7.6256	294.8528	454476.5753	679256.4282			293.9400	-0.020000
CL BRG EB3	4108+01.3528	7.6256	5309.5416	309.5416	7.6256	301.3528	454475.8638	679262.8892	7.6800	-6 49 34.63	300.4400	-0.020000
BF EB3	4108+02.8628	7.6256	5309.5500		7.6256	302.8628	454475.6985	679264.3901	7.6800	-6 49 34.63	301.9500	-0.020000

NOTES:
1. ELEVATIONS ARE AT TOP OF CONCRETE DECK 0.2500 FEET BELOW FINISHED GRADE.
2. POSITIVE ROADWAY CROSS SLOPE IS UPWARDS FROM THE PROFILE GRADE LINE.
3. THESE STATIONS, COORDINATES, OFFSETS AND LENGTHS DEFINE THE LAYOUT OF THE STRUCTURE IN A TWO DIMENSIONAL HORIZONTAL PLANE. ELEVATIONS DEFINE THE FINAL GRADE OF THE FINISHED CONCRETE DECK. FABRICATION OF STRUCTURAL COMPONENTS THROUGH THE DIRECT USE OF THIS INFORMATION IS NOT INTENDED OR ADVISABLE.

Design	INITIAL	DATE	Detail	INITIAL	DATE	Quantities	INITIAL	DATE
Designed By	CCH	05/15	Detailed By	MJW	05/15	Quantities By	JWG	05/15
Checked By	MAG	05/15	Checked By	CCH	05/15	Checked By	CCH	05/15

P:\1303354DB - I-70 over Havana DB\19339\Bridge\Drawings\19339BRDG_B139-45-DeckElev.dgn
6/29/2015 6:00:13 PM
DGN MODEL:Border4
isaiah.quintana

Print Date: 6/29/2015
File Name: 19339BRDG_B139-45-DeckElev.dgn
Horiz. Scale: None Vert. Scale: None
Staff Bridge Branch - Unit 0224 AJP

TSIOUVARAS SIMMONS HOLDERNESS

Sheet Revisions		
Date:	Comments	Init.

Colorado Department of Transportation
4670 N. Holly
Denver, CO 80216
Phone: 303-398-6767 FAX: 303-398-6781
Region 1 KK

As Constructed
No Revisions:
Revised:
Void:

I-70 OVER HAVANA STREET DESIGN-BUILD
I-70 BRIDGE OVER HAVANA
BRIDGE DECK ELEVATIONS (4 OF 7)

Designer: J. Garrison
Detailer: M. Welch
Structure Numbers: E-17-VD
Sheet Subset: Bridge 2
Subset Sheets: B42 of 45

Project No./Code
FBR 0704-230
19339
Sheet Number 80

RFC02 JUNE, 2015 (REVIEW)

GIRDER 20 — PARALLEL TO HORIZONTAL CONTROL — 0.250000 FEET BELOW FINISHED GRADE

BENT LINE	STATION	OFFSET	ELEVATION	ELEV+DL	X	Y	NORTHING	EASTING	BENT LNTH	SKEW	GIRDER LNTH	CRS-SLP
*REF LINE	4105+01.6386	13.6884	5305.9384		13.6884	1.6386	454502.6430	678964.3122	13.7861	-6 49 34.63	0.0000	-0.020000
BF EB1	4106+45.5686	13.6884	5308.0612		13.6884	145.5686	454486.8890	679107.3774	13.7861	-6 49 34.63	143.9300	-0.020000
CL BRG EB1	4106+47.0786	13.6884	5308.0791	308.0791	13.6884	147.0786	454486.7237	679108.8783	13.7861	-6 49 34.63	145.4400	-0.020000
F-1	4106+55.8776	13.6884	5308.1813	308.2995	13.6884	155.8776	454485.7606	679117.6245			154.2390	-0.020000
F-2	4106+64.6766	13.6884	5308.2804	308.4906	13.6884	164.6766	454484.7975	679126.3706			163.0380	-0.020000
F-3	4106+73.4756	13.6884	5308.3764	308.6523	13.6884	173.4756	454483.8344	679135.1167			171.8370	-0.020000
F-4	4106+82.2746	13.6884	5308.4693	308.7845	13.6884	182.2746	454482.8713	679143.8628			180.6360	-0.020000
F-5	4106+91.0736	13.6884	5308.5591	308.8874	13.6884	191.0736	454481.9082	679152.6090			189.4350	-0.020000
F-6	4106+99.8726	13.6884	5308.6458	308.9609	13.6884	199.8726	454480.9451	679161.3551			198.2340	-0.020000
F-7	4107+08.6716	13.6884	5308.7293	309.0051	13.6884	208.6716	454479.9820	679170.1012			207.0330	-0.020000
F-8	4107+17.4706	13.6884	5308.8098	309.0199	13.6884	217.4706	454479.0189	679178.8474			215.8320	-0.020000
F-9	4107+26.2696	13.6884	5308.8871	309.0052	13.6884	226.2696	454478.0558	679187.5935			224.6310	-0.020000
BK BRG P2	4107+35.0686	13.6884	5308.9613	308.9613	13.6884	235.0686	454477.0926	679196.3396	13.7861	-6 49 34.63	233.4300	-0.020000
CL P2	4107+36.0786	13.6884	5308.9696		13.6884	236.0786	454476.9821	679197.3436	13.7861	-6 49 34.63	234.4400	-0.020000
AH BRG P2	4107+37.0786	13.6884	5308.9778	308.9778	13.6884	237.0786	454476.8726	679198.3376	13.7861	-6 49 34.63	235.4400	-0.020000
F-1	4107+43.5786	13.6884	5309.0301	309.0652	13.6884	243.5786	454476.1612	679204.7985			241.9400	-0.020000
F-2	4107+50.0786	13.6884	5309.0807	309.1431	13.6884	250.0786	454475.4497	679211.2595			248.4400	-0.020000
F-3	4107+56.5786	13.6884	5309.1296	309.2115	13.6884	256.5786	454474.7382	679217.7204			254.9400	-0.020000
F-4	4107+63.0786	13.6884	5309.1768	309.2704	13.6884	263.0786	454474.0268	679224.1813			261.4400	-0.020000
F-5	4107+69.5786	13.6884	5309.2223	309.3198	13.6884	269.5786	454473.3153	679230.6423			267.9400	-0.020000
F-6	4107+76.0786	13.6884	5309.2661	309.3597	13.6884	276.0786	454472.6039	679237.1032			274.4400	-0.020000
F-7	4107+82.5786	13.6884	5309.3082	309.3901	13.6884	282.5786	454471.8924	679243.5642			280.9400	-0.020000
F-8	4107+89.0786	13.6884	5309.3486	309.4111	13.6884	289.0786	454471.1809	679250.0251			287.4400	-0.020000
F-9	4107+95.5786	13.6884	5309.3873	309.4224	13.6884	295.5786	454470.4695	679256.4861			293.9400	-0.020000
CL BRG EB3	4108+02.0786	13.6884	5309.4244	309.4244	13.6884	302.0786	454469.7580	679262.9470	13.7861	-6 49 34.63	300.4400	-0.020000
BF EB3	4108+03.5886	13.6884	5309.4327		13.6884	303.5886	454469.5927	679264.4479	13.7861	-6 49 34.63	301.9500	-0.020000

GIRDER 21 — PARALLEL TO HORIZONTAL CONTROL — 0.250000 FEET BELOW FINISHED GRADE

BENT LINE	STATION	OFFSET	ELEVATION	ELEV+DL	X	Y	NORTHING	EASTING	BENT LNTH	SKEW	GIRDER LNTH	CRS-SLP
*REF LINE	4105+02.3644	19.7511	5305.8299		19.7511	2.3644	454496.5373	678964.3700	19.8921	-6 49 34.63	0.0000	-0.020000
BF EB1	4106+46.2944	19.7511	5307.9486		19.7511	146.2944	454480.7833	679107.4352	19.8921	-6 49 34.63	143.9300	-0.020000
CL BRG EB1	4106+47.8044	19.7511	5307.9664	307.9664	19.7511	147.8044	454480.6180	679108.9362	19.8921	-6 49 34.63	145.4400	-0.020000
F-1	4106+56.6034	19.7511	5308.0683	308.1865	19.7511	156.6034	454479.6549	679117.6823			154.2390	-0.020000
F-2	4106+65.4024	19.7511	5308.1672	308.3774	19.7511	165.4024	454478.6918	679126.4284			163.0380	-0.020000
F-3	4106+74.2014	19.7511	5308.2629	308.5388	19.7511	174.2014	454477.7287	679135.1746			171.8370	-0.020000
F-4	4106+83.0004	19.7511	5308.3556	308.6708	19.7511	183.0004	454476.7656	679143.9207			180.6360	-0.020000
F-5	4106+91.7994	19.7511	5308.4451	308.7734	19.7511	191.7994	454475.8025	679152.6668			189.4350	-0.020000
F-6	4107+00.5984	19.7511	5308.5315	308.8467	19.7511	200.5984	454474.8394	679161.4130			198.2340	-0.020000
F-7	4107+09.3974	19.7511	5308.6148	308.8906	19.7511	209.3974	454473.8762	679170.1591			207.0330	-0.020000
F-8	4107+18.1964	19.7511	5308.6950	308.9052	19.7511	218.1964	454472.9131	679178.9052			215.8320	-0.020000
F-9	4107+26.9954	19.7511	5308.7721	308.8902	19.7511	226.9954	454471.9500	679187.6513			224.6310	-0.020000
BK BRG P2	4107+35.7944	19.7511	5308.8460	308.8460	19.7511	235.7944	454470.9869	679196.3975	19.8921	-6 49 34.63	233.4300	-0.020000
CL P2	4107+36.8044	19.7511	5308.8543		19.7511	236.8044	454470.8764	679197.4014	19.8921	-6 49 34.63	234.4400	-0.020000
AH BRG P2	4107+37.8044	19.7511	5308.8625	308.8625	19.7511	237.8044	454470.7669	679198.3954	19.8921	-6 49 34.63	235.4400	-0.020000
F-1	4107+44.3044	19.7511	5308.9146	308.9497	19.7511	244.3044	454470.0555	679204.8563			241.9400	-0.020000
F-2	4107+50.8044	19.7511	5308.9650	309.0274	19.7511	250.8044	454469.3440	679211.3173			248.4400	-0.020000
F-3	4107+57.3044	19.7511	5309.0137	309.0956	19.7511	257.3044	454468.6325	679217.7782			254.9400	-0.020000
F-4	4107+63.8044	19.7511	5309.0607	309.1543	19.7511	263.8044	454467.9211	679224.2392			261.4400	-0.020000
F-5	4107+70.3044	19.7511	5309.1060	309.2035	19.7511	270.3044	454467.2096	679230.7001			267.9400	-0.020000
F-6	4107+76.8044	19.7511	5309.1497	309.2432	19.7511	276.8044	454466.4981	679237.1611			274.4400	-0.020000
F-7	4107+83.3044	19.7511	5309.1916	309.2735	19.7511	283.3044	454465.7867	679243.6220			280.9400	-0.020000
F-8	4107+89.8044	19.7511	5309.2318	309.2942	19.7511	289.8044	454465.0752	679250.0830			287.4400	-0.020000
F-9	4107+96.3044	19.7511	5309.2703	309.3054	19.7511	296.3044	454464.3637	679256.5439			293.9400	-0.020000
CL BRG EB3	4108+02.8044	19.7511	5309.3071	309.3071	19.7511	302.8044	454463.6523	679263.0049	19.8921	-6 49 34.63	300.4400	-0.020000
BF EB3	4108+04.3144	19.7511	5309.3154		19.7511	304.3144	454463.4870	679264.5058	19.8921	-6 49 34.63	301.9500	-0.020000

GIRDER 22 — PARALLEL TO HORIZONTAL CONTROL — 0.250000 FEET BELOW FINISHED GRADE

BENT LINE	STATION	OFFSET	ELEVATION	ELEV+DL	X	Y	NORTHING	EASTING	BENT LNTH	SKEW	GIRDER LNTH	CRS-SLP
*REF LINE	4105+03.0901	25.8139	5305.7214		25.8139	3.0901	454490.4315	678964.4277	25.9982	-6 49 34.63	0.0000	-0.020000
BF EB1	4106+47.0201	25.8139	5307.8359		25.8139	147.0201	454474.6775	679107.4930	25.9982	-6 49 34.63	143.9300	-0.020000
CL BRG EB1	4106+48.5301	25.8139	5307.8536	307.8536	25.8139	148.5301	454474.5122	679108.9939	25.9982	-6 49 34.63	145.4400	-0.020000
F-1	4106+57.3291	25.8139	5307.9554	308.0735	25.8139	157.3291	454473.5491	679117.7400			154.2390	-0.020000
F-2	4106+66.1281	25.8139	5308.0540	308.2641	25.8139	166.1281	454472.5860	679126.4862			163.0380	-0.020000
F-3	4106+74.9271	25.8139	5308.1495	308.4253	25.8139	174.9271	454471.6229	679135.2323			171.8370	-0.020000
F-4	4106+83.7261	25.8139	5308.2418	308.5570	25.8139	183.7261	454470.6598	679143.9784			180.6360	-0.020000
F-5	4106+92.5251	25.8139	5308.3311	308.6594	25.8139	192.5251	454469.6967	679152.7245			189.4350	-0.020000
F-6	4107+01.3241	25.8139	5308.4172	308.7324	25.8139	201.3241	454468.7335	679161.4707			198.2340	-0.020000
F-7	4107+10.1231	25.8139	5308.5003	308.7761	25.8139	210.1231	454467.7704	679170.2168			207.0330	-0.020000
F-8	4107+18.9221	25.8139	5308.5802	308.7904	25.8139	218.9221	454466.8073	679178.9629			215.8320	-0.020000
F-9	4107+27.7211	25.8139	5308.6570	308.7752	25.8139	227.7211	454465.8442	679187.7091			224.6310	-0.020000
BK BRG P2	4107+36.5201	25.8139	5308.7307	308.7307	25.8139	236.5201	454464.8811	679196.4552	25.9982	-6 49 34.63	233.4300	-0.020000
CL P2	4107+37.5301	25.8139	5308.7390		25.8139	237.5301	454464.7706	679197.4591	25.9982	-6 49 34.63	234.4400	-0.020000
AH BRG P2	4107+38.5301	25.8139	5308.7471	308.7471	25.8139	238.5301	454464.6611	679198.4531	25.9982	-6 49 34.63	235.4400	-0.020000
F-1	4107+45.0301	25.8139	5308.7990	308.8341	25.8139	245.0301	454463.9497	679204.9141			241.9400	-0.020000
F-2	4107+51.5301	25.8139	5308.8493	308.9117	25.8139	251.5301	454463.2382	679211.3750			248.4400	-0.020000
F-3	4107+58.0301	25.8139	5308.8978	308.9797	25.8139	258.0301	454462.5267	679217.8360			254.9400	-0.020000
F-4	4107+64.5301	25.8139	5308.9446	309.0382	25.8139	264.5301	454461.8153	679224.2969			261.4400	-0.020000
F-5	4107+71.0301	25.8139	5308.9897	309.0872	25.8139	271.0301	454461.1038	679230.7579			267.9400	-0.020000
F-6	4107+77.5301	25.8139	5309.0332	309.1268	25.8139	277.5301	454460.3923	679237.2188			274.4400	-0.020000
F-7	4107+84.0301	25.8139	5309.0749	309.1568	25.8139	284.0301	454459.6809	679243.6798			280.9400	-0.020000
F-8	4107+90.5301	25.8139	5309.1149	309.1773	25.8139	290.5301	454458.9694	679250.1407			287.4400	-0.020000
F-9	4107+97.0301	25.8139	5309.1533	309.1883	25.8139	297.0301	454458.2579	679256.6016			293.9400	-0.020000
CL BRG EB3	4108+03.5301	25.8139	5309.1899	309.1899	25.8139	303.5301	454457.5465	679263.0626	25.9982	-6 49 34.63	300.4400	-0.020000
BF EB3	4108+05.0401	25.8139	5309.1981		25.8139	305.0401	454457.3812	679264.5635	25.9982	-6 49 34.63	301.9500	-0.020000

GIRDER 23 — PARALLEL TO HORIZONTAL CONTROL — 0.250000 FEET BELOW FINISHED GRADE

BENT LINE	STATION	OFFSET	ELEVATION	ELEV+DL	X	Y	NORTHING	EASTING	BENT LNTH	SKEW	GIRDER LNTH	CRS-SLP
*REF LINE	4105+03.8159	31.8767	5305.6129		31.8767	3.8159	454484.3257	678964.4856	32.1043	-6 49 34.63	0.0000	-0.020000
BF EB1	4106+47.7459	31.8767	5307.7232		31.8767	147.7459	454468.5716	679107.5508	32.1043	-6 49 34.63	143.9300	-0.020000
CL BRG EB1	4106+49.2559	31.8767	5307.7409	307.7409	31.8767	149.2559	454468.4064	679109.0517	32.1043	-6 49 34.63	145.4400	-0.020000
F-1	4106+58.0549	31.8767	5307.8424	307.9605	31.8767	158.0549	454467.4433	679117.7978			154.2390	-0.020000
F-2	4106+66.8539	31.8767	5307.9407	308.1509	31.8767	166.8539	454466.4801	679126.5440			163.0380	-0.020000
F-3	4106+75.6529	31.8767	5308.0359	308.3118	31.8767	175.6529	454465.5170	679135.2901			171.8370	-0.020000
F-4	4106+84.4519	31.8767	5308.1281	308.4432	31.8767	184.4519	454464.5539	679144.0362			180.6360	-0.020000
F-5	4106+93.2509	31.8767	5308.2171	308.5454	31.8767	193.2509	454463.5908	679152.7824			189.4350	-0.020000
F-6	4107+02.0499	31.8767	5308.3030	308.6181	31.8767	202.0499	454462.6277	679161.5285			198.2340	-0.020000
F-7	4107+10.8489	31.8767	5308.3857	308.6616	31.8767	210.8489	454461.6646	679170.2746			207.0330	-0.020000
F-8	4107+19.6479	31.8767	5308.4654	308.6756	31.8767	219.6479	454460.7015	679179.0208			215.8320	-0.020000
F-9	4107+28.4469	31.8767	5308.5420	308.6601	31.8767	228.4469	454459.7384	679187.7669			224.6310	-0.020000
BK BRG P2	4107+37.2459	31.8767	5308.6154	308.6154	31.8767	237.2459	454458.7753	679196.5130	32.1043	-6 49 34.63	233.4300	-0.020000
CL P2	4107+38.2559	31.8767	5308.6236		31.8767	238.2559	454458.6648	679197.5170	32.1043	-6 49 34.63	234.4400	-0.020000
AH BRG P2	4107+39.2559	31.8767	5308.6317	308.6317	31.8767	239.2559	454458.5553	679198.5110	32.1043	-6 49 34.63	235.4400	-0.020000
F-1	4107+45.7559	31.8767	5308.6835	308.7186	31.8767	245.7559	454457.8438	679204.9719			241.9400	-0.020000
F-2	4107+52.2559	31.8767	5308.7335	308.7959	31.8767	252.2559	454457.1324	679211.4329			248.4400	-0.020000
F-3	4107+58.7559	31.8767	5308.7818	308.8638	31.8767	258.7559	454456.4209	679217.8938			254.9400	-0.020000
F-4	4107+65.2559	31.8767	5308.8285	308.9221	31.8767	265.2559	454455.7094	679224.3547			261.4400	-0.020000
F-5	4107+71.7559	31.8767	5308.8734	308.9709	31.8767	271.7559	454454.9980	679230.8157			267.9400	-0.020000
F-6	4107+78.2559	31.8767	5308.9167	309.0102	31.8767	278.2559	454454.2865	679237.2766			274.4400	-0.020000
F-7	4107+84.7559	31.8767	5308.9582	309.0401	31.8767	284.7559	454453.5751	679243.7376			280.9400	-0.020000
F-8	4107+91.2559	31.8767	5308.9980	309.0604	31.8767	291.2559	454452.8636	679250.1985			287.4400	-0.020000
F-9	4107+97.7559	31.8767	5309.0362	309.0713	31.8767	297.7559	454452.1521	679256.6595			293.9400	-0.020000
CL BRG EB3	4108+04.2559	31.8767	5309.0726	309.0726	31.8767	304.2559	454451.4407	679263.1204	32.1043	-6 49 34.63	300.4400	-0.020000
BF EB3	4108+05.7659	31.8767	5309.0808		31.8767	305.7659	454451.2754	679264.6213	32.1043	-6 49 34.63	301.9500	-0.020000

GIRDER 24 — PARALLEL TO HORIZONTAL CONTROL — 0.250000 FEET BELOW FINISHED GRADE

BENT LINE	STATION	OFFSET	ELEVATION	ELEV+DL	X	Y	NORTHING	EASTING	BENT LNTH	SKEW	GIRDER LNTH	CRS-SLP
*REF LINE	4105+04.5417	37.9395	5305.5044		37.9395	4.5417	454478.2198	678964.5434	38.2104	-6 49 34.63	0.0000	-0.020000
BF EB1	4106+48.4717	37.9395	5307.6104		37.9395	148.4717	454462.4658	679107.6086	38.2104	-6 49 34.63	143.9300	-0.020000
CL BRG EB1	4106+49.9817	37.9395	5307.6281	307.6281	37.9395	149.9817	454462.3005	679109.1095	38.2104	-6 49 34.63	145.4400	-0.020000
F-1	4106+58.7807	37.9395	5307.7293	307.8475	37.9395	158.7807	454461.3374	679117.8557			154.2390	-0.020000
F-2	4106+67.5797	37.9395	5307.8274	308.0376	37.9395	167.5797	454460.3743	679126.6018			163.0380	-0.020000
F-3	4106+76.3787	37.9395	5307.9224	308.1982	37.9395	176.3787	454459.4112	679135.3479			171.8370	-0.020000
F-4	4106+85.1777	37.9395	5308.0143	308.3294	37.9395	185.1777	454458.4481	679144.0941			180.6360	-0.020000
F-5	4106+93.9767	37.9395	5308.1030	308.4313	37.9395	193.9767	454457.4850	679152.8402			189.4350	-0.020000
F-6	4107+02.7757	37.9395	5308.1886	308.5038	37.9395	202.7757	454456.5219	679161.5863			198.2340	-0.020000
F-7	4107+11.5747	37.9395	5308.2712	308.5470	37.9395	211.5747	454455.5588	679170.3325			207.0330	-0.020000
F-8	4107+20.3737	37.9395	5308.3506	308.5607	37.9395	220.3737	454454.5957	679179.0786			215.8320	-0.020000
F-9	4107+29.1727	37.9395	5308.4269	308.5451	37.9395	229.1727	454453.6326	679187.8247			224.6310	-0.020000
BK BRG P2	4107+37.9717	37.9395	5308.5001	308.5001	37.9395	237.9717	454452.6695	679196.5709	38.2104	-6 49 34.63	233.4300	-0.020000
CL P2	4107+38.9817	37.9395	5308.5083		37.9395	238.9817	454452.5589	679197.5748	38.2104	-6 49 34.63	234.4400	-0.020000
AH BRG P2	4107+39.9817	37.9395	5308.5164	308.5164	37.9395	239.9817	454452.4495	679198.5688	38.2104	-6 49 34.63	235.4400	-0.020000
F-1	4107+46.4817	37.9395	5308.5679	308.6030	37.9395	246.4817	454451.7380	679205.0297			241.9400	-0.020000
F-2	4107+52.9817	37.9395	5308.6177	308.6802	37.9395	252.9817	454451.0266	679211.4907			248.4400	-0.020000
F-3	4107+59.4817	37.9395	5308.6659	308.7478	37.9395	259.4817	454450.3151	679217.9516			254.9400	-0.020000
F-4	4107+65.9817	37.9395	5308.7123	308.8059	37.9395	265.9817	454449.6036	679224.4126			261.4400	-0.020000
F-5	4107+72.4817	37.9395	5308.7571	308.8546	37.9395	272.4817	454448.8922	679230.8735			267.9400	-0.020000
F-6	4107+78.9817	37.9395	5308.8001	308.8937	37.9395	278.9817	454448.1807	679237.3345			274.4400	-0.020000
F-7	4107+85.4817	37.9395	5308.8415	308.9234	37.9395	285.4817	454447.4692	679243.7954			280.9400	-0.020000
F-8	4107+91.9817	37.9395	5308.8811	308.9435	37.9395	291.9817	454446.7578	679250.2564			287.4400	-0.020000
F-9	4107+98.4817	37.9395	5308.9191	308.9542	37.9395	298.4817	454446.0463	679256.7173			293.9400	-0.020000
CL BRG EB3	4108+04.9817	37.9395	5308.9553	308.9553	37.9395	304.9817	454445.3348	679263.1782	38.2104	-6 49 34.63	300.4400	-0.020000
BF EB3	4108+06.4917	37.9395	5308.9635		37.9395	306.4917	454445.1696	679264.6792	38.2104	-6 49 34.63	301.9500	-0.020000

GIRDER 25 — PARALLEL TO HORIZONTAL CONTROL — 0.250000 FEET BELOW FINISHED GRADE

BENT LINE	STATION	OFFSET	ELEVATION	ELEV+DL	X	Y	NORTHING	EASTING	BENT LNTH	SKEW	GIRDER LNTH	CRS-SLP
*REF LINE	4105+05.2674	44.0023	5305.3958		44.0023	5.2674	454472.1140	678964.6011	44.3165	-6 49 34.63	0.0000	-0.020000
BF EB1	4106+49.1974	44.0023	5307.4977		44.0023	149.1974	454456.3600	679107.6663	44.3165	-6 49 34.63	143.9300	-0.020000
CL BRG EB1	4106+50.7074	44.0023	5307.5153	307.5153	44.0023	150.7074	454456.1947	679109.1673	44.3165	-6 49 34.63	145.4400	-0.020000
F-1	4106+59.5064	44.0023	5307.6163	307.7344	44.0023	159.5064	454455.2316	679117.9134			154.2390	-0.020000
F-2	4106+68.3054	44.0023	5307.7141	307.9243	44.0023	168.3054	454454.2685	679126.6595			163.0380	-0.020000
F-3	4106+77.1044	44.0023	5307.8088	308.0847	44.0023	177.1044	454453.3054	679135.4057			171.8370	-0.020000
F-4	4106+85.9034	44.0023	5307.9004	308.2156	44.0023	185.9034	454452.3423	679144.1518			180.6360	-0.020000
F-5	4106+94.7024	44.0023	5307.9889	308.3172	44.0023	194.7024	454451.3792	679152.8979			189.4350	-0.020000
F-6	4107+03.5014	44.0023	5308.0743	308.3895	44.0023	203.5014	454450.4161	679161.6441			198.2340	-0.020000
F-7	4107+12.3004	44.0023	5308.1566	308.4324	44.0023	212.3004	454449.4530	679170.3902			207.0330	-0.020000
F-8	4107+21.0994	44.0023	5308.2357	308.4459	44.0023	221.0994	454448.4899	679179.1363			215.8320	-0.020000
F-9	4107+29.8984	44.0023	5308.3118	308.4300	44.0023	229.8984	454447.5268	679187.8825			224.6310	-0.020000
BK BRG P2	4107+38.6974	44.0023	5308.3847	308.3847	44.0023	238.6974	454446.5637	679196.6286	44.3165	-6 49 34.63	233.4300	-0.020000
CL P2	4107+39.7074	44.0023	5308.3929		44.0023	239.7074	454446.4531	679197.6325	44.3165	-6 49 34.63	234.4400	-0.020000
AH BRG P2	4107+40.7074	44.0023	5308.4009	308.4009	44.0023	240.7074	454446.3437	679198.6265	44.3165	-6 49 34.63	235.4400	-0.020000
F-1	4107+47.2074	44.0023	5308.4523	308.4874	44.0023	247.2074	454445.6322	679205.0875			241.9400	-0.020000
F-2	4107+53.7074	44.0023	5308.5019	308.5644	44.0023	253.7074	454444.9208	679211.5484			248.4400	-0.020000
F-3	4107+60.2074	44.0023	5308.5499	308.6318	44.0023	260.2074	454444.2093	679218.0094			254.9400	-0.020000
F-4	4107+66.7074	44.0023	5308.5961	308.6897	44.0023	266.7074	454443.4978	679224.4703			261.4400	-0.020000
F-5	4107+73.2074	44.0023	5308.6407	308.7382	44.0023	273.2074	454442.7864	679230.9312			267.9400	-0.020000
F-6	4107+79.7074	44.0023	5308.6836	308.7772	44.0023	279.7074	454442.0749	679237.3922			274.4400	-0.020000
F-7	4107+86.2074	44.0023	5308.7247	308.8066	44.0023	286.2074	454441.3634	679243.8531			280.9400	-0.020000
F-8	4107+92.7074	44.0023	5308.7642	308.8266	44.0023	292.7074	454440.6520	679250.3141			287.4400	-0.020000
F-9	4107+99.2074	44.0023	5308.8019	308.8370	44.0023	299.2074	454439.9405	679256.7750			293.9400	-0.020000
CL BRG EB3	4108+05.7074	44.0023	5308.8380	308.8380	44.0023	305.7074	454439.2290	679263.2360	44.3165	-6 49 34.63	300.4400	-0.020000
BF EB3	4108+07.2174	44.0023	5308.8461		44.0023	307.2174	454439.0638	679264.7369	44.3165	-6 49 34.63	301.9500	-0.020000

NOTES:
1. ELEVATIONS ARE AT TOP OF CONCRETE DECK 0.2500 FEET BELOW FINISHED GRADE.
2. POSITIVE ROADWAY CROSS SLOPE IS UPWARDS FROM THE PROFILE GRADE LINE.
3. THESE STATIONS, COORDINATES, OFFSETS AND LENGTHS DEFINE THE LAYOUT OF THE STRUCTURE IN A TWO DIMENSIONAL HORIZONTAL PLANE. ELEVATIONS DEFINE THE FINAL GRADE OF THE FINISHED CONCRETE DECK. FABRICATION OF STRUCTURAL COMPONENTS THROUGH THE DIRECT USE OF THIS INFORMATION IS NOT INTENDED OR ADVISABLE.

Design	INITIAL	DATE	Detail	INITIAL	DATE	Quantities	INITIAL	DATE
Designed By	CCH	05/15	Detailed By	MJW	05/15	Quantities By	JWG	05/15
Checked By	MAG	05/15	Checked By	CCH	05/15	Checked By	CCH	05/15

P:\1303354DB - I-70 over Havana DB\19339\Bridge\Drawings\19339BRDG_B139-45-DeckElev.dgn
isaiah.quintana
6/29/2015 6:00:15 PM
DGN MODEL:Border5

Print Date: 6/29/2015
File Name: 19339BRDG_B139-45-DeckElev.dgn
Horiz. Scale: None Vert. Scale: None
Staff Bridge Branch - Unit 0224 AJP

TSIOUVARAS SIMMONS HOLDERNESS

Sheet Revisions		
Date:	Comments	Init.

Colorado Department of Transportation
4670 N. Holly
Denver, CO 80216
Phone: 303-398-6767 FAX: 303-398-6781
Region 1 KK

As Constructed
No Revisions:
Revised:
Void:

I-70 OVER HAVANA STREET DESIGN-BUILD
I-70 BRIDGE OVER HAVANA
BRIDGE DECK ELEVATIONS (5 OF 7)

Designer: J. Garrison
Detailer: M. Welch
Structure Numbers: E-17-VD
Sheet Subset: Bridge 2
Subset Sheets: B43 of 45

Project No./Code
FBR 0704-230
19339
Sheet Number 81

RFC02 JUNE, 2015 (REVIEW)

GIRDER 26 — PARALLEL TO HORIZONTAL CONTROL — 0.250000 FEET BELOW FINISHED GRADE

BENT LINE	STATION	OFFSET	ELEVATION	ELEV+DL	X	Y	NORTHING	EASTING	BENT LNTH	SKEW	GIRDER LNTH	CRS-SLP
*REF LINE	4105+05.9932	50.0650	5305.2873		50.0650	5.9932	454466.0083	678964.6590	50.4224	-6 49 34.63	0.0000	-0.020000
BF EB1	4106+49.9232	50.0650	5307.3849		50.0650	149.9232	454450.2543	679107.7242	50.4224	-6 49 34.63	143.9300	-0.020000
CL BRG EB1	4106+51.4332	50.0650	5307.4025	307.4025	50.0650	151.4332	454450.0890	679109.2251	50.4224	-6 49 34.63	145.4400	-0.020000
F-1	4106+60.2322	50.0650	5307.5032	307.6214	50.0650	160.2322	454449.1259	679117.9712			154.2390	-0.020000
F-2	4106+69.0312	50.0650	5307.6008	307.8110	50.0650	169.0312	454448.1628	679126.7174			163.0380	-0.020000
F-3	4106+77.8302	50.0650	5307.6953	307.9711	50.0650	177.8302	454447.1997	679135.4635			171.8370	-0.020000
F-4	4106+86.6292	50.0650	5307.7866	308.1018	50.0650	186.6292	454446.2366	679144.2096			180.6360	-0.020000
F-5	4106+95.4282	50.0650	5307.8748	308.2031	50.0650	195.4282	454445.2735	679152.9558			189.4350	-0.020000
F-6	4107+04.2272	50.0650	5307.9600	308.2752	50.0650	204.2272	454444.3104	679161.7019			198.2340	-0.020000
F-7	4107+13.0262	50.0650	5308.0420	308.3178	50.0650	213.0262	454443.3473	679170.4480			207.0330	-0.020000
F-8	4107+21.8252	50.0650	5308.1209	308.3310	50.0650	221.8252	454442.3842	679179.1942			215.8320	-0.020000
F-9	4107+30.6242	50.0650	5308.1967	308.3148	50.0650	230.6242	454441.4211	679187.9403			224.6310	-0.020000
BK BRG P2	4107+39.4232	50.0650	5308.2693	308.2693	50.0650	239.4232	454440.4580	679196.6864	50.4224	-6 49 34.63	233.4300	-0.020000
CL P2	4107+40.4332	50.0650	5308.2775		50.0650	240.4332	454440.3474	679197.6904	50.4224	-6 49 34.63	234.4400	-0.020000
AH BRG P2	4107+41.4332	50.0650	5308.2855	308.2855	50.0650	241.4332	454440.2380	679198.6844	50.4224	-6 49 34.63	235.4400	-0.020000
F-1	4107+47.9332	50.0650	5308.3367	308.3717	50.0650	247.9332	454439.5265	679205.1453			241.9400	-0.020000
F-2	4107+54.4332	50.0650	5308.3861	308.4485	50.0650	254.4332	454438.8150	679211.6063			248.4400	-0.020000
F-3	4107+60.9332	50.0650	5308.4339	308.5158	50.0650	260.9332	454438.1036	679218.0672			254.9400	-0.020000
F-4	4107+67.4332	50.0650	5308.4800	308.5735	50.0650	267.4332	454437.3921	679224.5281			261.4400	-0.020000
F-5	4107+73.9332	50.0650	5308.5243	308.6218	50.0650	273.9332	454436.6806	679230.9891			267.9400	-0.020000
F-6	4107+80.4332	50.0650	5308.5670	308.6606	50.0650	280.4332	454435.9692	679237.4500			274.4400	-0.020000
F-7	4107+86.9332	50.0650	5308.6080	308.6899	50.0650	286.9332	454435.2577	679243.9110			280.9400	-0.020000
F-8	4107+93.4332	50.0650	5308.6472	308.7096	50.0650	293.4332	454434.5463	679250.3719			287.4400	-0.020000
F-9	4107+99.9332	50.0650	5308.6848	308.7199	50.0650	299.9332	454433.8348	679256.8329			293.9400	-0.020000
CL BRG EB3	4108+06.4332	50.0650	5308.7207	308.7207	50.0650	306.4332	454433.1233	679263.2938	50.4224	-6 49 34.63	300.4400	-0.020000
BF EB3	4108+07.9432	50.0650	5308.7288		50.0650	307.9432	454432.9580	679264.7947	50.4224	-6 49 34.63	301.9500	-0.020000

GIRDER 27 — PARALLEL TO HORIZONTAL CONTROL — 0.250000 FEET BELOW FINISHED GRADE

BENT LINE	STATION	OFFSET	ELEVATION	ELEV+DL	X	Y	NORTHING	EASTING	BENT LNTH	SKEW	GIRDER LNTH	CRS-SLP
*REF LINE	4105+06.7190	56.1278	5305.1787		56.1278	6.7190	454459.9025	678964.7168	56.5285	-6 49 34.63	0.0000	-0.020000
BF EB1	4106+50.6490	56.1278	5307.2721		56.1278	150.6490	454444.1485	679107.7820	56.5285	-6 49 34.63	143.9300	-0.020000
CL BRG EB1	4106+52.1590	56.1278	5307.2897	307.2897	56.1278	152.1590	454443.9832	679109.2829	56.5285	-6 49 34.63	145.4400	-0.020000
F-1	4106+60.9580	56.1278	5307.3901	307.5083	56.1278	160.9580	454443.0201	679118.0291			154.2390	-0.020000
F-2	4106+69.7570	56.1278	5307.4874	307.6976	56.1278	169.7570	454442.0570	679126.7752			163.0380	-0.020000
F-3	4106+78.5560	56.1278	5307.5816	307.8575	56.1278	178.5560	454441.0939	679135.5213			171.8370	-0.020000
F-4	4106+87.3550	56.1278	5307.6727	307.9879	56.1278	187.3550	454440.1308	679144.2675			180.6360	-0.020000
F-5	4106+96.1540	56.1278	5307.7607	308.0890	56.1278	196.1540	454439.1677	679153.0136			189.4350	-0.020000
F-6	4107+04.9530	56.1278	5307.8456	308.1608	56.1278	204.9530	454438.2046	679161.7597			198.2340	-0.020000
F-7	4107+13.7520	56.1278	5307.9273	308.2032	56.1278	213.7520	454437.2415	679170.5059			207.0330	-0.020000
F-8	4107+22.5510	56.1278	5308.0060	308.2162	56.1278	222.5510	454436.2784	679179.2520			215.8320	-0.020000
F-9	4107+31.3500	56.1278	5308.0815	308.1997	56.1278	231.3500	454435.3153	679187.9981			224.6310	-0.020000
BK BRG P2	4107+40.1490	56.1278	5308.1539	308.1539	56.1278	240.1490	454434.3522	679196.7443	56.5285	-6 49 34.63	233.4300	-0.020000
CL P2	4107+41.1590	56.1278	5308.1620		56.1278	241.1590	454434.2416	679197.7482	56.5285	-6 49 34.63	234.4400	-0.020000
AH BRG P2	4107+42.1590	56.1278	5308.1700	308.1700	56.1278	242.1590	454434.1322	679198.7422	56.5285	-6 49 34.63	235.4400	-0.020000
F-1	4107+48.6590	56.1278	5308.2210	308.2561	56.1278	248.6590	454433.4207	679205.2031			241.9400	-0.020000
F-2	4107+55.1590	56.1278	5308.2703	308.3327	56.1278	255.1590	454432.7092	679211.6641			248.4400	-0.020000
F-3	4107+61.6590	56.1278	5308.3179	308.3998	56.1278	261.6590	454431.9978	679218.1250			254.9400	-0.020000
F-4	4107+68.1590	56.1278	5308.3637	308.4573	56.1278	268.1590	454431.2863	679224.5860			261.4400	-0.020000
F-5	4107+74.6590	56.1278	5308.4079	308.5054	56.1278	274.6590	454430.5748	679231.0469			267.9400	-0.020000
F-6	4107+81.1590	56.1278	5308.4504	308.5440	56.1278	281.1590	454429.8634	679237.5079			274.4400	-0.020000
F-7	4107+87.6590	56.1278	5308.4912	308.5731	56.1278	287.6590	454429.1519	679243.9688			280.9400	-0.020000
F-8	4107+94.1590	56.1278	5308.5303	308.5927	56.1278	294.1590	454428.4404	679250.4298			287.4400	-0.020000
F-9	4108+00.6590	56.1278	5308.5676	308.6027	56.1278	300.6590	454427.7290	679256.8907			293.9400	-0.020000
CL BRG EB3	4108+07.1590	56.1278	5308.6033	308.6033	56.1278	307.1590	454427.0175	679263.3516	56.5285	-6 49 34.63	300.4400	-0.020000
BF EB3	4108+08.6690	56.1278	5308.6114		56.1278	308.6690	454426.8522	679264.8526	56.5285	-6 49 34.63	301.9500	-0.020000

GIRDER 28 — PARALLEL TO HORIZONTAL CONTROL — 0.250000 FEET BELOW FINISHED GRADE

BENT LINE	STATION	OFFSET	ELEVATION	ELEV+DL	X	Y	NORTHING	EASTING	BENT LNTH	SKEW	GIRDER LNTH	CRS-SLP
*REF LINE	4105+07.4447	62.1906	5305.0701		62.1906	7.4447	454453.7967	678964.7745	62.6346	-6 49 34.63	0.0000	-0.020000
BF EB1	4106+51.3747	62.1906	5307.1593		62.1906	151.3747	454438.0427	679107.8397	62.6346	-6 49 34.63	143.9300	-0.020000
CL BRG EB1	4106+52.8847	62.1906	5307.1768	307.1768	62.1906	152.8847	454437.8774	679109.3407	62.6346	-6 49 34.63	145.4400	-0.020000
F-1	4106+61.6837	62.1906	5307.2770	307.3952	62.1906	161.6837	454436.9143	679118.0868			154.2390	-0.020000
F-2	4106+70.4827	62.1906	5307.3741	307.5842	62.1906	170.4827	454435.9512	679126.8329			163.0380	-0.020000
F-3	4106+79.2817	62.1906	5307.4680	307.7439	62.1906	179.2817	454434.9881	679135.5791			171.8370	-0.020000
F-4	4106+88.0807	62.1906	5307.5589	307.8740	62.1906	188.0807	454434.0250	679144.3252			180.6360	-0.020000
F-5	4106+96.8797	62.1906	5307.6466	307.9749	62.1906	196.8797	454433.0619	679153.0713			189.4350	-0.020000
F-6	4107+05.6787	62.1906	5307.7312	308.0464	62.1906	205.6787	454432.0988	679161.8175			198.2340	-0.020000
F-7	4107+14.4777	62.1906	5307.8127	308.0885	62.1906	214.4777	454431.1357	679170.5636			207.0330	-0.020000
F-8	4107+23.2767	62.1906	5307.8911	308.1012	62.1906	223.2767	454430.1726	679179.3097			215.8320	-0.020000
F-9	4107+32.0757	62.1906	5307.9664	308.0845	62.1906	232.0757	454429.2095	679188.0559			224.6310	-0.020000
BK BRG P2	4107+40.8747	62.1906	5308.0385	308.0385	62.1906	240.8747	454428.2464	679196.8020	62.6346	-6 49 34.63	233.4300	-0.020000
CL P2	4107+41.8847	62.1906	5308.0466		62.1906	241.8847	454428.1358	679197.8059	62.6346	-6 49 34.63	234.4400	-0.020000
AH BRG P2	4107+42.8847	62.1906	5308.0546	308.0546	62.1906	242.8847	454428.0263	679198.7999	62.6346	-6 49 34.63	235.4400	-0.020000
F-1	4107+49.3847	62.1906	5308.1053	308.1404	62.1906	249.3847	454427.3149	679205.2609			241.9400	-0.020000
F-2	4107+55.8847	62.1906	5308.1544	308.2168	62.1906	255.8847	454426.6034	679211.7218			248.4400	-0.020000
F-3	4107+62.3847	62.1906	5308.2018	308.2837	62.1906	262.3847	454425.8920	679218.1828			254.9400	-0.020000
F-4	4107+68.8847	62.1906	5308.2475	308.3411	62.1906	268.8847	454425.1805	679224.6437			261.4400	-0.020000
F-5	4107+75.3847	62.1906	5308.2915	308.3890	62.1906	275.3847	454424.4690	679231.1046			267.9400	-0.020000
F-6	4107+81.8847	62.1906	5308.3338	308.4274	62.1906	281.8847	454423.7576	679237.5656			274.4400	-0.020000
F-7	4107+88.3847	62.1906	5308.3744	308.4563	62.1906	288.3847	454423.0461	679244.0265			280.9400	-0.020000
F-8	4107+94.8847	62.1906	5308.4133	308.4757	62.1906	294.8847	454422.3346	679250.4875			287.4400	-0.020000
F-9	4108+01.3847	62.1906	5308.4504	308.4855	62.1906	301.3847	454421.6232	679256.9484			293.9400	-0.020000
CL BRG EB3	4108+07.8847	62.1906	5308.4859	308.4859	62.1906	307.8847	454420.9117	679263.4094	62.6346	-6 49 34.63	300.4400	-0.020000
BF EB3	4108+09.3947	62.1906	5308.4939		62.1906	309.3947	454420.7464	679264.9103	62.6346	-6 49 34.63	301.9500	-0.020000

GIRDER 29 — PARALLEL TO HORIZONTAL CONTROL — 0.250000 FEET BELOW FINISHED GRADE

BENT LINE	STATION	OFFSET	ELEVATION	ELEV+DL	X	Y	NORTHING	EASTING	BENT LNTH	SKEW	GIRDER LNTH	CRS-SLP
*REF LINE	4105+08.1705	68.2534	5304.9614		68.2534	8.1705	454447.6909	678964.8324	68.7407	-6 49 34.63	0.0000	-0.020000
BF EB1	4106+52.1005	68.2534	5307.0465		68.2534	152.1005	454431.9369	679107.8976	68.7407	-6 49 34.63	143.9300	-0.020000
CL BRG EB1	4106+53.6105	68.2534	5307.0640	307.0640	68.2534	153.6105	454431.7716	679109.3985	68.7407	-6 49 34.63	145.4400	-0.020000
F-1	4106+62.4095	68.2534	5307.1639	307.2820	68.2534	162.4095	454430.8085	679118.1446			154.2390	-0.020000
F-2	4106+71.2085	68.2534	5307.2607	307.4708	68.2534	171.2085	454429.8454	679126.8908			163.0380	-0.020000
F-3	4106+80.0075	68.2534	5307.3544	307.6302	68.2534	180.0075	454428.8823	679135.6369			171.8370	-0.020000
F-4	4106+88.8065	68.2534	5307.4450	307.7601	68.2534	188.8065	454427.9192	679144.3830			180.6360	-0.020000
F-5	4106+97.6055	68.2534	5307.5324	307.8607	68.2534	197.6055	454426.9561	679153.1292			189.4350	-0.020000
F-6	4107+06.4045	68.2534	5307.6168	307.9320	68.2534	206.4045	454425.9930	679161.8753			198.2340	-0.020000
F-7	4107+15.2035	68.2534	5307.6980	307.9739	68.2534	215.2035	454425.0299	679170.6214			207.0330	-0.020000
F-8	4107+24.0025	68.2534	5307.7762	307.9863	68.2534	224.0025	454424.0667	679179.3676			215.8320	-0.020000
F-9	4107+32.8015	68.2534	5307.8512	307.9693	68.2534	232.8015	454423.1036	679188.1137			224.6310	-0.020000
BK BRG P2	4107+41.6005	68.2534	5307.9231	307.9231	68.2534	241.6005	454422.1405	679196.8598	68.7407	-6 49 34.63	233.4300	-0.020000
CL P2	4107+42.6105	68.2534	5307.9311		68.2534	242.6105	454422.0300	679197.8638	68.7407	-6 49 34.63	234.4400	-0.020000
AH BRG P2	4107+43.6105	68.2534	5307.9391	307.9391	68.2534	243.6105	454421.9205	679198.8577	68.7407	-6 49 34.63	235.4400	-0.020000
F-1	4107+50.1105	68.2534	5307.9897	308.0247	68.2534	250.1105	454421.2091	679205.3187			241.9400	-0.020000
F-2	4107+56.6105	68.2534	5308.0385	308.1010	68.2534	256.6105	454420.4976	679211.7796			248.4400	-0.020000
F-3	4107+63.1105	68.2534	5308.0857	308.1677	68.2534	263.1105	454419.7861	679218.2406			254.9400	-0.020000
F-4	4107+69.6105	68.2534	5308.1312	308.2248	68.2534	269.6105	454419.0747	679224.7015			261.4400	-0.020000
F-5	4107+76.1105	68.2534	5308.1750	308.2725	68.2534	276.1105	454418.3632	679231.1625			267.9400	-0.020000
F-6	4107+82.6105	68.2534	5308.2171	308.3107	68.2534	282.6105	454417.6517	679237.6234			274.4400	-0.020000
F-7	4107+89.1105	68.2534	5308.2575	308.3394	68.2534	289.1105	454416.9403	679244.0844			280.9400	-0.020000
F-8	4107+95.6105	68.2534	5308.2962	308.3586	68.2534	295.6105	454416.2288	679250.5453			287.4400	-0.020000
F-9	4108+02.1105	68.2534	5308.3332	308.3683	68.2534	302.1105	454415.5174	679257.0063			293.9400	-0.020000
CL BRG EB3	4108+08.6105	68.2534	5308.3685	308.3685	68.2534	308.6105	454414.8059	679263.4672	68.7407	-6 49 34.63	300.4400	-0.020000
BF EB3	4108+10.1205	68.2534	5308.3765		68.2534	310.1205	454414.6406	679264.9681	68.7407	-6 49 34.63	301.9500	-0.020000

GIRDER 30 — PARALLEL TO HORIZONTAL CONTROL — 0.250000 FEET BELOW FINISHED GRADE

BENT LINE	STATION	OFFSET	ELEVATION	ELEV+DL	X	Y	NORTHING	EASTING	BENT LNTH	SKEW	GIRDER LNTH	CRS-SLP
*REF LINE	4105+08.8962	74.3161	5304.8528		74.3161	8.8962	454441.5852	678964.8901	74.8467	-6 49 34.63	0.0000	-0.020000
BF EB1	4106+52.8262	74.3161	5306.9336		74.3161	152.8262	454425.8312	679107.9553	74.8467	-6 49 34.63	143.9300	-0.020000
CL BRG EB1	4106+54.3362	74.3161	5306.9511	306.9511	74.3161	154.3362	454425.6659	679109.4562	74.8467	-6 49 34.63	145.4400	-0.020000
F-1	4106+63.1352	74.3161	5307.0507	307.1689	74.3161	163.1352	454424.7028	679118.2024			154.2390	-0.020000
F-2	4106+71.9342	74.3161	5307.1473	307.3574	74.3161	171.9342	454423.7397	679126.9485			163.0380	-0.020000
F-3	4106+80.7332	74.3161	5307.2407	307.5165	74.3161	180.7332	454422.7766	679135.6946			171.8370	-0.020000
F-4	4106+89.5322	74.3161	5307.3310	307.6462	74.3161	189.5322	454421.8135	679144.4408			180.6360	-0.020000
F-5	4106+98.3312	74.3161	5307.4182	307.7465	74.3161	198.3312	454420.8504	679153.1869			189.4350	-0.020000
F-6	4107+07.1302	74.3161	5307.5023	307.8175	74.3161	207.1302	454419.8873	679161.9330			198.2340	-0.020000
F-7	4107+15.9292	74.3161	5307.5833	307.8592	74.3161	215.9292	454418.9241	679170.6792			207.0330	-0.020000
F-8	4107+24.7282	74.3161	5307.6612	307.8714	74.3161	224.7282	454417.9610	679179.4253			215.8320	-0.020000
F-9	4107+33.5272	74.3161	5307.7360	307.8541	74.3161	233.5272	454416.9979	679188.1714			224.6310	-0.020000
BK BRG P2	4107+42.3262	74.3161	5307.8076	307.8076	74.3161	242.3262	454416.0348	679196.9176	74.8467	-6 49 34.63	233.4300	-0.020000
CL P2	4107+43.3362	74.3161	5307.8156		74.3161	243.3362	454415.9243	679197.9215	74.8467	-6 49 34.63	234.4400	-0.020000
AH BRG P2	4107+44.3362	74.3161	5307.8235	307.8235	74.3161	244.3362	454415.8148	679198.9155	74.8467	-6 49 34.63	235.4400	-0.020000
F-1	4107+50.8362	74.3161	5307.8739	307.9090	74.3161	250.8362	454415.1034	679205.3764			241.9400	-0.020000
F-2	4107+57.3362	74.3161	5307.9226	307.9851	74.3161	257.3362	454414.3919	679211.8374			248.4400	-0.020000
F-3	4107+63.8362	74.3161	5307.9697	308.0516	74.3161	263.8362	454413.6804	679218.2983			254.9400	-0.020000
F-4	4107+70.3362	74.3161	5308.0150	308.1086	74.3161	270.3362	454412.9690	679224.7593			261.4400	-0.020000
F-5	4107+76.8362	74.3161	5308.0586	308.1560	74.3161	276.8362	454412.2575	679231.2202			267.9400	-0.020000
F-6	4107+83.3362	74.3161	5308.1005	308.1941	74.3161	283.3362	454411.5460	679237.6812			274.4400	-0.020000
F-7	4107+89.8362	74.3161	5308.1407	308.2226	74.3161	289.8362	454410.8346	679244.1421			280.9400	-0.020000
F-8	4107+96.3362	74.3161	5308.1792	308.2416	74.3161	296.3362	454410.1231	679250.6031			287.4400	-0.020000
F-9	4108+02.8362	74.3161	5308.2160	308.2511	74.3161	302.8362	454409.4116	679257.0640			293.9400	-0.020000
CL BRG EB3	4108+09.3362	74.3161	5308.2511	308.2511	74.3161	309.3362	454408.7002	679263.5249	74.8467	-6 49 34.63	300.4400	-0.020000
BF EB3	4108+10.8462	74.3161	5308.2590		74.3161	310.8462	454408.5349	679265.0259	74.8467	-6 49 34.63	301.9500	-0.020000

GIRDER 31 — PARALLEL TO HORIZONTAL CONTROL — 0.250000 FEET BELOW FINISHED GRADE

BENT LINE	STATION	OFFSET	ELEVATION	ELEV+DL	X	Y	NORTHING	EASTING	BENT LNTH	SKEW	GIRDER LNTH	CRS-SLP
*REF LINE	4105+09.6220	80.3789	5304.7441		80.3789	9.6220	454435.4794	678964.9479	80.9528	-6 49 34.63	0.0000	-0.020000
BF EB1	4106+53.5520	80.3789	5306.8208		80.3789	153.5520	454419.7253	679108.0131	80.9528	-6 49 34.63	143.9300	-0.020000
CL BRG EB1	4106+55.0620	80.3789	5306.8381	306.8381	80.3789	155.0620	454419.5601	679109.5141	80.9528	-6 49 34.63	145.4400	-0.020000
F-1	4106+63.8610	80.3789	5306.9376	307.0557	80.3789	163.8610	454418.5970	679118.2602			154.2390	-0.020000
F-2	4106+72.6600	80.3789	5307.0338	307.2440	80.3789	172.6600	454417.6339	679127.0063			163.0380	-0.020000
F-3	4106+81.4590	80.3789	5307.1270	307.4029	80.3789	181.4590	454416.6707	679135.7525			171.8370	-0.020000
F-4	4106+90.2580	80.3789	5307.2171	307.5323	80.3789	190.2580	454415.7076	679144.4986			180.6360	-0.020000
F-5	4106+99.0570	80.3789	5307.3040	307.6323	80.3789	199.0570	454414.7445	679153.2447			189.4350	-0.020000
F-6	4107+07.8560	80.3789	5307.3879	307.7031	80.3789	207.8560	454413.7814	679161.9909			198.2340	-0.020000
F-7	4107+16.6550	80.3789	5307.4686	307.7444	80.3789	216.6550	454412.8183	679170.7370			207.0330	-0.020000
F-8	4107+25.4540	80.3789	5307.5462	307.7564	80.3789	225.4540	454411.8552	679179.4831			215.8320	-0.020000
F-9	4107+34.2530	80.3789	5307.6207	307.7389	80.3789	234.2530	454410.8921	679188.2293			224.6310	-0.020000
BK BRG P2	4107+43.0520	80.3789	5307.6921	307.6921	80.3789	243.0520	454409.9290	679196.9754	80.9528	-6 49 34.63	233.4300	-0.020000
CL P2	4107+44.0620	80.3789	5307.7001		80.3789	244.0620	454409.8185	679197.9793	80.9528	-6 49 34.63	234.4400	-0.020000
AH BRG P2	4107+45.0620	80.3789	5307.7080	307.7080	80.3789	245.0620	454409.7090	679198.9733	80.9528	-6 49 34.63	235.4400	-0.020000
F-1	4107+51.5620	80.3789	5307.7582	307.7933	80.3789	251.5620	454408.9975	679205.4343			241.9400	-0.020000
F-2	4107+58.0620	80.3789	5307.8067	307.8691	80.3789	258.0620	454408.2861	679211.8952			248.4400	-0.020000
F-3	4107+64.5620	80.3789	5307.8535	307.9355	80.3789	264.5620	454407.5746	679218.3562			254.9400	-0.020000
F-4	4107+71.0620	80.3789	5307.8987	307.9922	80.3789	271.0620	454406.8632	679224.8171			261.4400	-0.020000
F-5	4107+77.5620	80.3789	5307.9421	308.0396	80.3789	277.5620	454406.1517	679231.2780			267.9400	-0.020000
F-6	4107+84.0620	80.3789	5307.9838	308.0774	80.3789	284.0620	454405.4402	679237.7390			274.4400	-0.020000
F-7	4107+90.5620	80.3789	5308.0238	308.1057	80.3789	290.5620	454404.7288	679244.1999			280.9400	-0.020000
F-8	4107+97.0620	80.3789	5308.0621	308.1246	80.3789	297.0620	454404.0173	679250.6609			287.4400	-0.020000
F-9	4108+03.5620	80.3789	5308.0988	308.1338	80.3789	303.5620	454403.3058	679257.1218			293.9400	-0.020000
CL BRG EB3	4108+10.0620	80.3789	5308.1337	308.1337	80.3789	310.0620	454402.5944	679263.5828	80.9528	-6 49 34.63	300.4400	-0.020000
BF EB3	4108+11.5720	80.3789	5308.1416		80.3789	311.5720	454402.4291	679265.0837	80.9528	-6 49 34.63	301.9500	-0.020000

NOTES:
1. ELEVATIONS ARE AT TOP OF CONCRETE DECK 0.2500 FEET BELOW FINISHED GRADE.
2. POSITIVE ROADWAY CROSS SLOPE IS UPWARDS FROM THE PROFILE GRADE LINE.
3. THESE STATIONS, COORDINATES, OFFSETS AND LENGTHS DEFINE THE LAYOUT OF THE STRUCTURE IN A TWO DIMENSIONAL HORIZONTAL PLANE. ELEVATIONS DEFINE THE FINAL GRADE OF THE FINISHED CONCRETE DECK. FABRICATION OF STRUCTURAL COMPONENTS THROUGH THE DIRECT USE OF THIS INFORMATION IS NOT INTENDED OR ADVISABLE.

Design	INITIAL	DATE	Detail	INITIAL	DATE	Quantities	INITIAL	DATE
Designed By	CCH	05/15	Detailed By	MJW	05/15	Quantities By	JWG	05/15
Checked By	MAG	05/15	Checked By	CCH	05/15	Checked By	CCH	05/15

P:\1303354DB - I-70 over Havana DB\19339\Bridge\Drawings\19339BRDG_B139-45-DeckElev.dgn
isaiah.quintana
6/29/2015 6:00:16 PM
DGN MODEL:Border6

Print Date: 6/29/2015
File Name: 19339BRDG_B139-45-DeckElev.dgn
Horiz. Scale: None Vert. Scale: None
Staff Bridge Branch - Unit 0224 AJP

TSIOUVARAS SIMMONS HOLDERNESS

Sheet Revisions		
Date:	Comments	Init.

Colorado Department of Transportation
4670 N. Holly
Denver, CO 80216
Phone: 303-398-6767 FAX: 303-398-6781
Region 1 KK

As Constructed
No Revisions:
Revised:
Void:

I-70 OVER HAVANA STREET DESIGN-BUILD
I-70 BRIDGE OVER HAVANA
BRIDGE DECK ELEVATIONS (6 OF 7)

Designer: J. Garrison
Detailer: M. Welch
Structure Numbers: E-17-VD
Sheet Subset: Bridge 2
Subset Sheets: B44 of 45

Project No./Code
FBR 0704-230
19339
Sheet Number 82

RFC02 JUNE, 2015 (REVIEW)

GIRDER 32 — PARALLEL TO HORIZONTAL CONTROL — 0.250000 FEET BELOW FINISHED GRADE

BENT LINE	STATION	OFFSET	ELEVATION	ELEV+DL	X	Y	NORTHING	EASTING	BENT LNTH	SKEW	GIRDER LNTH	CRS-SLP
*REF LINE	4105+10.3478	86.4417	5304.6354		86.4417	10.3478	454429.3735	678965.0058	87.0589	-6 49 34.63	0.0000	-0.020000
BF EB1	4106+54.2778	86.4417	5306.7079		86.4417	154.2778	454413.6195	679108.0710	87.0589	-6 49 34.63	143.9300	-0.020000
CL BRG EB1	4106+55.7878	86.4417	5306.7252	306.7252	86.4417	155.7878	454413.4542	679109.5719	87.0589	-6 49 34.63	145.4400	-0.020000
F-1	4106+64.5868	86.4417	5306.8244	306.9425	86.4417	164.5868	454412.4911	679118.3180			154.2390	-0.020000
F-2	4106+73.3858	86.4417	5306.9204	307.1306	86.4417	173.3858	454411.5280	679127.0642			163.0380	-0.020000
F-3	4106+82.1848	86.4417	5307.0133	307.2891	86.4417	182.1848	454410.5649	679135.8103			171.8370	-0.020000
F-4	4106+90.9838	86.4417	5307.1031	307.4183	86.4417	190.9838	454409.6018	679144.5564			180.6360	-0.020000
F-5	4106+99.7828	86.4417	5307.1898	307.5181	86.4417	199.7828	454408.6387	679153.3026			189.4350	-0.020000
F-6	4107+08.5818	86.4417	5307.2734	307.5886	86.4417	208.5818	454407.6756	679162.0487			198.2340	-0.020000
F-7	4107+17.3808	86.4417	5307.3539	307.6297	86.4417	217.3808	454406.7125	679170.7948			207.0330	-0.020000
F-8	4107+26.1798	86.4417	5307.4312	307.6414	86.4417	226.1798	454405.7494	679179.5410			215.8320	-0.020000
F-9	4107+34.9788	86.4417	5307.5055	307.6237	86.4417	234.9788	454404.7863	679188.2871			224.6310	-0.020000
BK BRG P2	4107+43.7778	86.4417	5307.5766	307.5766	86.4417	243.7778	454403.8232	679197.0332	87.0589	-6 49 34.63	233.4300	-0.020000
CL P2	4107+44.7878	86.4417	5307.5846		86.4417	244.7878	454403.7127	679198.0372	87.0589	-6 49 34.63	234.4400	-0.020000
AH BRG P2	4107+45.7878	86.4417	5307.5924	307.5924	86.4417	245.7878	454403.6032	679199.0311	87.0589	-6 49 34.63	235.4400	-0.020000
F-1	4107+52.2878	86.4417	5307.6425	307.6775	86.4417	252.2878	454402.8917	679205.4921			241.9400	-0.020000
F-2	4107+58.7878	86.4417	5307.6908	307.7532	86.4417	258.7878	454402.1803	679211.9530			248.4400	-0.020000
F-3	4107+65.2878	86.4417	5307.7374	307.8193	86.4417	265.2878	454401.4688	679218.4140			254.9400	-0.020000
F-4	4107+71.7878	86.4417	5307.7823	307.8759	86.4417	271.7878	454400.7573	679224.8749			261.4400	-0.020000
F-5	4107+78.2878	86.4417	5307.8256	307.9230	86.4417	278.2878	454400.0459	679231.3359			267.9400	-0.020000
F-6	4107+84.7878	86.4417	5307.8671	307.9607	86.4417	284.7878	454399.3344	679237.7968			274.4400	-0.020000
F-7	4107+91.2878	86.4417	5307.9069	307.9888	86.4417	291.2878	454398.6229	679244.2578			280.9400	-0.020000
F-8	4107+97.7878	86.4417	5307.9451	308.0075	86.4417	297.7878	454397.9115	679250.7187			287.4400	-0.020000
F-9	4108+04.2878	86.4417	5307.9815	308.0166	86.4417	304.2878	454397.2000	679257.1797			293.9400	-0.020000
CL BRG EB3	4108+10.7878	86.4417	5308.0162	308.0162	86.4417	310.7878	454396.4885	679263.6406	87.0589	-6 49 34.63	300.4400	-0.020000
BF EB3	4108+12.2978	86.4417	5308.0240		86.4417	312.2978	454396.3233	679265.1415	87.0589	-6 49 34.63	301.9500	-0.020000

GIRDER 33 — PARALLEL TO HORIZONTAL CONTROL — 0.250000 FEET BELOW FINISHED GRADE

BENT LINE	STATION	OFFSET	ELEVATION	ELEV+DL	X	Y	NORTHING	EASTING	BENT LNTH	SKEW	GIRDER LNTH	CRS-SLP
*REF LINE	4105+11.0735	92.5045	5304.5267		92.5045	11.0735	454423.2677	678965.0635	93.1649	-6 49 34.63	0.0000	-0.020000
BF EB1	4106+55.0035	92.5045	5306.5950		92.5045	155.0035	454407.5137	679108.1287	93.1649	-6 49 34.63	143.9300	-0.020000
CL BRG EB1	4106+56.5135	92.5045	5306.6122	306.6122	92.5045	156.5135	454407.3484	679109.6296	93.1649	-6 49 34.63	145.4400	-0.020000
F-1	4106+65.3125	92.5045	5306.7111	306.8293	92.5045	165.3125	454406.3853	679118.3758			154.2390	-0.020000
F-2	4106+74.1115	92.5045	5306.8069	307.0171	92.5045	174.1115	454405.4222	679127.1219			163.0380	-0.020000
F-3	4106+82.9105	92.5045	5306.8996	307.1754	92.5045	182.9105	454404.4591	679135.8680			171.8370	-0.020000
F-4	4106+91.7095	92.5045	5306.9891	307.3043	92.5045	191.7095	454403.4960	679144.6142			180.6360	-0.020000
F-5	4107+00.5085	92.5045	5307.0756	307.4039	92.5045	200.5085	454402.5329	679153.3603			189.4350	-0.020000
F-6	4107+09.3075	92.5045	5307.1589	307.4741	92.5045	209.3075	454401.5698	679162.1064			198.2340	-0.020000
F-7	4107+18.1065	92.5045	5307.2391	307.5150	92.5045	218.1065	454400.6067	679170.8526			207.0330	-0.020000
F-8	4107+26.9055	92.5045	5307.3162	307.5264	92.5045	226.9055	454399.6436	679179.5987			215.8320	-0.020000
F-9	4107+35.7045	92.5045	5307.3902	307.5084	92.5045	235.7045	454398.6805	679188.3448			224.6310	-0.020000
BK BRG P2	4107+44.5035	92.5045	5307.4611	307.4611	92.5045	244.5035	454397.7174	679197.0909	93.1649	-6 49 34.63	233.4300	-0.020000
CL P2	4107+45.5135	92.5045	5307.4690		92.5045	245.5135	454397.6068	679198.0949	93.1649	-6 49 34.63	234.4400	-0.020000
AH BRG P2	4107+46.5135	92.5045	5307.4768	307.4768	92.5045	246.5135	454397.4974	679199.0889	93.1649	-6 49 34.63	235.4400	-0.020000
F-1	4107+53.0135	92.5045	5307.5267	307.5618	92.5045	253.0135	454396.7859	679205.5498			241.9400	-0.020000
F-2	4107+59.5135	92.5045	5307.5748	307.6372	92.5045	259.5135	454396.0745	679212.0108			248.4400	-0.020000
F-3	4107+66.0135	92.5045	5307.6212	307.7032	92.5045	266.0135	454395.3630	679218.4717			254.9400	-0.020000
F-4	4107+72.5135	92.5045	5307.6660	307.7596	92.5045	272.5135	454394.6515	679224.9327			261.4400	-0.020000
F-5	4107+79.0135	92.5045	5307.7090	307.8065	92.5045	279.0135	454393.9401	679231.3936			267.9400	-0.020000
F-6	4107+85.5135	92.5045	5307.7504	307.8440	92.5045	285.5135	454393.2286	679237.8545			274.4400	-0.020000
F-7	4107+92.0135	92.5045	5307.7900	307.8719	92.5045	292.0135	454392.5171	679244.3155			280.9400	-0.020000
F-8	4107+98.5135	92.5045	5307.8279	307.8904	92.5045	298.5135	454391.8057	679250.7764			287.4400	-0.020000
F-9	4108+05.0135	92.5045	5307.8642	307.8993	92.5045	305.0135	454391.0942	679257.2374			293.9400	-0.020000
CL BRG EB3	4108+11.5135	92.5045	5307.8987	307.8987	92.5045	311.5135	454390.3827	679263.6983	93.1649	-6 49 34.63	300.4400	-0.020000
BF EB3	4108+13.0235	92.5045	5307.9065		92.5045	313.0235	454390.2175	679265.1993	93.1649	-6 49 34.63	301.9500	-0.020000

GIRDER 34 — PARALLEL TO HORIZONTAL CONTROL — 0.250000 FEET BELOW FINISHED GRADE

BENT LINE	STATION	OFFSET	ELEVATION	ELEV+DL	X	Y	NORTHING	EASTING	BENT LNTH	SKEW	GIRDER LNTH	CRS-SLP
*REF LINE	4105+11.7993	98.5673	5304.4180		98.5673	11.7993	454417.1619	678965.1213	99.2710	-6 49 34.63	0.0000	-0.020000
BF EB1	4106+55.7293	98.5673	5306.4820		98.5673	155.7293	454401.4079	679108.1865	99.2710	-6 49 34.63	143.9300	-0.020000
CL BRG EB1	4106+57.2393	98.5673	5306.4993	306.4993	98.5673	157.2393	454401.2426	679109.6875	99.2710	-6 49 34.63	145.4400	-0.020000
F-1	4106+66.0383	98.5673	5306.5979	306.7161	98.5673	166.0383	454400.2795	679118.4336			154.2390	-0.020000
F-2	4106+74.8373	98.5673	5306.6934	306.9036	98.5673	174.8373	454399.3164	679127.1797			163.0380	-0.020000
F-3	4106+83.6363	98.5673	5306.7858	307.0617	98.5673	183.6363	454398.3533	679135.9259			171.8370	-0.020000
F-4	4106+92.4353	98.5673	5306.8751	307.1903	98.5673	192.4353	454397.3902	679144.6720			180.6360	-0.020000
F-5	4107+01.2343	98.5673	5306.9613	307.2896	98.5673	201.2343	454396.4271	679153.4181			189.4350	-0.020000
F-6	4107+10.0333	98.5673	5307.0444	307.3596	98.5673	210.0333	454395.4640	679162.1642			198.2340	-0.020000
F-7	4107+18.8323	98.5673	5307.1243	307.4002	98.5673	218.8323	454394.5009	679170.9104			207.0330	-0.020000
F-8	4107+27.6313	98.5673	5307.2012	307.4114	98.5673	227.6313	454393.5378	679179.6565			215.8320	-0.020000
F-9	4107+36.4303	98.5673	5307.2749	307.3931	98.5673	236.4303	454392.5747	679188.4026			224.6310	-0.020000
BK BRG P2	4107+45.2293	98.5673	5307.3455	307.3455	98.5673	245.2293	454391.6116	679197.1488	99.2710	-6 49 34.63	233.4300	-0.020000
CL P2	4107+46.2393	98.5673	5307.3534		98.5673	246.2393	454391.5010	679198.1527	99.2710	-6 49 34.63	234.4400	-0.020000
AH BRG P2	4107+47.2393	98.5673	5307.3612	307.3612	98.5673	247.2393	454391.3916	679199.1467	99.2710	-6 49 34.63	235.4400	-0.020000
F-1	4107+53.7393	98.5673	5307.4109	307.4460	98.5673	253.7393	454390.6801	679205.6076			241.9400	-0.020000
F-2	4107+60.2393	98.5673	5307.4588	307.5212	98.5673	260.2393	454389.9686	679212.0686			248.4400	-0.020000
F-3	4107+66.7393	98.5673	5307.5051	307.5870	98.5673	266.7393	454389.2572	679218.5295			254.9400	-0.020000
F-4	4107+73.2393	98.5673	5307.5496	307.6432	98.5673	273.2393	454388.5457	679224.9905			261.4400	-0.020000
F-5	4107+79.7393	98.5673	5307.5925	307.6900	98.5673	279.7393	454387.8343	679231.4514			267.9400	-0.020000
F-6	4107+86.2393	98.5673	5307.6336	307.7272	98.5673	286.2393	454387.1228	679237.9124			274.4400	-0.020000
F-7	4107+92.7393	98.5673	5307.6731	307.7550	98.5673	292.7393	454386.4113	679244.3733			280.9400	-0.020000
F-8	4107+99.2393	98.5673	5307.7108	307.7732	98.5673	299.2393	454385.6999	679250.8343			287.4400	-0.020000
F-9	4108+05.7393	98.5673	5307.7469	307.7820	98.5673	305.7393	454384.9884	679257.2952			293.9400	-0.020000
CL BRG EB3	4108+12.2393	98.5673	5307.7812	307.7812	98.5673	312.2393	454384.2769	679263.7562	99.2710	-6 49 34.63	300.4400	-0.020000
BF EB3	4108+13.7493	98.5673	5307.7890		98.5673	313.7493	454384.1116	679265.2571	99.2710	-6 49 34.63	301.9500	-0.020000

GIRDER 35 — PARALLEL TO HORIZONTAL CONTROL — 0.250000 FEET BELOW FINISHED GRADE

BENT LINE	STATION	OFFSET	ELEVATION	ELEV+DL	X	Y	NORTHING	EASTING	BENT LNTH	SKEW	GIRDER LNTH	CRS-SLP
*REF LINE	4105+12.5251	104.6300	5304.3092		104.6300	12.5251	454411.0562	678965.1792	105.3770	-6 49 34.63	0.0000	-0.020000
BF EB1	4106+56.4551	104.6300	5306.3691		104.6300	156.4551	454395.3022	679108.2444	105.3770	-6 49 34.63	143.9300	-0.020000
CL BRG EB1	4106+57.9651	104.6300	5306.3863	306.3863	104.6300	157.9651	454395.1369	679109.7453	105.3770	-6 49 34.63	145.4400	-0.020000
F-1	4106+66.7641	104.6300	5306.4846	306.6028	104.6300	166.7641	454394.1738	679118.4914			154.2390	-0.020000
F-2	4106+75.5631	104.6300	5306.5799	306.7901	104.6300	175.5631	454393.2107	679127.2376			163.0380	-0.020000
F-3	4106+84.3621	104.6300	5306.6721	306.9479	104.6300	184.3621	454392.2476	679135.9837			171.8370	-0.020000
F-4	4106+93.1611	104.6300	5306.7611	307.0763	104.6300	193.1611	454391.2845	679144.7298			180.6360	-0.020000
F-5	4107+01.9601	104.6300	5306.8470	307.1753	104.6300	201.9601	454390.3214	679153.4760			189.4350	-0.020000
F-6	4107+10.7591	104.6300	5306.9298	307.2450	104.6300	210.7591	454389.3583	679162.2221			198.2340	-0.020000
F-7	4107+19.5581	104.6300	5307.0095	307.2854	104.6300	219.5581	454388.3952	679170.9682			207.0330	-0.020000
F-8	4107+28.3571	104.6300	5307.0861	307.2963	104.6300	228.3571	454387.4321	679179.7144			215.8320	-0.020000
F-9	4107+37.1561	104.6300	5307.1596	307.2778	104.6300	237.1561	454386.4690	679188.4605			224.6310	-0.020000
BK BRG P2	4107+45.9551	104.6300	5307.2300	307.2300	104.6300	245.9551	454385.5059	679197.2066	105.3770	-6 49 34.63	233.4300	-0.020000
CL P2	4107+46.9651	104.6300	5307.2378		104.6300	246.9651	454385.3953	679198.2105	105.3770	-6 49 34.63	234.4400	-0.020000
AH BRG P2	4107+47.9651	104.6300	5307.2456	307.2456	104.6300	247.9651	454385.2859	679199.2045	105.3770	-6 49 34.63	235.4400	-0.020000
F-1	4107+54.4651	104.6300	5307.2951	307.3301	104.6300	254.4651	454384.5744	679205.6655			241.9400	-0.020000
F-2	4107+60.9651	104.6300	5307.3428	307.4052	104.6300	260.9651	454383.8629	679212.1264			248.4400	-0.020000
F-3	4107+67.4651	104.6300	5307.3889	307.4708	104.6300	267.4651	454383.1515	679218.5874			254.9400	-0.020000
F-4	4107+73.9651	104.6300	5307.4332	307.5268	104.6300	273.9651	454382.4400	679225.0483			261.4400	-0.020000
F-5	4107+80.4651	104.6300	5307.4759	307.5734	104.6300	280.4651	454381.7285	679231.5093			267.9400	-0.020000
F-6	4107+86.9651	104.6300	5307.5169	307.6104	104.6300	286.9651	454381.0171	679237.9702			274.4400	-0.020000
F-7	4107+93.4651	104.6300	5307.5561	307.6380	104.6300	293.4651	454380.3056	679244.4312			280.9400	-0.020000
F-8	4107+99.9651	104.6300	5307.5937	307.6561	104.6300	299.9651	454379.5941	679250.8921			287.4400	-0.020000
F-9	4108+06.4651	104.6300	5307.6295	307.6646	104.6300	306.4651	454378.8827	679257.3531			293.9400	-0.020000
CL BRG EB3	4108+12.9651	104.6300	5307.6637	307.6637	104.6300	312.9651	454378.1712	679263.8140	105.3770	-6 49 34.63	300.4400	-0.020000
BF EB3	4108+14.4751	104.6300	5307.6714		104.6300	314.4751	454378.0059	679265.3149	105.3770	-6 49 34.63	301.9500	-0.020000

GIRDER 36 — PARALLEL TO HORIZONTAL CONTROL — 0.250000 FEET BELOW FINISHED GRADE

BENT LINE	STATION	OFFSET	ELEVATION	ELEV+DL	X	Y	NORTHING	EASTING	BENT LNTH	SKEW	GIRDER LNTH	CRS-SLP
*REF LINE	4105+13.2508	110.6928	5304.2004		110.6928	13.2508	454404.9504	678965.2369	111.4831	-6 49 34.63	0.0000	-0.020000
BF EB1	4106+57.1808	110.6928	5306.2561		110.6928	157.1808	454389.1964	679108.3021	111.4831	-6 49 34.63	143.9300	-0.020000
CL BRG EB1	4106+58.6908	110.6928	5306.2732	306.2732	110.6928	158.6908	454389.0311	679109.8030	111.4831	-6 49 34.63	145.4400	-0.020000
F-1	4106+67.4898	110.6928	5306.3714	306.4895	110.6928	167.4898	454388.0680	679118.5492			154.2390	-0.020000
F-2	4106+76.2888	110.6928	5306.4664	306.6765	110.6928	176.2888	454387.1049	679127.2953			163.0380	-0.020000
F-3	4106+85.0878	110.6928	5306.5583	306.8341	110.6928	185.0878	454386.1418	679136.0414			171.8370	-0.020000
F-4	4106+93.8868	110.6928	5306.6471	306.9622	110.6928	193.8868	454385.1787	679144.7876			180.6360	-0.020000
F-5	4107+02.6858	110.6928	5306.7327	307.0610	110.6928	202.6858	454384.2156	679153.5337			189.4350	-0.020000
F-6	4107+11.4848	110.6928	5306.8153	307.1305	110.6928	211.4848	454383.2525	679162.2798			198.2340	-0.020000
F-7	4107+20.2838	110.6928	5306.8947	307.1706	110.6928	220.2838	454382.2894	679171.0259			207.0330	-0.020000
F-8	4107+29.0828	110.6928	5306.9711	307.1812	110.6928	229.0828	454381.3263	679179.7721			215.8320	-0.020000
F-9	4107+37.8818	110.6928	5307.0443	307.1624	110.6928	237.8818	454380.3632	679188.5182			224.6310	-0.020000
BK BRG P2	4107+46.6808	110.6928	5307.1144	307.1144	110.6928	246.6808	454379.4001	679197.2643	111.4831	-6 49 34.63	233.4300	-0.020000
CL P2	4107+47.6908	110.6928	5307.1222		110.6928	247.6908	454379.2895	679198.2683	111.4831	-6 49 34.63	234.4400	-0.020000
AH BRG P2	4107+48.6908	110.6928	5307.1300	307.1300	110.6928	248.6908	454379.1801	679199.2623	111.4831	-6 49 34.63	235.4400	-0.020000
F-1	4107+55.1908	110.6928	5307.1792	307.2143	110.6928	255.1908	454378.4686	679205.7232			241.9400	-0.020000
F-2	4107+61.6908	110.6928	5307.2268	307.2892	110.6928	261.6908	454377.7571	679212.1842			248.4400	-0.020000
F-3	4107+68.1908	110.6928	5307.2727	307.3546	110.6928	268.1908	454377.0457	679218.6451			254.9400	-0.020000
F-4	4107+74.6908	110.6928	5307.3168	307.4104	110.6928	274.6908	454376.3342	679225.1061			261.4400	-0.020000
F-5	4107+81.1908	110.6928	5307.3593	307.4568	110.6928	281.1908	454375.6227	679231.5670			267.9400	-0.020000
F-6	4107+87.6908	110.6928	5307.4001	307.4937	110.6928	287.6908	454374.9113	679238.0279			274.4400	-0.020000
F-7	4107+94.1908	110.6928	5307.4391	307.5211	110.6928	294.1908	454374.1998	679244.4889			280.9400	-0.020000
F-8	4108+00.6908	110.6928	5307.4765	307.5389	110.6928	300.6908	454373.4883	679250.9498			287.4400	-0.020000
F-9	4108+07.1908	110.6928	5307.5122	307.5473	110.6928	307.1908	454372.7769	679257.4108			293.9400	-0.020000
CL BRG EB3	4108+13.6908	110.6928	5307.5462	307.5462	110.6928	313.6908	454372.0654	679263.8717	111.4831	-6 49 34.63	300.4400	-0.020000
BF EB3	4108+15.2008	110.6928	5307.5538		110.6928	315.2008	454371.9001	679265.3727	111.4831	-6 49 34.63	301.9500	-0.020000

RIGHT EDGE — PARALLEL TO HORIZONTAL CONTROL — 0.250000 FEET BELOW FINISHED GRADE

BENT LINE	STATION	OFFSET	ELEVATION	ELEV+DL	X	Y	NORTHING	EASTING	BENT LNTH	SKEW	GIRDER LNTH	CRS-SLP
*REF LINE	4105+13.7265	114.6667	5304.1291		114.6667	13.7265	454400.9483	678965.2748	115.4854	-6 49 34.63	0.0000	-0.020000
BF EB1	4106+57.6565	114.6667	5306.1820		114.6667	157.6565	454385.1943	679108.3400	115.4854	-6 49 34.63	143.9300	-0.020000
CL BRG EB1	4106+59.1665	114.6667	5306.1991	306.1991	114.6667	159.1665	454385.0290	679109.8409	115.4854	-6 49 34.63	145.4400	-0.020000
F-1	4106+67.9655	114.6667	5306.2971	306.4153	114.6667	167.9655	454384.0659	679118.5870			154.2390	-0.020000
F-2	4106+76.7645	114.6667	5306.3919	306.6021	114.6667	176.7645	454383.1028	679127.3332			163.0380	-0.020000
F-3	4106+85.5635	114.6667	5306.4837	306.7595	114.6667	185.5635	454382.1397	679136.0793			171.8370	-0.020000
F-4	4106+94.3625	114.6667	5306.5723	306.8875	114.6667	194.3625	454381.1766	679144.8254			180.6360	-0.020000
F-5	4107+03.1615	114.6667	5306.6578	306.9861	114.6667	203.1615	454380.2135	679153.5716			189.4350	-0.020000
F-6	4107+11.9605	114.6667	5306.7402	307.0554	114.6667	211.9605	454379.2504	679162.3177			198.2340	-0.020000
F-7	4107+20.7595	114.6667	5306.8195	307.0953	114.6667	220.7595	454378.2873	679171.0638			207.0330	-0.020000
F-8	4107+29.5585	114.6667	5306.8956	307.1058	114.6667	229.5585	454377.3242	679179.8100			215.8320	-0.020000
F-9	4107+38.3575	114.6667	5306.9687	307.0868	114.6667	238.3575	454376.3611	679188.5561			224.6310	-0.020000
BK BRG P2	4107+47.1565	114.6667	5307.0386	307.0386	114.6667	247.1565	454375.3980	679197.3022	115.4854	-6 49 34.63	233.4300	-0.020000
CL P2	4107+48.1665	114.6667	5307.0464		114.6667	248.1665	454375.2874	679198.3062	115.4854	-6 49 34.63	234.4400	-0.020000
AH BRG P2	4107+49.1665	114.6667	5307.0541	307.0541	114.6667	249.1665	454375.1780	679199.3001	115.4854	-6 49 34.63	235.4400	-0.020000
F-1	4107+55.6665	114.6667	5307.1033	307.1384	114.6667	255.6665	454374.4665	679205.7611			241.9400	-0.020000
F-2	4107+62.1665	114.6667	5307.1507	307.2131	114.6667	262.1665	454373.7550	679212.2220			248.4400	-0.020000
F-3	4107+68.6665	114.6667	5307.1965	307.2784	114.6667	268.6665	454373.0436	679218.6830			254.9400	-0.020000
F-4	4107+75.1665	114.6667	5307.2405	307.3341	114.6667	275.1665	454372.3321	679225.1439			261.4400	-0.020000
F-5	4107+81.6665	114.6667	5307.2829	307.3803	114.6667	281.6665	454371.6206	679231.6049			267.9400	-0.020000
F-6	4107+88.1665	114.6667	5307.3235	307.4171	114.6667	288.1665	454370.9092	679238.0658			274.4400	-0.020000
F-7	4107+94.6665	114.6667	5307.3625	307.4444	114.6667	294.6665	454370.1977	679244.5268			280.9400	-0.020000
F-8	4108+01.1665	114.6667	5307.3997	307.4621	114.6667	301.1665	454369.4862	679250.9877			287.4400	-0.020000
F-9	4108+07.6665	114.6667	5307.4353	307.4703	114.6667	307.6665	454368.7748	679257.4487			293.9400	-0.020000
CL BRG EB3	4108+14.1665	114.6667	5307.4691	307.4691	114.6667	314.1665	454368.0633	679263.9096	115.4854	-6 49 34.63	300.4400	-0.020000
BF EB3	4108+15.6765	114.6667	5307.4767		114.6667	315.6765	454367.8980	679265.4105	115.4854	-6 49 34.63	301.9500	-0.020000

NOTES:
1. ELEVATIONS ARE AT TOP OF CONCRETE DECK 0.2500 FEET BELOW FINISHED GRADE.
2. POSITIVE ROADWAY CROSS SLOPE IS UPWARDS FROM THE PROFILE GRADE LINE.
3. THESE STATIONS, COORDINATES, OFFSETS AND LENGTHS DEFINE THE LAYOUT OF THE STRUCTURE IN A TWO DIMENSIONAL HORIZONTAL PLANE. ELEVATIONS DEFINE THE FINAL GRADE OF THE FINISHED CONCRETE DECK. FABRICATION OF STRUCTURAL COMPONENTS THROUGH THE DIRECT USE OF THIS INFORMATION IS NOT INTENDED OR ADVISABLE.

Design	INITIAL	DATE	Detail	INITIAL	DATE	Quantities	INITIAL	DATE
Designed By	CCH	05/15	Detailed By	MJW	05/15	Quantities By	JWG	05/15
Checked By	MAG	05/15	Checked By	CCH	05/15	Checked By	CCH	05/15

P:\1303354DB - I-70 over Havana DB\19339\Bridge\Drawings\19339BRDG_B139-45-DeckElev.dgn
isaiah.quintana
6/29/2015 6:00:18 PM
DGN MODEL:Border7

Print Date: 6/29/2015
File Name: 19339BRDG_B139-45-DeckElev.dgn
Horiz. Scale: None Vert. Scale: None
Staff Bridge Branch - Unit 0224 AJP

TSIOUVARAS SIMMONS HOLDERNESS

Sheet Revisions		
Date:	Comments	Init.

Colorado Department of Transportation
4670 N. Holly
Denver, CO 80216
Phone: 303-398-6767 FAX: 303-398-6781
Region 1 KK

As Constructed
No Revisions:
Revised:
Void:

I-70 OVER HAVANA STREET DESIGN-BUILD
I-70 BRIDGE OVER HAVANA
BRIDGE DECK ELEVATIONS (7 OF 7)

Designer: J. Garrison
Detailer: M. Welch
Structure Numbers: E-17-VD
Sheet Subset: Bridge 2
Subset Sheets: B45 of 45

Project No./Code
FBR 0704-230
19339
Sheet Number 83

RFC02 JUNE, 2015 (REVIEW)

GENERAL NOTES

All work shall be done in accordance with the Colorado Department of Transportation 2011 Standards for Roadway and Bridge Construction and the contract documents.

Structure excavation and backfill shall be as shown on the plans, except shoring is required for excavation adjacent to the existing roadway.

Expansion joint material shall meet AASHTO Specification M213.

A colored structural concrete coating finish will be required, as shown on the plans, on exposed concrete surfaces. The color shall be as shown on the "Typical Section" sheet, and shall be selected from test panels provided by the Contractor.

Grade 60 reinforcing steel is required.

All reinforcing steel shall be epoxy coated unless otherwise noted.

(N) denotes non coated reinforcing steel.

An emergency deck construction joint may be located at the one quarter span point back from a pier or abutment with respect to the direction of the deck placement.

The following table gives the minimum staggered lap splice length for epoxy coated reinforcing bars placed in accordance with Subsection 602.06. These splice lengths shall be increased by 25% for bars spaced at less than 6" on center or less than 3" lateral cover.

Bar size	#4	#5	#6	#7	#8	#9	#10	#11
Splice length for Class D Concrete	1'-3"	1'-7"	2'-5"	2'-10"	3'-8"	4'-8"	5'-11"	7'-3"

When the Contractor elects to substitute epoxy coated reinforcement for black reinforcing bars, the minimum lap splice shall be as described above.

The following table gives the minimum staggered lap splice length for black reinforcing bars placed in accordance with Subsection 602.06. These splice lengths shall be increased by 25% for bars spaced at less than 6" on center or less than 3" lateral cover.

Bar size	#4	#5	#6	#7	#8	#9	#10	#11
Splice length for Class D Concrete	1'-1"	1'-4"	1'-7"	1'-11"	2'-6"	3'-1"	3'-11"	4'-10"

The above splice lengths shall be increased by 20 percent for 3 bar bundles and 33 percent for 4 bar bundles.

The Contractor shall be responsible for the stability of the structure during construction.

Permanent deck forms are not allowed.

For structure number installation, see Standard S-614-12.

Stations, elevations, and dimensions contained in these plans are calculated from a recent field survey. The Contractor shall verify all dependent dimensions in the field before ordering or fabricating any material.

All longitudinal and transverse dimensions are measured horizontally and include no correction for grade.

The information shown on these plans concerning the type and location of underground utilities is not guaranteed to be accurate or all inclusive. The Contractor is responsible for making his own determination as to the type and location of underground utilities as may be necessary to avoid damage thereto. The Contractor shall contact the Utility Notification Center of Colorado at 811 (1-800-922-1987) at least 3 days (2 days not including the day of notification) prior to any excavation or other earthwork.

Call the following number at least 48 hours prior to commencing work to determine location of fiber optic: UPRR "Call Before You Dig", 1-800-336-9193.

Coal tar epoxy coating for piling shall be Carboline Bitumastic 300M or Sherwin Williams Targuard Coal Tar Epoxy. Application of coal tar epoxy shall comply with manufacturer's recommendations.

For Engineering Geology, refer to "Engineering Geology" sheets in subset "Bridge 1" ("I-70 BRIDGE OVER HAVANA").

DESIGN DATA

AASHTO, Sixth Edition LRFD, with Interims through 2013

Design method: Load and Resistance Factor Design

Live load: HL-93 (design truck or tandem, and design lane load)
Dead load: assumes 36 lbs. per sq. ft. for bridge deck overlay
bridge rail allowance is 500 lbs. per linear ft. per side

Reinforced concrete:
Class D Concrete: f'c = 4,500 psi
Reinforcing steel: fy = 60,000 psi
Sulfate exposure: Class 0

Steel sheet piling:
ASTM A-588
fy = 50,000 psi

SEISMIC DESIGN CRITERIA

Earthquake Design method: AASHTO Load and Resistance Factor Design
Latitude = 39.775810
Longitude = -104.866777

AASHTO Spectrum for 7% PE in 75 years (1000yr Return Period)

Period (sec)	Sa (g)
0.0	0.056 PGA - Site Class B
0.2	0.120 Ss - Site Class B
1.0	0.033 S1 - Site Class B

Spectral Response Accelerations:
As = Fpga*PGA, SDs = Fa*Ss, and SD1 = Fv*S1
Fpga = 1.6, Fa = 1.6, Fv = 2.4

Period (sec)	Sa (g)
0.0	0.089 As - Site Class D
0.2	0.192 SDs - Site Class D
1.0	0.079 SD1 - Site Class D

Operational Class: Essential

Seismic Zone or Seismic Design Category: Zone= 1

BRIDGE DESCRIPTION

Single span (40'-0") bridge
cast-in-place concrete slab on steel sheet piling
over future UPRR Arsenal Industrial Lead Track
214'-4" roadway width curb to curb
variable skew
1'-6" Bridge Rail Type 7 (Special) and
Guardrail Type 7 Style CA

ABBREVIATIONS

ABC = Aggregate Base Course
Ah. = ahead
Abut. = abutment
Approx. = approximately
B.F. = back face
Bk. = back
Bot. = bottom
Brg. = bearing
CIP = cast-in-place
℄ = center line
Clr. = clear
Const. = construction
Cont. = continuous
Dwg. = drawing
EB = East bound
E.F. = each face
Elev. = elevation
Embed. = embedment
Eq. = equally
Est. = estimated
Exist. = existing
Exp. = expansion
F.F. = far face
Galv. = galvanized
HCL = horizontal control line
HMA = hot mix asphalt
JCT = junction
Jt. = joint
Lt. = left
Max. = maximum
Min. = minimum
MSB = mechanically stabilized backfill
MSE = mechanically stabilized earth
NB = Northbound
N.F. = near face
No. = number
Nom. = nominal
O.C. = on center
P.C. = point of curve
PGL = profile grade line
PL = plate
Proj. = projection
RCP = reinforced concrete pipe
Req'd. = required
R.O.W. = right of way
Rt. = right
SB = Southbound
Sch. = schedule
Shld. = shoulder
Spa. = spaced
Sta. = station
Std. = standard
Str. = structure
Symm. = symmetrical
Tot. = Total
typ. = typical
UPRR = Union Pacific Railroad
VC = vertical curve
VPC = vertical point of curvature
VPI = vertical point of intersection
VPT = vertical point of tangency
WB = West bound
Yr. = year

INDEX OF DRAWINGS

B1 GENERAL INFORMATION
B2 SUMMARY OF QUANTITIES
B3 GENERAL LAYOUT (1 OF 2)
B4 GENERAL LAYOUT (2 OF 2)
B5 PHASING PLAN
B6 PHASING SECTIONS
B7 CONSTRUCTION LAYOUT
B8 FOUNDATION LAYOUT
B9 VERTICAL CORNER COPING DETAILS (1 OF 2)
B10 VERTICAL CORNER COPING DETAILS (2 OF 2)
B11 SLAB REINFORCING PLAN
B12 SLAB REINFORCING DETAILS (1 OF 2)
B13 SLAB REINFORCING DETAILS (2 OF 2)
B14 BRIDGE RAIL TYPE 7 (SPECIAL) (1 OF 2)
B15 BRIDGE RAIL TYPE 7 (SPECIAL) (2 OF 2)

SHEET PILING CORROSION PROTECTION NOTES

Sheet piling shall be ASTM A-588 weathering steel.

The following surfaces of the sheet piling shall be coated with coal tar epoxy:

Back face of abutment wall - from top of piling to 5 feet below railroad ground line.

LEGEND

XX / BXX — Section or Detail identification; Cross reference drawing number (if blank, reference is to same sheet)

1 — Denotes keynote reference

Know what's below. Call before you dig.

RFC02 JUNE, 2015 (REVIEW)

Design			Detail			Quantities		
	INITIAL	DATE		INITIAL	DATE		INITIAL	DATE
Designed By	MAG	05/15	Detailed By	MJW	05/15	Quantities By	JWG	05/15
Checked By	JWS	05/15	Checked By	MAG	05/15	Checked By	MAG	05/15

isaiah.quintana
6/29/2015 6:00:20 PM
DGN MODEL:sheet
P:\1303354DB - I-70 over Havana DB\19339\Bridge\Drawings\19339BRDG_B201-GenInfo.dgn

Print Date: 6/29/2015
File Name: 19339BRDG_B201-GenInfo.dgn
Horiz. Scale: None Vert. Scale: None
Staff Bridge Branch - Unit 0224 AJP

LAWRENCE — TSIOUVARAS SIMMONS HOLDERNESS

Sheet Revisions		
Date:	Comments	Init.

Colorado Department of Transportation
4670 N. Holly
Denver, CO 80216
Phone: 303-398-6767 FAX: 303-398-6781
Region 1 KK

As Constructed
No Revisions:
Revised:
Void:

I-70 OVER HAVANA STREET DESIGN-BUILD
I-70 BRIDGE OVER FUTURE UPRR SPUR
GENERAL INFORMATION

Designer: C. Hammond | Structure Numbers: E-17-VE
Detailer: M. Welch
Sheet Subset: Bridge 2 | Subset Sheets: B1 of 15
Near: Denver Sec. 22 Township T3S Range R67W

Project No./Code
FBR 0704-230
19339
Sheet Number 84
Station 4104+54.44 to Station 4104+94.44

SUMMARY OF QUANTITIES

ITEM NO.	DESCRIPTION	UNIT	SUPER-STRUCTURE	ABUTMENT 1	ABUTMENT 2	TOTAL
501-00200	STEEL SHEET PILING (TYPE II)	SF		12,622	12,622	25,244
515-00120	WATERPROOFING (MEMBRANE)	SY	1048			1048
601-03040	CONCRETE CLASS D (BRIDGE)	CY	896	14	14	924
601-40400	STRUCTURAL CONCRETE STAIN	SY	87	30	30	147
602-00020	REINFORCING STEEL (EPOXY COATED)	LB	144,281	1,024	1,024	146,329
606-10705	BRIDGE RAIL TYPE 7 (SPECIAL)	LF	114			114
613-00200	2 INCH ELECTRICAL CONDUIT	LF	268			268

Design	INITIAL	DATE	Detail	INITIAL	DATE	Quantities	INITIAL	DATE
Designed By	MAG	05/15	Detailed By	MJW	05/15	Quantities By	JWG	05/15
Checked By	JWS	05/15	Checked By	MAG	05/15	Checked By	MAG	05/15

P:\1303354DB - I-70 over Havana DB\19339\Bridge\Drawings\19339BRDG_B202-SummQuan.dgn
DGN MODEL:sheet
6/29/2015 6:00:22 PM
isaiah.quintana

Print Date: 6/29/2015
File Name: 19339BRDG_B202-SummQuan.dgn
Horiz. Scale: None Vert. Scale: None
Staff Bridge Branch - Unit 0224 AJP

TSIOUVARAS SIMMONS HOLDERNESS

Sheet Revisions		
Date:	Comments	Init.

Colorado Department of Transportation
4670 N. Holly
Denver, CO 80216
Phone: 303-398-6767 FAX: 303-398-6781
Region 1 KK

As Constructed
No Revisions:
Revised:
Void:

I-70 OVER HAVANA STREET DESIGN-BUILD
I-70 BRIDGE OVER FUTURE UPRR SPUR
SUMMARY OF QUANTITIES

Designer: M. Gilbert
Detailer: M. Welch
Sheet Subset: Bridge 2
Structure Numbers: E-17-VE
Subset Sheets: B2 of 15

Project No./Code
FBR 0704-230
19339
Sheet Number 85

RFC02 JUNE, 2015 (REVIEW)

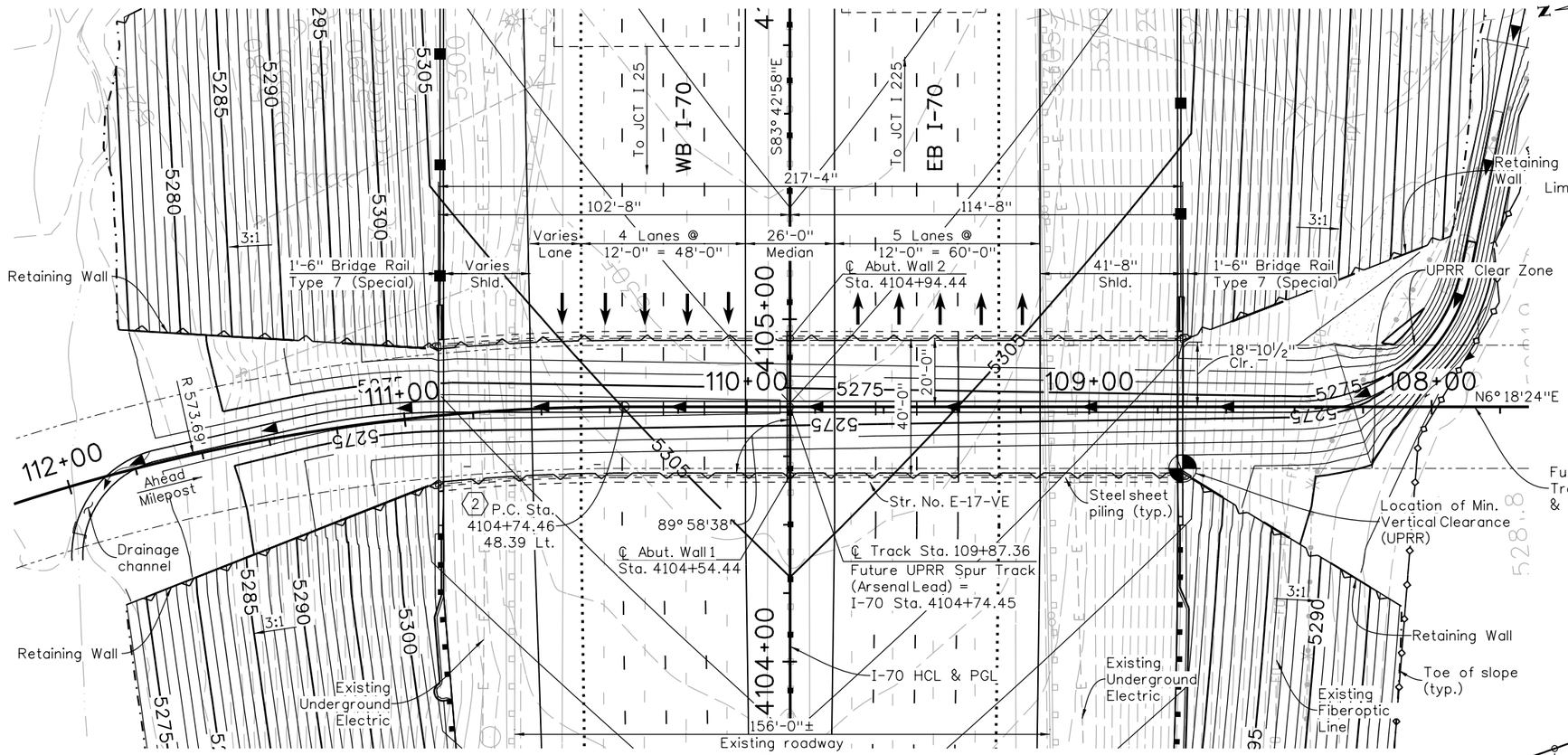

PLAN

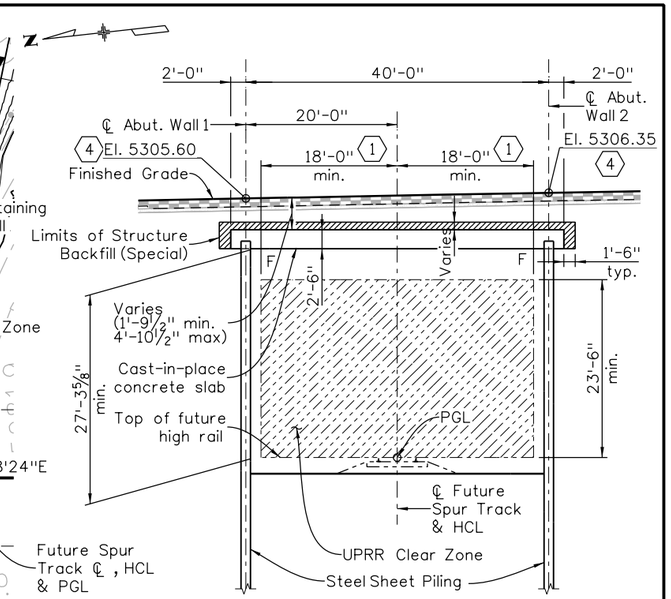

TYPICAL SECTION

(Looking North)
(Taken normal to ℄ Future Spur Track, except as noted)

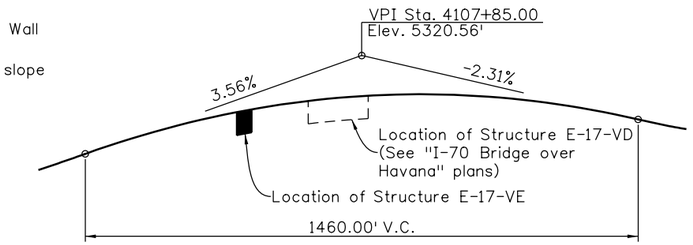

PROFILE GRADE - I-70 HCL

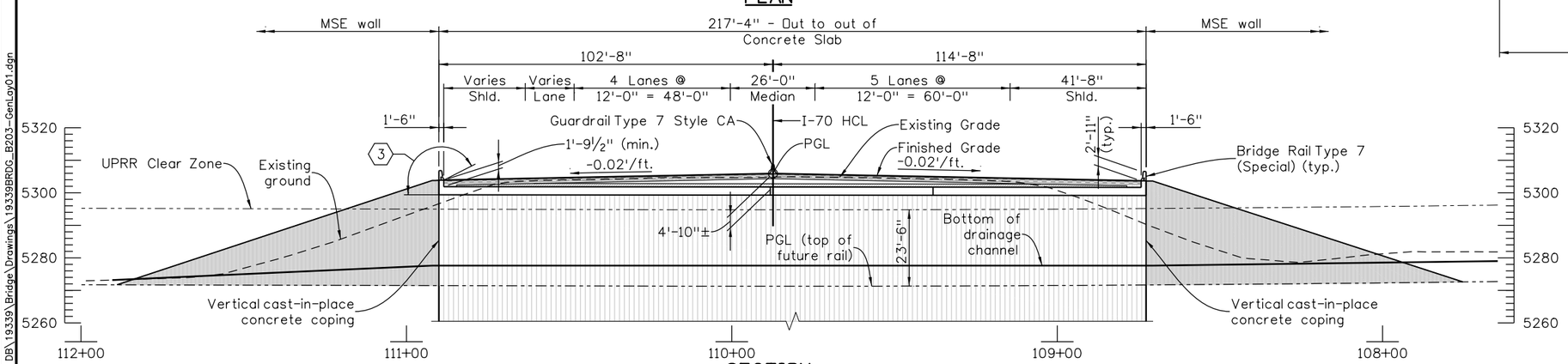

SECTION

(Looking Ahead Station on I-70 HCL)
(Taken normal to I-70 HCL, except as noted)

KEY NOTES

1. Measured normal to ℄ Future Spur Track.
2. Stations and offsets shown are taken from I-70 HCL.
3. Limits of structural concrete coating - Federal Standard 595B Color Number 33531 - Light Beige.
4. Elevations given are at I-70 HCL

Design	INITIAL	DATE	Detail	INITIAL	DATE	Quantities	INITIAL	DATE
Designed By	MAG	05/15	Detailed By	MJW	05/15	Quantities By	JWG	05/15
Checked By	JWS	05/15	Checked By	MAG	05/15	Checked By	MAG	05/15

isaiah.quintana
6/29/2015 6:00:25 PM
DGN MODEL:sheet
P:\130354DB - I-70 over Havana DB\19339\Bridge\Drawings\19339BRDG_B203-GenLay01.dgn

RFC02 JUNE, 2015 (REVIEW)

Print Date: 6/29/2015
File Name: 19339BRDG_B203-GenLay01.dgn
Horiz. Scale: None Vert. Scale: None
Staff Bridge Branch - Unit 0224 AJP

TSIOUVARAS SIMMONS HOLDERNESS

Sheet Revisions		
Date:	Comments	Init.

Colorado Department of Transportation
4670 N. Holly
Denver, CO 80216
Phone: 303-398-6767 FAX: 303-398-6781
Region 1 KK

As Constructed
No Revisions:
Revised:
Void:

I-70 OVER HAVANA STREET DESIGN-BUILD
I-70 BRIDGE OVER FUTURE UPRR SPUR
GENERAL LAYOUT (1 OF 2)

Designer: C. Hammond
Detailer: A. Pelster
Structure Numbers: E-17-VE
Sheet Subset: Bridge 2
Subset Sheets: B3 of 15

Project No./Code
FBR 0704-230
19339
Sheet Number 86

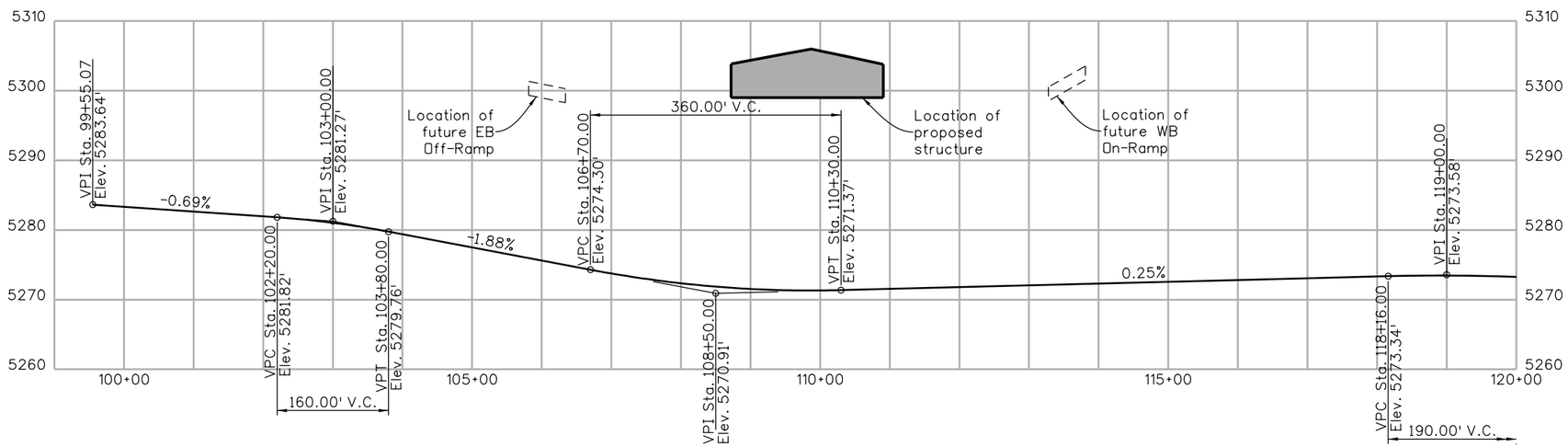

PROFILE GRADE - FUTURE UPRR SPUR TRACK

Design			Detail			Quantities		
	INITIAL	DATE		INITIAL	DATE		INITIAL	DATE
Designed By	MAG	05/15	Detailed By	MJW	05/15	Quantities By	JWG	05/15
Checked By	JWS	05/15	Checked By	MAG	05/15	Checked By	MAG	05/15

P:\130354DB - I-70 over Havana DB\19339\Bridge\Drawings\19339BRDG_B204-GenLay02.dgn
isaiah.quintana
6/29/2015 6:00:26 PM
DGN MODEL:sheet

RFC02 JUNE, 2015 (REVIEW)

Print Date: 6/29/2015
File Name: 19339BRDG_B204-GenLay02.dgn
Horiz. Scale: None Vert. Scale: None
Staff Bridge Branch - Unit 0224 AJP

TSIOUVARAS SIMMONS HOLDERNESS

Sheet Revisions		
Date:	Comments	Init.

Colorado Department of Transportation
4670 N. Holly
Denver, CO 80216
Phone: 303-398-6767 FAX: 303-398-6781
Region 1 KK

As Constructed
No Revisions:
Revised:
Void:

I-70 OVER HAVANA STREET DESIGN-BUILD
I-70 BRIDGE OVER FUTURE UPRR SPUR
GENERAL LAYOUT (2 OF 2)

Designer: C. Hammond
Detailer: M. Welch
Sheet Subset: Bridge 2
Structure Numbers: E-17-VE
Subset Sheets: B4 of 15

Project No./Code
FBR 0704-230
19339
Sheet Number 87

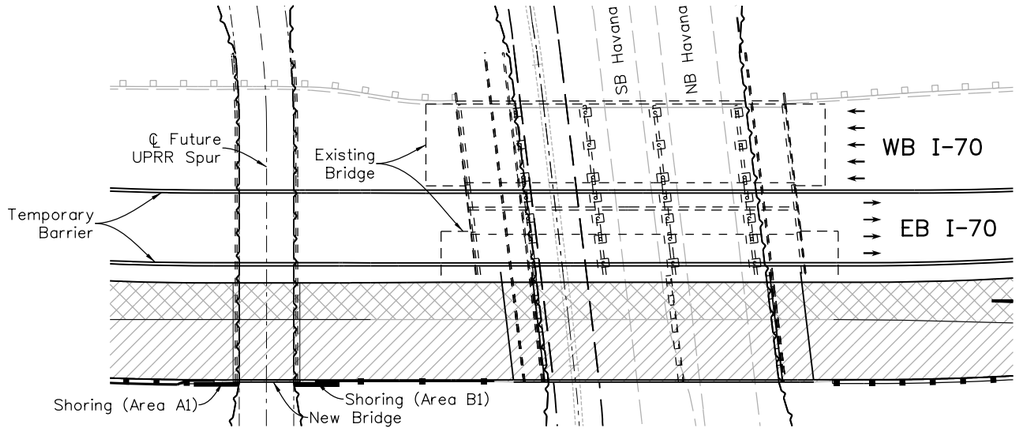

PHASE 1

Install Shoring Areas A1 and B1.

Shift I-70 traffic north.

Construct Phase 1 portion of new bridge and southern MSE portions of walls A and B. Exclude top lift of asphalt pavement.

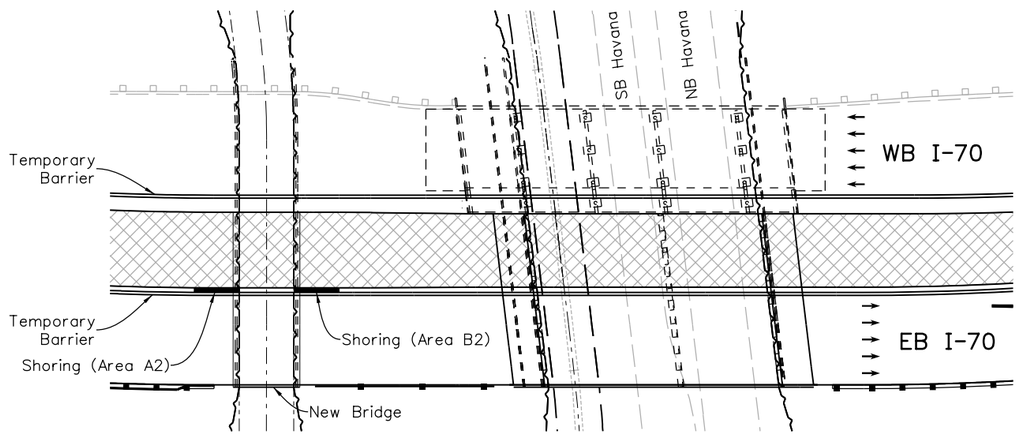

PHASE 2

Install Shoring Areas A2 and B2.

Shift EB I-70 traffic to phase 1 portion of new bridge. Maintain WB I-70 traffic as configured in Phase 1.

Construct Phase 2 portion of new bridge. Exclude top lift of asphalt pavement.

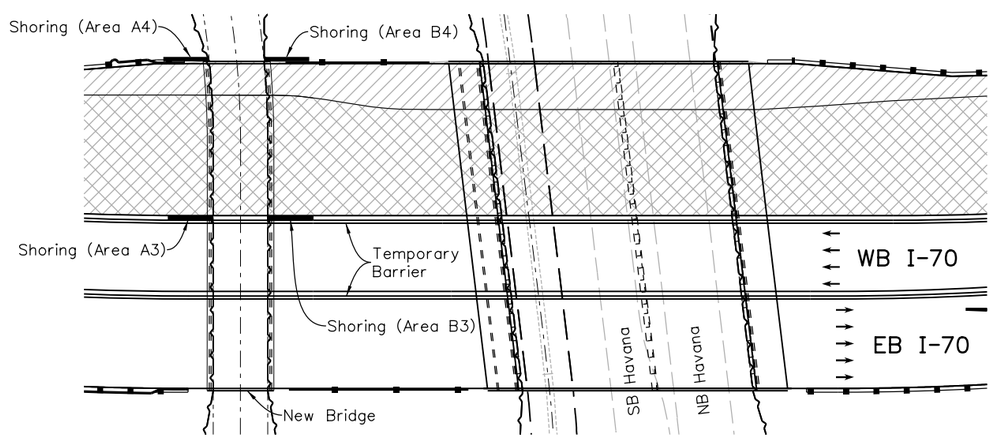

PHASE 3

Install Shoring Areas A3 and B3.

Shift WB I-70 traffic to Phase 2 portion of new bridge.

Install Shoring Areas A4 and B4.

Construct Phase 3 portion of new bridge and northern MSE portions of walls A and B. Exclude top lift of asphalt pavement.

PHASE 4 (NOT SHOWN)

Excavate below bridge and remove rat slab.

Place final lift of asphalt pavement.

Install permanent striping and median barrier in permanent location.

LEGEND

Construction/Grading

Removal/Demolition

NOTES

1. Additional periods of temporary lane closures and other traffic control will be required during construction operations in each phase.
2. Shoring Areas A1 & B1 and Areas A4 & B4 consist of shoring necessary to retain existing embankment during the construction of the MSE portions of Walls A & B.
3. Shoring Areas A2 & B2 and Areas A3 & B3 consist of shoring necessary to retain existing embankment during construction operations.
4. Shoring shown in these plans is schematic and may not represent actual location or extents. Additional shoring may be required during demolition and construction operations.
5. Remove temporary shoring to 2'-0" below subgrade.
6. For additional bridge phasing information, see "Phasing Sections" sheet.
7. For additional project phasing information, see Construction Traffic Control subset.

RFC02 JUNE, 2015 (REVIEW)

Design			Detail			Quantities		
	INITIAL	DATE		INITIAL	DATE		INITIAL	DATE
Designed By	MAG	05/15	Detailed By	MJW	05/15	Quantities By	JWG	05/15
Checked By	JWS	05/15	Checked By	MAG	05/15	Checked By	MAG	05/15

Havana DB\19339\Bridge\Drawings\19339BRDG_B205-PhasPlan.dgn

isaiah.quintana
6/29/2015 6:00:28 PM
DGN MODEL:sheet
P:\1303354DB - I-70 over

Print Date: 6/29/2015
File Name: 19339BRDG_B205-PhasPlan.dgn
Horiz. Scale: None Vert. Scale: None
Staff Bridge Branch - Unit 0224 AJP

TSIOUVARAS SIMMONS HOLDERNESS

Sheet Revisions		
Date:	Comments	Init.

Colorado Department of Transportation
4670 N. Holly
Denver, CO 80216
Phone: 303-398-6767 FAX: 303-398-6781
Region 1 KK

As Constructed
No Revisions:
Revised:
Void:

I-70 OVER HAVANA STREET DESIGN-BUILD
I-70 BRIDGE OVER FUTURE UPRR SPUR
PHASING PLAN

Designer: M. Gilbert
Detailer: M. Welch
Sheet Subset: Bridge 2
Structure Numbers: E-17-VE
Subset Sheets: B5 of 15

Project No./Code
FBR 0704-230
19339
Sheet Number 88

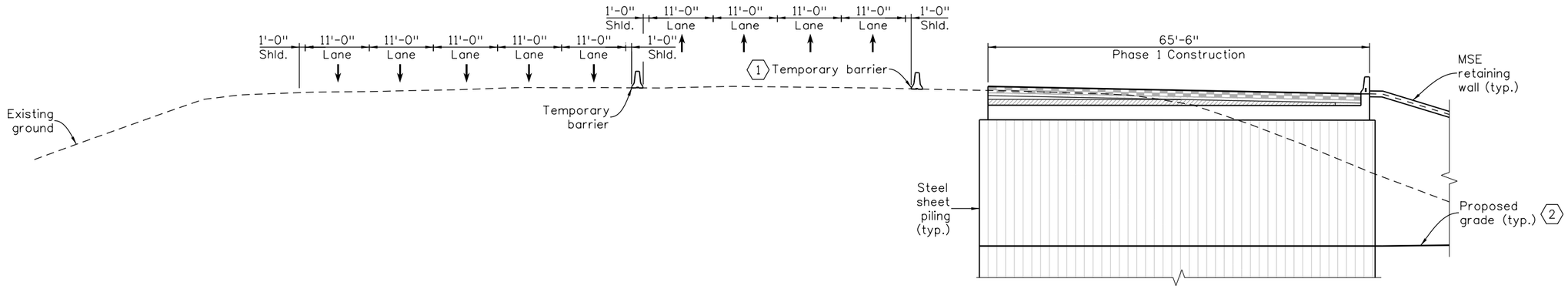

PHASE 1

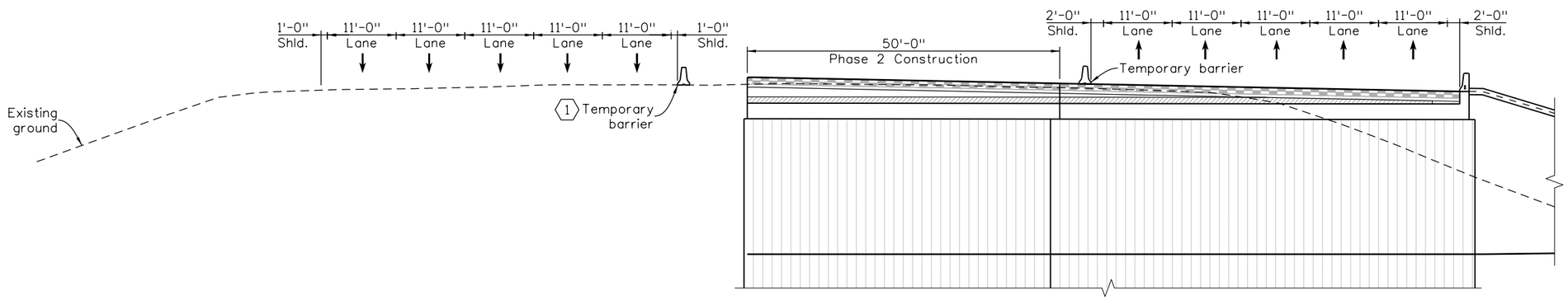

PHASE 2

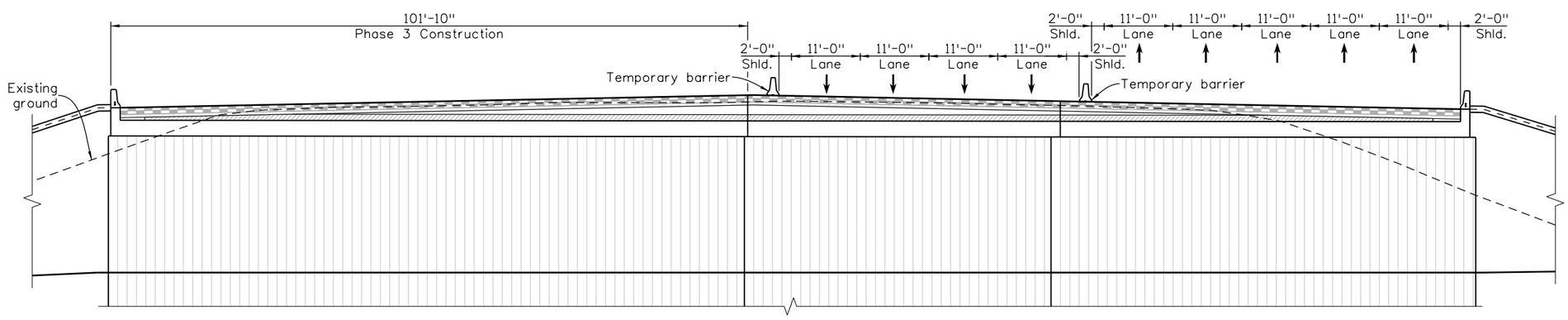

PHASE 3

NOTES

1. Looking East. Abutment 2 shown, Abutment 1 similar, opposite hand.

KEY NOTES

1. Temporary barrier for phasing may require pinning to subgrade depending on the location of temporary shoring and excavations necessary to construct Phase 1 and Phase 2.
2. See "Slab Reinforcing Details (2 of 2)" for sequencing of excavation to proposed grade.

RFC02 JUNE, 2015 (REVIEW)

Design	INITIAL	DATE	Detail	INITIAL	DATE	Quantities	INITIAL	DATE
Designed By	MAG	05/15	Detailed By	MJW	05/15	Quantities By	JWG	05/15
Checked By	JWS	05/15	Checked By	MAG	05/15	Checked By	MAG	05/15

P:\130335408 - I-70 over Havana DB\19339\Bridge\Drawings\19339BRDG_B206-PhasSect.dgn
isaiah.quintana
6/29/2015 6:00:30 PM
DGN MODEL:sheet

Print Date: 6/29/2015
File Name: 19339BRDG_B206-PhasSect.dgn
Horiz. Scale: None Vert. Scale: None
Staff Bridge Branch - Unit 0224 AJP

TSIOUVARAS SIMMONS HOLDERNESS

Sheet Revisions		
Date:	Comments	Init.

Colorado Department of Transportation
4670 N. Holly
Denver, CO 80216
Phone: 303-398-6767 FAX: 303-398-6781
Region 1 KK

As Constructed
No Revisions:
Revised:
Void:

I-70 OVER HAVANA STREET DESIGN-BUILD
I-70 BRIDGE OVER FUTURE UPRR SPUR
PHASING SECTIONS

Designer: M. Gilbert
Detailer: M. Welch
Sheet Subset: Bridge 2
Structure Numbers: E-17-VE
Subset Sheets: B6 of 15

Project No./Code
FBR 0704-230
19339
Sheet Number 89

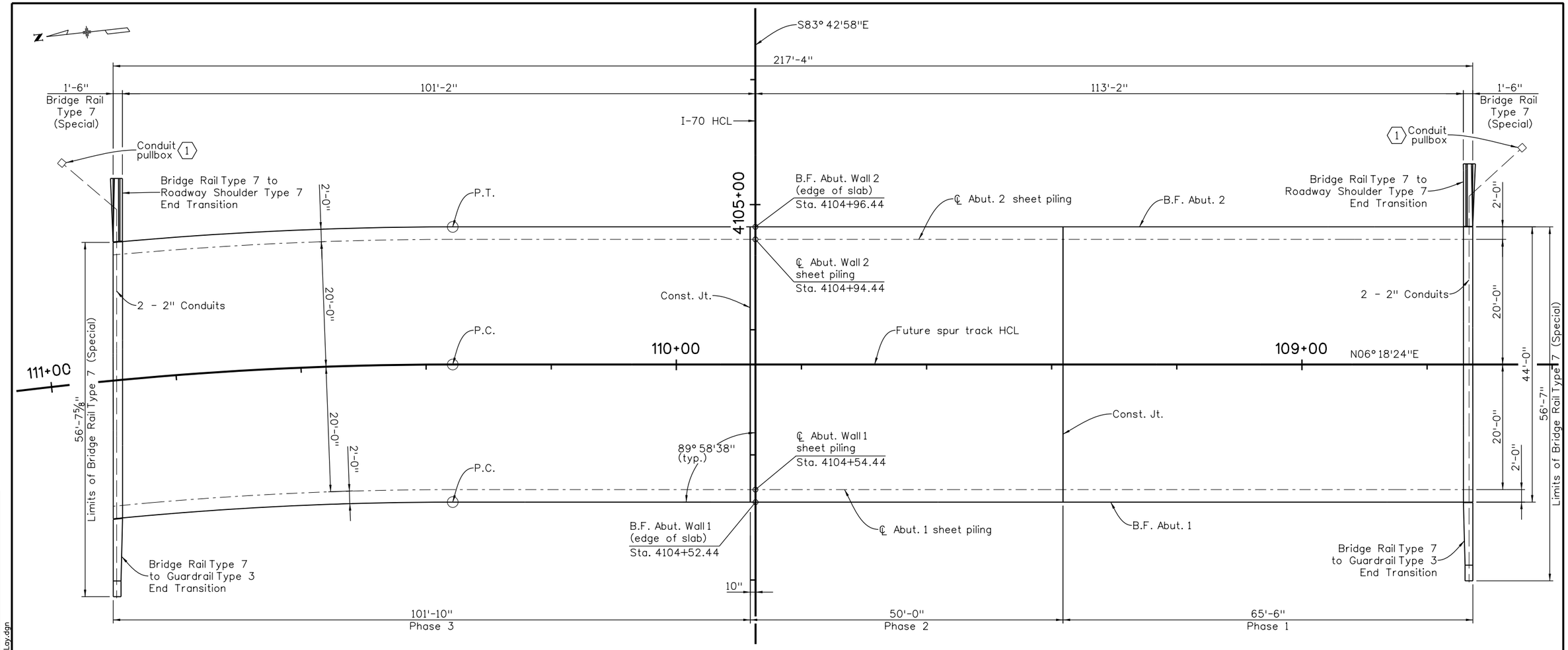

CONSTRUCTION LAYOUT

KEY NOTES

1. Extend buried conduit 5 feet beyond back face of abutment at Type 7 End Transitions and transition out of barrier as shown. Provide a nominal 17"x30"x24" deep precast polymer concrete pullbox at each end. Pullboxes shall have a minimum design load of 20 kips. Locate pullboxes behind guardrail. Contractor to determine final location of pullboxes and identify locations in the as-built plans. Provide expansion/deflection couplers, capable of ¾" minimum axial expansion/contraction, at each ½" expansion joint.

Design	INITIAL	DATE	Detail	INITIAL	DATE	Quantities	INITIAL	DATE
Designed By	MAG	05/15	Detailed By	MJW	05/15	Quantities By	JWG	05/15
Checked By	JWS	05/15	Checked By	MAG	05/15	Checked By	MAG	05/15

P:\130335400B - I-70 over Havana DB\19339\Bridge\Drawings\19339BRDG_B207-ConstLay.dgn
isaiah.quintana
6/29/2015 6:00:32 PM
DGN MODEL:sheet

Print Date: 6/29/2015
File Name: 19339BRDG_B207-ConstLay.dgn
Horiz. Scale: None Vert. Scale: None
Staff Bridge Branch - Unit 0224 AJP

TSIOUVARAS SIMMONS HOLDERNESS

Sheet Revisions		
Date:	Comments	Init.

Colorado Department of Transportation
4670 N. Holly
Denver, CO 80216
Phone: 303-398-6767 FAX: 303-398-6781
Region 1 KK

As Constructed
No Revisions:
Revised:
Void:

I-70 OVER HAVANA STREET DESIGN-BUILD
I-70 BRIDGE OVER FUTURE UPRR SPUR
CONSTRUCTION LAYOUT

Designer: M. Gilbert
Detailer: M. Welch
Structure Numbers: E-17-VE
Sheet Subset: Bridge 2
Subset Sheets: B7 of 15

Project No./Code
FBR 0704-230
19339
Sheet Number 90

RFC02 JUNE, 2015 (REVIEW)

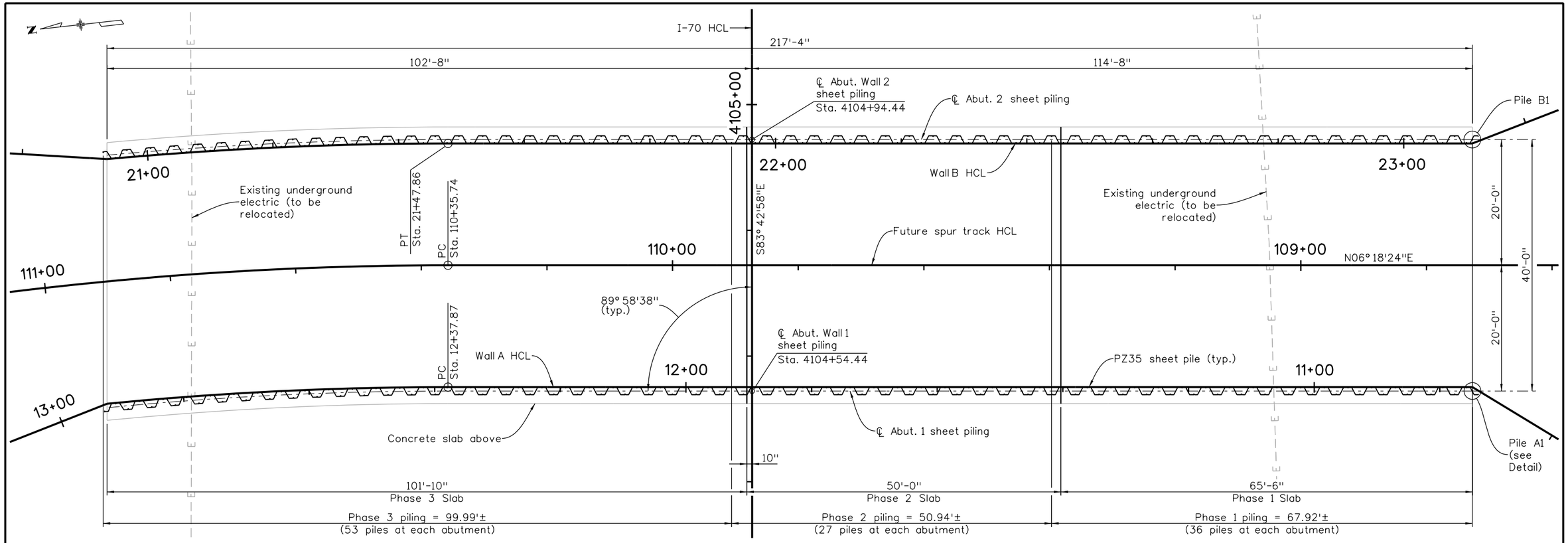

FOUNDATION LAYOUT

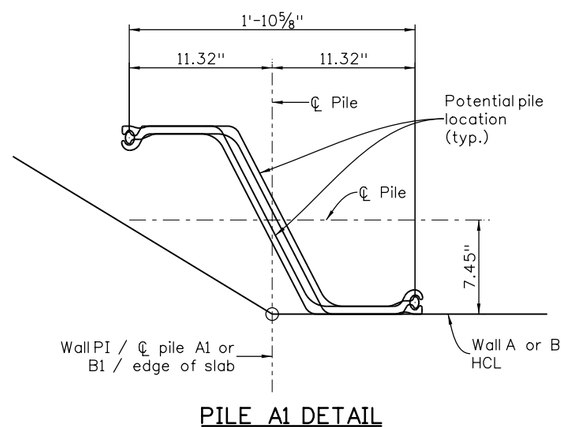

PILE A1 DETAIL

(Pile B1 similar, opposite hand)

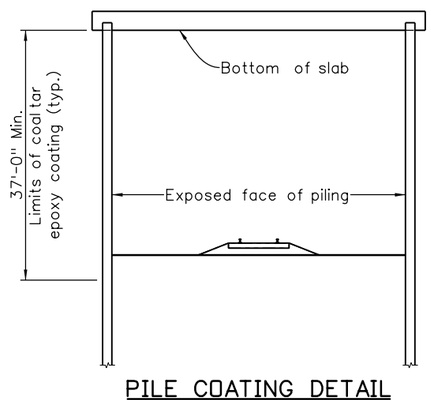

PILE COATING DETAIL

NOTES

1. Place ℄ Piles A1 and B1 as shown. Place sequential piling along wall HCL with ℄ offset as shown on "Pile A1 Detail," this sheet.

		I-70 HCL	Wall A/B HCL
Pile A1	Station	4104+54.40	10+74.81
	Offset	114.67' Rt.	0.62' Lt.
Pile B1	Station	4104+94.40	23+10.91
	Offset	114.67' Rt.	0.62' Lt.

2. For additional information on Wall A HCL and Wall B HCL, see sheet "WALL GEOMETRY PLAN" in Retaining Wall Plans subset.

PILING DATA

LOCATION	PILE SIZE	EST. TIP ELEV.	PILE CUT OFF ELEV.	FACTORED MAXIMUM LOAD (TONS)	MINIMUM PILE LENGTH (FEET)
Abutments 1 & 2	PZ35	5242.3	5300	31	57.70

RFC02 JUNE, 2015 (REVIEW)

Design	INITIAL	DATE	Detail	INITIAL	DATE	Quantities	INITIAL	DATE
Designed By	MAG	05/15	Detailed By	MJW	05/15	Quantities By	JWG	05/15
Checked By	JWS	05/15	Checked By	MAG	05/15	Checked By	MAG	05/15

P:\1303354DB - I-70 over Havana DB\19339\Bridge\Drawings\19339BRDG_B208-FoundLay.dgn
isaiah.quintana
6/29/2015 6:00:35 PM
DGN MODEL:sheet

Print Date: 6/29/2015
File Name: 19339BRDG_B208-FoundLay.dgn
Horiz. Scale: None Vert. Scale: None
Staff Bridge Branch - Unit 0224 AJP

TSIOUVARAS SIMMONS HOLDERNESS

Sheet Revisions		
Date:	Comments	Init.

Colorado Department of Transportation
4670 N. Holly
Denver, CO 80216
Phone: 303-398-6767 FAX: 303-398-6781
Region 1 KK

As Constructed
No Revisions:
Revised:
Void:

I-70 OVER HAVANA STREET DESIGN-BUILD
I-70 BRIDGE OVER FUTURE UPRR SPUR
FOUNDATION LAYOUT

Designer: M. Gilbert
Detailer: M. Welch
Sheet Subset: Bridge 2
Structure Numbers: E-17-VE
Subset Sheets: B8 of 15

Project No./Code
FBR 0704-230
19339
Sheet Number 91

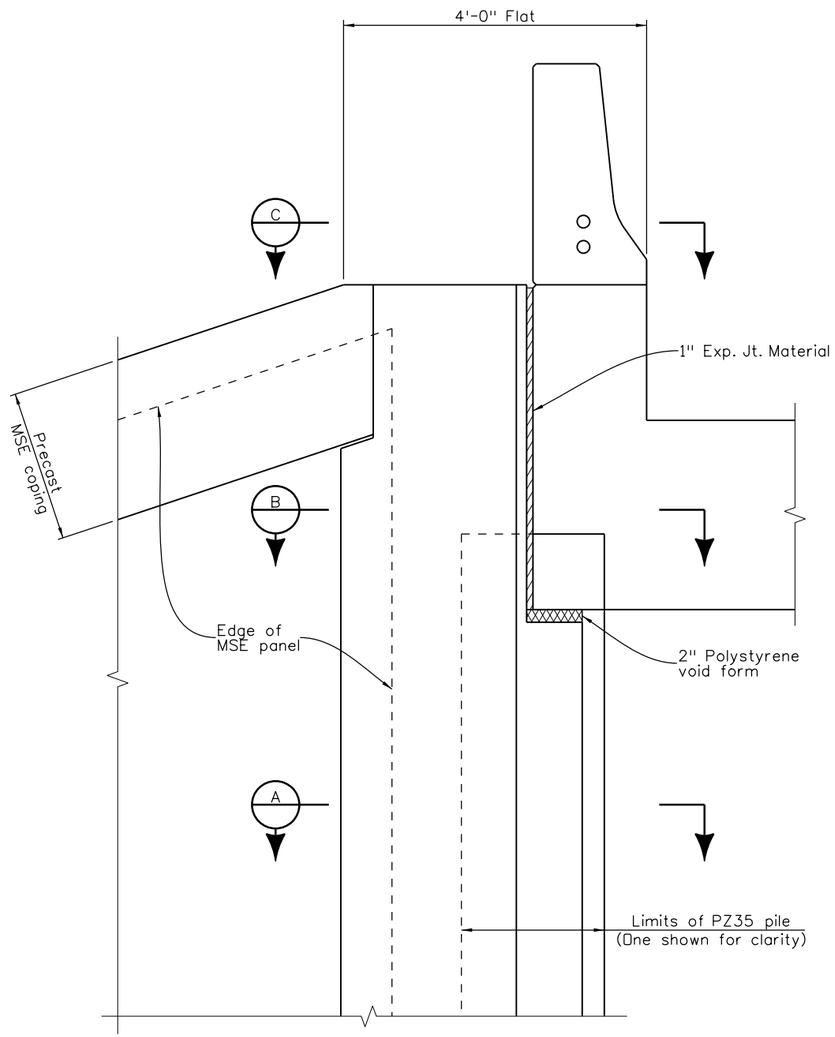

ELEVATION

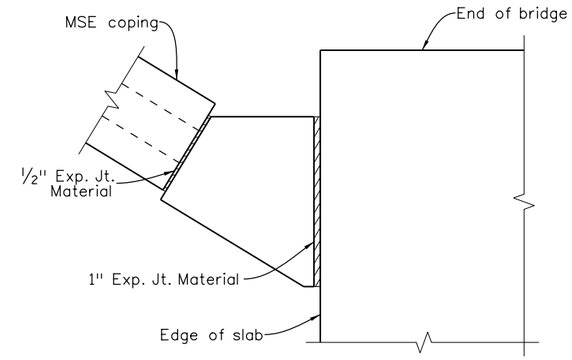

SECTION C

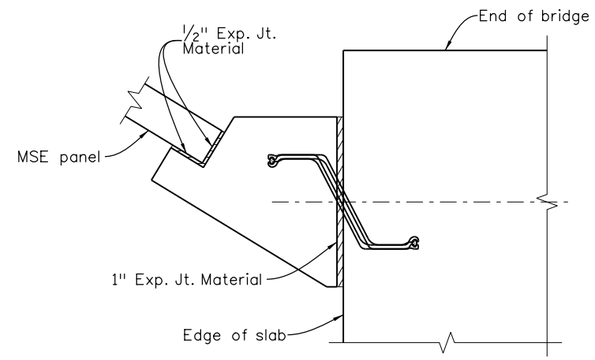

SECTION B

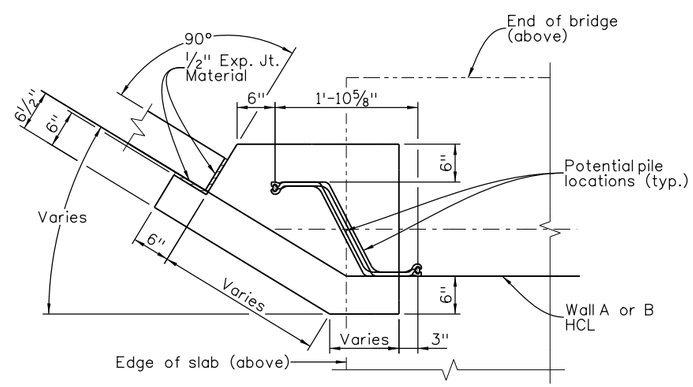

SECTION A

NOTES

1. For reinforcing, see "Vertical Corner Coping Details (2 of 2)" sheet.
2. Vertical coping at south end of Wall A shown, all other locations are similar.

Design			Detail			Quantities		
	INITIAL	DATE		INITIAL	DATE		INITIAL	DATE
Designed By	MAG	05/15	Detailed By	MJW	05/15	Quantities By	JWG	05/15
Checked By	JWS	05/15	Checked By	MAG	05/15	Checked By	MAG	05/15

P:\1303354DB - I-70 over Havana DB\19339\Bridge\Drawings\19339BRDG_B209-10-VertCorCopingDet.dgn
DGN MODEL:sheet1
6/29/2015 6:00:37 PM
isaiah.quintana

Print Date: 6/29/2015
File Name: 19339BRDG_B209-10-VertCorCopingDet.dgn
Horiz. Scale: None Vert. Scale: None
Staff Bridge Branch - Unit 0224 AJP

TSIOUVARAS SIMMONS HOLDERNESS

Sheet Revisions		
Date:	Comments	Init.

Colorado Department of Transportation
4670 N. Holly
Denver, CO 80216
Phone: 303-398-6767 FAX: 303-398-6781
Region 1 KK

As Constructed
No Revisions:
Revised:
Void:

I-70 OVER HAVANA STREET DESIGN-BUILD
I-70 BRIDGE OVER FUTURE UPRR SPUR
VERTICAL CORNER COPING DETAILS (1 of 2)

Designer: M. Gilbert
Detailer: M. Welch
Sheet Subset: Bridge 2
Structure Numbers: E-17-VE
Subset Sheets: B9 of 15

Project No./Code
FBR 0704-230
19339
Sheet Number 92

RFC02 JUNE, 2015 (REVIEW)

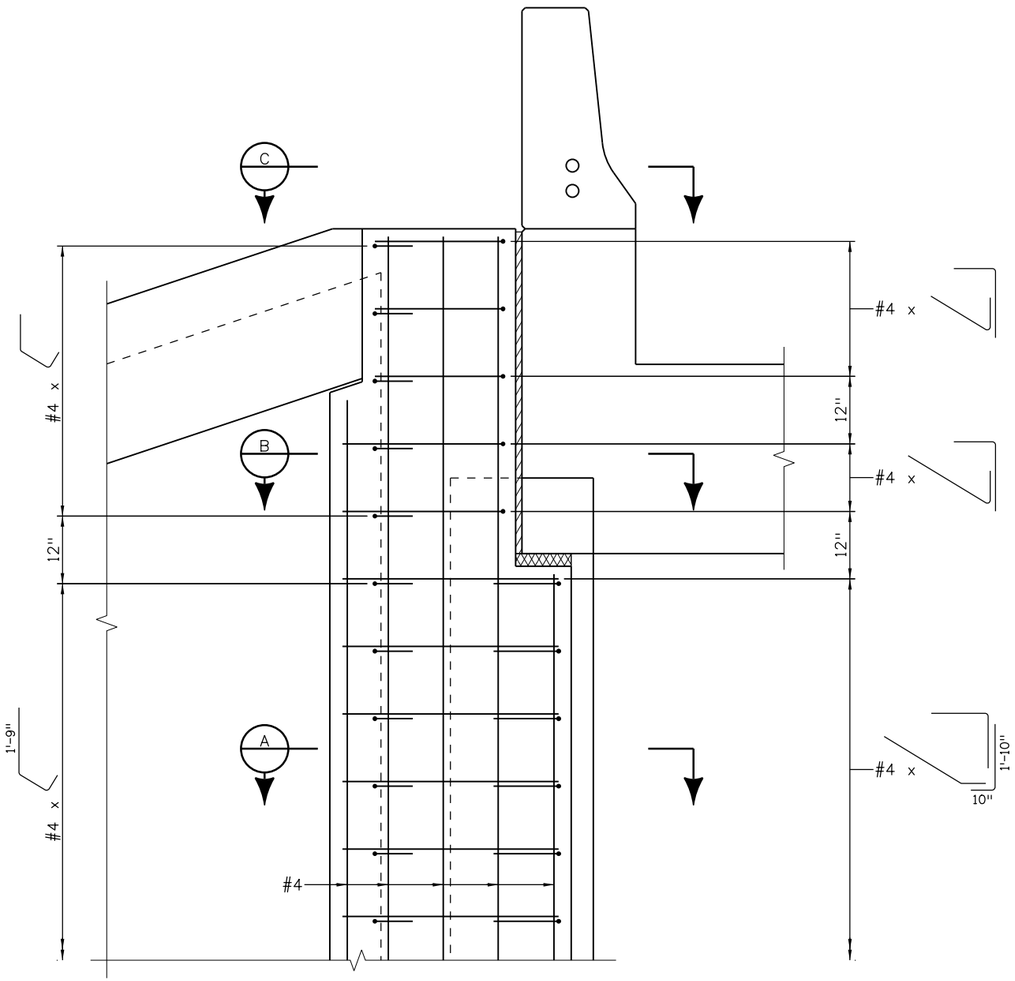

ELEVATION

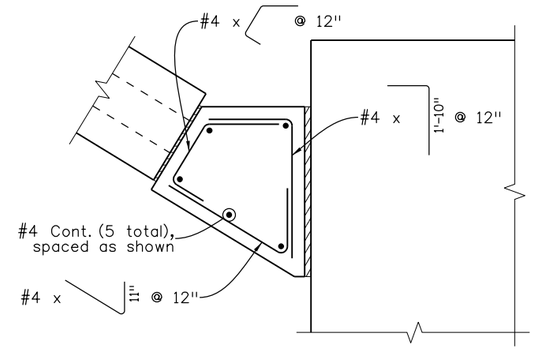

SECTION C

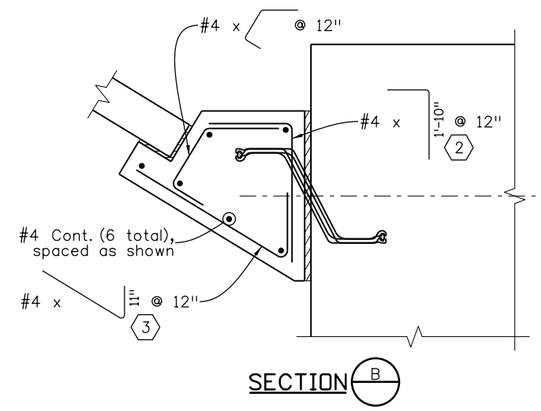

SECTION B

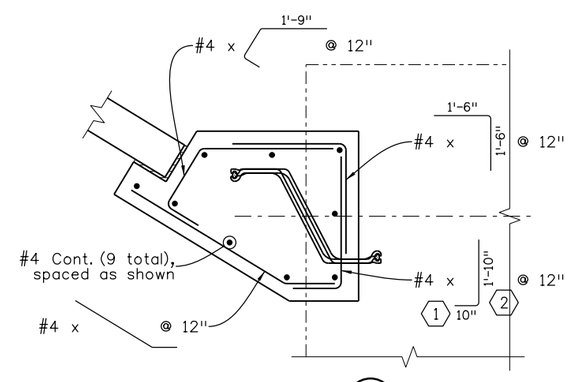

SECTION A

NOTES

1. For dimensions and annotation, see "Vertical Corner Coping Details (1 of 2)" sheet.
2. Vertical coping at south end of Wall A shown, all other locations are similar.

KEY NOTES

1. Trim 10" leg to provide 2" minimum clearance to face of concrete.
2. Place through 1" diameter hole through pile. Holes shall be created after driving.
3. Trim 11" leg to avoid pile.

Design			Detail			Quantities		
	INITIAL	DATE		INITIAL	DATE		INITIAL	DATE
Designed By	MAG	05/15	Detailed By	MJW	05/15	Quantities By	JWG	05/15
Checked By	JWS	05/15	Checked By	MAG	05/15	Checked By	MAG	05/15

P:\1303540B - I-70 over Havana DB\19339\Bridge\Drawings\19339BRDG_B209-10-VertCorCopingDet.dgn
isaiah.quintana
6/29/2015 6:00:38 PM
DGN MODEL:sheet2

Print Date: 6/29/2015
File Name: 19339BRDG_B209-10-VertCorCopingDet.dgn
Horiz. Scale: None Vert. Scale: None
Staff Bridge Branch - Unit 0224 AJP

TSIOUVARAS SIMMONS HOLDERNESS

Sheet Revisions		
Date:	Comments	Init.

Colorado Department of Transportation
4670 N. Holly
Denver, CO 80216
Phone: 303-398-6767 FAX: 303-398-6781
Region 1 KK

As Constructed
No Revisions:
Revised:
Void:

I-70 OVER HAVANA STREET DESIGN-BUILD
I-70 BRIDGE OVER FUTURE UPRR SPUR
VERTICAL CORNER COPING DETAILS (2 of 2)

Designer: M. Gilbert
Detailer: M. Welch
Sheet Subset: Bridge 2
Structure Numbers: E-17-VE
Subset Sheets: B10 of 15

Project No./Code
FBR 0704-230
19339
Sheet Number 93

RFC02 JUNE, 2015 (REVIEW)

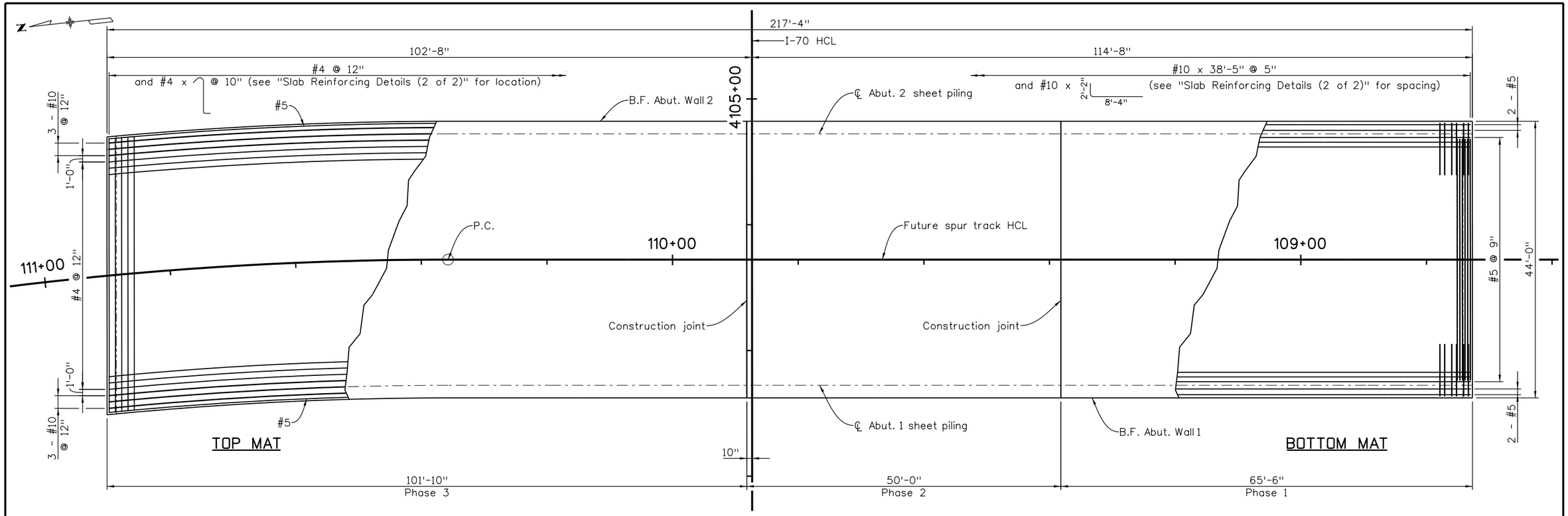

REINFORCING PLAN

NOTES

1. Lap splices for #4 bars shall be staggered and be a minimum of 1'-9", except at phasing lines, where mechanical couplers or lap splices with a minimum length of 2'-4" are required.
2. Lap splices for #5 bars shall be staggered and be a minimum of 1'-7", except at phasing lines, where mechanical couplers or lap splices with a minimum length of 2'-1" are required.
3. Lap splices for #10 bars shall be staggered and be a minimum of 8'-4", except at phasing lines, where mechanical couplers or lap splices with a minimum length of 10'-11" are required.

Design	INITIAL	DATE
Designed By	MAG	05/15
Checked By	JWS	05/15

Detail	INITIAL	DATE
Detailed By	MJW	05/15
Checked By	MAG	05/15

Quantities	INITIAL	DATE
Quantities By	JWG	05/15
Checked By	MAG	05/15

P:\13033540B - I-70 over Havana DB\19339\Bridge\Drawings\19339BRDG_B211-SlabReinfPlan.dgn

isaiah.quintana
6/29/2015 6:00:40 PM
DGN MODEL:sheet

Print Date: 6/29/2015
File Name: 19339BRDG_B211-SlabReinfPlan.dgn
Horiz. Scale: None Vert. Scale: None
Staff Bridge Branch - Unit 0224 AJP

TSIOUVARAS SIMMONS HOLDERNESS

Sheet Revisions		
Date:	Comments	Init.

Colorado Department of Transportation
4670 N. Holly
Denver, CO 80216
Phone: 303-398-6767 FAX: 303-398-6781
Region 1 KK

As Constructed
No Revisions:
Revised:
Void:

I-70 OVER HAVANA STREET DESIGN-BUILD
I-70 BRIDGE OVER FUTURE UPRR SPUR
SLAB REINFORCING PLAN

Designer: M. Gilbert
Detailer: M. Welch
Sheet Subset: Bridge 2
Structure Numbers: E-17-VE
Subset Sheets: B11 of 15

Project No./Code
FBR 0704-230
19339
Sheet Number 94

RFC02 JUNE, 2015 (REVIEW)

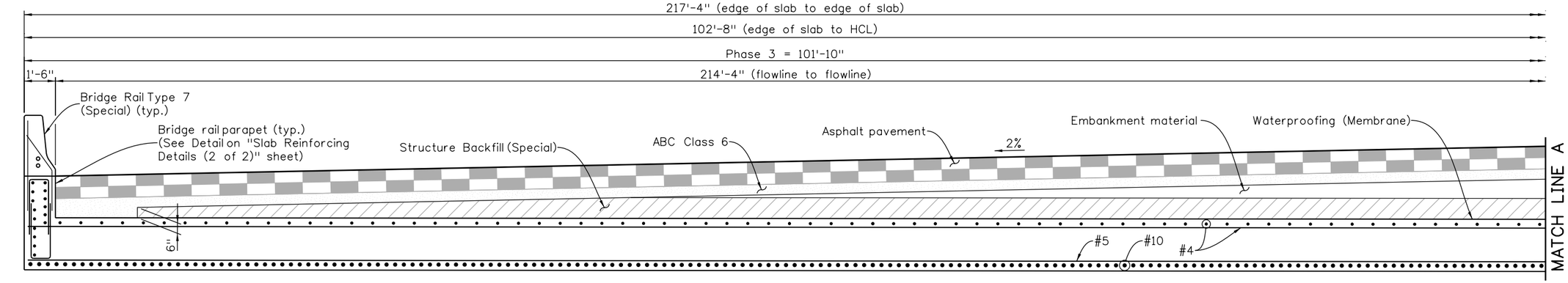

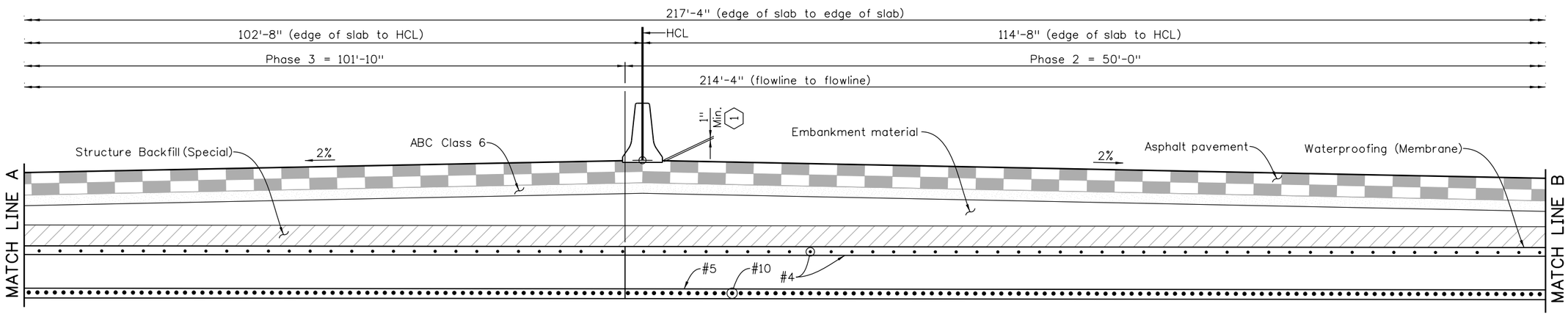

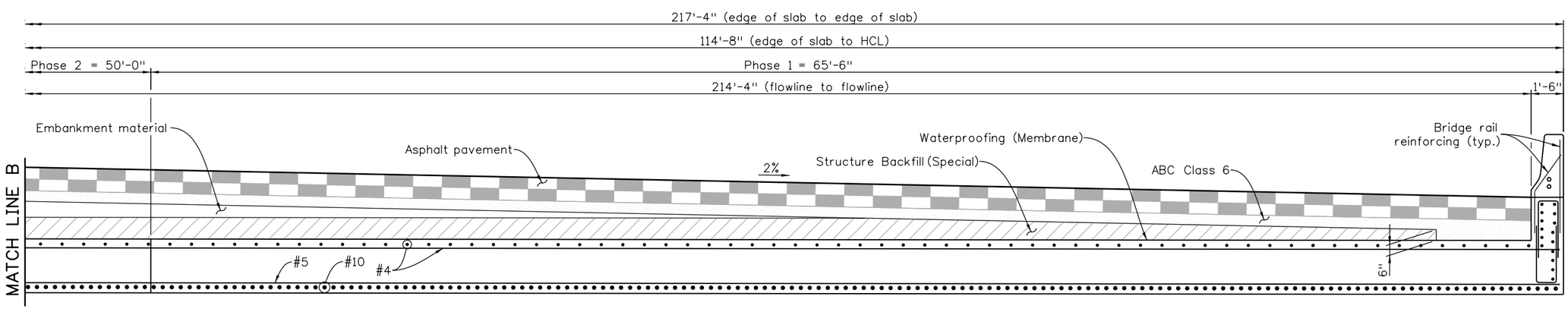

TRANSVERSE SECTION

(Looking East)
(Taken normal to I-70 HCL)

KEY NOTES

1. See CDOT standard plan M-606-13 for additional information.

Design			Detail			Quantities		
	INITIAL	DATE		INITIAL	DATE		INITIAL	DATE
Designed By	MAG	05/15	Detailed By	MJW	05/15	Quantities By	JWG	05/15
Checked By	JWS	05/15	Checked By	MAG	05/15	Checked By	MAG	05/15

jasiah.quintana
6/29/2015 6:00:41 PM
DGN MODEL:sheet1
P:\130354DB - I-70 over Havana DB\19339\Bridge\Drawings\19339BRDG_B212-13-SlabReinfDet.dgn

Print Date: 6/29/2015
File Name: 19339BRDG_B212-13-SlabReinfDet.dgn
Horiz. Scale: None Vert. Scale: None
Staff Bridge Branch - Unit 0224 AJP

TSIOUVARAS SIMMONS HOLDERNESS

Sheet Revisions		
Date:	Comments	Init.

Colorado Department of Transportation
4670 N. Holly
Denver, CO 80216
Phone: 303-398-6767 FAX: 303-398-6781
Region 1 KK

As Constructed
No Revisions:
Revised:
Void:

I-70 OVER HAVANA STREET DESIGN-BUILD
I-70 BRIDGE OVER FUTURE UPRR SPUR
SLAB REINFORCING DETAILS (1 OF 2)

Designer: M. Gilbert
Detailer: M. Welch
Sheet Subset: Bridge 2
Structure Numbers: E-17-VE
Subset Sheets: B12 of 15

Project No./Code
FBR 0704-230
19339
Sheet Number 95

RFC02 JUNE, 2015 (REVIEW)

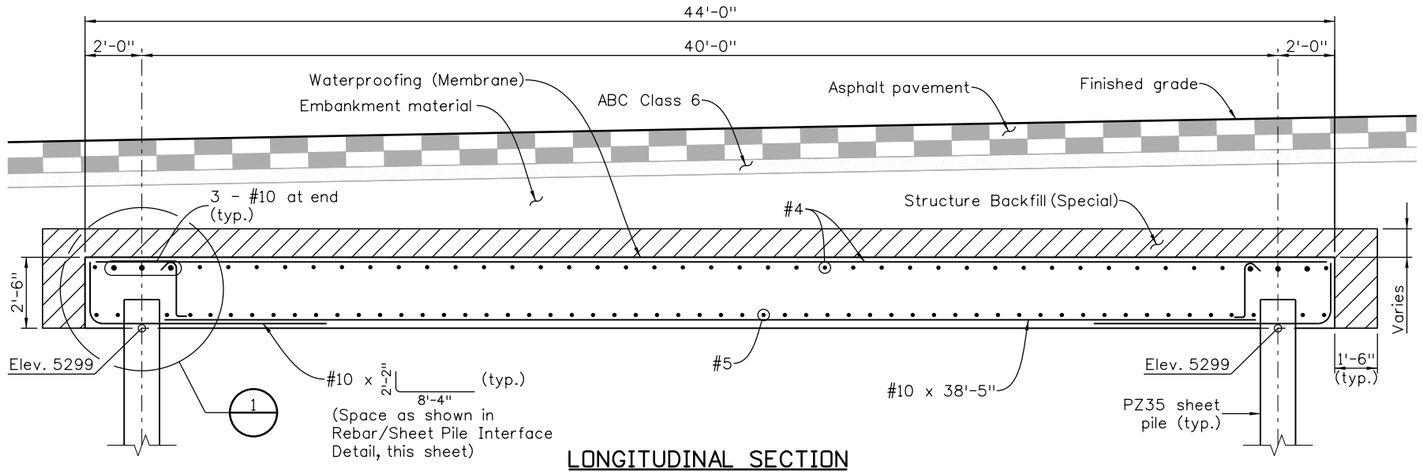

LONGITUDINAL SECTION

(Looking North)
(Taken normal to ℄ Future Spur Track)

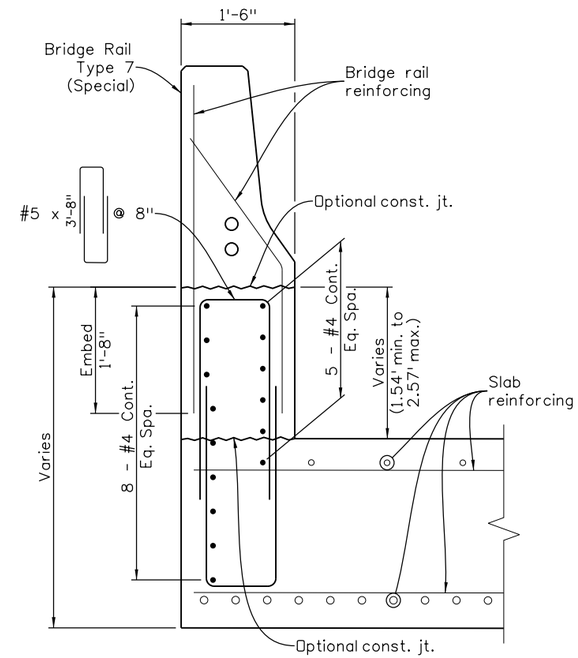

BRIDGE RAIL PARAPET DETAIL

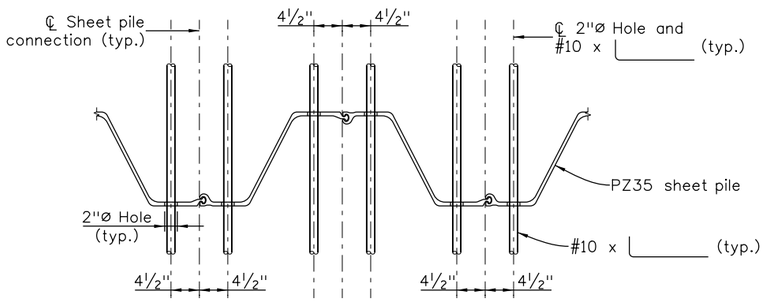

REBAR/SHEET PILE INTERFACE DETAIL

(Only #10 bars through piling shown for clarity)

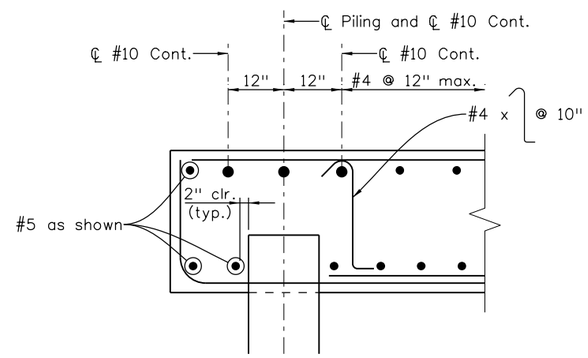

DETAIL 1

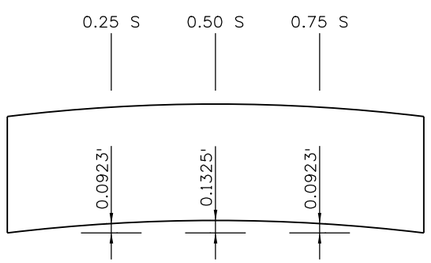

CAMBER DIAPHRAGM

SLAB CONSTRUCTION SEQUENCE

1. Construct rat slab with cambers shown to bottom of slab.
2. Place constant thickness slab.
3. Place Structure Backfill, embankment material, ABC Class 6, and all but the top lift of asphalt pavement.
4. Excavate and remove rat slab.
5. Place top lift of asphalt.

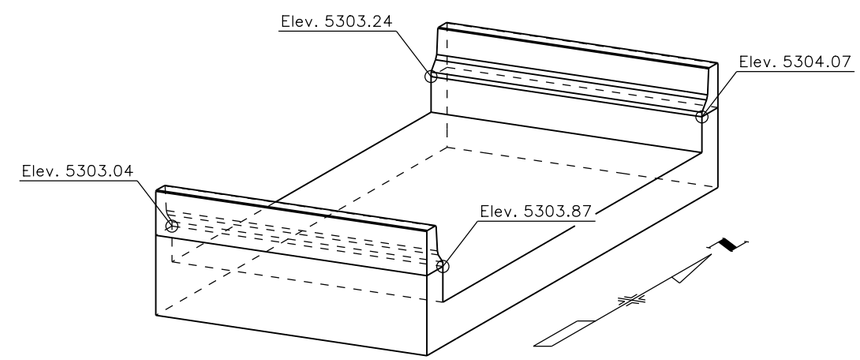

ISOMETRIC VIEW - TOP OF PARAPET ELEVATIONS

(Not to scale)

Design			Detail			Quantities		
	INITIAL	DATE		INITIAL	DATE		INITIAL	DATE
Designed By	MAG	05/15	Detailed By	MJW	05/15	Quantities By	JWG	05/15
Checked By	JWS	05/15	Checked By	MAG	05/15	Checked By	MAG	05/15

jasiah.quintana
6/29/2015 6:00:43 PM
DGN MODEL:sheet2
P:\130354DB - I-70 over Havana DB\19339\Bridge\Drawings\19339BRDG_B212-13-SlabReinfDet.dgn

RFC02 JUNE, 2015 (REVIEW)

Print Date: 6/29/2015
File Name: 19339BRDG_B212-13-SlabReinfDet.dgn
Horiz. Scale: None Vert. Scale: None
Staff Bridge Branch - Unit 0224 AJP

TSIOUVARAS SIMMONS HOLDERNESS

Sheet Revisions		
Date:	Comments	Init.

Colorado Department of Transportation
4670 N. Holly
Denver, CO 80216
Phone: 303-398-6767 FAX: 303-398-6781
Region 1 KK

As Constructed
No Revisions:
Revised:
Void:

I-70 OVER HAVANA STREET DESIGN-BUILD
I-70 BRIDGE OVER FUTURE UPRR SPUR
SLAB REINFORCING DETAILS (2 OF 2)

Designer: M. Gilbert
Detailer: M. Welch
Sheet Subset: Bridge 2
Structure Numbers: E-17-VE
Subset Sheets: B13 of 15

Project No./Code
FBR 0704-230
19339
Sheet Number 96

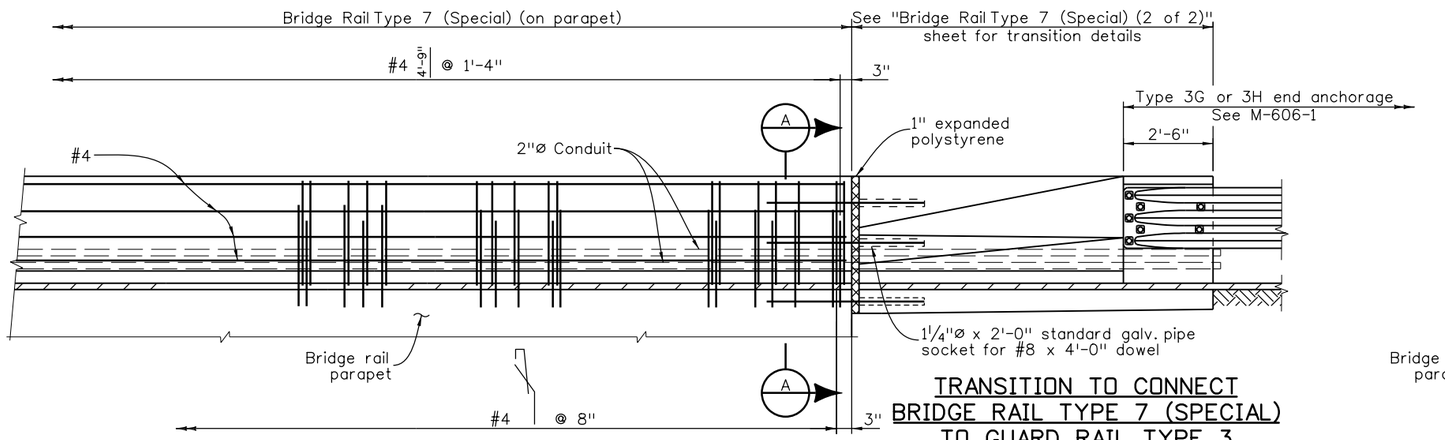

TRANSITION TO CONNECT BRIDGE RAIL TYPE 7 (SPECIAL) TO GUARD RAIL TYPE 3

ELEVATION

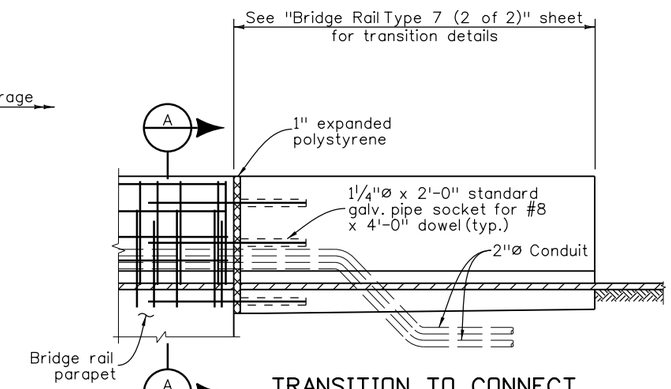

TRANSITION TO CONNECT BRIDGE RAIL TYPE 7 (SPECIAL) TO ROADWAY SHOULDER TYPE 7

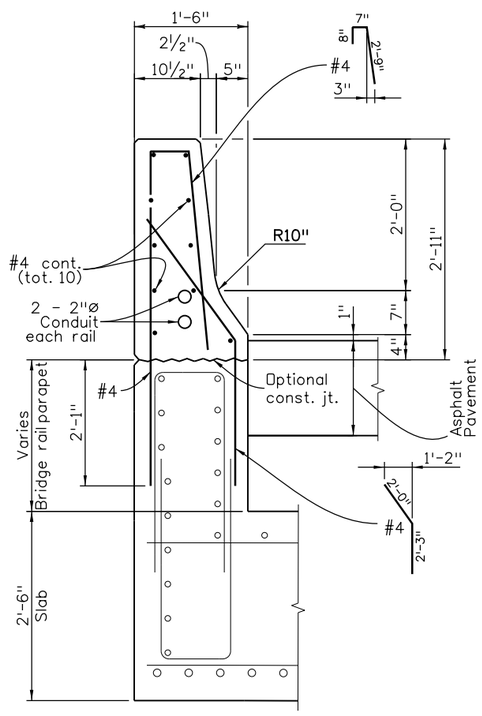

TYPICAL SECTION

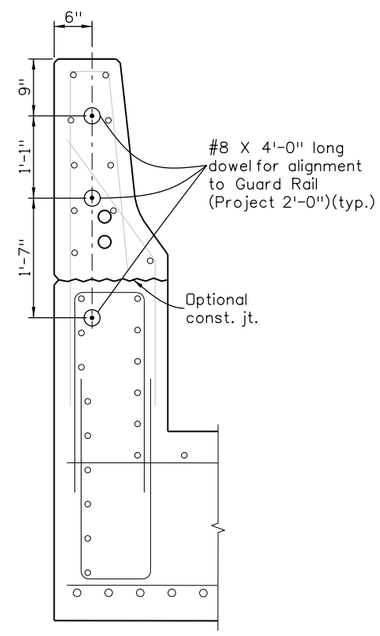

SECTION A

NOTES:

1. Backfill retaining walls before barrier is placed.
2. All bridge rail concrete shall be Class D.
3. Longitudinal reinforcement shall stop at all expansion joints.
4. Bridge rail shall be constructed plumb.
5. See Std. M-606-1 and M-606-13 for Guard Rail Type 3 details and details of transition.
6. Concrete and reinforcing steel shall conform to the requirements of Sections 601 and 602.
7. The surface of the rail shall be tested with a 10 foot straight edge laid along the surface in the longitudinal direction. Deviation of the concrete surface from the straight edge shall be less than ¼" plus allowance for roadway horizontal and vertical curvature, if any.
8. At the two locations where Bridge Rail Type 7 transitions to Guardrail Type 3, project conduit 3" from end of Bridge Rail Type 3 End Transition and cap end of conduit.

DESIGN DATA

Reinforced concrete:

Class D Concrete: f'_c = 4,500 psi
Reinforcing steel: f_y = 60,000 psi

INFORMATION ONLY

Description	Unit	Per Lin. Ft.
Concrete Class D	Cu. Yd.	0.12
Reinforcing Steel (Epoxy Coated)	Lb.	17.3

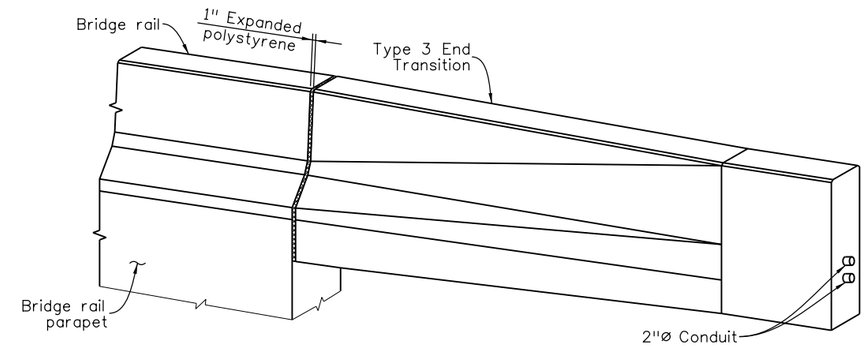

ISOMETRIC VIEW - TYPE 3 END TRANSITION

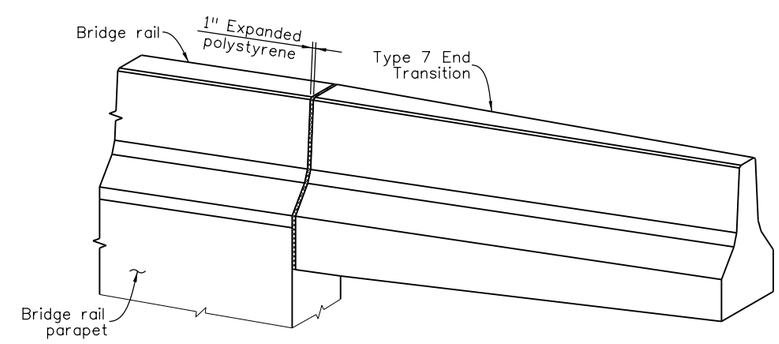

ISOMETRIC VIEW - TYPE 7 END TRANSITION

Quantities			
		INITIAL	DATE
Quantities By		JWG	05/15
Checked By		MAG	05/15

Detail			
	INITIAL	DATE	
Detailed By	MJW	05/15	
Checked By	MAG	05/15	

Design			
	INITIAL	DATE	
Designed By	MAG	05/15	
Checked By	JWS	05/15	

P:\130335408 - I-70 over Havana DB\19339\Bridge\Drawings\19339BRDG_B214-BridgeRailT701.dgn
isaiah.quintana
6/29/2015 6:01:08 PM
DGN MODEL:sheet

Print Date: 6/29/2015
File Name: 19339BRDG_B214-BridgeRailT701.dgn
Horiz. Scale: None Vert. Scale: None
Staff Bridge Branch - Unit 0224 AJP

LAWRENCE
TSIOUVARAS SIMMONS HOLDERNESS

Sheet Revisions		
Date:	Comments	Init.

Colorado Department of Transportation
CDOT
4670 N. Holly
Denver, CO 80216
Phone: 303-398-6767 FAX: 303-398-6781
Region 1 KK

As Constructed
No Revisions:
Revised:
Void:

I-70 OVER HAVANA STREET DESIGN-BUILD
I-70 BRIDGE OVER FUTURE UPRR SPUR
BRIDGE RAIL TYPE 7 (SPECIAL) (1 OF 2)

Designer:	M. Gilbert	Structure Numbers	E-17-VE
Detailer:	M. Welch		
Sheet Subset:	Bridge 2	Subset Sheets:	B14 of 15

Project No./Code
FBR 0704-230
19339
Sheet Number 97

RFC02 JUNE, 2015 (REVIEW)

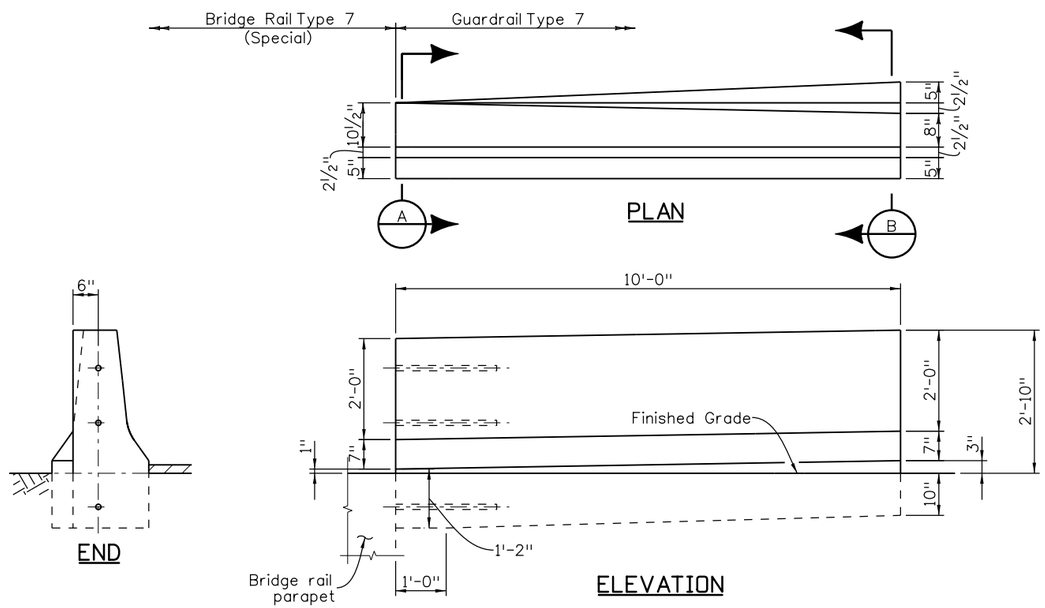

BRIDGE RAIL TYPE 7 TO ROADWAY SHOULDER TYPE 7 END TRANSITION

See M-606-13 sheet 2, transition detail, for reinforcement information.

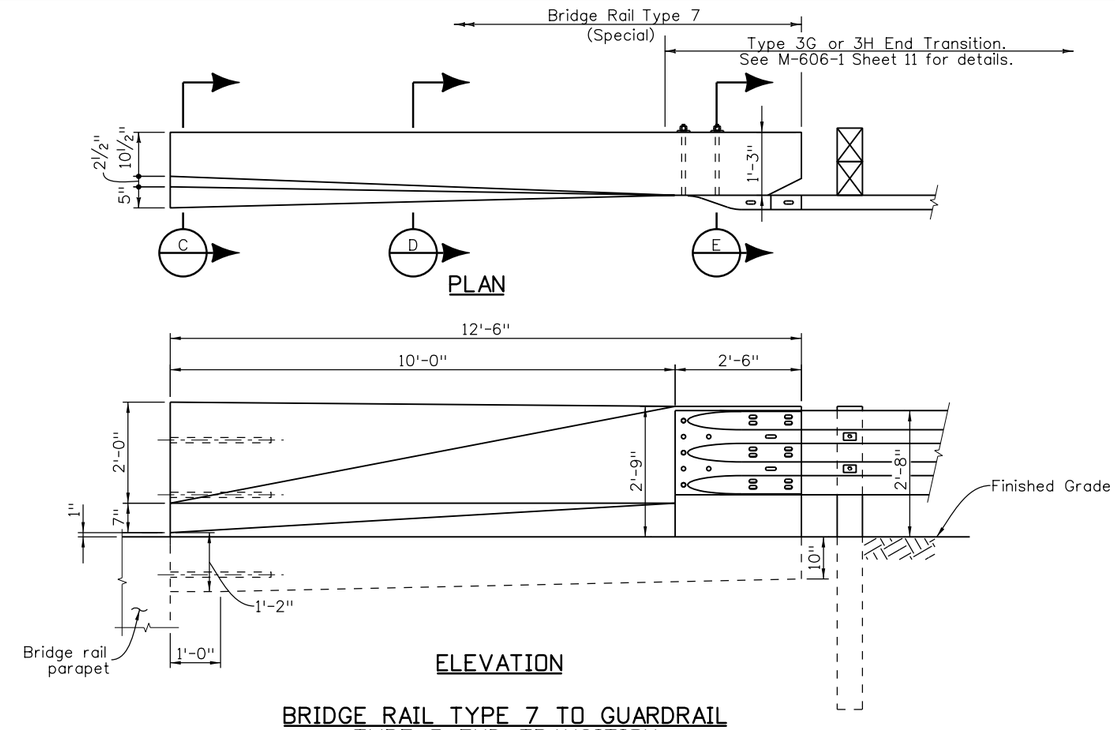

BRIDGE RAIL TYPE 7 TO GUARDRAIL TYPE 3 END TRANSITION

Reinforcement per M-606-13 sheet 2, transition detail type 7 to single type 3G.

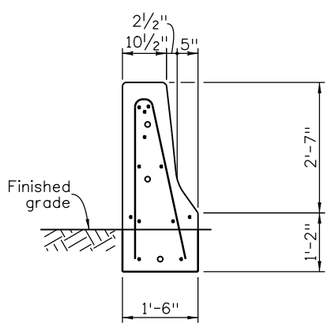

SECTION A

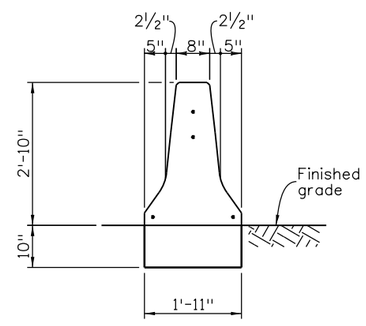

SECTION B

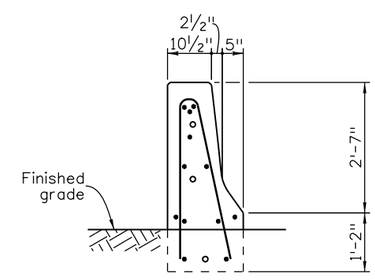

SECTION C

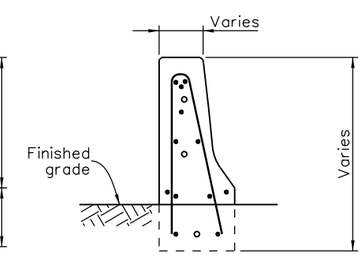

SECTION D

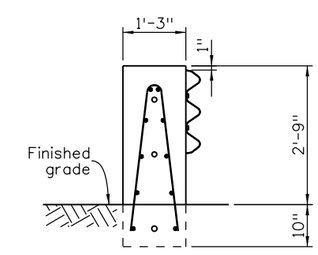

SECTION E

Design			Detail			Quantities		
	INITIAL	DATE		INITIAL	DATE		INITIAL	DATE
Designed By	MAG	05/15	Detailed By	MJW	05/15	Quantities By	JWG	05/15
Checked By	JWS	05/15	Checked By	MAG	05/15	Checked By	MAG	05/15

P:\13033540B - I-70 over Havana DB\19339\Bridge\Drawings\19339BRDG_B215-BridgeRailT702.dgn
isaiah.quintana
6/29/2015 6:01:09 PM
DGN MODEL:sheet

Print Date: 6/29/2015
File Name: 19339BRDG_B215-BridgeRailT702.dgn
Horiz. Scale: None Vert. Scale: None
Staff Bridge Branch - Unit 0224 AJP

TSIOUVARAS SIMMONS HOLDERNESS

Sheet Revisions		
Date:	Comments	Init.

Colorado Department of Transportation
4670 N. Holly
Denver, CO 80216
Phone: 303-398-6767 FAX: 303-398-6781
Region 1 KK

As Constructed
No Revisions:
Revised:
Void:

I-70 OVER HAVANA STREET DESIGN-BUILD
I-70 BRIDGE OVER FUTURE UPRR SPUR
BRIDGE RAIL TYPE 7 (SPECIAL) (2 OF 2)

Designer: M. Gilbert
Detailer: M. Welch
Sheet Subset: Bridge 2
Structure Numbers: E-17-VE
Subset Sheets: B15 of 15

Project No./Code
FBR 0704-230
19339
Sheet Number 98

RFC02 JUNE, 2015 (REVIEW)

CONCRETE PANEL FACING MSE WALLS
AND WIRE FACING MSE AND SOIL NAIL WALL

PROJECT NO. FBR 0704-230 / PROJECT CODE: 19339
I-70 OVER HAVANA STREET DESIGN-BUILD
CITY AND COUNTY OF DENVER, COLORADO

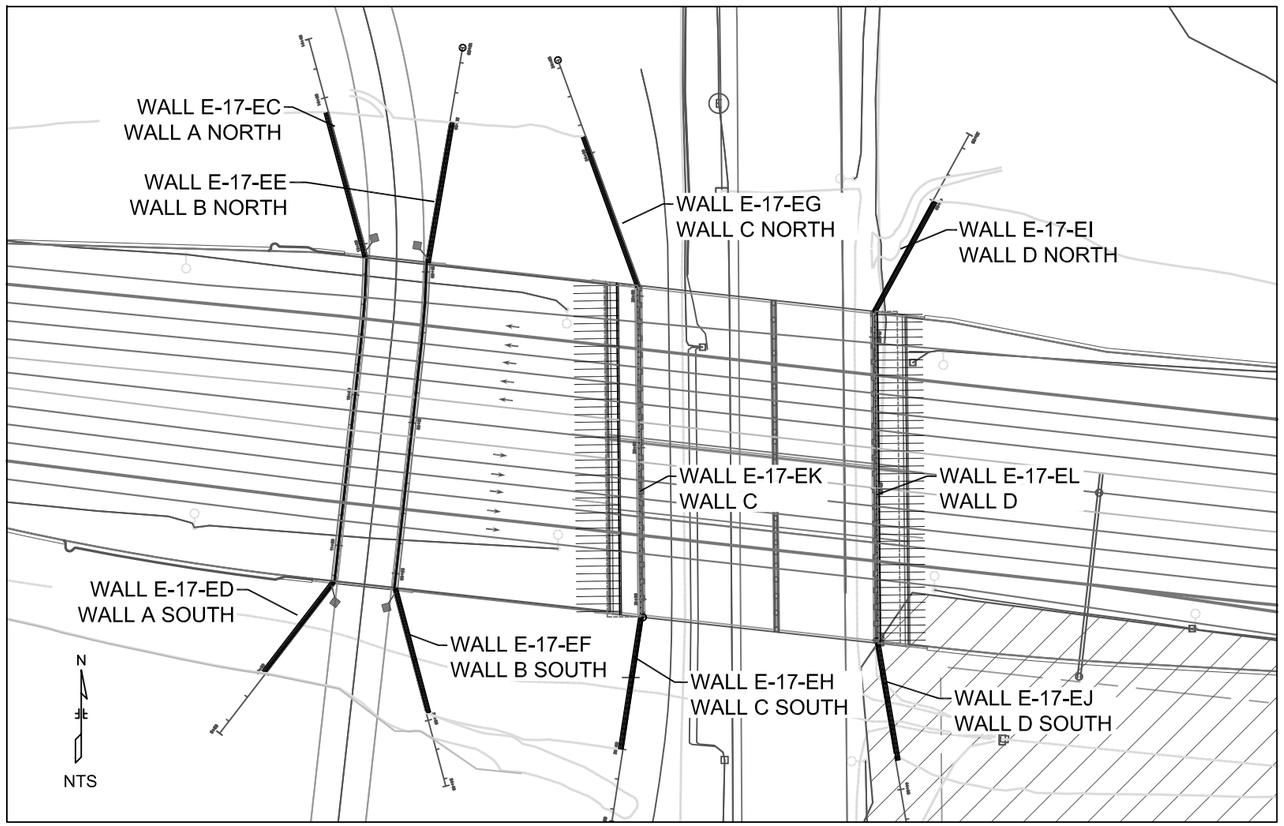

SITE VICINITY MAP

Index of Drawings

W-1 Cover Sheet
W-2 Concrete Panel Facing MSE Wall General Notes
W-3 Concrete Panel Facing MSE Wall Summary of Quantities
W-4 Wing Wall A South Plan and Profile
W-5 Wing Wall A North Plan and Profile
W-6 Wing Wall B North Plan and Profile
W-7 Wing Wall B South Plan and Profile
W-8 Wing Wall C South Plan and Profile
W-9 Wing Wall C North Plan and Profile
W-10 Wing Wall D North Plan and Profile
W-11 Wing Wall D South Plan and Profile
W-12 Typical Concrete Panel Facing MSE Wall Section
W-13 Typical Concrete Panel Facing MSE Wall Details 1
W-14 Typical Concrete Panel Facing MSE Wall Details 2
W-15 Typical Concrete Panel Facing MSE Wall Details 3
W-16 Typical Precast Coping Sections and Details
W-17 Typical Coping Installation Details
W-18 Wire Face MSE Wall General Notes
W-19 Wire Face MSE Wall Summary of Quantities
W-20 Soil Nail Wall General Notes
W-21 Soil Nail Wall Summary of Quantities
W-22 Wall C Ph. 1 & 2 Plan and Profile
W-23 Wall C Ph. 3 Plan and Profile
W-24 Wall D Ph. 3 Plan and Profile
W-25 Wall D Ph. 1 & 2 Plan and Profile
W-26 Typical Wall C Wall Section
W-27 Typical Wall D Wall Section
W-28 Wire Face MSE Panel Details
W-29 Wire Face MSE Panel Component Details
W-30 Wire Face MSE Panel Installation Details
W-31 Wire Face MSE Panel Construction Procedure
W-32 Typical Soil Nail Details

COLORADO REGISTERED PROFESSIONAL ENGINEER
HSIANG-CHI CHIANG
34691
6-26-15

RFC02 JUNE, 2015 (REVIEW)

Print Date: 05/04/2015	Sheet Revisions	Colorado Department of Transportation	As Constructed	I-70 OVER HAVANA STREET DESIGN-BUILD	Project No./Code
File Name: 15-3500CWNOTES	Date: / Comments / Init.	4670 N. Holly Denver, CO 80216 Phone: FAX: 303-398-6781	No Revisions:	COVER SHEET	FBR 0704-230
Horiz. Scale: As Noted Vert. Scale: As Noted		Region 1 DK	Revised:	Designer: H.H.Chiang / Structure Numbers WALL-E-17-EC TO WALL-E-17-EL	19339
GROUND ENGINEERING / TSIOUVARAS SIMMONS HOLDERNESS CONSULTING ENGINEERS			Void:	Detailer: J.Arthurs/C.Henderson / Sheet Subset: Wall / Subset Sheets: W-1 of 32	Sheet Number 99

General Notes - Concrete Panel Facing MSE Walls

1. General

1.1 Structure excavation and backfill shall be in accordance with CDOT Standard M-206-1.

1.2 Expansion joint material shall meet AASHTO Specification M213.

1.3 Grade 60 reinforcing steel is required.

1.4 All concrete shall be Class D (Wall).

1.5 All reinforcing shall be plain steel, unless noted otherwise.

1.6 The following table gives the Class B minimum lap splice length for reinforcing bars placed in accordance with subsection 602.06. These splice lengths shall be increased by 25% for bars spaced at less than 6" on center.

Bar Size	#4	#5	#6	#7	#8	#9	#10	#11
Splice length for Class B Concrete	1'-3"	1'-7"	2'-5"	2'-10"	3'-8"	4'-8"	5'-11"	7'-3"

1.7 The above splice lengths shall be increased by 20 percent for 3 bar bundles and 33 percent for 4 bar bundles.

1.8 The contractor shall be responsible for the stability of the structure and excavation during construction.

1.9 Stations, elevations, and dimensions contained in these plans are calculated from a recent field survey. The contractor shall verify all dependent dimensions in the field before ordering or fabricating any material.

1.10 The information shown on these drawings concerning type and location of utilities is not guaranteed to be accurate or all inclusive. The contractor is responsible for making his own dermination as to the type and location of utilities as may be necessary to avoid damage thereto. The contractor shall contact the Utility Notification Center of Colorado at 811 or 1-800-922-1987 at least 3 days (not including the day of notification) prior to any excavation or other earthwork.

2. MSE Wall Design Criteria

2.1 AASHTO 6th Edition LRFD with current interims.

2.2 The external stability of the foundation of the wall and the identified reinforcement length requirements were checked and deemed to meet or exceed project requirements.

2.3 Reinforced Concrete:
Class D Concrete f'c = 4,500 psi
Reinforcing Steel fy = 60,000 psi

3. MSE Wall Materials

3.1 Reinforced and retained backfill shall be Structure Backfill (Special) conforming to the Project Specifications, with a minimum friction angle of 29 degrees, less than 30 percent passing the #200 sieve, and a maximum plasticity index of 10.

3.2 Strip drains shall consist of 12" wide dimpled cores wrapped in geotextile or approved equivalent. The compressive strength of the core should be at least 20 psi when tested in accordance with ASTM D1621 and its in-plane flow capacity should be at least 10 GAL/MIN/FT when tested in accordance with ASTM D4716.

3.3 Plates and angles shall be galvanized steel as shown on the plans.

4. MSE Wall Construction Sequence

4.1 Wall foundation shall be scarified to a minimum depth of 12", moisture conditioned, and recompacted to at least 95% of maximum dry density as determined by the modified proctor (AASHTO T-180) at optimum moisture content ± 2%.

4.2 Install at elevations shown on the drawings.

4.3 Reinforcement zone and retained zone backfill shall be placed in lifts no thicker than 8" for heavy compaction equipment and in lifts no thicker than 4" for hand-operated compaction equipment. Backfill shall be placed in horizontal layers and compacted against horizontal surfaces. Only hand-operated compaction equipment shall be used within 3' of the panel facing. Backfill shall be placed and compacted sequentially from the wall face to the back of the reinforcements to aid in tensioning.

4.4 Reinforcement zone and retained zone backfill shall be benched into existing material behind excavation line and compacted to at least 95% of maximum dry density by the modified proctor (AASHTO T-180) at optimum moisture content ± 2%.

4.5 Install the drain pipes and strip drains as shown on the Shop Drawings.

4.6 Place reinforcements as shown on the Shop Drawings.

4.7 Strip drains shall be placed on the bottom region of the excavation as shown on the plans.

4.8 Reinforcement lengths as shown on the plans are measured from the inside face of the panels.

5. Abbreviations

BG	Finish grade at bottom of wall
BW	Bottom of wall
DH	Design wall height
DIA	Diameter
LTDS	Long Term Design Strength
MAX	Maximum
MIN	Minimum
MOD	Modified
NP	Number of Panels
NTS	Not to scale
OC	On centers
PLG	Pay length of geomembrane
RL	Reinforcement length
S	Tributary Reinforcement Spacing
TC	Top of coping
TYP	Typical
Tult	Ultimate Tensile Strength of Reinforcement
Φ_f	Friction angle of foundation soil
Φ	Friction angle of Structure Backfill (Special)

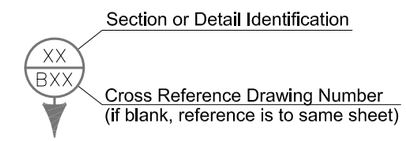

Know what's below. Call before you dig.

RFC02 JUNE, 2015 (REVIEW)

Print Date: 05/04/2015	Sheet Revisions	Colorado Department of Transportation	As Constructed	I-70 OVER HAVANA STREET DESIGN-BUILD CONCRETE PANEL FACING MSE WALL GENERAL NOTES	Project No./Code
File Name: 15-3500CWNOTES	Date: / Comments / Init.	4670 N. Holly Denver, CO 80216 Phone: FAX: 303-398-6781	No Revisions:		FBR 0704-230
Horiz. Scale: As Noted Vert. Scale: As Noted		Region 1 DK	Revised:	Designer: H.H.Chiang / Structure Numbers WALL-E-17-EC TO WALL-E-17-EJ	19339
GROUND ENGINEERING / TSIOUVARAS SIMMONS HOLDERNESS CONSULTING ENGINEERS			Void:	Detailer: J.Arthurs / Sheet Subset: Wall / Subset Sheets: W-2 of 32	Sheet Number 100

Summary of Quantities

Item No.	Description	Unit	Wing Wall A North WALL-E-17-EC	Wing Wall A South WALL-E-17-ED	Wing Wall B North WALL-E-17-EE	Wing Wall B South WALL-E-17-EF	Wing Wall C North WALL-E-17-EG	Wing Wall C South WALL-E-17-EH	Wing Wall D North WALL-E-17-EI	Wing Wall D South WALL-E-17-EJ
206-00100	Structure Backfill, Class 1 (Special)	CY	2,796	2,062	2,753	2,369	1,526	1,363	843	752
206-00360	Mechanical Reinforcement of Soil	CY	1,872	1,383	1,839	1,581	964	856	537	480
504-04420	Precast Panel Facing	SF	1,999	1,481	1,941	1,697	1,616	1,427	1,084	958

RFC02 JUNE, 2015 (REVIEW)

Print Date: 05/04/2015
File Name: 15-3500CWNOTES
Horiz. Scale: As Noted Vert. Scale: As Noted

GROUND ENGINEERING
TSIOUVARAS SIMMONS HOLDERNESS CONSULTING ENGINEERS

Sheet Revisions

Date:	Comments	Init.

Colorado Department of Transportation
4670 N. Holly
Denver, CO 80216
Phone:
FAX: 303-398-6781
Region 1
DK

As Constructed
No Revisions:
Revised:
Void:

I-70 OVER HAVANA STREET DESIGN-BUILD
CONCRETE PANEL FACING MSE WALL
SUMMARY OF QUANTITIES

Designer: H.H.Chiang
Detailer: J.Arthurs
Sheet Subset: Wall
Structure Numbers: WALL-E-17-EC TO WALL-E-17-EJ
Subset Sheets: W-3 of 32

Project No./Code
FBR 0704-230
19339
Sheet Number 101

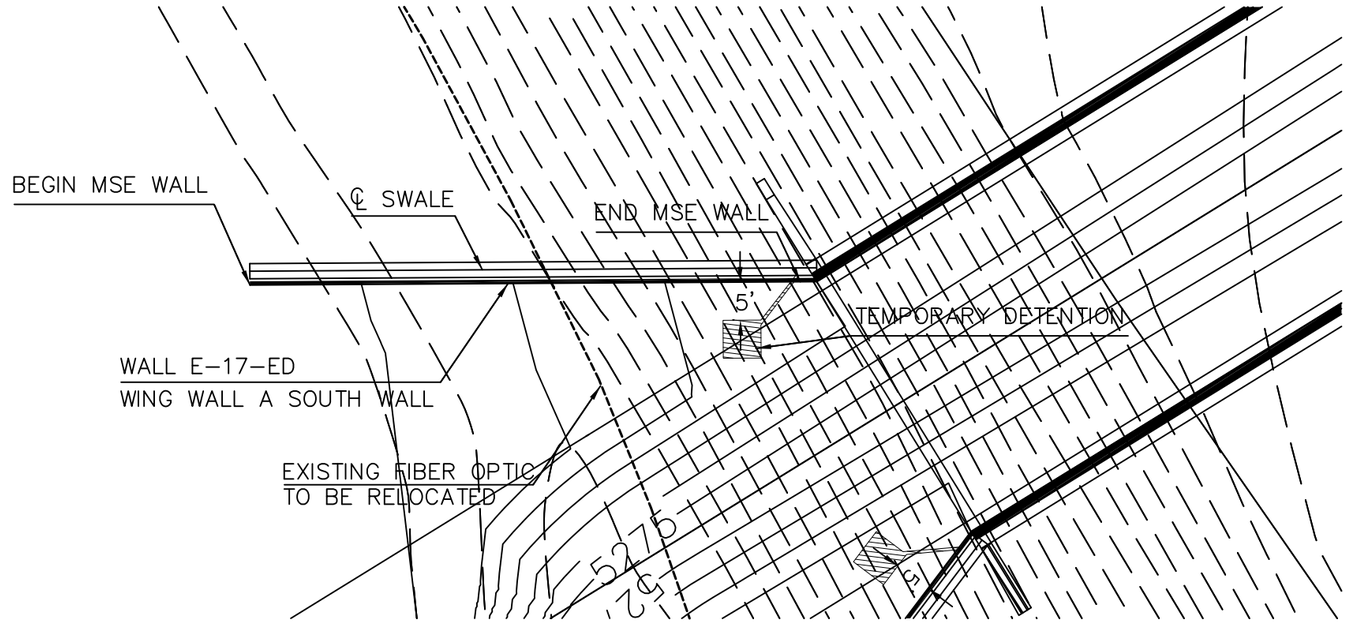

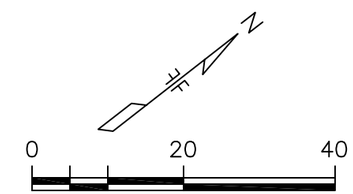

SCALE: 1" = 20'

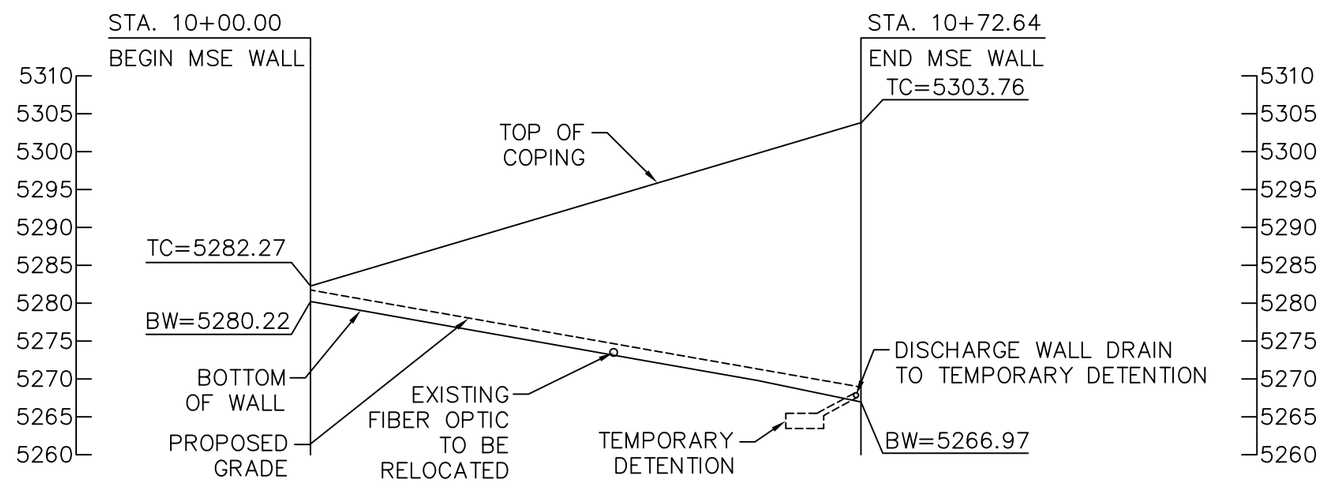

WING WALL A SOUTH (E-17-ED)

STA. 10+00.00 TO 10+74.81

NOTE: CONTRACTOR SHALL FIELD ADJUST BEGIN/END WALL STATIONING AS NEEDED

RFC02 JUNE, 2015 (REVIEW)

Print Date: 05/04/2015	Sheet Revisions	Colorado Department of Transportation	As Constructed	I-70 OVER HAVANA STREET DESIGN-BUILD	Project No./Code
File Name: 15-3500CWP&P	Date: / Comments / Init.	4670 N. Holly Denver, CO 80216 Phone: FAX: 303-398-6781	No Revisions:	WING WALL A SOUTH PLAN AND PROFILE	FBR 0704-230
Horiz. Scale: As Noted Vert. Scale: As Noted		Region 1 DK	Revised:	Designer: H.H.Chiang / Structure Numbers: WALL-E-17-ED	19339
GROUND ENGINEERING / TSIOUVARAS SIMMONS HOLDERNESS CONSULTING ENGINEERS			Void:	Detailer: J.Arthurs / Sheet Subset: Wall / Subset Sheets: W-4 of 32	Sheet Number 102

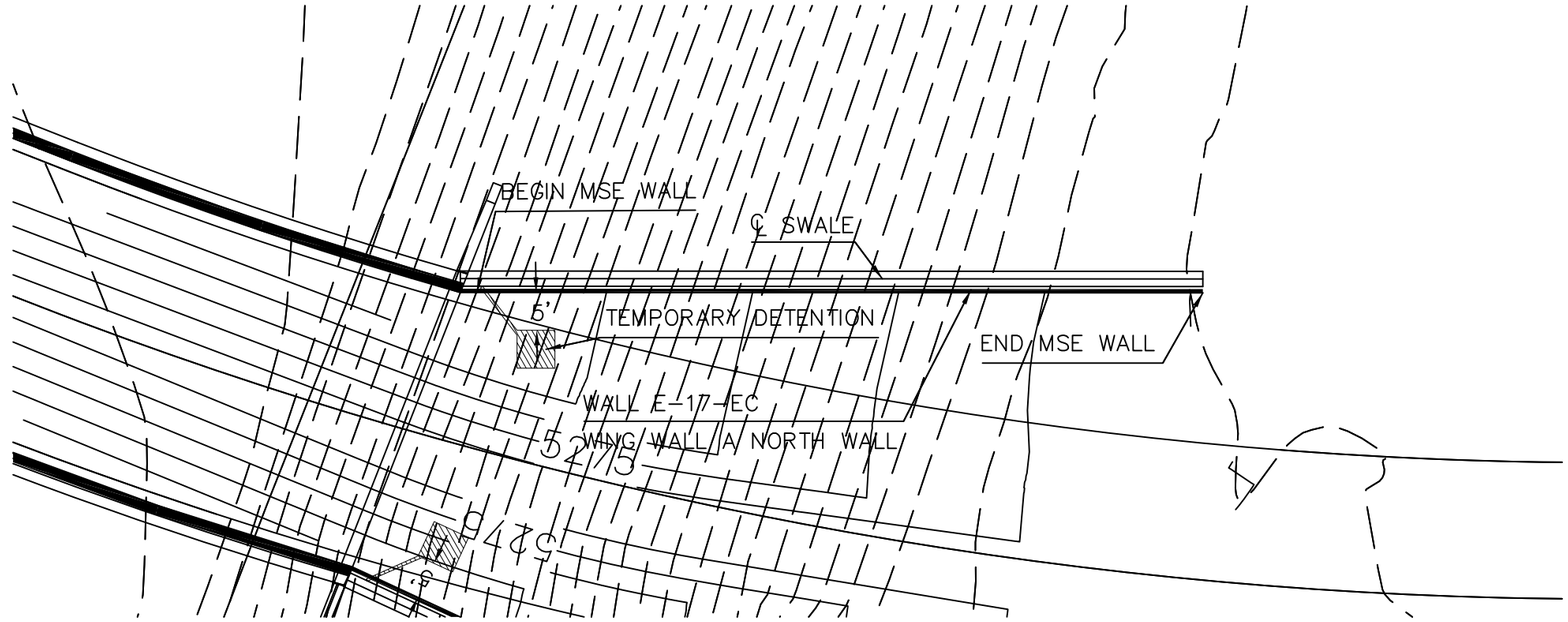

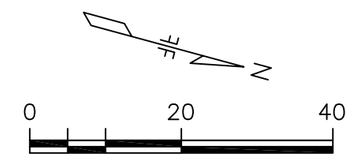

SCALE: 1" = 20'

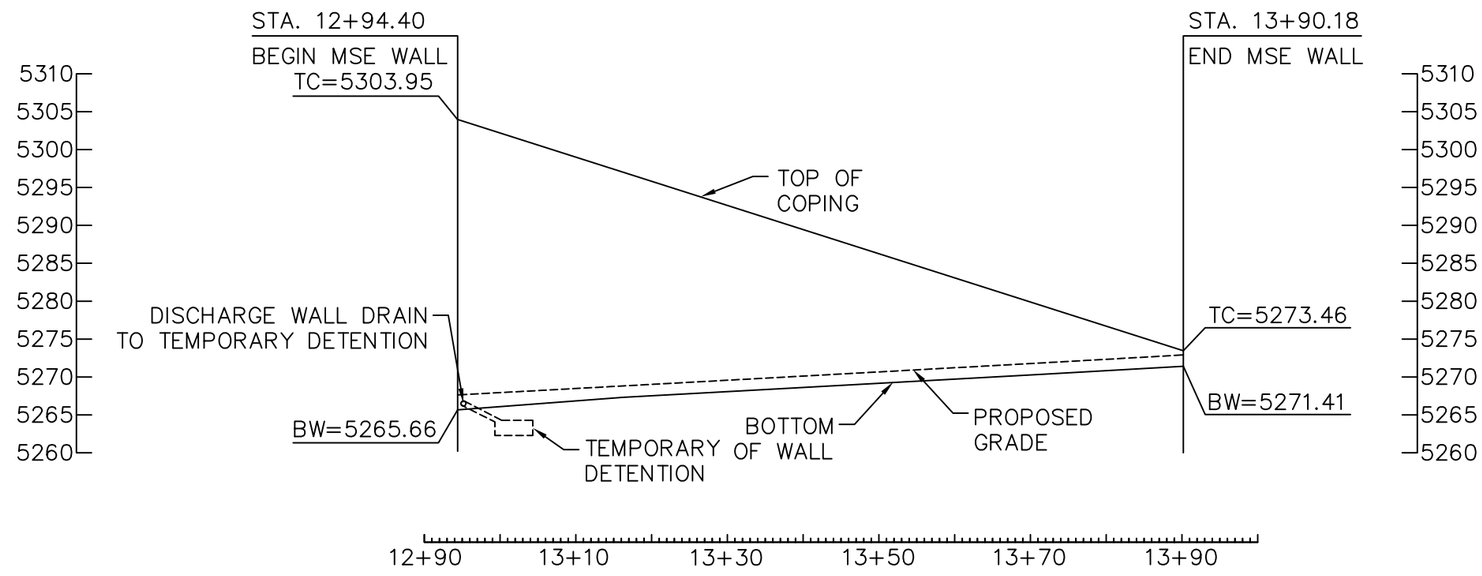

WING WALL A NORTH (E-17-EC)
STA. 12+92.22 TO 13+90.18

NOTE: CONTRACTOR SHALL FIELD ADJUST BEGIN/END WALL STATIONING AS NEEDED

RFC02 JUNE, 2015 (REVIEW)

Print Date: 05/04/2015	Sheet Revisions	Colorado Department of Transportation	As Constructed	I-70 OVER HAVANA STREET DESIGN-BUILD	Project No./Code
File Name: 15-3500CWP&P	Date: / Comments / Init.	4670 N. Holly Denver, CO 80216 Phone: FAX: 303-398-6781	No Revisions:	WING WALL A NORTH PLAN AND PROFILE	FBR 0704-230
Horiz. Scale: As Noted Vert. Scale: As Noted		Region 1 DK	Revised:	Designer: H.H.Chiang / Structure Numbers: WALL-E-17-EC	19339
GROUND ENGINEERING / TSIOUVARAS SIMMONS HOLDERNESS CONSULTING ENGINEERS			Void:	Detailer: J.Arthurs / Sheet Subset: Wall / Subset Sheets: W-5 of 32	Sheet Number 103

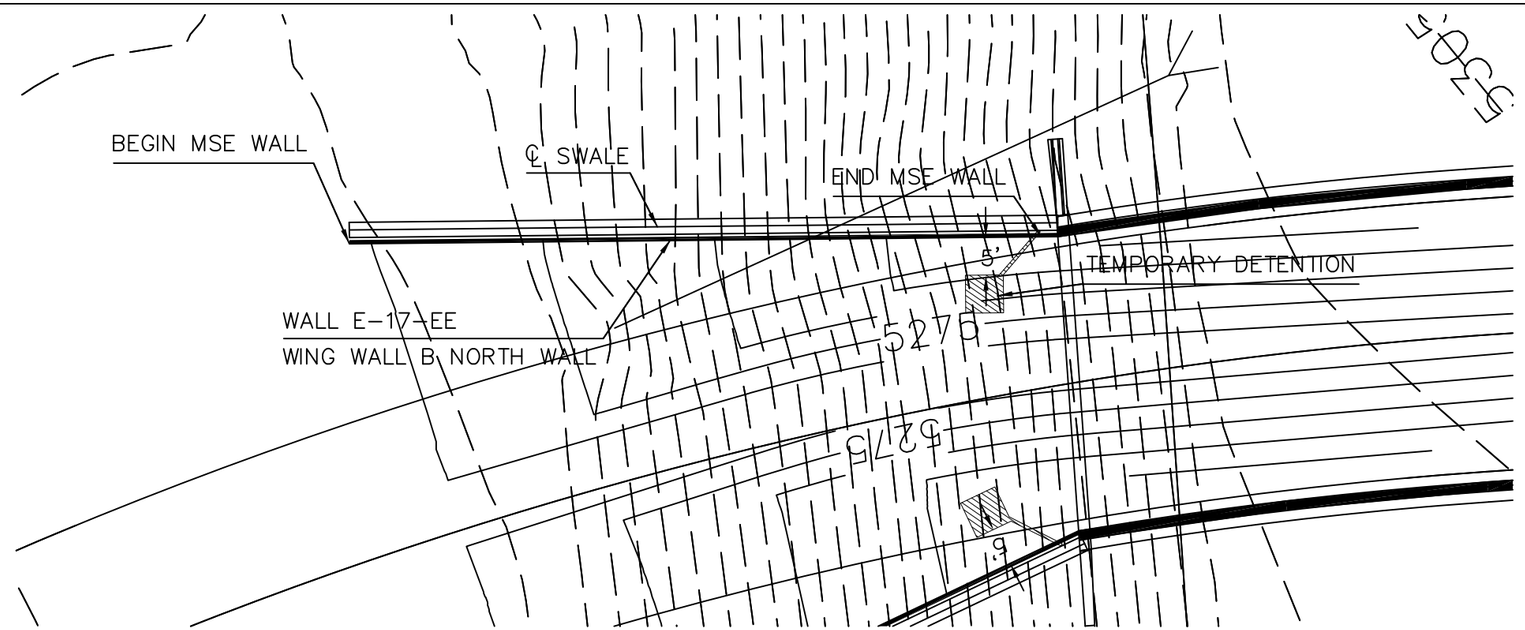

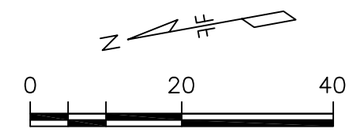

SCALE: 1" = 20'

NOTE: CONTRACTOR SHALL FIELD ADJUST BEGIN/END WALL STATIONING AS NEEDED

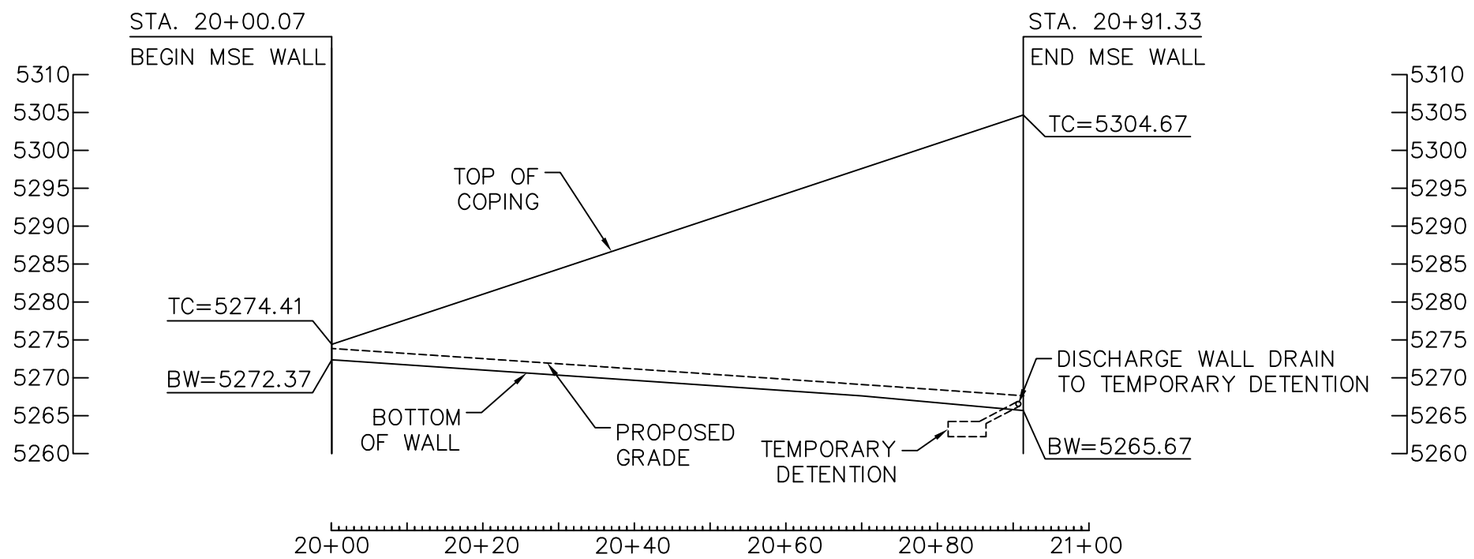

WING WALL B NORTH (E-17-EE)
STA. 20+00.07 TO 20+93.50

RFC02 JUNE, 2015 (REVIEW)

Print Date: 05/04/2015	Sheet Revisions	Colorado Department of Transportation	As Constructed	I-70 OVER HAVANA STREET DESIGN-BUILD	Project No./Code
File Name: 15-3500CWP&P	Date: / Comments / Init.	4670 N. Holly Denver, CO 80216 Phone: FAX: 303-398-6781	No Revisions:	WING WALL B NORTH PLAN AND PROFILE	FBR 0704-230
Horiz. Scale: As Noted Vert. Scale: As Noted		Region 1 DK	Revised:	Designer: H.H.Chiang / Structure Numbers: WALL-E-17-EE	19339
GROUND ENGINEERING / TSIOUVARAS SIMMONS HOLDERNESS CONSULTING ENGINEERS			Void:	Detailer: J.Arthurs / Sheet Subset: Wall / Subset Sheets: W-6 of 32	Sheet Number 104

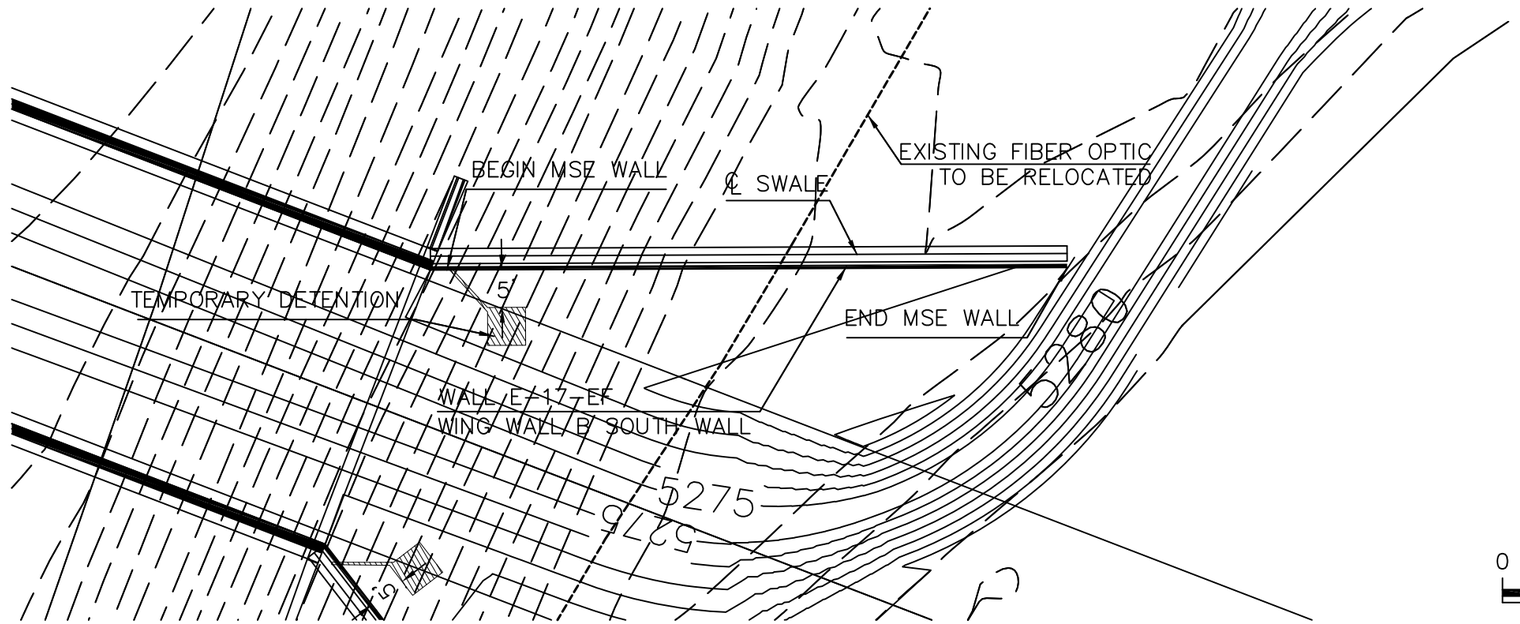

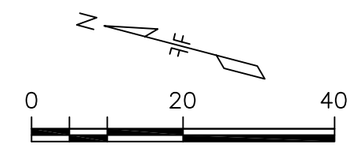

SCALE: 1" = 20'

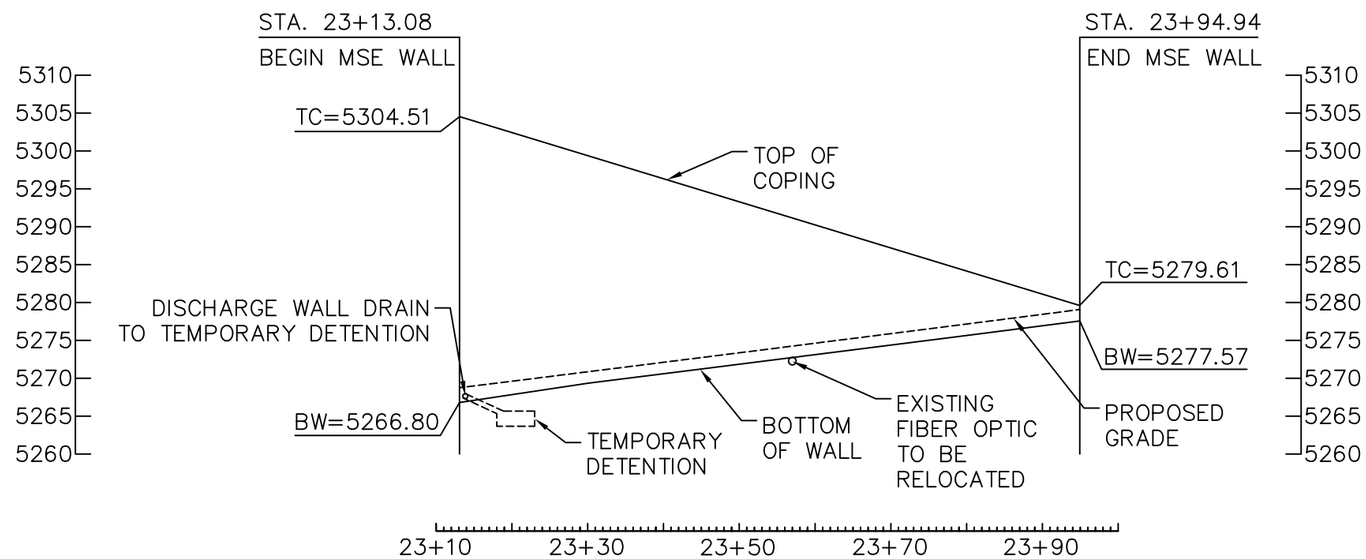

WING WALL B SOUTH (E-174-EF)
STA. 23+10.91 TO 23+94.94

NOTE: CONTRACTOR SHALL FIELD ADJUST BEGIN/END WALL STATIONING AS NEEDED

RFC02 JUNE, 2015 (REVIEW)

Print Date: 05/04/2015	Sheet Revisions	Colorado Department of Transportation	As Constructed	I-70 OVER HAVANA STREET DESIGN-BUILD
File Name: 15-3500CWP&P	Date: / Comments / Init.	4670 N. Holly Denver, CO 80216 Phone: FAX: 303-398-6781	No Revisions:	WING WALL B SOUTH PLAN AND PROFILE
Horiz. Scale: As Noted Vert. Scale: As Noted		Region 1 DK	Revised:	Designer: H.H.Chiang / Structure Numbers: WALL-E-17-EF
GROUND ENGINEERING / TSIOUVARAS SIMMONS HOLDERNESS CONSULTING ENGINEERS			Void:	Detailer: J.Arthurs / Sheet Subset: Wall / Subset Sheets: W-7 of 32

Project No./Code: FBR 0704-230
19339
Sheet Number 105

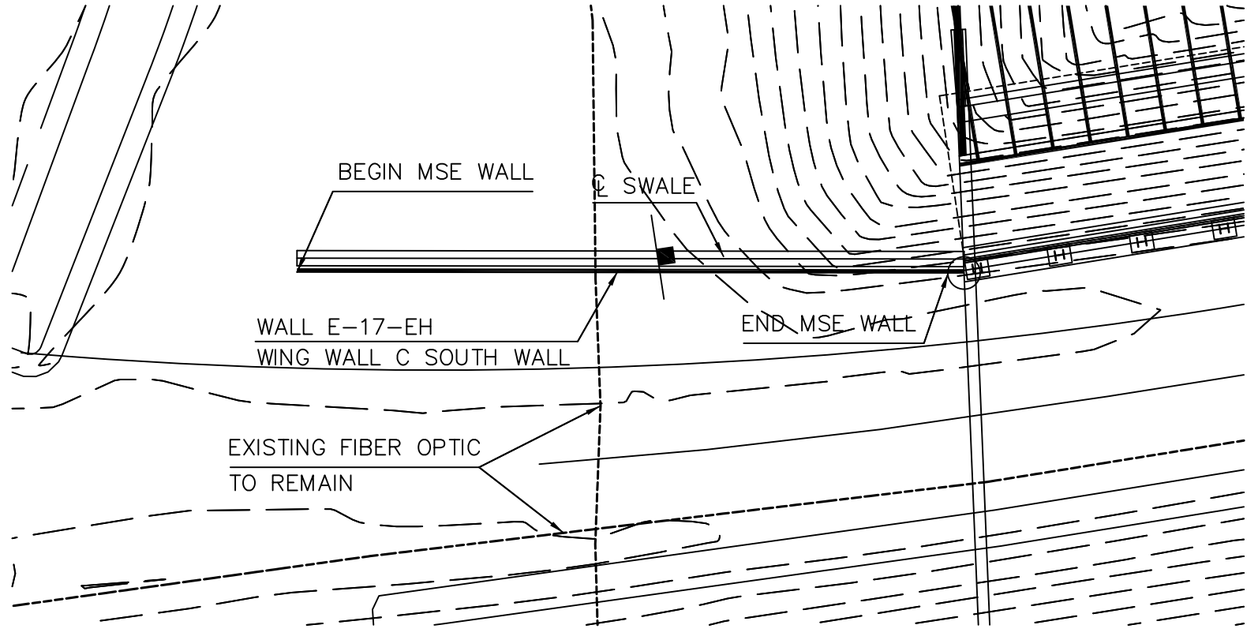

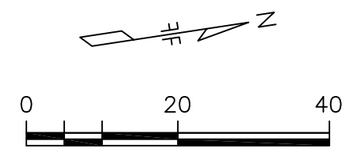

SCALE: 1" = 20'

NOTE: CONTRACTOR SHALL FIELD ADJUST BEGIN/END WALL STATIONING AS NEEDED

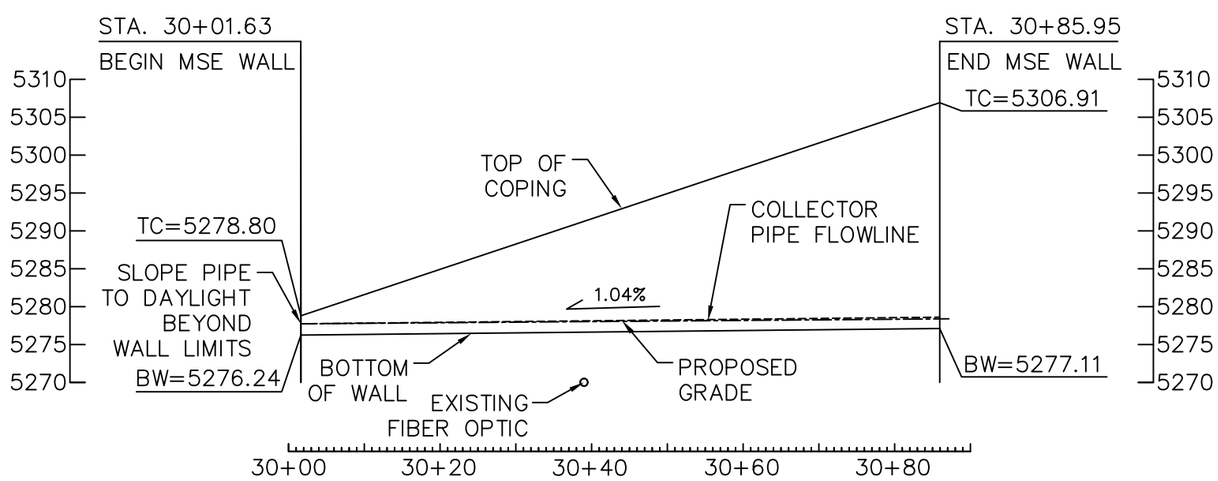

WING WALL C SOUTH (E-17-EH)
STA. 30+01.63 TO 30+87.16

RFC02 JUNE, 2015 (REVIEW)

Print Date: 05/04/2015	Sheet Revisions	Colorado Department of Transportation	As Constructed	I-70 OVER HAVANA STREET DESIGN-BUILD	Project No./Code
File Name: 15-3500CWP&P	Date: / Comments / Init.	4670 N. Holly Denver, CO 80216 Phone: FAX: 303-398-6781	No Revisions:	WING WALL C SOUTH PLAN AND PROFILE	FBR 0704-230
Horiz. Scale: As Noted Vert. Scale: As Noted		Region 1 DK	Revised:	Designer: H.H.Chiang / Structure Numbers: WALL-E-17-EH	19339
GROUND ENGINEERING / TSIOUVARAS SIMMONS HOLDERNESS CONSULTING ENGINEERS			Void:	Detailer: J.Arthurs / Sheet Subset: Wall / Subset Sheets: W-8 of 32	Sheet Number 106

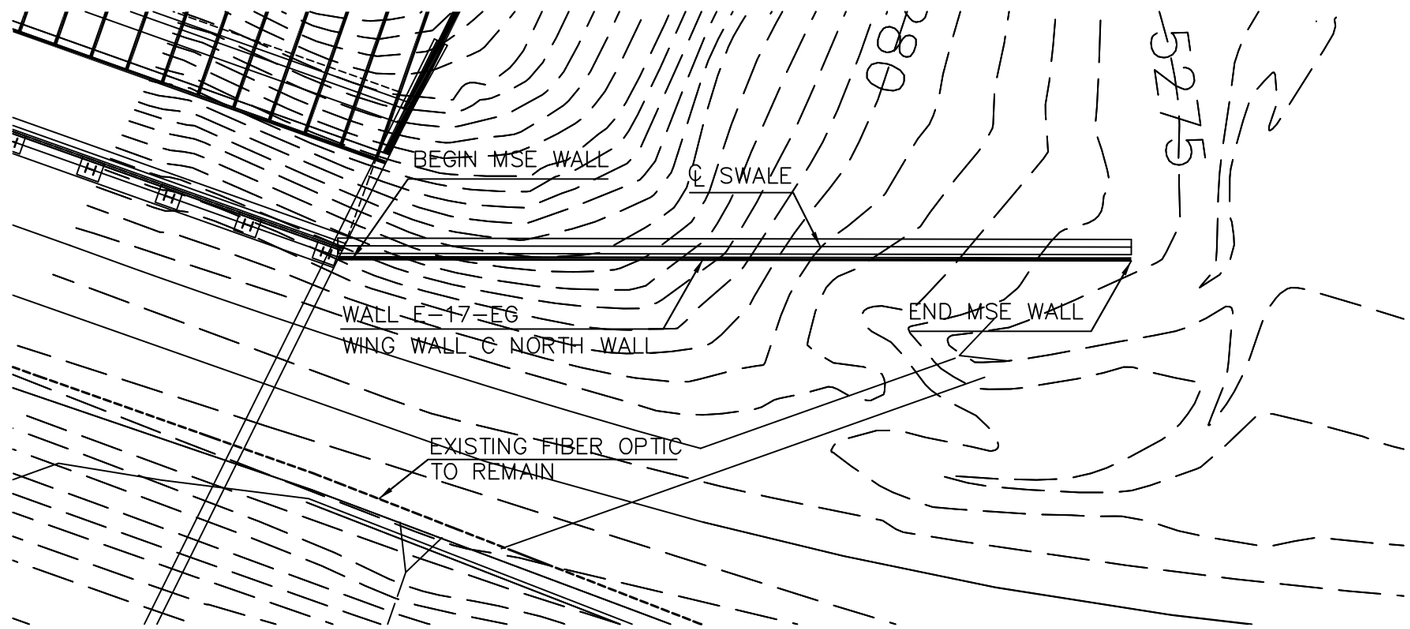

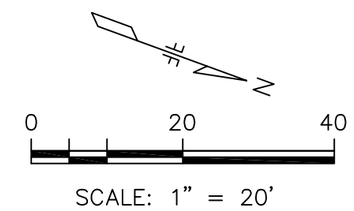

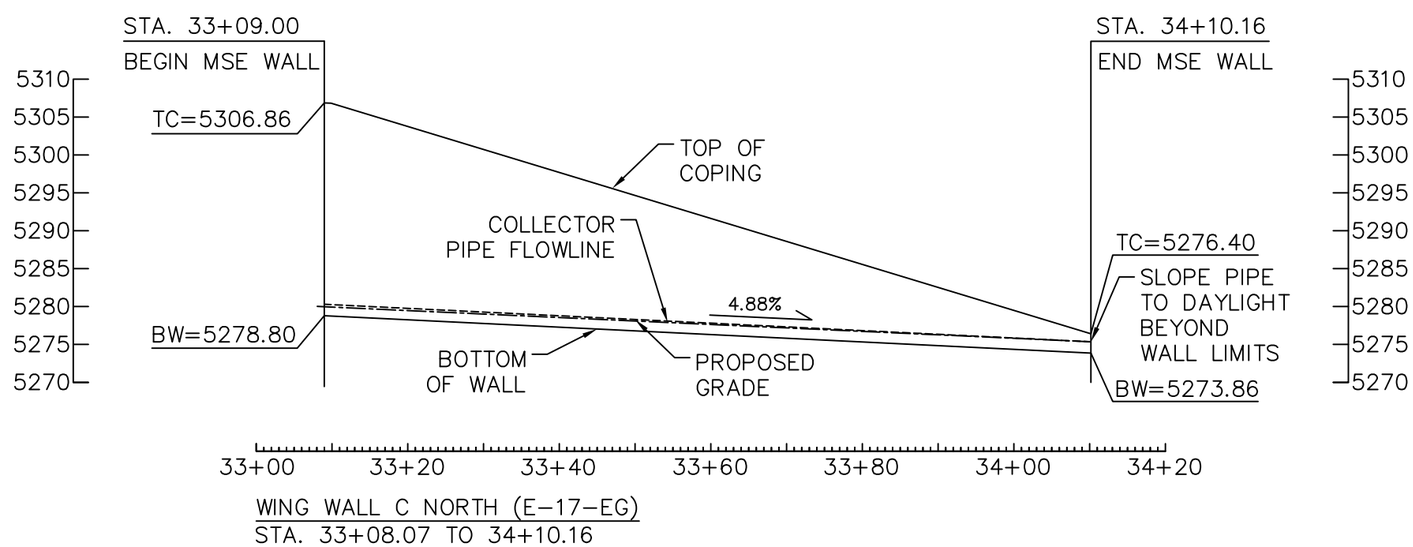

NOTE: CONTRACTOR SHALL FIELD ADJUST BEGIN/END WALL STATIONING AS NEEDED

RFC02 JUNE, 2015 (REVIEW)

Print Date: 05/04/2015	Sheet Revisions	Colorado Department of Transportation	As Constructed	I-70 OVER HAVANA STREET DESIGN-BUILD	Project No./Code
File Name: 15-3500CWP&P	Date: / Comments / Init.	4670 N. Holly Denver, CO 80216 Phone: FAX: 303-398-6781	No Revisions:	WING WALL C NORTH PLAN AND PROFILE	FBR 0704-230
Horiz. Scale: As Noted Vert. Scale: As Noted		Region 1 DK	Revised:	Designer: H.H.Chiang / Structure Numbers: WALL-E-17-EG	19339
GROUND ENGINEERING / TSIOUVARAS SIMMONS HOLDERNESS CONSULTING ENGINEERS			Void:	Detailer: J.Arthurs / Sheet Subset: Wall / Subset Sheets: W-9 of 32	Sheet Number 107

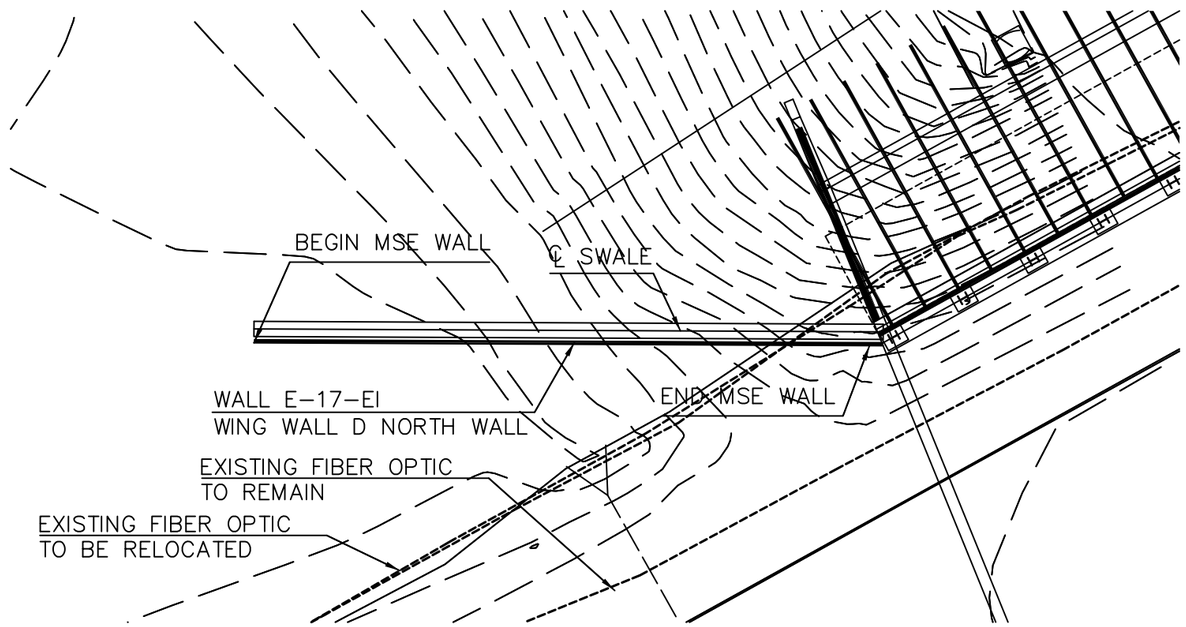

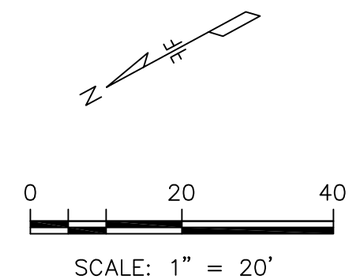

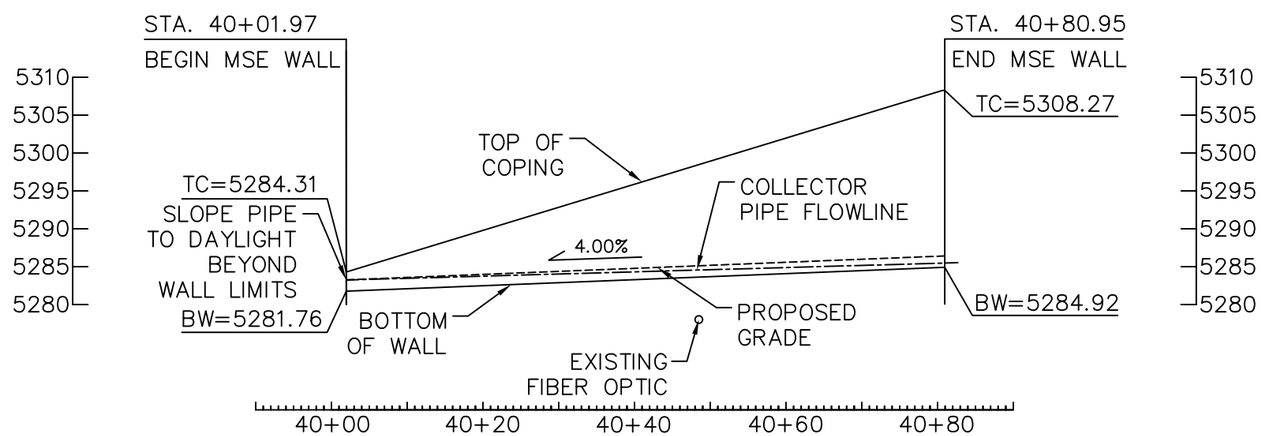

WING WALL D NORTH (E-17-EI)
STA. 40+01.97 TO 40+82.68

NOTE: CONTRACTOR SHALL FIELD ADJUST BEGIN/END WALL STATIONING AS NEEDED

RFC02 JUNE, 2015 (REVIEW)

Print Date: 05/04/2015	Sheet Revisions	Colorado Department of Transportation	As Constructed	I-70 OVER HAVANA STREET DESIGN-BUILD	Project No./Code
File Name: 15-3500CWP&P	Date: / Comments / Init.	4670 N. Holly Denver, CO 80216 Phone: FAX: 303-398-6781	No Revisions:	WING WALL D NORTH PLAN AND PROFILE	FBR 0704-230
Horiz. Scale: As Noted Vert. Scale: As Noted		Region 1 DK	Revised:	Designer: H.H.Chiang / Structure Numbers: WALL-E-17-EI	19339
GROUND ENGINEERING / TSIOUVARAS SIMMONS HOLDERNESS CONSULTING ENGINEERS			Void:	Detailer: J.Arthurs / Sheet Subset: Wall / Subset Sheets: W-10 of 32	Sheet Number 108

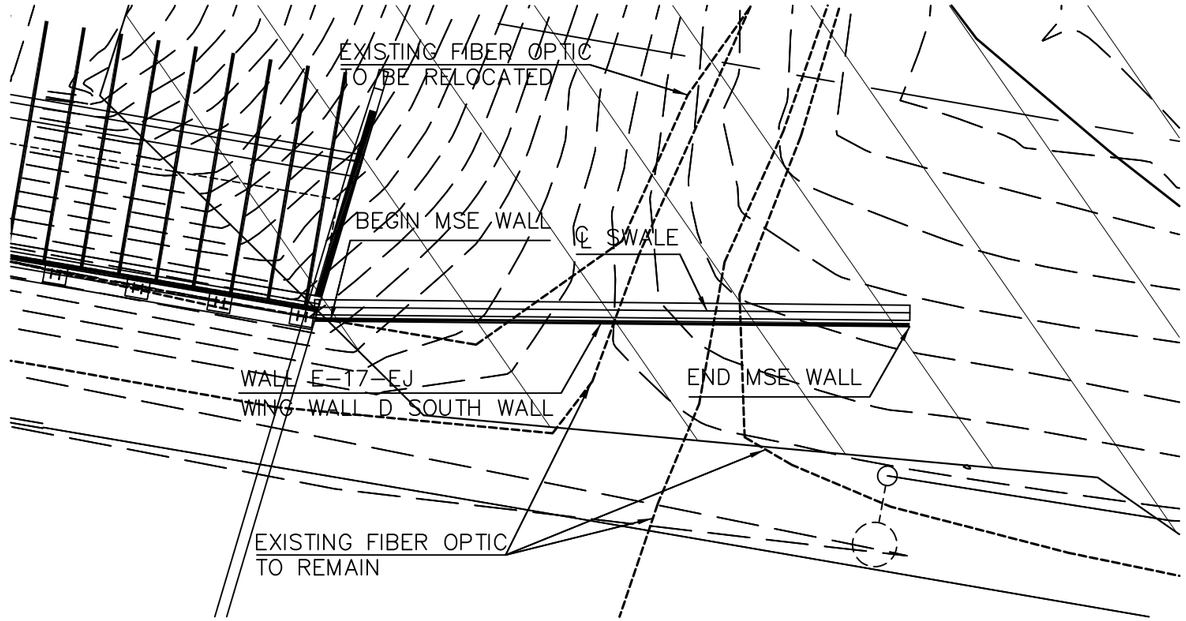

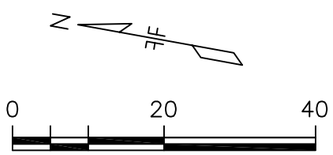

SCALE: 1" = 20'

NOTE: CONTRACTOR SHALL FIELD ADJUST BEGIN/END WALL STATIONING AS NEEDED

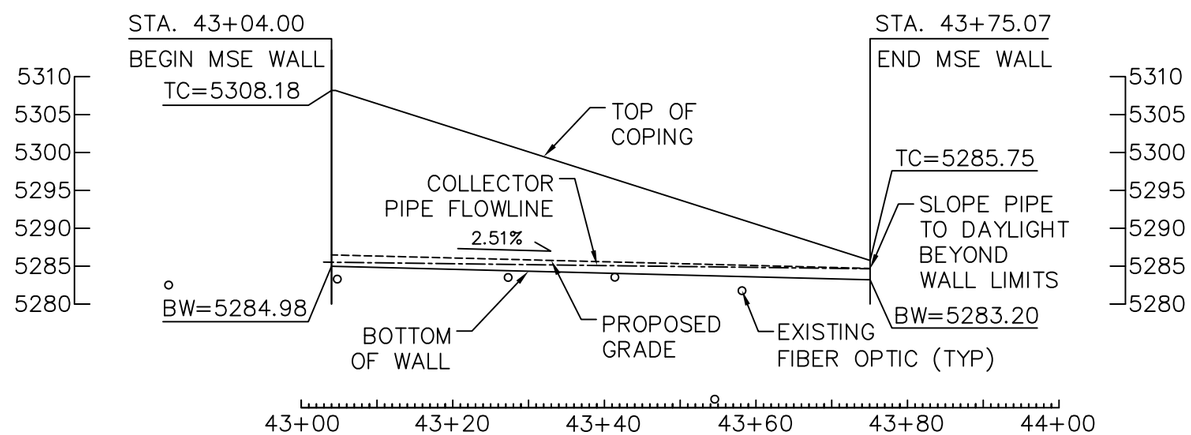

WING WALL D SOUTH (E-17-EJ)
STA. 43+02.95 TO 43+75.07

RFC02 JUNE, 2015 (REVIEW)

Print Date: 05/04/2015	Sheet Revisions	Colorado Department of Transportation	As Constructed	I-70 OVER HAVANA STREET DESIGN-BUILD	Project No./Code
File Name: 15-3500CWP&P	Date: / Comments / Init.	4670 N. Holly Denver, CO 80216 Phone: FAX: 303-398-6781	No Revisions:	WING WALL D SOUTH PLAN AND PROFILE	FBR 0704-230
Horiz. Scale: As Noted Vert. Scale: As Noted		Region 1 DK	Revised:	Designer: H.H.Chiang / Structure Numbers: WALL-E-17-EJ	19339
GROUND ENGINEERING / TSIOUVARAS SIMMONS HOLDERNESS CONSULTING ENGINEERS			Void:	Detailer: J.Arthurs / Sheet Subset: Wall / Subset Sheets: W-11 of 32	Sheet Number 109

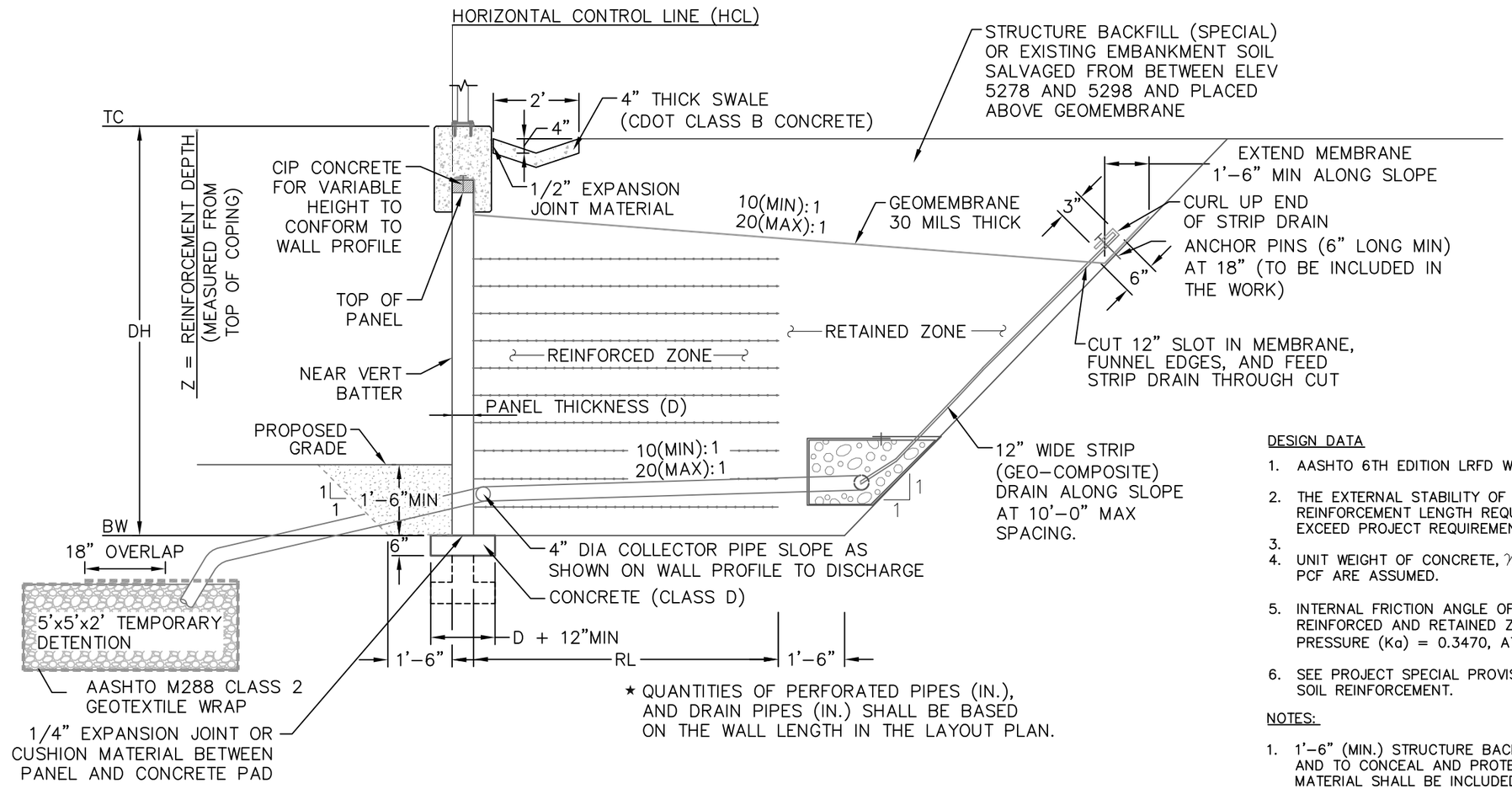

★ QUANTITIES OF PERFORATED PIPES (IN.), AND DRAIN PIPES (IN.) SHALL BE BASED ON THE WALL LENGTH IN THE LAYOUT PLAN.

TYPICAL CONCRETE PANEL FACING MSE WALL SECTION

NTS

DESIGN DATA

1. AASHTO 6TH EDITION LRFD WITH CURRENT INTERIMS.
2. THE EXTERNAL STABILITY OF THE FOUNDATION OF THE WALL AND THE IDENTIFIED REINFORCEMENT LENGTH REQUIREMENTS WERE CHECKED AND DEEMED TO MEET OR EXCEED PROJECT REQUIREMENTS.
3.
4. UNIT WEIGHT OF CONCRETE, γ_{conc} = 150 PCF AND UNIT WEIGHT OF SOIL, γ_{soil} = 135 PCF ARE ASSUMED.
5. INTERNAL FRICTION ANGLE OF SOIL FOR STRUCTURE BACKFILL (SPECIAL) AT BOTH REINFORCED AND RETAINED ZONE IS ASSUMED TO BE: Φ =29°, ACTIVE EARTH PRESSURE (Ka) = 0.3470, AT REST EARTH PRESSURE (K_o) = 0.5152.
6. SEE PROJECT SPECIAL PROVISIONS FOR THE SACRIFICIAL THICKNESS OF METALLIC SOIL REINFORCEMENT.

NOTES:

1. 1'-6" (MIN.) STRUCTURE BACKFILL (CLASS 2) IS REQUIRED FOR EROSION CONTROL AND TO CONCEAL AND PROTECT A STEPPED LEVELING PAD. THE COST FOR THIS MATERIAL SHALL BE INCLUDED IN THE COST FOR STRUCTURE BACKFILL (SPECIAL).
2. GEOMEMBRANE AND PIPE COLLECTOR ARE REQUIRED.
3. THE GEOMEMBRANE SHALL BE INSTALLED WITH A CONSTANT SLOPE FROM THE FACING PANEL ALL THE WAY TO THE BACK IN CONJUNCTION WITH THE GEO-COMPOSITE DOWN DRAINS AT AND ALONG THE TEMPORARY CUT SLOPE. THE GEO-COMPOSITE DRAINS THAT CONNECT TO THE WATER COLLECTOR SYSTEM SHALL BE MINIMUM 12" IN WIDTH AT 10' MAXIMUM SPACING.
4. ALL PIPES AND JOINTS SHALL BE CORRUGATED H.D.P.E.
5. ONE SIDE TEMPORARY FORMING BOARD IS REQUIRED TO BUILD DRAIN DETAIL. THE FILTER MATERIAL SHALL BE WRAPPED WITH EROSION CONTROL GEOTEXTILES (CLASS 2).
6. THE CONNECTORS BETWEEN THE PRECAST PANELS AND THE SOIL REINFORCEMENTS SHALL BE PROVIDED BY THE CONTRACTOR ACCORDING TO THE PROJECT SPECIFICATION.
7. ALL CONCRETE REINFORCEMENT SHALL BE PLAIN STEEL, UNLESS NOTED OTHERWISE.

RFC02 JUNE, 2015 (REVIEW)

Print Date: 05/04/2015	Sheet Revisions	Colorado Department of Transportation	As Constructed
File Name: 15-3500CBWDTLS	Date: / Comments / Init.	4670 N. Holly, Denver, CO 80216	No Revisions:
Horiz. Scale: As Noted Vert. Scale: As Noted		Phone: FAX: 303-398-6781	Revised:
GROUND ENGINEERING / TSIOUVARAS SIMMONS HOLDERNESS CONSULTING ENGINEERS		Region 1 DK	Void:

I-70 OVER HAVANA STREET DESIGN-BUILD			Project No./Code
TYPICAL CONCRETE PANEL FACING MSE WALL SECTION			FBR 0704-230
Designer: H.H.Chiang	Structure Numbers	WALL-E-17-EC TO WALL-E-17-EJ	19339
Detailer: J.Arthurs			
Sheet Subset: Wall	Subset Sheets: W-12 of 32		Sheet Number 110

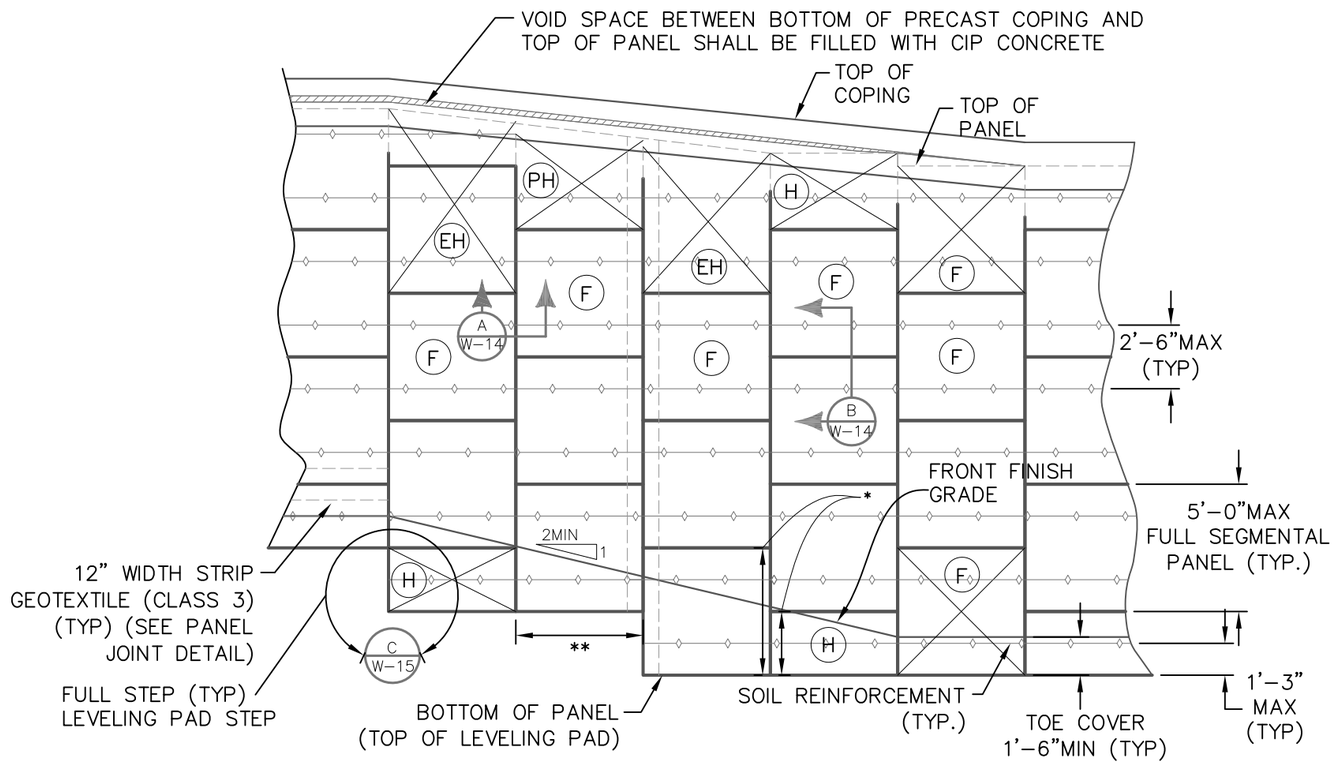

TYPICAL WALL ELEVATION

NTS

(F) : FULL SIZE SEGMENTAL PANEL (5'-0" HEIGHT)
(H) : HALF HEIGHT SEGMENTAL PANEL (2'-6" HEIGHT)
(PH) : PARTIAL HEIGHT SEGMENTAL PANEL
(EH) : EXTENDED HEIGHT SEGMENTAL PANEL (TOP ROW PANEL SHALL BE 7'-0" (MAX.) HEIGHT)
* BOTTOM ROW PANEL SHALL BE (F) OR (H)
** WIDTH OF PANEL SHALL BE 5'-0"MIN OR 10'-0"MAX (TYP)

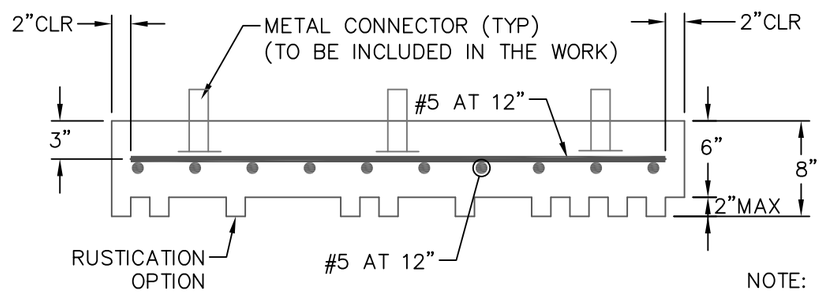

NOTE: PANEL REINFORCEMENT IN LOWEST 10' OF WALL SHALL BE HOT DIP GALVANIZED

PRECAST PANEL REINFORCEMENT PATTERN SECTION

NTS

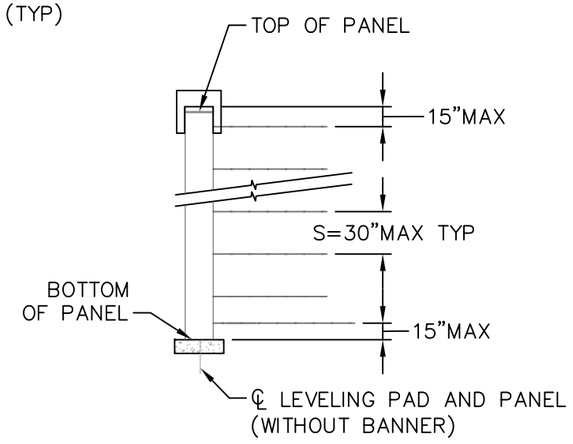

SOIL REINFORCEMENT PATTERN

NTS

RFC02 JUNE, 2015 (REVIEW)

Print Date: 05/04/2015	Sheet Revisions	Colorado Department of Transportation	As Constructed	I-70 OVER HAVANA STREET DESIGN-BUILD TYPICAL CONCRETE PANEL FACING MSE WALL DETAILS 1	Project No./Code
File Name: 15-3500CBWDTLS	Date: / Comments / Init.	4670 N. Holly Denver, CO 80216 Phone: FAX: 303-398-6781	No Revisions:	Designer: H.H.Chiang / Structure Numbers: WALL-E-17-EC TO WALL-E-17-EJ	FBR 0704-230
Horiz. Scale: As Noted Vert. Scale: As Noted		Region 1 DK	Revised:	Detailer: J.Arthurs	19339
GROUND ENGINEERING / TSIOUVARAS SIMMONS HOLDERNESS CONSULTING ENGINEERS			Void:	Sheet Subset: Wall / Subset Sheets: W-13 of 32	Sheet Number 111

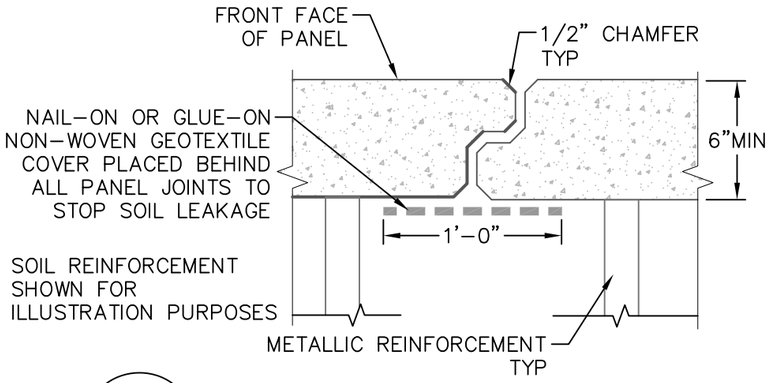

A / W-13 TYPICAL VERTICAL PANEL JOINT DETAILS

NTS

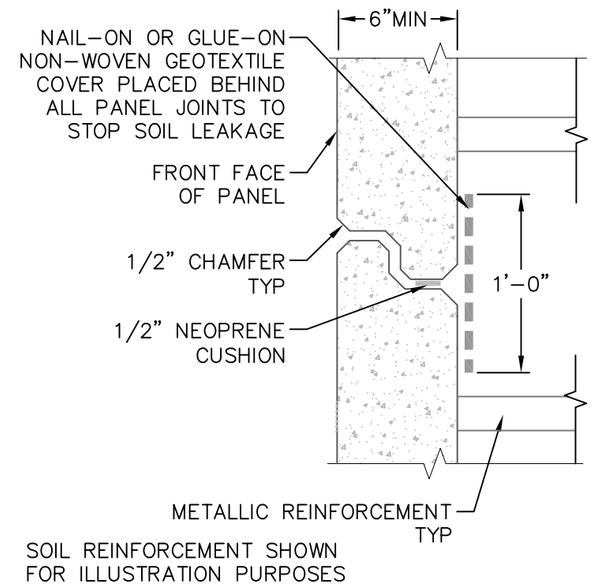

B / W-13 TYPICAL HORIZONTAL PANEL JOINT DETAILS

NTS

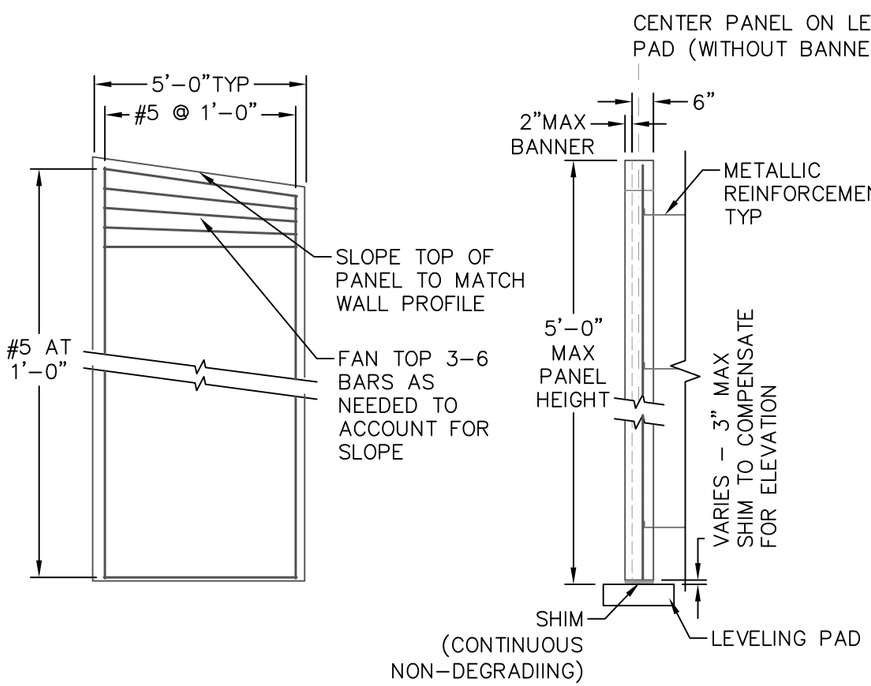

TYPICAL PRECAST PANEL DETAILS

NTS

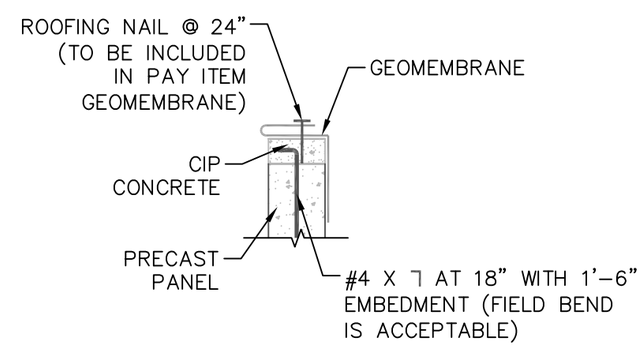

TYPICAL ROOFING NAIL DETAILS

NTS

NOTES:

1. PANEL LIFTING HOOK EMBEDMENTS AND RELATED HARDWARE SHALL BE FURNISHED, SIZED, AND PLACED BY FABRICATOR (PER CONTRACTOR'S DESIGN) FOR EACH INDIVIDUAL PANEL.
2. CONTRACTOR MAY SUBMIT ALTERNATE PANEL WITH APPROVAL OF THE ENGINEER AT NO ADDITIONAL COST TO THE PROJECT.
3. THE ACCEPTABLE PANEL JOINT MATERIAL BETWEEN PANELS SHALL BE PROPOSED BY THE CONTRACTOR WITH APPROVAL OF THE ENGINEER, AND SHALL BE INCLUDED IN THE COST OF ITEM 504 PRECAST PANEL FACING.
4. TEST PANEL AS SPECIFIED IN SPECIFICATION SHALL BE INCLUDED IN COST OF ITEM 504 PRECAST PANEL FACING PROVIDED BY THE CONTRACTOR.
5. 2" CLR FOR REBAR IS TYPICAL, EXCEPT AS NOTED.
6. SAWING OF PANELS IS ACCEPTABLE IN AREAS TO MEET EXISTING GROUND IF NEEDED WITH APPROVAL OF THE ENGINEER.
7. THE TOLERANCE ON PANEL THICKNESS SHALL NOT EXCEED 1 ,".
8. TOTAL SERVICE LOADS APPLIED TO ANY PANEL DURING CONSTRUCTION SHALL NOT EXCEED 117 PSF.
9. ANY FLEXURAL CRACKS, SAGS, OR CAMBERS GREATER THAN 0.5" WILL BE CONSIDERED EVIDENCE OF MISHANDLING, OVERLOADING, OR EXCEEDING ALLOWABLE TOLERANCES, AND MAY BE CAUSE FOR REJECTING PANELS AT THE ENGINEER'S DISCRETION.
10. CARE MUST BE TAKEN TO ENSURE PROPER CLEANING OF CONSTRUCTION DEBRIS OFF THE TOPS OF THE PANELS AND CONSOLIDATION OF CONCRETE MORTAR UNDER THE EDGES OF THE PANELS. WATER, DIRT OR OTHER DEBRIS ON TOP OF THE PANELS WILL INHIBIT THE BOND OF THE CAST-IN-PLACE CONCRETE. IT IS ALSO IMPORTANT THAT ADEQUATE SPACE (MIN. 1" X 2") IS PROVIDED FOR THE CONCRETE TO FILL THE SPACE UNDER THE PANELS WHERE THE SLAB CONCRETE IS PLACED. PANEL LENGTHS AND WIDTH SHALL BE DETERMINED BY THE CONTRACTOR AND SHOWN ON THE SHOP PLANS.
11. THE CONTRACTOR IS RESPONSIBLE FOR THE STABILITY OF THE PANELS DURING SHIPPING, DELIVERY, INSPECTION, AND ANYTIME DURING CONSTRUCTION. ERECTED PANELS SHALL BE UNIFORMLY SUPPORTED ALONG THE LENGTH OF THE PANEL. THE CONTRACTOR SHALL PROVIDE GEOGRID INSTALLATION, LIFTING AND ERECTION PLAN TO THE ENGINEER FOR INFORMATION ONLY AT NO ADDITIONAL COST.
12. PANEL SUPPLIER MAY SUBMIT ALTERNATIVE HORIZONTAL AND/OR VERTICAL JOINT DETAIL IN SHOP DRAWING FOR ENGINEER'S APPROVAL. THE STRENGTH OF THE PROPOSED ALTERNATE SHALL BE EQUAL OR EXCEED SHOWN IN THE SECTION A AND B.

RFC02 JUNE, 2015 (REVIEW)

Print Date: 05/04/2015	Sheet Revisions	Colorado Department of Transportation	As Constructed	I-70 OVER HAVANA STREET DESIGN-BUILD	Project No./Code
File Name: 15-3500CBWDTLS	Date: / Comments / Init.	4670 N. Holly Denver, CO 80216	No Revisions:	TYPICAL CONCRETE PANEL FACING MSE WALL DETAILS 2	FBR 0704-230
Horiz. Scale: As Noted / Vert. Scale: As Noted		Phone: FAX: 303-398-6781	Revised:	Designer: H.H.Chiang / Structure Numbers: WALL-E-17-EC TO WALL-E-17-EJ	19339
GROUND ENGINEERING / TSIOUVARAS SIMMONS HOLDERNESS CONSULTING ENGINEERS		Region 1 DK	Void:	Detailer: J.Arthurs / Sheet Subset: Wall / Subset Sheets: W-14 of 32	Sheet Number 112

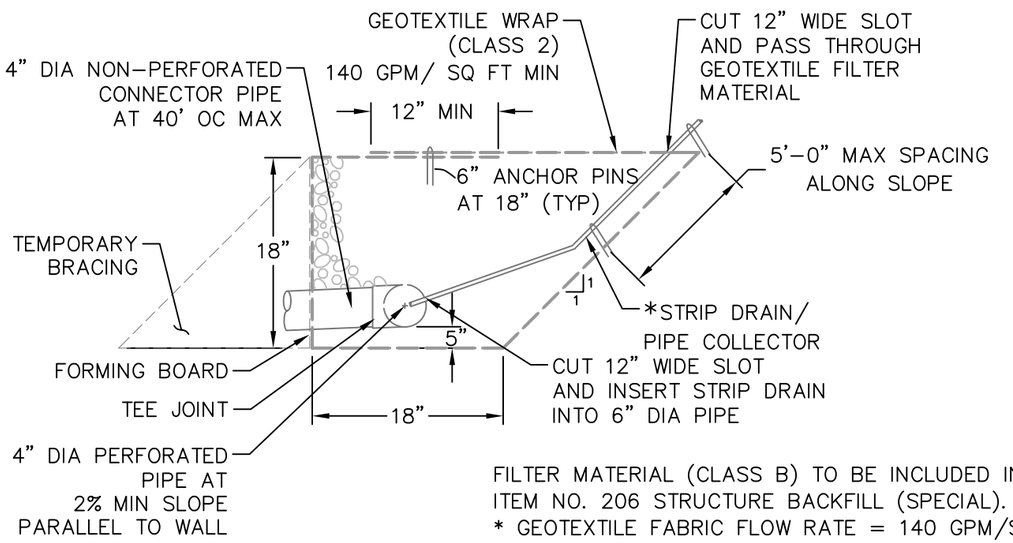

FILTER MATERIAL (CLASS B) TO BE INCLUDED IN ITEM NO. 206 STRUCTURE BACKFILL (SPECIAL).
* GEOTEXTILE FABRIC FLOW RATE = 140 GPM/SF MIN AND CORE FLOW RATE OF 21 GPM/FT MIN

TYPICAL DRAIN DETAILS

NTS

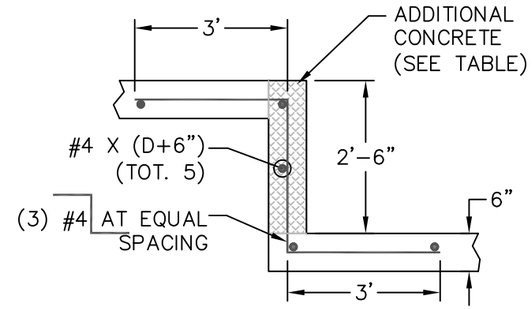

C / W-13 TYPICAL STEP DETAILS

NTS

	ITEM NO.	DESCRIPTIONS	UNIT	QUANTITIES
LEVELING PAD	601	CONCRETE CLASS D	CY/FT	0.028
FULL STEP	601	REINFORCING STEEL	LB/STEP	16.4
	602	CONCRETE CLASS D	CY/STEP	0.069

BASED ON 6" NOMINAL PANEL DEPTH (D)

LEVELING PAD AND STEP QUANTITIES

(For Information only)

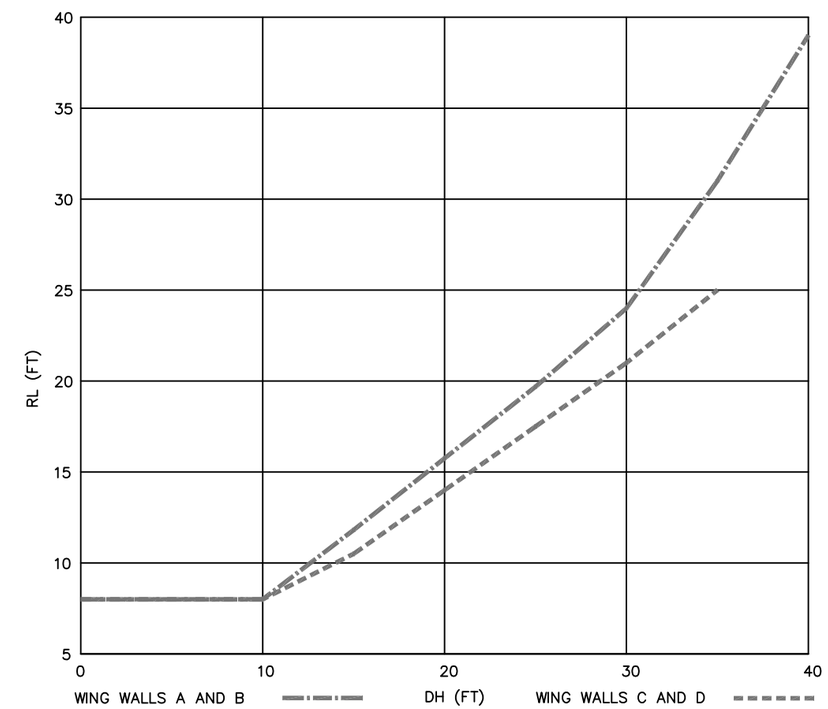

NOTE: FOR WALL SEGMENTS WITH DESIGN HEIGHTS LESS THAN 8 FEET, THE LENGTH OF THE TOP LAYER OF SOIL REINFORCEMENT SHALL BE 8 FEET. ALL OTHER LAYERS SHALL BE THE SAME LENGTH, WITH LENGTH EQUAL TO DESIGN HEIGHT TO A MINIMUM OF 6 FEET.

MINIMUM REINFORCEMENT LENGTH CHART

NTS

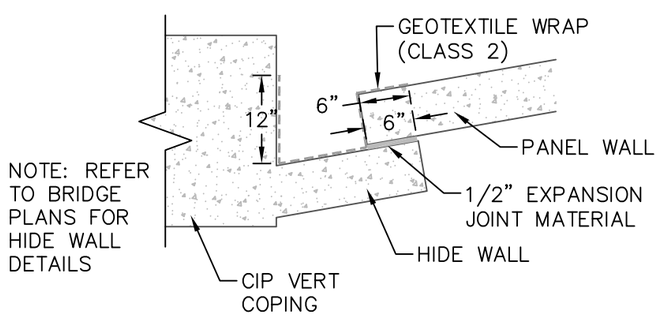

TYPICAL HIDE WALL AT SMSE DETAILS

NTS

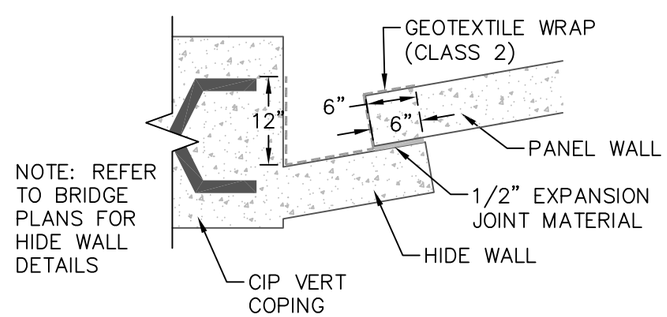

TYPICAL HIDE WALL AT SHEET PILE DETAILS

NTS

RFC02 JUNE, 2015 (REVIEW)

Print Date: 05/04/2015	Sheet Revisions	Colorado Department of Transportation	As Constructed
File Name: 15-3500CBWDTLS	Date: / Comments / Init.	4670 N. Holly Denver, CO 80216 Phone: FAX: 303-398-6781	No Revisions:
Horiz. Scale: As Noted Vert. Scale: As Noted		Region 1 DK	Revised:
GROUND ENGINEERING / TSIOUVARAS SIMMONS HOLDERNESS CONSULTING ENGINEERS			Void:

I-70 OVER HAVANA STREET DESIGN-BUILD
TYPICAL CONCRETE PANEL FACING MSE WALL DETAILS 3

Designer:	H.H.Chiang	Structure Numbers	WALL-E-17-EC TO WALL-E-17-EJ
Detailer:	J.Arthurs		
Sheet Subset:	Wall	Subset Sheets: W-15 of 32	

Project No./Code: FBR 0704-230

19339

Sheet Number 113

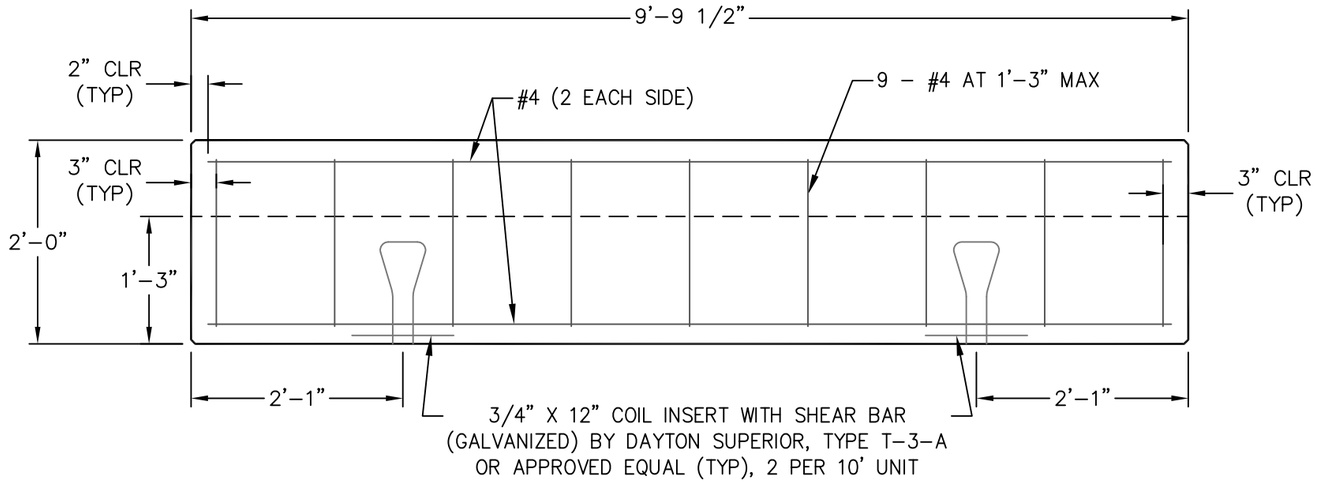

TYPICAL BACK FACE OF COPING DETAILS

NTS

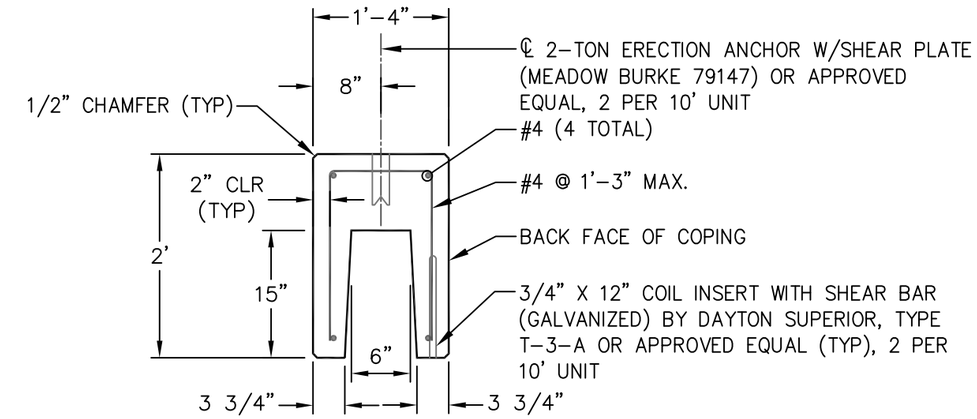

TYPICAL PRECAST COPING DETAILS

NTS

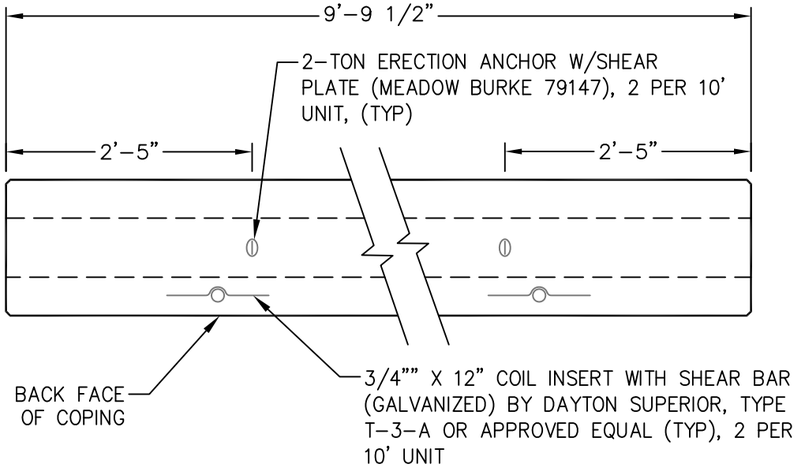

TYPICAL COPING PLAN VIEW DETAILS

NTS

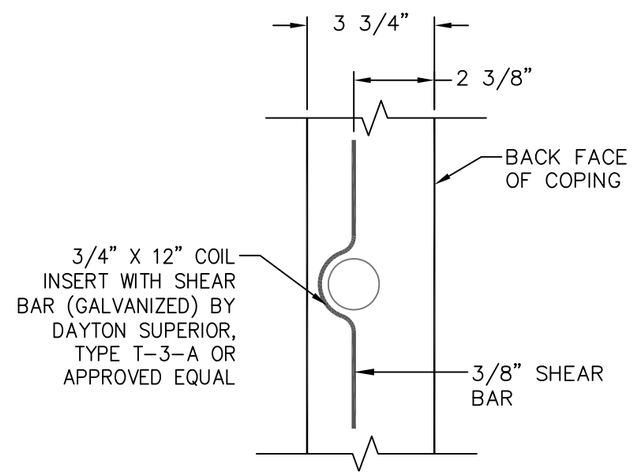

TYPICAL COIL INSERT DETAILS

NTS

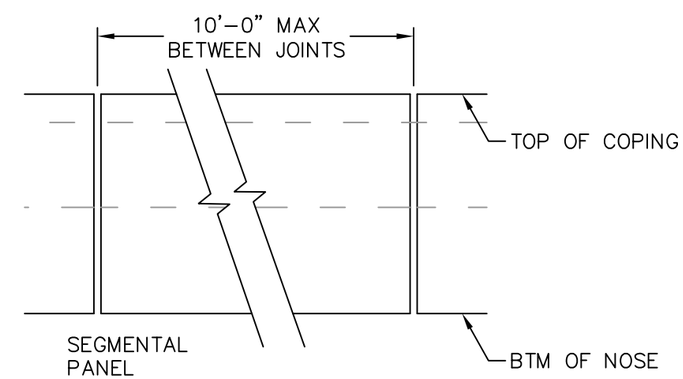

TYPICAL COPING EXPANSION JOINT DETAILS

NTS

RFC02 JUNE, 2015 (REVIEW)

Print Date: 05/04/2015	Sheet Revisions			Colorado Department of Transportation	As Constructed	I-70 OVER HAVANA STREET DESIGN-BUILD	Project No./Code
File Name: 15-3500CBWDTLS	Date:	Comments	Init.	4670 N. Holly Denver, CO 80216 Phone: FAX: 303-398-6781	No Revisions:	TYPICAL PRECAST COPING SECTIONS AND DETAILS	FBR 0704-230
Horiz. Scale: As Noted Vert. Scale: As Noted				Region 1 DK	Revised:	Designer: H.H.Chiang / Structure Numbers WALL-E-17-EC TO WALL-E-17-EJ	19339
GROUND ENGINEERING / TSIOUVARAS SIMMONS HOLDERNESS CONSULTING ENGINEERS					Void:	Detailer: J.Arthurs / Sheet Subset: Wall / Subset Sheets: W-16 of 32	Sheet Number 114

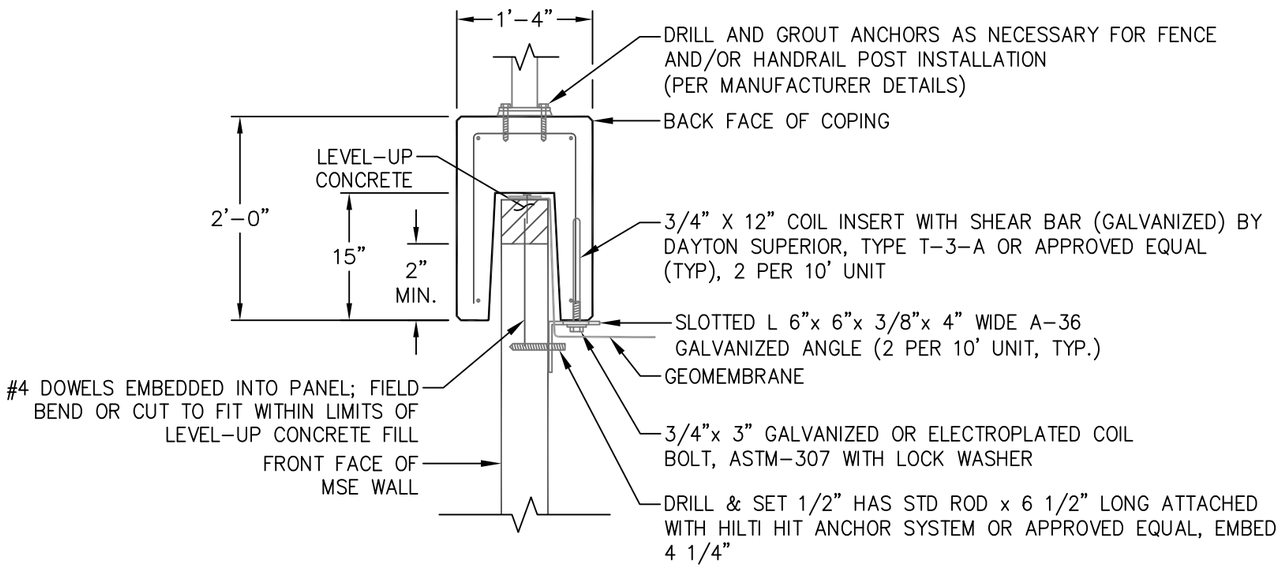

TYPICAL PRECAST COPING INSTALLATION DETAILS

NTS

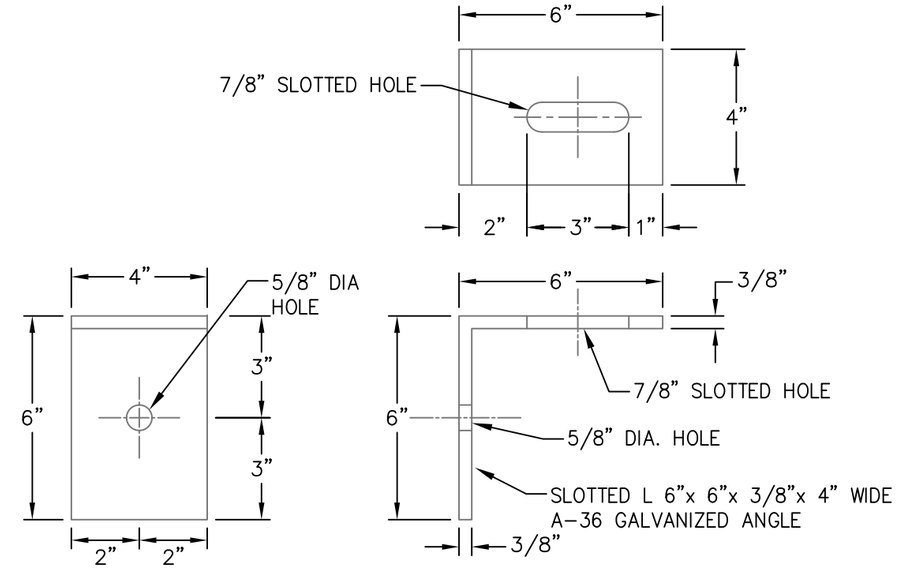

TYPICAL GALVANIZED ANGLE DETAILS

NTS

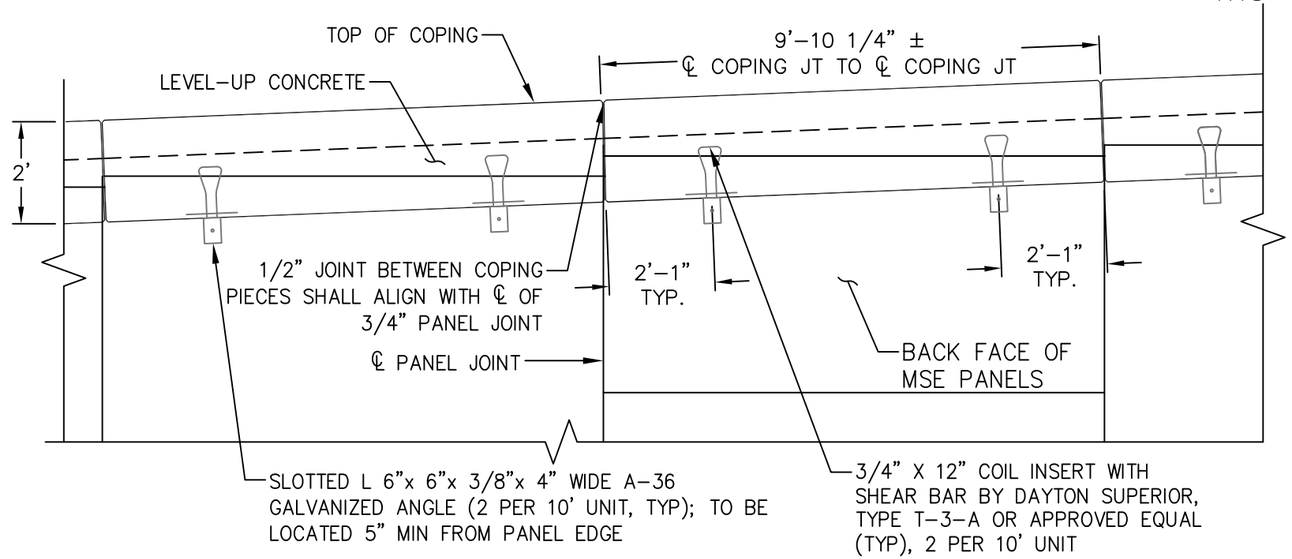

TYPICAL PARTIAL ELEVATION – BACK FACE OF PRECAST COPING INSTALLATION

NTS

RFC02 JUNE, 2015 (REVIEW)

Print Date: 05/04/2015	Sheet Revisions	Colorado Department of Transportation	As Constructed
File Name: 15-3500CBWDTLS	Date: / Comments / Init.	4670 N. Holly Denver, CO 80216 Phone: FAX: 303-398-6781	No Revisions:
Horiz. Scale: As Noted Vert. Scale: As Noted		Region 1 DK	Revised:
GROUND ENGINEERING / TSIOUVARAS SIMMONS HOLDERNESS CONSULTING ENGINEERS			Void:

I-70 OVER HAVANA STREET DESIGN-BUILD

TYPICAL COPING INSTALLATION DETAILS

Designer: H.H.Chiang	Structure Numbers	WALL-E-17-EC TO WALL-E-17-EJ	Project No./Code FBR 0704-230
Detailer: J.Arthurs			19339
Sheet Subset: Wall	Subset Sheets: W-17 of 32		Sheet Number 115

General Notes - Wire Facing MSE Walls

1. General

1.1 The drawings presented herein are based on the provided MicroStation Design / Build Plans, dated April 30, 2015, and Draft Rocksol Geotechnical Report Project No. 304.01, dated May 29, 2013, and Ground Engineering Geotechnical Report Job No. 15-3500A dated May 4, 2015.

1.2 Location of the proposed temporary shoring shall be based on the project plans and actual conditions in the field. Contractor's engineer must review these drawings, specifically with respect to elevations.

1.3 A survey of each shoring alignment is required prior to construction to verify the existing and proposed grades. Any deviation from the assumed grades or alignment requires re-evaluation by GROUND to ensure structural adequacy.

1.4 The Contractor shall verify the location of proposed and existing underground features prior to any grading or excavation.

2. Materials

2.1 Wire forms shall be galvanized Terratrel L, Q, and P panels as specified on Sheet W-29.

2.2 Galvanized bolts, connector rods, and haripin connectors shall be as specified on Sheet W-29.

2.3 Reinforcement shall be galvanized metal straps as specified on Sheet W-29

2.4 Wire facing and strap reinforcement shall be stored and handled in accordance with manufacturer's recommendations.

2.5 Reinforced and retained backfill shall consist of imported granular soil with a minimum friction angle of 29 degrees, which shall be verified prior to and during construction.

2.6 Soil retention geotextile shall be as specified on Sheet W-31.

2.7 Filter fabric shall be AASHTO M288 Class 2 and shall be placed as shown on the drawings.

3. Excavation and Subgrade Preparation

3.1 The excavation shall be carried to the elevations and extents necessary to place strap reinforcement at the required lengths.

3.2 Temporary excavation slopes shall be graded in accordance with OSHA's Standard 1926 Subpart P.

3.3 The subgrade shall be prepared in accordance with the CDOT standard specifications and project specifications.

4. Construction

4.1 Place wire forms and reinforcing straps as indicated on the drawings and as outlined on Sheet W-31.

4.2 Place reinforcement and backfill as outlined in the construction sequence on Sheet W-31.

4.3 Only light weight hand-operated compaction equipment shall be used within 3 feet behind wire face, and compacted in thinner lifts.

4.4 Place and compact backfill in accordance with the project plans and specifications.

4.5 Backfill shall be placed in uniform lifts not exceeding 8 inches compacted.

4.6 Strap reinforcement shall be placed according to the drawings and manufacturer's recommendations.

4.7 Straps shall be continuous for their design embedment length. Spliced connections will not be allowed.

4.8 Refer to facing details for reinforcement separation requirements in conflict areas.

4.9 Any damage to the reinforcement or wire facing that affects the strength of the wall shall be replaced.

4.10 No changes to the reinforcement type, layout, length, or elevation shall be made without approval from the Design Engineer.

5. Drainage

5.1 An effort should be taken to keep the shoring system and the surrounding areas relatively dry during construction.

5.2 In no case shall surface runoff be allowed to enter the wall construction areas, or be ponded around the walls.

5.3 At the end of each construction day, the Contractor shall slope the last lift of reinforced backfill away from the wall facing to rapidly direct runoff away from the wall face.

6. Quality Assurance

6.1 The Owner shall retain a qualified engineer to provide quality assurance and testing services during construction and in accordance with the project documents.

7. Design Criteria

7.1 AASHTO LRFD Bridge Design Specifications, 2010.

7.2 Design soil parameters:

Material Type	Friction Angle (degrees)	Cohesion (psf)	Unit Weight (pcf)
Wall Backfill	29	0	135
On-site Soil / Fill	32	0	127

7.3 Long Term Design Strength (LTDS) of Straps

Criteria	Reduction Factor
Fy	0.75

7.4 Internal Stability

Criteria	Load Factor
Vertical Earth Pressure	1.35
Live Load Surcharge	1.75 *
Dead Load Surcharge	1.50 *

* Same for external stability

Reinforcement	Resistance Factor
Strength	0.75
Connection	0.75
Pullout	0.90

7.5 External Stability

Criteria	Load Factor
Horizontal Earth Pressure	1.50
Sliding and Eccentricity	1.00
Bearing Pressure	1.35

Stability Mode	Resistance Factor
Sliding	1.00
Bearing Capacity	0.65

8. Abbreviations

ABC	Aggregate base course
BG	Finish grade at bottom of wall
BWW	Bottom of wire wall
DH	Design height
DIA	Diameter
HMA	Hot mixed asphalt
MAX	Maximum
MIN	Minimum
NTS	Not to scale
OC	On centers
RL	Reinforcement length
STD	Standard
TG	Finish grade at top of wall
TWW	Top of wire wall
TYP	Typica
WW	Wire Wall

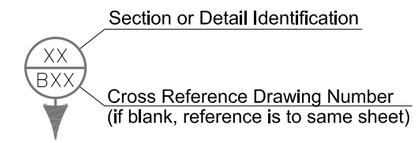

Know what's below. Call before you dig.

RFC02 JUNE, 2015 (REVIEW)

Print Date: 05/04/2015	Sheet Revisions			Colorado Department of Transportation	As Constructed
File Name: 15-3500CWNOTES	Date:	Comments	Init.	4670 N. Holly Denver, CO 80216 Phone: FAX: 303-398-6781	No Revisions:
Horiz. Scale: As Noted Vert. Scale: As Noted				Region 1 DK	Revised:
GROUND ENGINEERING / TSIOUVARAS SIMMONS HOLDERNESS CONSULTING ENGINEERS					Void:

I-70 OVER HAVANA STREET DESIGN-BUILD			Project No./Code
WIRE FACING MSE GENERAL NOTES			FBR 0704-230
Designer: H.H.Chiang	Structure Numbers	WALL-E-17-EK	19339
Detailer: C.Henderson		WALL-E-17-EL	
Sheet Subset: Wall	Subset Sheets: W-18 of 32		Sheet Number 116

Summary of Quantities - Weld Wire Wall

Item No.	Description	Unit	Wall C WALL-E-17-EK	Wall D WALL-E-17-EL
504	Strap Length	LF	20,806	8,265
504-04420	Welded Wire Panel	SF	5,094	2,070
206-00050	Panel Wall Backfill*	CY	4,420	1,668

* Includes Reinforced and retained backfill quantities.

RFC02 JUNE, 2015 (REVIEW)

General Notes - Soil Nail Walls

1. General

1.1 The drawings presented herein are based on the provided MicroStation Design / Build Plans, dated April 30, 2015, and Draft Rocksol Geotechnical Report Project No. 304.01, dated May 29, 2013, and Ground Engineering Geotechnical Report Job No. 15-3500A dated May 4, 2015.

1.2 Location of the proposed ground nailed retaining wall shall be based on the wall layout in the Project Documents.

1.3 The Contractor shall verify the location of proposed and existing underground features prior to any grading or excavation.

1.4 Locations and elevations of soil nail and wall drain shall be periodically verified during and at completion of construction.

2. Materials

2.1 Soil nails shall consist of epoxy coated No. 8, Grade 75, all thread bar.

2.2 Waler bars, bearing bars, and cantilever bars shall consist of No. 5, Grade 60 reinforcing bars.

2.3 Welded wire mesh shall consist of 4 x 4 - W4.0 x W4.0, Grade 185. Bearing plates shall be Grade 60 steel plates with dimensions of 8 x 8 x ½ inches. Steel hex nuts shall be M-291 Grade B.

2.4 Centralizers shall consist of materials that are not detrimental to the nail steel, and exclusive of wood.

2.5 Nail grout shall have a minimum 3-day compressive strength of 1,500 psi and a minimum 28-day compressive strength of 3,000 psi.

2.6 Shotcrete facing shall have a minimum 3-day compressive strength of 2,000 psi, and a minimum 28-day compressive strength of 4,000 psi.

2.7 The wall drain system shall consist of 12-inch wide MiraDrain with a minimum flow capacity of 150 gpm.

2.8 The footing drain system shall consist of Schedule 40, 4-inch I.D., HDPE perforated pipe.

2.9 Filter fabric shall consist of AASHTO M288 Class 2.

3. Excavation and Subgrade Preparation

3.1 The excavation cuts shall not exceed the vertical nail spacing plus the required minimum lap for reinforcing steel, or the short term stand up time of the soil, whichever is less.

3.2 Excavation cuts and shotcrete application shall be completed within 24 hours of delay time, unless approved by the Engineer.

3.3 Subsequent excavation cuts shall not be made until installation of the soil nails has been completed and the shotcrete has reached the minimum 3-day compressive strength.

4. Construction

4.1 Any construction equipment, materials, and stockpiles will be kept at least 10 feet away, or the distance of the wall height (whichever is greater) from the top of the excavation slope.

4.2 Soil nails shall be installed in minimum 5-inch diameter drill holes with centralizers, and at the inclinations, spacings, and lengths as indicated in Sheet W-22 through W-25.

4.3 Nail grout shall be placed from the bottom to the top of the drill hole opening using a tremie method.

4.4 Verification testing shall be performed on two sacrificial nails per wall and 5% of production nails shall be proof tested in accordance with the procedures in the Project Documents.

4.5 Strip drains shall be installed in front of and behind the permanent shotcrete at 5 feet on centers, running vertically from the top of the wall to the finish grades at the toe. Splices in the strip drains shall be constructed to not impede the flow of water with a minimum 12 inches of overlap. The geotextile side of the strip drains shall be placed against the ground surface. The strip drains shall connect to the underdrain system located in front of the shotcrete. The strip drains shall be constructed as indicated on Sheet W-32.

4.6 The underdrain pipe shall be placed at a minimum 2 percent slope. The footing drain pipe shall be surrounded by 3/4 inch clean crushed rock or recycled concrete, wrapped in filter fabric with a minimum fabric overlap of 1 foot.

4.7 Heel drains from the wire facing MSE wall shall penetrate the shotcrete as indicated on Sheet W-32 and at the locations as shown in the Project Plans. Blockouts in the shotcrete shall be provided for heel drain collector pipe penetration and collector pipes shall be routed down the face of the shotcrete to the underdrain.

4.8 Welded wire mesh shall be placed with 2 inch clearance from soils and weather. Reinforcing bars shall be placed with a minimum space of 1 inch from welded wire mesh.

4.9 Splicing of any reinforcing steel shall have a minimum lap length of 22.5 inches.

4.10 Shotcrete shall be undisturbed gun finish with a minimum thickness of 8 inches, excluding the thickness of the strip drains. Shotcrete shall be placed so as to completely fill the void at the top of drill holes.

4.11 Bearing plates shall be placed on the shotcrete so as to be uniformly seated. Bearing plates, beveled washers, and nuts shall be installed prior to the shotcrete initial set and nuts shall be hand-wrenched tight. If uniform contact for the bearing plate cannot be provided, the bearing plate shall be set in a bed of grout, and nuts shall be hand-wrenched tight after a 24 hour shotcrete set period. Bearing plates shall not be placed more than 10 degrees from parallel to the wall face.

4.12 In the event that soil nail is in conflict with existing underground features, soil nail shall be modified with approval by the Design Engineer.

4.13 No changes to the soil nail wall design, including but not limited to, length, type, or elevation shall be made without approval from the Design Engineer.

5. Drainage

5.1 The wall system and the surrounding areas shall be kept dry at all times during and after the construction.

5.2 In no case shall runoff be allowed to enter the wall construction areas or water be ponded around the wall.

5.3 Excavation slopes shall also be protected against erosion to reduce the potential for sloughing, and slope failure.

6. Quality Assurance

6.1 The Engineer shall provide quality assurance and testing during construction.

6.2 The Engineer shall specify the type and minimum frequency of material testing prior to the beginning of wall construction.

7. Design Criteria

7.1 Design parameters used for retaining wall design are as follows:

Material Type	Friction Angle (degrees)	Cohesion (psf)	Unit Weight (pcf)	Bond Strength (psi)
On-Site Soil	32.0	0	127.0	10

7.2 Internal Stability

Criteria (Static)	Min. Factor of Safety
Pullout (FSp)	2.0
Tensile Failure (FSt)	1.8

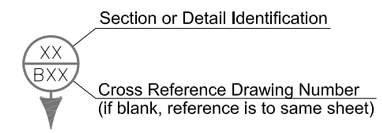

7.3 External Stability

Criteria	Min. Factor of Safety
Global (FSg)	1.5
Sliding (FSsl)	1.5
Bearing (FSh)	3.0

7.4 Facing Stability

Criteria	Min. Factor of Safety
Flexure (FSff)	1.5
Punching (FSfp)	1.5

8. Abbreviations

ABC	Aggregate base course	NL	Nail Lenth
BG	Finish grade at bottom of wall	NTS	Not to scale
BNW	Bottom of nail wall	OC	On centers
DH	Design height	SN	Soil nail
DIA	Diameter	STD	Standard
HMA	Hot mixed asphalt	TG	Finish grade at top of wall
MAX	Maximum	TNW	Top of nail wall
MIN	Minimum	TYP	Typical

811 Know what's below. Call before you dig.

RFC02 JUNE, 2015 (REVIEW)

Print Date: 05/04/2015	Sheet Revisions			Colorado Department of Transportation	As Constructed
File Name: 15-3500CWNOTES	Date:	Comments	Init.	4670 N. Holly Denver, CO 80216 Phone: FAX: 303-398-6781	No Revisions:
Horiz. Scale: As Noted Vert. Scale: As Noted				Region 1 DK	Revised:
GROUND ENGINEERING / TSIOUVARAS SIMMONS HOLDERNESS CONSULTING ENGINEERS					Void:

I-70 OVER HAVANA STREET DESIGN-BUILD				Project No./Code
SOIL NAIL GENERAL NOTES				FBR 0704-230
Designer: H.H.Chiang	Structure Numbers	WALL-E-17-EK		19339
Detailer: C.Henderson		WALL-E-17-EL		
Sheet Subset: Wall	Subset Sheets: W-20 of 32			Sheet Number 118

Summary of Quantities - Soil Nail Wall

Item No.	Description	Unit	Wall C WALL-E-17-EK	Wall D WALL-E-17-EL
504-06100	Ground Nailed Wall	SF	2,322	1,255
504	Soil Nails	Each	132	88
504	Nail Length	LF	4,092	2,640

RFC02 JUNE, 2015 (REVIEW)

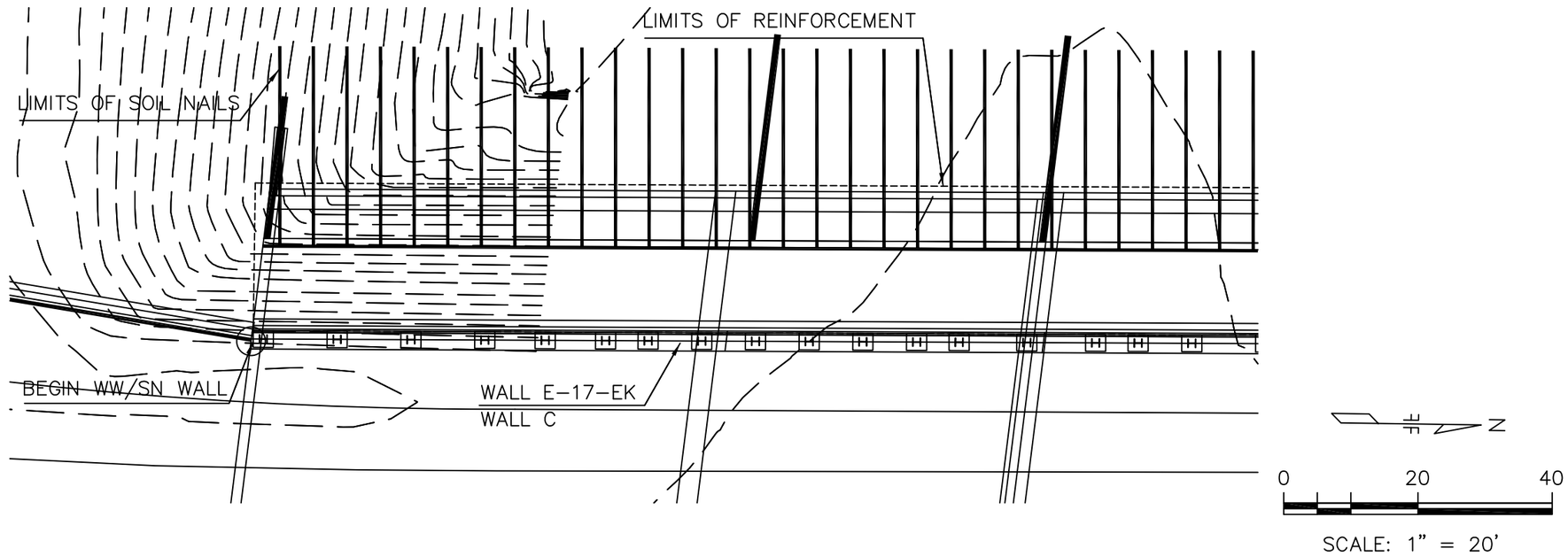

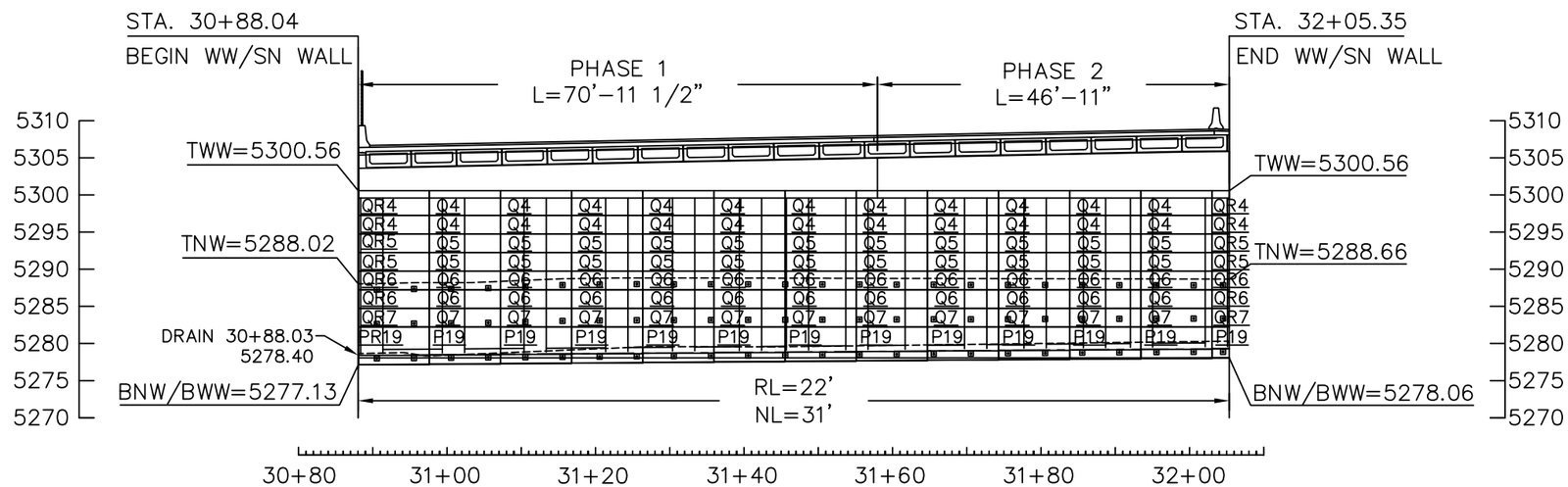

WALL C – PH. 1 & 2 (E-17-EK)
STA. 30+88.04 TO 32+05.35

RFC02 JUNE, 2015 (REVIEW)

Print Date: 05/04/2015	Sheet Revisions	Colorado Department of Transportation	As Constructed	I-70 OVER HAVANA STREET DESIGN-BUILD	Project No./Code
File Name: 15-3500CWP&P	Date: / Comments / Init.	4670 N. Holly Denver, CO 80216 Phone: FAX: 303-398-6781	No Revisions:	WALL C PH. 1 & 2 PLAN AND PROFILE	FBR 0704-230
Horiz. Scale: As Noted Vert. Scale: As Noted		Region 1 DK	Revised:	Designer: H.H.Chiang / Structure Numbers: WALL-E-17-EK	19339
GROUND ENGINEERING / TSIOUVARAS SIMMONS HOLDERNESS CONSULTING ENGINEERS			Void:	Detailer: C.Henderson / Sheet Subset: Wall / Subset Sheets: W-22 of 32	Sheet Number 120

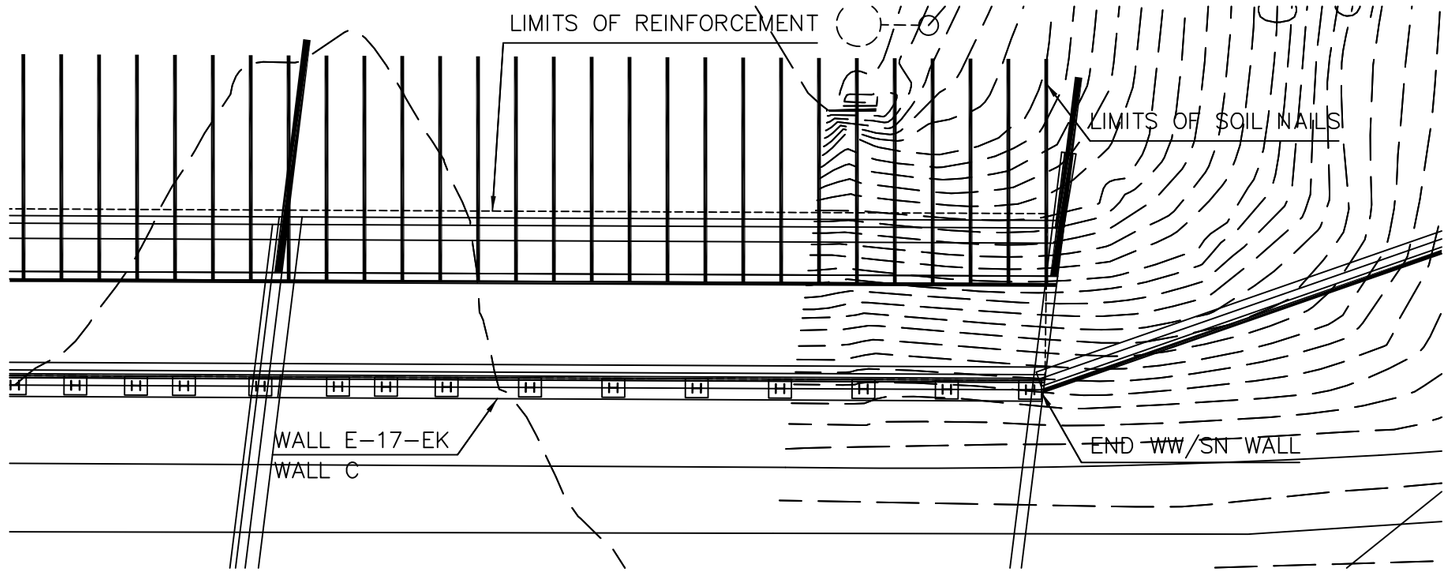

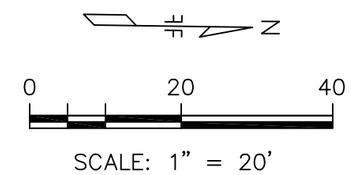

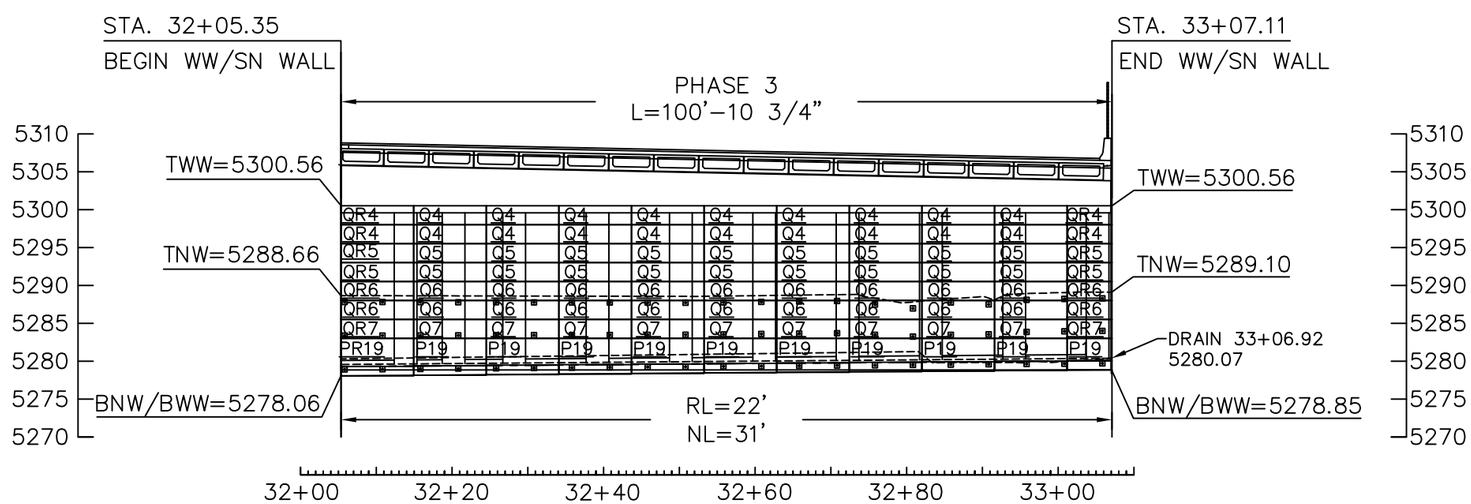

WALL C – PH. 3 (E-17-EK)
STA. 32+05.35 TO 33+07.11

RFC02 JUNE, 2015 (REVIEW)

Print Date: 05/04/2015	Sheet Revisions	Colorado Department of Transportation	As Constructed	I-70 OVER HAVANA STREET DESIGN-BUILD	Project No./Code
File Name: 15-3500CWP&P	Date: / Comments / Init.	4670 N. Holly Denver, CO 80216 Phone: FAX: 303-398-6781	No Revisions:	WALL C PH. 3 PLAN AND PROFILE	FBR 0704-230
Horiz. Scale: As Noted Vert. Scale: As Noted		Region 1 DK	Revised:	Designer: H.H.Chiang / Structure Numbers: WALL-E-17-EK	19339
GROUND ENGINEERING / TSIOUVARAS SIMMONS HOLDERNESS CONSULTING ENGINEERS			Void:	Detailer: C.Henderson / Sheet Subset: Wall / Subset Sheets: W-23 of 32	Sheet Number 121

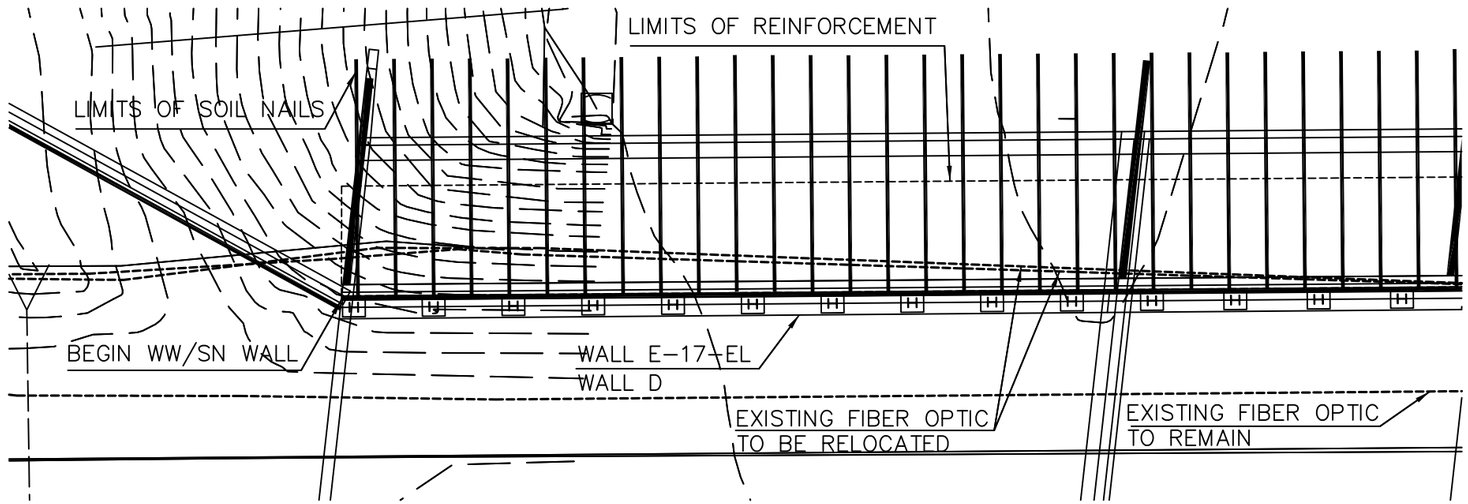

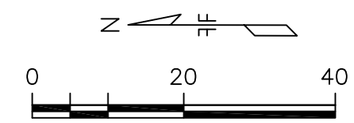

SCALE: 1" = 20'

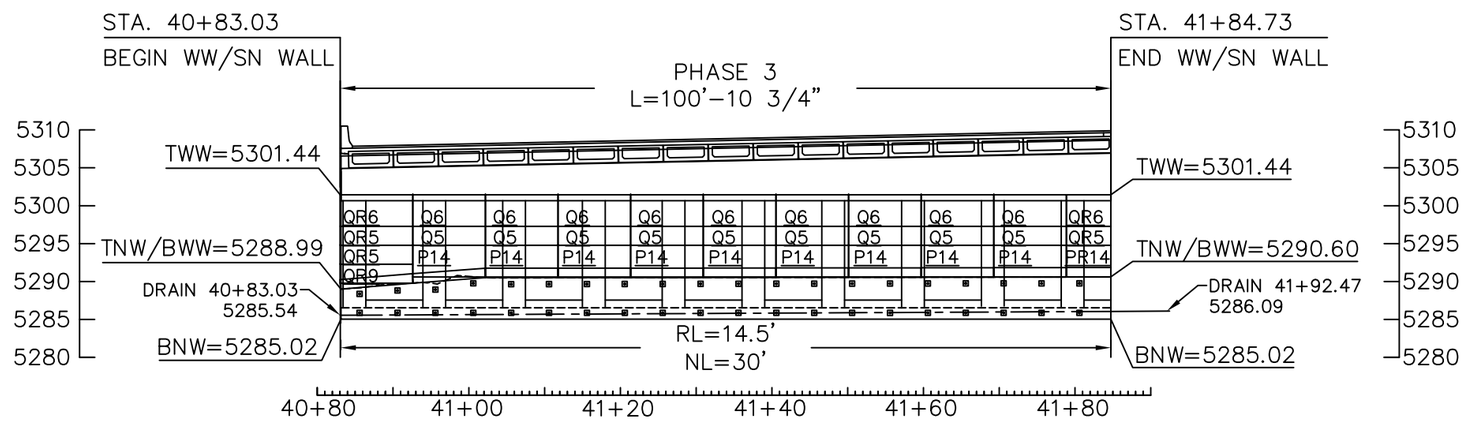

WALL D – PH. 3 (E-17-EL)
STA. 40+83.03 TO 41+84.73

RFC02 JUNE, 2015 (REVIEW)

Print Date: 05/04/2015	Sheet Revisions			Colorado Department of Transportation	As Constructed	I-70 OVER HAVANA STREET DESIGN-BUILD	Project No./Code
File Name: 15-3500CWP&P	Date:	Comments	Init.	4670 N. Holly Denver, CO 80216 Phone: FAX: 303-398-6781	No Revisions:	WALL D PH. 3 PLAN AND PROFILE	FBR 0704-230
Horiz. Scale: As Noted Vert. Scale: As Noted				Region 1 DK	Revised:	Designer: H.H.Chiang / Structure Numbers: WALL-E-17-EL	19339
GROUND ENGINEERING / TSIOUVARAS SIMMONS HOLDERNESS CONSULTING ENGINEERS					Void:	Detailer: C.Henderson / Sheet Subset: Wall / Subset Sheets: W-24 of 32	Sheet Number 122

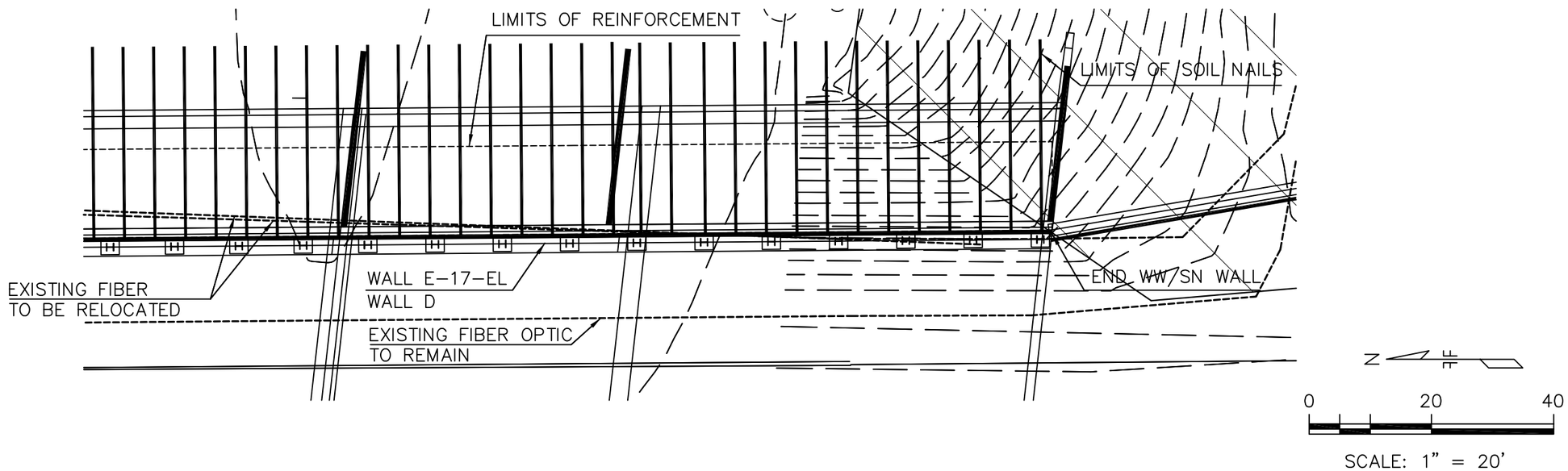

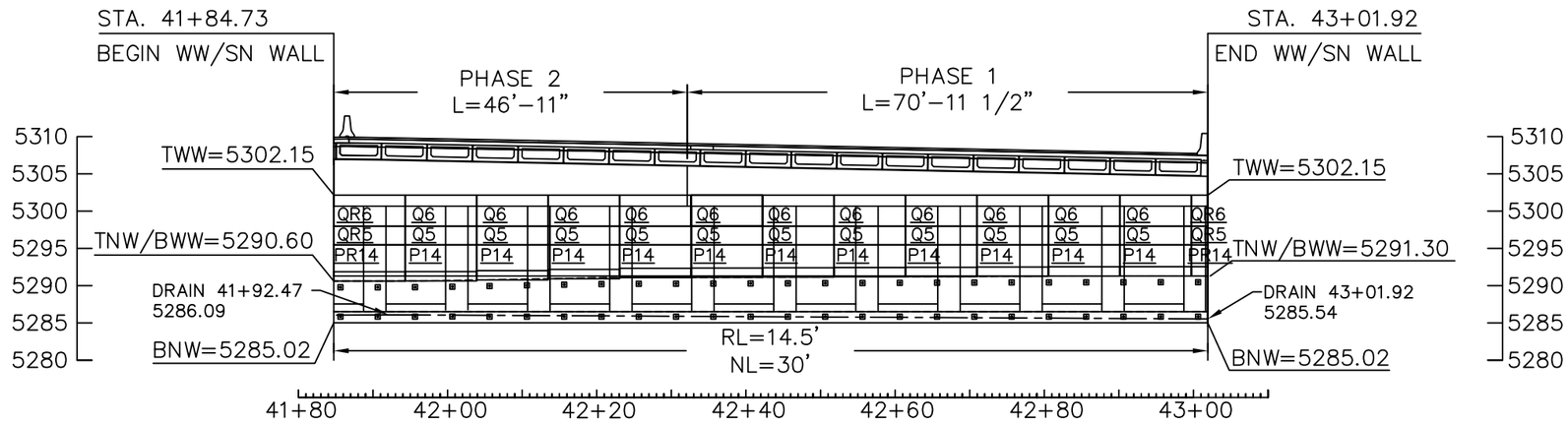

WALL D – PH. 1 & 2 (E-17-EL)
STA. 41+84.73 TO 43+01.92

RFC02 JUNE, 2015 (REVIEW)

Print Date: 05/04/2015	Sheet Revisions	Colorado Department of Transportation	As Constructed	I-70 OVER HAVANA STREET DESIGN-BUILD	Project No./Code
File Name: 15-3500CWP&P	Date: / Comments / Init.	4670 N. Holly Denver, CO 80216 Phone: FAX: 303-398-6781	No Revisions:	WALL D PH. 1 & 2 PLAN AND PROFILE	FBR 0704-230
Horiz. Scale: As Noted Vert. Scale: As Noted		Region 1 DK	Revised:	Designer: H.H.Chiang / Structure Numbers: WALL-E-17-EL	19339
GROUND ENGINEERING / TSIOUVARAS SIMMONS HOLDERNESS CONSULTING ENGINEERS			Void:	Detailer: C.Henderson / Sheet Subset: Wall / Subset Sheets: W-25 of 32	Sheet Number 123

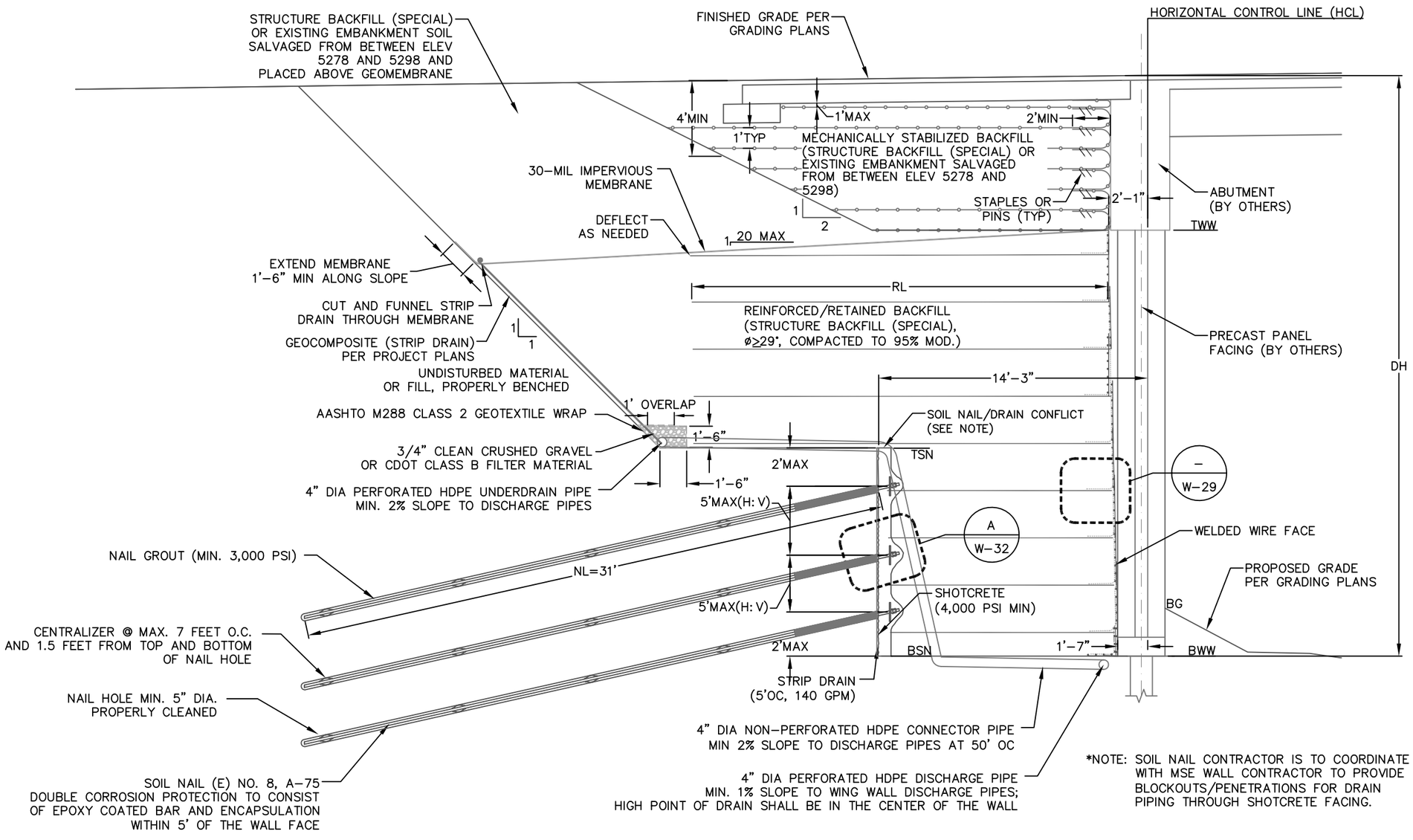

W-26 / A — TYPICAL WALL C SECTION

NTS

RFC02 JUNE, 2015 (REVIEW)

Print Date: 05/04/2015	Sheet Revisions	Colorado Department of Transportation	As Constructed	I-70 OVER HAVANA STREET DESIGN-BUILD	Project No./Code
File Name: 15-3500CBWDTLS	Date: / Comments / Init.	4670 N. Holly, Denver, CO 80216	No Revisions:	TYPICAL WWF MSE & SN WALL C SECTION	FBR 0704-230
Horiz. Scale: As Noted / Vert. Scale: As Noted		Phone: / FAX: 303-398-6781	Revised:	Designer: H.H.Chiang / Structure Numbers: WALL-E-17-EK	19339
GROUND ENGINEERING / TSIOUVARAS SIMMONS HOLDERNESS CONSULTING ENGINEERS		Region 1 / DK	Void:	Detailer: C.Henderson / Sheet Subset: Wall / Subset Sheets: W-26 of 32	Sheet Number 124

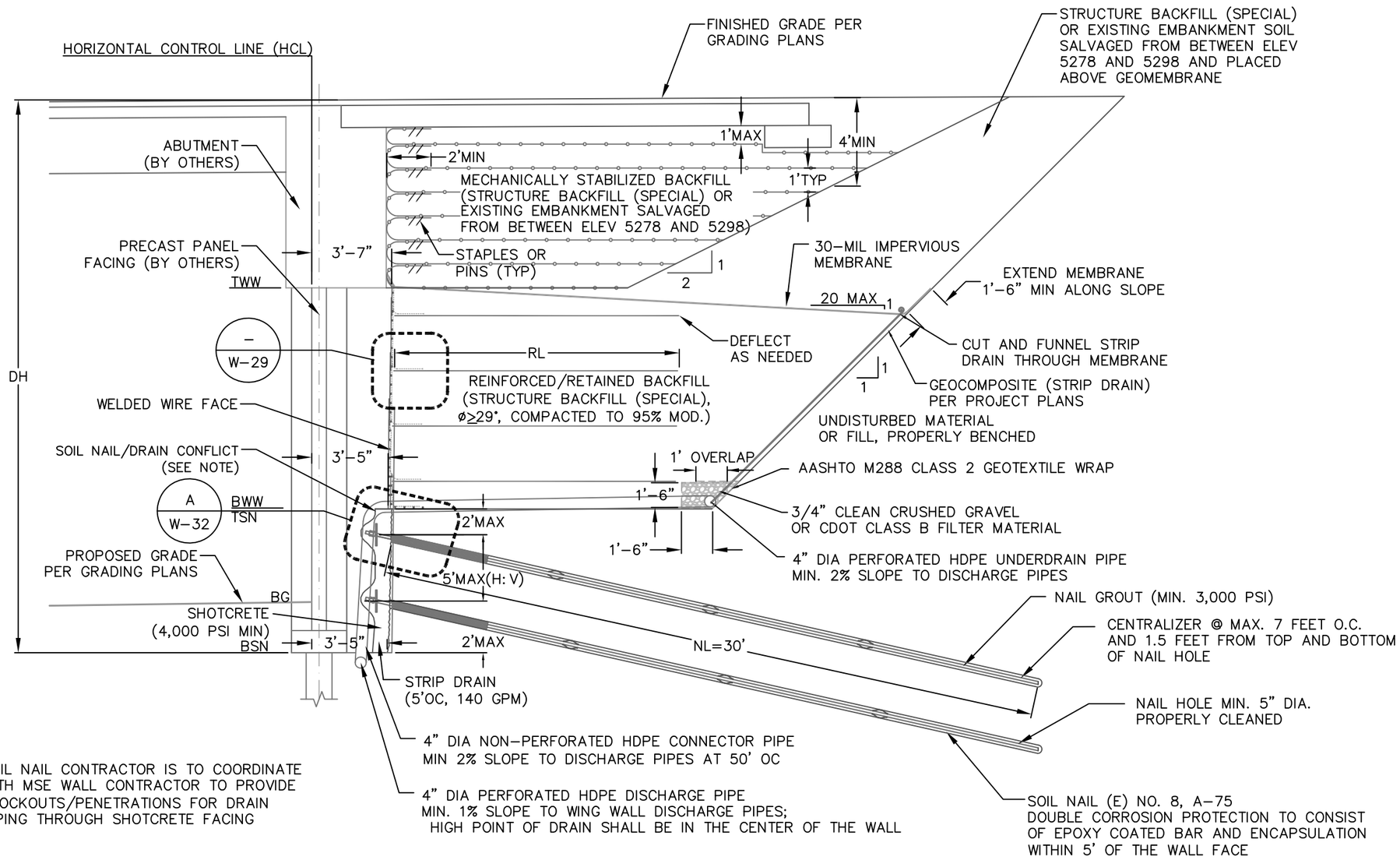

NOTE: SOIL NAIL CONTRACTOR IS TO COORDINATE WITH MSE WALL CONTRACTOR TO PROVIDE BLOCKOUTS/PENETRATIONS FOR DRAIN PIPING THROUGH SHOTCRETE FACING

W-27 / A — TYPICAL WALL D SECTION

NTS

RFC02 JUNE, 2015 (REVIEW)

Print Date: 05/04/2015	Sheet Revisions	Colorado Department of Transportation	As Constructed	I-70 OVER HAVANA STREET DESIGN-BUILD	Project No./Code
File Name: 15-3500CBWDTLS	Date: / Comments / Init.	4670 N. Holly, Denver, CO 80216	No Revisions:	TYPICAL WWF MSE & SN WALL D SECTION	FBR 0704-230
Horiz. Scale: As Noted / Vert. Scale: As Noted		Phone: FAX: 303-398-6781	Revised:	Designer: H.H.Chiang / Structure Numbers: WALL-E-17-EL	19339
GROUND ENGINEERING / TSIOUVARAS SIMMONS HOLDERNESS CONSULTING ENGINEERS		Region 1 DK	Void:	Detailer: C.Henderson / Sheet Subset: Wall / Subset Sheets: W-27 of 32	Sheet Number 125

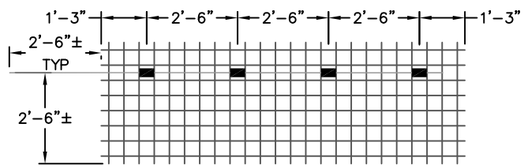

Q4

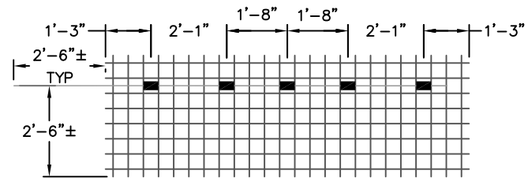

Q5

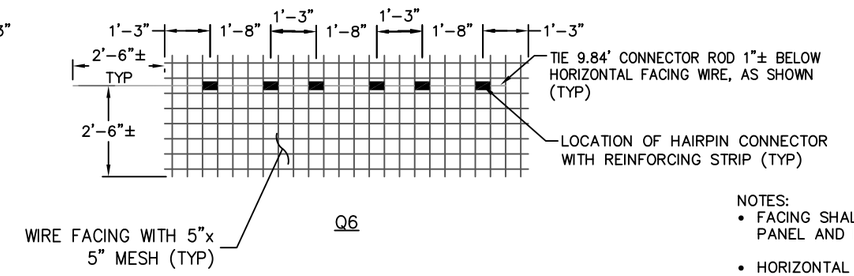

Q6

NOTES:

- FACING SHALL BE SUPPLIED AS FULL SIZE PANEL AND FIELD CUT FOR EXACTING FIT.
- HORIZONTAL DIMENSION FOR HAIRPIN LOCATION MAY SHIFT WITHIN A 5" GRID.

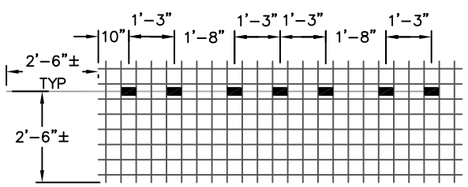

Q7

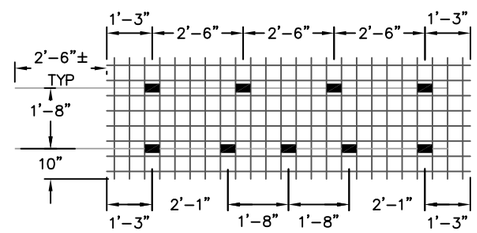

Q9

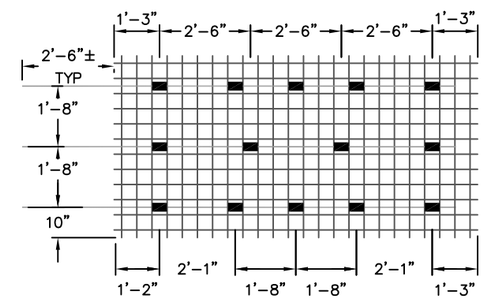

P14

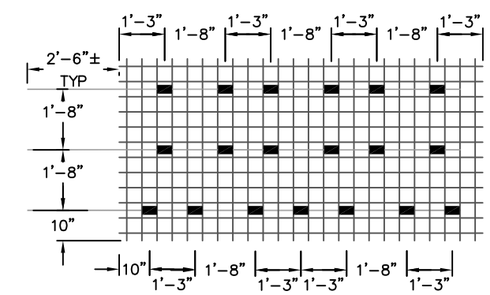

P19

TYPICAL PLACEMENT DIAGRAMS OF CONNECTOR RODS AND REINFORCING STRIPS

NTS

RFC02 JUNE, 2015 (REVIEW)

Print Date: 05/04/2015	Sheet Revisions	Colorado Department of Transportation	As Constructed	I-70 OVER HAVANA STREET DESIGN-BUILD
File Name: 15-3500CBWDTLS	Date: / Comments / Init.	4670 N. Holly Denver, CO 80216 Phone: FAX: 303-398-6781	No Revisions:	WIRE FACE MSE PANEL DETAILS
Horiz. Scale: As Noted Vert. Scale: As Noted		Region 1 DK	Revised:	Designer: H.H.Chiang / Structure Numbers: WALL-E-17-EK
GROUND ENGINEERING / TSIOUVARAS SIMMONS HOLDERNESS CONSULTING ENGINEERS			Void:	Detailer: C.Henderson / WALL-E-17-EL
				Sheet Subset: Wall / Subset Sheets: W-28 of 32

Project No./Code
FBR 0704-230
19339
Sheet Number 126

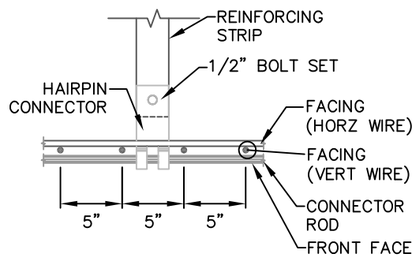

TYPICAL "A" DETAILS

NTS STRIP CONNECTION

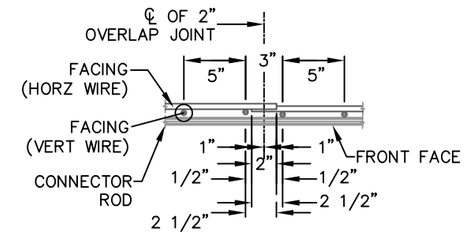

TYPICAL "B" DETAILS

NTS WIRE FACING OVERLAP JOINT

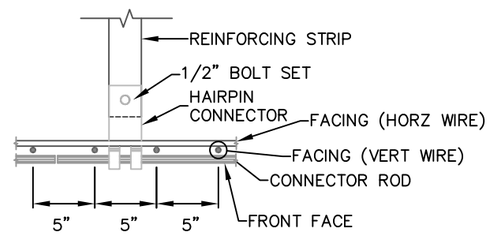

TYPICAL "C" DETAILS

NTS CONNECTOR ROD BUTT JOINT

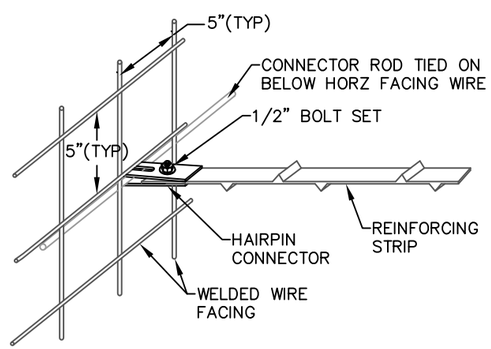

TYPICAL CONNECTION OF STRIP TO WIRE FACING DETAILS

NTS

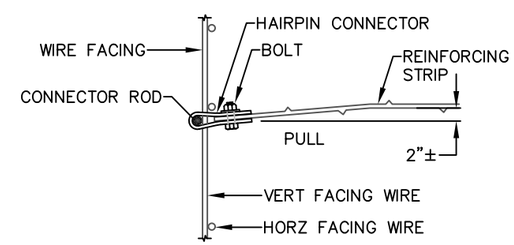

TYPICAL SECTION AT STRIP CONNECTION DETAILS

NTS

RFC02 JUNE, 2015 (REVIEW)

Print Date: 05/04/2015	Sheet Revisions	Colorado Department of Transportation	As Constructed	I-70 OVER HAVANA STREET DESIGN-BUILD	Project No./Code
File Name: 15-3500CBWDTLS	Date: / Comments / Init.	4670 N. Holly Denver, CO 80216 Phone: FAX: 303-398-6781	No Revisions:	WIRE FACE MSE INSTALLATION DETAILS	FBR 0704-230
Horiz. Scale: As Noted Vert. Scale: As Noted		Region 1 DK	Revised:	Designer: H.H.Chiang / Structure Numbers: WALL-E-17-EK	19339
GROUND ENGINEERING / TSIOUVARAS SIMMONS HOLDERNESS CONSULTING ENGINEERS			Void:	Detailer: C.Henderson / WALL-E-17-EL	
				Sheet Subset: Wall / Subset Sheets: W-29 of 32	Sheet Number 127

NOTES FOR WIRE FACINGS AND BASE:

1. WIRE FACINGS AND BASE SHALL BE SHOP FABRICATED OF COLD DRAWN STEEL WIRE CONFORMING TO THE MINIMUM REQUIREMENTS OF ASTM A–82 (AASHTO M 32), WELDED INTO THE FINISHED CONFIGURATION IN ACCORDANCE WITH ASTM A–185 (AASHTO M55), AND GALVANIZED PER ASTM A–123 (AASHTO M 111).
2. DIMENSIONAL TOLERANCE = ±1/4".
3. DESIGN LENGTH = 9'–10" (FACINGS & BASE OVERLAPPED 2").
4. DESIGN HEIGHT AS SHOWN (FACINGS OVERLAPPED 10")

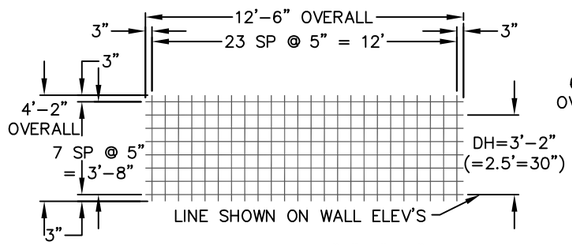

ELEVATION – TYPE "Q" 5"x 5" WIRE MESH FACING

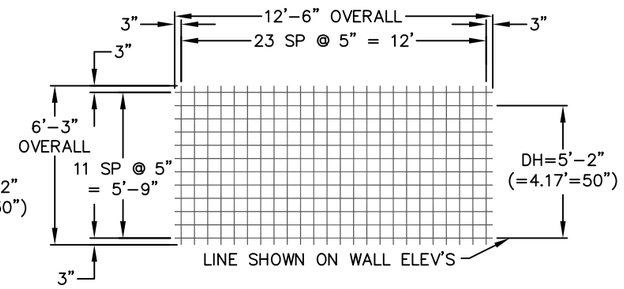

ELEVATION – TYPE "P" 5"x 5" WIRE MESH FACING

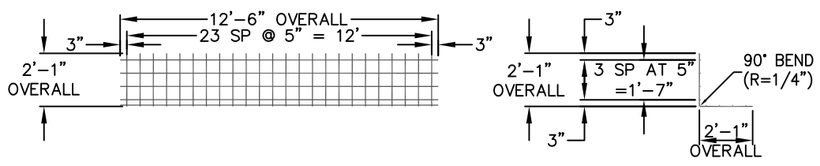

ELEVATION & SECTION – TYPE "L" 5"x 5" WIRE MESH BASE

TYPICAL WIRE MESH FACING DETAILS

NTS

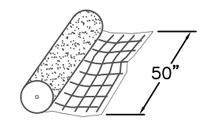

GEOTEXTILE RETENTION FABRIC
CARTHAGE MILLS 15% WOVEN
GEOTEXTILE OR EQUAL

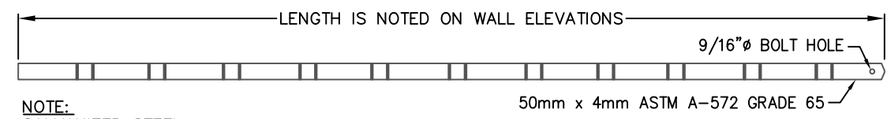

NOTE:
GALVANIZED STEEL

REINFORCING STRIP – 50mm x 4mm

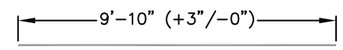

ASTM A615 GRADE 60 (GALVANIZED)
NOMINAL 1/2"ø ROD (SMOOTH OR DEFORMED)

CONNECTOR ROD
(TO BE TIED ON TO WIRE FACINGS IN FIELD)

1/2"ø ASTM A449 BOLT WITH NUT & WASHER (GALVANIZED)

BOLT SET

ASTM A1011 SS GRADE 50 (FORMERLY ASTM A–570) (GALVANIZED STEEL)

HAIRPIN CONNECTOR

COMPONENTS FOR CONNECTING REINFORCING STRIPS TO WIRE FACINGS

NTS

RFC02 JUNE, 2015 (REVIEW)

Print Date: 05/04/2015	Sheet Revisions				
File Name: 15–3500CBWDTLS	Date:	Comments	Init.		
Horiz. Scale: As Noted Vert. Scale: As Noted					
GROUND ENGINEERING / TSIOUVARAS SIMMONS HOLDERNESS CONSULTING ENGINEERS					

Colorado Department of Transportation
4670 N. Holly
Denver, CO 80216
Phone: FAX: 303–398–6781
Region 1 DK

As Constructed
No Revisions:
Revised:
Void:

I–70 OVER HAVANA STREET DESIGN–BUILD
WIRE FACE MSE COMPONENT DETAILS

Designer:	H.H.Chiang	Structure Numbers	WALL–E–17–EK
Detailer:	C.Henderson		WALL–E–17–EL
Sheet Subset:	Wall	Subset Sheets: W–30 of 32	

Project No./Code
FBR 0704–230
19339
Sheet Number 128

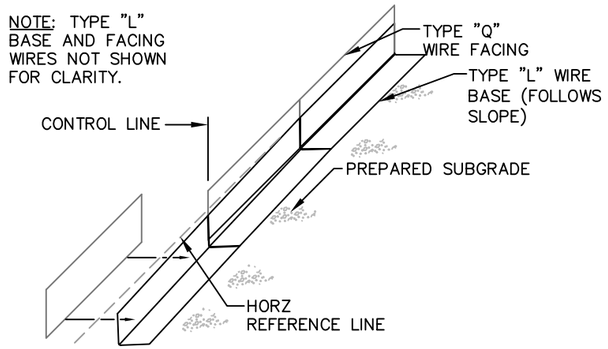

STEP 1: INSTALLATION OF BASES & 1st. FACINGS

- SET TYPE "L" BASES DIRECTLY ON SUBGRADE (FOLLOW SLOPE OR BOTTOM OF WALL ELEVATION SHOWN ON WALL ELEV. SHEETS). OVERLAP EACH BASE 2" HORIZONTAL, (OR ALONG SLOPE) AS SHOWN ON THE "EXAMPLE WALL" SHEET OF THESE PLANS.
- NOTE FACING DESIGNATION (Q4 FOR EXAMPLE) ON WALL ELEVATION AND THEN REFER TO FACING DIAGRAMS ON SHEET 3 TO FIND ARRANGEMENT OF THE HAIRPIN CONNECTORS FOR THE REINFORCING STRIPS.
- PLACE THE NUMBER OF REQUIRED HAIRPIN CONNECTORS (AS INDICATED ON IN FACING DIAGRAM) ON TO CONNECTOR ROD, AND TIE-WIRE THE ROD TO THE FACING WHERE SHOWN IN FACING DIAGRAM.
- TIE-WIRE BOTTOM FACINGS SECURELY TO TYPE "L" BASES, OVERLAPPING EACH FACING 2" HORIZONTALLY, SETTING THEM HORIZONTALLY TO THE PROPER DESIGN ELEVATION PER THE WALL ELEVATION SHEETS (EXCEPT WHEN NOTE ON ELEVATION SHEETS REQURE FACINGS TO FOLLOW SLOPE), AND MAKING SURE HORIZONTAL WIRES OF FACINGS ARE LOCATED ON THE FILL SIDE OF THE WALL.

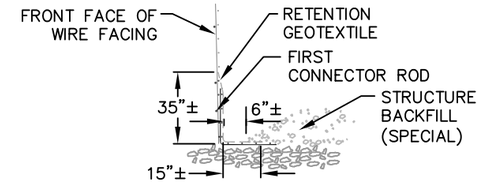

- PLACE 50"-WIDE RETENTION GEOTEXTILE AS SHOWN. PLACE AND COMPACT FIRST STRUCTURE BACKFILL (SPECIAL)
- LIFT TO LEVEL OF FIRST CONNECTOR ROD LOCATION.

CAUTION ► FILL MUST BE SLOPED DOWN AS SHOWN TO PREVENT HORIZONTAL DISPLACEMENT OF FACING PRIOR TO CONNECTION OF LADDERS OR STRIPS.

STEP 2: 1st. BACKFILL LIFT

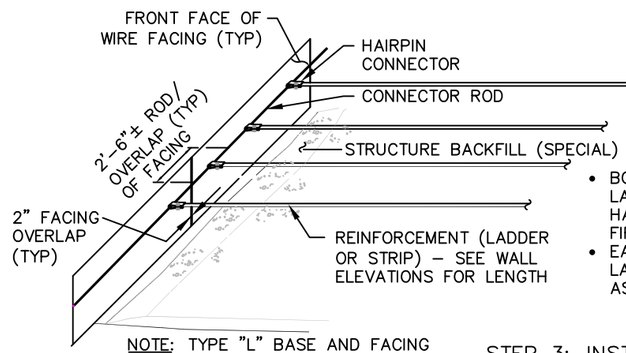

NOTE: TYPE "L" BASE AND FACING WIRES NOT SHOWN FOR CLARITY.

- BOLT REINFORCING LADDERS OR STRIPS TO HAIRPIN CONNECTORS. FIRMLY PULL ON
- EACH REINFORCING LADDER OR STRIP UNTIL ASSEMBLY IS TIGHT.

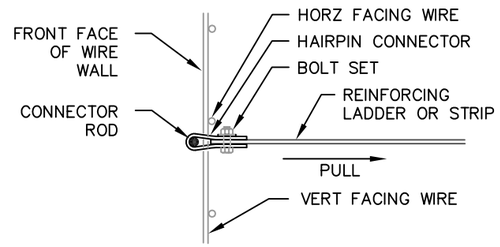

SECTION DETAIL

STEP 3: INSTALLATION OF 1st. REINFORCING LADDERS OR STRIPS

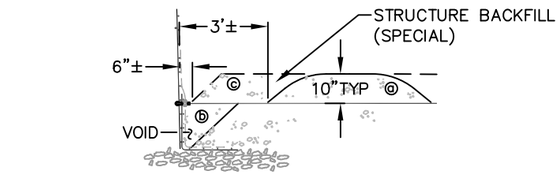

a. PLACE ENOUGH BACKFILL OVER REINFORCING LADDERS OR STRIPS TO SECURE POSITION AS SHOWN. THEN FILL VOID UNDER LADDERS OR STRIPS NEAR FACING.
b. THEN PLACE AND COMPACT SECOND GRANULAR BACKFILL LIFT
c. TO (10" MAX) LEVEL OF NEXT CONNECTOR ROD LOCATION.

CAUTION ► FILL MUST BE SLOPED DOWN AS SHOWN TO PREVENT HORIZONTAL DISPLACEMENT OF FACING PRIOR TO CONNECTION OF LADDERS OR STRIPS.

STEP 4: 2nd. BACKFILL LIFT

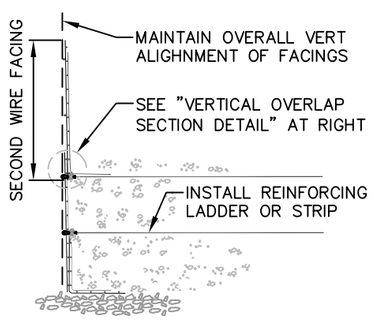

SECTION

NOTES

- POSITION SECOND FACING DIRECTLY BEHIND AND OVERLAP LOWER FACING AS SHOWN IN DETAIL (RIGHT). TIE-WIRE THE LOWER PORTION OF SECOND FACING TO ADJACENT FACINGS
- PLACE STRIPS AS PER "STEP 3."
- BACKFILL AS PER "STEP 4a AND 4b."
- PLACE 50"-WIDE RETENTION GEOTEXTILE AS SHOWN IN "STEP 2."
- BACKFILL AS PER "STEP 4c."

NOTE: GEOTEXTILE SHALL BE APPROX. 35" VERTICAL, ALLOWING 5"± OVERLAP ON ADJACENT LAYERS. WHEN WALL ELEVATIONS CALL FOR 15"-30" SPACING BETWEEN LADDERS OR STRIPS, GEOTEXTILE MUST BE SLIT FOR PENETRATION OF MID-LEVEL STRIPS.

STEP 5: INSTALLATION OF 2nd. FACING UNITS

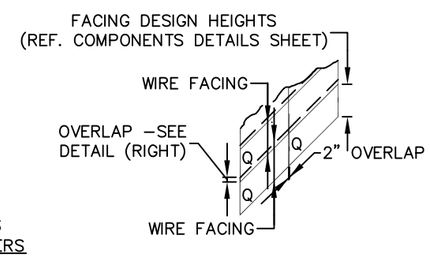

FACING OVERLAP DETAIL

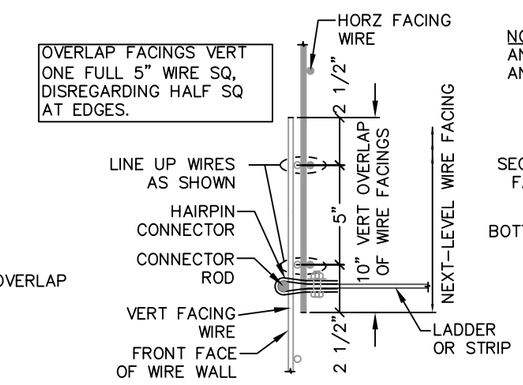

VERTICAL OVERLAP SECTION-DETAIL

NOTE: SEE "TYPICAL WALL SECTION" IN THESE PLANS AND IN CONTRACT PLANS FOR TREATMENT AT TOP AND BOTTOM OF WALL.

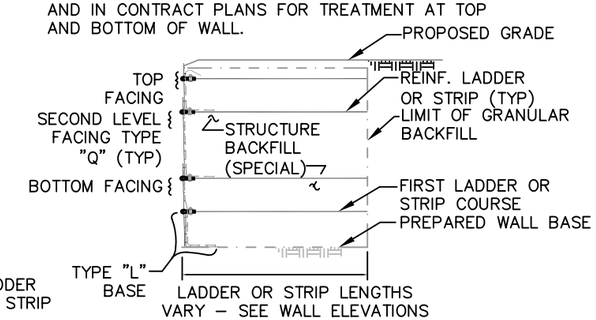

- REPEAT "STEP 5" UNTIL WALL IS TOPPED OUT AS SHOWN ABOVE.

COMPLETED TERRATREL WALL SECTION

RFC02 JUNE, 2015 (REVIEW)

Print Date: 05/04/2015	Sheet Revisions	Colorado Department of Transportation	As Constructed	I-70 OVER HAVANA STREET DESIGN-BUILD		Project No./Code
File Name: 15-3500CBWDTLS	Date: / Comments / Init.	4670 N. Holly, Denver, CO 80216, Phone: FAX: 303-398-6781	No Revisions:	WIRE FACE MSE CONSTRUCTION PROCEDURE		FBR 0704-230
Horiz. Scale: As Noted / Vert. Scale: As Noted		Region 1 DK	Revised:	Designer: H.H.Chiang / Structure Numbers: WALL-E-17-EK		19339
GROUND ENGINEERING / TSIOUVARAS SIMMONS HOLDERNESS CONSULTING ENGINEERS			Void:	Detailer: C.Henderson / WALL-E-17-EL		Sheet Number 129
				Sheet Subset: Wall	Subset Sheets: W-31 of 32	

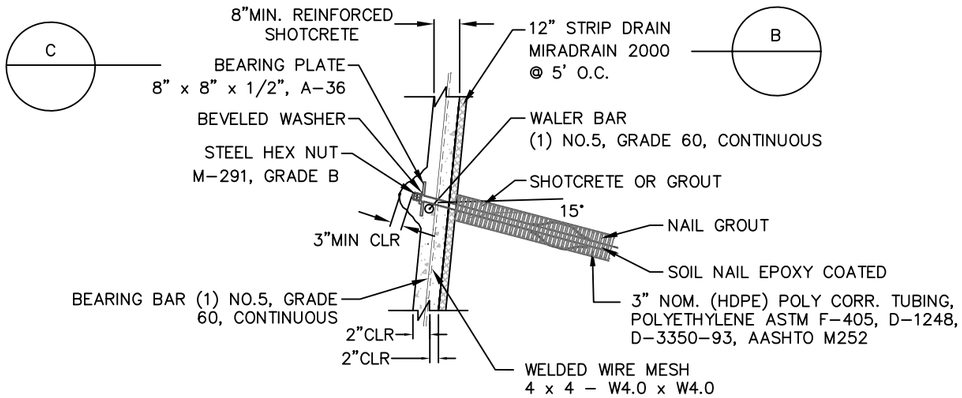

A
W-26/27

TYPICAL NAIL HEAD DETAILS

NTS

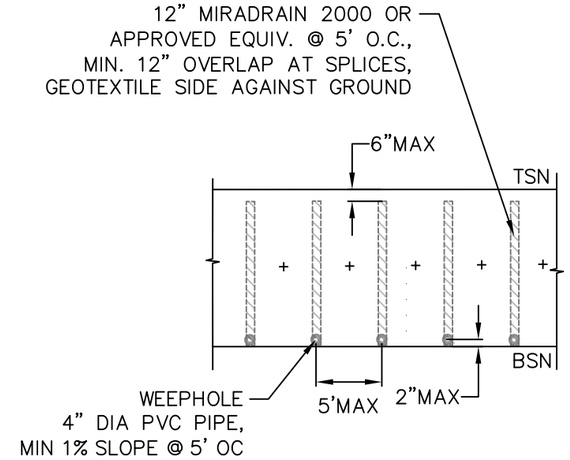

B
W-32

TYPICAL DRAIN STRIP DETAILS

NTS

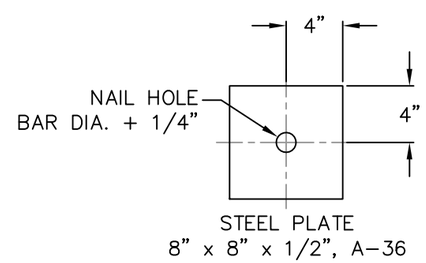

C
W-32

TYPICAL BEARING PLATE DETAILS

NTS

RFC02 JUNE, 2015 (REVIEW)

Print Date: 05/04/2015	Sheet Revisions	Colorado Department of Transportation	As Constructed	I-70 OVER HAVANA STREET DESIGN-BUILD	Project No./Code
File Name: 15-3500CBWDTLS	Date: / Comments / Init.	4670 N. Holly Denver, CO 80216 Phone: FAX: 303-398-6781	No Revisions:	TYPICAL SOIL NAIL DETAILS	FBR 0704-230
Horiz. Scale: As Noted Vert. Scale: As Noted		Region 1 DK	Revised:	Designer: H.H.Chiang / Structure Numbers: WALL-E-17-EK	19339
GROUND ENGINEERING / TSIOUVARAS SIMMONS HOLDERNESS CONSULTING ENGINEERS			Void:	Detailer: C.Henderson / WALL-E-17-EL	Sheet Number 130
				Sheet Subset: Wall / Subset Sheets: W-32 of 32	

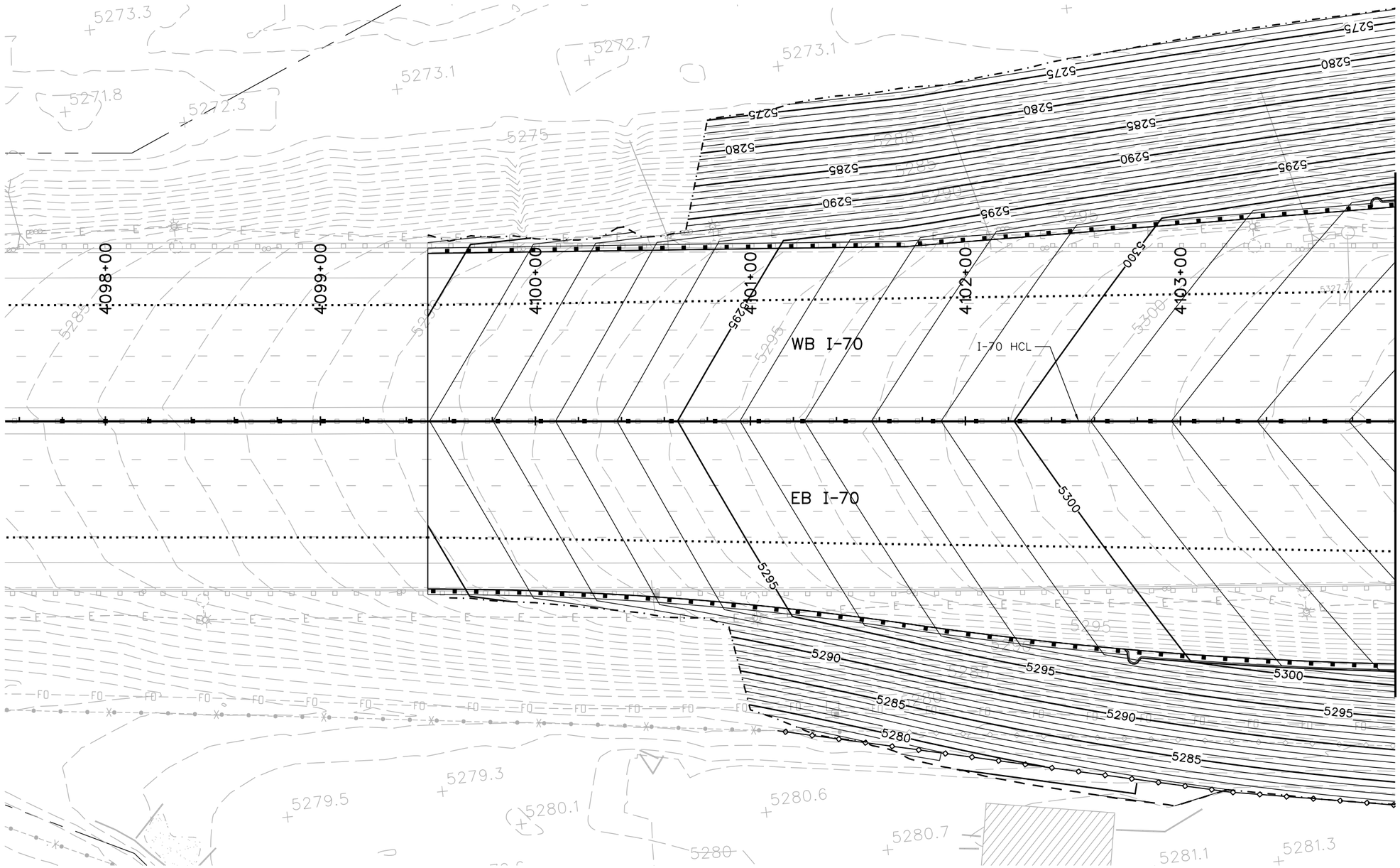

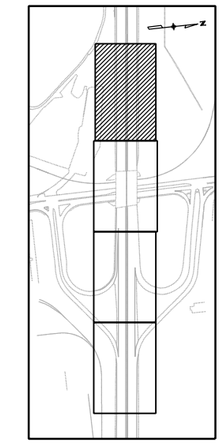

Know what's below. Call before you dig.

RFC02 JUNE, 2015 (REVIEW)

bob.harr 12:00:11 PM P:\13033540B - I-70 over Havana DB\19339\Design\Drawings\19339_Grading.dgn

Print Date: 6/17/2015	Sheet Revisions	Colorado Department of Transportation	As Constructed
File Name: 19339_Grading.dgn	Date: / Comments / Init.	4670 N. Holly, Denver, CO 80216, Phone: 303-398-6767 FAX: 303-398-6781	No Revisions:
Horiz. Scale: 1:50 Vert. Scale: As Noted		Region 1 KK	Revised:
LAWRENCE / TSIOUVARAS SIMMONS HOLDERNESS CONSULTING ENGINEERS			Void:

I-70 OVER HAVANA STREET DESIGN-BUILD			
GRADING PLAN			
Designer: R. HARR	Structure Numbers		
Detailer: R. HARR			
Sheet Subset: GRADE	Subset Sheets: 1 of 4		

Project No./Code
FBR 0704-230
19339
Sheet Number 131

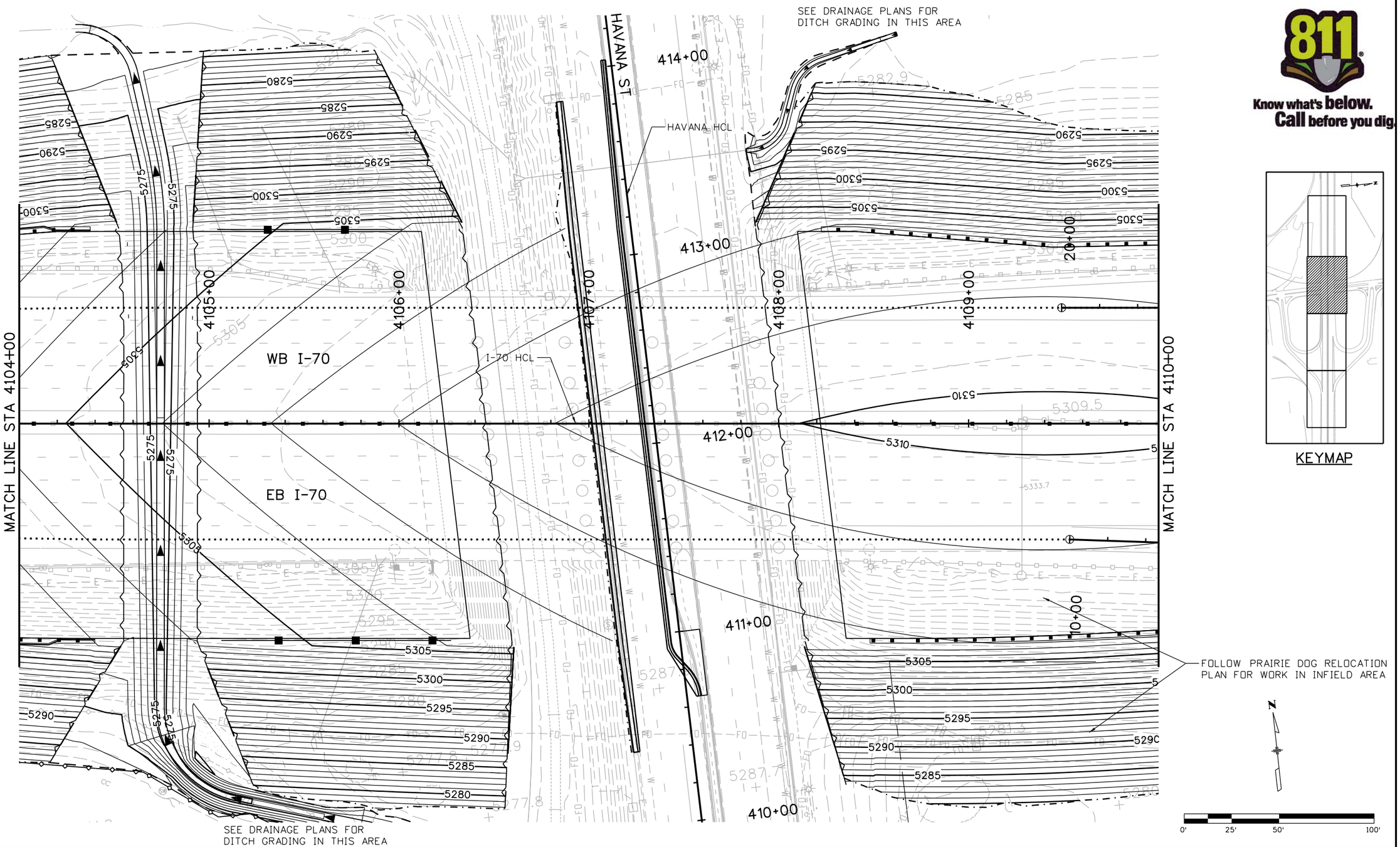

Know what's below. Call before you dig.

KEYMAP

RFC02 JUNE, 2015 (REVIEW)

bob.harr 12:00:15 PM P:\13033540B - I-70 over Havana DB\19339\Design\Drawings\19339_Grading.dgn

Print Date: 6/17/2015	Sheet Revisions	Colorado Department of Transportation	As Constructed
File Name: 19339_Grading.dgn	Date: / Comments / Init.	4670 N. Holly, Denver, CO 80216, Phone: 303-398-6767 FAX: 303-398-6781	No Revisions:
Horiz. Scale: 1:50 Vert. Scale: As Noted		Region 1 KK	Revised:
LAWRENCE TSIOUVARAS SIMMONS HOLDERNESS CONSULTING ENGINEERS			Void:

I-70 OVER HAVANA STREET DESIGN-BUILD			
GRADING PLAN			
Designer: R. HARR	Structure Numbers		
Detailer: R. HARR			
Sheet Subset: GRADE	Subset Sheets: 2 of 4		

Project No./Code
FBR 0704-230
19339
Sheet Number 132

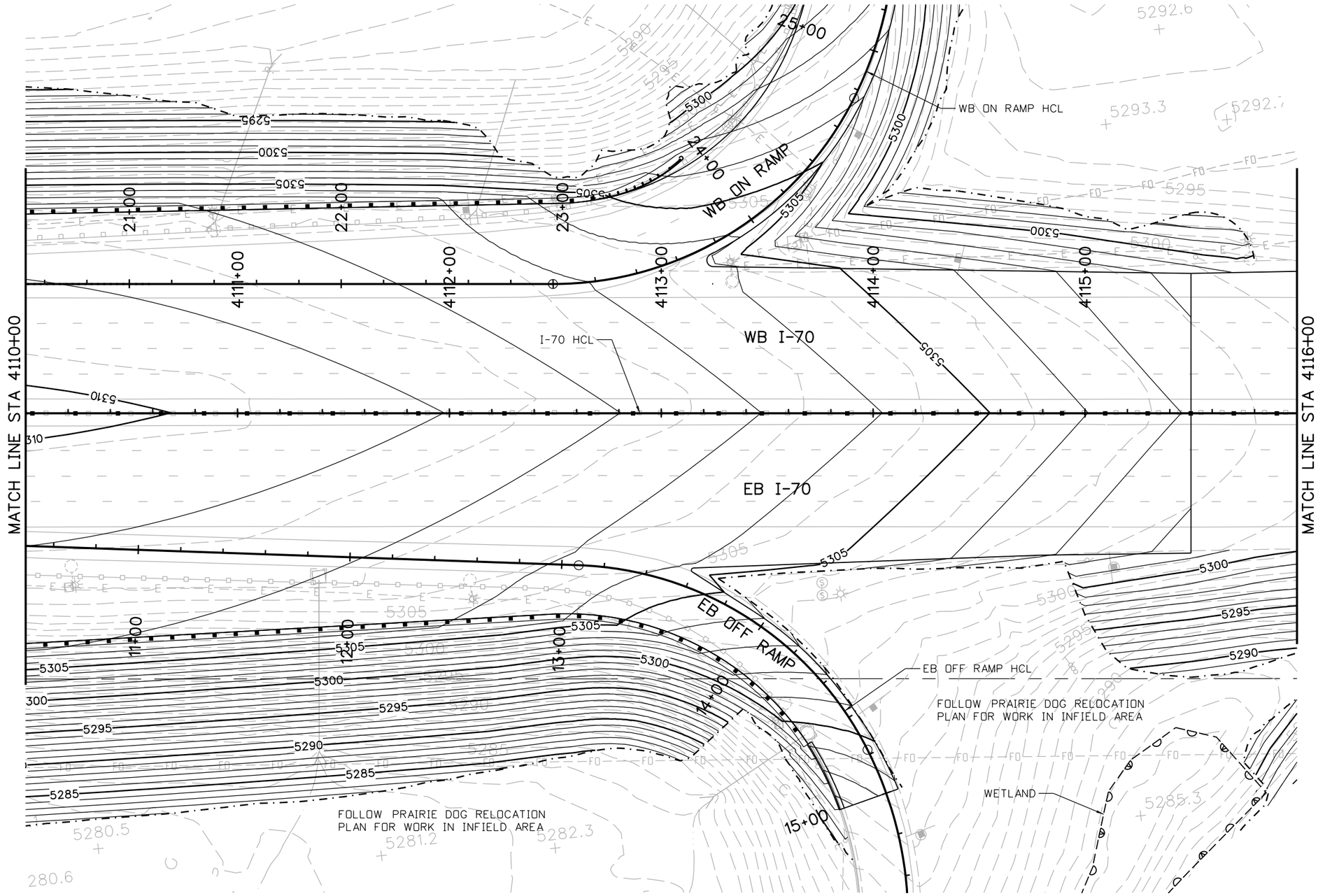

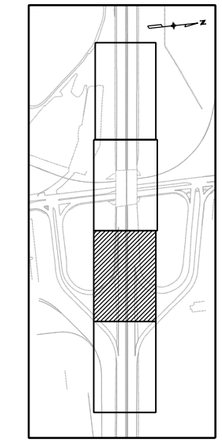

KEYMAP

RFC02 JUNE, 2015 (REVIEW)

bob.harr 12:00:20 PM P:\13033540B - I-70 over Havana DB\19339\Design\Drawings\19339_Grading.dgn

Print Date: 6/17/2015	Sheet Revisions	Colorado Department of Transportation	As Constructed
File Name: 19339_Grading.dgn	Date: / Comments / Init.	4670 N. Holly, Denver, CO 80216, Phone: 303-398-6767 FAX: 303-398-6781	No Revisions:
Horiz. Scale: 1:50 Vert. Scale: As Noted		Region 1 KK	Revised:
TSIOUVARAS SIMMONS HOLDERNESS CONSULTING ENGINEERS			Void:

I-70 OVER HAVANA STREET DESIGN-BUILD				Project No./Code
GRADING PLAN				FBR 0704-230
Designer:	R. HARR	Structure Numbers		19339
Detailer:	R. HARR			
Sheet Subset:	GRADE	Subset Sheets:	3 of 4	Sheet Number 133

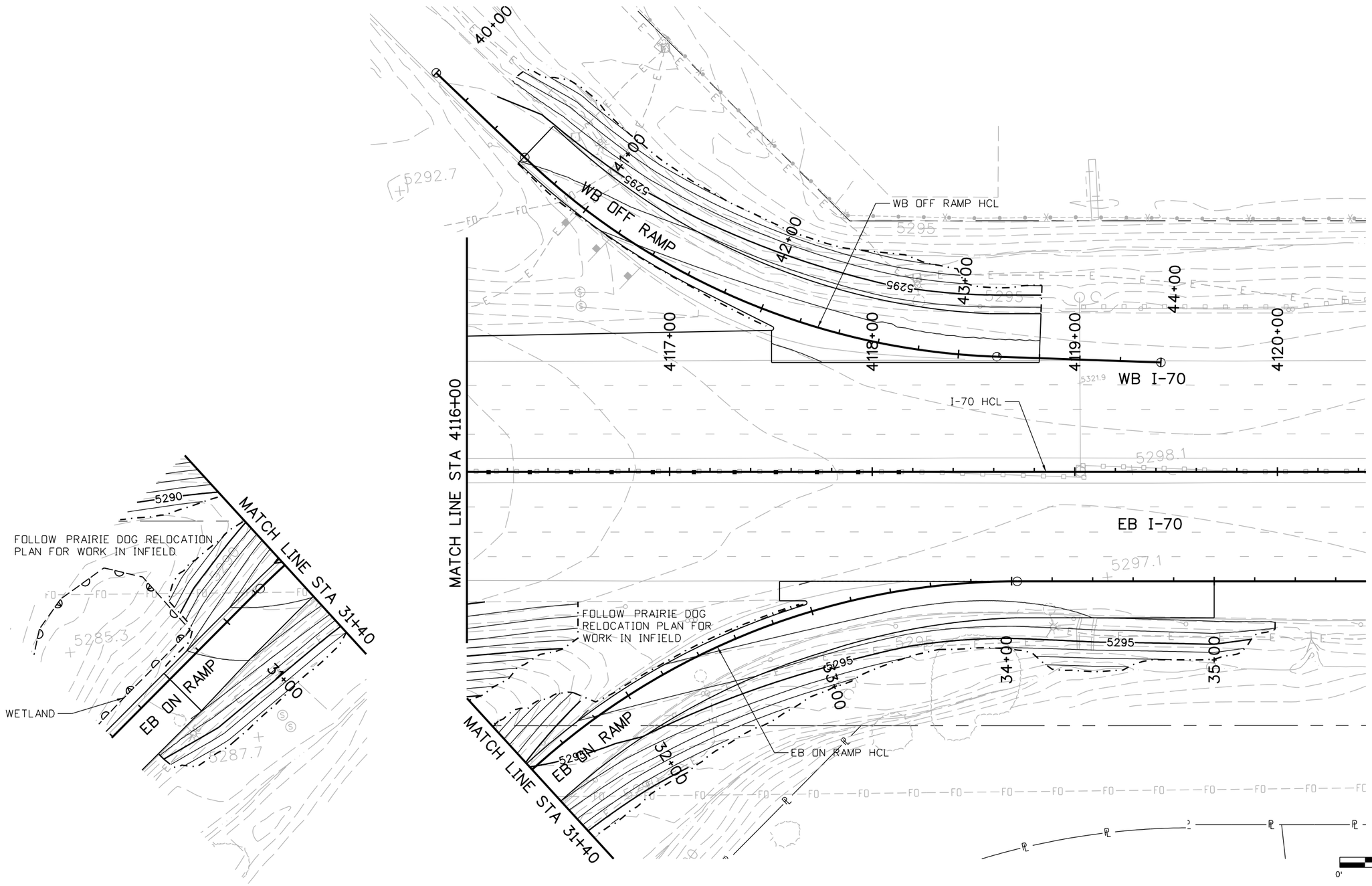

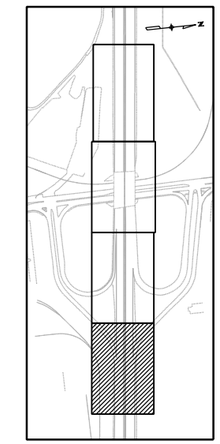

Know what's below. Call before you dig.

RFC02 JUNE, 2015 (REVIEW)

bob.harr 12:00:24 PM P:\13033540B - I-70 over Havana DB\19339\Design\Drawings\19339_Grading.dgn

Print Date: 6/17/2015	Sheet Revisions	Colorado Department of Transportation	As Constructed
File Name: 19339_Grading.dgn	Date: / Comments / Init.	4670 N. Holly, Denver, CO 80216, Phone: 303-398-6767 FAX: 303-398-6781	No Revisions:
Horiz. Scale: 1:50 Vert. Scale: As Noted		Region 1 KK	Revised:
TSIOUVARAS SIMMONS HOLDERNESS CONSULTING ENGINEERS			Void:

I-70 OVER HAVANA STREET DESIGN-BUILD			
GRADING PLAN			
Designer: R. HARR	Structure Numbers		
Detailer: R. HARR			
Sheet Subset: GRADE	Subset Sheets: 4 of 4		

Project No./Code
FBR 0704-230
19339
Sheet Number 134

GENERAL NOTES:

1. DRAINAGE FACILITIES SHALL BE CONSTRUCTED IN ACCORDANCE WITH CDOT STANDARD SPECIFICATIONS, CDOT STANDARD PLANS - M&S STANDARDS UNLESS OTHERWISE NOTED.

2. THE APPLICABLE BEST MANAGEMENT PRACTICES (BMPS) FOR TEMPORARY EROSION CONTROL SHALL BE APPLIED DURING EACH CONSTRUCTION PHASE, IN ACCORDANCE WITH M-208-1. REFER TO THE PROJECT STORMWATER MANAGEMENT PLAN.

3. TEMPORARY PIPE, IF REQUIRED, SHALL BE OF THE SIZE SHOWN ON THE PLANS WITH MATERIAL OF THE CONTRACTOR'S CHOICE, UNLESS SPECIFIED ON THE PLAN. TEMPORARY PIPE SHALL BE MAINTAINED BY THE CONTRACTOR UNTIL THE PERMANENT PIPE IS INSTALLED.

4. EACH DRAINAGE STRUCTURE HAS A STRUCTURE IDENTIFIER SUCH AS XXXK#, WHERE XXX REFERS TO THE STRUCTURE TRUNCATED STATION, K IS THE STRUCTURE TYPE, AND # IS A SEQUENCE NUMBER. STRUCTURE TYPES AND ASSOCIATED REFERENCE POINTS ARE AS FOLLOWS:

E - EMBANKMENT PROTECTOR TYPE 3	UPSTREAM FES INVERT AT CENTERLINE
F - CONCRETE FLARED END SECTION	AS SHOWN ON THIS SHEET
C - CONCRETE COLLAR	AS SHOWN THIS SHEET

5. DISCREPANCIES FOUND BETWEEN THIS PLAN AND THE FIELD CONDITIONS SHALL BE BROUGHT TO THE ATTENTION OF THE DESIGN MANAGER. REVISED PLANS SHALL BE ISSUED ACCORDING TO PROJECT QUALITY MANAGEMENT PROCEDURES FOR THE CONSTRUCTION PHASE.

6. REINFORCED CONCRETE PIPE SHALL BE A MINIMUM OF CLASS III. MAXIMUM FILL HEIGHTS SHALL BE IN ACCORDANCE WITH M-603-2.

7. STANDARD PIPE JOINTS SHALL BE BELL AND SPIGOT OR TONGUE AND GROOVE. JOINTS FOR ALL CIRCULAR REINFORCED CONCRETE PIPES SHALL BE MADE WITH CONFINED RUBBER GASKETS CONFORMING TO CDOT STANDARD SPECIFICATION 705.3.

8. A CONCRETE COLLAR SHALL BE USED TO MAKE CONNECTION TO AT A NON-STANDARD JOINT AND TO EXISTING PIPE.

9. FLOW CHANNELS ARE REQUIRED THROUGH MANHOLES AND INLETS USED AS MANHOLES (PER M-604-20).

10. EXCAVATION, BEDDING AND BACKFILL FOR DRAINAGE FACILITIES SHALL BE IN ACCORDANCE WITH CDOT STANDARD PLAN M-206-1.

11. THE CONTRACTOR SHALL PROTECT ALL WORK AREAS AND FACILITIES FROM WATER AT ALL TIMES. AREAS AND FACILITIES SUBJECTED TO FLOODING, REGARDLESS OF THE SOURCE OF WATER, SHALL BE PROMPTLY DEWATERED AND RESTORED AT NO COST TO THE OWNER.

12. UNLESS OTHERWISE NOTED, EXISTING DRAINAGE FACILITIES SHALL REMAIN AND BE PROTECTED IN PLACE. ANY DAMAGE TO EXISTING UTILITIES OR STRUCTURES WILL BE REPAIRED AT THE CONTRACTOR'S EXPENSE.

13. THE DECISION TO BRACE OR SHORE THE PIPE EXCAVATION SHALL BE THE CONTRACTOR'S RESPONSIBILITY. ALL WORK SHALL BE IN ACCORDANCE WILL ALL STATE AND FEDERAL OSHA REGULATIONS, THE CONTRACTOR SHALL PROTECT EXISTING UTILITIES AND STRUCTURES FOR THE PROPOSED EXCAVATION DURING CONSTRUCTION.

14. ALL FLARED END SECTIONS SHALL BE MECHANICALLY RESTRAINED PER CDOT STANDARD DRAWING M-603-10.

LEGEND:

XXXXK#	STRUCTURE IDENTIFICATION NUMBER
XXX	ROUNDED ADJACENT ROADWAY STATION
K	STRUCTURE TYPE (SEE NOTE 4)
#	NUMERIC IDENTIFIER
	RIPRAP
	PROPOSED STORM SEWER
	PROPOSED DRAINAGE DITCH (FLOW DIRECTION)
	EXISTING STORM SEWER
	EXISTING DRAINAGE DITCH/SWALE

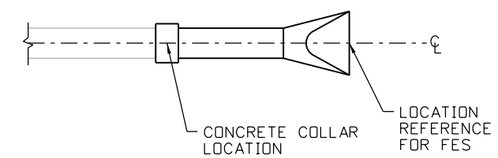

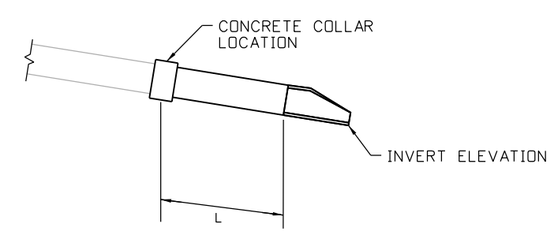

DEFINITION OF PIPE LENGTH AND HORIZONTAL & VERTICAL REFERENCE POINTS

L=ACTUAL PIPE LENGTH

RFC02 JUNE, 2015 (REVIEW)

larry.nichols 4:35:45 PM P:\13033540B - I-70 over Havana DB\19339\Hydraulics\Drawings\19339Hyd_DRGEN.dgn

Print Date: 6/19/2015	Sheet Revisions			Colorado Department of Transportation	As Constructed
File Name: 19339Hyd_DRGEN.dgn	Date:	Comments	Init.	4670 N. Holly Denver, CO 80216 Phone: 303-398-6767 FAX: 303-398-6781	No Revisions:
Horiz. Scale: 1:100 Vert. Scale: As Noted				Region 1 KK	Revised:
LAWRENCE TSIOUVARAS SIMMONS HOLDERNESS CONSULTING ENGINEERS					Void:

I-70 OVER HAVANA STREET DESIGN-BUILD DRAINAGE GENERAL NOTES			Project No./Code
Designer: B. Carroll	Structure Numbers		FBR 0704-230
Detailer: L. Nichols			19339
Sheet Subset: DRNG	Subset Sheets: D01of 8		Sheet Number 135

STRUCTURE QUANTITIES

STRUCTURE NUMBER	ALIGNMENT NAME FOR STATION-OFFSET CALL OUT	STATION-OFFSET	18" FLEXIBLE PIPE	REINFORCED CONCRETE PIPE 18"	REINFORCED CONCRETE END SECTIONS 18"	RIPRAP D_{50} 9"	GEOTEXTILE (DRAINAGE) (CLASS 2)	CONCRETE SLOPE AND DITCH PAVING	DRY RUBBLE SLOPE AND DITCH PAVING	EMBANKMENT PROTECTOR (TYPE 3)	CURB TYPE 6 (SECTION M)	STRUCTURAL EXCAVATION	STRUCTURAL BACKFILL
			LF	LF	EA	CY	SY	CY	CY	EA	SY	CY	CY
4106F2	I-70 CL	4106+60.15, 240.44' RT		8	1	2	3					3	1
4104E1	I-70 CL	4103+91.50, 100.86' LT	91			1				1	35		
4104E2	I-70 CL	4102+78.51, 109.73' RT	55			1				1	35		
RR DITCH	N/A	N/A					904	31	131			162	
Wall Rundowns	N/A	N/A				9	19						
TOTALS			146	8	1	13	926	31	131	2	70	165	1

RFC02 JUNE, 2015 (REVIEW)

larry.nichols 4:35:46 PM P:\13033540B - I-70 over Havana DB\19339\Hydraulics\Drawings\19339Hyd_TABS.dgn

Print Date: 6/19/2015
File Name: 19339Hyd_TABS.dgn
Horiz. Scale: 1:50 Vert. Scale: As Noted

LAWRENCE
TSIOUVARAS SIMMONS HOLDERNESS
CONSULTING ENGINEERS

Sheet Revisions		
Date:	Comments	Init.

Colorado Department of Transportation
CDOT
4670 N. Holly
Denver, CO 80216
Phone: 303-398-6767 FAX: 303-398-6781
Region 1 KK

As Constructed
No Revisions:
Revised:
Void:

I-70 OVER HAVANA STREET DESIGN-BUILD
DRAINAGE TABS

Designer: B. Carroll
Detailer: L. Nichols
Structure Numbers
Sheet Subset: DRNG
Subset Sheets: D02of 8

Project No./Code
FBR 0704-230
19339
Sheet Number 136

PROFILE SHEET	LINE	ID	STATION OFFSET	ITEM	LENGTH	PAY DEPTH	NOTES
N/A	N/A	4104E1	4103+91.50, 100.86' LT	EMBANKMENT PROTECTOR TYPE 3			

NOTES:

1. STATION AND OFFSET POINTS REFERENCE THE I-70 CL GEOMETRIC CONTROL.

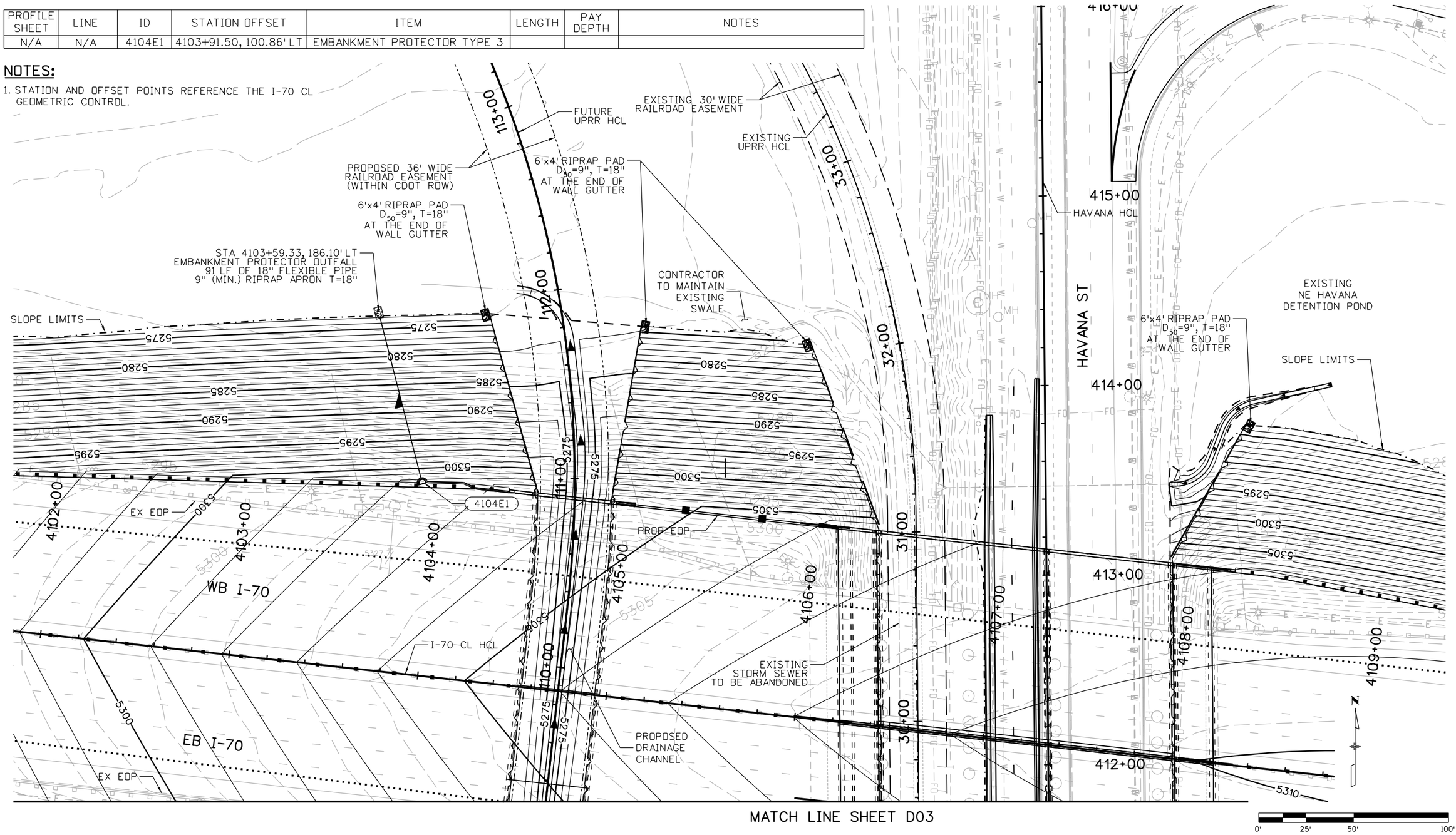

MATCH LINE SHEET D03

RFC02 JUNE, 2015 (REVIEW)

larry.nichols 4:35:47 PM P:\130335 4DB - I-70 over Havana DB\19339\Hydraulics\Drawings\19339Hyd_Plan.dgn

Print Date: 6/19/2015	Sheet Revisions		
File Name: 19339Hyd_Plan.dgn	Date:	Comments	Init.
Horiz. Scale: 1:50 Vert. Scale: As Noted			

LAWRENCE — TSIOUVARAS SIMMONS HOLDERNESS CONSULTING ENGINEERS

Colorado Department of Transportation
4670 N. Holly
Denver, CO 80216
Phone: 303-398-6767 FAX: 303-398-6781
Region 1 KK

As Constructed
No Revisions:
Revised:
Void:

I-70 OVER HAVANA STREET DESIGN-BUILD
DRAINAGE PLAN

Designer:	B. Carroll	Structure Numbers	
Detailer:	L. Nichols		
Sheet Subset:	DRNG	Subset Sheets:	D03of 8

Project No./Code
FBR 0704-230
19339
Sheet Number 137

MATCH LINE SHEET D02

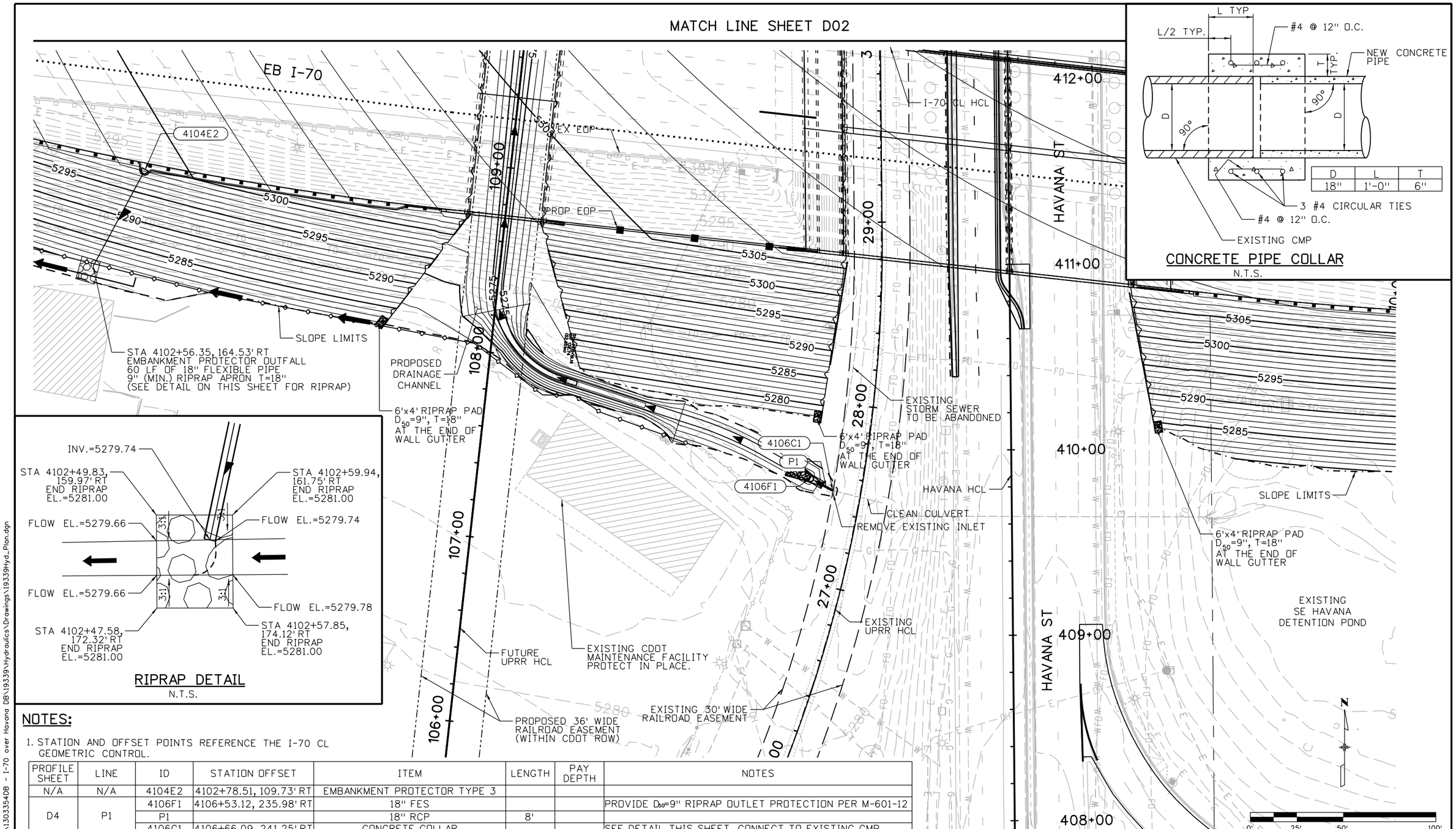

D	L	T
18"	1'-0"	6"

CONCRETE PIPE COLLAR
N.T.S.

RIPRAP DETAIL
N.T.S.

NOTES:

1. STATION AND OFFSET POINTS REFERENCE THE I-70 CL GEOMETRIC CONTROL.

PROFILE SHEET	LINE	ID	STATION OFFSET	ITEM	LENGTH	PAY DEPTH	NOTES
N/A	N/A	4104E2	4102+78.51, 109.73' RT	EMBANKMENT PROTECTOR TYPE 3			
D4	P1	4106F1	4106+53.12, 235.98' RT	18" FES			PROVIDE D_{50}=9" RIPRAP OUTLET PROTECTION PER M-601-12
		P1		18" RCP	8'		
		4106C1	4106+66.09, 241.25' RT	CONCRETE COLLAR			SEE DETAIL THIS SHEET, CONNECT TO EXISTING CMP

RFC02 JUNE, 2015 (REVIEW)

larry.nichols 4:35:48 PM P:\1303354OB - I-70 over Havana DB\19339\Hydraulics\Drawings\19339Hyd_Plan.dgn

Print Date: 6/19/2015
File Name: 19339Hyd_Plan.dgn
Horiz. Scale: 1:50 Vert. Scale: As Noted

LAWRENCE
TSIOUVARAS SIMMONS HOLDERNESS
CONSULTING ENGINEERS

Sheet Revisions

Date:	Comments	Init.

Colorado Department of Transportation
CDOT
4670 N. Holly
Denver, CO 80216
Phone: 303-398-6767 FAX: 303-398-6781
Region 1 KK

As Constructed
No Revisions:
Revised:
Void:

I-70 OVER HAVANA STREET DESIGN-BUILD
DRAINAGE PLAN

Designer: B. Carroll
Detailer: L. Nichols
Structure Numbers
Sheet Subset: DRNG
Subset Sheets: D04of 8

Project No./Code
FBR 0704-230
19339
Sheet Number 138

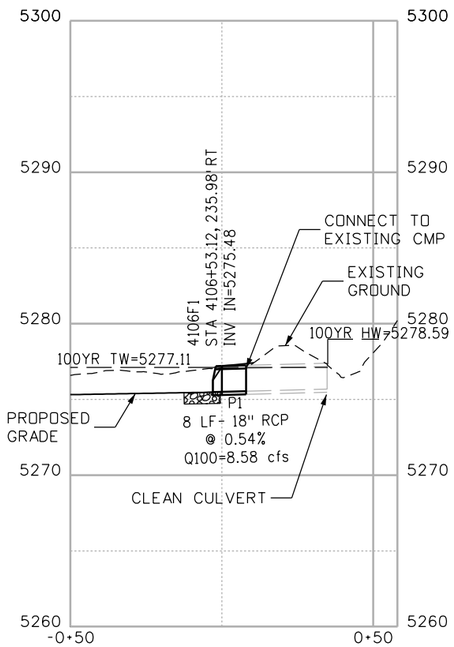

LINE P1

RFC02 JUNE, 2015 (REVIEW)

larry.nichols 4:35:49 PM P:\13033540B - I-70 over Havana DB\19339\Hydraulics\Drawings\19339Hyd_Profile.dgn

Print Date: 6/19/2015	Sheet Revisions	Colorado Department of Transportation	As Constructed
File Name: 19339Hyd_Profile.dgn	Date: / Comments / Init.	4670 N. Holly, Denver, CO 80216, Phone: 303-398-6767 FAX: 303-398-6781	No Revisions:
Horiz. Scale: 1:50 Vert. Scale: As Noted		Region 1 KK	Revised:
LAWRENCE TSIOUVARAS SIMMONS HOLDERNESS CONSULTING ENGINEERS			Void:

I-70 OVER HAVANA STREET DESIGN-BUILD DRAINAGE PROFILES			Project No./Code
Designer: J. Sloan	Structure Numbers		FBR 0704-230
Detailer: L. Nichols			19339
Sheet Subset: DRNG	Subset Sheets: D05of 8		Sheet Number 139

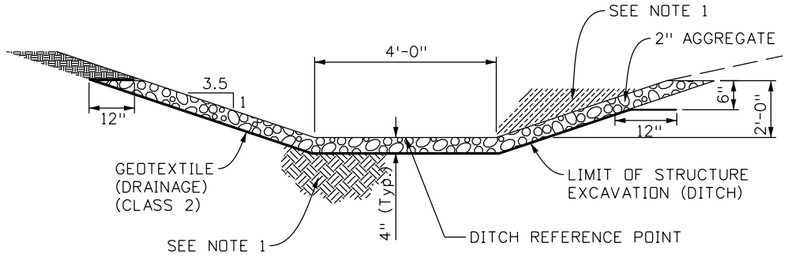

STA 3+42.77 TO STA 3+92.14

N.T.S.

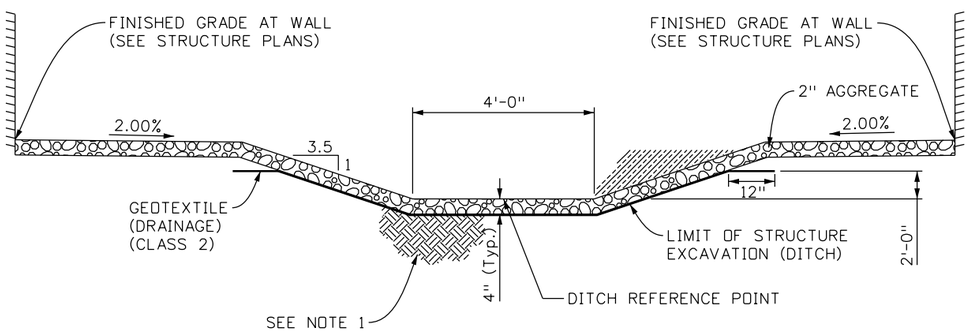

STA 1+25.50 TO STA 3+42.77

N.T.S.

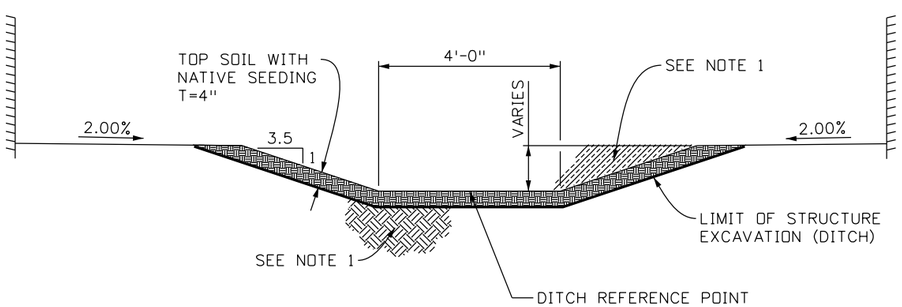

STA 0+00.00 TO STA 1+25.50

N.T.S.

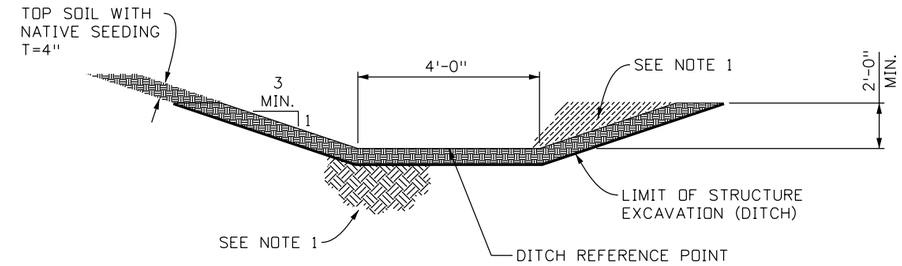

STA 5+12.20 TO STA 5+89.61

N.T.S.

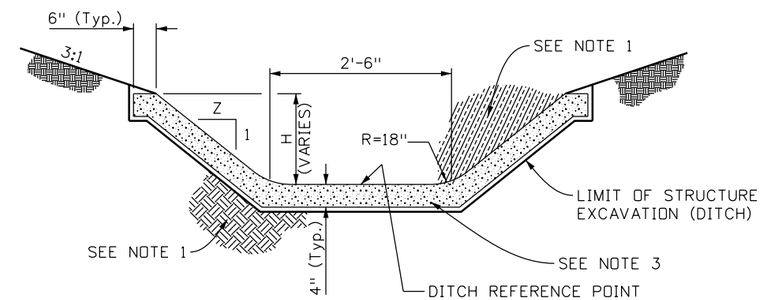

STATION	Z
3+92.14 TO 4+12.20	3.50-1.25
4+12.20 TO 4+92.20	1.25
4+92.20 TO 5+12.20	1.25-3.00

STA 3+92.14TO STA 5+12.20

N.T.S.

NOTES:

1. EXCAVATE DITCH SECTION INTO UNDISTURBED SOIL OR AFTER EMBANKMENT HAS BEEN PLACED AND COMPACTED TO PROPER DENSITY.
2. ALL STATIONING REFERENCES RAILROAD DITCH HCL.
3. CONCRETE DITCHES SHALL HAVE TRANSVERSE CONSTRUCTION JOINTS IN ACCORDANCE WITH M-412-1 EVERY 10 FEET ALONG THE LENGTH.

RFC02 JUNE, 2015 (REVIEW)

larry.nichols 4:35:50 PM P:\13033540B - I-70 over Havana DB\19339\Hydraulics\Drawings\19339Hyd_DitchDetails.dgn

Print Date: 6/19/2015
File Name: 19339Hyd_DitchDetails.dgn
Horiz. Scale: 1:5 Vert. Scale: As Noted

TSIOUVARAS SIMMONS HOLDERNESS
CONSULTING ENGINEERS

Sheet Revisions		
Date:	Comments	Init.

Colorado Department of Transportation
4670 N. Holly
Denver, CO 80216
Phone: 303-398-6767 FAX: 303-398-6781
Region 1 KK

As Constructed
No Revisions:
Revised:
Void:

I-70 OVER HAVANA STREET DESIGN-BUILD
DITCH TYPICAL SECTIONS

Designer: J. Sloan
Detailer: L. Nichols
Sheet Subset: DRNG
Structure Numbers
Subset Sheets: D06 of 8

Project No./Code
FBR 0704-230
19339
Sheet Number 140

RAILROAD DITCH HCL								
CURVE	POINT	STATION	NORTHING	EASTING	RADIUS	LENGTH	TANGENT	DELTA
	POB	0+00.00	454730.97	678917.01				
CURVE 1	PI	0+25.17	454729.48	678942.14	30.00'	41.89'	25.17'	80° 00'14" RT
	PT	0+41.89	454704.47	678945.04				
	PC	0+82.41	454664.23	678949.71				
CURVE 2	PI	1+05.06	454641.72	678952.32	200.00'	45.12'	22.65'	12° 55'30" RT
	PT	1+27.52	454619.21	678949.83				
	PC	3+76.57	454371.67	678922.46				
CURVE 3	PI	4+17.43	454331.06	678917.97	50.00'	68.52'	40.86'	78° 30'54" LT
	PT	4+45.09	454318.57	678956.87				
	PC	5+20.32	454295.57	679028.51				
CURVE 4	PI	5+40.75	454289.33	679047.96	200.00'	40.72'	20.43'	11° 39'55" RT
	PT	5+61.04	454279.28	679065.75				
	POE	6+12.20	454254.12	679110.29				

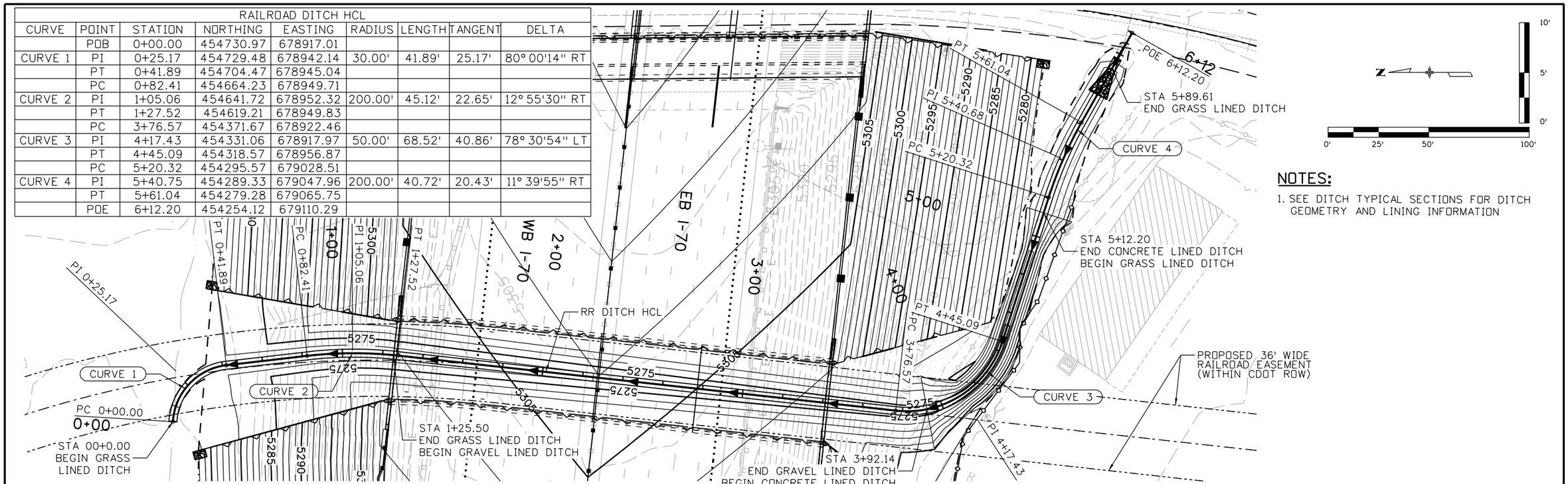

NOTES:

1. SEE DITCH TYPICAL SECTIONS FOR DITCH GEOMETRY AND LINING INFORMATION

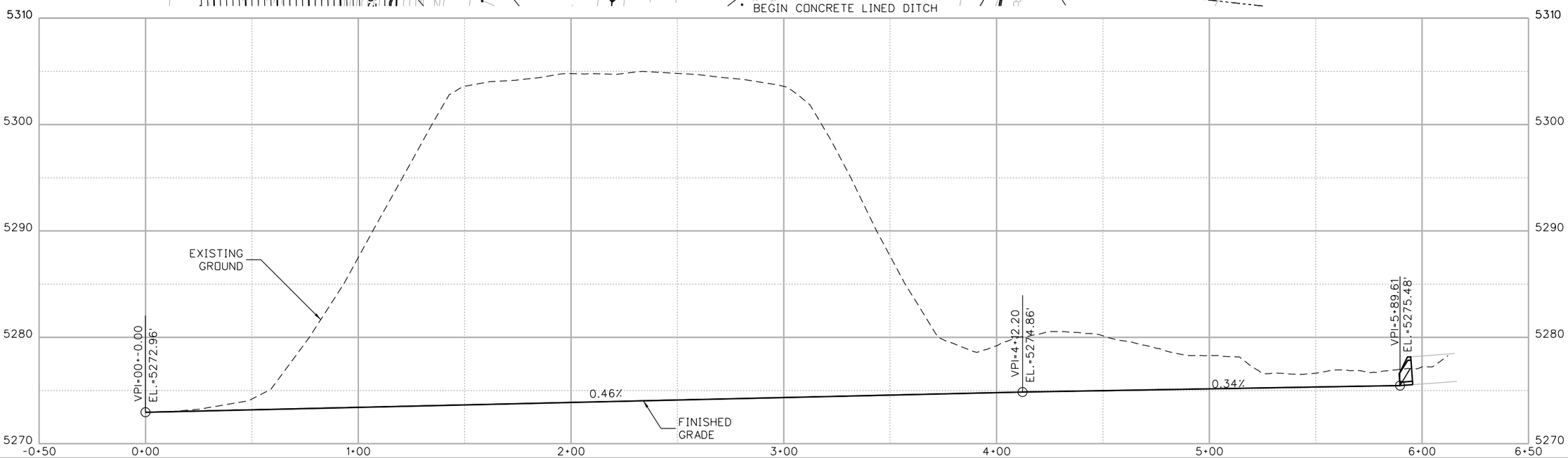

RFC02 JUNE, 2015 (REVIEW)

larry.nichols 4:35:52 PM P:\1303354DB - I-70 over Havana DB\19339\Hydraulics\Drawings\19339Hyd_DitchPnP.dgn

Print Date: 6/19/2015
File Name: 19339Hyd_DitchPnP.dgn
Horiz. Scale: 1:50 Vert. Scale: As Noted

LAWRENCE
TSIOUVARAS SIMMONS HOLDERNESS
CONSULTING ENGINEERS

Sheet Revisions		
Date:	Comments	Init.

Colorado Department of Transportation
CDOT
4670 N. Holly
Denver, CO 80216
Phone: 303-398-6767 FAX: 303-398-6781
Region 1 KK

As Constructed
No Revisions:
Revised:
Void:

I-70 OVER HAVANA STREET DESIGN-BUILD
DITCH PLAN AND PROFILE

Designer: J. Sloan
Detailer: L. Nichols
Sheet Subset: DRNG
Structure Numbers
Subset Sheets: D07 of 8

Project No./Code
FBR 0704-230
19339
Sheet Number 141

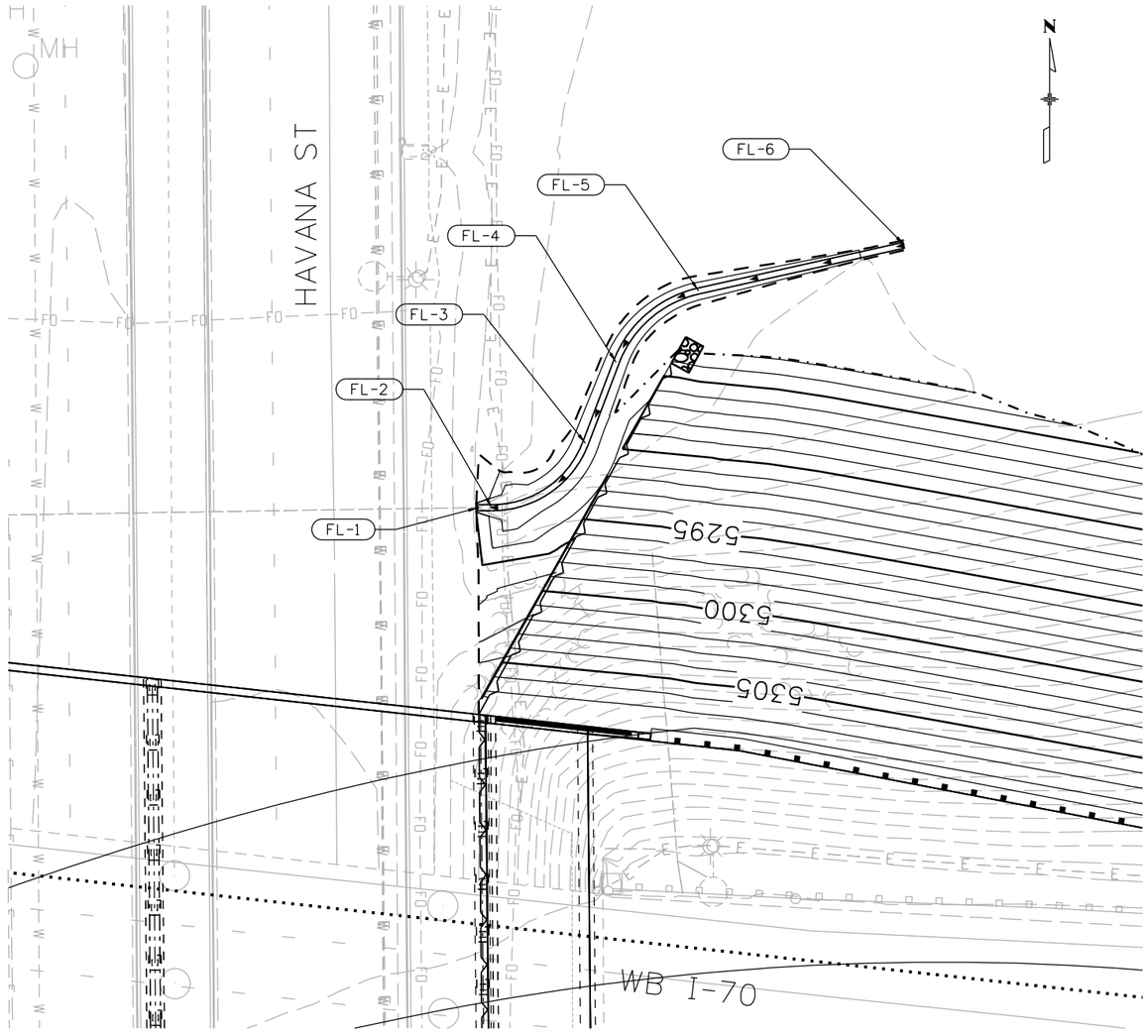

PLAN VIEW

SCALE: 1"=30'

DITCH CONTROL POINTS				
POINT	NORTHING	EASTING	ELEVATION	DESCRIPTION
FL-1	454628.31	679261.37	5282.44	POB OF DITCH
FL-2	454628.31	679264.09	5282.45	FLOWLINE PC
FL-3	454641.17	679282.80	5282.59	FLOWLINE PT
FL-4	454657.32	679288.94	5282.69	FLOWLINE PC
FL-5	454671.60	679305.43	5282.81	FLOWLINE PT
FL-6	454680.77	679346.54	5283.05	POE OF DITCH

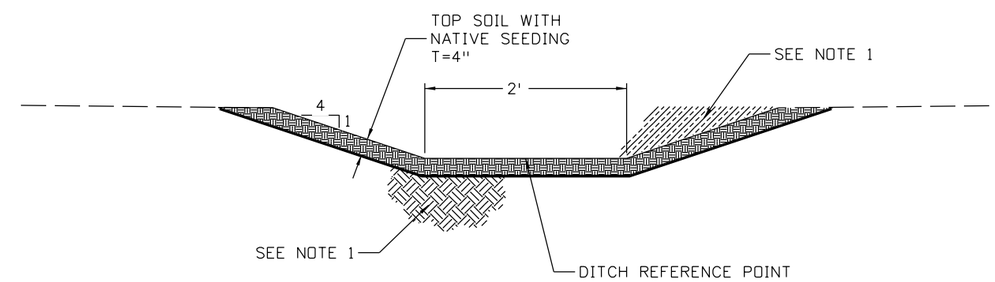

DITCH SECTION

N.T.S.

NOTES:

1. EXCAVATE DITCH SECTION INTO UNDISTURBED SOIL AND COMPACTED TO PROPER DENSITY.

RFC02 JUNE, 2015 (REVIEW)

larry.nichols 4:35:53 PM P:\13033540B - I-70 over Havana DB\19339\Hydraulics\Drawings\19339Hyd_DitchPnP.dgn

Print Date: 6/19/2015
File Name: 19339Hyd_DitchPnP.dgn
Horiz. Scale: 1:30 Vert. Scale: As Noted

LAWRENCE TSIOUVARAS SIMMONS HOLDERNESS CONSULTING ENGINEERS

Sheet Revisions		
Date:	Comments	Init.

Colorado Department of Transportation
4670 N. Holly
Denver, CO 80216
Phone: 303-398-6767 FAX: 303-398-6781
Region 1 KK

As Constructed
No Revisions:
Revised:
Void:

I-70 OVER HAVANA STREET DESIGN-BUILD
DITCH GRADING PLAN

Designer: J. Sloan
Detailer: L. Nichols
Sheet Subset: DRNG
Structure Numbers
Subset Sheets: D08 of 8

Project No./Code
FBR 0704-230
19339
Sheet Number 142

NOTE:

SEE LIGHTING PLANS FOR ELECTRICAL AND LIGHTING DETAIL.

SEE ITS PLANS FOR RAMP METERING DETAILS.

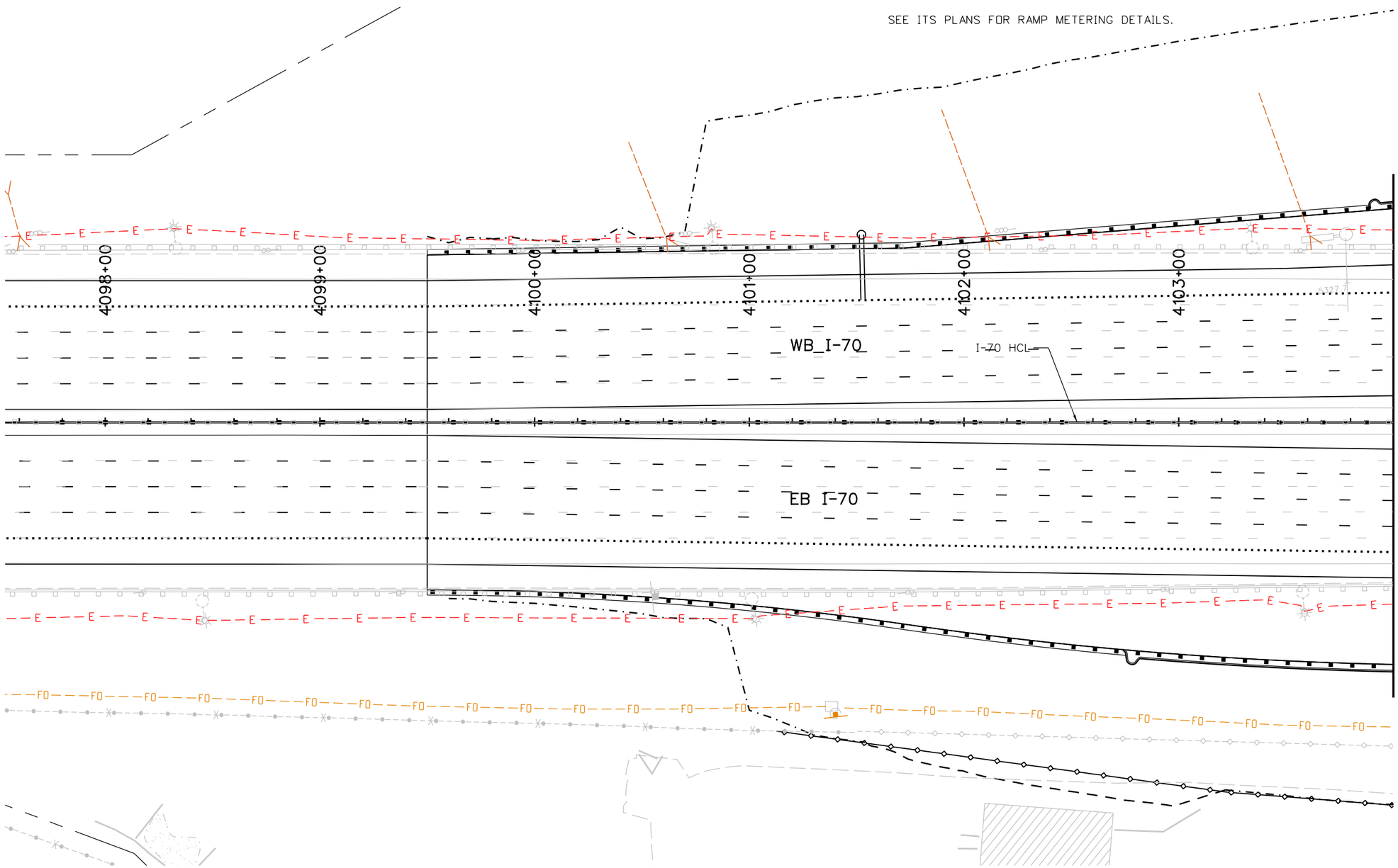

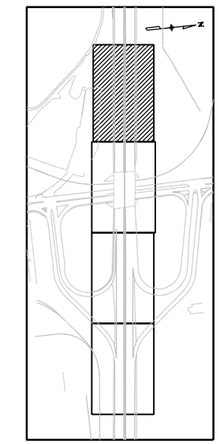

KEYMAP

0' 25' 50' 100'

RFC02 JUNE, 2015 (REVIEW)

bob.harr 12:07:01 PM P:\1303354DB - I-70 over Havana DB\19339\Utilities\Drawings\19339_Utilities.dgn

Print Date: 6/17/2015	Sheet Revisions		
File Name: 19339_Utilities.dgn	Date:	Comments	Init.
Horiz. Scale: 1:50 Vert. Scale: As Noted			
TSIOUVARAS SIMMONS HOLDERNESS CONSULTING ENGINEERS			

Colorado Department of Transportation
4670 N. Holly
Denver, CO 80216
Phone: 303-398-6767 FAX: 303-398-6781
Region 1 KK

As Constructed
No Revisions:
Revised:
Void:

I-70 OVER HAVANA STREET DESIGN-BUILD
UTILITY PLAN

Designer:	R. HARR	Structure Numbers	
Detailer:	L. NICHOLS		
Sheet Subset:	UTIL	Subset Sheets:	1 of 4

Project No./Code
FBR 0704-230
19339
Sheet Number 143

UTILITY POTHOLING LOG

Pothole #	Utility Type	Size	Depth to Top	Depth to Bottom	Source
PH 1	TELCO	4"OD	68"	72"	CDOT
PH 2	TELCO	6"OD	72"	78"	CDOT
PH 3	H2O	36"	108"	144"	CDOT
PH 4	ELE	Conc Cap	32"	48"	CDOT
PH 5	F/O	8"ODx2	51"	59"	CDOT
PH 6	H2O	16"	68"	86"	CDOT
PH 7	F/O	8"ODx2	69"	78"	CDOT
PH 8	F/O	see	remark	below	CDOT
PH 9	F/O	6"	91"	97"	LCCO
PH 10	F/O	6"ODx2	51"	57"	LCCO

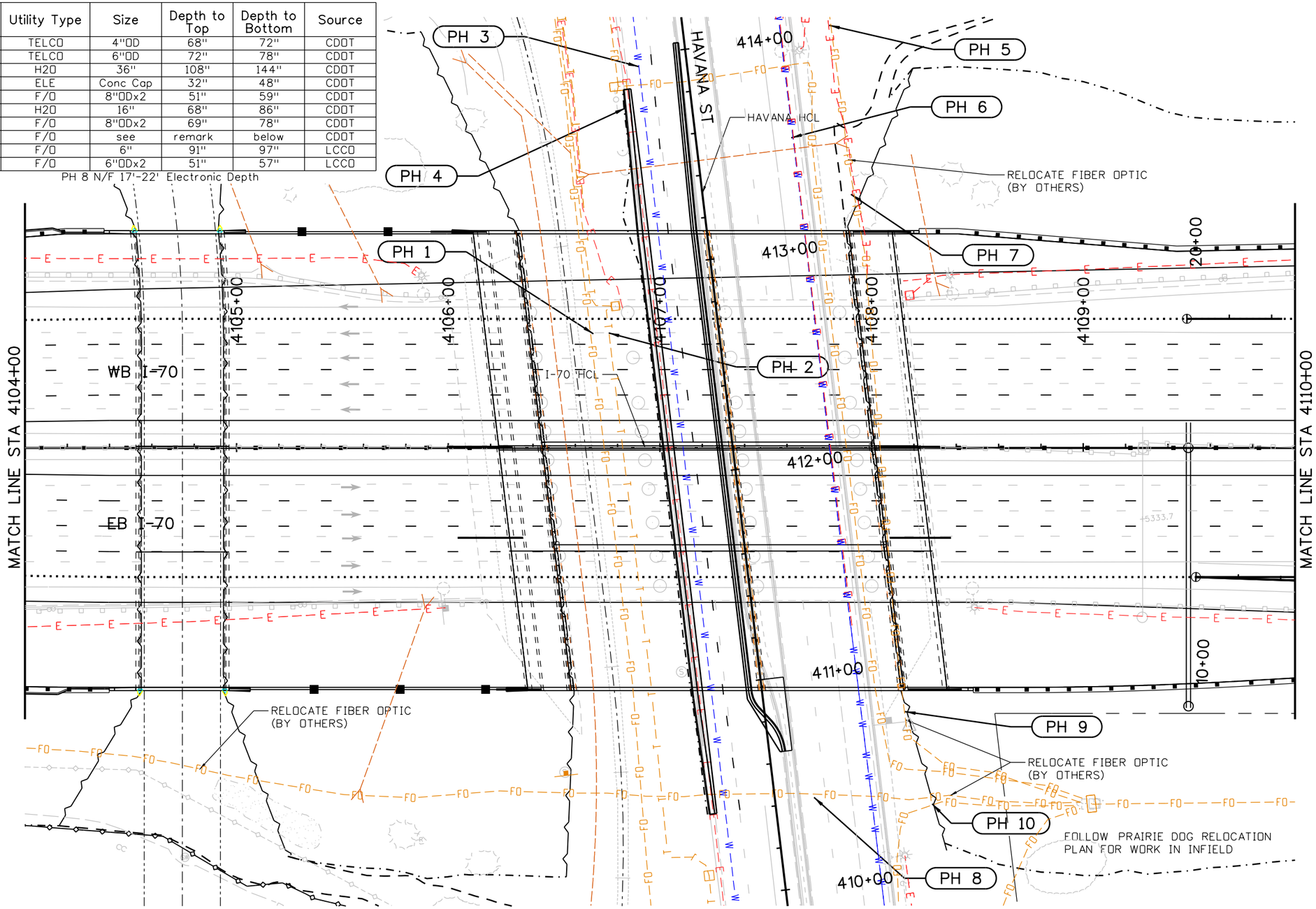

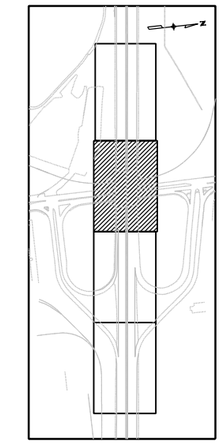

KEYMAP

RFC02 JUNE, 2015 (REVIEW)

bob.harr 12:07:00 PM P:\1303540B - I-70 over Havana DB\19339\Utilities\Drawings\19339_Utilities.dgn

Print Date: 6/17/2015	Sheet Revisions	Colorado Department of Transportation	As Constructed
File Name: 19339_Utilities.dgn	Date: / Comments / Init.	4670 N. Holly, Denver, CO 80216, Phone: 303-398-6767 FAX: 303-398-6781	No Revisions:
Horiz. Scale: 1:50 Vert. Scale: As Noted		Region 1 KK	Revised:
TSIOUVARAS SIMMONS HOLDERNESS CONSULTING ENGINEERS			Void:

I-70 OVER HAVANA STREET DESIGN-BUILD

UTILITY PLAN

Designer: R. HARR
Detailer: L. NICHOLS
Sheet Subset: UTIL
Structure Numbers
Subset Sheets: 2 of 4

Project No./Code
FBR 0704-230
19339
Sheet Number 144

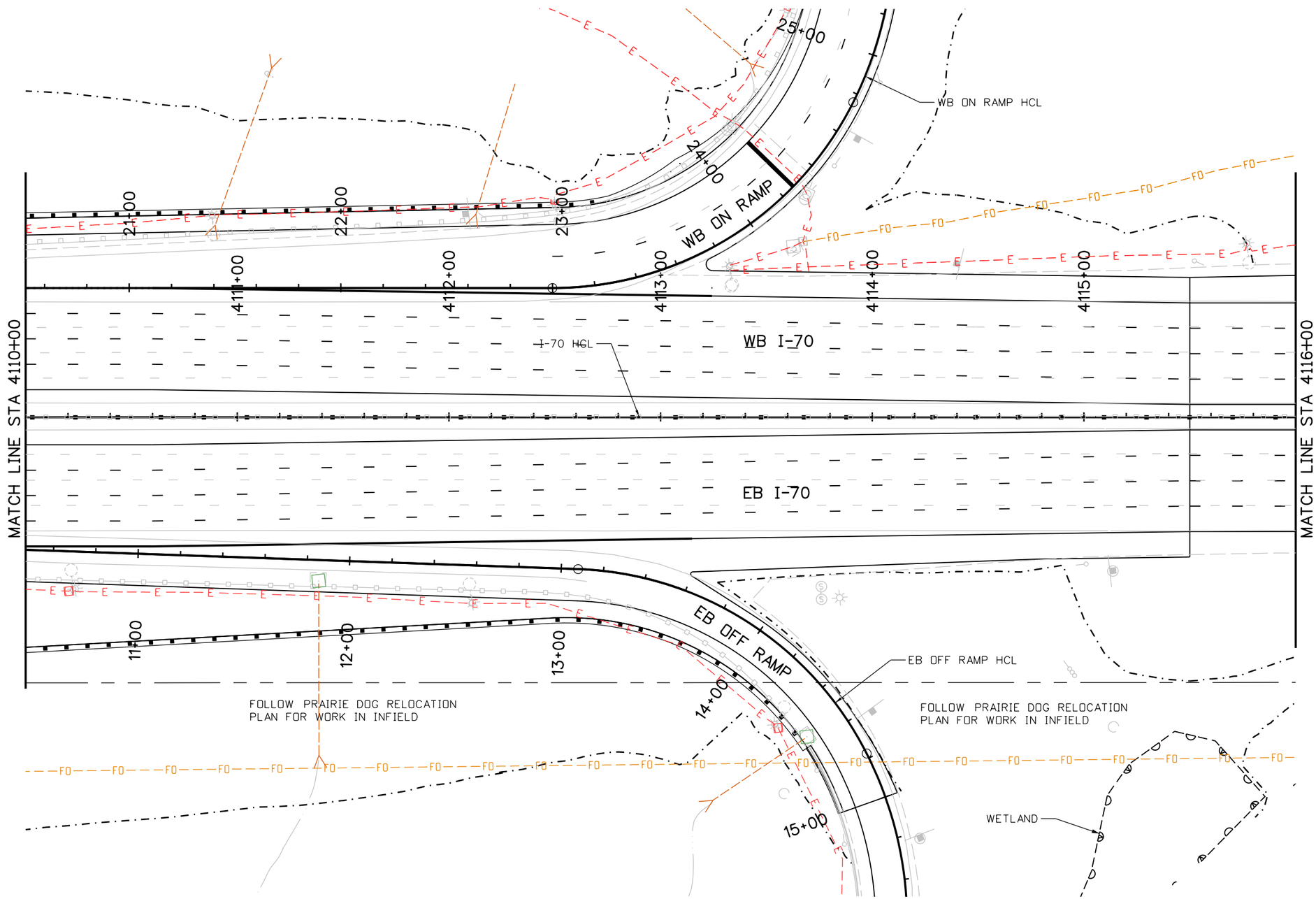

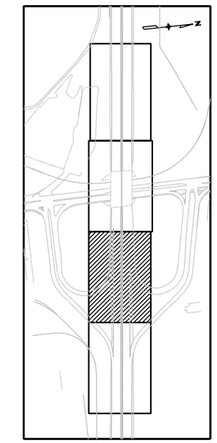

Know what's below. Call before you dig.

RFC02 JUNE, 2015 (REVIEW)

bob.harr 12:07:03 PM P:\13033540B - I-70 over Havana DB\19339\Utilities\Drawings\19339_Utilities.dgn

Print Date: 6/17/2015	Sheet Revisions	Colorado Department of Transportation	As Constructed
File Name: 19339_Utilities.dgn	Date: / Comments / Init.	4670 N. Holly, Denver, CO 80216, Phone: 303-398-6767 FAX: 303-398-6781	No Revisions:
Horiz. Scale: 1:50 Vert. Scale: As Noted		Region 1 KK	Revised:
TSIOUVARAS SIMMONS HOLDERNESS CONSULTING ENGINEERS			Void:

I-70 OVER HAVANA STREET DESIGN-BUILD			
UTILITY PLAN			
Designer: R. HARR	Structure Numbers		
Detailer: L. NICHOLS			
Sheet Subset: UTIL	Subset Sheets: 3 of 4		

Project No./Code
FBR 0704-230
19339
Sheet Number 145

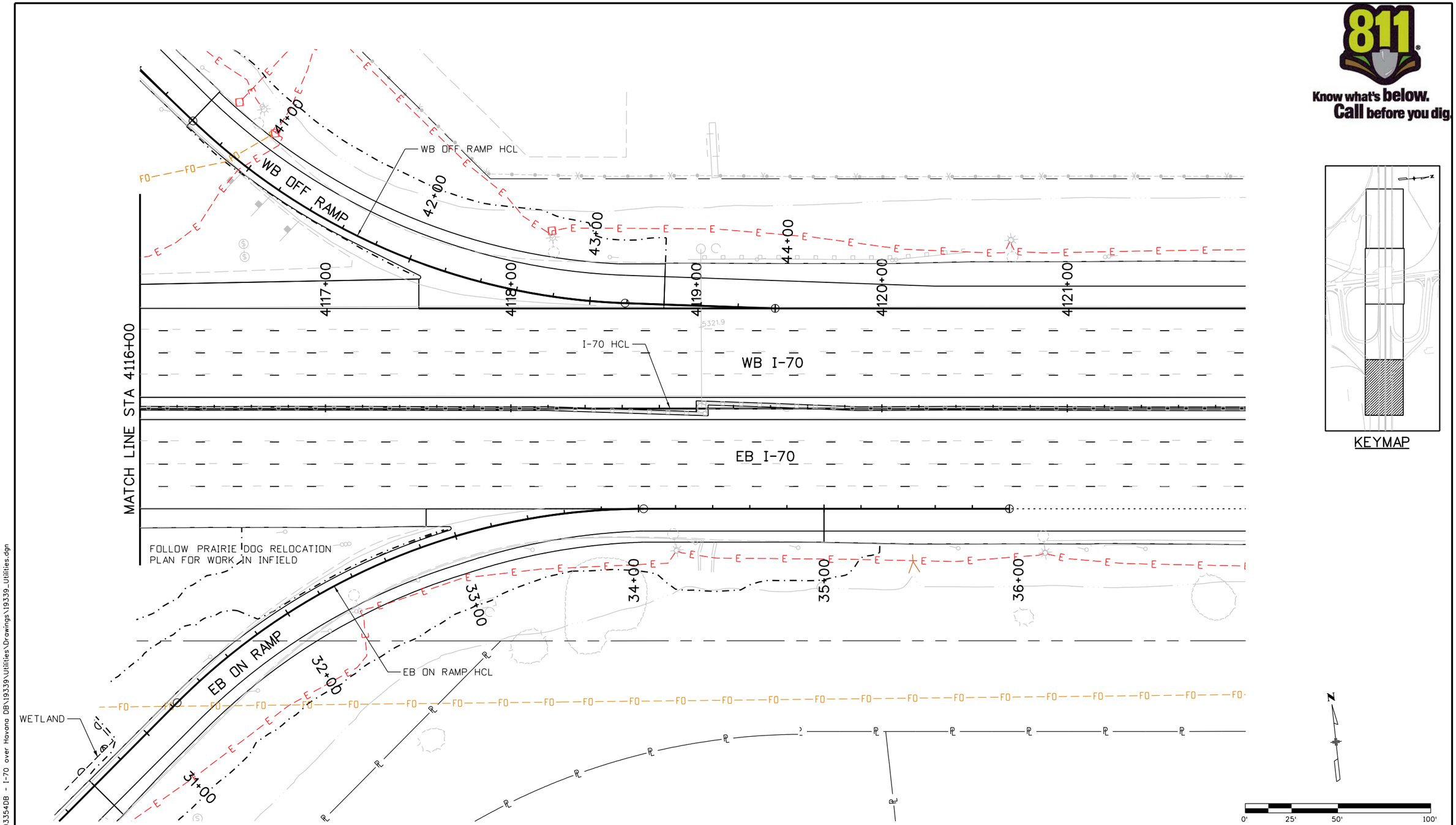

Know what's below. Call before you dig.

RFC02 JUNE, 2015 (REVIEW)

bob.harr 12:07:04 PM P:\1303354DB - I-70 over Havana DB\19339\Utilities\Drawings\19339_Utilities.dgn

Print Date: 6/17/2015	Sheet Revisions	Colorado Department of Transportation	As Constructed
File Name: 19339_Utilities.dgn	Date: / Comments / Init.	4670 N. Holly, Denver, CO 80216, Phone: 303-398-6767 FAX: 303-398-6781	No Revisions:
Horiz. Scale: 1:50 Vert. Scale: As Noted		Region 1 KK	Revised:
TSIOUVARAS SIMMONS HOLDERNESS CONSULTING ENGINEERS			Void:

I-70 OVER HAVANA STREET DESIGN-BUILD			
UTILITY PLAN			
Designer: R. HARR	Structure Numbers		
Detailer: L. NICHOLS			
Sheet Subset: UTIL	Subset Sheets: 4 of 4		

Project No./Code
FBR 0704-230
19339
Sheet Number 146

SIGN NO.	LOCATION	STATION/MP	DIRECTION	SIGN CODE	SIGN PANEL SIZE W"	x	H"	BACKGROUND COLOR	LEGEND	REMARKS	SIGN PANEL (SF) CLASS I	CLASS II	CLASS III	REMOVE GROUND SIGN EA	REMOVE SIGN PANEL EA	RESET GROUND SIGN EA	RESET SIGN PANEL EA	NO. POSTS	LENGTH OF POST(S) (TOTAL) LF	SIGN STEEL POST 2.5" NB-40 WITH SLIPBASE EACH P	P1	P2	LF	2.5" P2 EA 10'	12'	14'	LF
1	I-70	4100+58	R	R3-7bR(1000)	48	x	60	WHITE	RIGHT LANE MUST EXIT 1000 FT			20						1	12		1		12				
2	I-70	4101+50	L	RESET					CENTRAL PARK BOULEVARD EXIT ONLY	RESET TO NEW CANTILEVER STRUCTURE							1	C									
3	I-70	4106+00	R	W13-7(25)	36	x	60	YELLOW	RAMP WARNING ARROW 25 MPH			15						1	12		1		12				
4	I-70	4107+50	R	REMOVE					EXIT WARNING SPEED					1													
5	I-70	4109+28	L	RESET					PEORIA ST 3/4 MILE	REMOVE SIGN BRIDGE, RESET TO NEW SIGN BRIDGE				1			1	B									
6	I-70	4109+28	L	SPECIAL	102	x	30	GREEN	EXIT 280	INSTALL NEW PANEL ON NEW BRIDGE			22					B									
		W/#6		SPECIAL	114	x	96	GREEN	HAVANA STREET EXIT ONLY	WITH SIGN 6			76														
7	I-70	4109+50	C	REMOVE					SEQUENTIAL SIGN	REMOVE, WILL NOT BE REPLACED					1												
8	I-70	4113+50	R	RESET					EXIT 280	RESET PANEL TO NEW POSTS							1	2	24		2		24				
		W/#8		E13-1	96	x	24	YELLOW	25 MPH WARNING	MOUNT BELOW EXIT PANEL		16															
9	I-70	4114+50	L	RESET					ADDED LANE	RESET PANEL TO NEW POST							1	1	13		1		13				
10	WB ON RAMP	22+61	L	RESET					LANE ENDS	RESET PANEL TO NEW POST							1	1	13		1		13				
11	EB OFF RAMP	14+22	L	W1-8r	36	x	48	YELLOW	CHEVRON ALIGNMENT			12						1	11		1		11				
12	I-70	4109+50	R	W13-7(25)	36	x	60	YELLOW	RAMP WARNING ARROW 25 MPH	MOUNT ON POST OF SIGN BRIDGE		15						B									
13	I-70	4116+57	L	RESET					EXIT 280	RESET PANEL TO NEW POSTS WITH SIGN 19				1			1									
14	I-70	4119+05	L	REMOVE					ADVISORY SPEED	REMOVE, WILL NOT BE REPLACED					1												
15	WB OFF RAMP	40+92	R	W1-8r	36	x	48	YELLOW	CHEVRON ALIGNMENT	EXISTING TO BE REPLACED		12						1	11		1		11				
16	WB OFF RAMP	41+18	R	W1-8r	36	x	48	YELLOW	CHEVRON ALIGNMENT	EXISTING TO BE REPLACED		12						1	11		1		11				
17	WB OFF RAMP	41+33	R	W1-8r	36	x	48	YELLOW	CHEVRON ALIGNMENT	EXISTING TO BE REPLACED		12						1	11		1		11				
18	I-70	4116+40	R	W4-1r	48	x	48	YELLOW	MERGE	EXISTING TO BE REPLACED		16						1	13		1		13				
19	I-70	4117+00	L	RESET					EXIT 280	RESET FROM SIGN 13								2	24		2		24				
		W/#19		E13-1	96	x	24	YELLOW	ADVISORY SPEED	BELOW EXIT PANEL		16															
20	I-70	4147+63	R	REMOVE					I-225 AND PEORIA SIGNS	REMOVE EXISTING SIGN BRIDGE AND SIGNS				1													
21	I-70	4147+40	R	SPECIAL	96	x	30	GREEN	EXIT 281	NEW SIGN PANEL ON NEW CANTILEVER			20					C									
				SPECIAL	126	x	72	GREEN	PEORIA ST EXIT	WITH SIGN 21			63														
22	I-70	4156+85	R	SPECIAL	96	x	30	GREEN	EXIT 282	NEW SIGN PANEL ON NEW CANTILEVER			20					C									
				SPECIAL	162	x	174	GREEN	I-225 SOUTH AURORA COLO SPRINGS 3/4 MILE	INSTALL ON NEW CANTILEVER SIGN STRUCTURE			196														
									SHEET TOTALS		0	146	397	4	2	0	6	13	155	0	13	0	155	0	0	0	0

TABULATION OF SIGN STRUCTURES

SIGN NO	STATION	LOCATION	PANEL SIZE (W" X H")	BACKGROUND COLOR	LEGEND SUMMARY	SIGN PANEL CLASS III (SQ FT.)	REMOVE SIGN STRUCTURE	REMOVE SIGN PANEL	RESET SIGN STRUCTURE	RESET SIGN PANEL	RESET VMS CABINET	SIGN STRUCTURE: STRUCTURE TYPE	POLE DIAMETER	SPAN LENGTH	POLE HEIGHT	CORNER RADIUS	STRUCTURE NUMBER	CAISSON: DIAMETER	PAY LENGTH	COMMENTS
2	4101+50	WB I-70	150" X 138"	GREEN	CENTRAL PARK BLVD / EXIT ONLY		1			1		CANTILEVER	20"	35'	24'	8'	XXX	48"	21'	REMOVE OLD CANTILEVER, RESET PANEL TO NEW
5	4109+50	EB I-70	96" X 126"	GREEN	PEORIA STREET / 3/4 MILE		1			1		BRIDGE	24"	120'	27'	12'	XXX	54"	56'	ONE RESET PANEL AND ONE NEW PANEL ON NEW BRIDGE
6	W/#5	EB I-70	114" X 126"	GREEN	HAVANA / EXIT ONLY	100						CANTILEVER	20"	40'	23'	8'	XXX	48"	19'	REMOVE EXISTING BRIDGE, INSTALL NEW CANTILEVER
22	4156+85	EB I-70	186" X 210"	GREEN	AURORA/COLO SPGS / 3/4 MILE	216						CANTILEVER	24"	32'	27'	10'	XXX	48"	24'	INSTALL NEW CANTILEVER

RFC02 JUNE, 2015 (REVIEW)

bob.harr 12:01:08 PM P:\13033540B - I-70 over Havana DB\19339\Traffic_ITS\Drawings\19339_SignTab.dgn

Print Date: 6/17/2015
File Name: 19339_SignTab.dgn
Horiz. Scale: 1:1 Vert. Scale: As Noted

TSIOUVARAS SIMMONS HOLDERNESS
CONSULTING ENGINEERS

Sheet Revisions

Date:	Comments	Init.

Colorado Department of Transportation
4670 N. Holly
Denver, CO 80216
Phone: 303-398-6767 FAX: 303-398-6781
Region 1 KK

As Constructed
No Revisions:
Revised:
Void:

I-70 OVER HAVANA STREET DESIGN-BUILD
GENERAL INFORMATION
CONSTRUCTION TRAFFIC CONTROL

Designer: D. WOOLFALL
Detailer: A. MELNIC
Structure Numbers
Sheet Subset: PHASE
Subset Sheets: 1 of 1

Project No./Code
FBR 0704-230
19339
Sheet Number 147

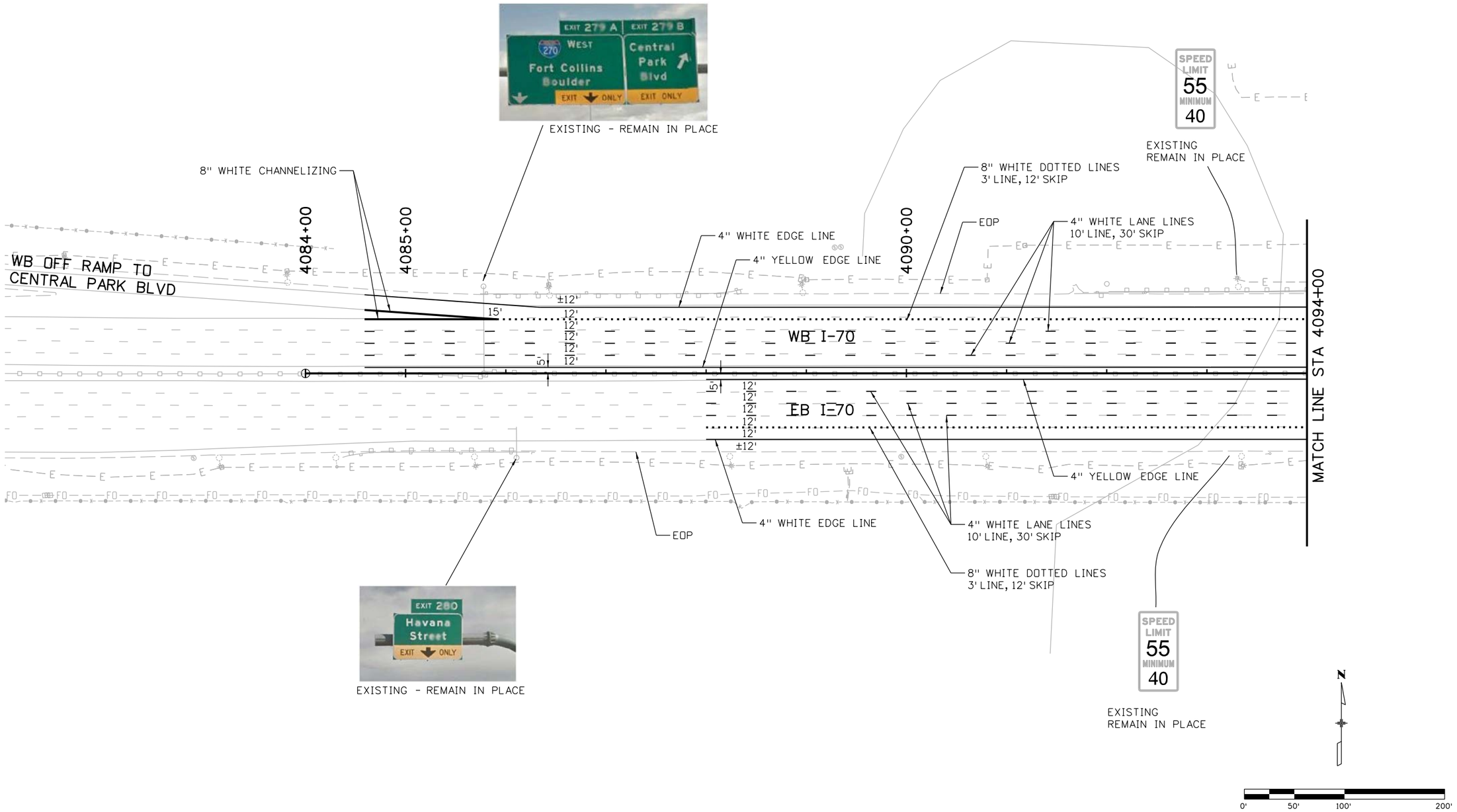

RFC02 JUNE, 2015 (REVIEW)

bob.harr 12:01:14 PM P:\1303354DB - I-70 over Havana DB\19339\Traffic_ITS\Drawings\19339_SignStripe.dgn

Print Date: 6/17/2015	Sheet Revisions		
File Name: 19339_SignStripe.dgn	Date:	Comments	Init.
Horiz. Scale: 1:100 Vert. Scale: As Noted			
LAWRENCE TSIOUVARAS SIMMONS HOLDERNESS CONSULTING ENGINEERS			

Colorado Department of Transportation
4670 N. Holly
Denver, CO 80216
Phone: 303-398-6767 FAX: 303-398-6781
Region 1 KK

As Constructed
No Revisions:
Revised:
Void:

I-70 OVER HAVANA STREET DESIGN-BUILD
SIGNING AND STRIPING PLAN

Designer:	D. WOOLFALL	Structure Numbers	
Detailer:	R. HARR		
Sheet Subset:	TRAF	Subset Sheets:	1 of 10

Project No./Code
FBR 0704-230
19339
Sheet Number 148

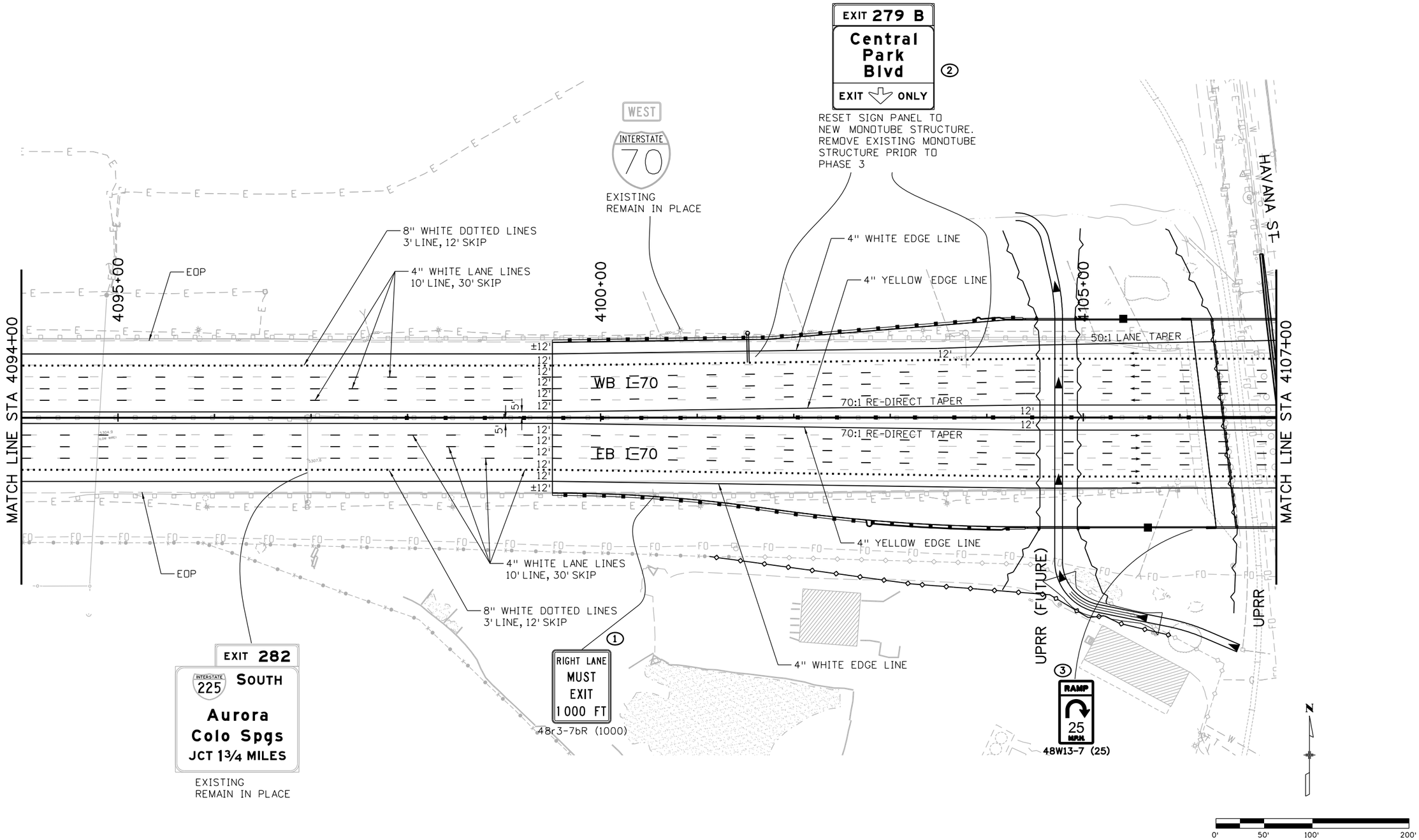

RFC02 JUNE, 2015 (REVIEW)

bob.harr 12:01:18 PM P:\13033540B - I-70 over Havana DB\19339\Traffic_ITS\Drawings\19339_SignStripe.dgn

Print Date: 6/17/2015	Sheet Revisions	Colorado Department of Transportation	As Constructed	I-70 OVER HAVANA STREET DESIGN-BUILD	Project No./Code
File Name: 19339_SignStripe.dgn	Date: / Comments / Init.	4670 N. Holly, Denver, CO 80216, Phone: 303-398-6767 FAX: 303-398-6781	No Revisions:	SIGNING AND STRIPING PLAN	FBR 0704-230
Horiz. Scale: 1:100 Vert. Scale: As Noted			Revised:	Designer: D. WOOLFALL / Structure Numbers	19339
LAWRENCE / TSIOUVARAS SIMMONS HOLDERNESS CONSULTING ENGINEERS		Region 1 KK	Void:	Detailer: R. HARR / Sheet Subset: TRAF / Subset Sheets: 2 of 10	Sheet Number 149

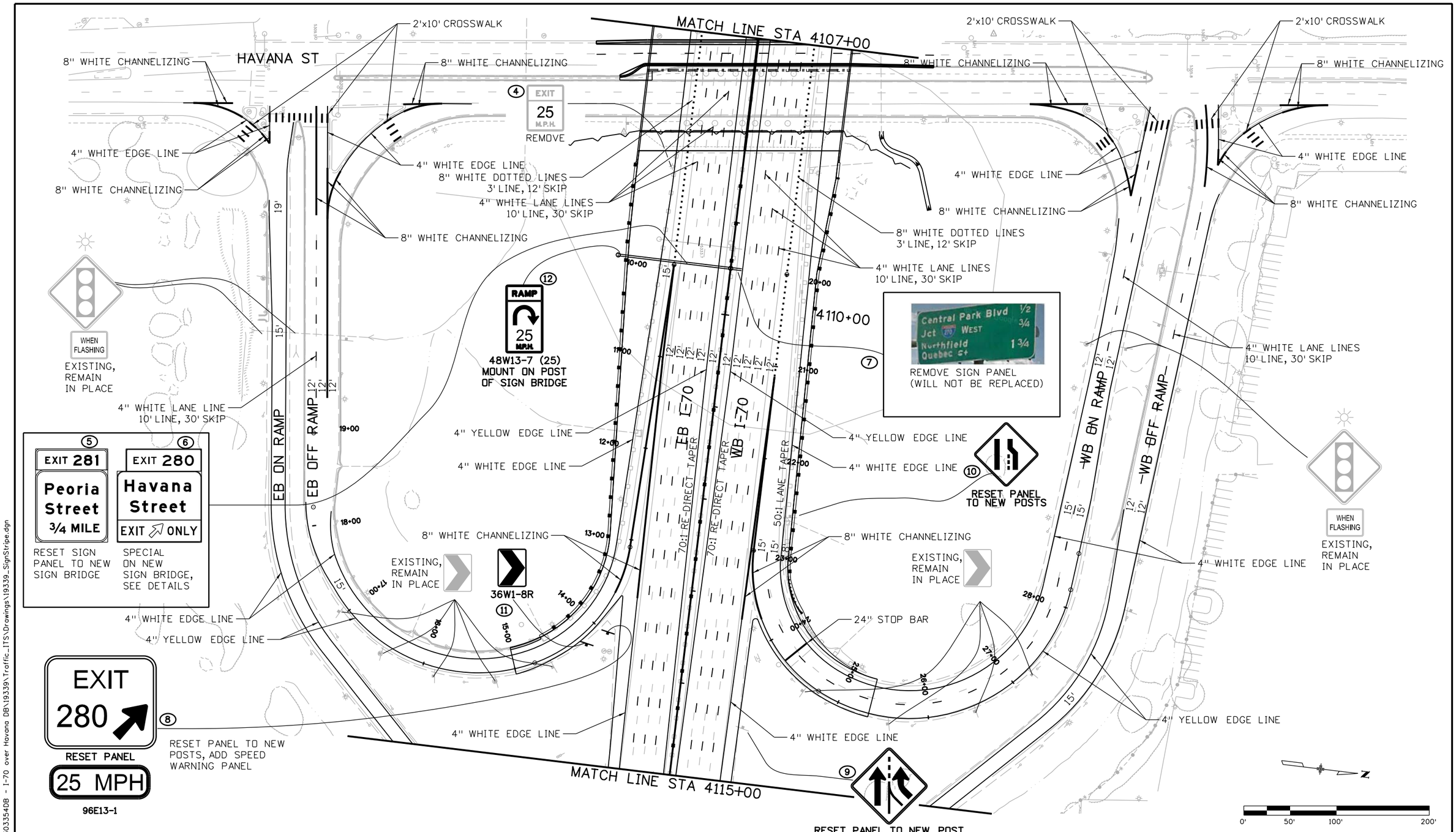

RFC02 JUNE, 2015 (REVIEW)

bob.harr 12:01:22 PM P:\13033540B - I-70 over Havana DB\19339\Traffic_ITS\Drawings\19339_SignStripe.dgn

Print Date: 6/17/2015	Sheet Revisions	Colorado Department of Transportation	As Constructed
File Name: 19339_SignStripe.dgn	Date: / Comments / Init.	4670 N. Holly, Denver, CO 80216, Phone: 303-398-6767 FAX: 303-398-6781	No Revisions:
Horiz. Scale: 1:100 Vert. Scale: As Noted		Region 1 KK	Revised:
LAWRENCE / TSIOUVARAS SIMMONS HOLDERNESS CONSULTING ENGINEERS			Void:

I-70 OVER HAVANA STREET DESIGN-BUILD	Project No./Code		
SIGNING AND STRIPING PLAN	FBR 0704-230		
Designer: D. WOOLFALL	Structure Numbers	19339	
Detailer: R. HARR			
Sheet Subset: TRAF	Subset Sheets: 3 of 10	Sheet Number 150	

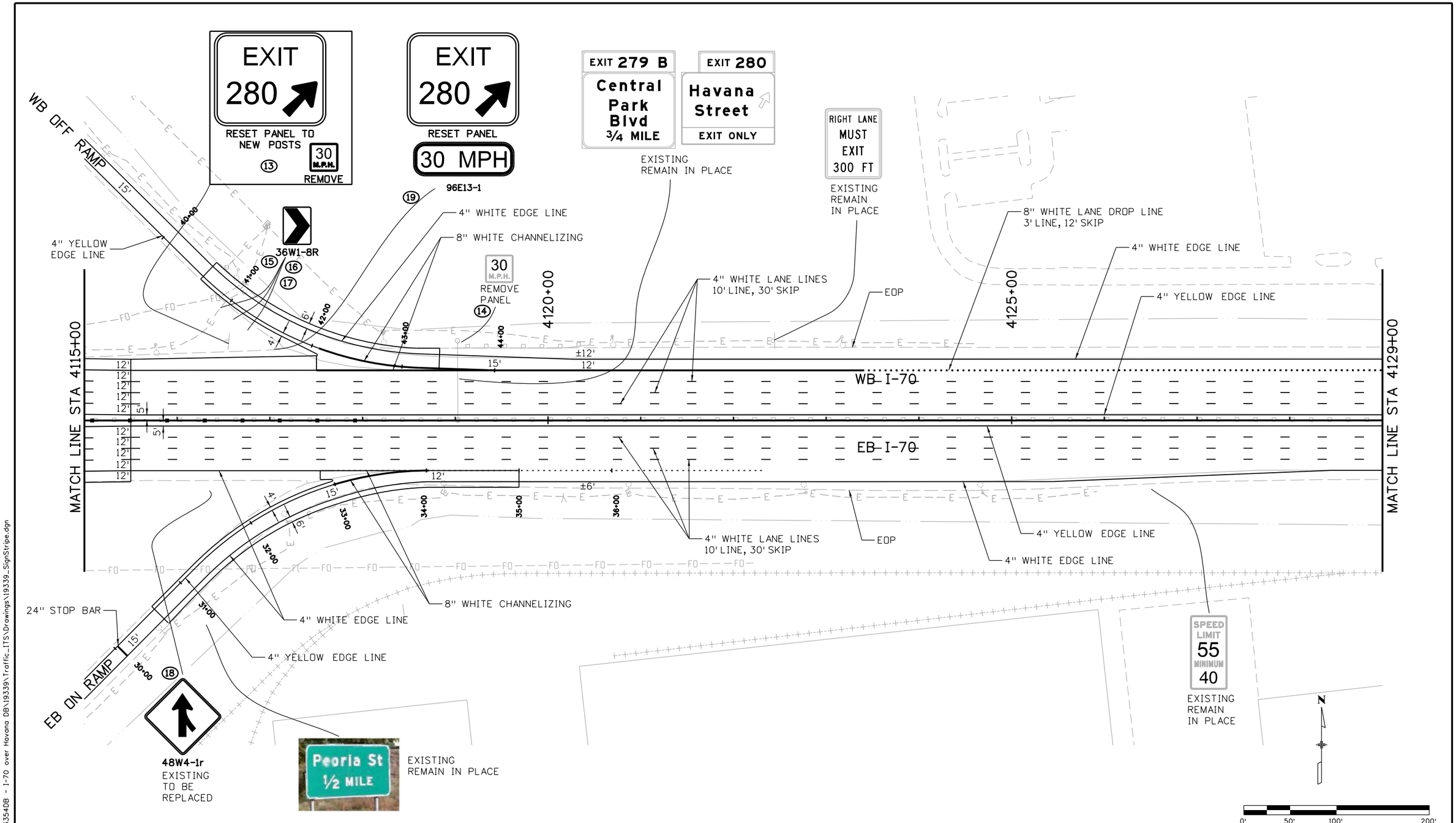

RFC02 JUNE, 2015 (REVIEW)

bob.harr 12:01:26 PM P:\303354DB - I-70 over Havana DB\19339\Traffic_ITS\Drawings\19339_SignStripe.dgn

Print Date: 6/17/2015	Sheet Revisions	Colorado Department of Transportation	As Constructed
File Name: 19339_SignStripe.dgn	Date: / Comments / Init.	CDOT 4670 N. Holly Denver, CO 80216 Phone: 303-398-6767 FAX: 303-398-6781	No Revisions:
Horiz. Scale: 1:100 Vert. Scale: As Noted		Region 1 KK	Revised:
LAWRENCE TSIOUVARAS SIMMONS HOLDERNESS CONSULTING ENGINEERS			Void:

I-70 OVER HAVANA STREET DESIGN-BUILD			Project No./Code
SIGNING AND STRIPING PLAN			FBR 0704-230
Designer: D. WOOLFALL	Structure Numbers		19339
Detailer: R. HARR			
Sheet Subset: TRAF	Subset Sheets: 4 of 10		Sheet Number 151

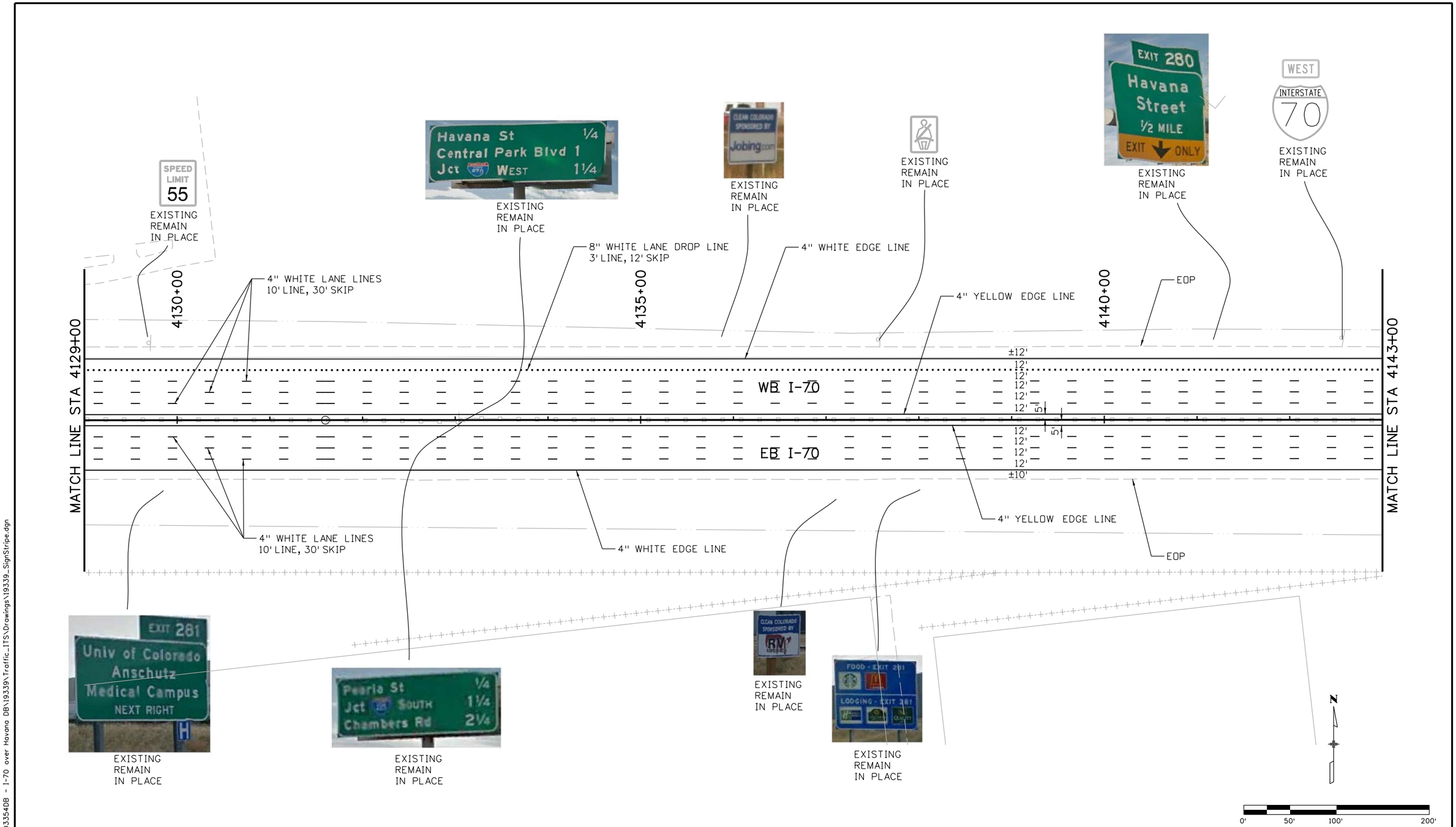

RFC02 JUNE, 2015 (REVIEW)

bob.harr 12:01:30 PM P:\13033540B - I-70 over Havana DB\19339\Traffic_ITS\Drawings\19339_SignStripe.dgn

Print Date: 6/17/2015	Sheet Revisions	Colorado Department of Transportation	As Constructed
File Name: 19339_SignStripe.dgn	Date: / Comments / Init.	4670 N. Holly, Denver, CO 80216, Phone: 303-398-6767 FAX: 303-398-6781	No Revisions:
Horiz. Scale: 1:100 Vert. Scale: As Noted		Region 1 KK	Revised:
LAWRENCE TSIOUVARAS SIMMONS HOLDERNESS CONSULTING ENGINEERS			Void:

I-70 OVER HAVANA STREET DESIGN-BUILD			Project No./Code
SIGNING AND STRIPING PLAN			FBR 0704-230
Designer: D. WOOLFALL	Structure Numbers		19339
Detailer: R. HARR			
Sheet Subset: TRAF	Subset Sheets: 5 of 10		Sheet Number 152

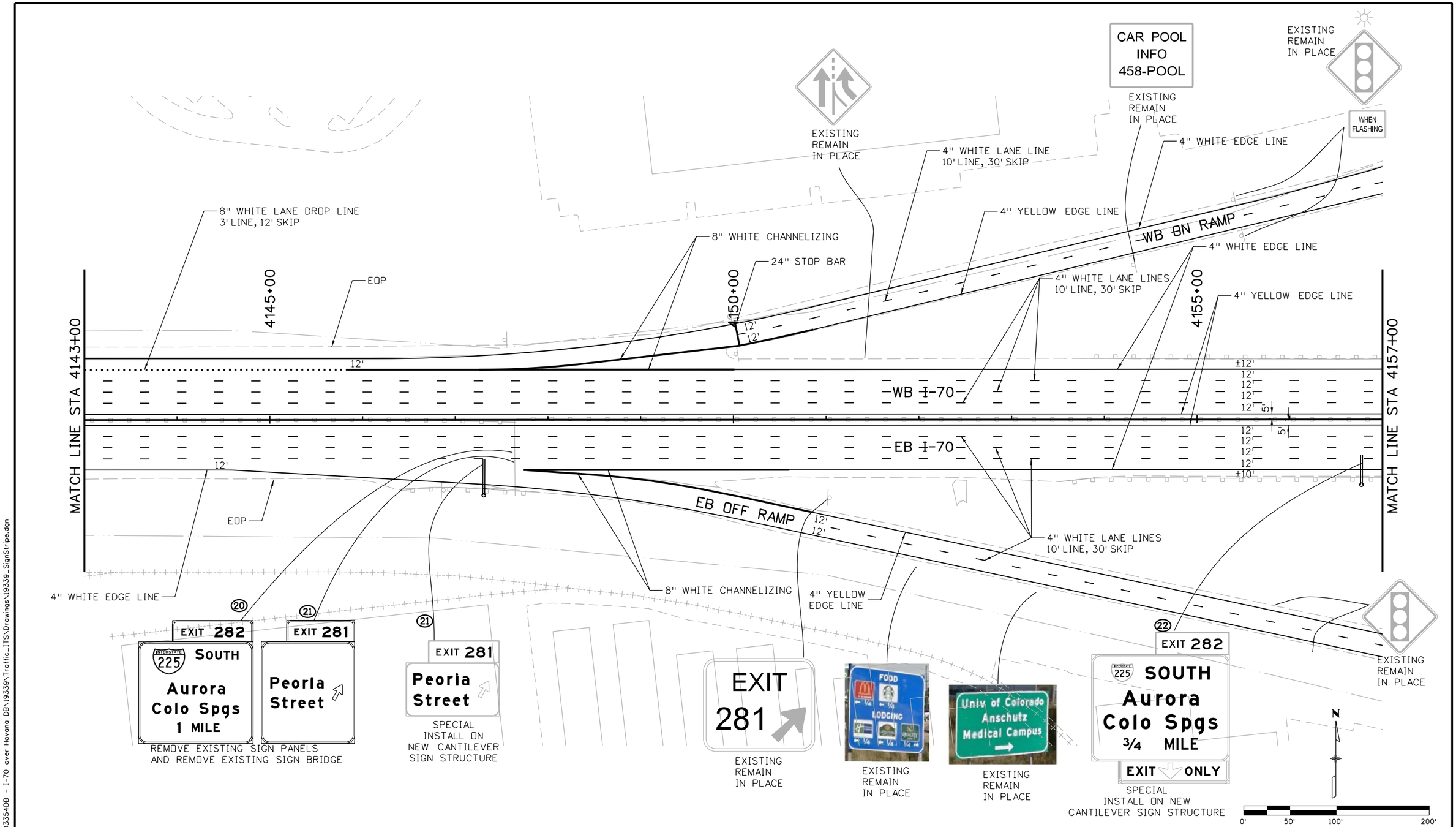

RFC02 JUNE, 2015 (REVIEW)

bob.harr 12:01:34 PM P:\13033540B - I-70 over Havana DB\19339\Traffic_ITS\Drawings\19339_SignStripe.dgn

Print Date: 6/17/2015	Sheet Revisions	Colorado Department of Transportation	As Constructed
File Name: 19339_SignStripe.dgn	Date: / Comments / Init.	4670 N. Holly, Denver, CO 80216, Phone: 303-398-6767 FAX: 303-398-6781	No Revisions:
Horiz. Scale: 1:100 Vert. Scale: As Noted		Region 1 KK	Revised:
LAWRENCE TSIOUVARAS SIMMONS HOLDERNESS CONSULTING ENGINEERS			Void:

I-70 OVER HAVANA STREET DESIGN-BUILD			
SIGNING AND STRIPING PLAN			
Designer: D. WOOLFALL	Structure Numbers		
Detailer: R. HARR			
Sheet Subset: TRAF	Subset Sheets: 6 of 10		

Project No./Code
FBR 0704-230
19339
Sheet Number 153

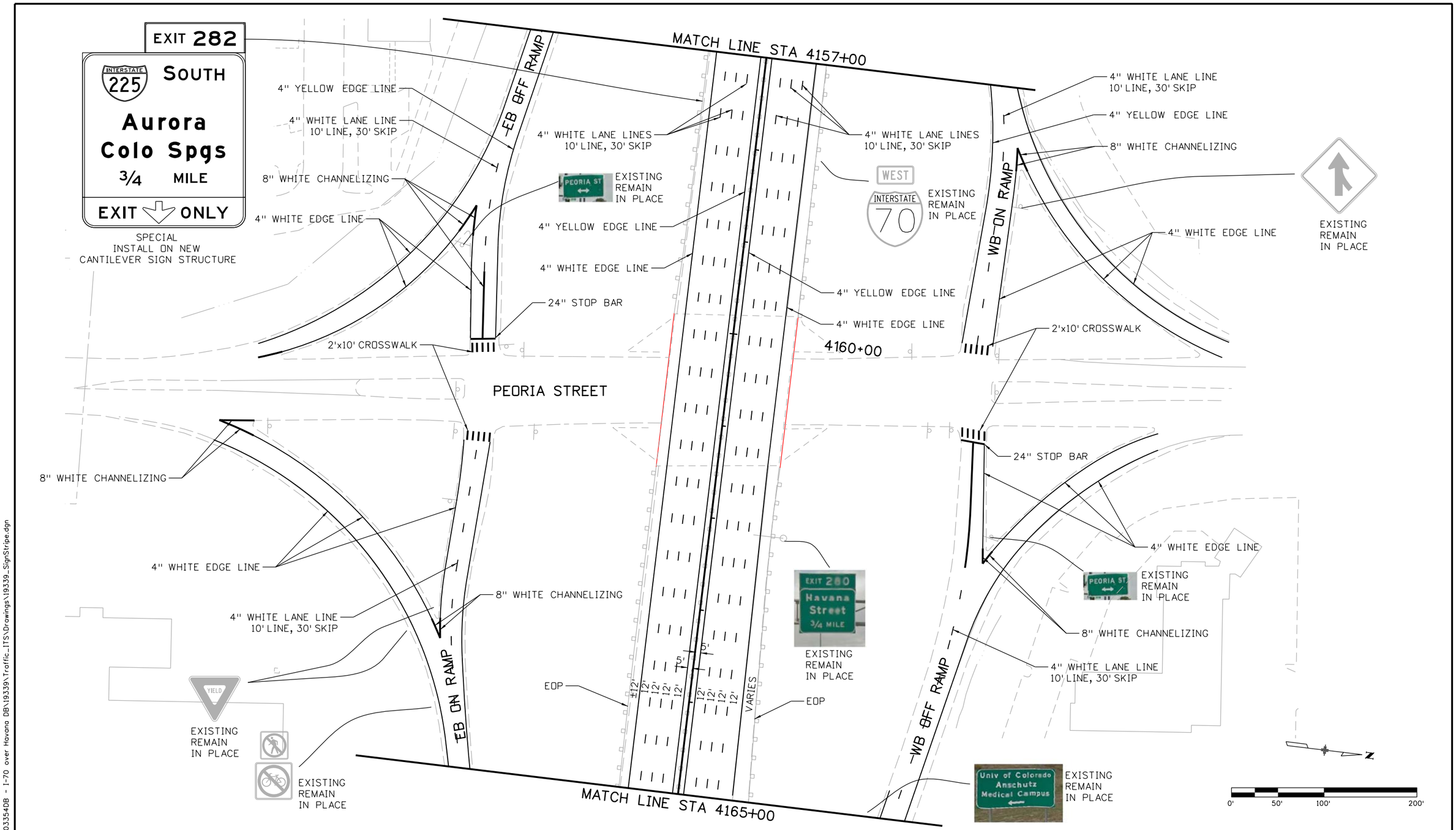

RFC02 JUNE, 2015 (REVIEW)

bob.harr 12:01:38 PM P:\1303354DB - I-70 over Havana DB\19339\Traffic_ITS\Drawings\19339_SignStripe.dgn

Print Date: 6/17/2015	Sheet Revisions	Colorado Department of Transportation	As Constructed
File Name: 19339_SignStripe.dgn	Date: / Comments / Init.	4670 N. Holly, Denver, CO 80216, Phone: 303-398-6767 FAX: 303-398-6781	No Revisions:
Horiz. Scale: 1:100 Vert. Scale: As Noted		Region 1 KK	Revised:
LAWRENCE TSIOUVARAS SIMMONS HOLDERNESS CONSULTING ENGINEERS			Void:

I-70 OVER HAVANA STREET DESIGN-BUILD		Project No./Code
SIGNING AND STRIPING PLAN		FBR 0704-230
Designer: D. WOOLFALL	Structure Numbers	19339
Detailer: R. HARR		
Sheet Subset: TRAF	Subset Sheets: 7 of 10	Sheet Number 154

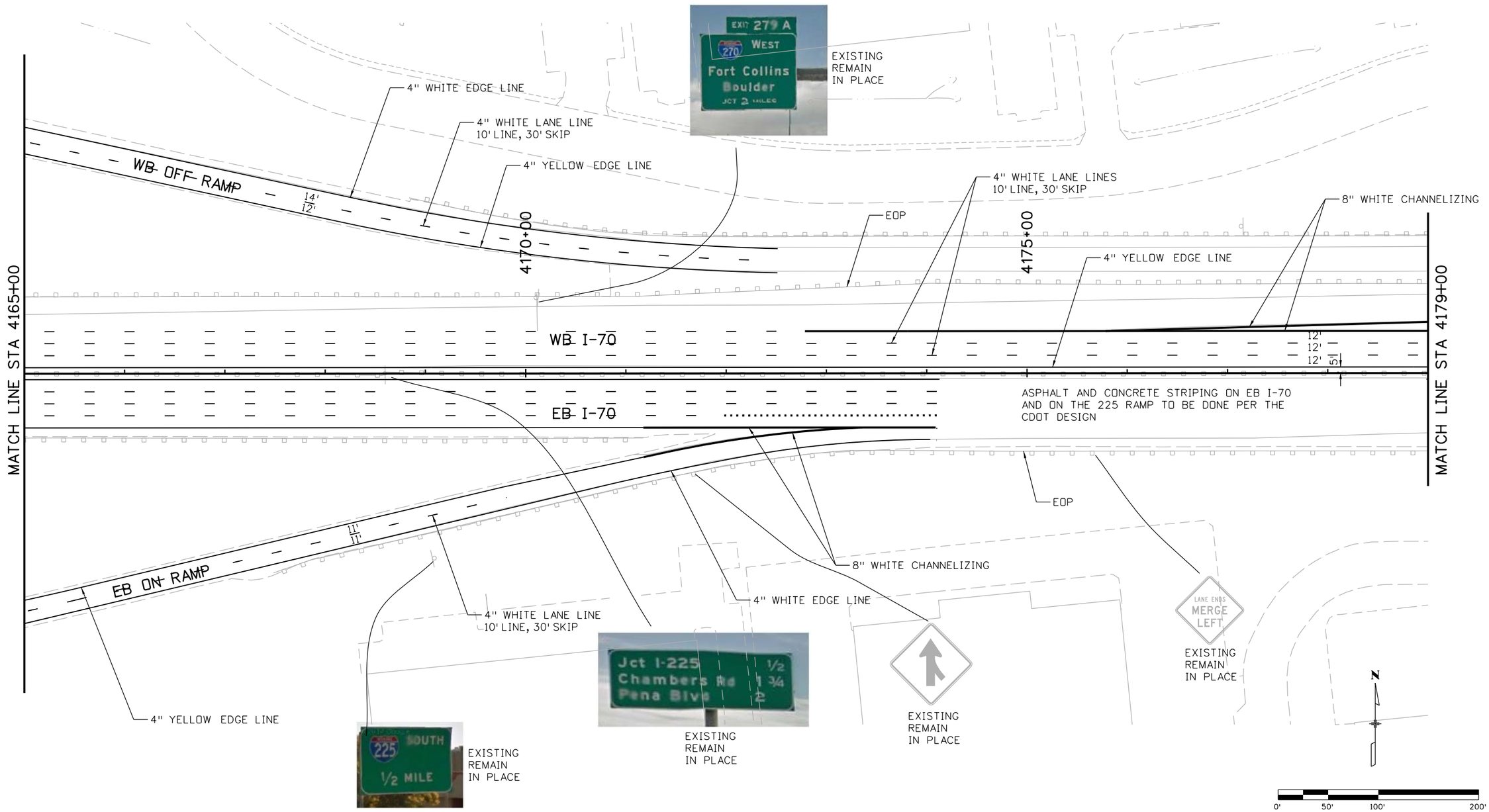

RFC02 JUNE, 2015 (REVIEW)

bob.harr 12:01:42 PM P:\1303354DB - I-70 over Havana DB\19339\Traffic_ITS\Drawings\19339_SignStripe.dgn

Print Date: 6/17/2015	Sheet Revisions	Colorado Department of Transportation	As Constructed
File Name: 19339_SignStripe.dgn	Date: / Comments / Init.	4670 N. Holly, Denver, CO 80216, Phone: 303-398-6767 FAX: 303-398-6781	No Revisions:
Horiz. Scale: 1:100 Vert. Scale: As Noted		Region 1 KK	Revised:
LAWRENCE TSIOUVARAS SIMMONS HOLDERNESS CONSULTING ENGINEERS			Void:

I-70 OVER HAVANA STREET DESIGN-BUILD

SIGNING AND STRIPING PLAN

Designer:	D. WOOLFALL	Structure Numbers	
Detailer:	R. HARR		
Sheet Subset:	TRAF	Subset Sheets:	8 of 10

Project No./Code
FBR 0704-230
19339
Sheet Number 155

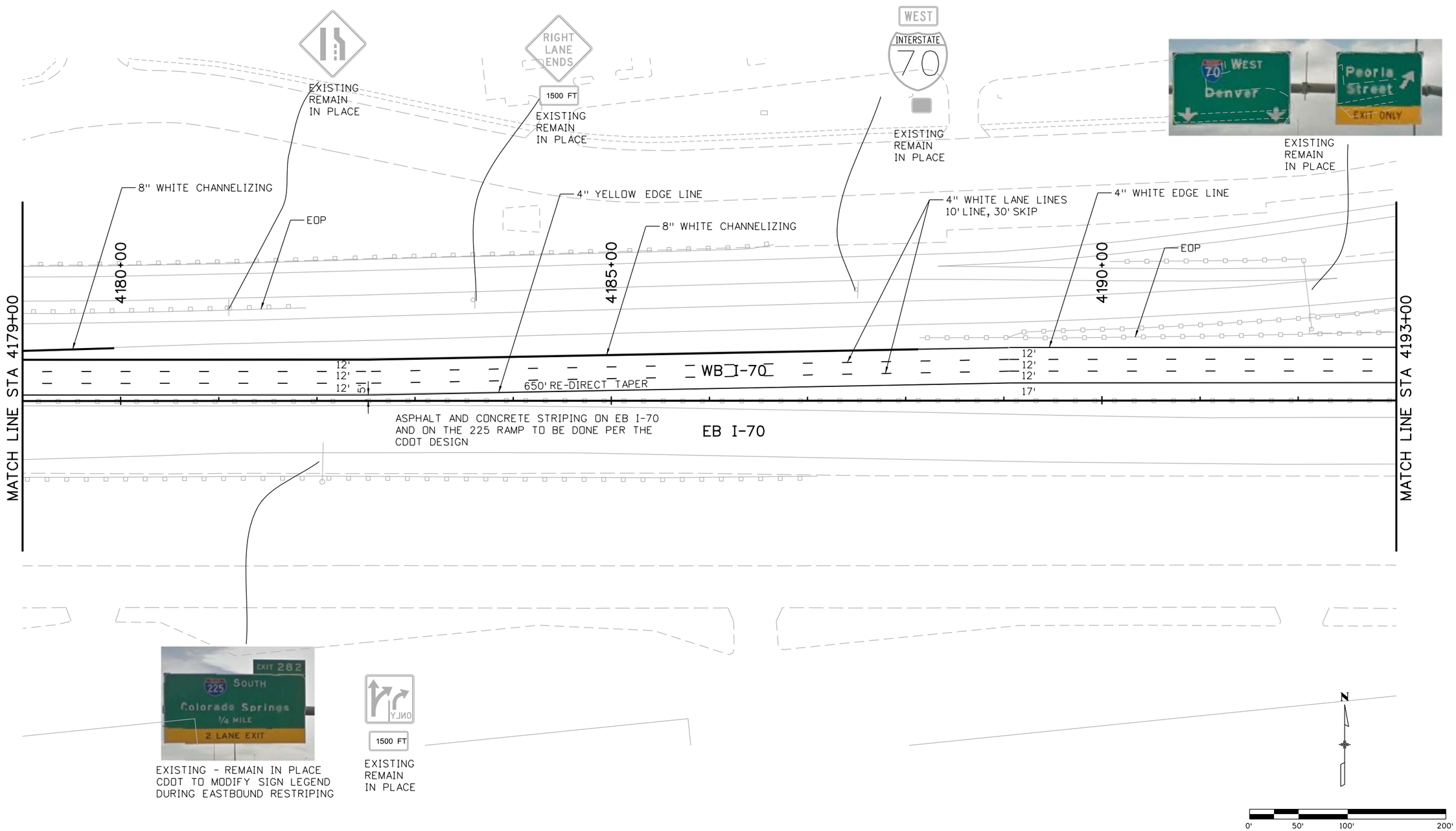

RFC02 JUNE, 2015 (REVIEW)

bob.harr 12:01:45 PM P:\13033540B - I-70 over Havana DB\19339\Traffic_ITS\Drawings\19339_SignStripe.dgn

Print Date: 6/17/2015
File Name: 19339_SignStripe.dgn
Horiz. Scale: 1:100 Vert. Scale: As Noted

LAWRENCE
TSIOUVARAS SIMMONS HOLDERNESS
CONSULTING ENGINEERS

Sheet Revisions		
Date:	Comments	Init.

Colorado Department of Transportation
CDOT
4670 N. Holly
Denver, CO 80216
Phone: 303-398-6767 FAX: 303-398-6781
Region 1 KK

As Constructed
No Revisions:
Revised:
Void:

I-70 OVER HAVANA STREET DESIGN-BUILD
SIGNING AND STRIPING PLAN

Designer: D. WOOLFALL
Detailer: R. HARR
Sheet Subset: TRAF
Structure Numbers
Subset Sheets: 9 of 10

Project No./Code
FBR 0704-230
19339
Sheet Number 156

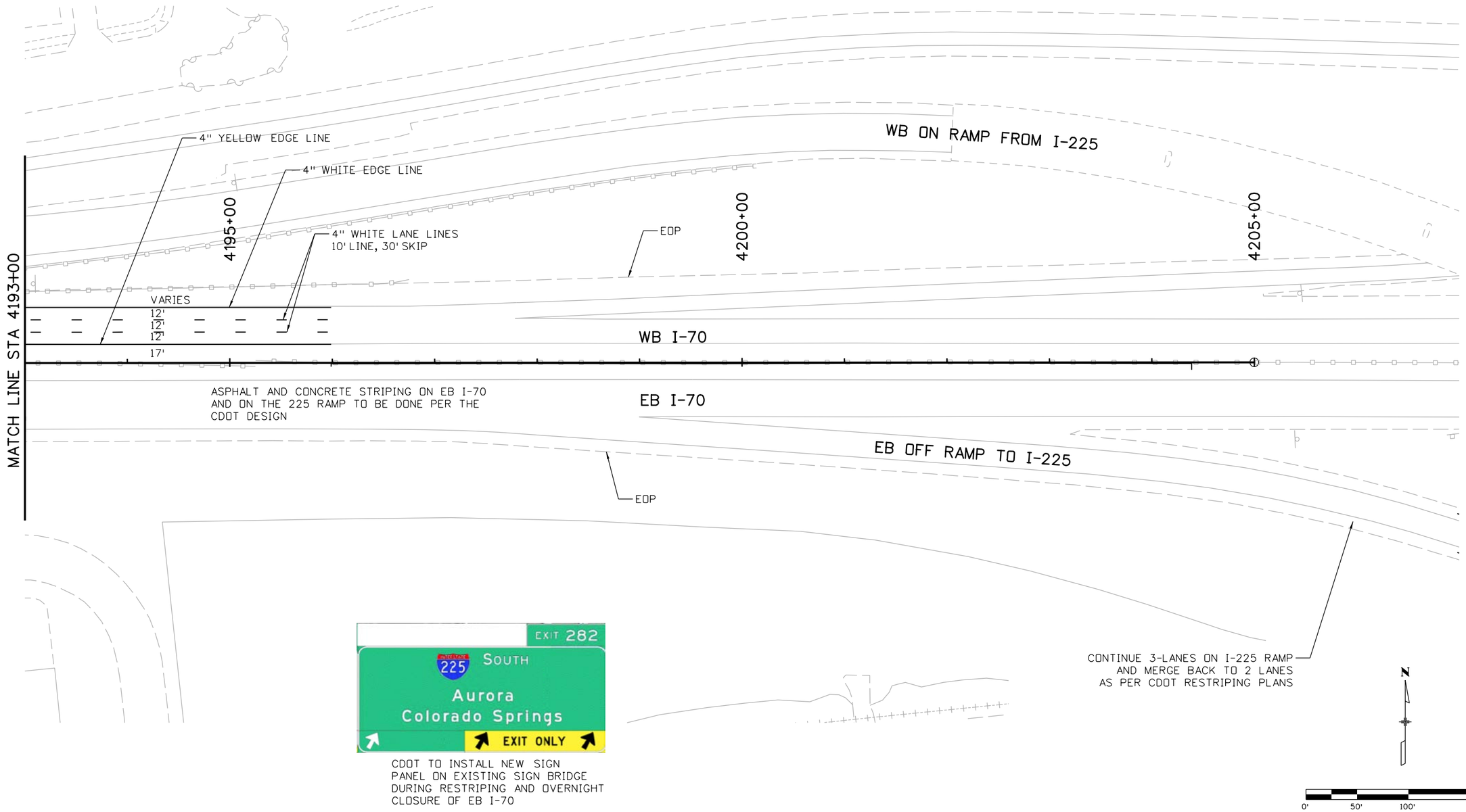

RFC02 JUNE, 2015 (REVIEW)

bob.harr 12:01:49 PM P:\13033540B - I-70 over Havana DB\19339\Traffic_ITS\Drawings\19339_SignStripe.dgn

Print Date: 6/17/2015	Sheet Revisions	Colorado Department of Transportation	As Constructed
File Name: 19339_SignStripe.dgn	Date: / Comments / Init.	4670 N. Holly, Denver, CO 80216, Phone: 303-398-6767 FAX: 303-398-6781	No Revisions:
Horiz. Scale: 1:100 Vert. Scale: As Noted		Region 1 KK	Revised:
TSIOUVARAS SIMMONS HOLDERNESS CONSULTING ENGINEERS			Void:

I-70 OVER HAVANA STREET DESIGN-BUILD	Project No./Code		
SIGNING AND STRIPING PLAN	FBR 0704-230		
Designer: D. WOOLFALL	Structure Numbers	19339	
Detailer: R. HARR			
Sheet Subset: TRAF	Subset Sheets: 10 of 10	Sheet Number 157	

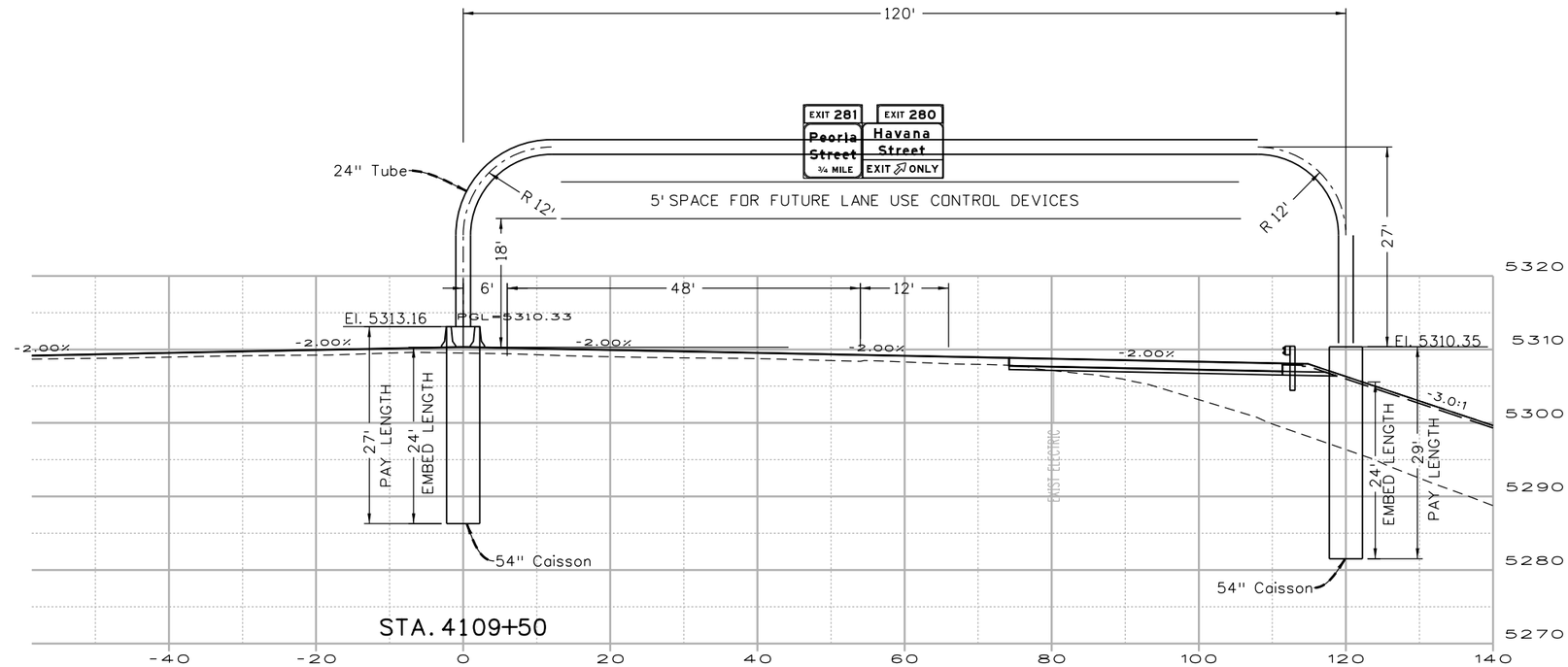

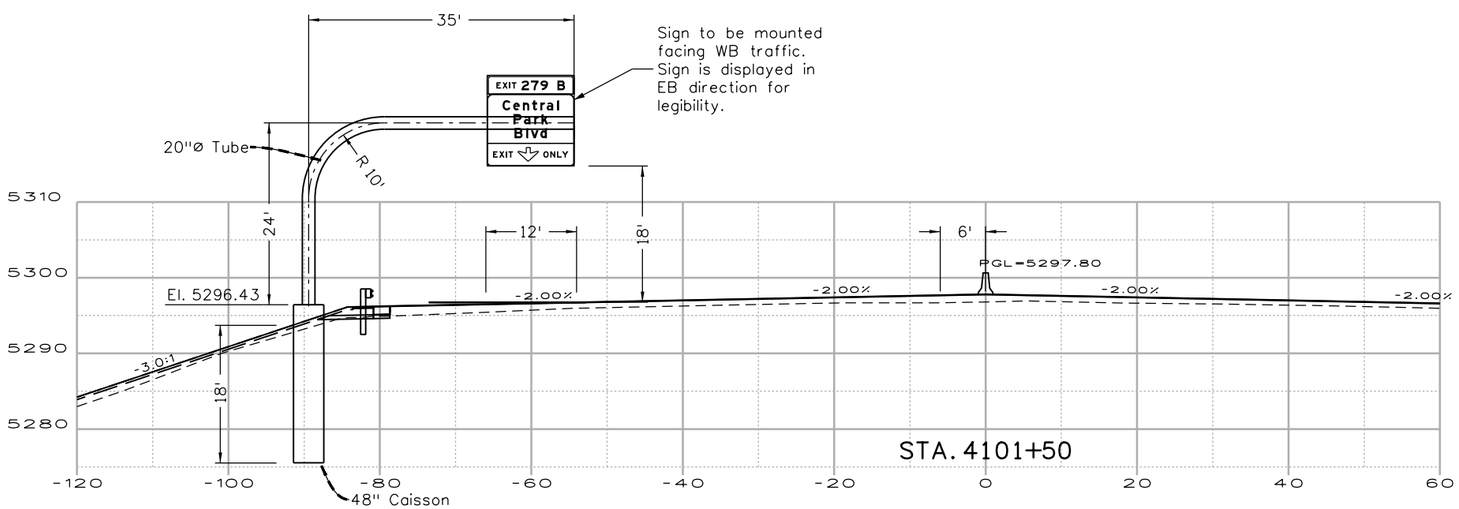

RFC02 JUNE, 2015 (REVIEW)

EXIST FIBER OPTICS

bob.harr 12:01:54 PM P:\1303354DB - I-70 over Havana DB\19339\Traffic_ITS\Drawings\19339_SignDet.dgn

Print Date: 6/17/2015	Sheet Revisions	Colorado Department of Transportation	As Constructed	I-70 OVER HAVANA STREET DESIGN-BUILD	Project No./Code
File Name: 19339_SignDet.dgn	Date: / Comments / Init.	4670 N. Holly, Denver, CO 80216, Phone: 303-398-6767 FAX: 303-398-6781	No Revisions:	SIGN DETAILS	FBR 0704-230
Horiz. Scale: 1:20 Vert. Scale: As Noted		Region 1 KK	Revised:	Designer: D. WOOLFALL / Structure Numbers	19339
LAWRENCE TSIOUVARAS SIMMONS HOLDERNESS CONSULTING ENGINEERS			Void:	Detailer: D. LOGSDON / Sheet Subset: TRAF / Subset Sheets: 1 of 4	Sheet Number 158

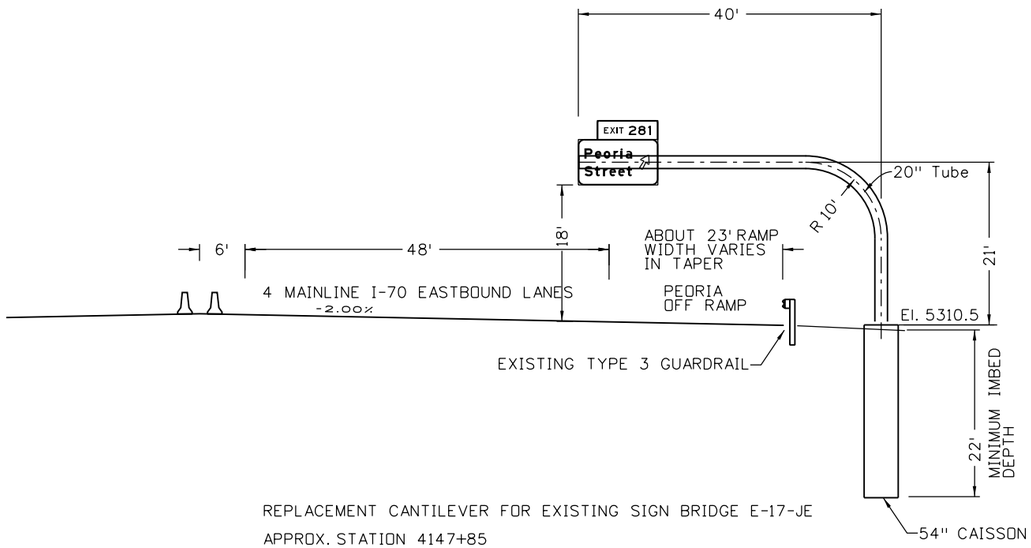

REPLACEMENT CANTILEVER FOR EXISTING SIGN BRIDGE E-17-JE
APPROX. STATION 4147+85
ESTIMATED CROSS SECTION FROM PLAN VIEW

3.0" Radius, 1.0" Border, White on Green;
[EXIT] E [ ] E Mod [281] E;
9.0" Radius, 1.0" Border, White on Green;
[Peoria] E Mod; [Street] E Mod; Arrow AR-A1 - 24.3" 60°;

RFC02 JUNE, 2015 (REVIEW)

bob.harr 12:01:58 PM P:\130335408 - I-70 over Havana DB\19339\Traffic_ITS\Drawings\19339_SignDet.dgn

Print Date: 6/17/2015	Sheet Revisions			Colorado Department of Transportation	As Constructed
File Name: 19339_SignDet.dgn	Date:	Comments	Init.	4670 N. Holly, Denver, CO 80216, Phone: 303-398-6767 FAX: 303-398-6781	No Revisions:
Horiz. Scale: 1:20 Vert. Scale: As Noted				Region 1 KK	Revised:
LAWRENCE TSIOUVARAS SIMMONS HOLDERNESS CONSULTING ENGINEERS					Void:

I-70 OVER HAVANA STREET DESIGN-BUILD			Project No./Code
SIGN DETAILS			FBR 0704-230
Designer: D. WOOLFALL	Structure Numbers		19339
Detailer: D. LOGSDON			
Sheet Subset: TRAF	Subset Sheets: 2 of 4		Sheet Number 159

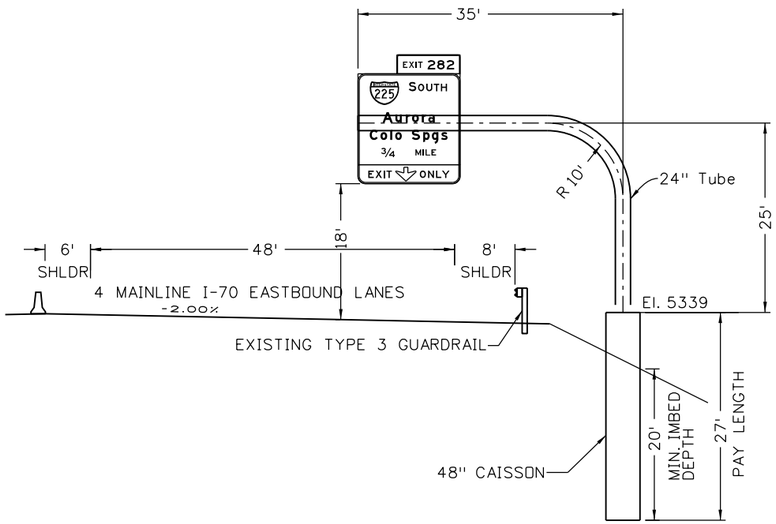

NEW CANTILEVER STRUCTURE AT
APPROX. STATION 4156+80
ESTIMATED CROSS SECTION FROM PLAN VIEW

3.0" Radius, 1.0" Border, White on Green;
[EXIT 282] E;
12.0" Radius, 2.0" Border, White on Green;
[SOUTH] E; [Aurora] E Mod; [Colo Spgs] E Mod; [ ] E Mod [3/4 MILE] E [ ] E Mod;
12.0" Radius, 2.0" Border, White on Yellow;
[EXIT] Black D; Down Arrow AR-C1 - 22.0" 270° Black; [ONLY] Black D;

RFC02 JUNE, 2015 (REVIEW)

bob.harr 12:02:01 PM P:\13033540B - I-70 over Havana DB\19339\Traffic_ITS\Drawings\19339_SignDet.dgn

Print Date: 6/17/2015	Sheet Revisions			Colorado Department of Transportation	As Constructed	I-70 OVER HAVANA STREET DESIGN-BUILD	Project No./Code
File Name: 19339_SignDet.dgn	Date:	Comments	Init.	4670 N. Holly, Denver, CO 80216, Phone: 303-398-6767 FAX: 303-398-6781	No Revisions:	SIGN DETAILS	FBR 0704-230
Horiz. Scale: 1:20 Vert. Scale: As Noted					Revised:	Designer: D. WOOLFALL / Structure Numbers	19339
TSIOUVARAS SIMMONS HOLDERNESS CONSULTING ENGINEERS				Region 1 KK	Void:	Detailer: D. LOGSDON / Sheet Subset: TRAF / Subset Sheets: 3 of 4	Sheet Number 160

3.0" Radius, 1.0" Border, White on Green;
[EXIT 281] E;
12.0" Radius, 2.0" Border, White on Green;
[Peoria] E Mod; [Street] E Mod; [ ] E Mod [3/4 MILE] E;

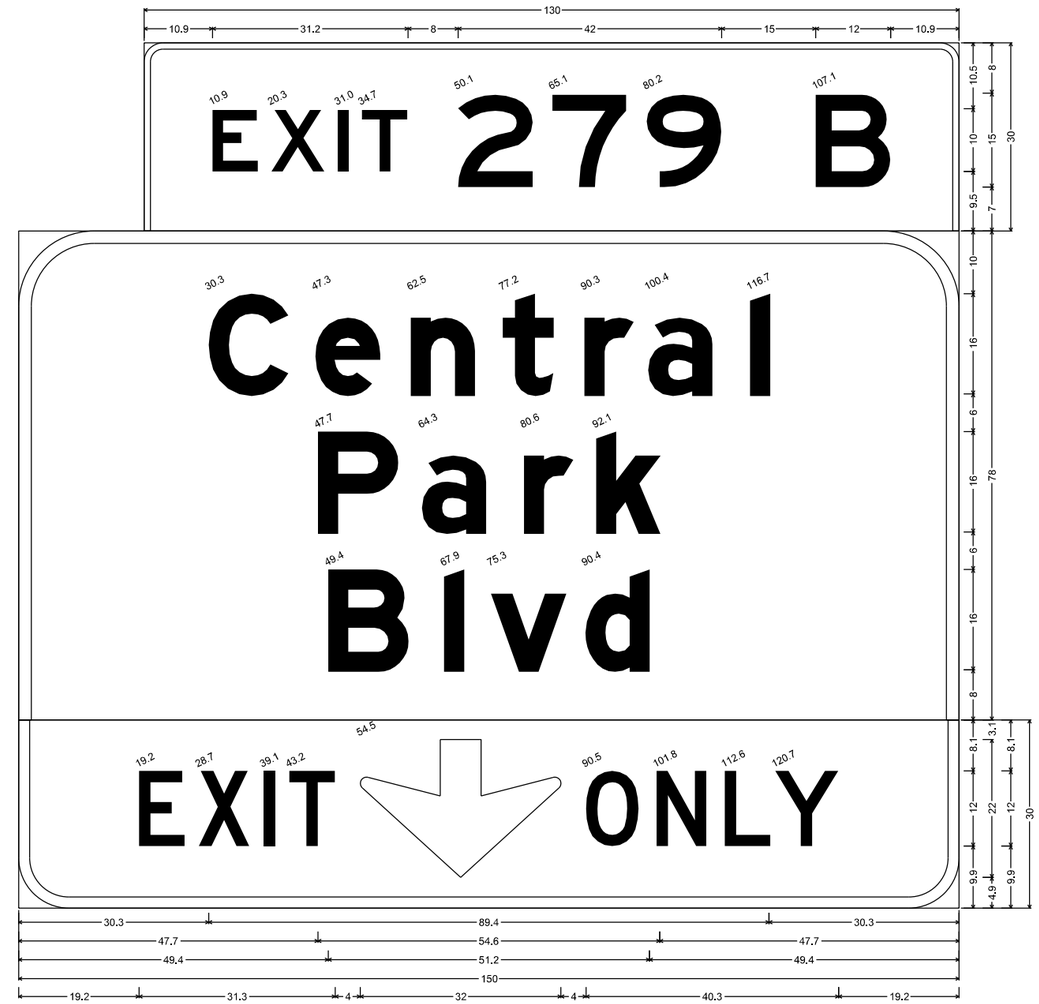

3.0" Radius, 1.0" Border, White on Green;
[EXIT 279 B] E;
12.0" Radius, 2.0" Border, White on Green;
[Central] E Mod; [Park] E Mod; [Blvd] E Mod;
8.0" Radius, 1.8" Border, White on Yellow;
[EXIT] Black D; Down Arrow AR-C1 - 22.0" 270° Black; [ONLY] Black D;

RFC02 JUNE, 2015 (REVIEW)

bob.harr 12:02:05 PM P:\13033540B - I-70 over Havana DB\19339\Traffic_ITS\Drawings\19339_SignDet.dgn

Print Date: 6/17/2015	Sheet Revisions	Colorado Department of Transportation	As Constructed
File Name: 19339_SignDet.dgn	Date: / Comments / Init.	4670 N. Holly, Denver, CO 80216, Phone: 303-398-6767 FAX: 303-398-6781	No Revisions:
Horiz. Scale: 1:20 Vert. Scale: As Noted		Region 1 KK	Revised:
LAWRENCE TSIOUVARAS SIMMONS HOLDERNESS CONSULTING ENGINEERS			Void:

I-70 OVER HAVANA STREET DESIGN-BUILD			Project No./Code
SIGN DETAILS			FBR 0704-230
Designer: D. WOOLFALL	Structure Numbers		19339
Detailer: D. LOGSDON			
Sheet Subset: TRAF	Subset Sheets: 4 of 4		Sheet Number 161

GENERAL NOTES

1. A PULL TAPE AND SEPARATE LOCATING WIRE (ONE #12 AWG INSULATED) SHALL BE PLACED IN EACH CONDUIT.
2. ALL CONDUIT SHALL BE SCHEDULE 80 HDPE OR PVC, UNLESS OTHERWISE NOTED, AND BE INSTALLED AT A MINIMUM DEPTH OF 48 INCHES.
3. ALL CONDUIT SHALL BE PLUGGED AT TERMINATION POINTS SUCH AS STUB OUTS, PULL BOXES, MANHOLES, CONTROLLER CABINETS, AND NODE BUILDINGS ON THE DAY OF INSTALLATION. THE CONTRACTOR SHALL CLEAN ALL DEBRIS AND WATER OUT OF CONDUIT.
4. SALVAGE ALL ELECTRONIC EQUIPMENT TO APPROPRIATE AGENCY: CDOT REGION 1, CDOT ITS, OR DENVER.
5. CONTRACTOR SHALL NOT EXCEED 48 HOURS OF DOWN-TIME FOR RELOCATED ITS DEVICES. ALL POWER, COMMUNICATION AND INFRASTRUCTURE SHALL BE IN PLACE AT THE PROPOSED LOCATION OF THE RELOCATED DEVICE BEFORE THE EXISTING DEVICE IS REMOVED.
6. ALL ITEM LOCATIONS ARE APPROXIMATE AND ARE TO BE FIELD LOCATED BASED UPON PREVAILING CONDITIONS.
7. TWISTED PAIR COPPER COMMUNICATIONS CABLES SHALL NOT BE LOCATED IN THE SAME CONDUIT AS 120V OR HIGHER ELECTRICAL WIRING.
8. CONDUIT ROUTING SHOWN ON THE PLANS IS DIAGRAMMATIC IN INTENT. CONTRACTOR SHALL MODIFY ROUTING AS NECESSARY TO AVOID EXISTING AND PROPOSED OBSTRUCTIONS.
9. ALL STRUCTURE AND POLE PENETRATIONS SHALL BE WATER TIGHT.
10. THE CONTRACTOR SHALL REMOVE ALL TRACER WIRE FROM CONDUIT TO BE ABANDONED IN PLACE. THE CONTRACTOR SHALL ALSO CUT, CAP OR REMOVE ABANDONDED CONDUIT ENTERING EXISTING PULL BOXES THAT WILL REMAIN IN PLACE.
11. USE THE LATEST COLORADO DEPARTMENT OF TRANSPORTATION M&S STANDARD PLANS, CITY & COUNTY OF DENVER TRAFFIC ENGINEERING SERVICES TRAFFIC SIGNAL STANDARDS, THE CONTRACT DOCUMENTS, AND THE 2011 COLORADO DEPARTMENT OF TRANSPORTATION STANDARD SPECIFICATIONS FOR ROAD AND BRIDGE CONSTRUCTION.
12. ITS SYMBOLS ARE NOT TO SCALE AND HAVE BEEN ENLARGED FOR CLARITY.
13. ALL CDOT PULL BOXES SHALL BE CONSTRUCTED OF FIBERGLASS REINFORCED, POLYMER CONCRETE AND HAVE A DETATCHABLE COVER WITH A SKID-RESISTANT SURFACE AND HAVE THE WORDS "CDOT COMM" CAST INTO THE SURFACE. PAINTING OF WORDS SHALL NOT BE ALLOWED.
14. ALL DENVER TRAFFIC COMMUNICATION PULL BOXES SHALL HAVE THE WORDS "TRAFFIC COMM" PHYSICALLY IMPRESSED (NOT PAINTED) ON ITS TOP.

RFC02 JUNE, 2015 (REVIEW)

CONSTRUCTION NOTES

1. EXISTING MANHOLE TO BE RAISED
2. EXISTING CCTV CAMERA TO BE RELOCATED
3. 2 INCH ELECTRICAL CONDUIT (PLASTIC)
4. EXISTING DUCT BANK
5. RELOCATED CCTV CAMERA
6. LIGHT STANDARD STEEL (40 FOOT)
7. EXISTING CCTV CABINET TO BE RELOCATED
8. RELOCATED CCTV CABINET
9. CDOT PULL BOX (SPECIAL) - VALVE BOX
10. CDOT PULL BOX (24"X36"X24")
11. EXISTING RAMP METER CABINET
12. PROTECT IN PLACE
13. EXISTING MICROWAVE VEHICLE RADAR DETECTOR
14. MICROWAVE VEHICLE RADAR DETECTOR
15. LIGHT STANDARD STEEL (25 FOOT)
16. EXISTING PULL BOX
17. REPLACE EXISTING TRAFFIC SIGNAL LOOP DETECTION
18. LIGHT STANDARD FOUNDATION
19. RAMP METER LOOP DETECTION
20. 3M CANOGA LOOP AMPLIFIER CARD
21. REPLACE EXISTING LOOPS AND LEAD-IN WIRES
22. SPLICE POINT
23. DENVER PULL BOX (22"X34"X24")
24. EXISTING LOOP DETECTION PULL BOX
25. WAVETRONIX CABINET EQUIPMENT (SEE DETAIL 7)
26. EXISTING CONDUIT
27. 1 INCH LIQUIDTIGHT FLEXIBLE METAL CONDUIT
28. EXISTING PULL BOX TO BE RAISED

WIRING NOTES

1. EXISTING CDOT/DENVER FIBER OPTIC BACKBONE
2. FIBER OPTIC CABLE (SINGLE MODE) (12 STRANDS) (LATERAL)
3. MVRD CABLE
4. RE-PULL AND REUSE EXISTING FIBER OPTIC LATERAL

SYMBOLS

EXISTING	PROPOSED	
		MANHOLE
		PULL BOX (SIZE VARIES)
		PULL BOX (SPECIAL) - VALVE BOX
		CLOSED CIRCUIT TELEVISION CAMERA
		CABINET
		MICROWAVE VEHICLE RADAR DETECTOR
		CCTV POLE
		RAMP METER OR TRAFFIC SIGNAL LOOP

LEGEND

—ITS——ITS——ITS—	NEW ITS CONDUIT
·ITS——ITS——ITS——	EXISTING FIBER OPTIC LINE
— — — — — — —	EXISTING RAMP METER CONDUIT

ABBREVIATIONS

CDOT	COLORADO DEPARTMENT OF TRANSPORTATION
FO	FIBER OPTIC
I	INTERSTATE
ITS	INTELLIGENT TRANSPORTATION SYSTEMS
LF	LINEAR FEET
MIN	MINIMUM
MVRD	MICROWAVE VEHICLE RADAR DETECTOR
N/A	NOT APPLICABLE
NTS	NOT TO SCALE
PB	PULL BOX

RFC02 JUNE, 2015 (REVIEW)

malinda.reese 3:25:14 PM P:\Projects\P150201 - I-70 Over Havana St. Design Build\CADD\19339ITS_Construction Notes.dgn

Print Date: 6/25/2015
File Name: 19339ITS_Construction Notes.dgn
Horiz. Scale: NTS Vert. Scale: As Noted

apexdesign
1675 LARIMER ST, STE 480 PH: 303-339-0440
DENVER, CO 80202 FAX: 303-325-7743

Sheet Revisions		
Date:	Comments	Init.

Colorado Department of Transportation
4670 N. Holly
Denver, CO 80216
Phone: FAX: 303-398-6781
Region 1 KK

As Constructed
No Revisions:
Revised:
Void:

I-70 OVER HAVANA STREET DESIGN-BUILD
CONSTRUCTION & WIRING NOTES, SYMBOLS, LEGEND AND ABBREVIATIONS

Designer: M. REESE
Detailer: M. REESE
Sheet Subset: ITS
Structure Numbers
Subset Sheets: 2 of 5

FBR 0704-230
19339
Sheet Number 163

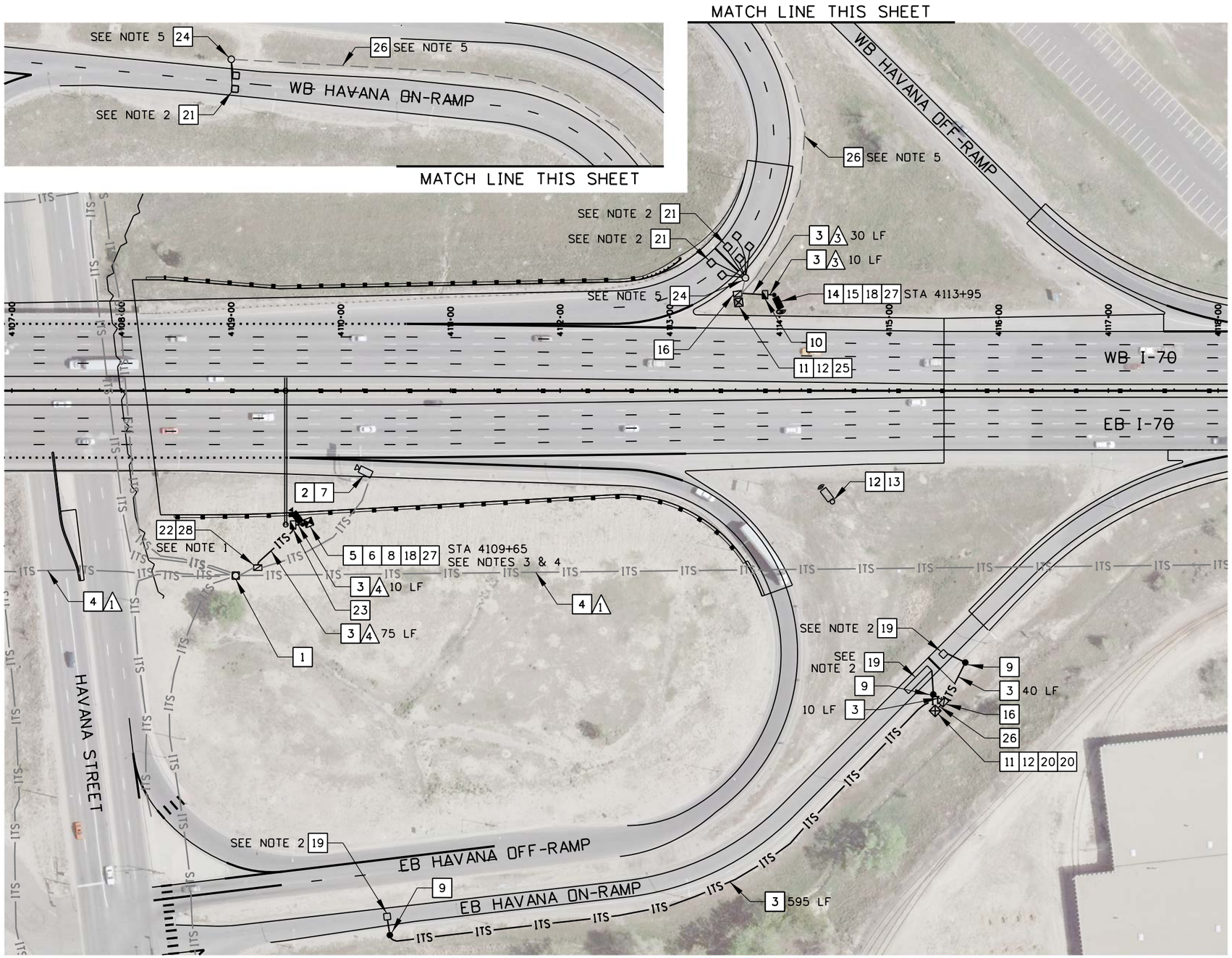

CONSTRUCTION NOTES

1. EXISTING MANHOLE TO BE RAISED
2. EXISTING CCTV CAMERA TO BE RELOCATED
3. 2 INCH ELECTRICAL CONDUIT (PLASTIC)
4. EXISTING DUCT BANK
5. RELOCATED CCTV CAMERA
6. LIGHT STANDARD STEEL (40 FOOT)
7. EXISTING CCTV CABINET TO BE RELOCATED
8. RELOCATED CCTV CABINET
9. CDOT PULL BOX (SPECIAL) - VALVE BOX
10. CDOT PULL BOX (24"X36"X24")
11. EXISTING RAMP METER CABINET
12. PROTECT IN PLACE
13. EXISTING MICROWAVE VEHICLE RADAR DETECTOR
14. MICROWAVE VEHICLE RADAR DETECTOR
15. LIGHT STANDARD STEEL (25 FOOT)
16. EXISTING PULL BOX
18. LIGHT STANDARD FOUNDATION
19. RAMP METER LOOP DETECTION
20. 3M CANOGA LOOP AMPLIFIER CARD
21. REPLACE EXISTING LOOPS AND LEAD-IN WIRES
22. SPLICE POINT
23. DENVER PULL BOX (22"X34"X24")
24. EXISTING LOOP DETECTION PULL BOX
25. WAVETRONIX CABINET EQUIPMENT (SEE DETAIL 7)
26. EXISTING CONDUIT
27. 1 INCH LIQUIDTIGHT FLEXIBLE METAL CONDUIT
28. EXISTING PULL BOX TO BE RAISED

WIRING NOTES

1. EXISTING CDOT/DENVER FIBER OPTIC BACKBONE
3. MVRD CABLE
4. RE-PULL AND REUSE EXISTING FIBER OPTIC LATERAL

Know what's below. Call before you dig.

NOTES:

1. ALL FIBER ALLOCATIONS, SPLICING DIAGRAMS, AND NETWORK DRAWINGS WILL BE PREPARED BY CDOT OR DENVER.
2. INSTALL RAMP METER LOOP DETECTION PER ITS DETAIL 8.
3. REFER TO ELECTRICAL PLANS FOR ELECTRICAL DESIGN.
4. REUSE EXISTING CCTV CABLE IF POSSIBLE GIVEN LENGTH OF CABLE; IF CABLE IS TOO SHORT, REPLACE WITH APPROPRIATE LENGTH CCTV CABLE.
5. EXISTING LOOP DETECTOR PULL BOXES AND CONDUIT LOCATIONS SHOWN ARE APPROXIMATE BASED ON BEST AVAILABLE INFORMATION.
6. CONTACT ZAYO FOR COORDINATION REGARDING ANY IMPACTS TO FIBER OPTIC BACKBONE.
7. CONTRACTOR SHALL REMOVE EXISTING SENSYS PUCK RAMP DETECTION FROM THE ROADWAY PRIOR TO MILL & OVERLAY OF EB AND WB ON-RAMPS.

N

0' 50' 100' 200'

RFC02 JUNE, 2015 (REVIEW)

molinda.reese 3:25:15 PM P:\Projects\P150201 - I-70 Over Havana St. Design Build\CADD\19339_ITSPlan01.dgn

Print Date: 6/25/2015	Sheet Revisions	Colorado Department of Transportation	As Constructed
File Name: 19339_ITSPlan01.dgn	Date: / Comments / Init.	4670 N. Holly, Denver, CO 80216	No Revisions:
Horiz. Scale: 1:100 Vert. Scale: As Noted		Phone: FAX: 303-398-6781	Revised:
apexdesign		Region 1 KK	Void:
1675 LARIMER ST, STE 480 PH: 303-339-0440			
DENVER, CO 80202 FAX: 303-325-7743			

I-70 OVER HAVANA STREET DESIGN-BUILD
HAVANA INTERCHANGE
ITS PLAN

Designer:	M. REESE	Structure Numbers	
Detailer:	M. REESE		
Sheet Subset:	ITS	Subset Sheets:	3 of 5

FBR 0704-230

19339

Sheet Number 164

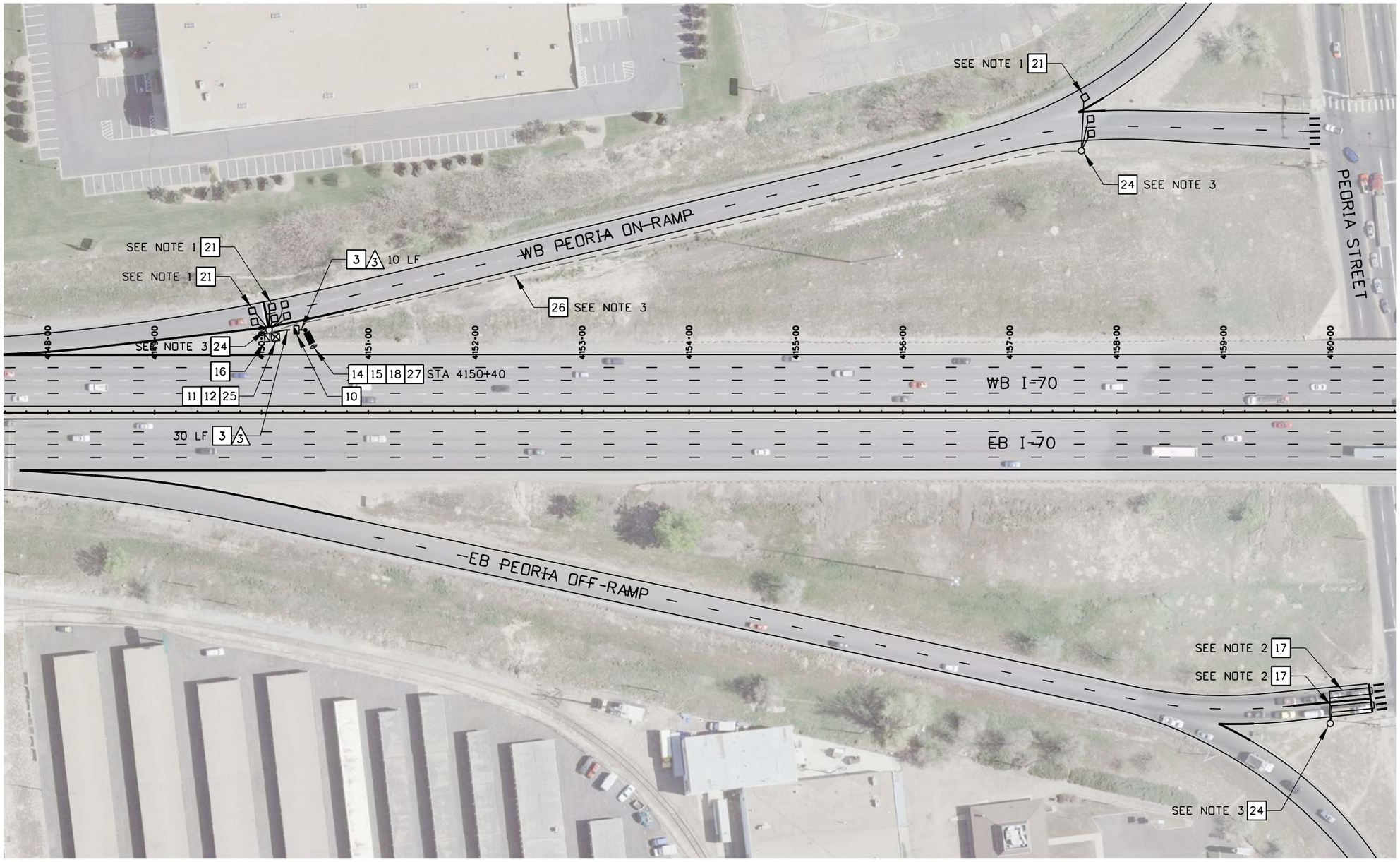

Know what's below. Call before you dig.

CONSTRUCTION NOTES

3	2 INCH ELECTRICAL CONDUIT (PLASTIC)
10	CDOT PULL BOX (24"X36"X24")
11	EXISTING RAMP METER CABINET
12	PROTECT IN PLACE
14	MICROWAVE VEHICLE RADAR DETECTOR
15	LIGHT STANDARD STEEL (25 FOOT)
16	EXISTING PULL BOX
17	REPLACE EXISTING TRAFFIC SIGNAL LOOP DETECTION
18	LIGHT STANDARD FOUNDATION
21	REPLACE EXISTING LOOPS & LEAD-IN WIRES
24	EXISTING LOOP DETECTION PULL BOX
25	WAVETRONIX CABINET EQUIPMENT (SEE DETAIL 7)
26	EXISTING CONDUIT
27	1 INCH LIQUIDTIGHT FLEXIBLE METAL CONDUIT

WIRING NOTES

3 MVRD CABLE

NOTES:

1. INSTALL RAMP METER LOOP DETECTION PER ITS DETAIL 8.
2. INSTALL TRAFFIC SIGNAL LOOP DETECTION PER STANDARD DETAIL S-614-43.
3. EXISTING LOOP DETECTOR PULL BOXES AND CONDUIT LOCATIONS SHOWN ARE APPROXIMATE BASED ON BEST AVAILABLE INFORMATION.

RFC02 JUNE, 2015 (REVIEW)

Print Date: 5/6/2015
File Name: 19339_ITSPlan02.dgn
Horiz. Scale: 1:100 Vert. Scale: As Noted

apexdesign
1675 LARIMER ST, STE 480 PH: 303-339-0440
DENVER, CO 80202 FAX: 303-325-7743

Sheet Revisions		
Date:	Comments	Init.

Colorado Department of Transportation
4670 N. Holly
Denver, CO 80216
Phone: FAX: 303-398-6781
Region 1 KK

As Constructed
No Revisions:
Revised:
Void:

I-70 OVER HAVANA STREET DESIGN-BUILD
PEORIA INTERCHANGE (1 OF 2)
ITS PLAN

Designer:	M. REESE	Structure Numbers	
Detailer:	M. REESE		
Sheet Subset:	ITS	Subset Sheets:	4 of 5

FBR 0704-230
19339
Sheet Number 165

malinda.reese 12:20:14 PM P:\Projects\P150201 - I-70 Over Havana St. Design Build\CADD\19339_ITSPlan02.dgn

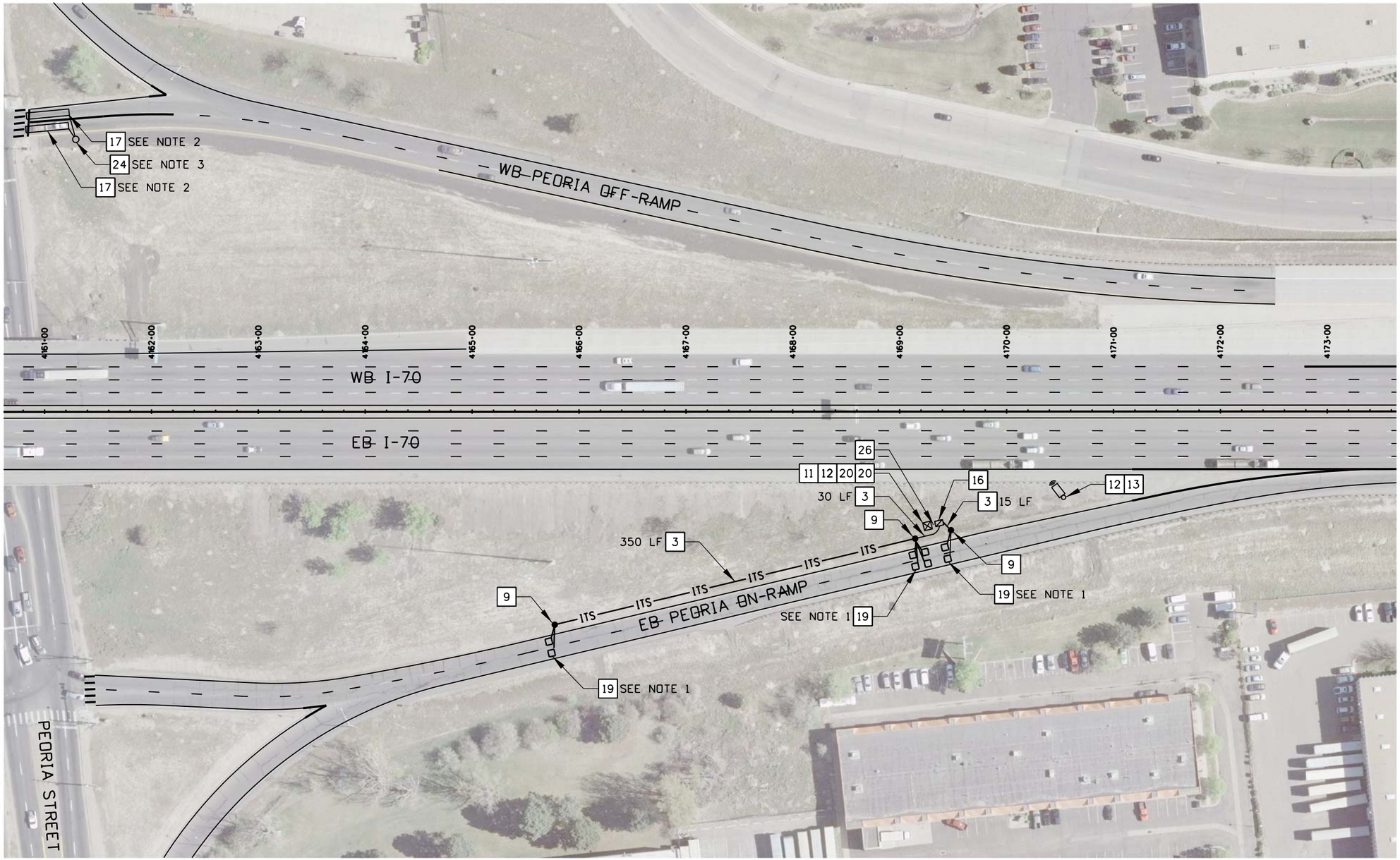

Know what's below. Call before you dig.

CONSTRUCTION NOTES

- 3 — 2 INCH ELECTRICAL CONDUIT (PLASTIC)
- 9 — CDOT PULL BOX (SPECIAL) - VALVE BOX
- 11 — EXISTING RAMP METER CABINET
- 12 — PROTECT IN PLACE
- 13 — EXISTING MICROWAVE VEHICLE RADAR DETECTION
- 16 — EXISTING PULL BOX
- 17 — REPLACE EXISTING TRAFFIC SIGNAL LOOP DETECTION
- 19 — RAMP METER LOOP DETECTION
- 20 — 3M CANOGA LOOP AMPLIFIER CARD
- 24 — EXISTING LOOP DETECTION PULL BOX
- 26 — EXISTING CONDUIT

NOTES:

1. INSTALL RAMP METER LOOP DETECTION PER ITS DETAIL 8.
2. INSTALL TRAFFIC SIGNAL LOOP DETECTION PER STANDARD DETAIL S-614-43.
3. EXISTING LOOP DETECTOR PULL BOXES AND CONDUIT LOCATIONS SHOWN ARE APPROXIMATE BASED ON BEST AVAILABLE INFORMATION.
4. CONTRACTOR SHALL REMOVE EXISTING SENSYS PUCK RAMP DETECTION FROM THE ROADWAY PRIOR TO MILL & OVERLAY OF EB ON-RAMP.

N

0' 50' 100' 200'

RFC02 JUNE, 2015 (REVIEW)

Print Date: 5/8/2015	Sheet Revisions	Colorado Department of Transportation	As Constructed
File Name: 19339_ITSPlan03.dgn	Date: / Comments / Init.	4670 N. Holly, Denver, CO 80216, Phone: FAX: 303-398-6781	No Revisions:
Horiz. Scale: 1:100 Vert. Scale: As Noted		Region 1 KK	Revised:
apexdesign			Void:
1675 LARIMER ST, STE 480 PH: 303-339-0440			
DENVER, CO 80202 FAX: 303-325-7743			

I-70 OVER HAVANA STREET DESIGN-BUILD PEORIA INTERCHANGE (2 OF 2) ITS PLAN			FBR 0704-230
Designer: M. REESE	Structure Numbers		19339
Detailer: M. REESE			
Sheet Subset: ITS	Subset Sheets: 5 of 5		Sheet Number 166

molinda.reese 11:57:08 AM P:\Projects\P150201 - I-70 Over Havana St. Design Build\CADD\19339_ITSPlan03.dgn

NOTES:

1. CONTRACTOR SHALL CONFORM TO THE APPLICABLE AGENCY REQUIREMENTS AND SPECIFICATION FOR BORE CROSSINGS.
2. EXCAVATIONS AND DISTURBANCE LIMITS REQUIRE SEEDING AND MULCHING.
3. CONTRACTOR SHALL BACKFILL AND REGRADE SITE TO MATCH EXISTING CONDITIONS.
4. CONTRACTOR MUST REPAIR ANY DAMAGE TO PAVEMENT CAUSED BY ERRANT BORING AT THEIR COST.
5. TRENCHES SHALL BE FILLED IN BY THE END OF THE WORK DAY. CONTRACTOR SHALL USE A BMP ON THE DOWNSTREAM SIDE OF ANY REMAINING SPOILS TO PREVENT THE TRANSPORT OF THE SEDIMENT DURING A RAIN EVENT.

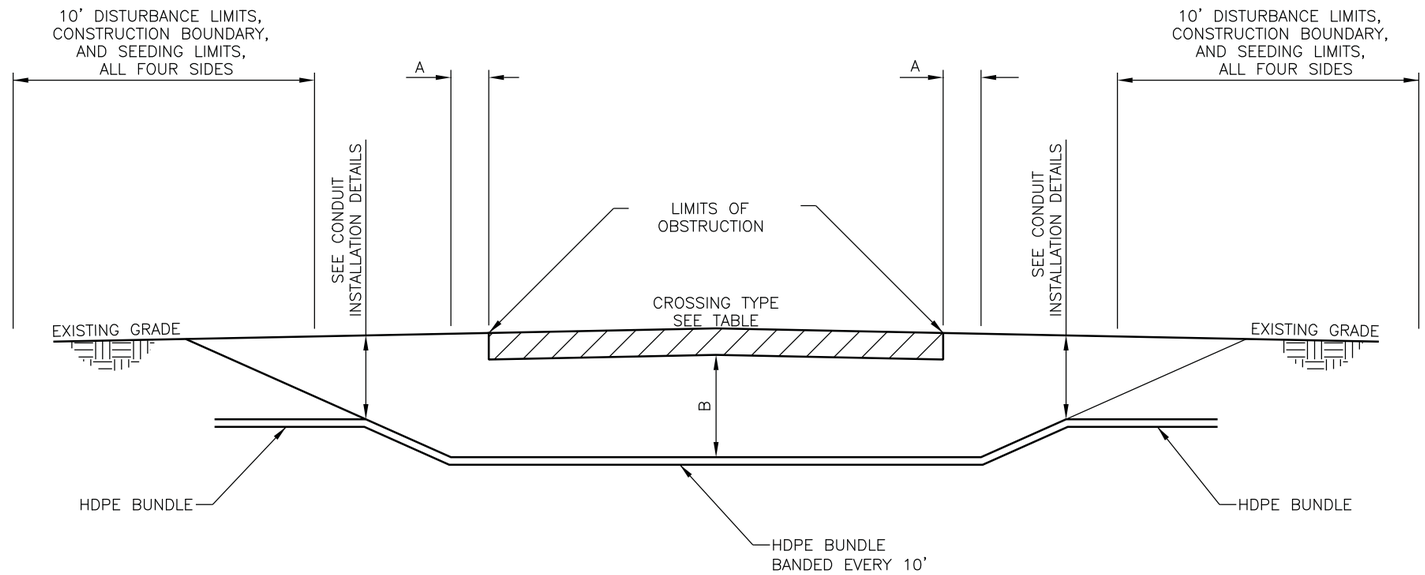

DIRECTIONAL BORE PROFILE

NTS

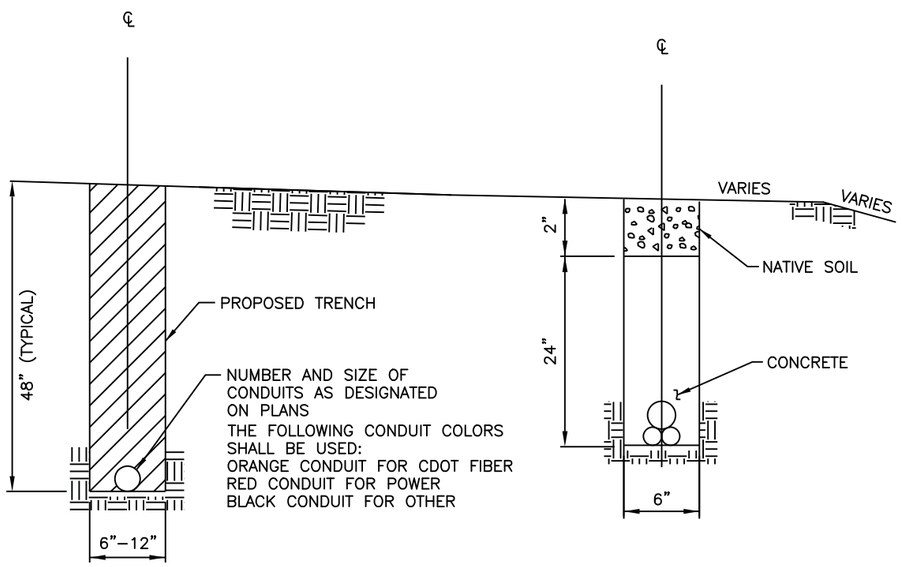

DETAIL A

DETAIL B

ONLY TO BE USED IF 48" DEPTH CANNOT BE ACHEIVED

TRENCHING IN FILL

NTS

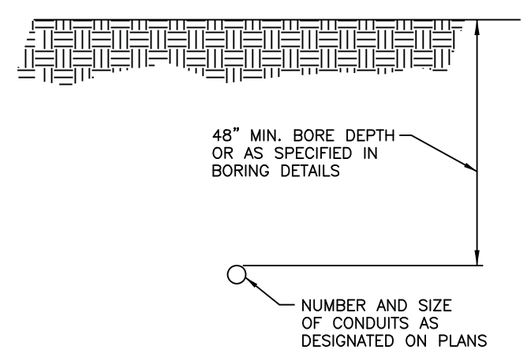

DIRECTIONAL BORE

NTS

CROSSING TYPE	A	B
CULVERT	5' MIN	48" MIN
DRIVEWAY	5' MIN	48" MIN
DITCH	15' MIN	48" MIN
CROSS ROAD	15' MIN	48" MIN
FREEWAY	15' MIN	48" MIN
PRAIRIE DOGS	15' MIN	84" MIN
TREE	20' MIN	84" MIN
WATERWAY	50' MIN	48" MIN
WETLAND	50' MIN	48" MIN

RFC02 JUNE, 2015 (REVIEW)

malinda.reese 12:20:35 PM P:\Projects\P150201 - I-70 Over Havana St. Design Build\CADD\Details\19339_DET01_Conduit Installation.dgn

Print Date: 5/6/2015
File Name: 19339_DET01_Conduit Installation.dgn
Horiz. Scale: NTS Vert. Scale: As Noted

apexdesign
1675 LARIMER ST, STE 480 PH: 303-339-0440
DENVER, CO 80202 FAX: 303-325-7743

Sheet Revisions		
Date:	Comments	Init.

Colorado Department of Transportation
4670 N. Holly
Denver, CO 80216
Phone: FAX: 303-398-6781
Region 1 KK

As Constructed
No Revisions:
Revised:
Void:

CONDUIT INSTALLATION DETAIL

Designer: CDOT
Detailer: CDOT
Sheet Subset: ITS DET
Structure Numbers
Subset Sheets: 1 of 9

FBR 0704-230
19339
Sheet Number 167

PULL BOX NOTES:

1. CONDUITS DEPICTED ON THIS SHEET ARE REPRESENTATIVE ONLY. EXACT NUMBER OF CONDUITS INSTALLED AND CONDUIT SIZE SHALL BE AS TABULATED AND SHOWN ON THE PLANS.
2. DESIGNATION FOR THE INSTALLATION OF ELECTRICAL WIRING AND FIBER OPTIC CABLE IN THE BACKBONE CONDUIT SYSTEM IS DESCRIBED IN THE PROJECT SPECIFICATIONS.
3. CONDUIT CENTERLINE SHALL BE ALIGNED WITHIN THE PULL BOX TO FACILITATE FIBER OPTIC CABLE PULLING.
4. CONDUIT PLUGS SHALL BE INSTALLED IN ALL CONDUITS ON THE SAME DAY THE CONDUIT IS INSTALLED, FOR BOTH CONDUITS WITH AND WITHOUT WIRE OR CABLE, AND SHALL BE INCLUDED IN THE COST OF ELECTRICAL CONDUIT ITEM.
5. WEATHERPROOF TAGS SHALL BE INSTALLED ON ALL FIBER CABLES AND SHALL BE INCLUDED IN THE COST OF ELECTRICAL CONDUIT ITEM.
6. PULL TAPE WITH EMBEDDED TRACER WIRE SHALL BE INCLUDED IN THE COST OF THE ELECTRICAL CONDUIT ITEM FOR BOTH THE MAIN BACKBONE AND LATERAL CONDUIT RUNS.
   - PULL TAPE WITH EMBEDDED TRACER WIRE SHALL BE INSTALLED IN ALL CONDUITS.
   - IF INSTALLATION INCLUDES MULTIPLE RUNS OF CONDUIT IN A JOINT TRENCH, PULL TAPE WITH EMBEDDED TRACER WIRE SHALL BE INSTALLED IN EACH INDIVIDUAL CONDUIT.
   - IN A JOINT TRENCH, CONDUIT CONTAINING FIBER OPTIC CABLE SHALL NOT HAVE TRACER WIRE INSTALLED.
   - IF INSTALLATION INCLUDES ONLY ONE RUN OF CONDUIT, PULL TAPE WITH EMBEDDED TRACER WIRE SHALL BE INSTALLED IN SAME CONDUIT AS FIBER CABLE.
7. ALL PULL BOX TYPES SHALL BE PAID FOR UNDER THE CORRESPONDING PULL BOX ITEM, AND SHALL BE SIZED AS TABULATED AND SHOWN IN THE PLANS.
8. PULL BOXES SHALL HAVE A CONCRETE APRON SLOPED AWAY FROM PULL BOX OPENING. THE COST OF THE CONCRETE APRON SHALL BE PAID FOR AS PART OF PULL BOX ITEM.
9. SEE PROJECT SPECIFICATIONS FOR THE QUANTITY OF BOTH FIBER OPTIC BACKBONE AND LATERAL CABLE TO BE COILED IN EACH PULL BOX.
10. FIBER OPTIC CABLE COILS WITHIN PULL BOXES SHALL BE TIED TO EACH CABLE RACK. PLASTIC WIRE TIES SHALL NOT BE ALLOWED. CAUTION SHALL BE TAKEN TO COIL THE FIBER CABLE PER MANUFACTURER'S RECOMMENDATIONS.
11. ALL WORK TO INSTALL PULL BOX SHALL INCLUDE BUT NOT BE LIMITED TO SAW CUTTING OF PAVEMENT, REMOVAL OF PAVEMENT, CONCRETE, EARTHWORK, ALL LANDSCAPE RESTORATION AND SHALL BE PAID FOR AS PART OF PULL BOX. ALL MATERIAL SHALL BE CONTAINED AND NOT ALLOWED TO RUN OFF SITE.
12. PULL BOX TYPES AS DEPICTED ON THIS PROJECT DETAIL SHEET SHALL NOT BE INSTALLED IN THE ASPHALT OR CONCRETE SHOULDER OF THE ROADWAY.
13. A COMMUNICATIONS EMS MARKER SHALL BE EMBEDDED IN TO THE COVER AS SHOWN IN DETAILS ON THIS SHEET, OR THE CONTRACTOR MAY USE APPROVED LOCATOR BALLS.
14. ALL NON-DELIBERATE TRAFFIC PULL BOXES AND COVERS MUST COMPLY WITH ALL TEST PROVISIONS OF LATEST EDITION OF THE ANSI/SCTE 77 "SPECIFICATION FOR UNDERGROUND ENCLOSURE INTEGRITY" AND MUST MEET THE TIER 22 APPLICATION. MARKING SHOWING THE TIER 22 RATING MUST BE LABELED OR STENCILED ON THE INSIDE AND OUTSIDE OF THE BOX AND ON THE UNDERSIDE OF THE COVER. PULL BOXES SHALL BE UL 66WF LISTED IN ACCORDANCE WITH THE LATEST EDITION OF THE ANSI/SCTE 77 SPECIFICATION.
15. COVER MUST BE SECURED TO PULL BOX USING 3/8-7 LAG THREAD HEX HEAD BOLTS.
16. A COMPLIANCE LETTER FROM THE MANUFACTURE OF THE PULL BOXES, SHALL BE SUBMITTED ALONG WITH MATERIAL SUBMITTALS. THE COMPLIANCE LETTER SHALL INDICATE THAT THE PULL BOX MANUFACTURE HAS MET OR OR EXCEEDED ALL TEST PROVISIONS OF THE LATEST EDITION OF THE ANSI/SCTE 77 & ALL OF CDOT REQUIREMENTS LISTED IN PLAN DETAILS.
17. ALL PULL BOX COVERS SHALL BE FURNISHED WITH 3/8 (35) X 1/16 (2), DEEP RECESSES IN 5 PLACES. A TOTAL OF 5 TEST POINT AREAS, WITH 2 - 3/8-7 LAG LONG STAINLESS STEEL HEX HEAD BOLTS, 2 - 3/8 (10) STAINLESS STEEL FLAT WASHERS, 5 - DIRECTIONAL LABELS AND 1 - GROUND LABEL.
18. ALL COVER PULL SLOTS SHALL BE RATED FOR A MINIMUM OF 3,000 LBS.
19. LABEL WILL BE 1 1/2" DIAMETER ORANGE CIRCLE (EM2005 ORANGE COLOR), WITH BLACK ARROW GRAPHIC. COLOR & GRAPHIC TO BE SUBSURFACE SIL SCREEN PRINTED ON HP12W, .075 DIAMETER POLTCARBONATE SHEET. REVERSE SIDE ADHESIVE WILL BE 300 LSE OR EQUIVALENT & FOR USE SPECIFICALLY WITH POLYMER CONCRETE MATERIALS. ONE ARROW GRAPHIC SHALL BE INSTALLED FOR EACH TEST POINT USED INDICATING THE DIRECTION THE CONDUIT EXITS THE PULL BOX.
20. THE DEEP RECESS OF THE POLYMER CONCRETE PULL BOX SHALL BE CLEANED WITH AN ALCOHOLIC CLEANER PRIOR TO APPLYING LABELS.

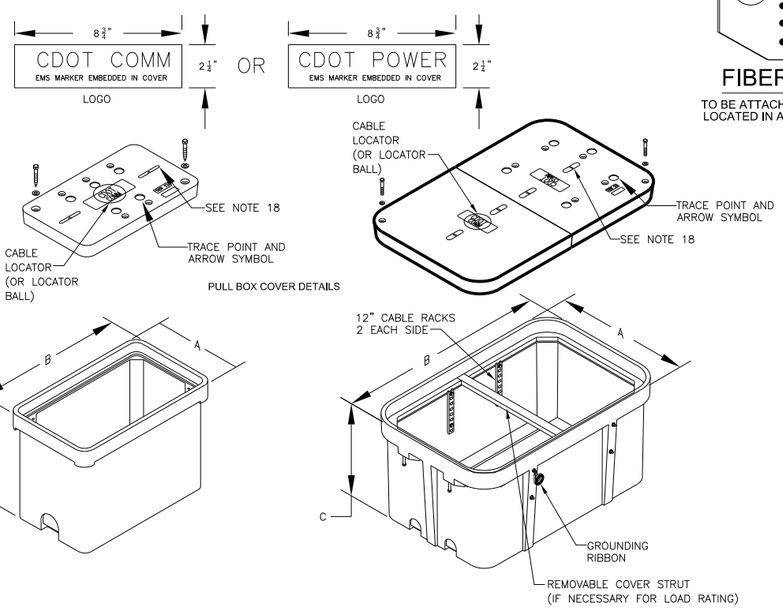

PULL BOX DETAILS

PULL BOX TYPE	MINIMUM DIMENSIONS (Inches)			COILED FIBER (Feet)	# TEST POINTS	COILED TRACER WIRE (Feet)
	A	B	C			
PULL BOX – (11" x 18" x 12")	13 3/8	20 1/4	12	25	5	6
PULL BOX – (13" x 24" x 18")	15 1/2	25	18	25	5	6
PULL BOX* – (24" x 36" x 24")	26	37 5/8	24	50	5	6
PULL BOX* – (30" x 48" x 24")	32 1/8	49 5/8	24	50	5	6
PULL BOX* – (48" x 48" x 24")	54 5/8	54 5/8	24	50	5	6
PULL BOX – (SURFACE MOUNTED)**	36	24	18	NA	NA	NA

* – 24" X 36", 30" X 48" AND 48" X 48" COVERS MUST BE TWO PIECE COVERS.
** – PULL BOX (SURFACE MOUNTED) IS INSTALLED IN THE MEDIAN BARRIER. SEE ROADWAY DETAILS.

PULL BOX DETAILS

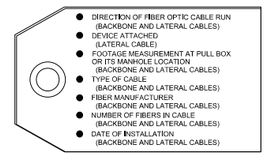

FIBER CABLE LABEL

TO BE ATTACHED TO EACH FIBER OPTIC CABLE LOCATED IN ALL PULL BOX AND ITS MANHOLES

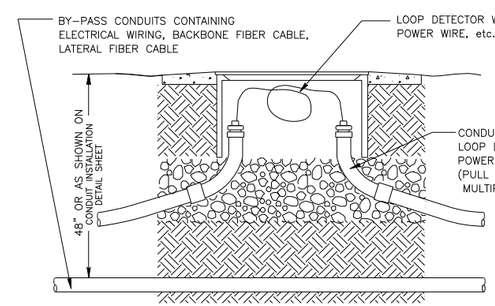

CONDUIT BYPASS DETAIL

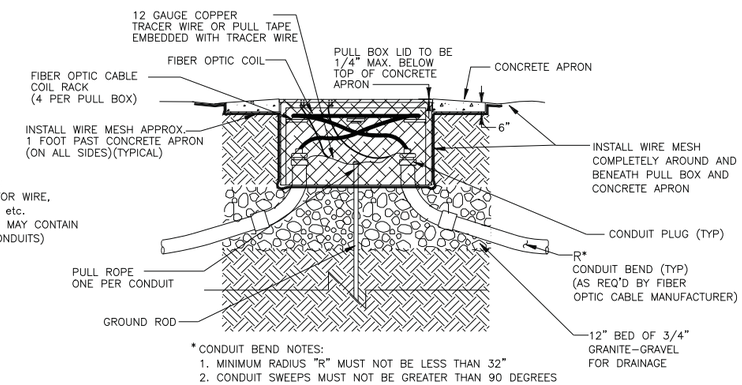

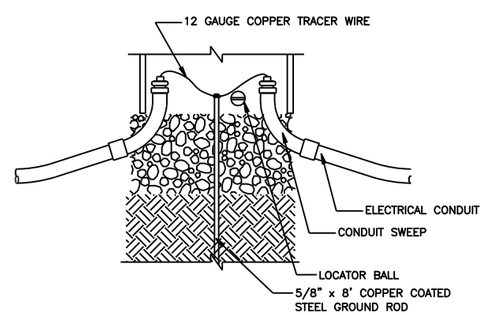

GROUNDING DETAIL

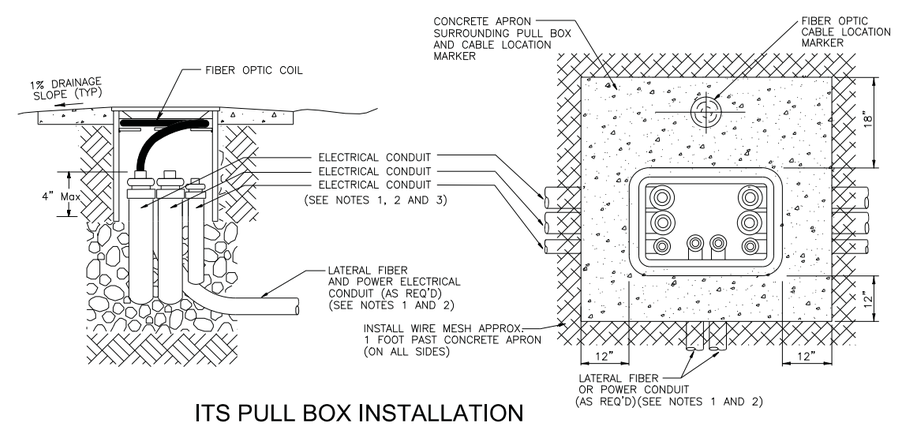

ITS PULL BOX INSTALLATION

RFC02 JUNE, 2015 (REVIEW)

Print Date: 5/6/2015	Sheet Revisions	Colorado Department of Transportation	As Constructed
File Name: 19339_DET02_Pull Box Details.dgn	Date: / Comments / Init.	4670 N. Holly, Denver, CO 80216	No Revisions:
Horiz. Scale: NTS Vert. Scale: As Noted		Phone: FAX: 303-398-6781	Revised:
apexdesign		Region 1 KK	Void:
1675 LARIMER ST, STE 480 PH: 303-339-0440			
DENVER, CO 80202 FAX: 303-325-7743			

PULL BOX DETAILS			FBR 0704-230
Designer: CDOT	Structure Numbers		19339
Detailer: CDOT			
Sheet Subset: ITS DET	Subset Sheets: 2 of 9		Sheet Number 168

molinda.reese 12:20:36 PM P:\Projects\P150201 - I-70 Over Havana St. Design Build\CADD\Details\19339_DET02_Pull Box Details.dgn

LEGEND

- FIBER OPTIC CABLE MARKER WITH INFORMATION LABEL
- PULL BOX
- MANHOLE (TMS)
- FIBER CONDUIT - (NUMBER AND SIZE AS SHOWN IN PLANS)
- E — CDOT ELECTRICAL UTILITY LOCATION MARKER
- T — CDOT TELEPHONE UTILITY LOCATION MARKER

LOCATION MARKER SPACING

MEASUREMENT	DESCRIPTION	DISTANCE (FEET)
A	FIBER OPTIC RUNNING LINE MARKER SPACING	1000
B	HANDHOLE MARKER SPACING	< 1000
C	ADDITIONAL FIBER OPTIC RUNNING LINE MARKER SPACING	C=A-B (WHERE REQUIRED) < 1000
D	UTILITY MARKER SPACING	* ■

* UTILITY LOCATION MARKERS FOR DEVICE POWER SOURCE ELECTRIC RUNS TO BE INSTALLED AT BEGINNING AND END OF UTILITY CONDUIT. IF RUNNING LINE IS LONGER THAN 500 FEET ONE ADDITIONAL MARKER SHALL BE INSTALLED AT THE MIDPOINT OF CONDUIT RUN.

■ UTILITY LOCATION MARKERS FOR RUNNING LINE ELECTRICAL CONDUIT TO BE INSTALLED AT BEGINNING AND END OF UTILITY CONDUIT, AT ALL MANHOLES AND AT A MAXIMUM SPACING OF 1000' ALONG LINE BETWEEN MANHOLES.

FIBER OPTIC AND CDOT UTILITY LOCATION MARKER INSTALLATION NOTES:

1. AREA AROUND LOCATION MARKER INSTALLATION SHALL BE RETURNED TO EXISTING GRADE AND CONDITION. THIS WORK SHALL NOT BE PAID FOR SEPARATELY, BUT BE INCLUDED IN THE COST OF LOCATION MARKER ITEM.
2. LOCATION MARKERS SHALL BE INSTALLED AT EACH PULL BOX AND MANHOLE ALONG BOTH THE BACKBONE AND LATERAL FIBER OPTIC CABLE RUNS THROUGHOUT THE PROJECT. ADDITIONAL MARKERS SHALL BE INSTALLED ALONG THE RUNNING LINE.
3. UTILITY LOCATION MARKERS SHALL BE INSTALLED AT BOTH THE UTILITY POINT OF SERVICE PULL BOX AND THE EQUIPMENT PULL BOX OR MANHOLE AT PROJECT DEVICE. ADDITIONAL MARKERS, IF REQUIRED, SHALL BE INSTALLED AT MID LOCATIONS ALONG THE UTILITY LINE AS SHOWN ON THE PLANS.
4. CONCRETE FOOTING SUPPORT FOR FIBER OPTIC CABLE LOCATION MARKERS AT PULL BOX LOCATIONS SHALL BE INCLUDED IN THE COST OF EACH PULL BOX SHOWN IN THE PROJECT.
5. CONCRETE FOOTING SUPPORTS FOR FIBER OPTIC CABLE RUNNING LINE MARKERS ARE TO BE INCLUDED IN LOCATION MARKER ITEM.
6. UTILITY LOCATION MAKERS SHALL BE INSTALLED PER THE MANUFACTURER'S RECOMMENDATIONS. CONCRETE SUPPORT FOUNDATIONS SHALL NOT BE REQUIRED FOR UTILITY LOCATION MARKERS.
7. LANDSCAPE LOCATION MARKERS SHALL BE INSTALLED IN LANDSCAPE AREAS AND AREAS SUCH AS PARKING LOTS WHICH COULD HAVE VEHICULAR TRAFFIC.
8. THE CONTRACTOR SHALL PROVIDE THE PROJECT ENGINEER AN AS-BUILT DRAWING SHOWING THE INSTALLED LOCATIONS OF ALL MARKER TYPES.
9. LOCATION MARKERS SHALL HAVE INFORMATION LABELS ATTACHED WITH ADHESIVE TO WITHSTAND HEAT AND COLD. INFORMATION ON LABELS SHALL INCLUDE CDOT CONTACT INFORMATION. NUMBERS INDICATING THE HIGHWAY MILE POINT OF THE PULL BOX OR MANHOLE, TO THE HUNDREDTH OF A MILE, SHALL BE INSTALLED BENEATH THE INFORMATION LABELS AS SHOWN ON SHEET TWO OF THIS PROJECT DETAIL.
10. WHERE REQUIRED ON NATIONAL FOREST SERVICE LAND, MARKERS SHALL BE BROWN (Fed #20059) IN COLOR. INFORMATION LABELS SHALL HAVE BLACK LETTERING ON THE BROWN BACKGROUND.

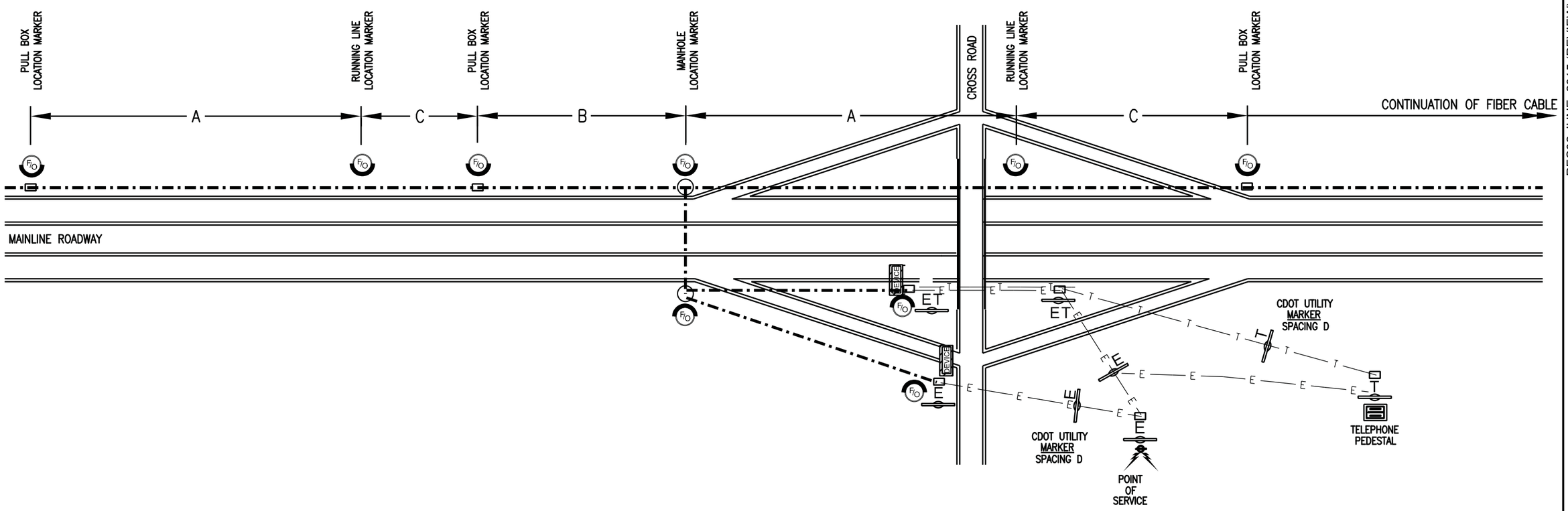

RFC02 JUNE, 2015 (REVIEW)

Print Date: 5/6/2015	Sheet Revisions	Colorado Department of Transportation	As Constructed
File Name: 19339_DET03_Fiber Marker 01.dgn	Date: / Comments / Init.	4670 N. Holly, Denver, CO 80216	No Revisions:
Horiz. Scale: NTS Vert. Scale: As Noted		Phone: FAX: 303-398-6781	Revised:
apexdesign		Region 1 KK	Void:
1675 LARIMER ST, STE 480 PH: 303-339-0440			
DENVER, CO 80202 FAX: 303-325-7743			

FIBER OPTIC AND UTILITY MARKER DETAIL

Designer:	CDOT	Structure Numbers	
Detailer:	CDOT		
Sheet Subset:	ITS DET	Subset Sheets:	3 of 9

FBR 0704-230

19339

Sheet Number 169

malinda.reese 12:20:38 PM P:\Projects\P150201 - I-70 Over Havana St. Design Build\CADD\Details\19339_DET03_Fiber Marker 01.dgn

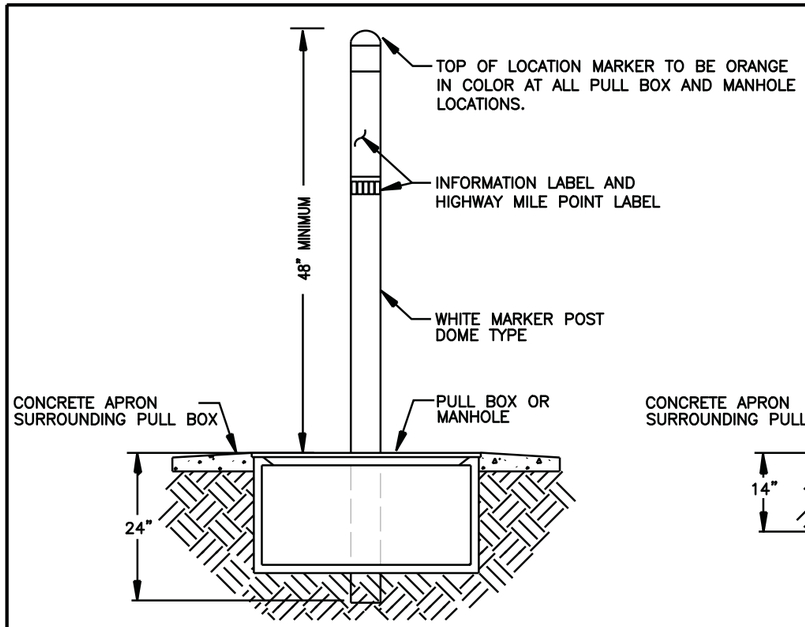

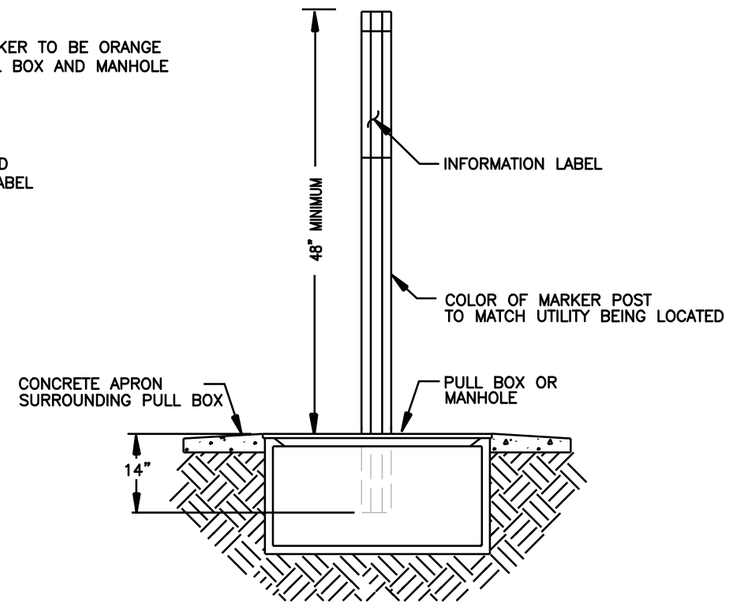

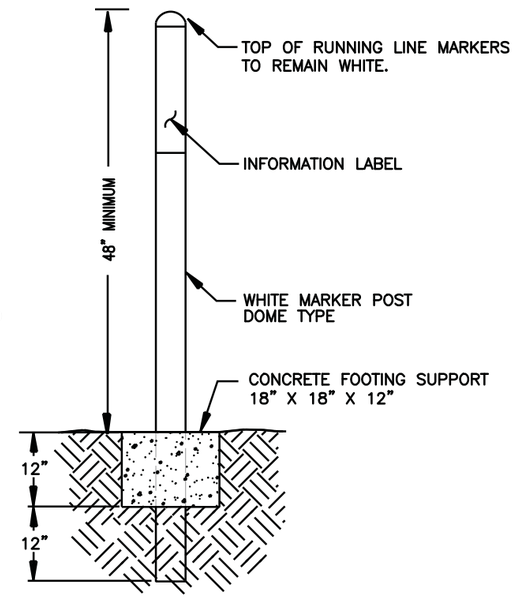

FIBER OPTIC RUNNING LINE LOCATION MARKER

3" x 6' DOME TYPE POST
(ITEM - LOCATION MARKER (FIBER OPTIC)(DOME)

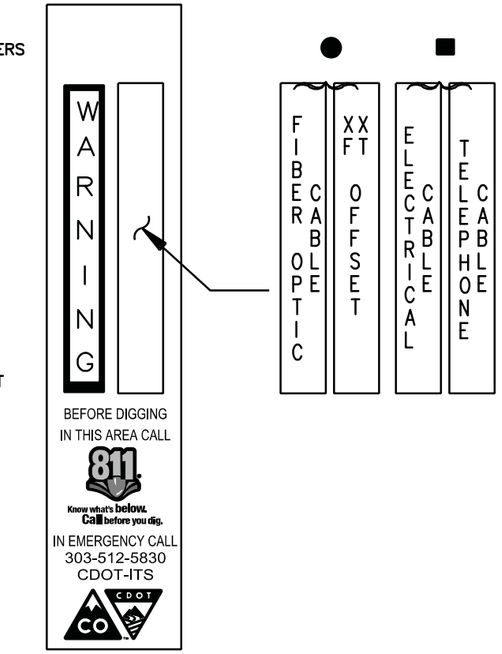

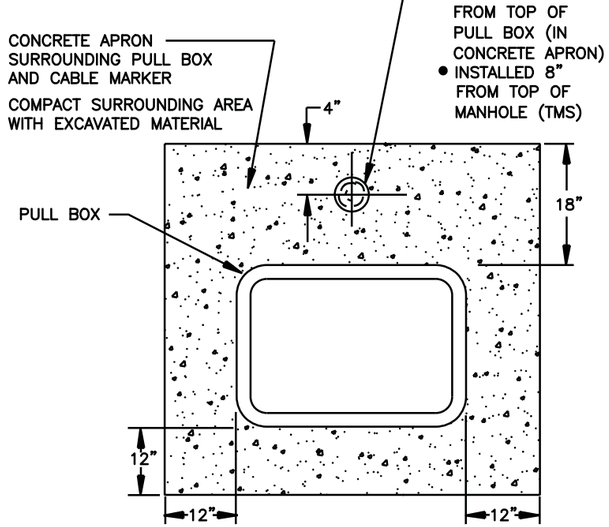

PULL BOX AND MANHOLE FIBER OPTIC LOCATION MARKER

3" x 6' DOME TYPE POST
(ITEM - LOCATION MARKER (FIBER OPTIC)(DOME)

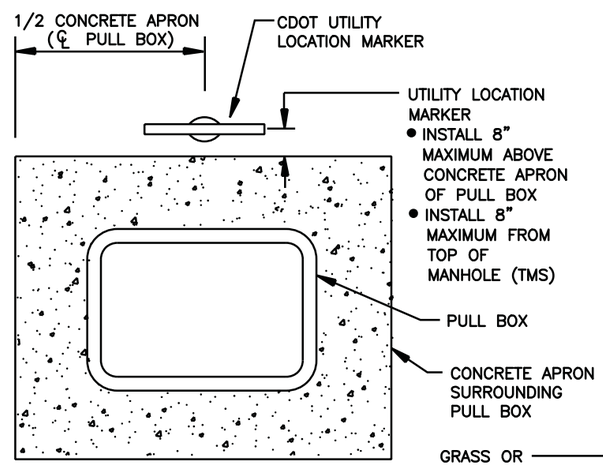

CDOT UTILITY LOCATION MARKER

3 1/2" X 62" FLAT TYPE POST
ELECTRICAL POWER RUNNING LINES AND TELEPHONE RUNNING LINES
ITEM - LOCATION MARKER (UTILITY)(FLAT SLAT)

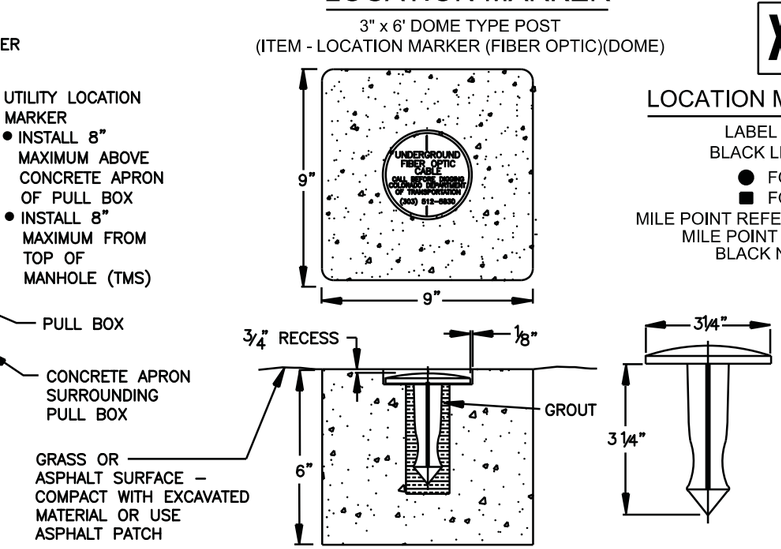

LANDSCAPE LOCATION MARKER

BRASS CAP SURVEY MONUMENT USED AS FIBER OPTIC CABLE MARKER WITH CONCRETE FOOTING SUPPORT
(ITEM - LOCATION MARKER (FIBER OPTIC)(BRASS CAP)

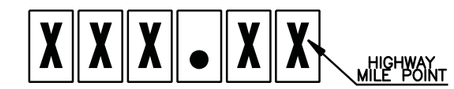

LOCATION MARKER INFORMATION LABELING

LABEL WITH CDOT CONTACT INFORMATION
BLACK LETTERING ON ORANGE BACKGROUND
● FOR FIBER OPTIC DOME MARKERS
■ FOR CDOT UTILITY FLAT MARKERS
MILE POINT REFERENCE LABEL (5 NUMBERS / 1 DECIMAL POINT)
MILE POINT DESIGNATION TO BE TO 100TH OF A MILE
BLACK NUMBERS WITH WHITE BACKGROUND

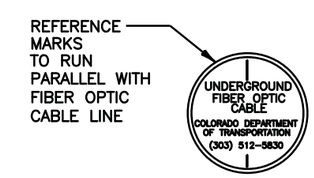

FIBER OPTIC CABLE
BRASS CAP LOCATION MARKER
INFORMATION

RFC02 JUNE, 2015 (REVIEW)

Print Date: 5/6/2015	Sheet Revisions	Colorado Department of Transportation	As Constructed	FIBER OPTIC AND UTILITY MARKER DETAIL	
File Name: 19339_DET04_Fiber Marker 02.dgn	Date: / Comments / Init.	4670 N. Holly, Denver, CO 80216	No Revisions:	Designer: CDOT / Structure Numbers	FBR 0704-230
Horiz. Scale: NTS / Vert. Scale: As Noted		Phone: / FAX: 303-398-6781	Revised:	Detailer: CDOT	19339
apexdesign		Region 1 / KK	Void:	Sheet Subset: ITS DET / Subset Sheets: 4 of 9	Sheet Number 170
1675 LARIMER ST, STE 480 PH: 303-339-0440					
DENVER, CO 80202 FAX: 303-325-7743					

molinda.reese 12:20:39 PM P:\Projects\P150201 - I-70 Over Havana St. Design Build\CADD\Details\19339_DET04_Fiber Marker 02.dgn

NOTES:

1. For pull box installation, see Project Special Details ITS PULL BOX sheet included in this plan set.
2. Attachment of communications cabinets to poles and conduit installations are typical for all pole types.
3. Attachment of communications cabinets to be 7 feet above ground where no guardrail exists. At locations with guardrail, cabinets shall be mounted at 3 feet above ground.
4. Install watertight connection for closed circuit television cabling flexable metal conduit. Contractor shall submit material type and Method Statement to Project Engineer for approval.
5. Install reducer between varying sized conduits.

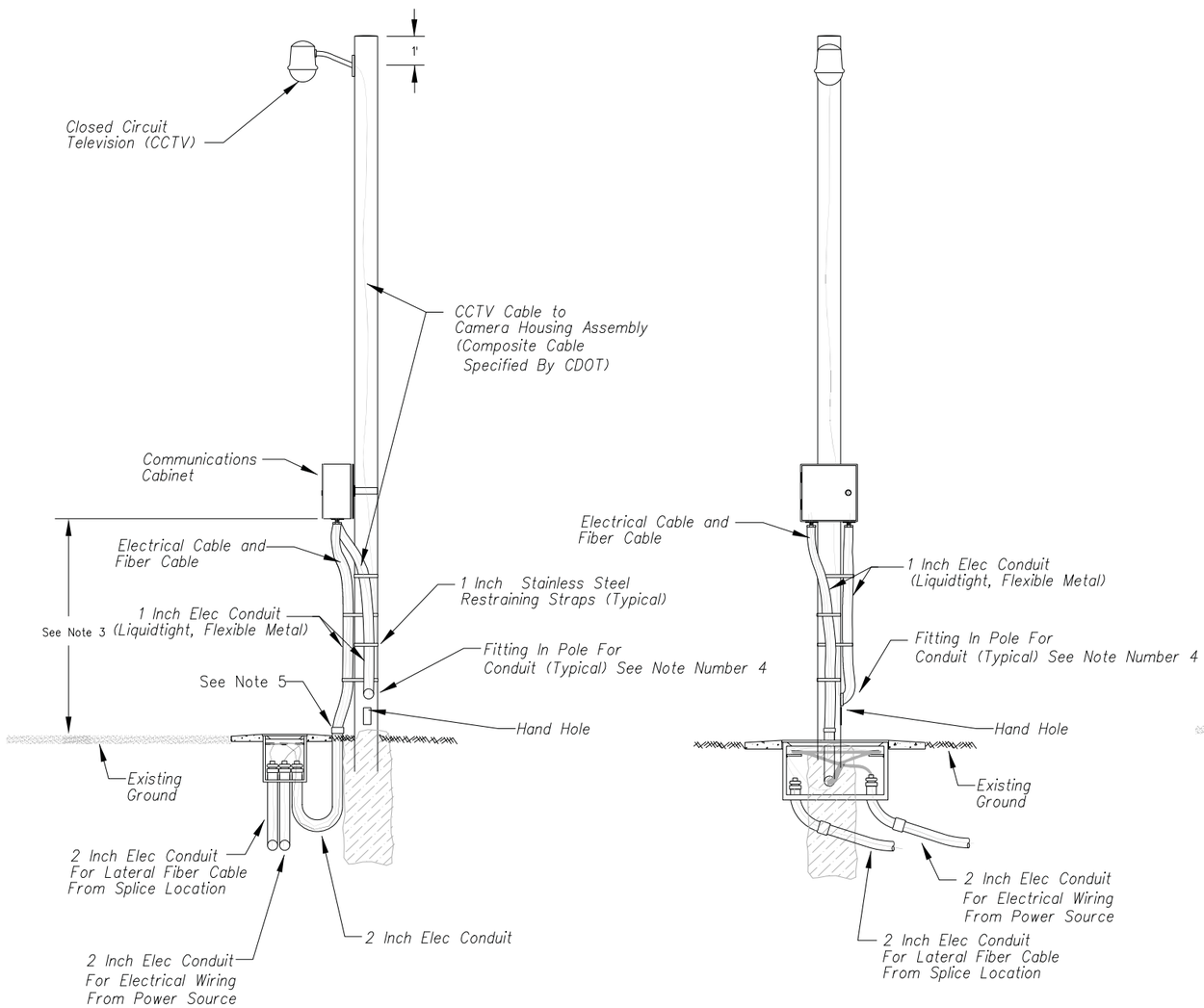

INSTALLATIONS ON FIBERGLASS POLE

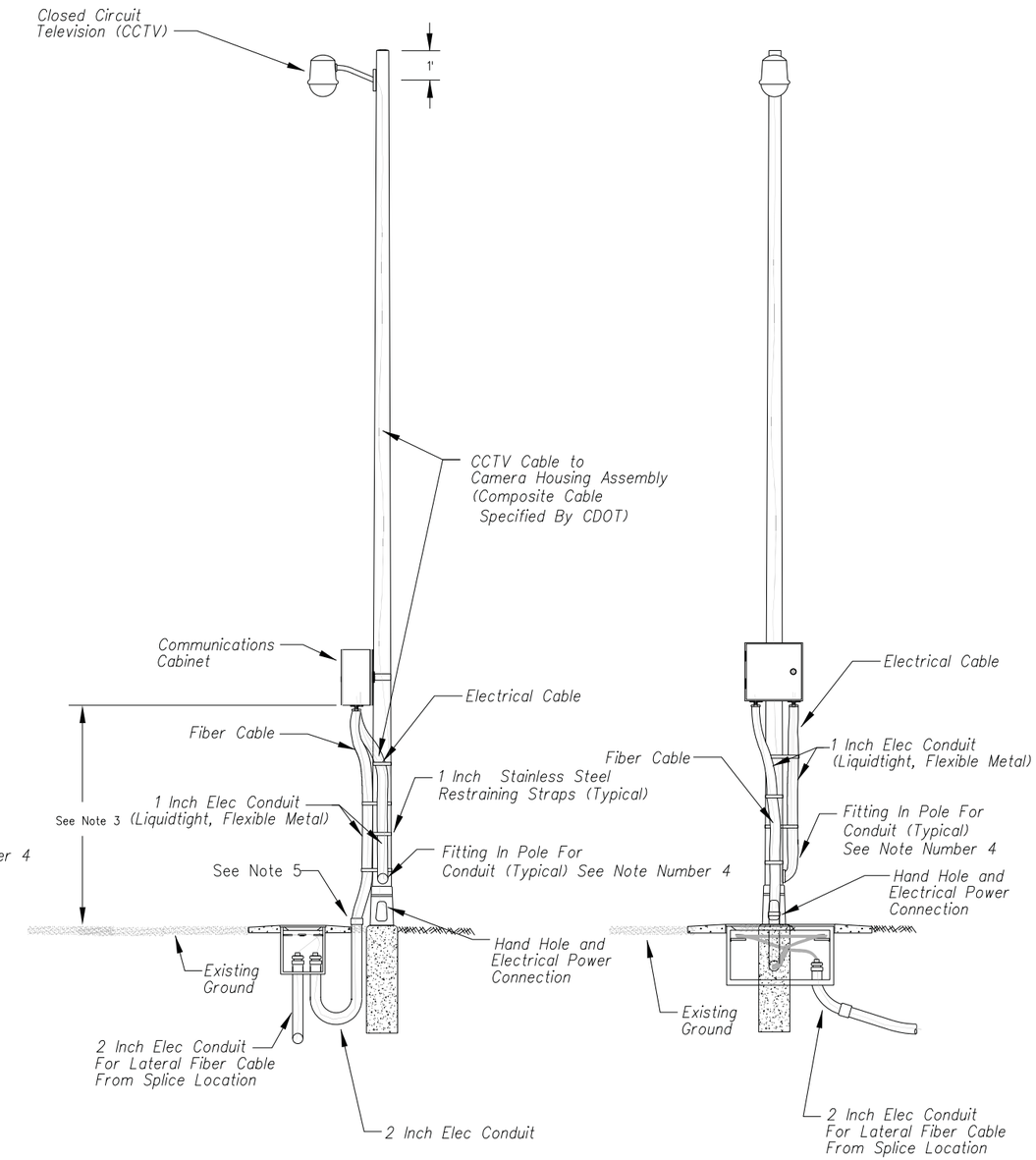

INSTALLATIONS ON LIGHT STANDARD

RFC02 JUNE, 2015 (REVIEW)

Print Date: 5/6/2015	Sheet Revisions	Colorado Department of Transportation	As Constructed
File Name: 19339_DET05_Light_Standard.dgn	Date: / Comments / Init.	4670 N. Holly, Denver, CO 80216	No Revisions:
Horiz. Scale: NTS Vert. Scale: As Noted		Phone: FAX: 303-398-6781	Revised:
apexdesign		Region 1 KK	Void:
1675 LARIMER ST, STE 480 PH: 303-339-0440			
DENVER, CO 80202 FAX: 303-325-7743			

FIBERGLASS AND LIGHT STANDARD INSTALLATION DETAILS			FBR 0704-230
Designer: CDOT	Structure Numbers		19339
Detailer: CDOT			
Sheet Subset: ITS DET	Subset Sheets: 5 of 9		Sheet Number 171

molinda.reese 12:20:41 PM P:\Projects\P150201 - I-70 Over Havana St. Design Build\CADD\Details\19339_DET05_Light_Standard.dgn

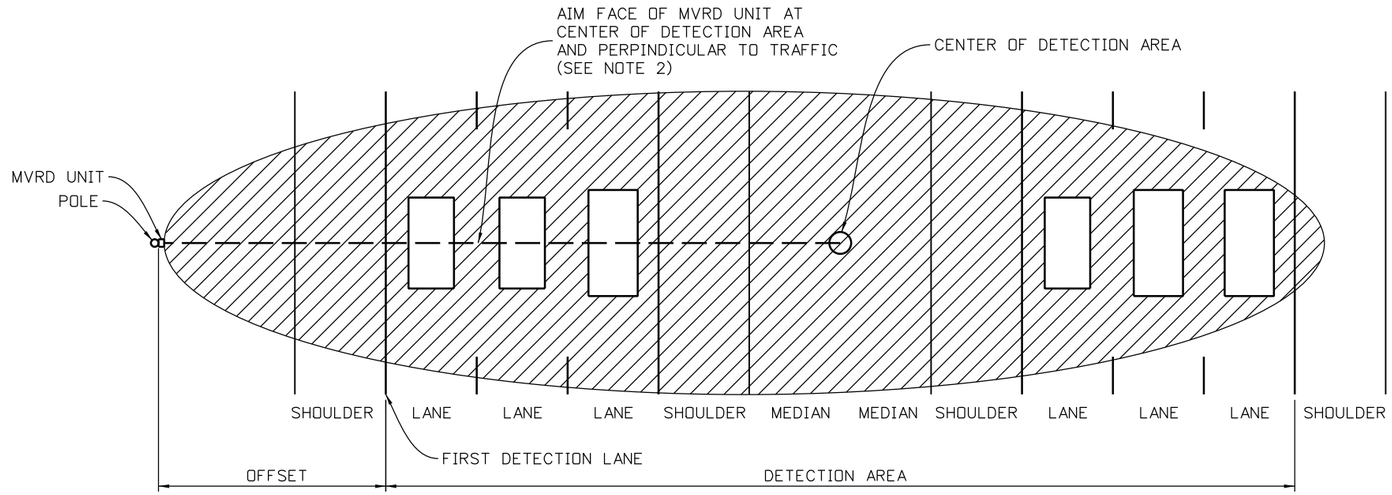

TYPICAL MVRD INSTALLATION TOP VIEW

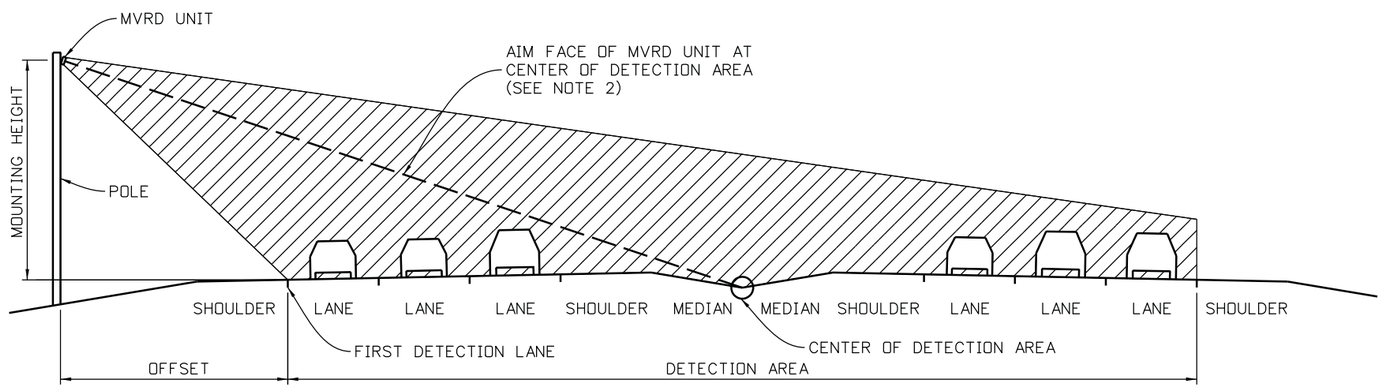

TYPICAL MVRD INSTALLATION CROSS SECTION

NOTES:

1. THIS DETAIL SPECIFIC TO WAVETRONIX SMARTSENSOR MVRD INSTALLATION.
2. SHOWN FOR BI-DIRECTIONAL DETECTION. SAME PRINCIPLES APPLY WHEN ONLY ONE DIRECTION OF TRAFFIC IS DETECTED.
3. SEE MANUFACTURER INSTALLATION INSTRUCTIONS FOR EQUIPMENT CONFIGURATION.
4. WAVETRONIX SMARTSENSOR HAS A DISTANCE LIMITATION OF 250' FROM DETECTOR TO FAR SIDE OF DETECTION AREA.
5. SEE STRUCTURAL DETAIL FOR MOUNTING DETAILS AT SIGN STRUCTURE LOCATIONS.

MVRD Mounting Recommendations

Offset from first detection lane (ft)	Recommended Mounting Height (ft)	Minimum Mounting Height (ft)	Maximum Mounting Height (ft)
6	12	9	19*
7	12	9	19*
8	12	9	20*
9	12	9	21
10	12	9	22
11	12	9	23
12	13	10	24
13	13	11	25
14	14	11	26
15	15	12	26
16	15	12	27
17	16	13	28
18	17	14	29
19	17	14	30
20	18	15	30
21	19	15	31
22	20	16	31
23	22	16	32
24	24	16	33
25	26	17	33
26	26	17	34
27	27	18	35
28	27	18	35
29	27	18	36
30	29	19	37
31	29	19	37
32	29	19	38
33	30	19	39
34	30	19	39
35	30	20	40
36	30	20	41
37	31	20	41
38	31	21	42
39	33	21	43
40	33	22	43
41	34	22	44
42	34	22	44
43	35	22	45
44	35	23	46
45	36	23	46
46	36	23	47
47	36	24	48
48	38	24	48
49	38	24	49
50-230	39	25	Must be ≤ offset

Recommended Offset

*Reduction in the number of reported speeds

RFC02 JUNE, 2015 (REVIEW)

malinda.reese 12:20:42 PM P:\Projects\P150201 - I-70 Over Havana St. Design Build\CADD\Details\19339_DET06_MVRD Installation.dgn

Print Date: 5/6/2015	Sheet Revisions	Colorado Department of Transportation	As Constructed
File Name: 19339_DET06_MVRD Installation.dgn	Date: / Comments / Init.	4670 N. Holly, Denver, CO 80216	No Revisions:
Horiz. Scale: NTS Vert. Scale: As Noted		Phone: FAX: 303-398-6781	Revised:
apexdesign		Region 1 KK	Void:
1675 LARIMER ST, STE 480 PH: 303-339-0440			
DENVER, CO 80202 FAX: 303-325-7743			

MVRD INSTALLATION TYPICAL

Designer: CDOT	Structure Numbers		FBR 0704-230
Detailer: CDOT			19339
Sheet Subset: ITS DET	Subset Sheets: 6 of 9		Sheet Number 172

Drawing showing the equipment needed in the Control Cabinet when Installing Wavetronix SmartSensors with contact closure.

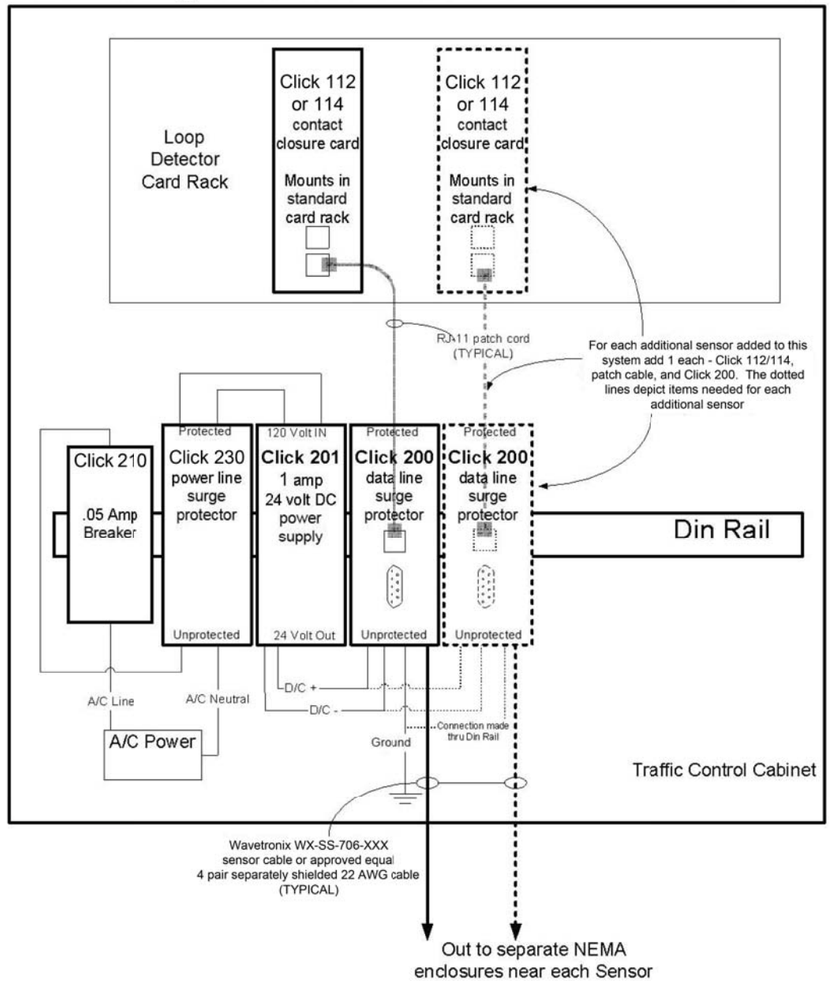

Equipment drawing for each SmartSensor located less than 500' from control cabinet (as the wire travels).

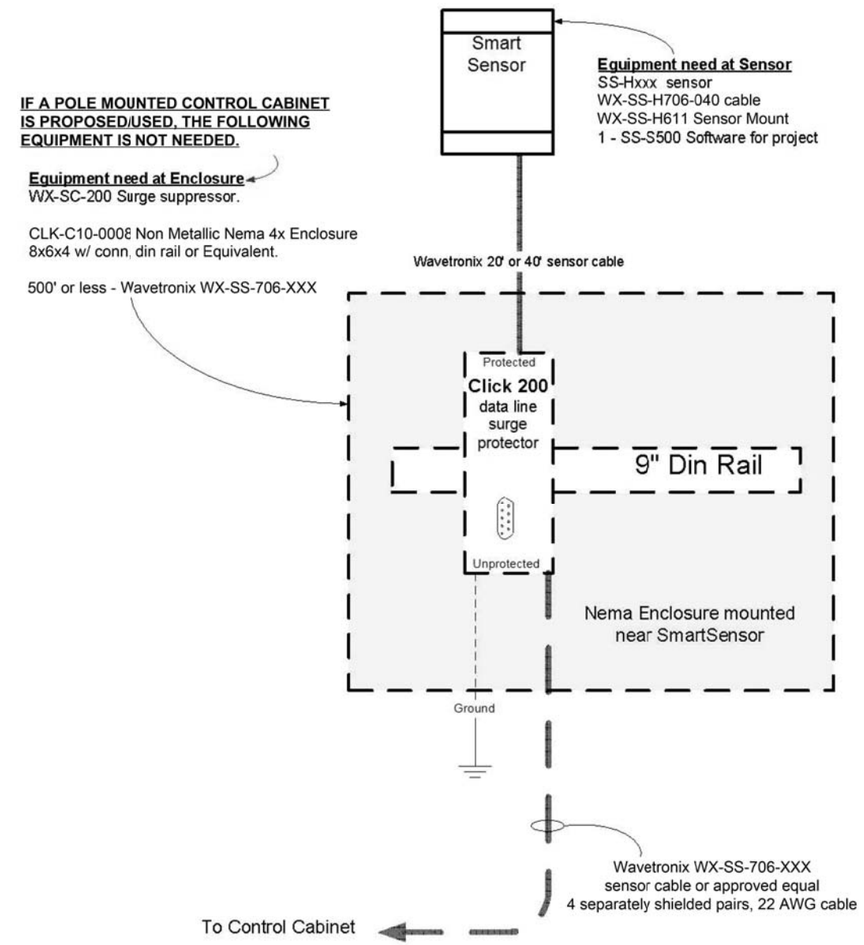

RFC02 JUNE, 2015 (REVIEW)

Print Date: 5/8/2015	Sheet Revisions		Colorado Department of Transportation	As Constructed	MVRD CABINET INSTALLATION TYPICAL
File Name: 19339_DET07_MVRD Cabinet Detail.dgn	Date: / Comments / Init.		4670 N. Holly Denver, CO 80216 Phone: FAX: 303-398-6781	No Revisions:	FBR 0704-230
Horiz. Scale: NTS Vert. Scale: As Noted			Region 1 KK	Revised:	Designer: M. REESE / Structure Numbers / 19339
apexdesign 1675 LARIMER ST, STE 480 DENVER, CO 80202 PH: 303-339-0440 FAX: 303-325-7743				Void:	Detailer: M. REESE / Sheet Subset: ITS DET / Subset Sheets: 7 of 9 / Sheet Number 173

molinda.reese 12:19:50 PM P:\Projects\P150201 - I-70 Over Havana St. Design Build\CADD\Details\19339_DET07_MVRD Cabinet Detail.dgn

LEGEND

- CONTROLLER CABINET
- PULL BOX TYPE 5 (30x48x24)
- PULL BOX TYPE 1 (11x18x12) - INCLUDED IN CONDUIT
- PULL BOX (SPECIAL)
- MICROWAVE VEHICLE DETECTOR UNIT AND POLE (STEEL LIGHT STANDARD)
- 2" CONDUIT (PLASTIC) OR (BORED AS SHOWN ON PLANS
- 6'x6' INDUCTION LOOP

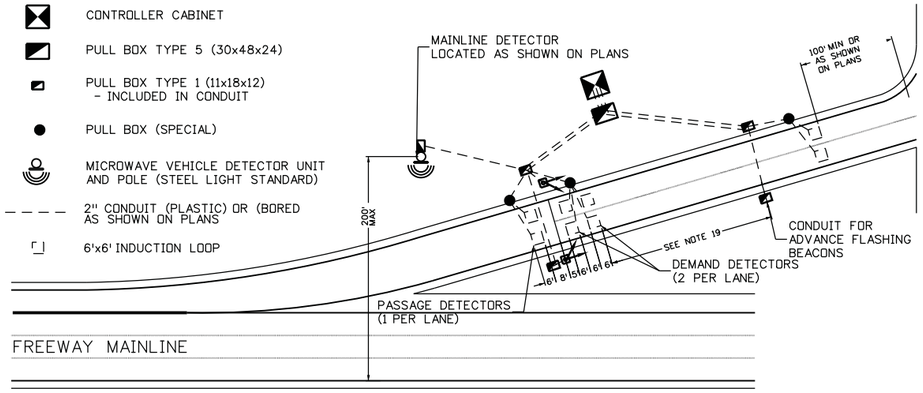

TYPICAL METERED FREEWAY RAMP (2 LANES)

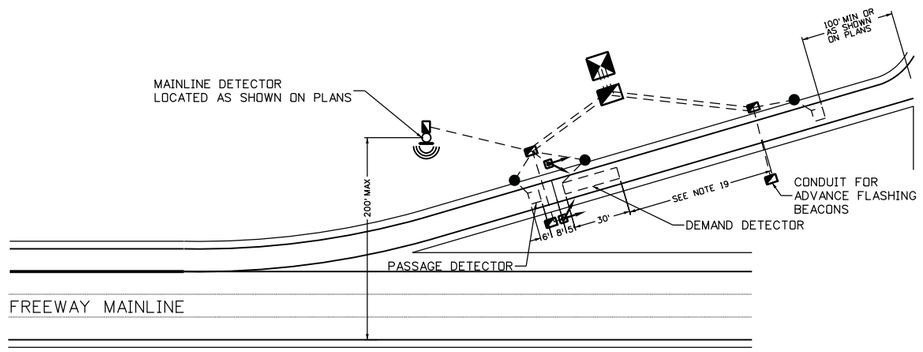

TYPICAL METERED FREEWAY RAMP (1 LANE)

TYPICAL RAMP METERING PEDESTAL POLE
(LEFT SIDE SHOWN)

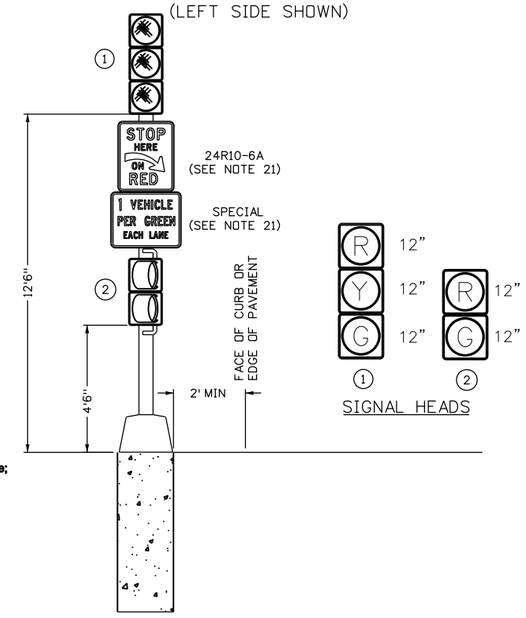

SIGNAL HEADS

SIGN LAYOUTS FOR SPECIAL PEDESTAL-MOUNT REGULATORY SIGNS

TWO-LANE RAMPS

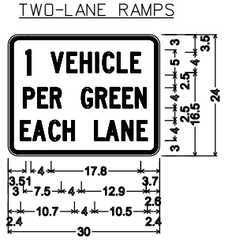

1.5" Radius, 0.6" Border, 0.4" Indent, Black on White;
"1 VEHICLE" C;
"PER GREEN" C 75% spacing;
"EACH LANE" C;

I 3.5	V 8.5	E 11.6	H 14.3	I 17.3	C 18.7	L 21.6	E 24.3	
P 3.0	E 5.8	R 8.3	G 14.5	R 17.3	E 20.2	E 22.7	H 25.2	
E 2.4	A 4.9	C 8.1	H 10.9	L 17.1	A 19.4	H 22.5	E 25.6	

ONE-LANE RAMPS - SEE PLANS FOR TYPE

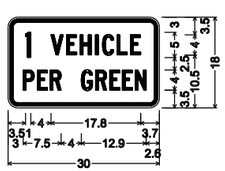

1.5" Radius, 0.6" Border, 0.4" Indent, Black on White;
"1 VEHICLE" C;
"PER GREEN" C 75% spacing;
Table of letter and object lefts.

I 3.5								
	V 8.5	E 11.6	H 14.3	I 17.3	C 18.7	L 21.6	E 24.3	
P 3.0	E 5.8	R 8.3						
	G 14.5	R 17.3	E 20.2	E 22.7	H 25.2			

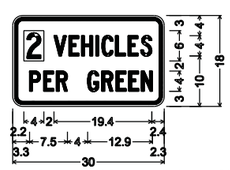

1.5" Radius, 0.6" Border, 0.4" Indent, Black on White;
"VEHICLES" C 75% spacing;
"PER GREEN" C 75% spacing;
Table of letter and object lefts.

2 2.2								
	V 8.2	E 11.1	H 13.6	I 16.5	C 17.7	L 20.4	E 22.9	S 25.4
P 3.3	E 6.1	R 8.6						
	G 14.8	R 17.7	E 20.5	E 23.0	H 25.5			

1. All detector loops shall measure as a 6'x6' square or 6'x30' as shown on plans (within 1/2" tolerance).
2. All detector loops shall be centered in the traffic lane.
3. All detector loop slots shall be cut to a minimum depth of 4"
4. Before installation of the wire, all slots shall be cleaned of debris using compressed air or water and the surface of the roadway and slots shall be dried by the use of compressed air.
5. All saw cut loops shall include 4 turns of loop detector wire. The wires shall be seated at the bottom of the saw slot.
6. No more than four loop detector wires shall be placed in a saw slot leading to the edge of roadway.
7. No detector wire splices shall be allowed in the saw slots. All loops shall have continuous detector wiring throughout the pavement.
8. All lead-in wire shall be continuous to the controller cabinet.
9. All loop and loop lead-in wires shall be clearly labeled in each pull box.
10. Prior to the sealing of the saw slots and drill holes, an inductance and leakage test shall be performed. Loop inductance shall measure between 20 and 2500 microhenries. Leakage resistance will be greater than or equal to 100 megohms. Measurements outside of these specifications will be cause for immediate loop replacement.
11. Conduit for lead-in wire off the pavement surface shall be buried at a minimum depth of 3'.
12. For new asphalt surfaces, slots shall be saw cut and detector wire installed prior to laying of the final lift of pavement. For new concrete pavement, preformed loops shall be used, see project plan sheets, project standards and project special provisions.
13. All saw cut corners shall be rounded using a 1 1/4" hole saw drilled to a minimum depth of 4". No 45 degree angled corners will be accepted.
14. The minimum saw cut slot width shall be 3/8".
15. All saw slots and drill holes shall be sealed using an approved loop sealant. Excess sealant shall be removed to avoid unnecessary high spots.
16. Pull boxes shall contain an additional 2' of loop detector wire and lead-in wire.
17. Electrical conduit at ramp metering locations shall be as follows:
    Under the roadway, 2" Electrical Conduit (Bored) - Schedule 80 minimum.
    Elsewhere, 2" Electrical Conduit (Plastic), (Unless otherwise noted on the plans).
18. Some electrical conduit trenchs shown on this sheet shall contain multiple conduits for the separation of electrical power, loop wire and/or fiber optic cable. See project plan sheets for exact number and location of conduit runs.
19. See project plan sheets for location of conduit and Advanced Flashing Beacons.
20. Two-section 12" red and green signal heads shall be "angled in" and shall be equipped with visors that may be positioned to either side of the lens, allowing only the first motorist behind the stop bar to see the signal indication.
21. Regulatory signing shall be as show in the plans. 24R10-6a for left side pole shall contain right-pointing arrow. 24R10-6a for right side pole shall contain left-pointing arrow. Special signs shall conform to the layouts shown in the plans or provided by the engineer.
22. Power wiring, loop detector wire and fiber optic cable shall be each installed in a separate conduit as shown on the project plans unless otherwise directed by the Engineer.
23. All signal heads shall be aluminum with approved LED type lenses.
24. Type 1 pull boxes needed to complete conduit installation shall be included in the cost of the conduit.
25. Passage detector loops shall be placed as shown on the plans.
26. Contractor shall contact Larry Herbert (303) 757-9511 48 hours prior to installing loops and 48 hours prior to terminating loops at each location.
27. Loop lead-ins shall run to pull box (special) at the edge of pavement. Concrete apron shall be included in the cost of Pull Box (Special).
28. Contractor shall use a 3" strip of backer rod every 3' prior to sealant to ensure that the wire stays at the bottom of the saw cut. The rest of the saw cut shall receive full depth sealant.
29. Poles and pedestals shall be designed to meet the requirements outlined in the "Standard Specifications for Structural Supports for Highway Signs, Luminaires, and Traffic Signals", published by AASHTO, for a wind velocity of 100 mph. The contractor shall submit two sets of working drawings, signed and sealed by a Professional Engineer registered in the State of Colorado, in accordance with Section 105.02 of the Standard Specifications for Road and Bridge Construction.

RFC02 JUNE, 2015 (REVIEW)

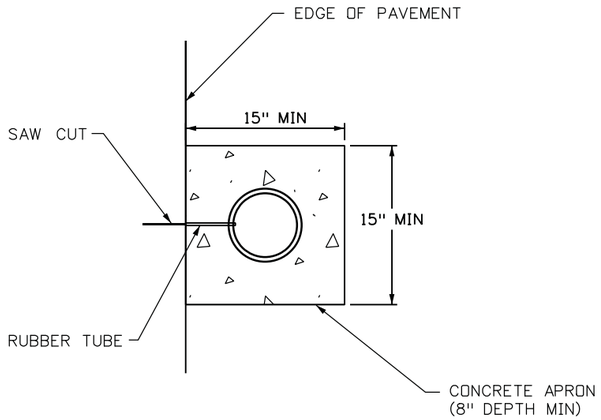

INSTALLED IN EARTH

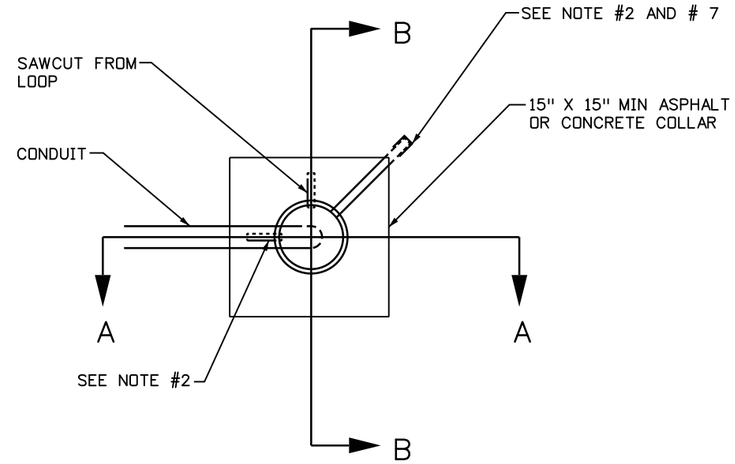

TOP VIEW

NOTES

1. PULL BOX (SPECIAL) SHALL BE A WATER VALVE STEM TYPE PULL BOX MADE OF CAST IRON OR STEEL. THE PULL BOX ITSELF SHALL HAVE THE CAPABILITY OF ACCEPTING RISER RINGS FOR FUTURE OVERLAYS. THE LID SHALL HAVE THE WORD "TRAFFIC" PRINTED ON IT.
2. PULL BOX (SPECIAL) SHALL HAVE ¾ IN. TO 1 IN. DIAMETER HOLES DRILLED OR TORCHED 3 IN. FROM TOP TO ACCEPT A 4 IN. TO 6 IN. LONG RUBBER TUBE (¾ IN. GARDEN HOSE). THE NUMBER OF HOLES SHALL BE AS PER PLANS OR AS DIRECTED BY THE ENGINEER.
3. CARE SHALL BE TAKEN DURING BACKFILL COMPACTION TO PREVENT COLLAPSE OF THE TUBES.
4. A MINIMUM 2 FEET OF SLACK IS TO BE PROVIDED ON BOTH FEED AND LOOP WIRES SO THAT ALL TESTING AND SPLICING CAN BE DONE OUTSIDE THE PULL BOX (SPECIAL).
5. PULL BOX (SPECIAL) IS TO BE SEALED WATER TIGHT BY CAULKING.
6. PULL BOX (SPECIAL) IS TO BE LOCATED IN AN AREA OF THE STREET NOT HEAVILY TRAVELED, IF POSSIBLE, AND A MINIMUM OF 12 IN. FROM THE CONCRETE GUTTER PAN.
7. IF HOT ASPHALT IS NOT AVAILABLE, A CONCRETE RING (8 IN. MINIMUM DEPTH) MAY BE ALLOWED BY THE ENGINEER. IF CONCRETE IS ALLOWED, THE RUBBER TUBE MUST BE EXTENDED BEYOND THE CONCRETE TO THE ASPHALT JOINT.
8. ALL WORK LISTED ABOVE FOR INSTALLATION OF PULL BOX (SPECIAL) SHALL NOT BE PAID FOR SEPARATELY, BUT SHALL BE INCLUDED IN THE PRICE OF CONDUIT.
9. LOOP WIRE SPLICES SHALL NOT BEEN LOCATED INSIDE THE PULLBOX (SPECIAL). SPLICING SHALL BE LOCATED INSIDE THE NEXT AVAILABLE PULLBOX IN CONDUIT RUN.

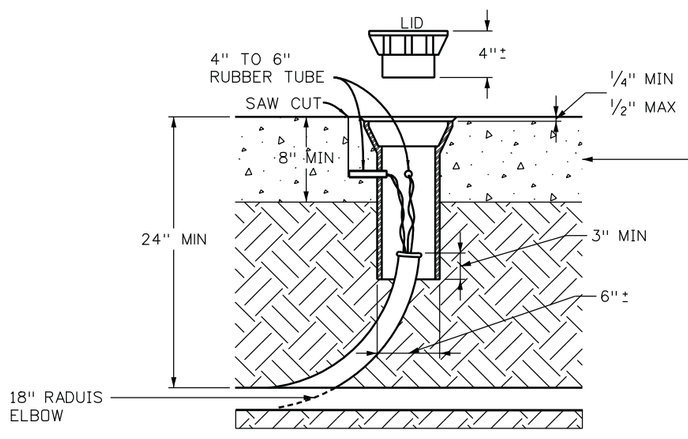

SECTION A-A

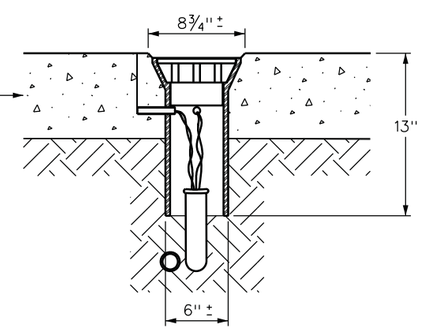

SECTION B-B

RFC02 JUNE, 2015 (REVIEW)

malinda.reese 12:21:15 PM P:\Projects\P150201 - I-70 Over Havana St. Design Build\CADD\Details\19339_DET09_PullBox Special Valve Box.dgn

Print Date: 5/6/2015	Sheet Revisions	Colorado Department of Transportation	As Constructed
File Name: 19339_DET09_Pull Box Special Valve Box.dgn	Date: / Comments / Init.	4670 N. Holly, Denver, CO 80216, Phone: FAX: 303-398-6781	No Revisions:
Horiz. Scale: NTS Vert. Scale: As Noted		Region 1 KK	Revised:
apexdesign			Void:
1675 LARIMER ST, STE 480 PH: 303-339-0440			
DENVER, CO 80202 FAX: 303-325-7743			

PULL BOX (SPECIAL) VALVE BOX DETAIL

Designer: CDOT	Structure Numbers		FBR 0704-230
Detailer: CDOT			19339
Sheet Subset: ITS DET	Subset Sheets: 9 of 9		Sheet Number 175

NOTES

1. THE CONSTRUCTION TRAFFIC CONTROL PLANS SHOWN ARE GENERALLY FOR DAYTIME TRAFFIC CONTROL WITH NORMAL TRAFFIC LANES OPEN. THE CONTRACTOR MAY DO NIGHT-TIME LANE CLOSURES FOR ACCESS AND MATERIAL DELIVERY OR REMOVAL. NIGHT TIME LANE CLOSURES SHALL MEET THE REGION 1 (OR 6) LANE CLOSURE STRATEGY TIMEFRAMES UNLESS APPROVED BY THE ENGINEER. SINGLE OR MULTI-LANE CLOSURES SHALL BE APPROVED IN SEPARATE MHTS.

2. SEE BOOK 2, SECTION 16 FOR REQUIREMENTS FOR REFRESHING TEMPORARY STRIPING.

3. THE TRANSITION FOR EASTBOUND I-70 TRAFFIC FROM ITS PHASE 1 TO PHASE 2 ALIGNMENT NEEDS TO BE COORDINATED WITH THE PAVING TRANSITION WORK, AND SHALL BE COMPLETED DURING ONE WEEKEND WITH LANE CLOSURES AND ADVANCE PUBLIC INFORMATION TO BE APPROVED BY CDOT.

4. THE TRANSITION FOR WESTBOUND I-70 TRAFFIC FROM ITS PHASE 2 TO PHASE 3 ALIGNMENT NEEDS TO BE COORDINATED WITH THE PAVING TRANSITION WORK, AND SHALL BE COMPLETED DURING ONE WEEKEND WITH LANE CLOSURES AND ADVANCE PUBLIC INFORMATION TO BE APPROVED BY CDOT.

RFC02 JUNE, 2015 (REVIEW)

bob.harr 12:02:09 PM P:\13033540B - I-70 over Havana DB\19339\Traffic_ITS\Drawings\19339_TCP-Title.dgn

Print Date: 6/17/2015
File Name: 19339_TCP-Title.dgn
Horiz. Scale: 1:1 Vert. Scale: As Noted

LAWRENCE
TSIOUVARAS SIMMONS HOLDERNESS
CONSULTING ENGINEERS

Sheet Revisions		
Date:	Comments	Init.

Colorado Department of Transportation
CDOT
4670 N. Holly
Denver, CO 80216
Phone: 303-398-6767 FAX: 303-398-6781
Region 1 KK

As Constructed
No Revisions:
Revised:
Void:

I-70 OVER HAVANA STREET DESIGN-BUILD
GENERAL INFORMATION
CONSTRUCTION TRAFFIC CONTROL

Designer: D. WOOLFALL
Detailer: A. MELNIC
Sheet Subset: PHASE
Structure Numbers
Subset Sheets: 1 of 29

Project No./Code
FBR 0704-230
19339
Sheet Number 176

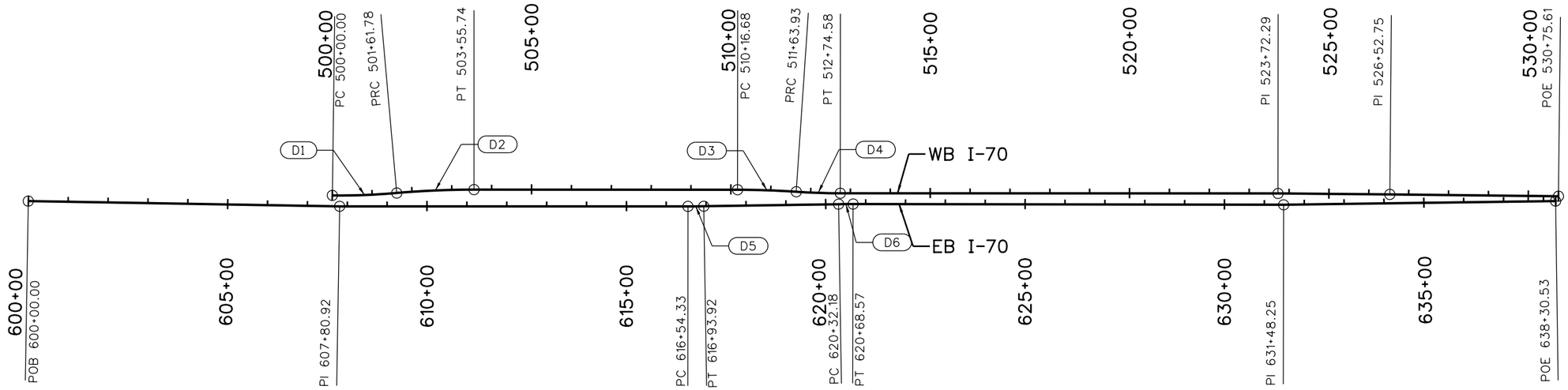

PHASE 1A

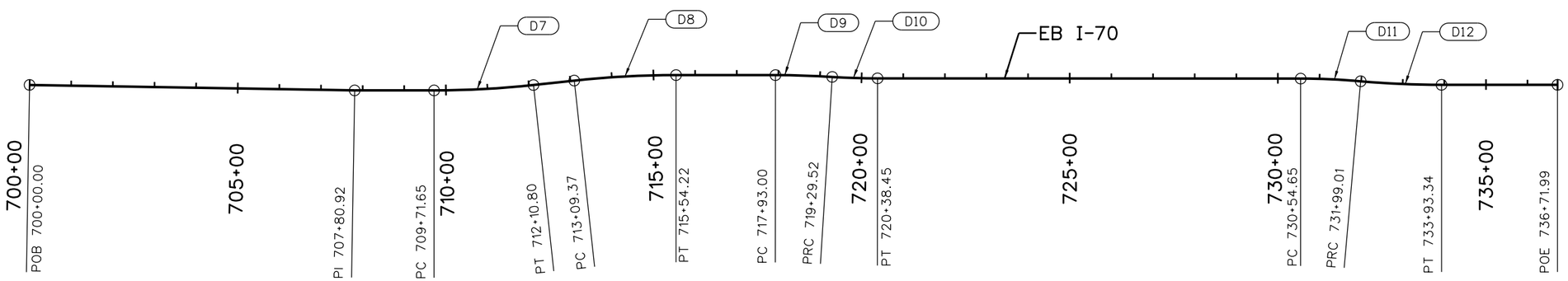

PHASE 1B

RFC02 JUNE, 2015 (REVIEW)

bob.harr 12:02:14 PM P:\1303354DB - I-70 over Havana DB\19339\Traffic_ITS\Drawings\19339_PhaseGeom.dgn

Print Date: 6/17/2015	Sheet Revisions	Colorado Department of Transportation	As Constructed
File Name: 19339_PhaseGeom.dgn	Date: / Comments / Init.	4670 N. Holly, Denver, CO 80216, Phone: 303-398-6767 FAX: 303-398-6781	No Revisions:
Horiz. Scale: 1:300 Vert. Scale: As Noted		Region 1 KK	Revised:
LAWRENCE TSIOUVARAS SIMMONS HOLDERNESS CONSULTING ENGINEERS			Void:

I-70 OVER HAVANA STREET DESIGN-BUILD
DETOUR GEOMETRY PLAN
CONSTRUCTION TRAFFIC CONTROL

Designer:	D. WOOLFALL	Structure Numbers	
Detailer:	A. MELNIC		
Sheet Subset:	PHASE	Subset Sheets:	2 of 29

Project No./Code
FBR 0704-230
19339
Sheet Number 177

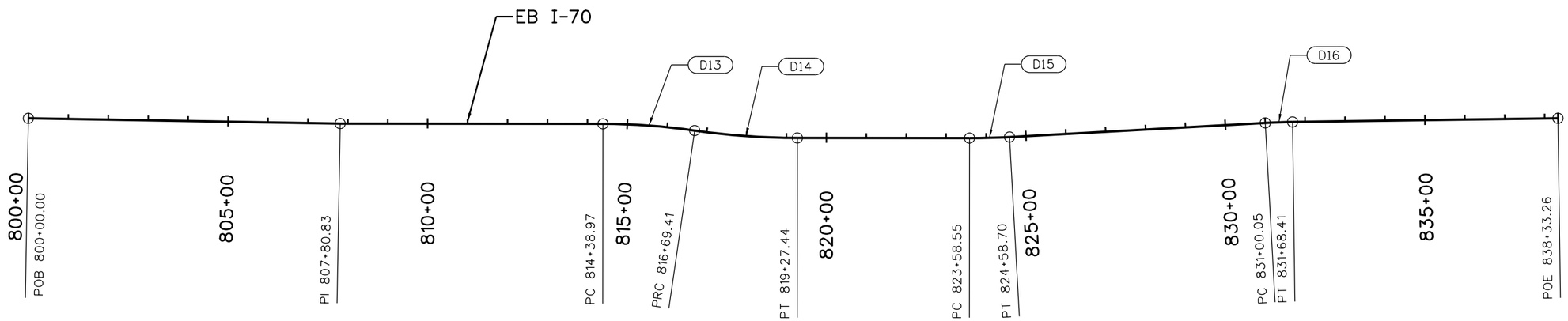

PHASE 2

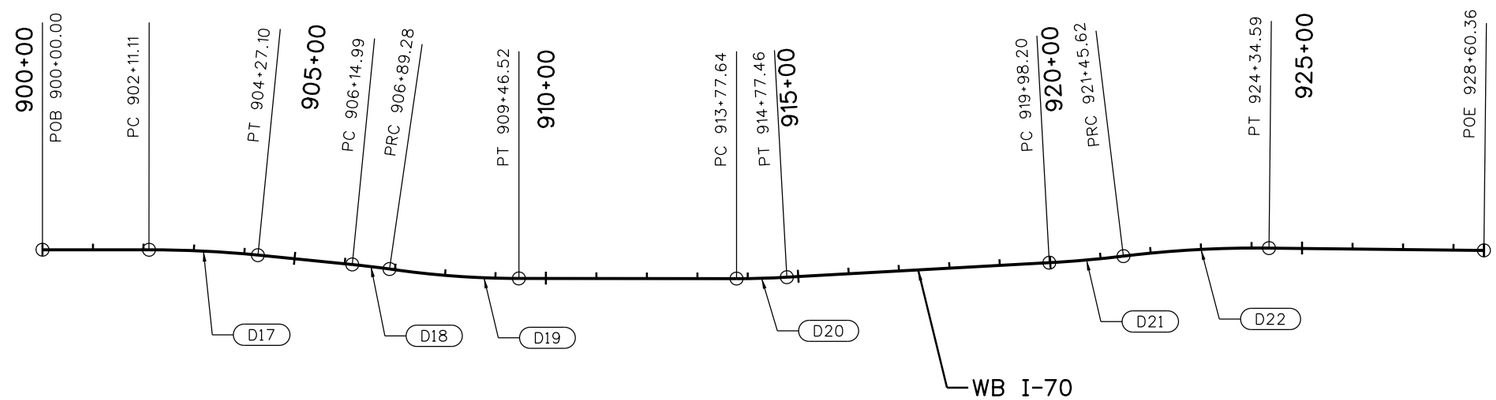

PHASE 3

RFC02 JUNE, 2015 (REVIEW)

bob.harr 12:02:17 PM P:\13033540B - I-70 over Havana DB\19339\Traffic_ITS\Drawings\19339_PhaseGeom.dgn

Print Date: 6/17/2015	Sheet Revisions	Colorado Department of Transportation	As Constructed
File Name: 19339_PhaseGeom.dgn	Date: / Comments / Init.	4670 N. Holly, Denver, CO 80216, Phone: 303-398-6767 FAX: 303-398-6781	No Revisions:
Horiz. Scale: 1:300 Vert. Scale: As Noted		Region 1 KK	Revised:
LAWRENCE TSIOUVARAS SIMMONS HOLDERNESS CONSULTING ENGINEERS			Void:

I-70 OVER HAVANA STREET DESIGN-BUILD DETOUR GEOMETRY PLAN CONSTRUCTION TRAFFIC CONTROL			Project No./Code
Designer: D. WOOLFALL	Structure Numbers		FBR 0704-230
Detailer: A. MELNIC			19339
Sheet Subset: PHASE	Subset Sheets: 3 of 29		Sheet Number 178

Phase 1A WB Horizontal Elements Table Report

Element	Point Type	Station	Northing	Easting	Radius	Length	Delta / Theta	Rotation Direction	e	MDS
Arc D1	PC	500+00.00	454657.21	677746.77						
Arc D1	PI	500+80.96	454647.35	677827.12	1600.00	161.78	5° 47'35"	Left	NC	55 mph
Arc D1	CC		456245.28	677941.78						
Arc D1/D2	PRC	501+61.78	454645.64	677908.06						
Arc D2	PI	502+58.82	454643.59	678005.08	2195.00	193.96	5° 03'47"	Right	NC	55 mph
Arc D2	CC		452451.13	677861.80						
Arc D2	PT	503+55.74	454632.99	678101.55						
Arc D3	PC	510+16.68	454560.80	678758.53						
Arc D3	PI	510+90.33	454552.76	678831.75	2195.00	147.26	3° 50'38"	Right	NC	55 mph
Arc D3	CC		452378.94	678518.79						
Arc D3/D4	PRC	511+63.93	454539.82	678904.26						
Arc D4	PI	512+19.28	454530.11	678958.74	1655.00	110.64	3° 49'49"	Left	NC	55 mph
Arc D4	CC		456169.10	679194.90						
Arc D4	PT	512+74.58	454524.05	679013.75						
Tangent	PI	523+72.29	454403.90	680104.87						
Tangent	PI	526+52.75	454371.00	680383.39						
Tangent	POE	530+75.61	454320.53	680803.23						

Phase 1A EB Horizontal Elements Table Report

Element	Point Type	Station	Northing	Easting	Radius	Length	Delta / Theta	Rotation Direction	e	MDS
Tangent	POB	600+00.00	454726.02	676987.34						
Tangent	PI	607+80.92	454627.99	677762.09						
Arc D5	PC	616+54.33	454532.70	678630.29						
Arc D5	PI	616+74.13	454530.54	678649.96	2445.00	39.59	0° 55'40"	Left	NC	55mph
Arc D5	CC		456963.10	678897.04						
Arc D5	PT	616+93.92	454528.70	678669.67						
Arc D6	PC	620+32.18	454497.24	679006.46						
Arc D6	PI	620+50.38	454495.55	679024.58	2055.00	36.39	1° 00'53"	Right	NC	55 mph
Arc D6	CC		452451.15	678815.36						
Arc D6	PT	620+68.57	454493.54	679042.67						
Tangent	PI	631+48.25	454374.11	680115.72						
Tangent	POE	638+30.53	454309.13	680794.89						

Phase 1B EB Horizontal Elements Table Report

Element	Point Type	Station	Northing	Easting	Radius	Length	Delta / Theta	Rotation Direction	e	MDS
Tangent	POB	700+00.00	454726.02	676987.34						
Tangent	PI	707+80.92	454627.99	677762.09						
Arc D7	PC	709+71.65	454607.18	677951.68						
Arc D7	PI	710+91.34	454594.12	678070.65	2200	239.15	6° 13'42"	Left	NC	55mph
Arc D7	CC		456794.05	678191.70						
Arc D7	PT	712+10.80	454594.05	678190.35						
Arc D8	PC	713+09.37	454593.99	678288.91						
Arc D8	PI	714+31.92	454593.91	678411.46	2250	244.86	6° 14'07"	Right	NC	55mph
Arc D8	CC		452343.99	678287.53						
Arc D8	PT	715+54.22	454580.53	678533.28						
Arc D9	PC	717+93.00	454554.45	678770.63						
Arc D9	PI	718+61.28	454546.99	678838.51	2190	136.52	3° 34'18"	Right	NC	55mph
Arc D9	CC		452377.55	678531.43						
Arc D9/D10	PRC	719+29.52	454535.32	678905.78						
Arc D10	PI	719+84.00	454526.00	678959.46	1754	108.93	3° 33'30"	Left	NC	55mph
Arc D10	CC		456263.50	679205.60						
Arc D10	PT	720+38.45	454520.04	679013.62						
Arc D11	PC	730+54.65	454408.81	680023.71						
Arc D11	PI	731+26.88	454400.90	680095.50	1650	144.37	5° 00'47"	Right	NC	55mph
Arc D11	CC		452768.72	679843.11						
Arc D11/D12	PRC	731+99.01	454386.76	680166.33						
Arc D12	PI	732+96.24	454367.71	680261.68	2200	194.33	5° 03'39"	Left	NC	55mph
Arc D12	CC		456544.13	680597.30						
Arc D12	PT	733+93.34	454357.15	680358.33						
Tangent	POE	736+71.99	454326.88	680635.33						

Phase 2 EB Horizontal Elements Table Report

Element	Point Type	Station	Northing	Easting	Radius	Length	Delta / Theta	Rotation Direction	e	MDS
Tangent	POB	800+00.00	454726.02	676987.34						
Tangent	PI	807+80.83	454628.00	677761.99						
Arc D13	PC	814+38.97	454555.63	678416.15						
Arc D13	PI	815+54.39	454542.94	678530.87	1607.00	230.44	8° 12'58"	Right	NC	55 mph
Arc D13	CC		452958.37	678239.44						
Arc D13/D14	PRC	816+69.41	454513.98	678642.59						
Arc D14	PI	817+98.65	454481.56	678767.70	1793.00	258.03	8° 14'43"	Left	NC	55 mph
Arc D14	CC		456249.64	679092.41						
Arc D14	PT	819+27.44	454467.41	678896.15						
Arc D15	PC	823+58.55	454420.23	679324.68						
Arc D15	PI	824+08.64	454414.74	679374.47	1793.00	100.15	3° 12'02"	Left	NC	55 mph
Arc D15	CC		456202.45	679520.93						
Arc D15	PT	824+58.70	454412.05	679424.48						
Arc D16	PC	831+00.05	454377.55	680064.90						
Arc D16	PI	831+34.23	454375.71	680099.03	1644.00	68.36	2° 22'57"	Right	NC	55 mph
Arc D16	CC		452735.93	679976.47						
Arc D16	PT	831+68.41	454372.45	680133.06						
Tangent	POE	838+33.26	454309.13	680794.89						

Phase 3 WB Horizontal Elements Table Report

Element	Point Type	Station	Northing	Easting	Radius	Length	Delta / Theta	Rotation Direction	e	MDS
Tangent	POB	900+00.00	454632.63	677964.80						
Arc D17	PC	902+11.11	454609.58	678174.66						
Arc D17	PI	903+19.19	454597.78	678282.09	2200.00	215.98	5° 37'30"	Right	NC	55 mph
Arc D17	CC		452422.73	677934.46						
Arc D17	PT	904+27.10	454575.51	678387.85						
Arc D18	PC	906+14.99	454536.79	678571.70						
Arc D18	PI	906+52.14	454529.13	678608.06	1613.00	74.29	2° 38'20"	Right	NC	55 mph
Arc D18	CC		452958.41	678239.29						
Arc D18/D19	PRC	906+89.28	454519.81	678644.02						
Arc D19	PI	908+18.12	454487.48	678768.74	1787.00	257.24	8° 14'52"	Left	NC	55 mph
Arc D19	CC		456249.64	679092.41						
Arc D19	PT	909+46.52	454473.38	678896.81						
Arc D20	PC	913+77.64	454426.19	679325.34						
Arc D20	PI	914+27.56	454420.72	679374.96	1787.00	99.82	3° 12'02"	Left	NC	55 mph
Arc D20	CC		456202.45	679520.94						
Arc D20	PT	914+77.46	454418.04	679424.81						
Arc D21	PC	919+98.20	454390.03	679944.80						
Arc D21	PI	920+71.94	454386.06	680018.43	2250.00	147.42	3° 45'14"	Left	NC	55 mph
Arc D21	CC		456636.77	680065.83						
Arc D21/D22	PRC	921+45.62	454386.92	680092.16						
Arc D22	PI	922+90.31	454388.62	680236.84	2200.00	288.97	7° 31'33"	Right	NC	55 mph
Arc D22	CC		452187.08	680117.91						
Arc D22	PT	924+34.59	454371.35	680380.50						
Tangent	POE	928+60.36	454320.53	680803.23						

RFC02 JUNE, 2015 (REVIEW)

bob.harr 12:02:21 PM P:\13033540B - I-70 over Havana DB\19339\Traffic_ITS\Drawings\19339_PhaseGeom.dgn

Print Date: 6/17/2015
File Name: 19339_PhaseGeom.dgn
Horiz. Scale: 1:1 Vert. Scale: As Noted

LAWRENCE
TSIOUVARAS SIMMONS HOLDERNESS
CONSULTING ENGINEERS

Sheet Revisions		
Date:	Comments	Init.

Colorado Department of Transportation
CDOT
4670 N. Holly
Denver, CO 80216
Phone: 303-398-6767 FAX: 303-398-6781
Region 1 KK

As Constructed
No Revisions:
Revised:
Void:

I-70 OVER HAVANA STREET DESIGN-BUILD
DETOUR GEOMETRY REPORTS
CONSTRUCTION TRAFFIC CONTROL

Designer: D. WOOLFALL
Detailer: A. MELNIC
Sheet Subset: PHASE
Structure Numbers
Subset Sheets: 4 of 29

Project No./Code
FBR 0704-230
19339
Sheet Number 179

ADVANCE SIGNING FOR THE DURATION OF THE PROJECT IS SHOWN IN THESE SHEETS. ADDITIONAL ADVANCE SIGNING FOR SHORT TERM AND OVERNIGHT WORK INCLUDING OVERLAY, ALIGNMENT SHIFTS, MEDIAN WORK, ETC. MAY REQUIRE SIGN PLACEMENT EARLIER THAN THE ROAD WORK AHEAD SIGNS.

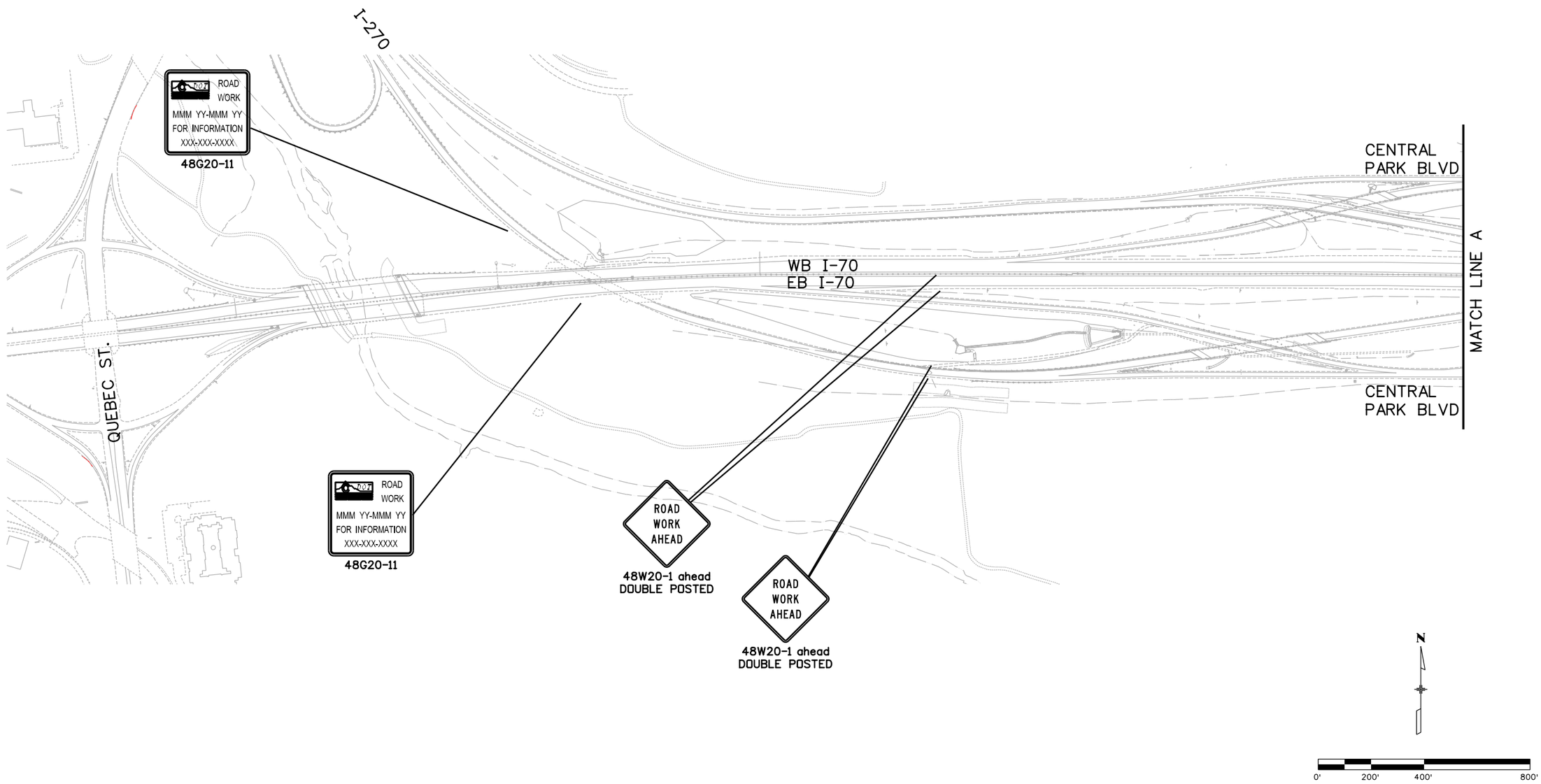

Print Date: 6/17/2015	Sheet Revisions	Colorado Department of Transportation	As Constructed
File Name: 19339_AdvCon-Overall.dgn	Date: / Comments / Init.	4670 N. Holly, Denver, CO 80216, Phone: 303-398-6767 FAX: 303-398-6781	No Revisions:
Horiz. Scale: 1:400 Vert. Scale: As Noted		Region 1 KK	Revised:
TSIOUVARAS SIMMONS HOLDERNESS CONSULTING ENGINEERS			Void:

I-70 OVER HAVANA STREET DESIGN-BUILD
LONG TERM
ADVANCE CONSTRUCTION SIGNING

Designer: D. WOOLFALL
Detailer: D. WOOLFALL
Structure Numbers
Sheet Subset: PHASE
Subset Sheets: 5 of 29

Project No./Code
FBR 0704-230
19339
Sheet Number 180

bob.harr 12:02:26 PM P:\13033540B - I-70 over Havana DB\19339\Traffic_ITS\Drawings\19339_AdvCon-Overall.dgn

RFC02 JUNE, 2015 (REVIEW)

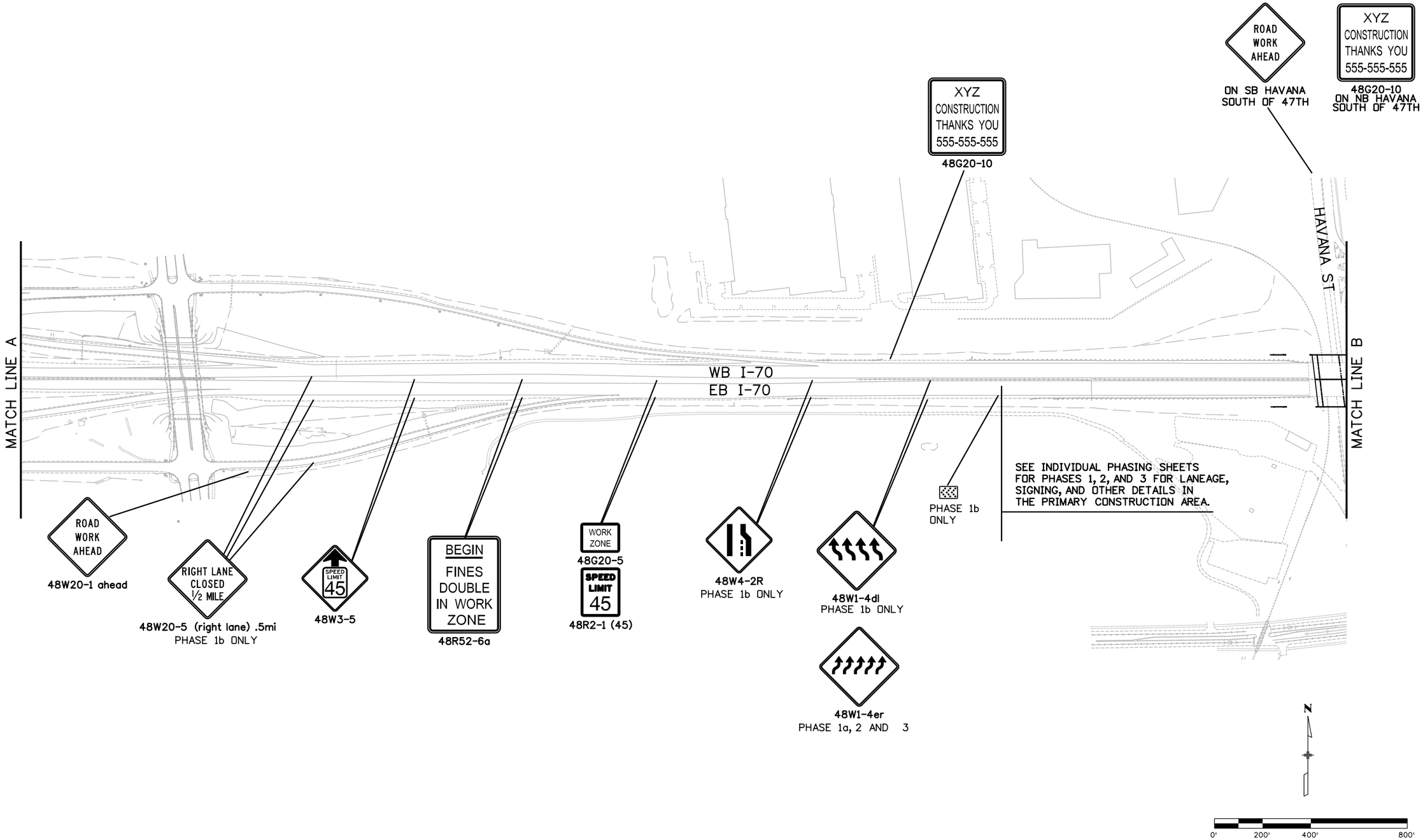

RFC02 JUNE, 2015 (REVIEW)

bob.harr 12:02:30 PM P:\13033540B - I-70 over Havana DB\19339\Traffic_ITS\Drawings\19339_AdvCon-Overall.dgn

Print Date: 6/17/2015	Sheet Revisions	Colorado Department of Transportation	As Constructed
File Name: 19339_AdvCon-Overall.dgn	Date: / Comments / Init.	4670 N. Holly, Denver, CO 80216, Phone: 303-398-6767 FAX: 303-398-6781	No Revisions:
Horiz. Scale: 1:400 Vert. Scale: As Noted		Region 1 KK	Revised:
LAWRENCE TSIOUVARAS SIMMONS HOLDERNESS CONSULTING ENGINEERS			Void:

I-70 OVER HAVANA STREET DESIGN-BUILD LONG TERM ADVANCE CONSTRUCTION SIGNING			Project No./Code
Designer: D. WOOLFALL	Structure Numbers		FBR 0704-230
Detailer: D. WOOLFALL			19339
Sheet Subset: PHASE	Subset Sheets: 6 of 29		Sheet Number 181

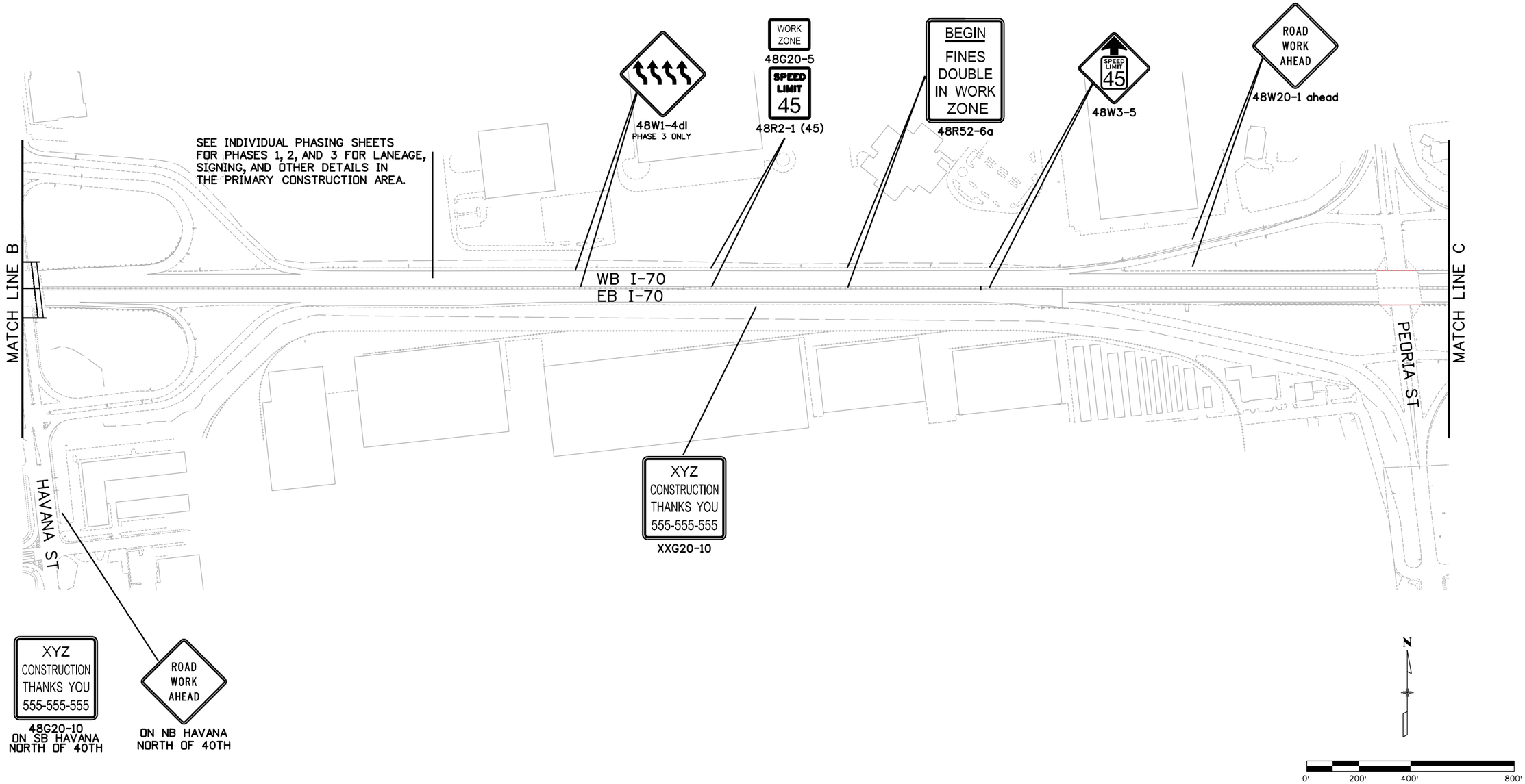

RFC02 JUNE, 2015 (REVIEW)

bob.harr 12:02:34 PM P:\130335408 - I-70 over Havana DB\19339\Traffic_ITS\Drawings\19339_AdvCon-Overall.dgn

Print Date: 6/17/2015	Sheet Revisions	Colorado Department of Transportation	As Constructed
File Name: 19339_AdvCon-Overall.dgn	Date: / Comments / Init.	4670 N. Holly, Denver, CO 80216, Phone: 303-398-6767 FAX: 303-398-6781	No Revisions:
Horiz. Scale: 1:400 Vert. Scale: As Noted		Region 1 KK	Revised:
LAWRENCE TSIOUVARAS SIMMONS HOLDERNESS CONSULTING ENGINEERS			Void:

I-70 OVER HAVANA STREET DESIGN-BUILD LONG TERM ADVANCE CONSTRUCTION SIGNING			Project No./Code
Designer: D. WOOLFALL	Structure Numbers		FBR 0704-230
Detailer: D. WOOLFALL			19339
Sheet Subset: PHASE	Subset Sheets: 7 of 29		Sheet Number 182

ADVANCE SIGNING FOR THE DURATION OF THE PROJECT IS SHOWN IN THESE SHEETS. ADDITIONAL ADVANCE SIGNING FOR SHORT TERM AND OVERNIGHT WORK INCLUDING OVERLAY, ALIGNMENT SHIFTS, MEDIAN WORK, ETC. MAY REQUIRE SIGN PLACEMENT EARLIER THAN THE ROAD WORK AHEAD SIGNS.

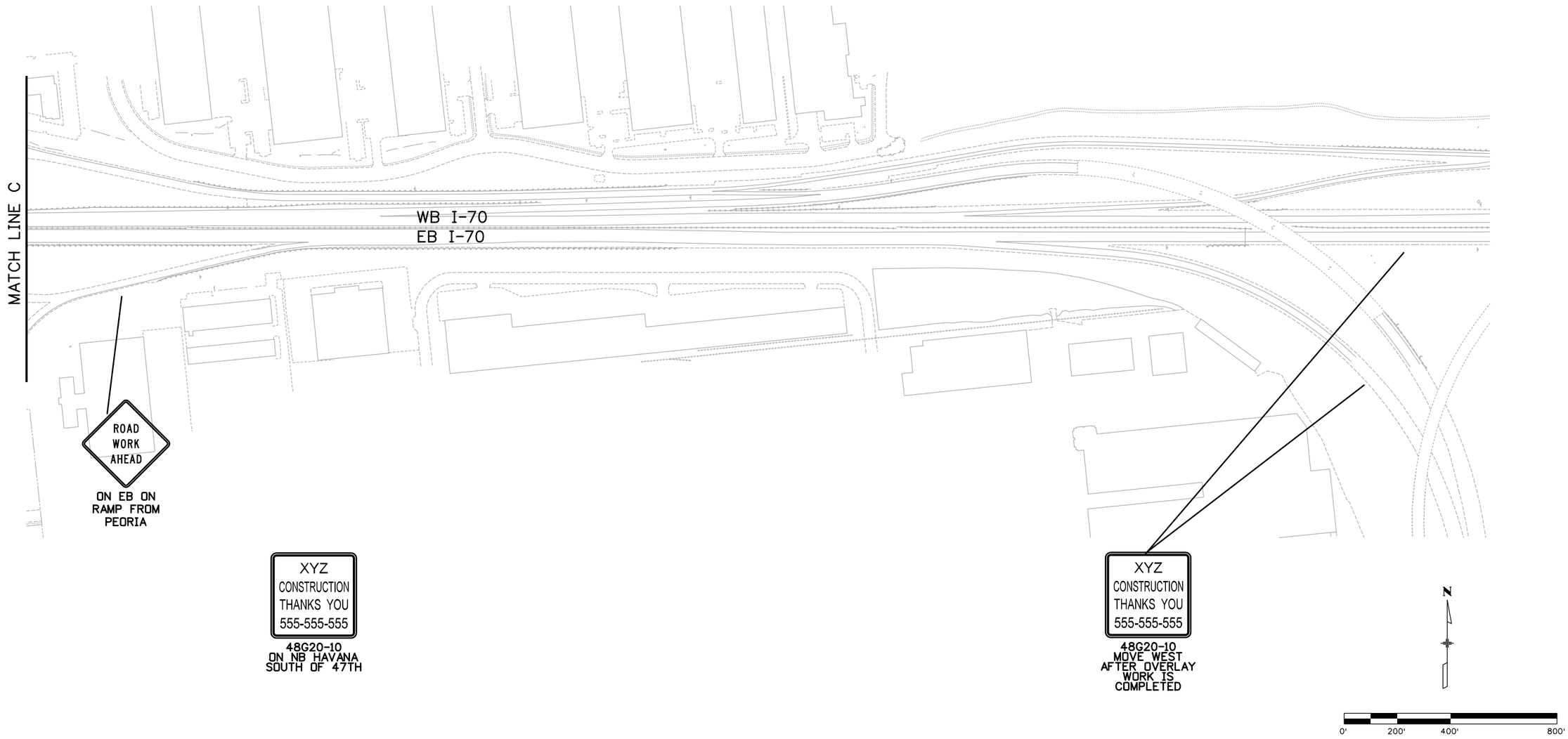

RFC02 JUNE, 2015 (REVIEW)

bob.harr 12:02:38 PM P:\13033540B - I-70 over Havana DB\19339\Traffic_ITS\Drawings\19339_AdvCon-Overall.dgn

Print Date: 6/17/2015	Sheet Revisions	Colorado Department of Transportation	As Constructed
File Name: 19339_AdvCon-Overall.dgn	Date: / Comments / Init.	4670 N. Holly, Denver, CO 80216, Phone: 303-398-6767 FAX: 303-398-6781	No Revisions:
Horiz. Scale: 1:400 Vert. Scale: As Noted		Region 1 KK	Revised:
LAWRENCE TSIOUVARAS SIMMONS HOLDERNESS CONSULTING ENGINEERS			Void:

I-70 OVER HAVANA STREET DESIGN-BUILD
LONG TERM
ADVANCE CONSTRUCTION SIGNING

Designer: D. WOOLFALL
Detailer: D. WOOLFALL
Structure Numbers
Sheet Subset: PHASE
Subset Sheets: 8 of 29

Project No./Code
FBR 0704-230
19339
Sheet Number 183

LEGEND

- WORK AREA THIS PHASE
- STRUCTURE CONSTRUCTION THIS PHASE
- ESTIMATED PAVING RUNS THIS PHASE
- TEMPORARY CONCRETE BARRIER
- SAND-FILLED BARREL IMPACT ATTENUATOR, 55MPH DESIGN UNLESS NOTED

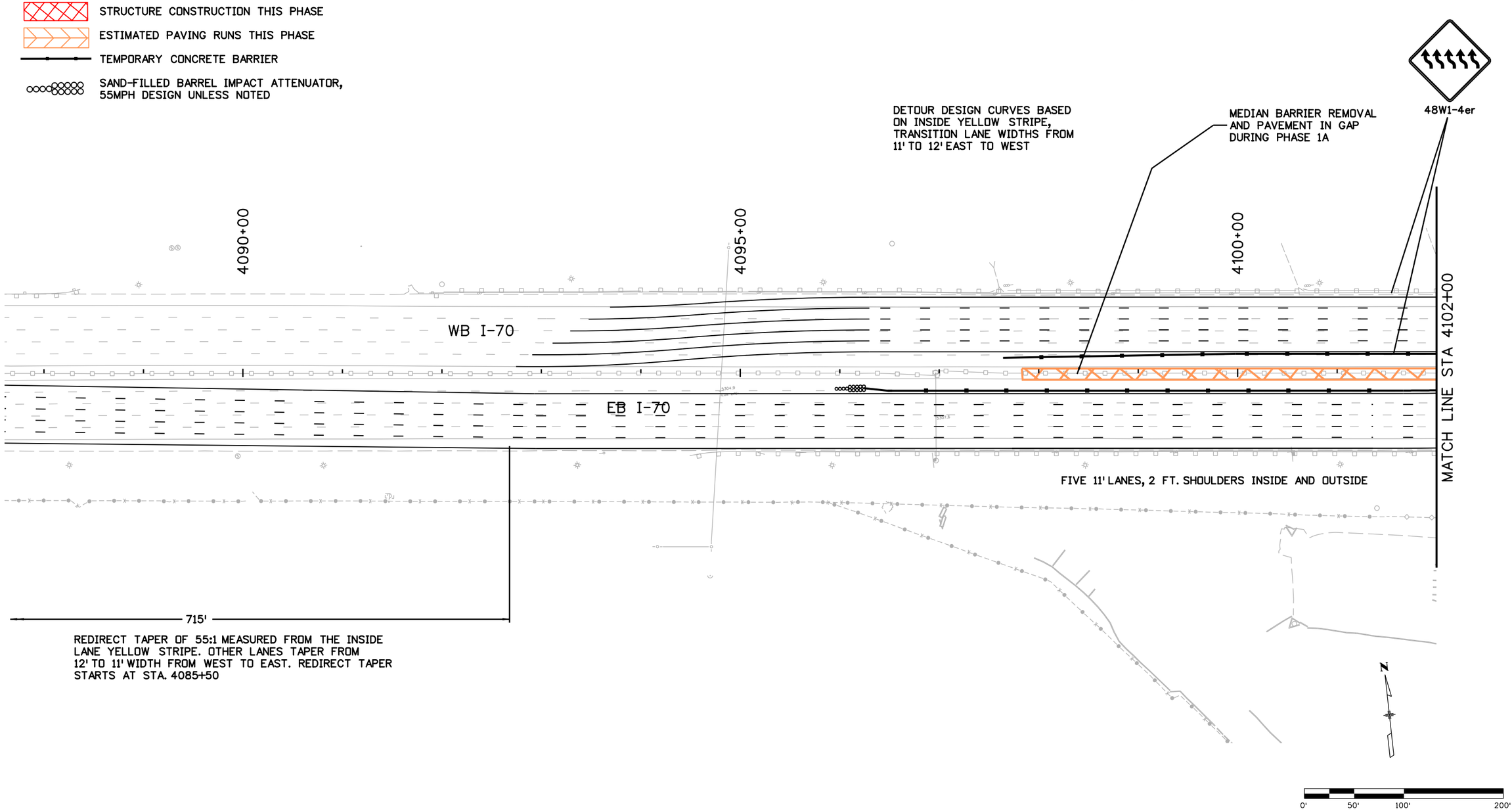

RFC02 JUNE, 2015 (REVIEW)

bob.harr 12:02:43 PM P:\13033540B - I-70 over Havana DB\19339\Traffic_ITS\Drawings\19339_Phasing.dgn

Print Date: 6/17/2015	Sheet Revisions	Colorado Department of Transportation	As Constructed
File Name: 19339_Phasing.dgn	Date: / Comments / Init.	4670 N. Holly, Denver, CO 80216, Phone: 303-398-6767 FAX: 303-398-6781	No Revisions:
Horiz. Scale: 1:100 Vert. Scale: As Noted		Region 1 KK	Revised:
LAWRENCE / TSIOUVARAS SIMMONS HOLDERNESS CONSULTING ENGINEERS			Void:

I-70 OVER HAVANA STREET DESIGN-BUILD PHASE 1A CONSTRUCTION PHASING			Project No./Code
Designer: D. WOOLFALL	Structure Numbers		FBR 0704-230
Detailer: D. WOOLFALL			19339
Sheet Subset: PHASE	Subset Sheets: 9 of 29		Sheet Number 184

LEGEND

- WORK AREA THIS PHASE
- STRUCTURE CONSTRUCTION THIS PHASE
- ESTIMATED PAVING RUNS THIS PHASE
- TEMPORARY CONCRETE BARRIER
- SAND-FILLED BARREL IMPACT ATTENUATOR, 55MPH DESIGN UNLESS NOTED

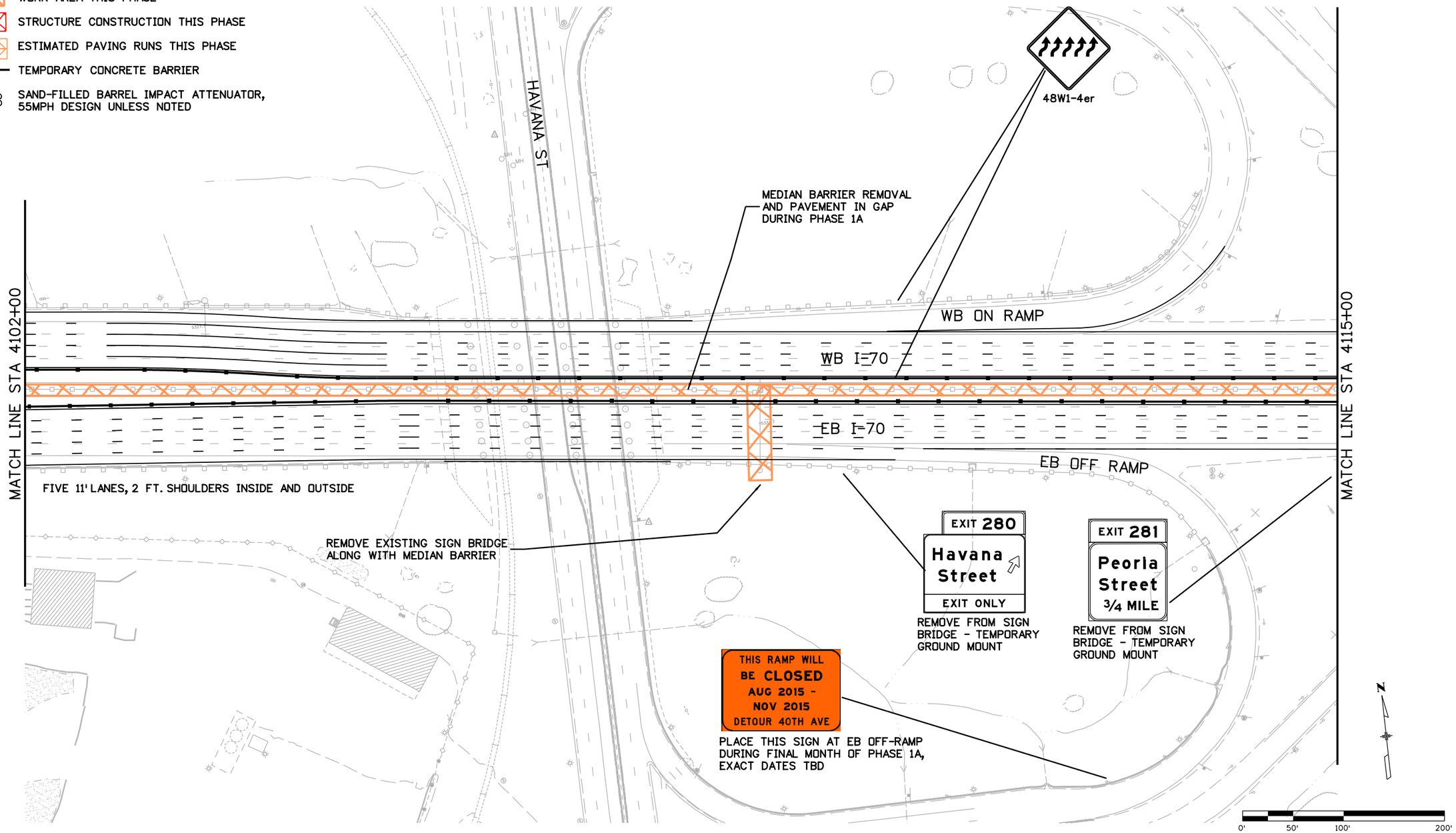

RFC02 JUNE, 2015 (REVIEW)

bob.harr 12:02:47 PM P:\13033540B - I-70 over Havana DB\19339\Traffic_ITS\Drawings\19339_Phasing.dgn

Print Date: 6/17/2015	Sheet Revisions	Colorado Department of Transportation	As Constructed
File Name: 19339_Phasing.dgn	Date: / Comments / Init.	4670 N. Holly, Denver, CO 80216, Phone: 303-398-6767 FAX: 303-398-6781	No Revisions:
Horiz. Scale: 1:100 Vert. Scale: As Noted		Region 1 KK	Revised:
LAWRENCE / TSIOUVARAS SIMMONS HOLDERNESS CONSULTING ENGINEERS			Void:

I-70 OVER HAVANA STREET DESIGN-BUILD
PHASE 1A
CONSTRUCTION PHASING

Designer: D. WOOLFALL
Detailer: D. WOOLFALL
Structure Numbers
Sheet Subset: PHASE
Subset Sheets: 10 of 29

Project No./Code
FBR 0704-230
19339
Sheet Number 185

LEGEND

- WORK AREA THIS PHASE
- STRUCTURE CONSTRUCTION THIS PHASE
- ESTIMATED PAVING RUNS THIS PHASE
- TEMPORARY CONCRETE BARRIER
- SAND-FILLED BARREL IMPACT ATTENUATOR, 55MPH DESIGN UNLESS NOTED

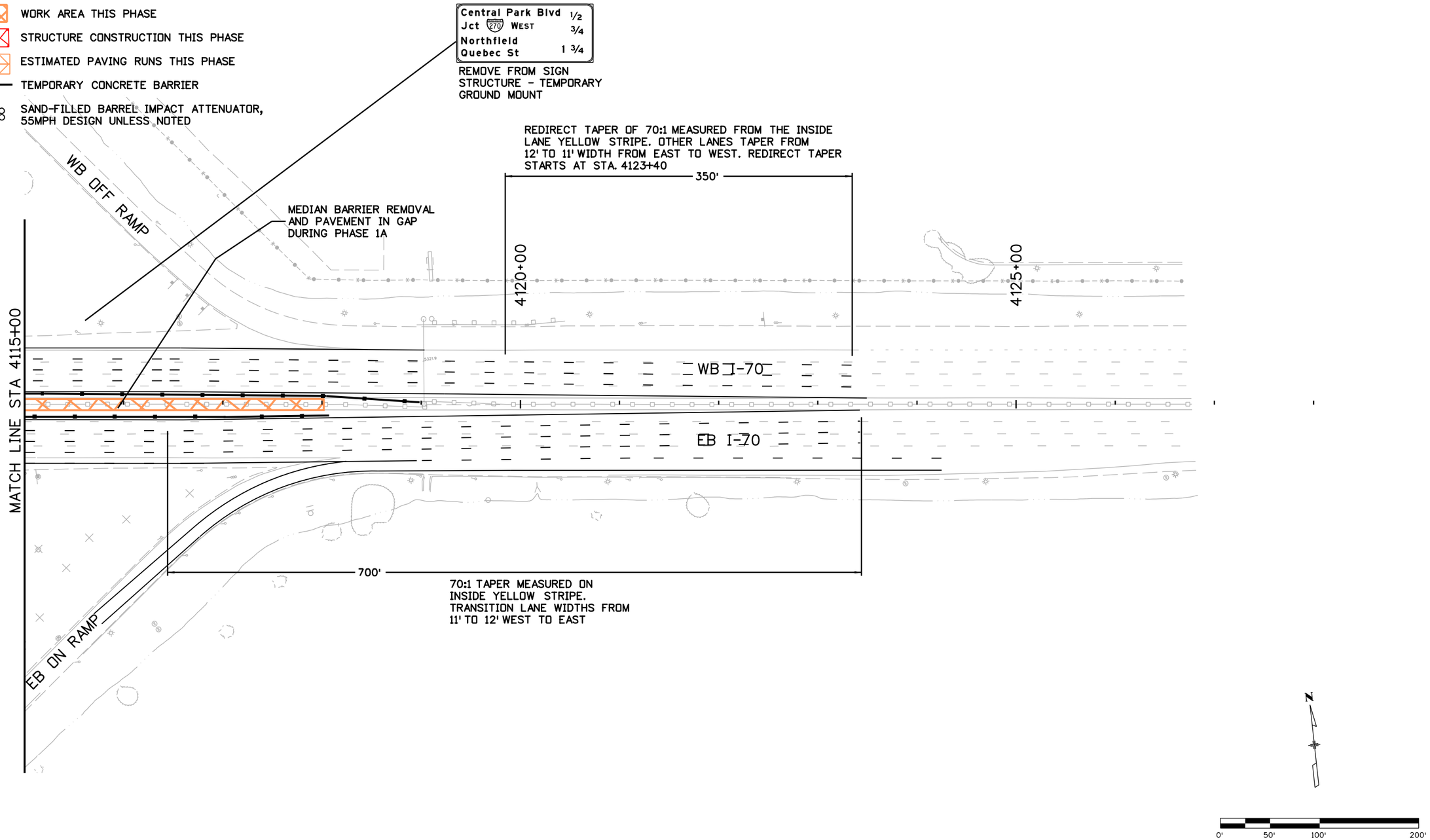

Print Date: 6/17/2015	Sheet Revisions	Colorado Department of Transportation	As Constructed
File Name: 19339_Phasing.dgn	Date: / Comments / Init.	4670 N. Holly, Denver, CO 80216, Phone: 303-398-6767 FAX: 303-398-6781	No Revisions:
Horiz. Scale: 1:100 Vert. Scale: As Noted		Region 1 KK	Revised:
TSIOUVARAS SIMMONS HOLDERNESS CONSULTING ENGINEERS			Void:

I-70 OVER HAVANA STREET DESIGN-BUILD
PHASE 1A
CONSTRUCTION PHASING

Designer: D. WOOLFALL
Detailer: D. WOOLFALL
Structure Numbers
Sheet Subset: PHASE
Subset Sheets: 11 of 29

Project No./Code
FBR 0704-230
19339
Sheet Number 186

RFC02 JUNE, 2015 (REVIEW)

bob.harr 12:02:51 PM P:\1303354DB - I-70 over Havana DB\19339\Traffic_ITS\Drawings\19339_Phasing.dgn

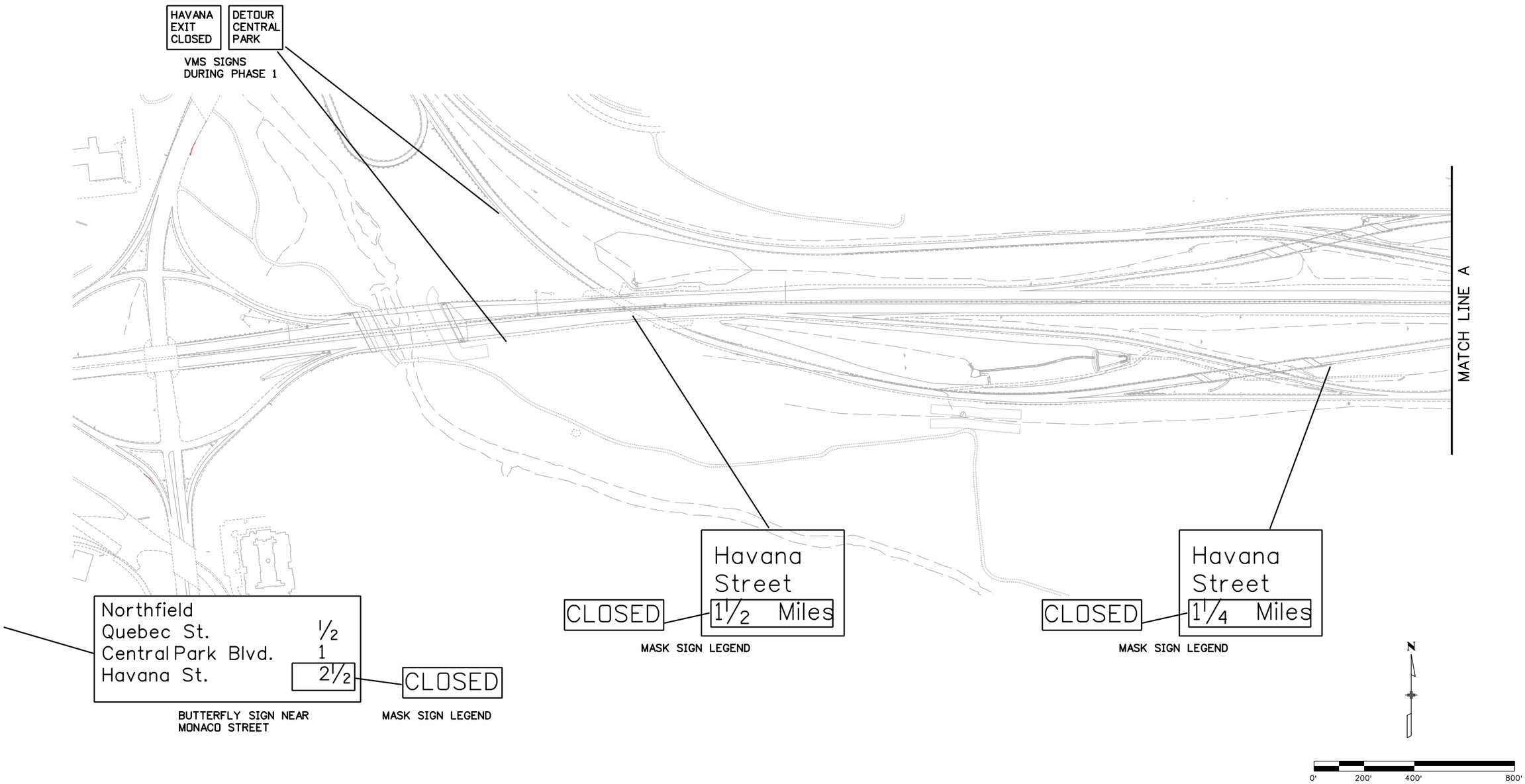

RFC02 JUNE, 2015 (REVIEW)

bob.harr 12:02:56 PM P:\13033540B - I-70 over Havana DB\19339\Traffic_ITS\Drawings\19339_AdvCon-EB-off-Closed.dgn

Print Date: 6/17/2015	Sheet Revisions	Colorado Department of Transportation	As Constructed
File Name: 19339_AdvCon-EB-off-Closed.dgn	Date: / Comments / Init.	4670 N. Holly, Denver, CO 80216, Phone: 303-398-6767 FAX: 303-398-6781	No Revisions:
Horiz. Scale: 1:400 Vert. Scale: As Noted		Region 1 KK	Revised:
LAWRENCE TSIOUVARAS SIMMONS HOLDERNESS CONSULTING ENGINEERS			Void:

I-70 OVER HAVANA STREET DESIGN-BUILD
PHASE 1B HAVANA RAMP CLOSURE
ADVANCE CONSTRUCTION SIGNING

Designer:	D. WOOLFALL	Structure Numbers	
Detailer:	D. WOOLFALL		
Sheet Subset:	PHASE	Subset Sheets:	12 of 29

Project No./Code: FBR 0704-230

19339

Sheet Number 187

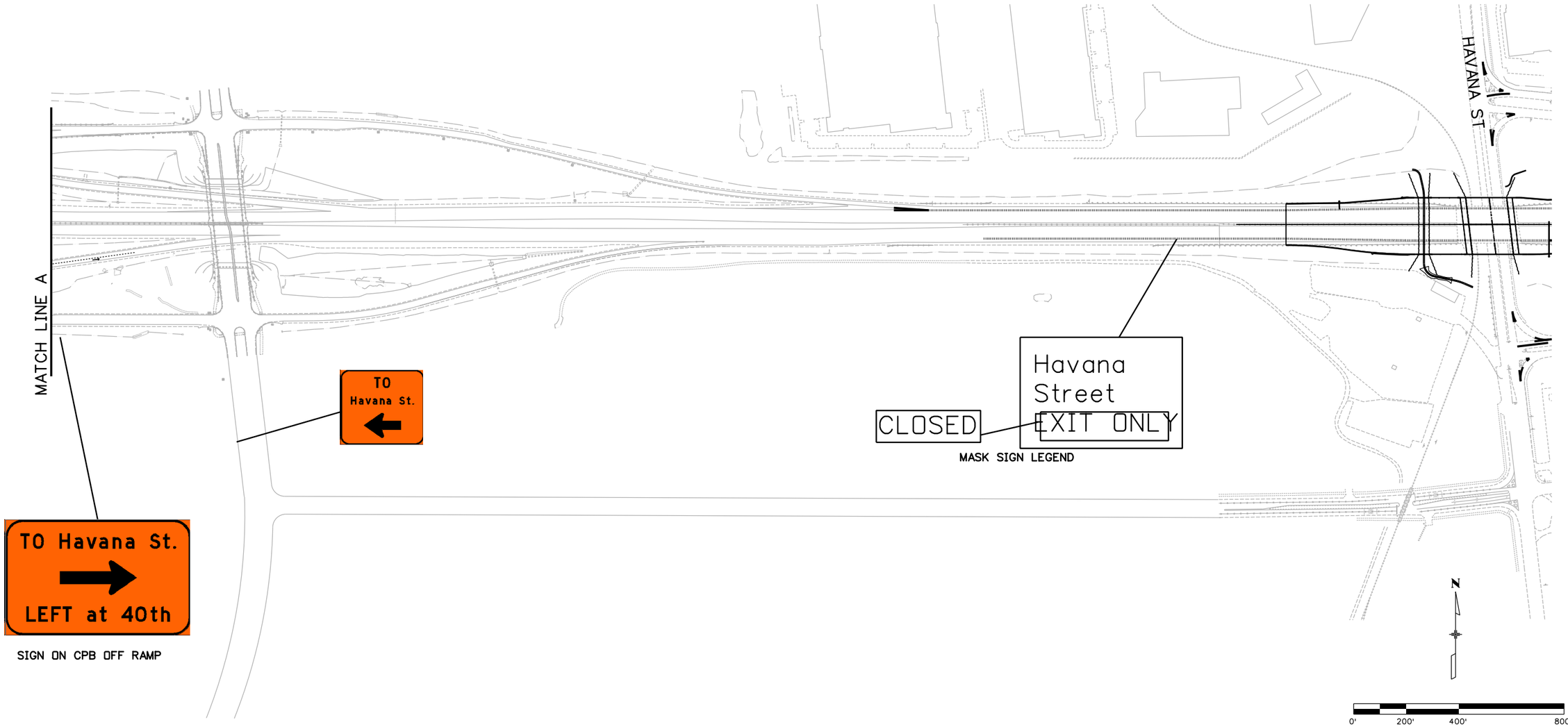

RFC02 JUNE, 2015 (REVIEW)

bob.harr 12:03:00 PM P:\130335408 - I-70 over Havana DB\19339\Traffic_ITS\Drawings\19339_AdvCon-EB-off-Closed.dgn

Print Date: 6/17/2015
File Name: 19339_AdvCon-EB-off-Closed.dgn
Horiz. Scale: 1:400 Vert. Scale: As Noted

LAWRENCE
TSIOUVARAS SIMMONS HOLDERNESS
CONSULTING ENGINEERS

Sheet Revisions		
Date:	Comments	Init.

Colorado Department of Transportation
CDOT
4670 N. Holly
Denver, CO 80216
Phone: 303-398-6767 FAX: 303-398-6781
Region 1 KK

As Constructed
No Revisions:
Revised:
Void:

I-70 OVER HAVANA STREET DESIGN-BUILD
PHASE 1B HAVANA RAMP CLOSURE
ADVANCE CONSTRUCTION SIGNING

Designer: D. WOOLFALL
Detailer: D. WOOLFALL
Structure Numbers
Sheet Subset: PHASE
Subset Sheets: 13 of 29

Project No./Code
FBR 0704-230
19339
Sheet Number 188

LEGEND

- WORK AREA THIS PHASE
- STRUCTURE CONSTRUCTION THIS PHASE
- ESTIMATED PAVING RUNS THIS PHASE
- TEMPORARY CONCRETE BARRIER
- SAND-FILLED BARREL IMPACT ATTENUATOR, 55MPH DESIGN UNLESS NOTED

NOTE: THE 30% PLANS SHOW THE DETOUR LANEAGE, GEOMETRY, AND STRIPING CONCEPT ALONG WITH CRITICAL SIGNING ONLY (CURVE WARNINGS, LANE MERGES, ETC.). RFC PLANS WILL SHOW ALL CONSTRUCTION SIGNING AND DEVICES.

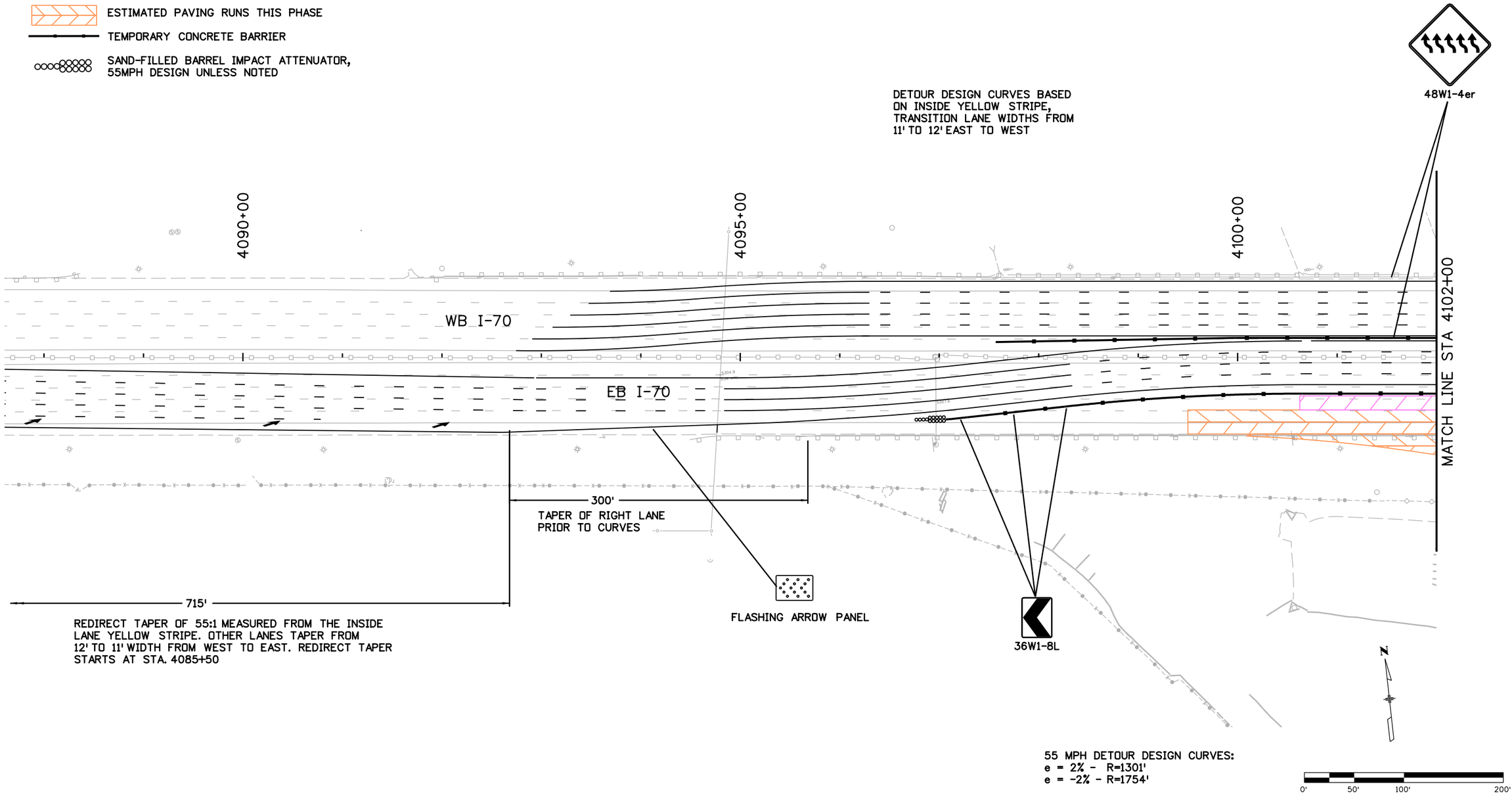

RFC02 JUNE, 2015 (REVIEW)

bob.harr 12:03:05 PM P:\13033540B - I-70 over Havana DB\19339\Traffic_ITS\Drawings\19339_Phasing.dgn

Print Date: 6/17/2015	Sheet Revisions	Colorado Department of Transportation	As Constructed
File Name: 19339_Phasing.dgn	Date: / Comments / Init.	4670 N. Holly, Denver, CO 80216, Phone: 303-398-6767 FAX: 303-398-6781	No Revisions:
Horiz. Scale: 1:100 Vert. Scale: As Noted		Region 1 KK	Revised:
LAWRENCE / TSIOUVARAS SIMMONS HOLDERNESS CONSULTING ENGINEERS			Void:

I-70 OVER HAVANA STREET DESIGN-BUILD PHASE 1B CONSTRUCTION PHASING			
Designer: D. WOOLFALL	Structure Numbers		Project No./Code
Detailer: D. WOOLFALL			FBR 0704-230
Sheet Subset: PHASE	Subset Sheets: 14 of 29		19339
			Sheet Number 189

LEGEND

- WORK AREA THIS PHASE
- STRUCTURE CONSTRUCTION THIS PHASE
- ESTIMATED PAVING RUNS THIS PHASE
- TEMPORARY CONCRETE BARRIER
- SAND-FILLED BARREL IMPACT ATTENUATOR, 55MPH DESIGN UNLESS NOTED

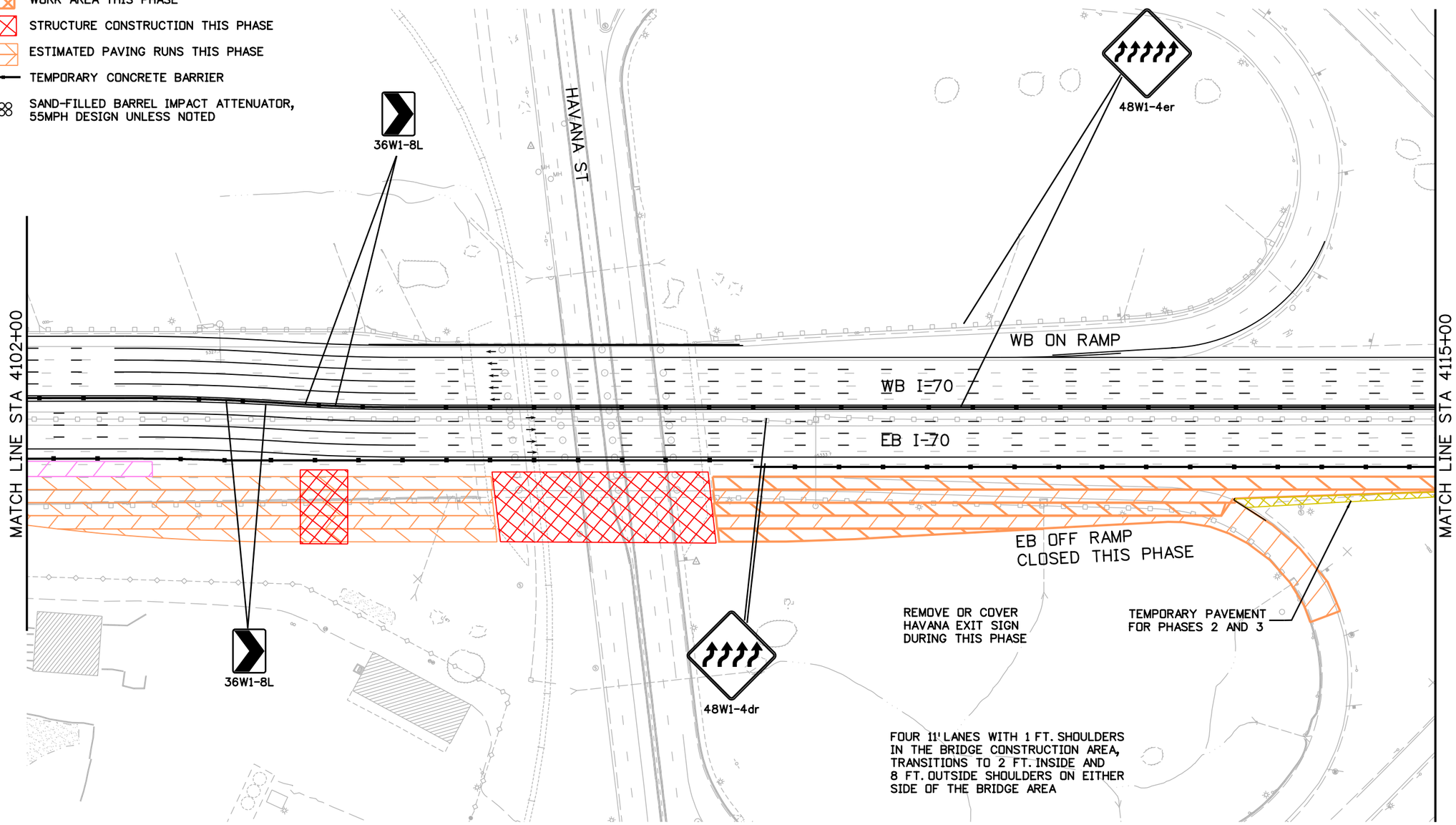

RFC02 JUNE, 2015 (REVIEW)

bob.harr 12:03:09 PM P:\13033540B - I-70 over Havana DB\19339\Traffic_ITS\Drawings\19339_Phasing.dgn

Print Date: 6/17/2015	Sheet Revisions	Colorado Department of Transportation	As Constructed
File Name: 19339_Phasing.dgn	Date: / Comments / Init.	4670 N. Holly, Denver, CO 80216, Phone: 303-398-6767 FAX: 303-398-6781	No Revisions:
Horiz. Scale: 1:100 Vert. Scale: As Noted		Region 1 KK	Revised:
TSIOUVARAS SIMMONS HOLDERNESS CONSULTING ENGINEERS			Void:

I-70 OVER HAVANA STREET DESIGN-BUILD PHASE 1B CONSTRUCTION PHASING			
Designer: D. WOOLFALL	Structure Numbers		
Detailer: D. WOOLFALL			
Sheet Subset: PHASE	Subset Sheets: 15 of 29		

Project No./Code
FBR 0704-230
19339
Sheet Number 190

LEGEND

- WORK AREA THIS PHASE
- STRUCTURE CONSTRUCTION THIS PHASE
- ESTIMATED PAVING RUNS THIS PHASE
- TEMPORARY CONCRETE BARRIER
- SAND-FILLED BARREL IMPACT ATTENUATOR, 55MPH DESIGN UNLESS NOTED

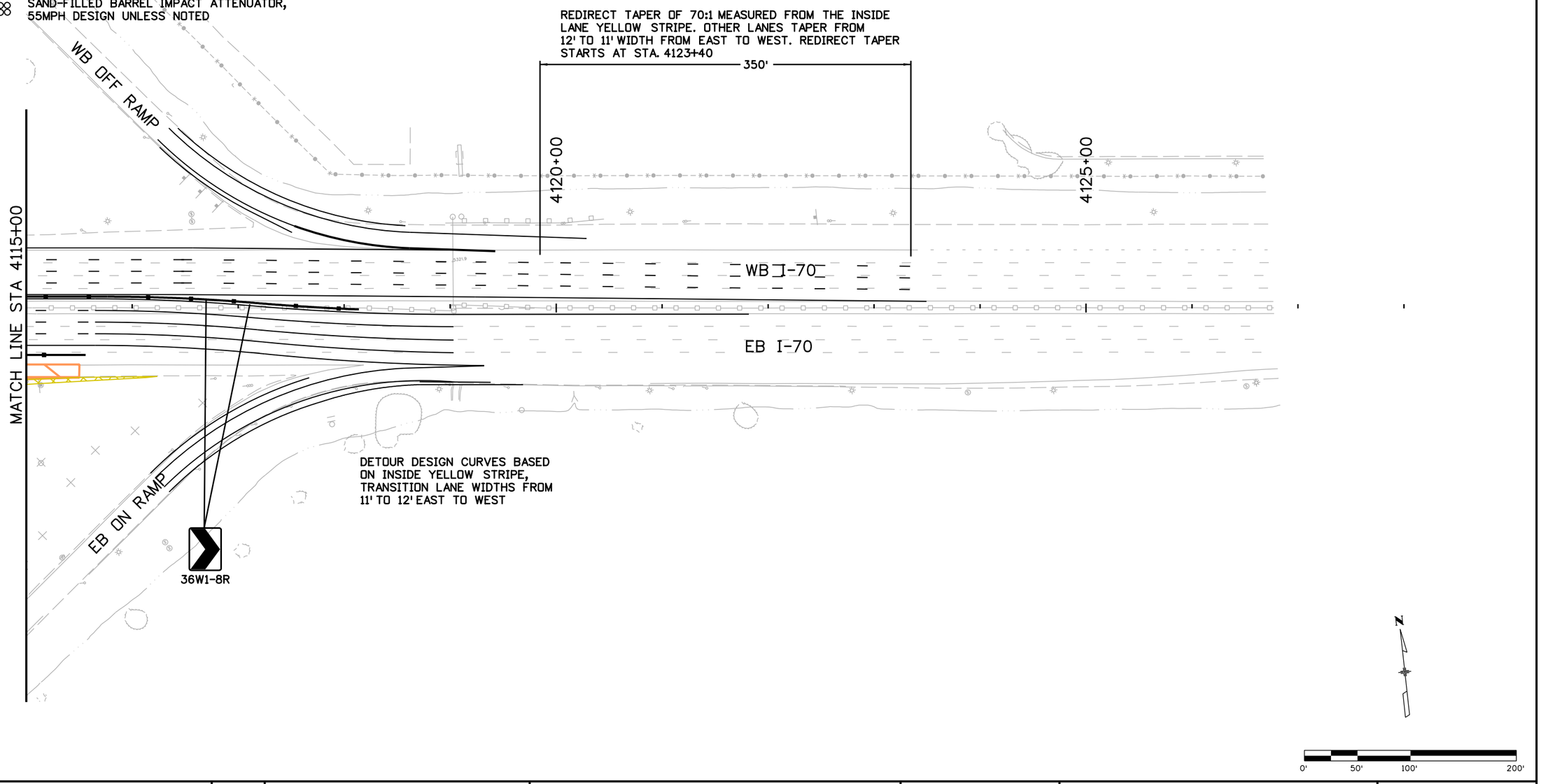

RFC02 JUNE, 2015 (REVIEW)

bob.harr 12:03:12 PM P:\1303354DB - I-70 over Havana DB\19339\Traffic_ITS\Drawings\19339_Phasing.dgn

Print Date: 6/17/2015	Sheet Revisions	Colorado Department of Transportation	As Constructed
File Name: 19339_Phasing.dgn	Date: / Comments / Init.	4670 N. Holly, Denver, CO 80216, Phone: 303-398-6767 FAX: 303-398-6781	No Revisions:
Horiz. Scale: 1:100 Vert. Scale: As Noted		Region 1 KK	Revised:
LAWRENCE TSIOUVARAS SIMMONS HOLDERNESS CONSULTING ENGINEERS			Void:

I-70 OVER HAVANA STREET DESIGN-BUILD
PHASE 1B
CONSTRUCTION PHASING

Designer:	D. WOOLFALL	Structure Numbers	
Detailer:	D. WOOLFALL		
Sheet Subset:	PHASE	Subset Sheets:	16 of 29

Project No./Code
FBR 0704-230
19339
Sheet Number 191

LEGEND

- WORK AREA THIS PHASE
- STRUCTURE CONSTRUCTION THIS PHASE
- ESTIMATED PAVING RUNS THIS PHASE
- TEMPORARY CONCRETE BARRIER
- SAND-FILLED BARREL IMPACT ATTENUATOR, 55MPH DESIGN UNLESS NOTED

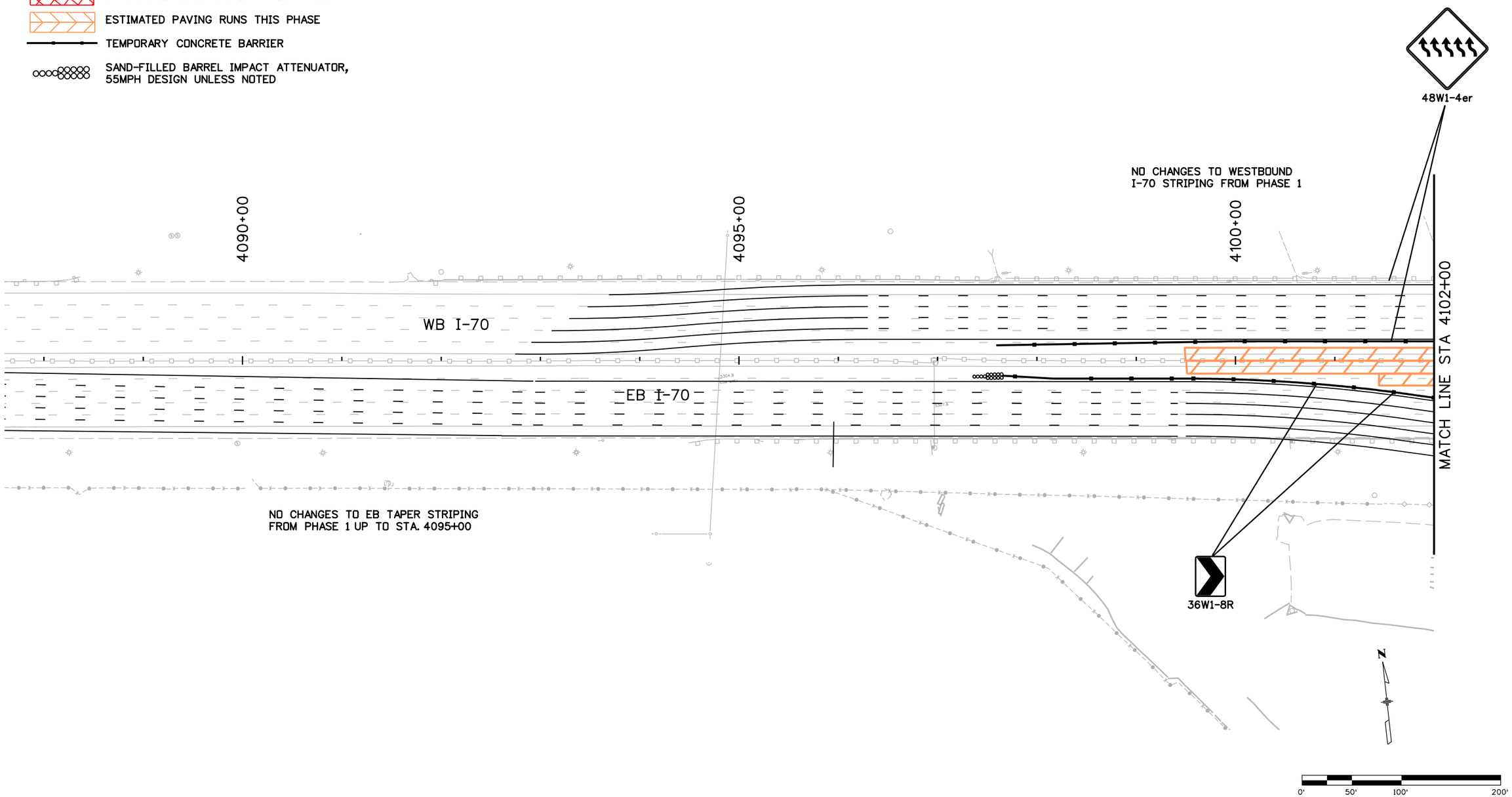

RFC02 JUNE, 2015 (REVIEW)

bob.harr 12:03:16 PM P:\13033540B - I-70 over Havana DB\19339\Traffic_ITS\Drawings\19339_Phasing.dgn

Print Date: 6/17/2015	Sheet Revisions	Colorado Department of Transportation	As Constructed
File Name: 19339_Phasing.dgn	Date: / Comments / Init.	4670 N. Holly, Denver, CO 80216, Phone: 303-398-6767 FAX: 303-398-6781	No Revisions:
Horiz. Scale: 1:100 Vert. Scale: As Noted		Region 1 KK	Revised:
LAWRENCE / TSIOUVARAS SIMMONS HOLDERNESS CONSULTING ENGINEERS			Void:

I-70 OVER HAVANA STREET DESIGN-BUILD PHASE 2 CONSTRUCTION PHASING			
Designer: D. WOOLFALL	Structure Numbers		Project No./Code
Detailer: D. WOOLFALL			FBR 0704-230
Sheet Subset: PHASE	Subset Sheets: 17 of 29		19339
			Sheet Number 192

LEGEND

- WORK AREA THIS PHASE
- STRUCTURE CONSTRUCTION THIS PHASE
- ESTIMATED PAVING RUNS THIS PHASE
- TEMPORARY CONCRETE BARRIER
- SAND-FILLED BARREL IMPACT ATTENUATOR, 55MPH DESIGN UNLESS NOTED

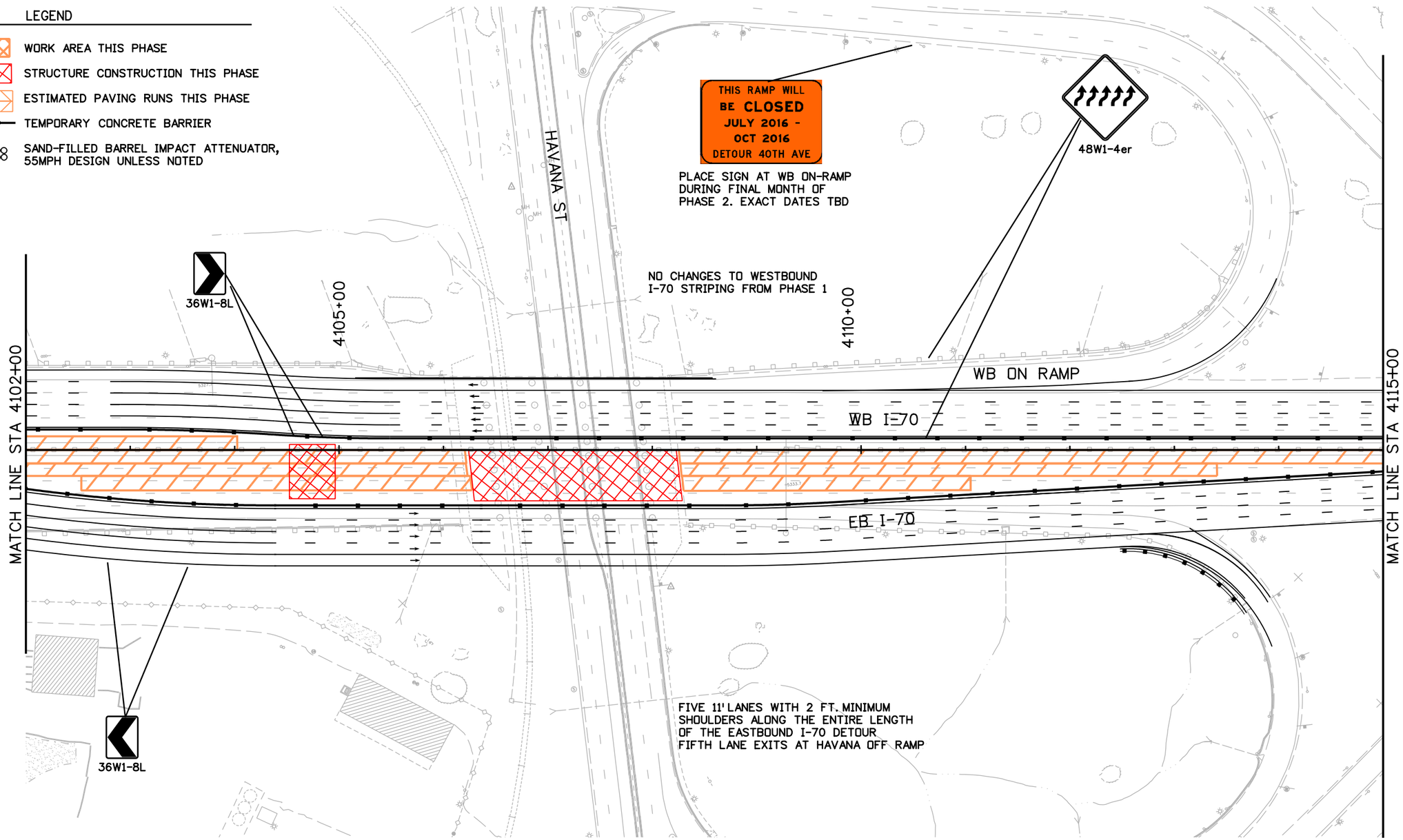

0' 50' 100' 200'

RFC02 JUNE, 2015 (REVIEW)

bob.harr 12:03:20 PM P:\1303354DB - I-70 over Havana DB\19339\Traffic_ITS\Drawings\19339_Phasing.dgn

Print Date: 6/17/2015
File Name: 19339_Phasing.dgn
Horiz. Scale: 1:100 Vert. Scale: As Noted

LAWRENCE
TSIOUVARAS SIMMONS HOLDERNESS
CONSULTING ENGINEERS

Sheet Revisions		
Date:	Comments	Init.

Colorado Department of Transportation
4670 N. Holly
Denver, CO 80216
Phone: 303-398-6767 FAX: 303-398-6781
Region 1 KK

As Constructed
No Revisions:
Revised:
Void:

I-70 OVER HAVANA STREET DESIGN-BUILD
PHASE 2
CONSTRUCTION PHASING

Designer: D. WOOLFALL
Detailer: D. WOOLFALL
Sheet Subset: PHASE
Structure Numbers
Subset Sheets: 18 of 29

Project No./Code
FBR 0704-230
19339
Sheet Number 193

LEGEND

- WORK AREA THIS PHASE
- STRUCTURE CONSTRUCTION THIS PHASE
- ESTIMATED PAVING RUNS THIS PHASE
- TEMPORARY CONCRETE BARRIER
- SAND-FILLED BARREL IMPACT ATTENUATOR, 55MPH DESIGN UNLESS NOTED

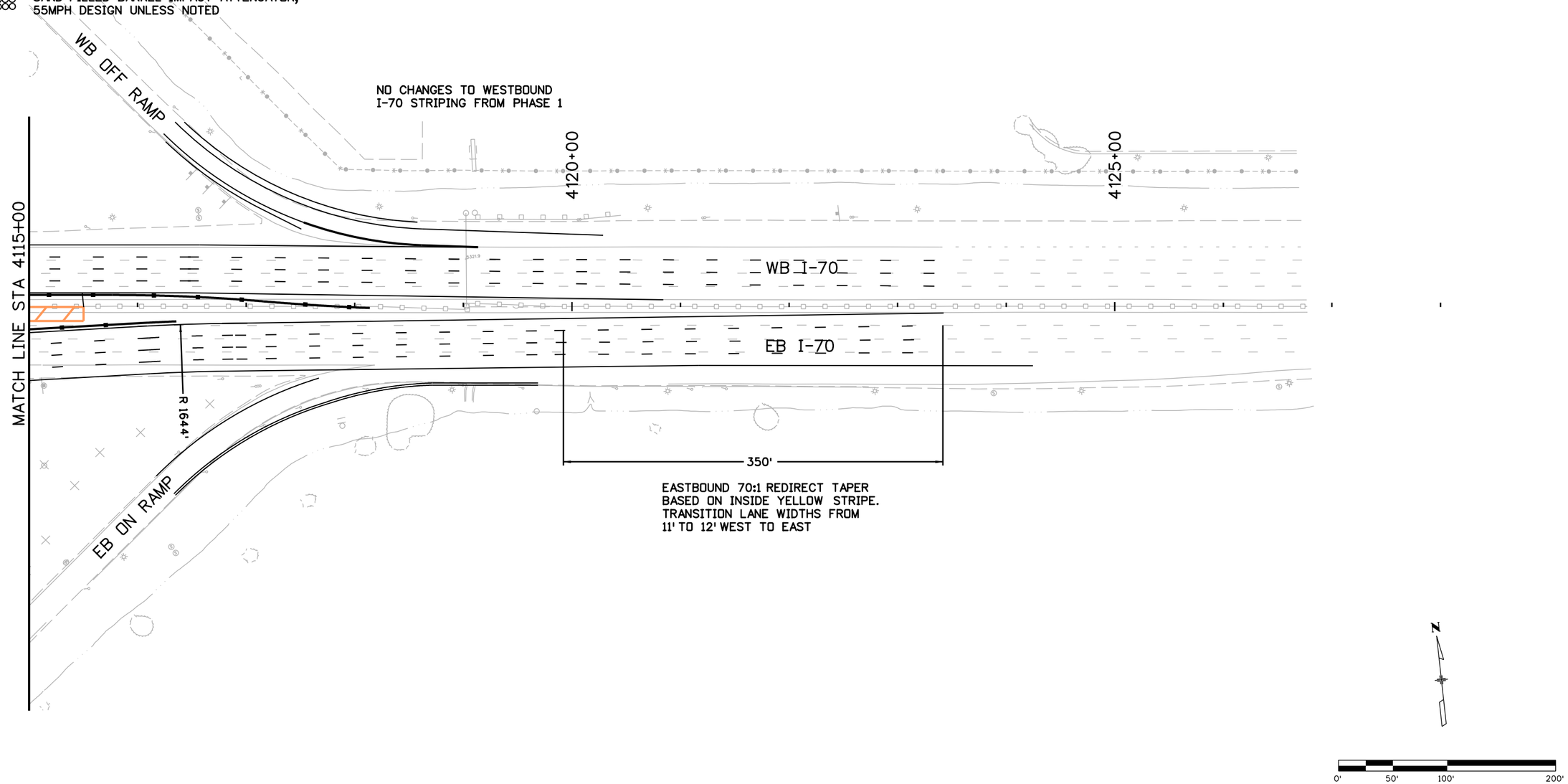

RFC02 JUNE, 2015 (REVIEW)

bob.harr 12:03:24 PM P:\13033540B - I-70 over Havana DB\19339\Traffic_ITS\Drawings\19339_Phasing.dgn

Print Date: 6/17/2015	Sheet Revisions	Colorado Department of Transportation	As Constructed
File Name: 19339_Phasing.dgn	Date: / Comments / Init.	4670 N. Holly, Denver, CO 80216, Phone: 303-398-6767 FAX: 303-398-6781	No Revisions:
Horiz. Scale: 1:100 Vert. Scale: As Noted		Region 1 KK	Revised:
TSIOUVARAS SIMMONS HOLDERNESS CONSULTING ENGINEERS			Void:

I-70 OVER HAVANA STREET DESIGN-BUILD
PHASE 2
CONSTRUCTION PHASING

Designer:	D. WOOLFALL	Structure Numbers	
Detailer:	D. WOOLFALL		
Sheet Subset:	PHASE	Subset Sheets:	19 of 29

Project No./Code: FBR 0704-230

19339

Sheet Number 194

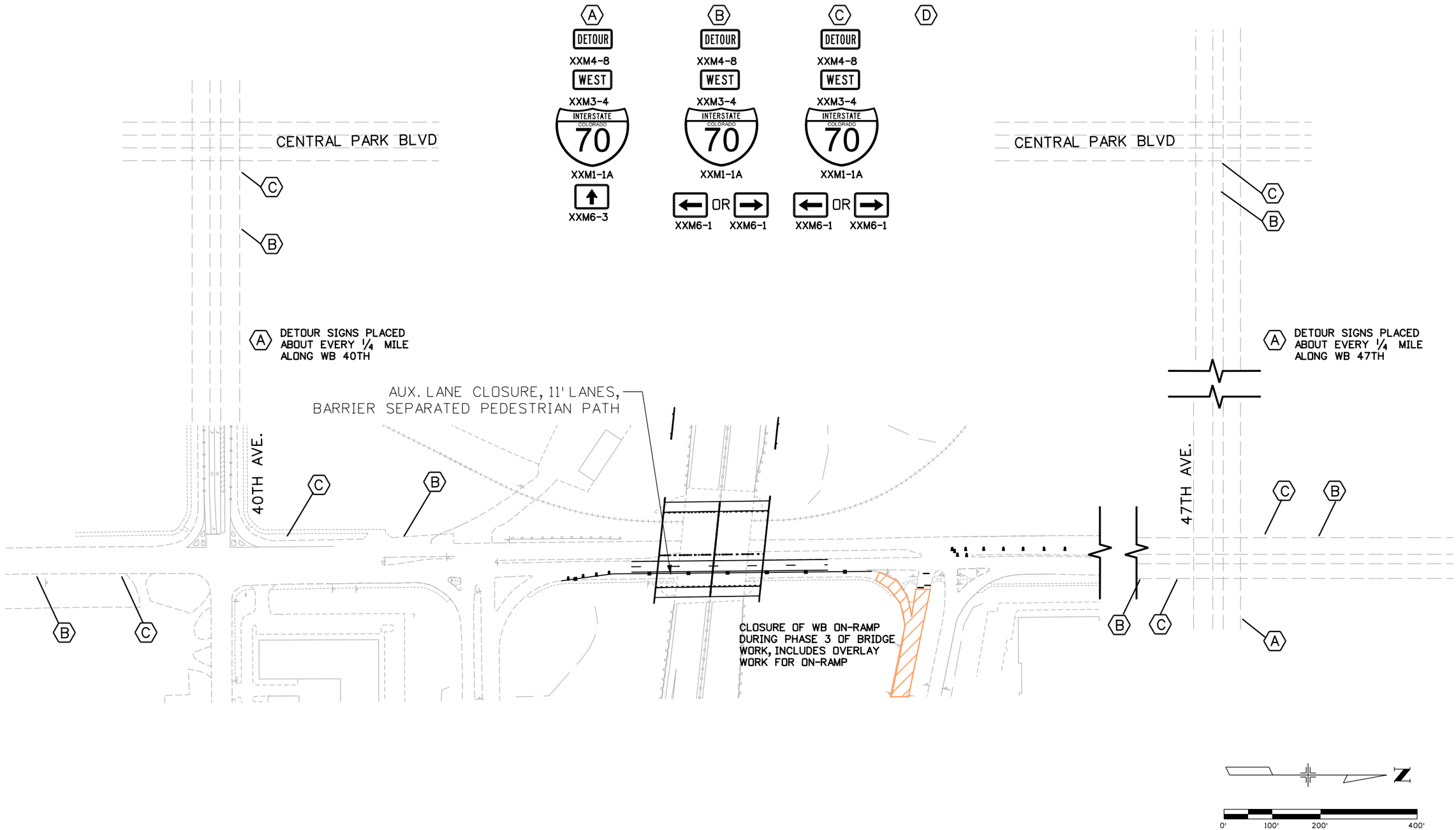

RFC02 JUNE, 2015 (REVIEW)

bob.harr 12:03:28 PM P:\13033540B - I-70 over Havana DB\19339\Traffic_ITS\Drawings\19339_AdvCon-WB-on-Closed.dgn

Print Date: 6/17/2015	Sheet Revisions	Colorado Department of Transportation	As Constructed
File Name: 19339_AdvCon-WB-on-Closed.dgn	Date: / Comments / Init.	4670 N. Holly, Denver, CO 80216, Phone: 303-398-6767 FAX: 303-398-6781	No Revisions:
Horiz. Scale: 1:200 Vert. Scale: As Noted		Region 1 KK	Revised:
LAWRENCE TSIOUVARAS SIMMONS HOLDERNESS CONSULTING ENGINEERS			Void:

I-70 OVER HAVANA STREET DESIGN-BUILD
PHASE 1 HAVANA RAMP CLOSURE
ADVANCE CONSTRUCTION SIGNING

Designer:	D. WOOLFALL	Structure Numbers	
Detailer:	D. WOOLFALL		
Sheet Subset:	PHASE	Subset Sheets:	20 of 29

Project No./Code	
FBR 0704-230	
19339	
Sheet Number	195

LEGEND

- WORK AREA THIS PHASE
- STRUCTURE CONSTRUCTION THIS PHASE
- ESTIMATED PAVING RUNS THIS PHASE
- TEMPORARY CONCRETE BARRIER
- SAND-FILLED BARREL IMPACT ATTENUATOR, 55MPH DESIGN UNLESS NOTED

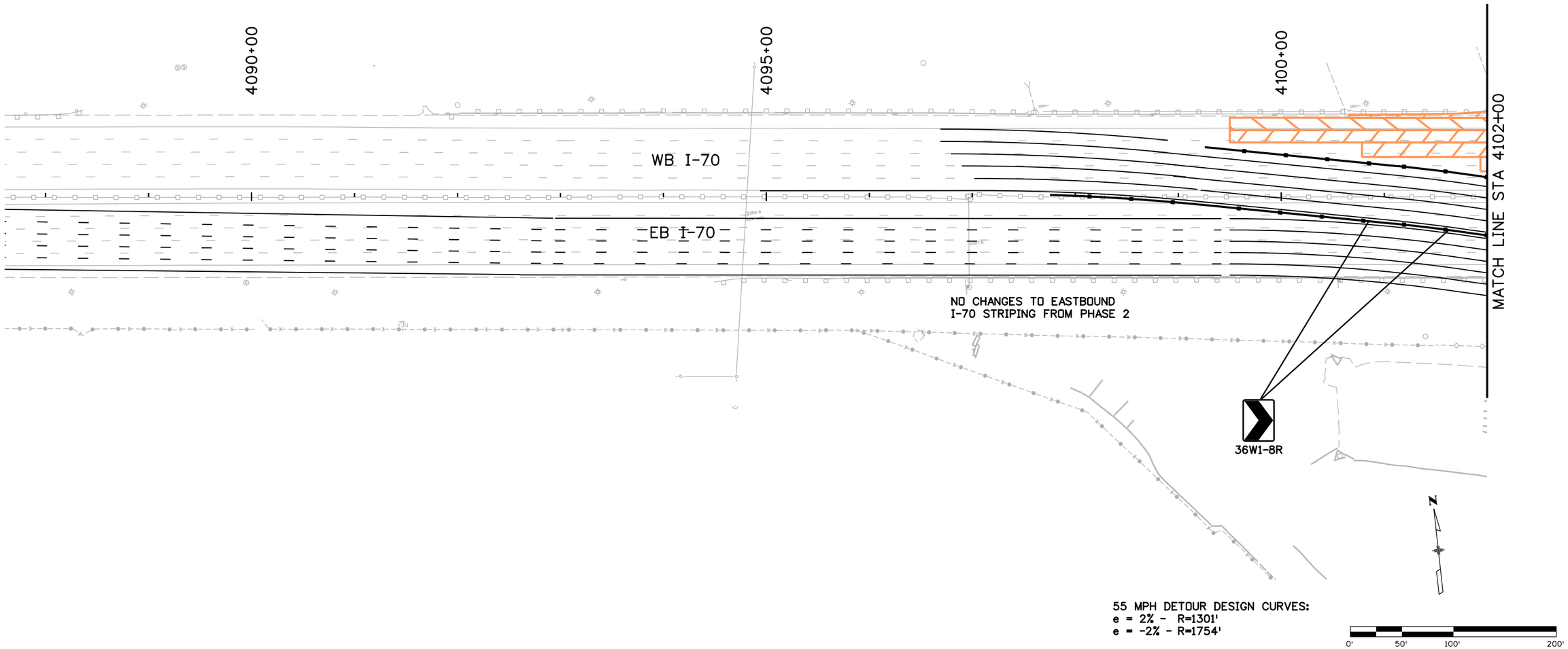

RFC02 JUNE, 2015 (REVIEW)

bob.harr 12:03:33 PM P:\13033540B - I-70 over Havana DB\19339\Traffic_ITS\Drawings\19339_Phasing.dgn

Print Date: 6/17/2015	Sheet Revisions	Colorado Department of Transportation	As Constructed
File Name: 19339_Phasing.dgn	Date: / Comments / Init.	4670 N. Holly, Denver, CO 80216, Phone: 303-398-6767 FAX: 303-398-6781	No Revisions:
Horiz. Scale: 1:100 Vert. Scale: As Noted		Region 1 KK	Revised:
TSIOUVARAS SIMMONS HOLDERNESS CONSULTING ENGINEERS			Void:

I-70 OVER HAVANA STREET DESIGN-BUILD PHASE 3 CONSTRUCTION PHASING			Project No./Code
Designer: D. WOOLFALL	Structure Numbers		FBR 0704-230
Detailer: D. WOOLFALL			19339
Sheet Subset: PHASE	Subset Sheets: 21 of 29		Sheet Number 196

LEGEND

- WORK AREA THIS PHASE
- STRUCTURE CONSTRUCTION THIS PHASE
- ESTIMATED PAVING RUNS THIS PHASE
- TEMPORARY CONCRETE BARRIER
- SAND-FILLED BARREL IMPACT ATTENUATOR, 55MPH DESIGN UNLESS NOTED

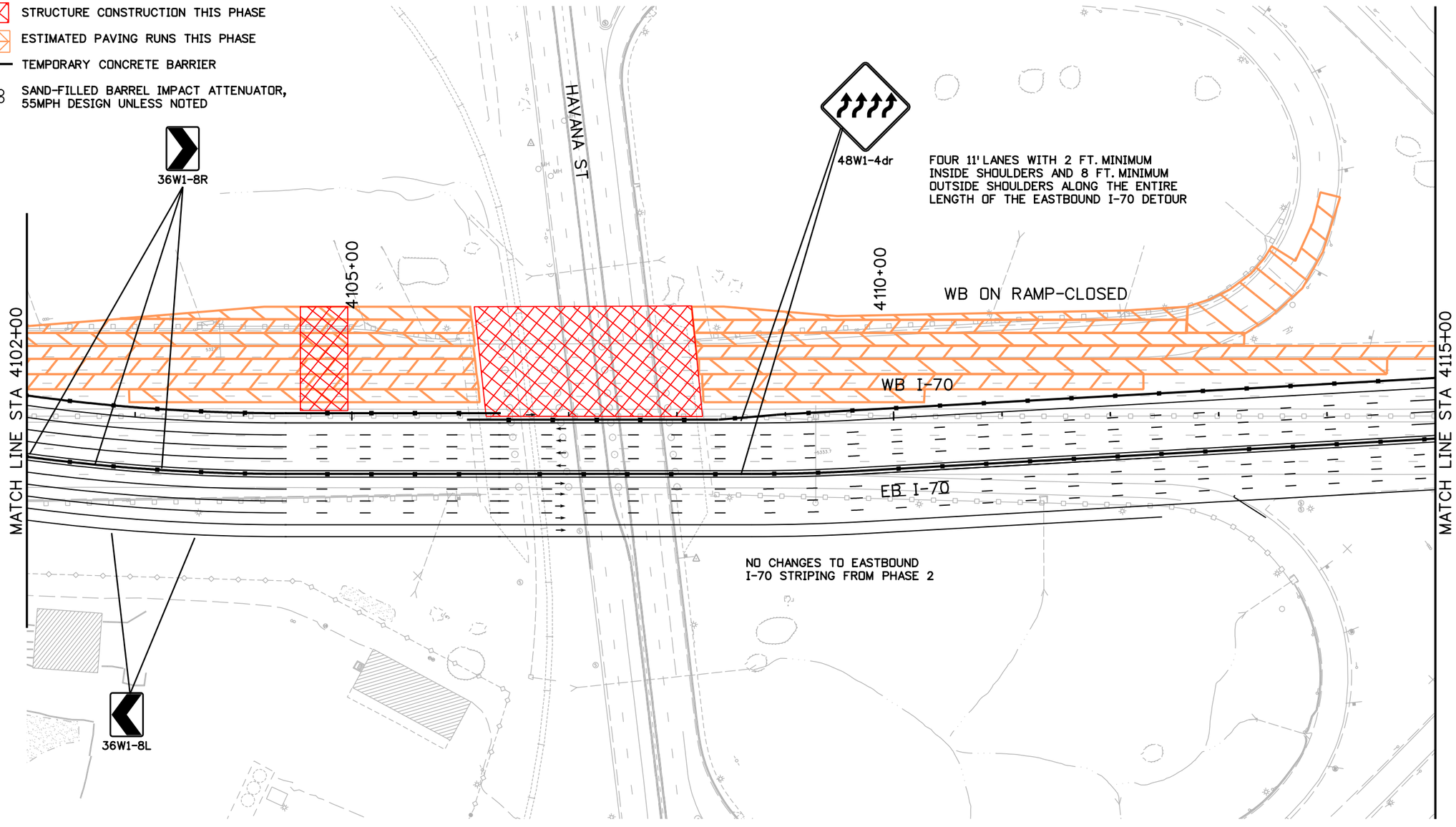

0' 50' 100' 200'

RFC02 JUNE, 2015 (REVIEW)

bob.harr 12:03:37 PM P:\13033540B - I-70 over Havana DB\19339\Traffic_ITS\Drawings\19339_Phasing.dgn

Print Date: 6/17/2015	Sheet Revisions	Colorado Department of Transportation	As Constructed
File Name: 19339_Phasing.dgn	Date: / Comments / Init.	4670 N. Holly, Denver, CO 80216, Phone: 303-398-6767 FAX: 303-398-6781	No Revisions:
Horiz. Scale: 1:100 Vert. Scale: As Noted		Region 1 KK	Revised:
LAWRENCE TSIOUVARAS SIMMONS HOLDERNESS CONSULTING ENGINEERS			Void:

I-70 OVER HAVANA STREET DESIGN-BUILD PHASE 3 CONSTRUCTION PHASING			Project No./Code
Designer: D. WOOLFALL	Structure Numbers		FBR 0704-230
Detailer: D. WOOLFALL			19339
Sheet Subset: PHASE	Subset Sheets: 22 of 29		Sheet Number 197

LEGEND

- WORK AREA THIS PHASE
- STRUCTURE CONSTRUCTION THIS PHASE
- ESTIMATED PAVING RUNS THIS PHASE
- TEMPORARY CONCRETE BARRIER
- SAND-FILLED BARREL IMPACT ATTENUATOR, 55MPH DESIGN UNLESS NOTED

LEGEND

- WORK AREA THIS PHASE
- STRUCTURE CONSTRUCTION THIS PHASE
- ESTIMATED PAVING RUNS THIS PHASE

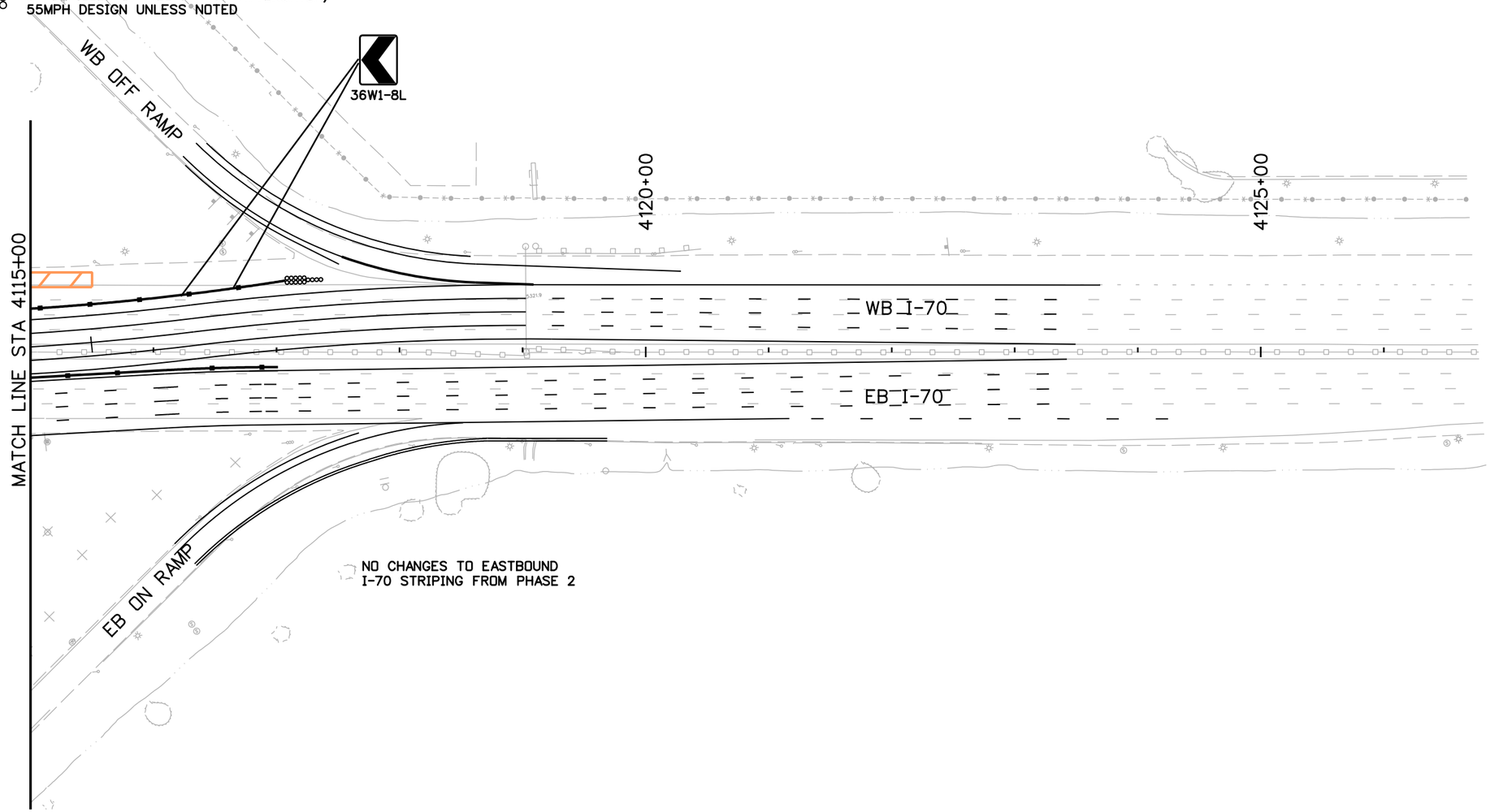

55 MPH DETOUR DESIGN CURVES:
e = 2% - R=1301'
e = -2% - R=1754'

0' 50' 100' 200'

RFC02 JUNE, 2015 (REVIEW)

bob.harr 12:03:41 PM P:\1303354DB - I-70 over Havana DB\19339\Traffic_ITS\Drawings\19339_Phasing.dgn

Print Date: 6/17/2015	Sheet Revisions	Colorado Department of Transportation	As Constructed
File Name: 19339_Phasing.dgn	Date: / Comments / Init.	4670 N. Holly, Denver, CO 80216, Phone: 303-398-6767 FAX: 303-398-6781	No Revisions:
Horiz. Scale: 1:100 Vert. Scale: As Noted		Region 1 KK	Revised:
TSIOUVARAS SIMMONS HOLDERNESS CONSULTING ENGINEERS			Void:

I-70 OVER HAVANA STREET DESIGN-BUILD PHASE 3 CONSTRUCTION PHASING			Project No./Code
Designer: D. WOOLFALL	Structure Numbers		FBR 0704-230
Detailer: D. WOOLFALL			19339
Sheet Subset: PHASE	Subset Sheets: 23 of 29		Sheet Number 198

THE SHORT-TERM EASTBOUND APPROACH SIGNING IS PRIMARILY FOR THE SHORT-TERM WORK TO SHIFT EB TRAFFIC ONTO THE NEW DETOUR ALIGNMENT DURING AN OVERNIGHT+WEEKEND CLOSURES. PORTIONS OF THIS APPROACH SIGNING MIGHT ALSO BE USED FOR SINGLE OR MULTI-LANE EASTBOUND I-70 CLOSURES.

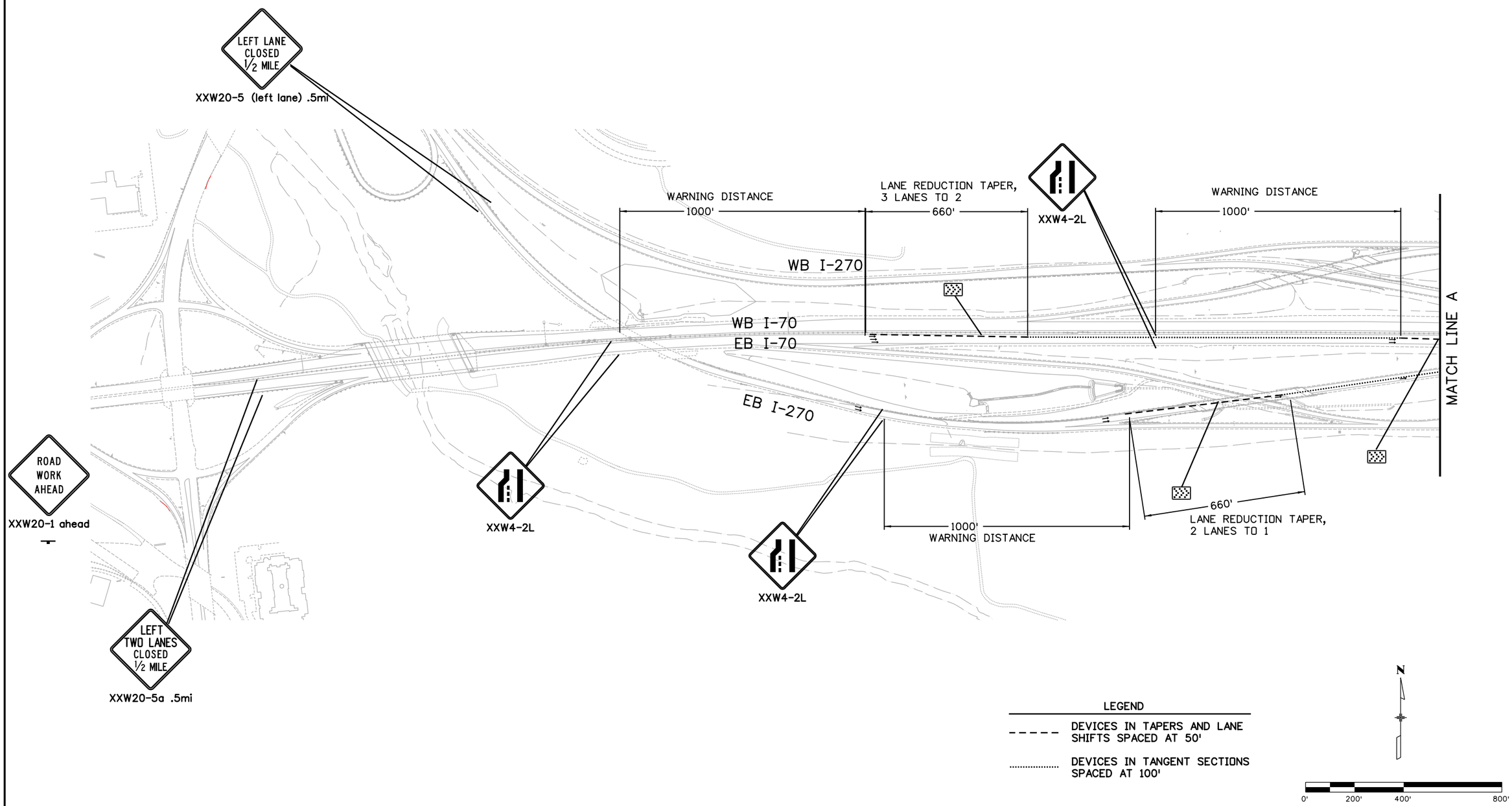

LEGEND

- - - - - DEVICES IN TAPERS AND LANE SHIFTS SPACED AT 50'

..... DEVICES IN TANGENT SECTIONS SPACED AT 100'

RFC02 JUNE, 2015 (REVIEW)

bob.harr 12:03:46 PM P:\13033540B - I-70 over Havana DB\19339\Traffic_ITS\Drawings\19339_AdvCon-PhaseShortTermEB.dgn

Print Date: 6/17/2015	Sheet Revisions	Colorado Department of Transportation	As Constructed
File Name: 19339_AdvCon-PhaseShortTermEB.dgn	Date: / Comments / Init.	4670 N. Holly, Denver, CO 80216, Phone: 303-398-6767 FAX: 303-398-6781	No Revisions:
Horiz. Scale: 1:400 Vert. Scale: As Noted		Region 1 KK	Revised:
LAWRENCE TSIOUVARAS SIMMONS HOLDERNESS CONSULTING ENGINEERS			Void:

I-70 OVER HAVANA STREET DESIGN-BUILD EASTBOUND SHORT TERM ADVANCE CONSTRUCTION SIGNING

Designer:	D. WOOLFALL	Structure Numbers	
Detailer:	D. WOOLFALL		
Sheet Subset:	PHASE	Subset Sheets:	24 of 29

Project No./Code
FBR 0704-230
19339
Sheet Number 199

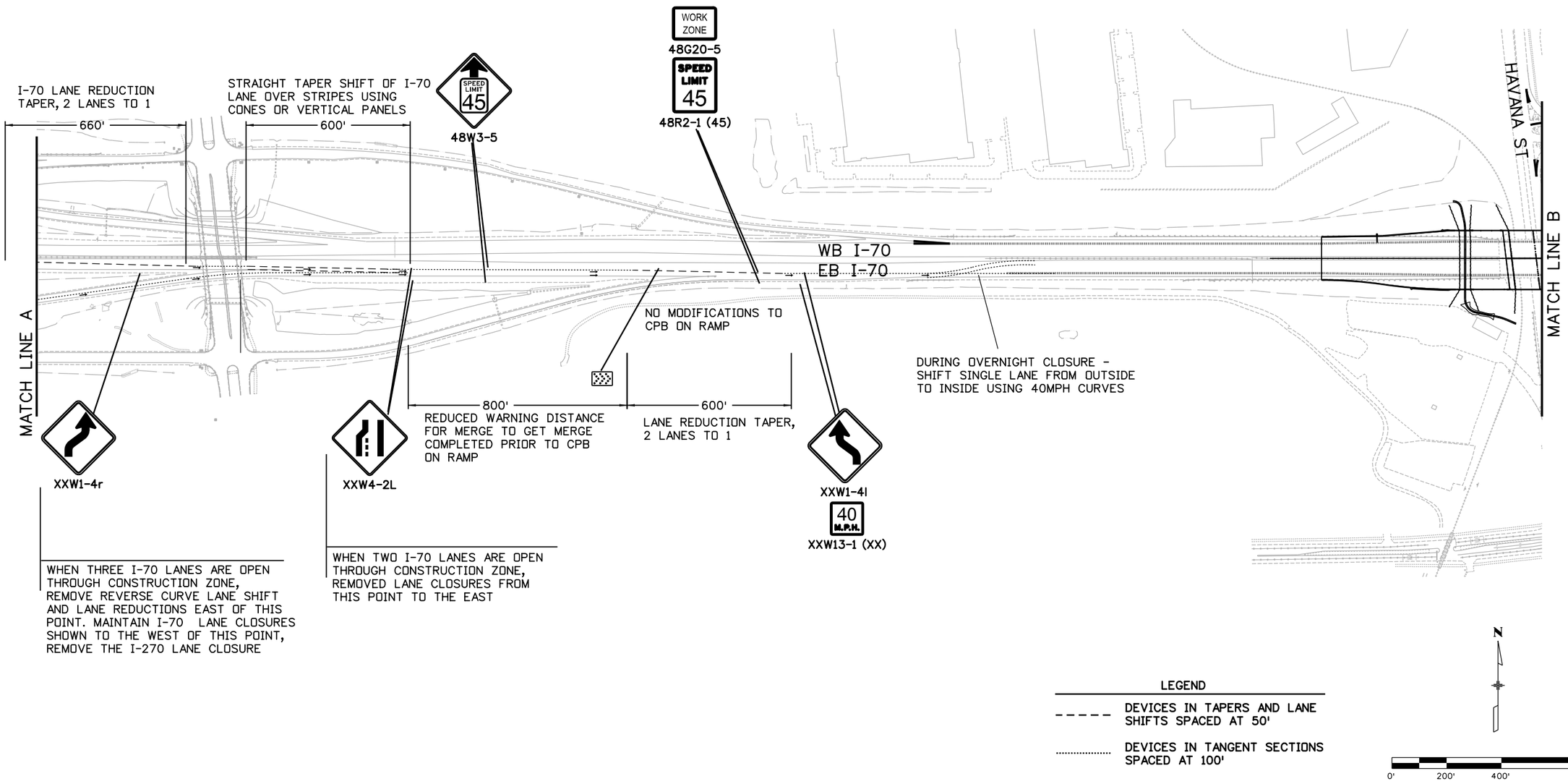

LEGEND

- - - - - DEVICES IN TAPERS AND LANE SHIFTS SPACED AT 50'

..... DEVICES IN TANGENT SECTIONS SPACED AT 100'

RFC02 JUNE, 2015 (REVIEW)

bob.harr 12:03:50 PM P:\13033540B - I-70 over Havana DB\19339\Traffic_ITS\Drawings\19339_AdvCon-PhaseShortTermEB.dgn

Print Date: 6/17/2015	Sheet Revisions	Colorado Department of Transportation	As Constructed
File Name: 19339_AdvCon-PhaseShortTermEB.dgn	Date: / Comments / Init.	4670 N. Holly, Denver, CO 80216, Phone: 303-398-6767 FAX: 303-398-6781	No Revisions:
Horiz. Scale: 1:400 Vert. Scale: As Noted		Region 1 KK	Revised:
LAWRENCE TSIOUVARAS SIMMONS HOLDERNESS CONSULTING ENGINEERS			Void:

I-70 OVER HAVANA STREET DESIGN-BUILD
EASTBOUND SHORT TERM
ADVANCE CONSTRUCTION SIGNING

Designer:	D. WOOLFALL	Structure Numbers	
Detailer:	D. WOOLFALL		
Sheet Subset:	PHASE	Subset Sheets:	25 of 29

Project No./Code
FBR 0704-230
19339
Sheet Number 200

THE SHORT-TERM WESTBOUND APPROACH SIGNING IS PRIMARILY FOR THE SHORT-TERM WORK TO SHIFT WB TRAFFIC ONTO THE NEW DETOUR ALIGNMENT DURING AN OVERNIGHT+WEEKEND CLOSURES AT THE END OF PHASE 2. PORTIONS OF THIS APPROACH SIGNING MIGHT ALSO BE USED FOR SINGLE OR MULTI-LANE WESTBOUND I-70 CLOSURES.

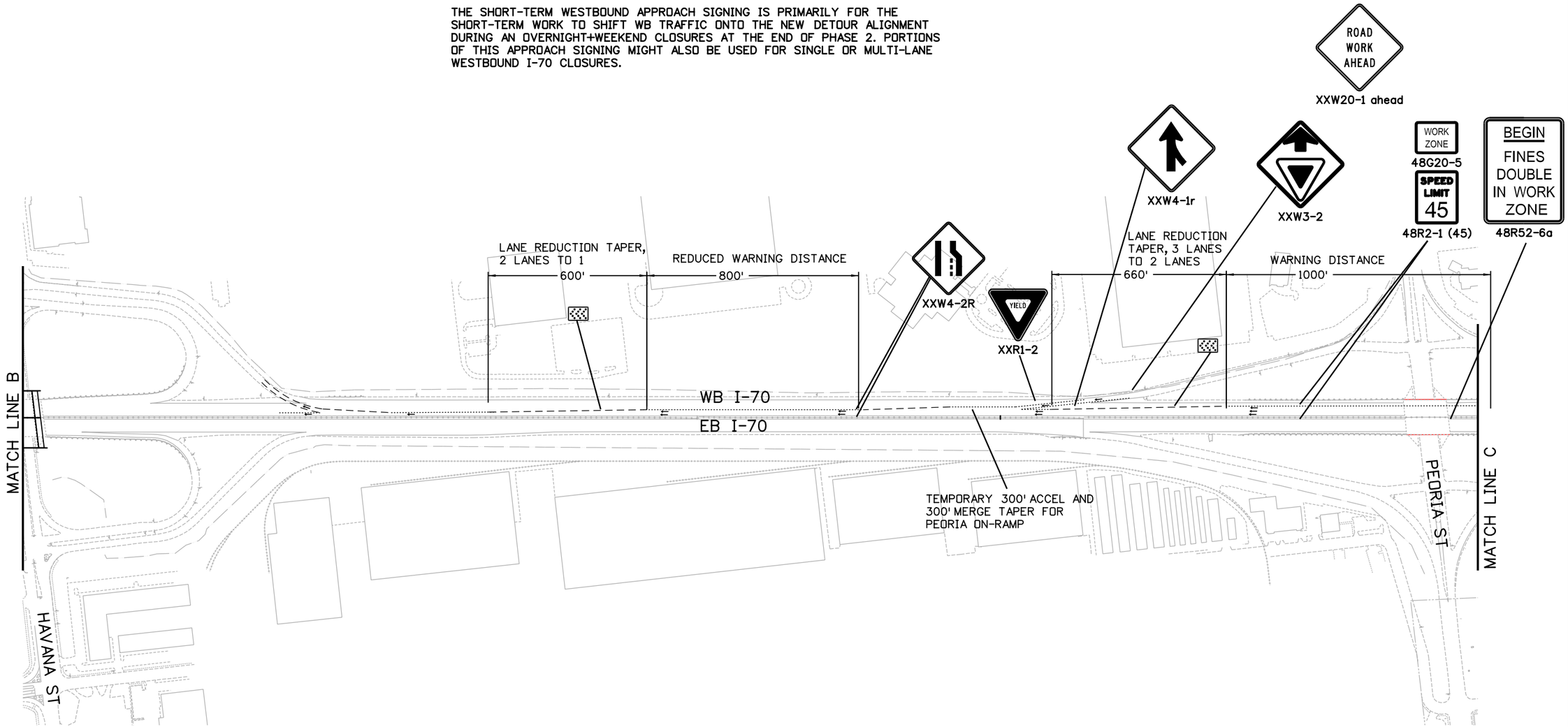

LEGEND

- - - - - DEVICES IN TAPERS AND LANE SHIFTS SPACED AT 50'

..... DEVICES IN TANGENT SECTIONS SPACED AT 100'

N

0' 200' 400' 800'

RFC02 JUNE, 2015 (REVIEW)

bob.harr 12:03:55 PM P:\13033540B - I-70 over Havana DB\19339\Traffic_ITS\Drawings\19339_AdvCon-PhaseShortTermWB.dgn

Print Date: 6/17/2015	Sheet Revisions	Colorado Department of Transportation	As Constructed
File Name: 19339_AdvCon-PhaseShortTermWB.dgn	Date: / Comments / Init.	4670 N. Holly, Denver, CO 80216, Phone: 303-398-6767 FAX: 303-398-6781	No Revisions:
Horiz. Scale: 1:400 Vert. Scale: As Noted		Region 1 KK	Revised:
LAWRENCE TSIOUVARAS SIMMONS HOLDERNESS CONSULTING ENGINEERS			Void:

I-70 OVER HAVANA STREET DESIGN-BUILD WESTBOUND SHORT TERM - RT LANE CLOSURE ADVANCE CONSTRUCTION SIGNING			Project No./Code
Designer: D. WOOLFALL	Structure Numbers		FBR 0704-230
Detailer: D. WOOLFALL			19339
Sheet Subset: PHASE	Subset Sheets: 26 of 29		Sheet Number 201

NOTE: THE 30% PLANS SHOW THE DETOUR LANEAGE, GEOMETRY, AND STRIPING CONCEPT ALONG WITH CRITICAL SIGNING ONLY (CURVE WARNINGS, LANE MERGES, ETC.). RFC PLANS WILL SHOW ALL CONSTRUCTION SIGNING AND DEVICES.

THE SHORT-TERM WESTBOUND APPROACH SIGNING IS PRIMARILY FOR THE SHORT-TERM WORK TO SHIFT WB TRAFFIC ONTO THE NEW DETOUR ALIGNMENT DURING AN OVERNIGHT+WEEKEND CLOSURES AT THE END OF PHASE 2. PORTIONS OF THIS APPROACH SIGNING MIGHT ALSO BE USED FOR SINGLE OR MULTI-LANE WESTBOUND I-70 CLOSURES.

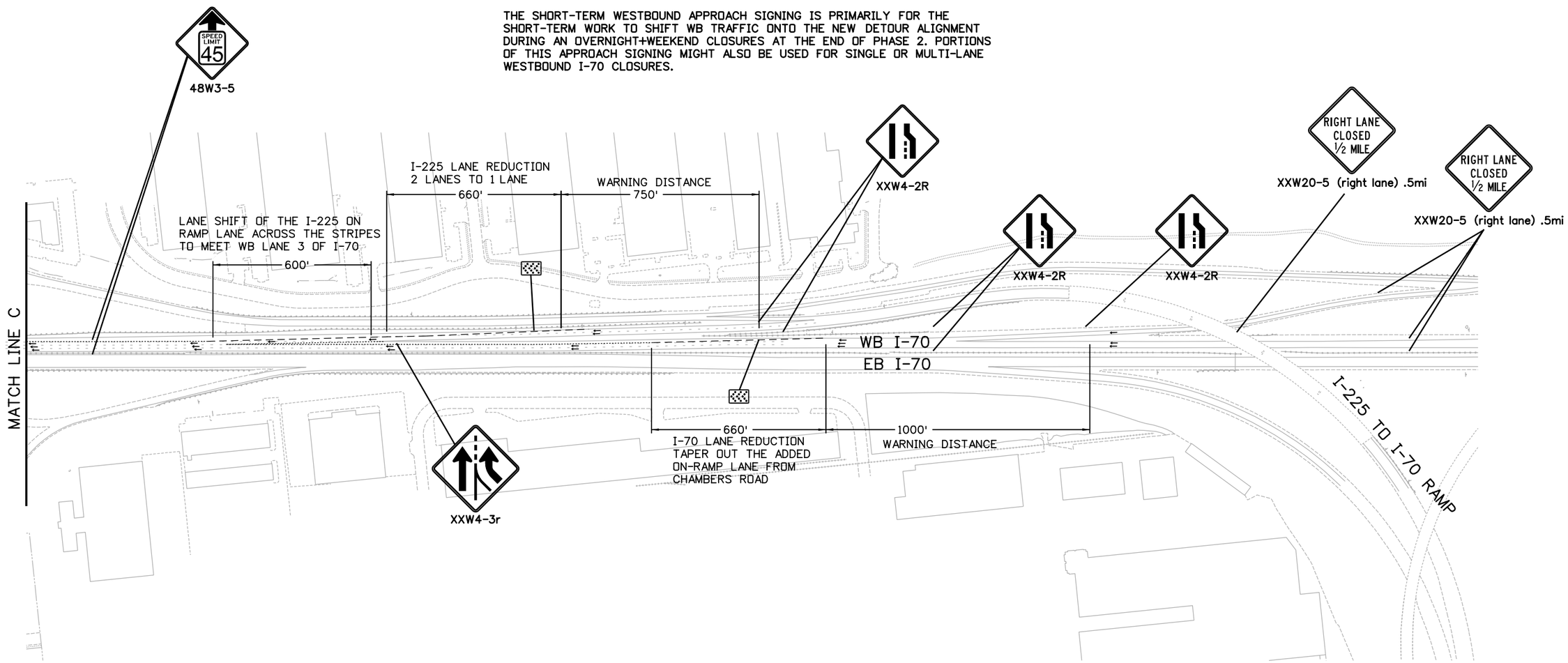

LEGEND

- - - - - DEVICES IN TAPERS AND LANE SHIFTS SPACED AT 50'

..... DEVICES IN TANGENT SECTIONS SPACED AT 100'

N

0' 200' 400' 800'

RFC02 JUNE, 2015 (REVIEW)

bob.harr 12:03:58 PM P:\13033540B - I-70 over Havana DB\19339\Traffic_ITS\Drawings\19339_AdvCon-PhaseShortTermWB.dgn

Print Date: 6/17/2015	Sheet Revisions	Colorado Department of Transportation	As Constructed
File Name: 19339_AdvCon-PhaseShortTermWB.dgn	Date: / Comments / Init.	4670 N. Holly, Denver, CO 80216, Phone: 303-398-6767 FAX: 303-398-6781	No Revisions:
Horiz. Scale: 1:400 Vert. Scale: As Noted		Region 1 KK	Revised:
LAWRENCE TSIOUVARAS SIMMONS HOLDERNESS CONSULTING ENGINEERS			Void:

I-70 OVER HAVANA STREET DESIGN-BUILD WESTBOUND SHORT TERM - RT LANE CLOSURE ADVANCE CONSTRUCTION SIGNING			Project No./Code
Designer: D. WOOLFALL	Structure Numbers		FBR 0704-230
Detailer: D. WOOLFALL			19339
Sheet Subset: PHASE	Subset Sheets: 27 of 29		Sheet Number 202

THE SHORT-TERM WESTBOUND APPROACH SIGNING IS PRIMARILY FOR THE SHORT-TERM WORK TO SHIFT WB TRAFFIC ONTO THE FINAL I-70 ALIGNMENT DURING AN OVERNIGHT CLOSURE AT THE END OF PHASE 3. PORTIONS OF THIS APPROACH SIGNING MIGHT ALSO BE USED FOR SINGLE OR MULTI-LANE WESTBOUND I-70 CLOSURES.

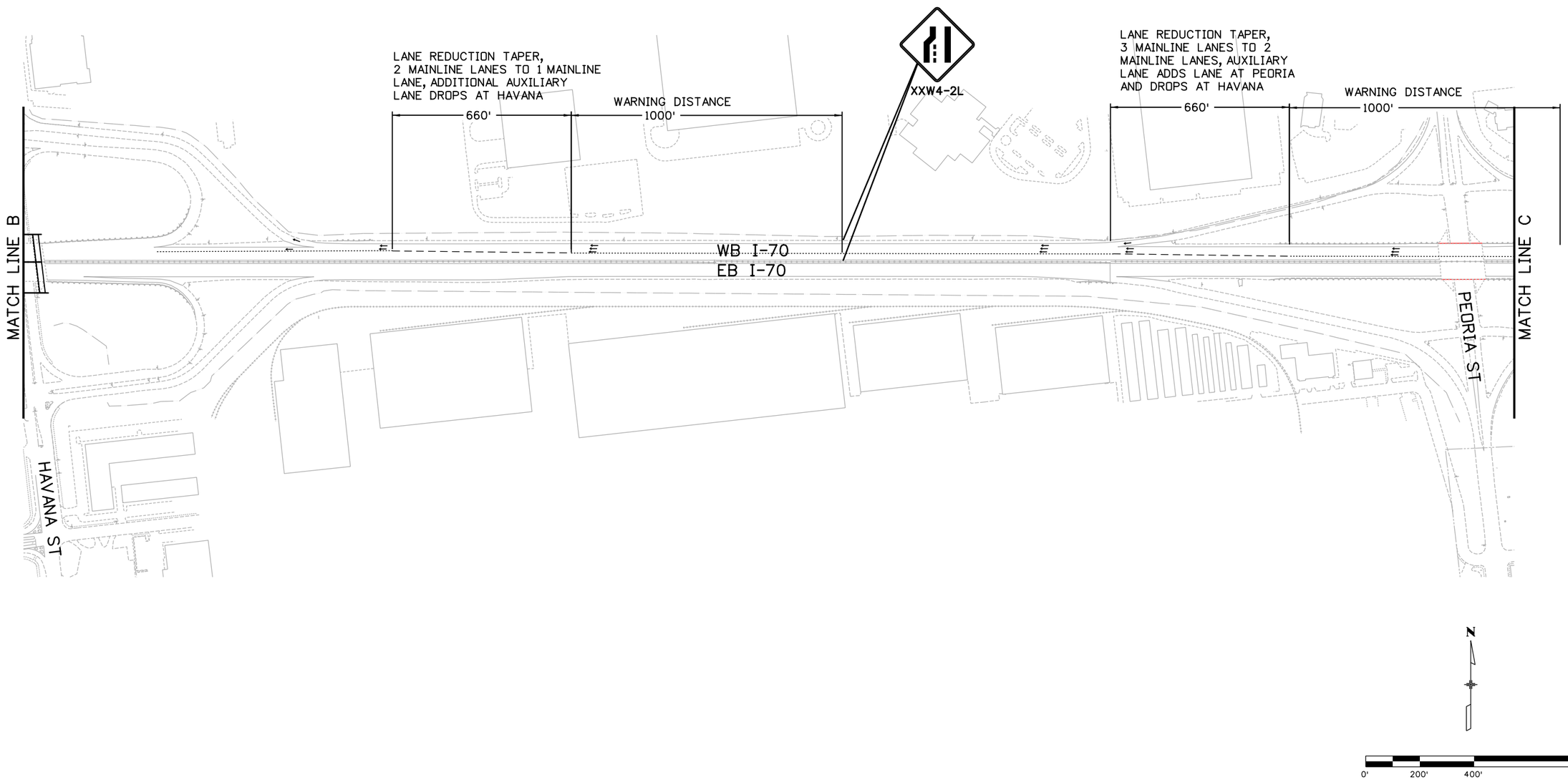

RFC02 JUNE, 2015 (REVIEW)

bob.harr 12:04:03 PM P:\130335408 - I-70 over Havana DB\19339\Traffic_ITS\Drawings\19339_AdvCon-PhaseShortTermWB2.dgn

Print Date: 6/17/2015	Sheet Revisions	Colorado Department of Transportation	As Constructed
File Name: 19339_AdvCon-PhaseShortTermWB2.dgn	Date: / Comments / Init.	4670 N. Holly, Denver, CO 80216, Phone: 303-398-6767 FAX: 303-398-6781	No Revisions:
Horiz. Scale: 1:400 Vert. Scale: As Noted		Region 1 KK	Revised:
LAWRENCE TSIOUVARAS SIMMONS HOLDERNESS CONSULTING ENGINEERS			Void:

I-70 OVER HAVANA STREET DESIGN-BUILD WESTBOUND SHORT TERM - LT LANE CLOSURE ADVANCE CONSTRUCTION SIGNING			Project No./Code
Designer: D. WOOLFALL	Structure Numbers		FBR 0704-230
Detailer: D. WOOLFALL			19339
Sheet Subset: PHASE	Subset Sheets: 28 of 29		Sheet Number 203

THE SHORT-TERM WESTBOUND APPROACH SIGNING IS PRIMARILY FOR THE SHORT-TERM WORK TO SHIFT WB TRAFFIC ONTO THE FINAL I-70 ALIGNMENT DURING AN OVERNIGHT CLOSURE AT THE END OF PHASE 3. PORTIONS OF THIS APPROACH SIGNING MIGHT ALSO BE USED FOR SINGLE OR MULTI-LANE WESTBOUND I-70 CLOSURES.

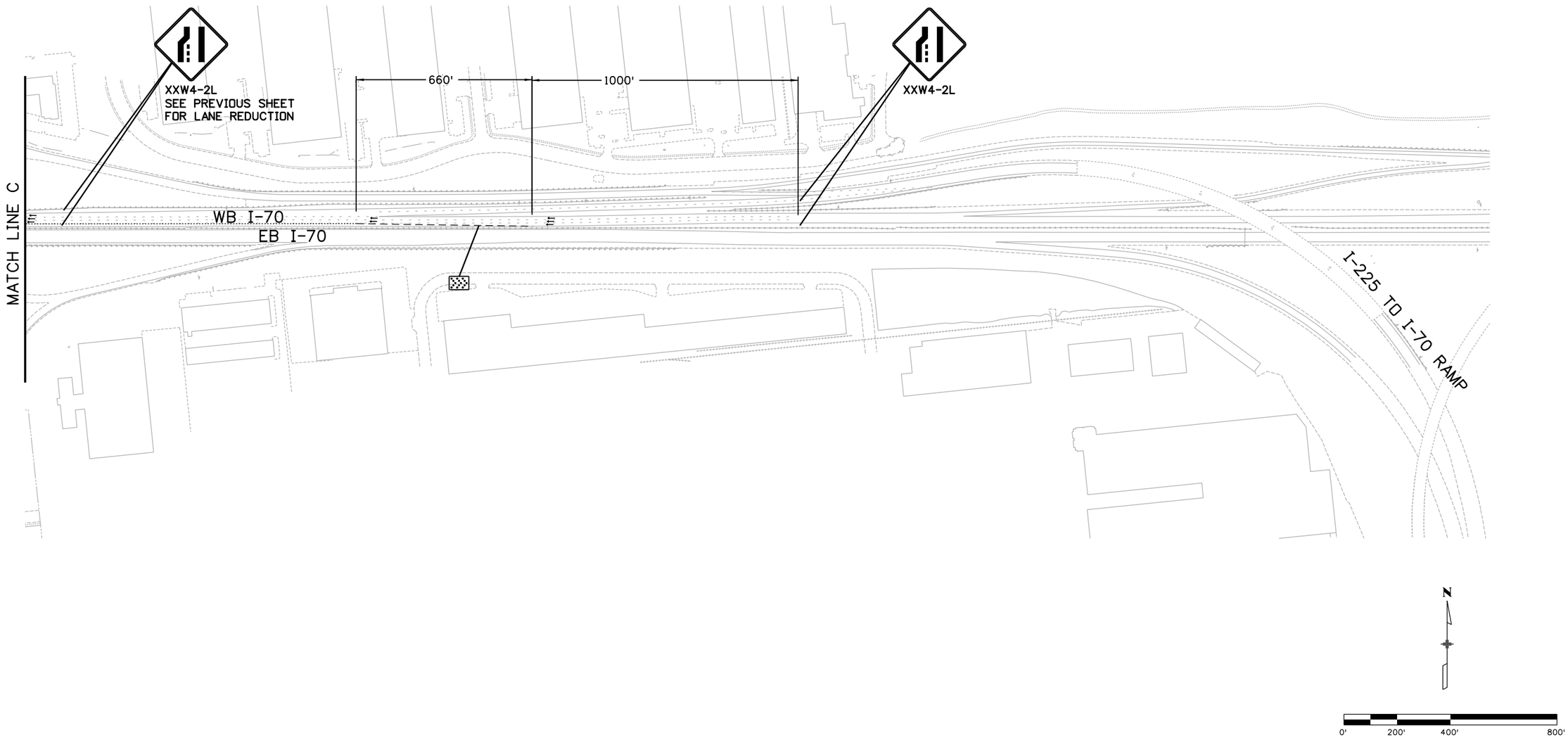

RFC02 JUNE, 2015 (REVIEW)

bob.harr 12:04:06 PM P:\13033540B - I-70 over Havana DB\19339\Traffic_ITS\Drawings\19339_AdvCon-PhaseShortTermWB2.dgn

Print Date: 6/17/2015	Sheet Revisions	Colorado Department of Transportation	As Constructed
File Name: 19339_AdvCon-PhaseShortTermWB2.dgn	Date: / Comments / Init.	4670 N. Holly, Denver, CO 80216, Phone: 303-398-6767 FAX: 303-398-6781	No Revisions:
Horiz. Scale: 1:400 Vert. Scale: As Noted		Region 1 KK	Revised:
TSIOUVARAS SIMMONS HOLDERNESS CONSULTING ENGINEERS			Void:

I-70 OVER HAVANA STREET DESIGN-BUILD
WESTBOUND SHORT TERM - LT LANE CLOSURE
ADVANCE CONSTRUCTION SIGNING

Designer:	D. WOOLFALL	Structure Numbers	
Detailer:	D. WOOLFALL		
Sheet Subset:	PHASE	Subset Sheets:	29 of 29

Project No./Code: FBR 0704-230

19339

Sheet Number 204

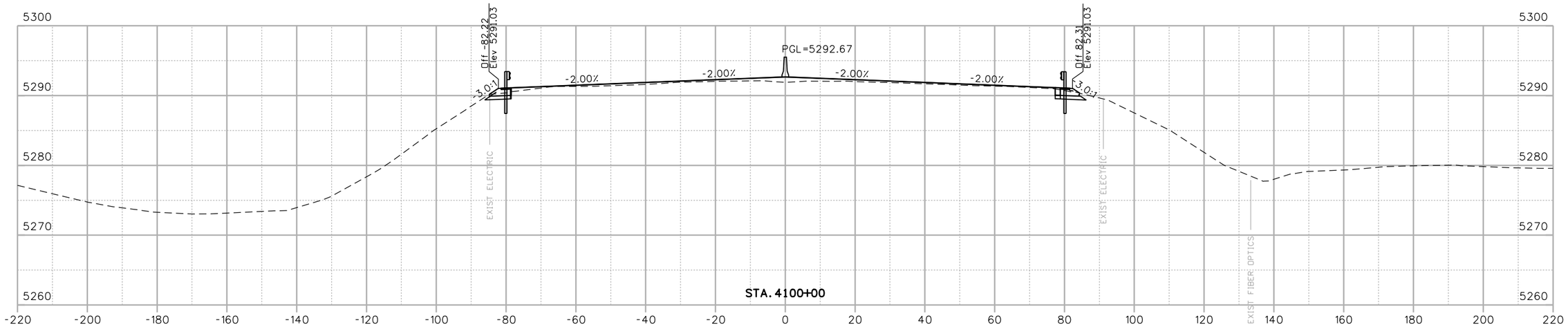

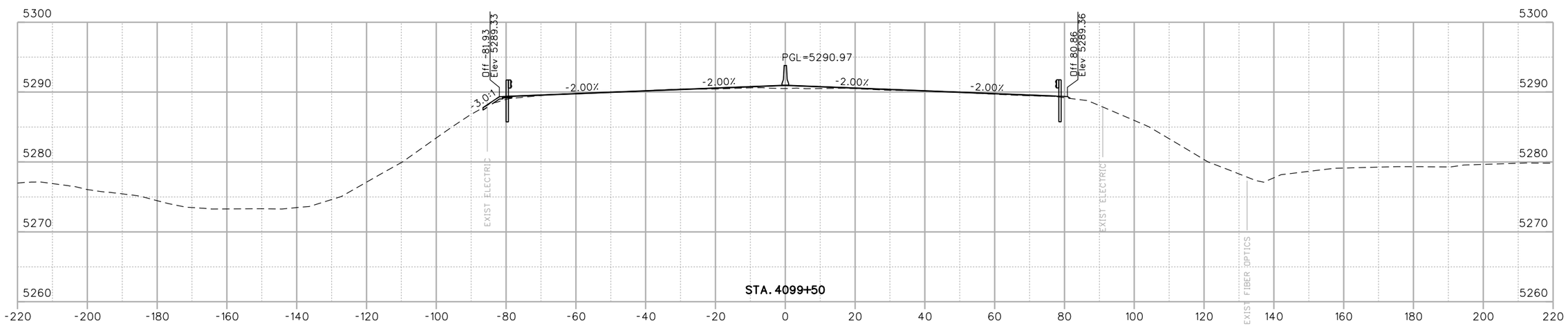

RFC02 JUNE, 2015 (REVIEW)

bob.harr 10:58:21 AM P:\13033540B - I-70 over Havana DB\19339\Design\Drawings\Cross_Sections\19339DES_Xsec.dgn

Print Date: 6/18/2015	Sheet Revisions	Colorado Department of Transportation	As Constructed
File Name: 19339DES_Xsec.dgn	Date: / Comments / Init.	4670 N. Holly, Denver, CO 80216, Phone: 303-398-6767 FAX: 303-398-6781	No Revisions:
Horiz. Scale: 1:30 Vert. Scale: As Noted		Region 1 KK	Revised:
LAWRENCE / TSIOUVARAS SIMMONS HOLDERNESS CONSULTING ENGINEERS			Void:

I-70 OVER HAVANA STREET DESIGN-BUILD
I-70
ROADWAY CROSS SECTIONS

Designer:	R. HARR	Structure Numbers	
Detailer:	R. HARR		
Sheet Subset:	XSEC	Subset Sheets:	1 of 23

Project No./Code	
FBR 0704-230	
19339	
Sheet Number	X1

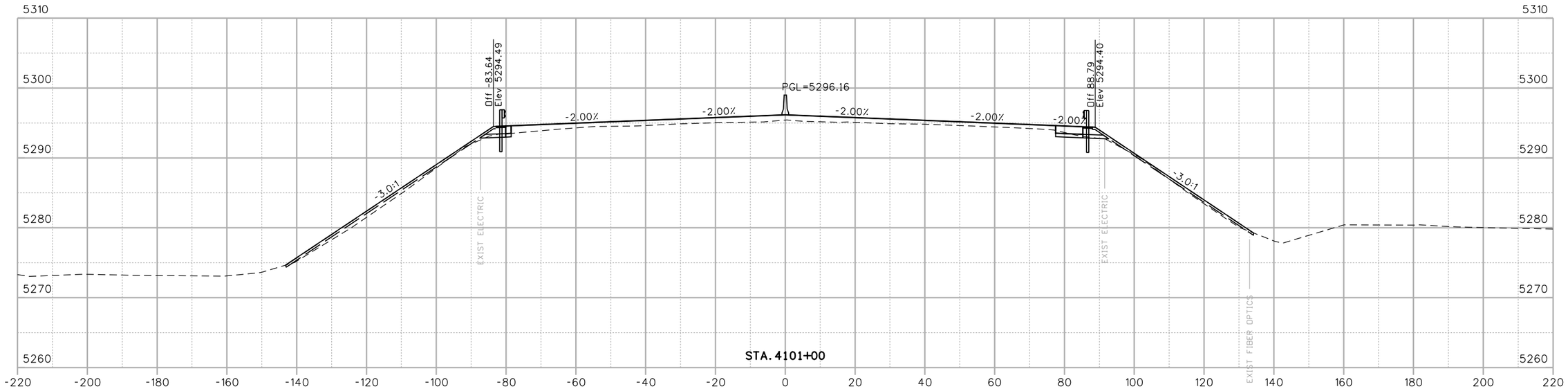

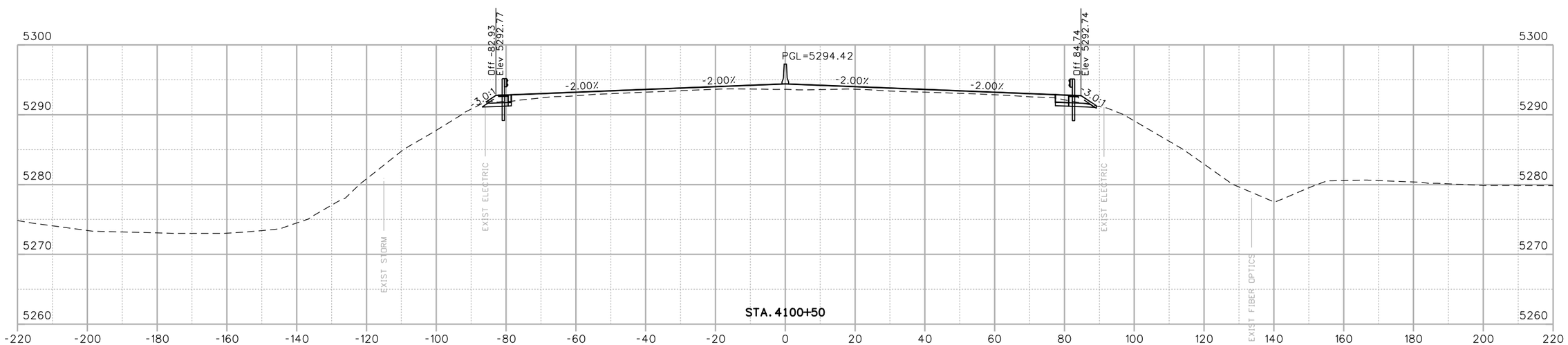

RFC02 JUNE, 2015 (REVIEW)

bob.harr 10:58:23 AM P:\130335408 - I-70 over Havana DB\19339\Design\Drawings\Cross_Sections\19339DES_Xsec.dgn

Print Date: 6/18/2015
File Name: 19339DES_Xsec.dgn
Horiz. Scale: 1:30 Vert. Scale: As Noted

LAWRENCE
TSIOUVARAS SIMMONS HOLDERNESS
CONSULTING ENGINEERS

Sheet Revisions		
Date:	Comments	Init.

Colorado Department of Transportation
CDOT
4670 N. Holly
Denver, CO 80216
Phone: 303-398-6767 FAX: 303-398-6781
Region 1 KK

As Constructed
No Revisions:
Revised:
Void:

I-70 OVER HAVANA STREET DESIGN-BUILD
I-70
ROADWAY CROSS SECTIONS

Designer: R. HARR
Detailer: R. HARR
Structure Numbers
Sheet Subset: XSEC
Subset Sheets: 2 of 23

Project No./Code
FBR 0704-230
19339
Sheet Number X2

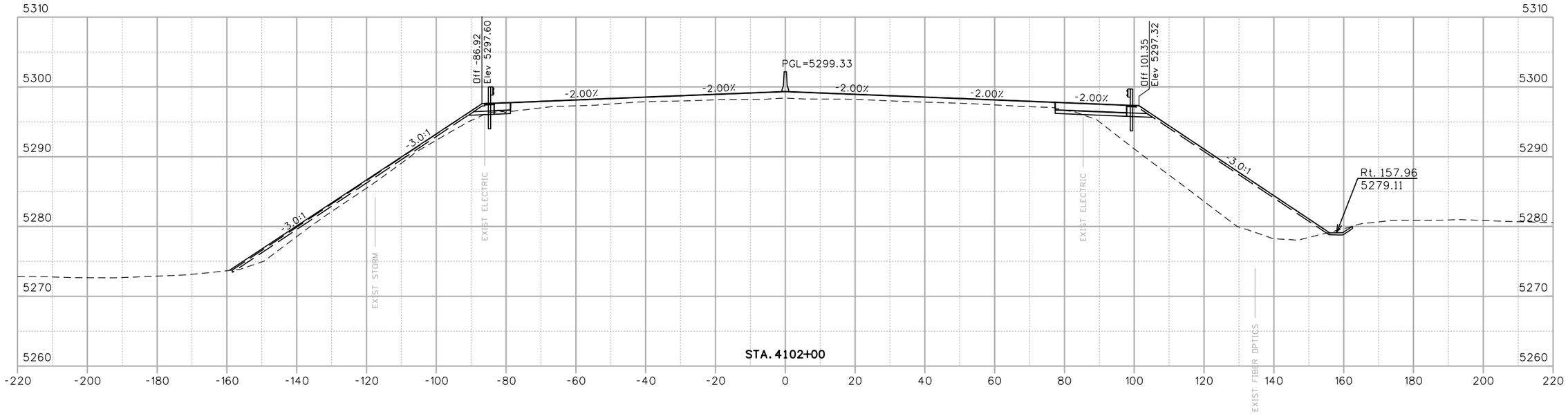

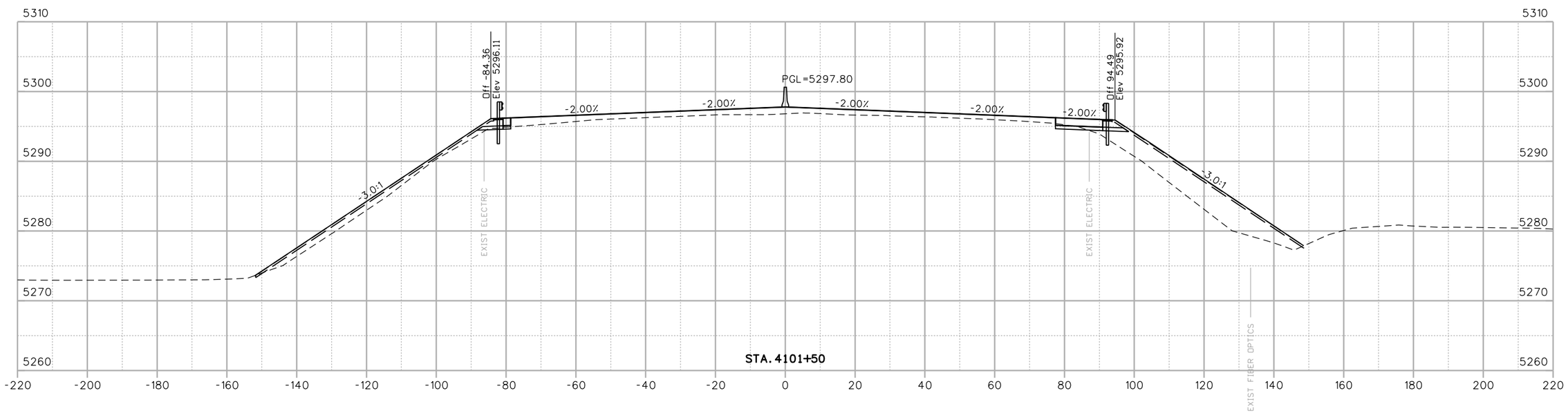

RFC02 JUNE, 2015 (REVIEW)

bob.harr 10:58:24 AM P:\1303354DB - I-70 over Havana DB\19339\Design\Drawings\Cross_Sections\19339DES_Xsec.dgn

Print Date: 6/18/2015
File Name: 19339DES_Xsec.dgn
Horiz. Scale: 1:30 Vert. Scale: As Noted

LAWRENCE
TSIOUVARAS SIMMONS HOLDERNESS
CONSULTING ENGINEERS

Sheet Revisions		
Date:	Comments	Init.

Colorado Department of Transportation
CDOT
4670 N. Holly
Denver, CO 80216
Phone: 303-398-6767 FAX: 303-398-6781
Region 1 KK

As Constructed
No Revisions:
Revised:
Void:

I-70 OVER HAVANA STREET DESIGN-BUILD
I-70
ROADWAY CROSS SECTIONS

Designer: R. HARR
Detailer: R. HARR
Structure Numbers
Sheet Subset: XSEC
Subset Sheets: 3 of 23

Project No./Code
FBR 0704-230
19339
Sheet Number X3

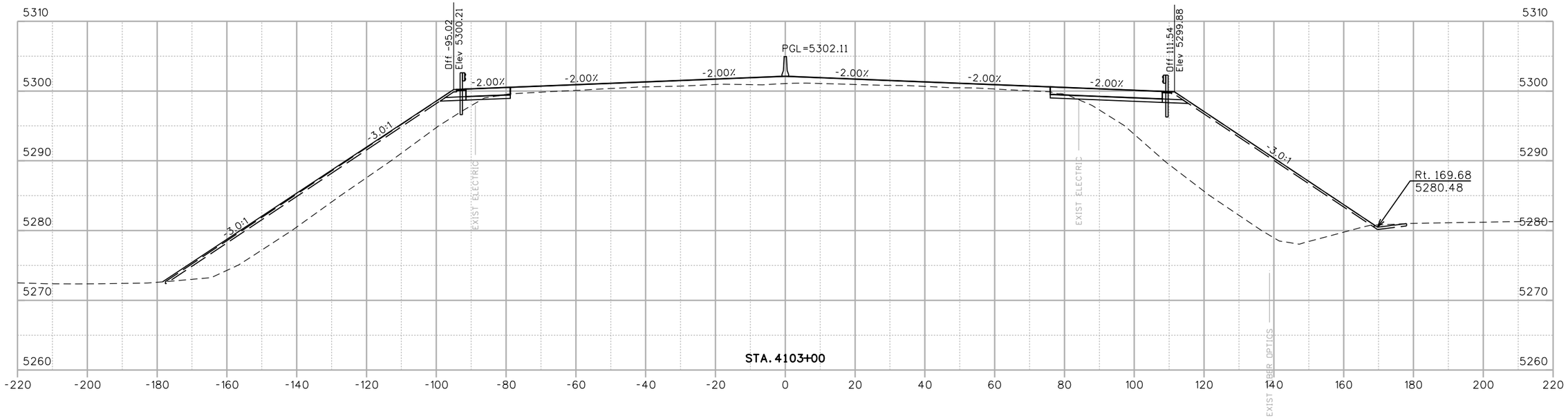

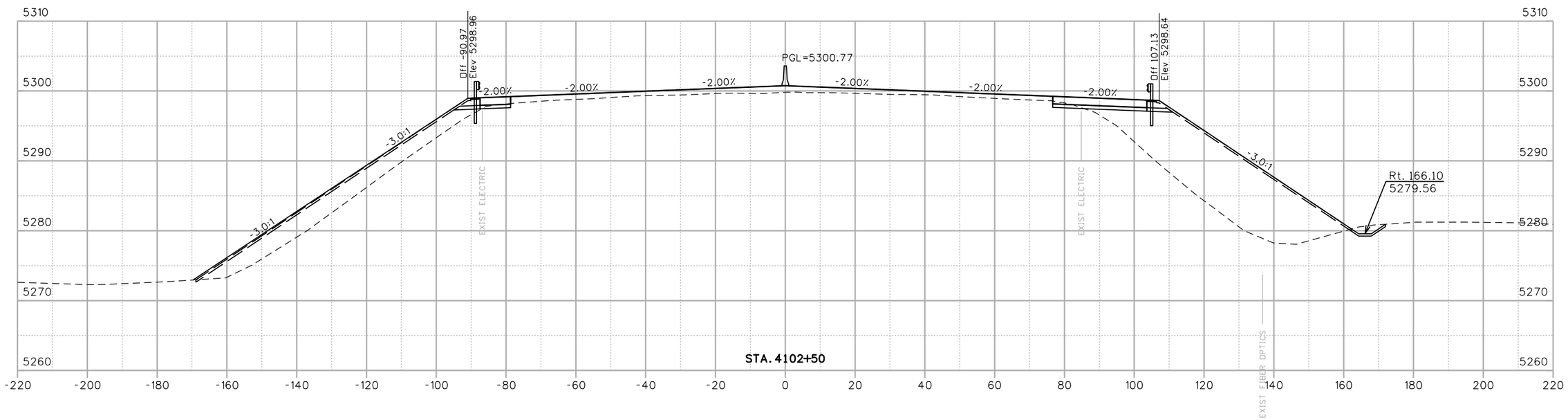

RFC02 JUNE, 2015 (REVIEW)

bob.harr 10:58:26 AM P:\13033540B - I-70 over Havana DB\19339\Design\Drawings\Cross_Sections\19339DES_Xsec.dgn

Print Date: 6/18/2015	Sheet Revisions	Colorado Department of Transportation	As Constructed
File Name: 19339DES_Xsec.dgn	Date: / Comments / Init.	4670 N. Holly, Denver, CO 80216, Phone: 303-398-6767 FAX: 303-398-6781	No Revisions:
Horiz. Scale: 1:30 Vert. Scale: As Noted		Region 1 KK	Revised:
LAWRENCE / TSIOUVARAS SIMMONS HOLDERNESS CONSULTING ENGINEERS			Void:

I-70 OVER HAVANA STREET DESIGN-BUILD I-70 ROADWAY CROSS SECTIONS			Project No./Code
			FBR 0704-230
Designer: R. HARR	Structure Numbers		19339
Detailer: R. HARR			
Sheet Subset: XSEC	Subset Sheets: 4 of 23		Sheet Number X4

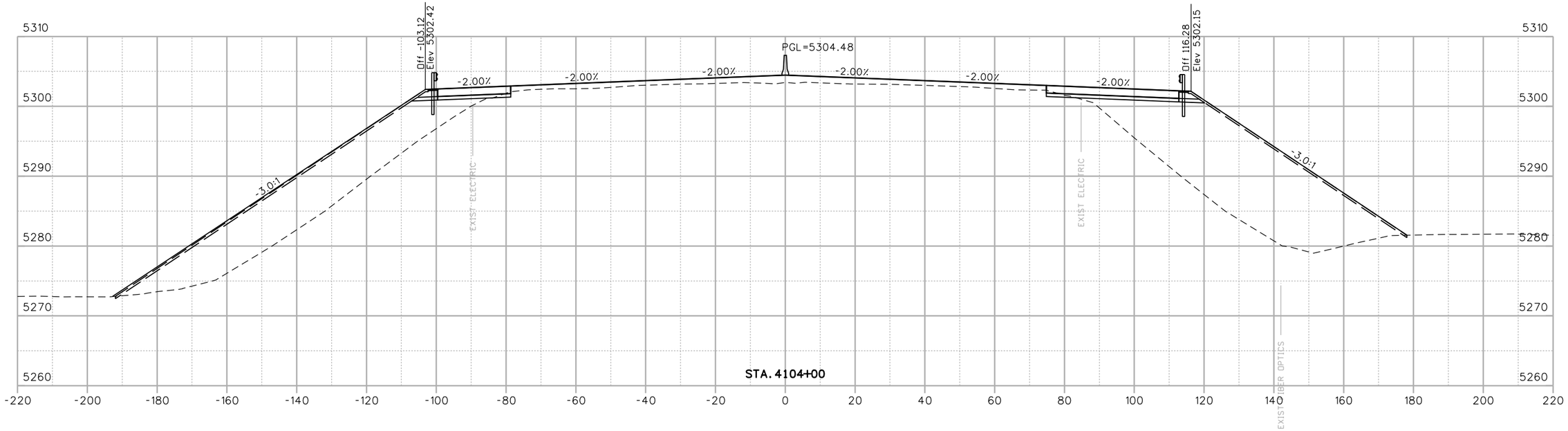

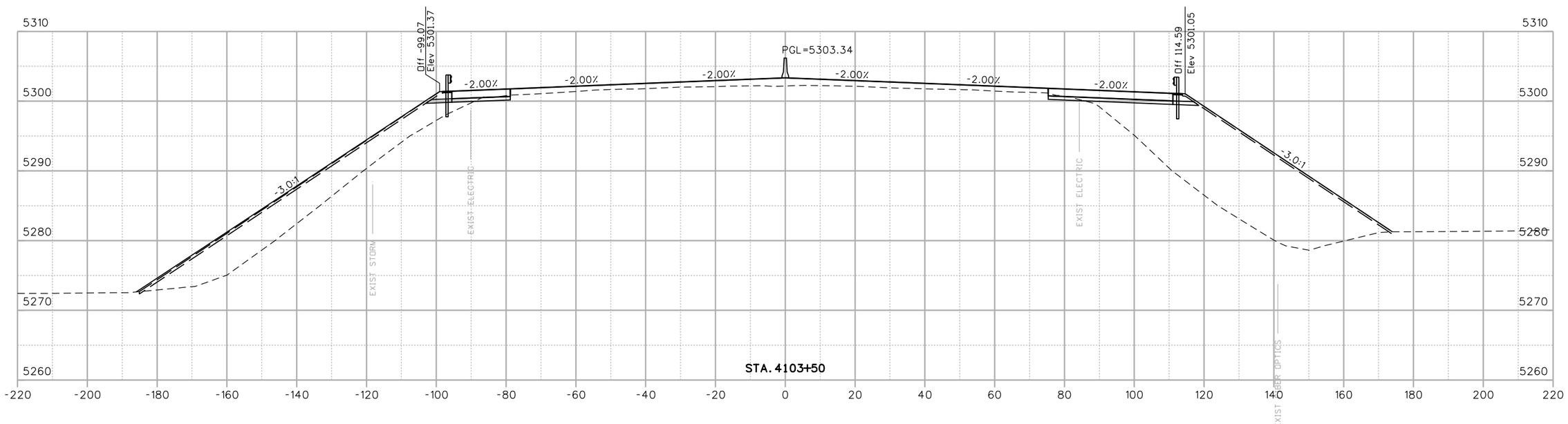

RFC02 JUNE, 2015 (REVIEW)

bob.harr 10:58:27 AM P:\1303354DB - I-70 over Havana DB\19339\Design\Drawings\Cross_Sections\19339DES_Xsec.dgn

Print Date: 6/18/2015	Sheet Revisions		
File Name: 19339DES_Xsec.dgn	Date:	Comments	Init.
Horiz. Scale: 1:30 Vert. Scale: As Noted			
LAWRENCE TSIOUVARAS SIMMONS HOLDERNESS CONSULTING ENGINEERS			

Colorado Department of Transportation
4670 N. Holly
Denver, CO 80216
Phone: 303-398-6767 FAX: 303-398-6781
Region 1 KK

As Constructed
No Revisions:
Revised:
Void:

I-70 OVER HAVANA STREET DESIGN-BUILD
I-70
ROADWAY CROSS SECTIONS

Designer:	R. HARR	Structure Numbers	
Detailer:	R. HARR		
Sheet Subset:	XSEC	Subset Sheets:	5 of 23

Project No./Code
FBR 0704-230
19339
Sheet Number X5

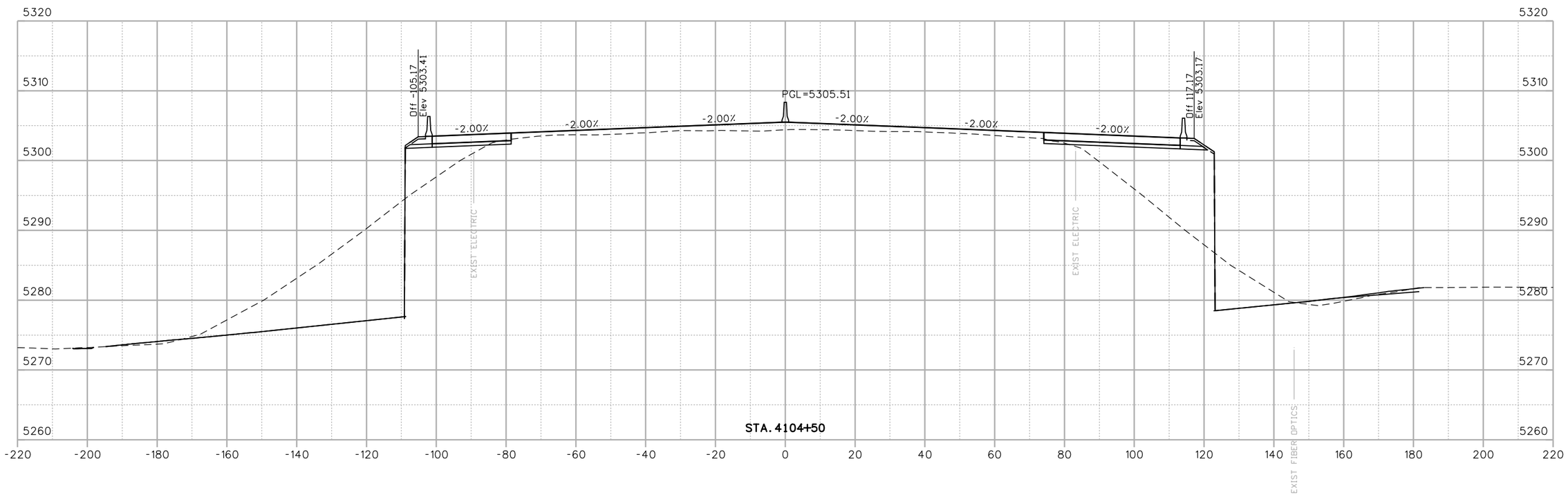

RFC02 JUNE, 2015 (REVIEW)

bob.harr 10:58:28 AM P:\1303354DB - I-70 over Havana DB\19339\Design\Drawings\Cross_Sections\19339DES_Xsec.dgn

Print Date: 6/18/2015	Sheet Revisions	Colorado Department of Transportation	As Constructed
File Name: 19339DES_Xsec.dgn	Date: / Comments / Init.	4670 N. Holly, Denver, CO 80216, Phone: 303-398-6767 FAX: 303-398-6781	No Revisions:
Horiz. Scale: 1:30 Vert. Scale: As Noted		Region 1 KK	Revised:
LAWRENCE TSIOUVARAS SIMMONS HOLDERNESS CONSULTING ENGINEERS			Void:

I-70 OVER HAVANA STREET DESIGN-BUILD I-70 ROADWAY CROSS SECTIONS			Project No./Code
Designer: R. HARR	Structure Numbers		FBR 0704-230
Detailer: R. HARR			19339
Sheet Subset: XSEC	Subset Sheets: 6 of 23		Sheet Number X6

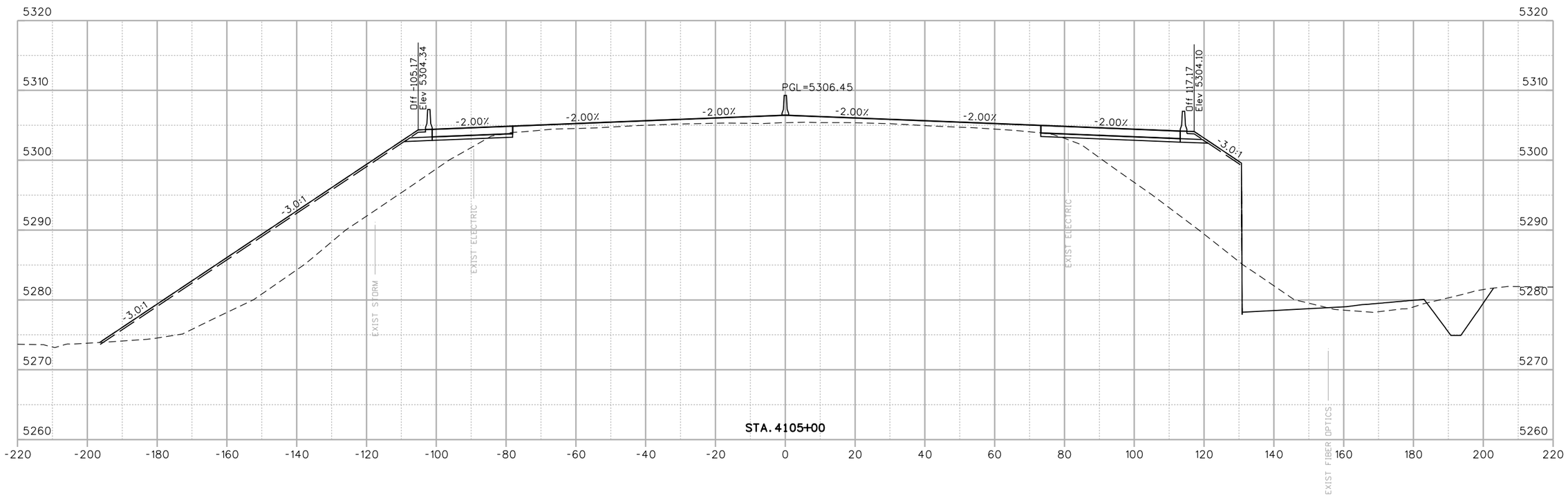

RFC02 JUNE, 2015 (REVIEW)

bob.harr 10:58:30 AM P:\130335\4DB - I-70 over Havana DB\19339\Design\Drawings\Cross_Sections\19339DES_Xsec.dgn

Print Date: 6/18/2015	Sheet Revisions			Colorado Department of Transportation	As Constructed
File Name: 19339DES_Xsec.dgn	Date:	Comments	Init.	4670 N. Holly Denver, CO 80216 Phone: 303-398-6767 FAX: 303-398-6781	No Revisions:
Horiz. Scale: 1:30 Vert. Scale: As Noted					Revised:
LAWRENCE TSIOUVARAS SIMMONS HOLDERNESS CONSULTING ENGINEERS				Region 1 KK	Void:

I-70 OVER HAVANA STREET DESIGN-BUILD I-70 ROADWAY CROSS SECTIONS			Project No./Code
			FBR 0704-230
Designer: R. HARR	Structure Numbers		19339
Detailer: R. HARR			
Sheet Subset: XSEC	Subset Sheets: 7 of 23		Sheet Number X7

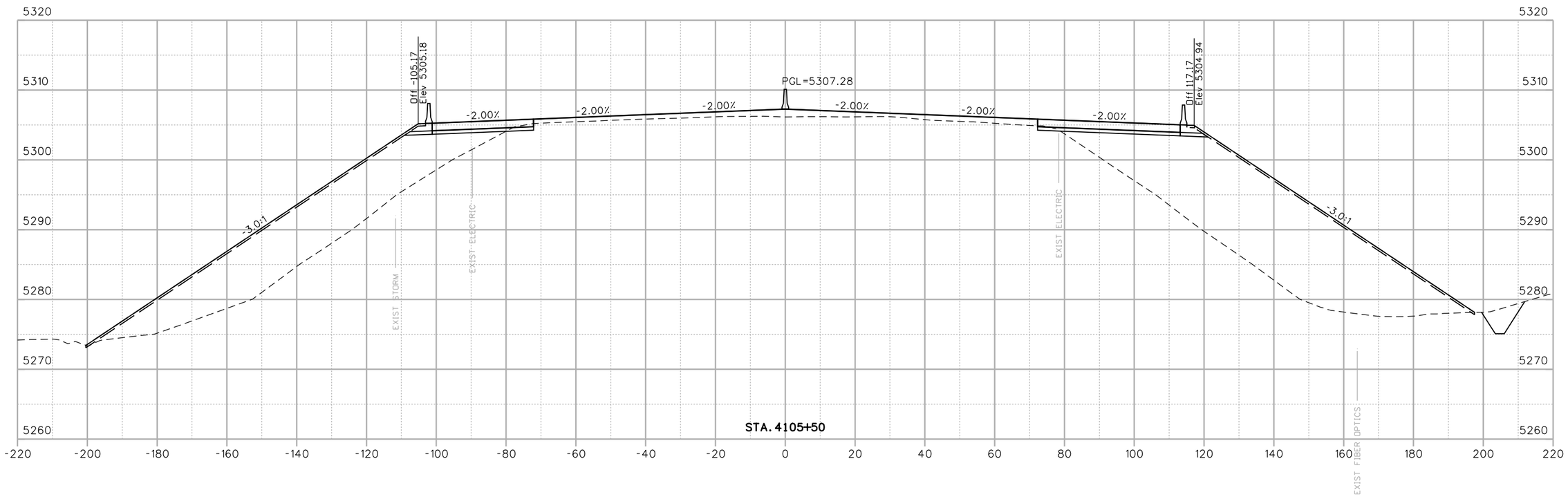

RFC02 JUNE, 2015 (REVIEW)

bob.harr 10:58:31 AM P:\13033540B - I-70 over Havana DB\19339\Design\Drawings\Cross_Sections\19339DES_Xsec.dgn

Print Date: 6/18/2015	Sheet Revisions	Colorado Department of Transportation	As Constructed
File Name: 19339DES_Xsec.dgn	Date: / Comments / Init.	4670 N. Holly Denver, CO 80216 Phone: 303-398-6767 FAX: 303-398-6781	No Revisions:
Horiz. Scale: 1:30 Vert. Scale: As Noted		Region 1 KK	Revised:
LAWRENCE TSIOUVARAS SIMMONS HOLDERNESS CONSULTING ENGINEERS			Void:

I-70 OVER HAVANA STREET DESIGN-BUILD
I-70
ROADWAY CROSS SECTIONS

Designer:	R. HARR	Structure Numbers	
Detailer:	R. HARR		
Sheet Subset:	XSEC	Subset Sheets:	8 of 23

Project No./Code
FBR 0704-230
19339
Sheet Number X8

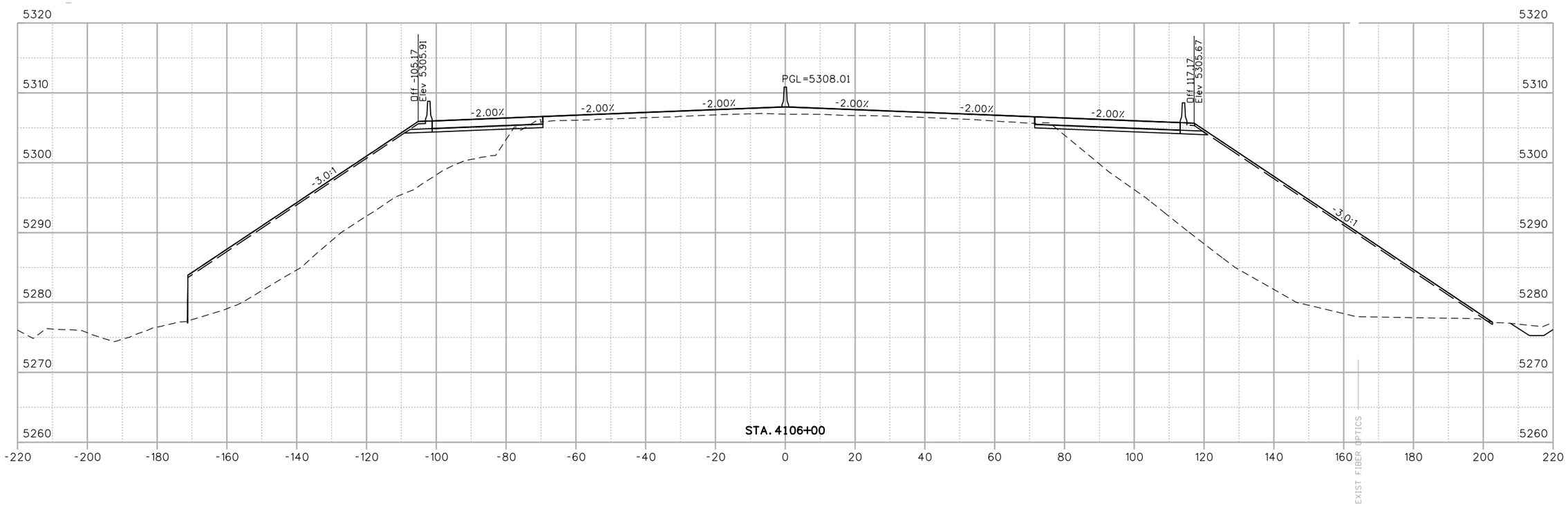

RFC02 JUNE, 2015 (REVIEW)

bob.harr 10:58:32 AM P:\130335408 - I-70 over Havana DB\19339\Design\Drawings\Cross_Sections\19339DES_Xsec.dgn

Print Date: 6/18/2015	Sheet Revisions	Colorado Department of Transportation	As Constructed
File Name: 19339DES_Xsec.dgn	Date: / Comments / Init.	4670 N. Holly Denver, CO 80216 Phone: 303-398-6767 FAX: 303-398-6781	No Revisions:
Horiz. Scale: 1:30 Vert. Scale: As Noted		Region 1 KK	Revised:
LAWRENCE TSIOUVARAS SIMMONS HOLDERNESS CONSULTING ENGINEERS			Void:

I-70 OVER HAVANA STREET DESIGN-BUILD I-70 ROADWAY CROSS SECTIONS			Project No./Code
Designer: R. HARR	Structure Numbers		FBR 0704-230
Detailer: R. HARR			19339
Sheet Subset: XSEC	Subset Sheets: 9 of 23		Sheet Number X9

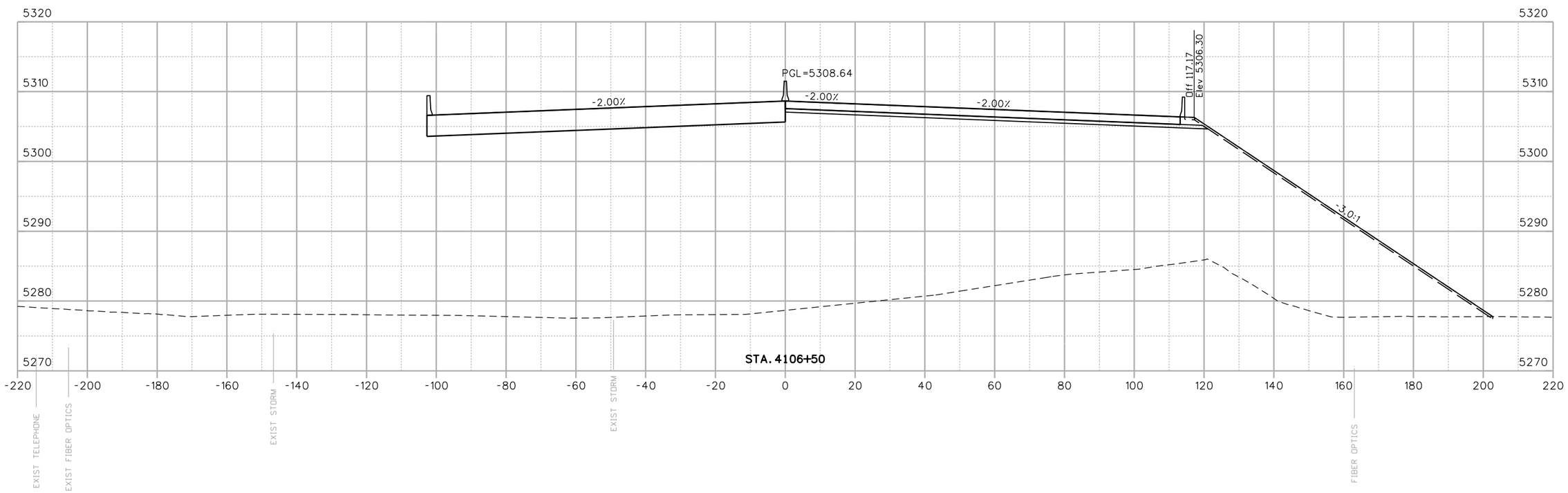

RFC02 JUNE, 2015 (REVIEW)

bob.harr 10:58:34 AM P:\1303354DB - I-70 over Havana DB\19339\Design\Drawings\Cross_Sections\19339DES_Xsec.dgn

Print Date: 6/18/2015	Sheet Revisions			Colorado Department of Transportation	As Constructed
File Name: 19339DES_Xsec.dgn	Date:	Comments	Init.	4670 N. Holly Denver, CO 80216 Phone: 303-398-6767 FAX: 303-398-6781	No Revisions:
Horiz. Scale: 1:30 Vert. Scale: As Noted					Revised:
LAWRENCE TSIOUVARAS SIMMONS HOLDERNESS CONSULTING ENGINEERS				Region 1 KK	Void:

I-70 OVER HAVANA STREET DESIGN-BUILD I-70 ROADWAY CROSS SECTIONS			Project No./Code
Designer: R. HARR	Structure Numbers		FBR 0704-230
Detailer: R. HARR			19339
Sheet Subset: XSEC	Subset Sheets: 10 of 23		Sheet Number X10

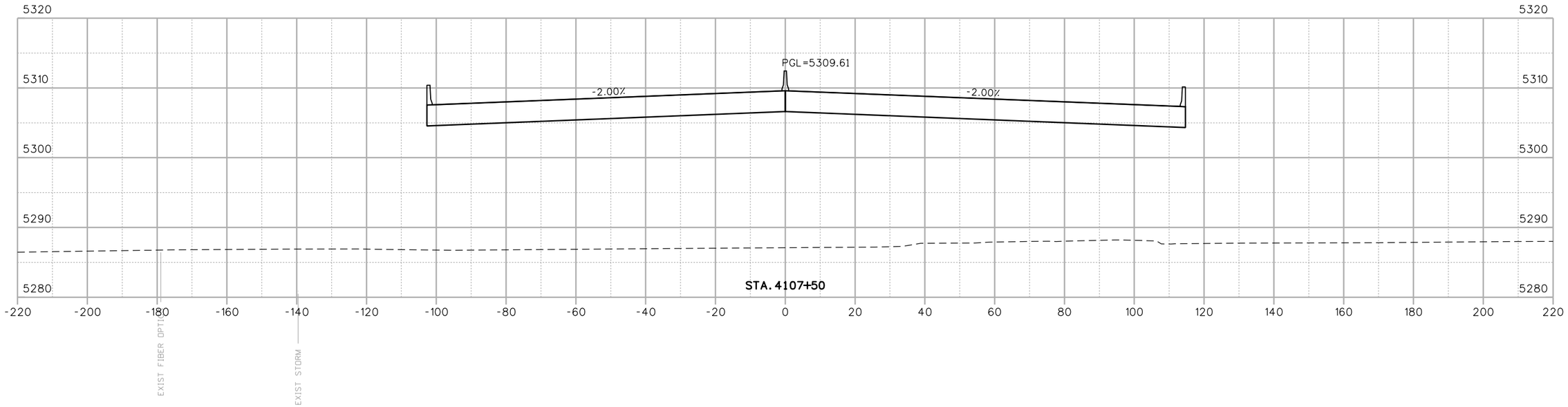

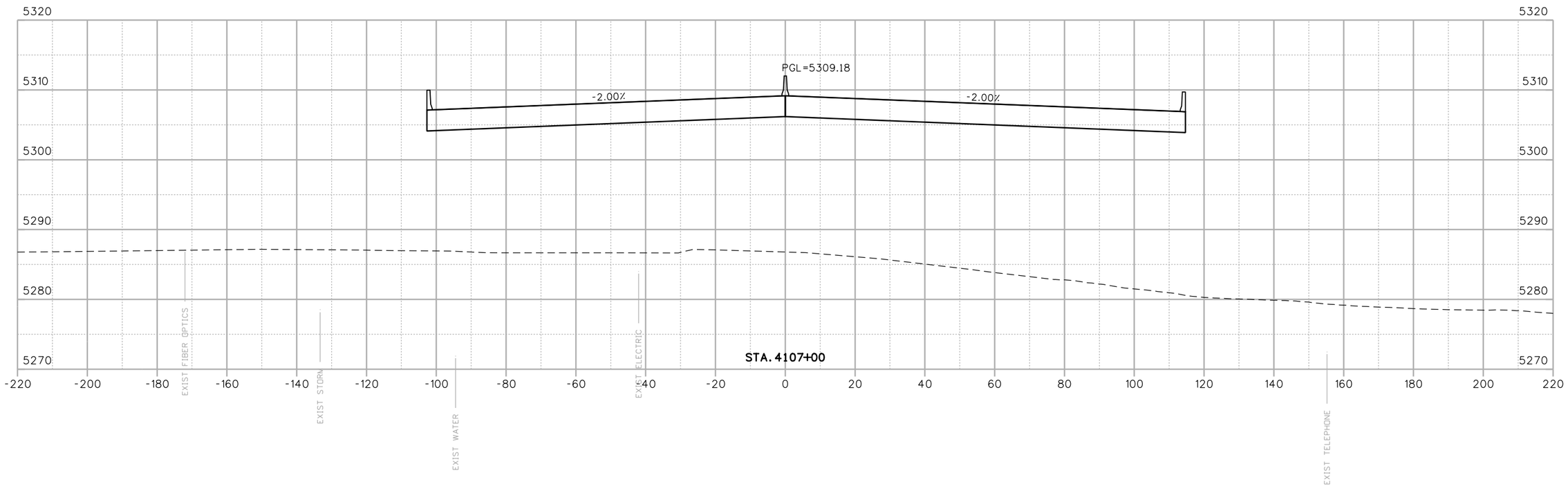

RFC02 JUNE, 2015 (REVIEW)

bob.harr 10:58:35 AM P:\13033540B - I-70 over Havana DB\19339\Design\Drawings\Cross_Sections\19339DES_Xsec.dgn

Print Date: 6/18/2015	Sheet Revisions	Colorado Department of Transportation	As Constructed
File Name: 19339DES_Xsec.dgn	Date: / Comments / Init.	4670 N. Holly, Denver, CO 80216, Phone: 303-398-6767 FAX: 303-398-6781	No Revisions:
Horiz. Scale: 1:30 Vert. Scale: As Noted		Region 1 KK	Revised:
LAWRENCE TSIOUVARAS SIMMONS HOLDERNESS CONSULTING ENGINEERS			Void:

I-70 OVER HAVANA STREET DESIGN-BUILD I-70 ROADWAY CROSS SECTIONS			
Designer: R. HARR	Structure Numbers		
Detailer: R. HARR			
Sheet Subset: XSEC	Subset Sheets: 11 of 23		

Project No./Code
FBR 0704-230
19339
Sheet Number X11

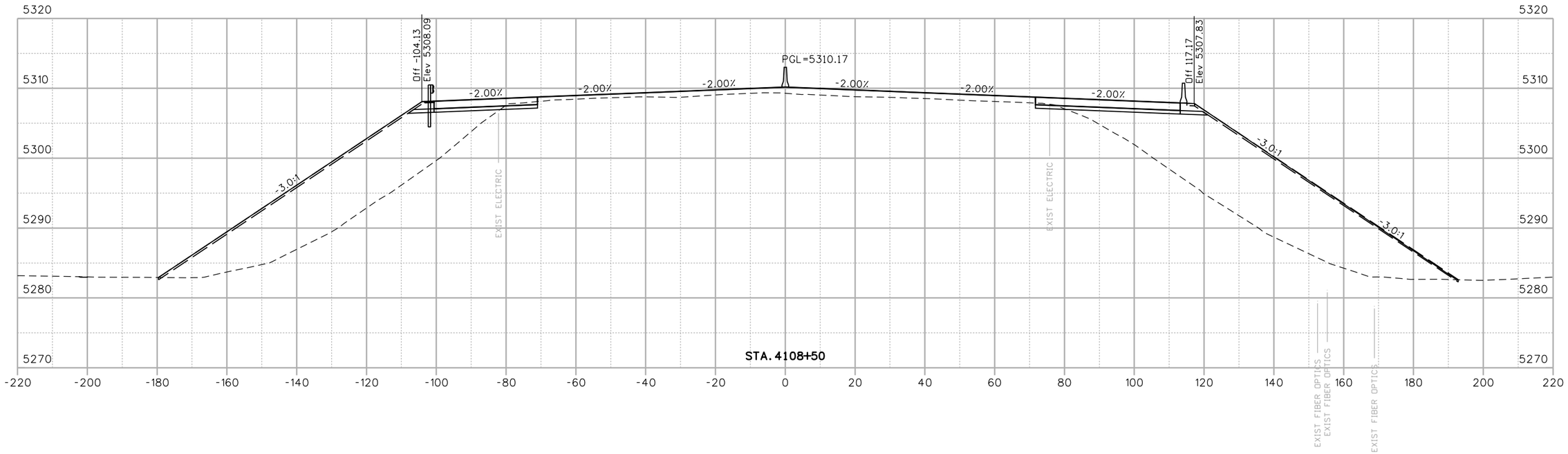

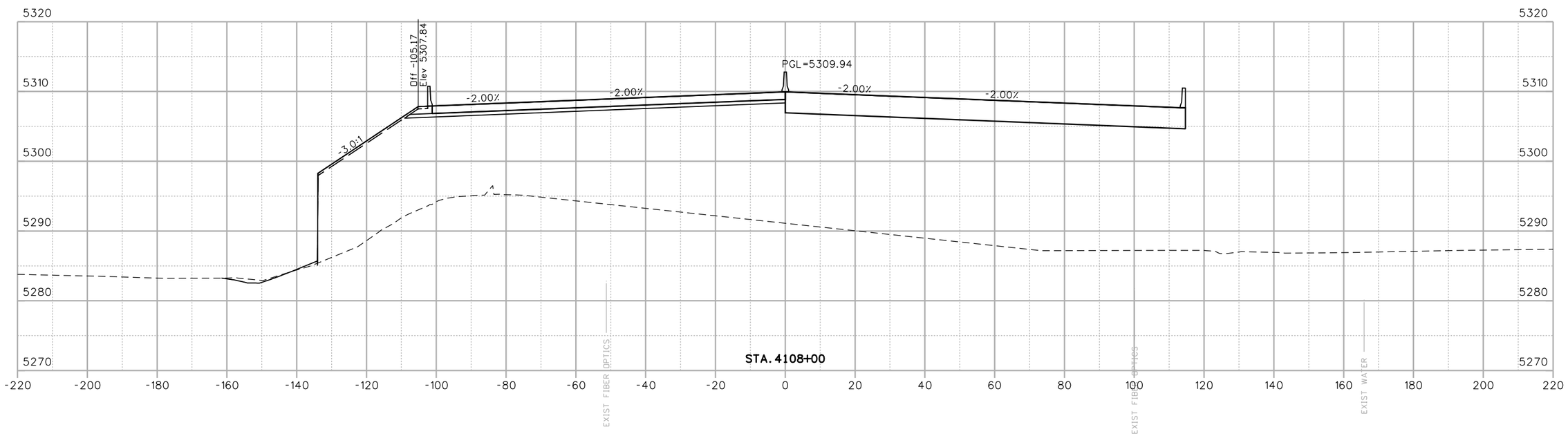

RFC02 JUNE, 2015 (REVIEW)

bob.harr 10:58:36 AM P:\13033540B - I-70 over Havana DB\19339\Design\Drawings\Cross_Sections\19339DES_Xsec.dgn

Print Date: 6/18/2015	Sheet Revisions	Colorado Department of Transportation	As Constructed
File Name: 19339DES_Xsec.dgn	Date: / Comments / Init.	4670 N. Holly, Denver, CO 80216, Phone: 303-398-6767 FAX: 303-398-6781	No Revisions:
Horiz. Scale: 1:30 Vert. Scale: As Noted		Region 1 KK	Revised:
LAWRENCE TSIOUVARAS SIMMONS HOLDERNESS CONSULTING ENGINEERS			Void:

I-70 OVER HAVANA STREET DESIGN-BUILD I-70 ROADWAY CROSS SECTIONS			Project No./Code
Designer: R. HARR	Structure Numbers		FBR 0704-230
Detailer: R. HARR			19339
Sheet Subset: XSEC	Subset Sheets: 12 of 23		Sheet Number X12

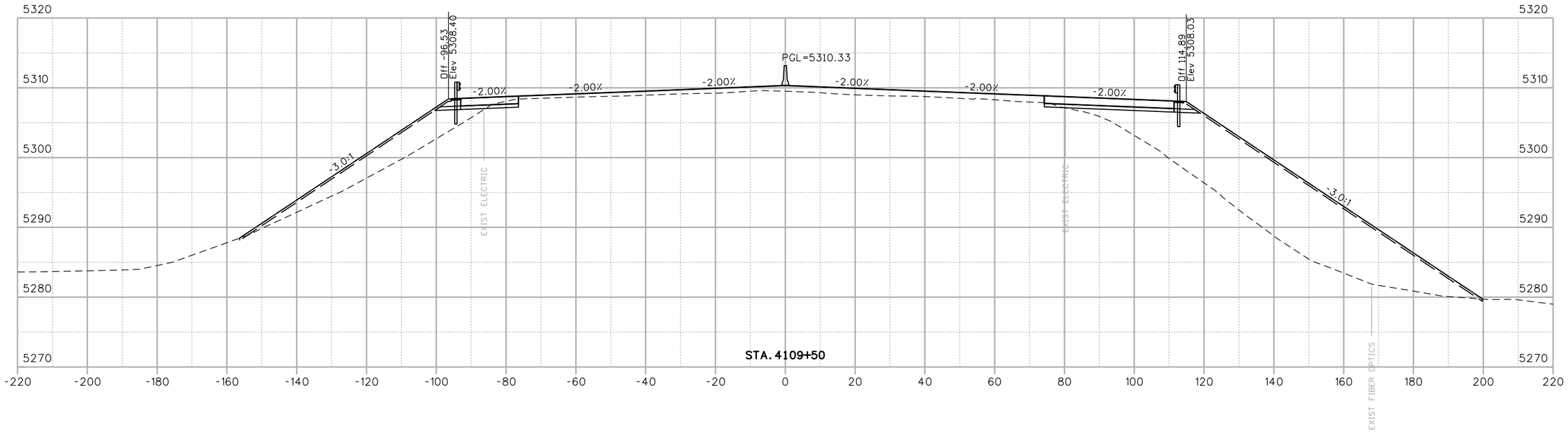

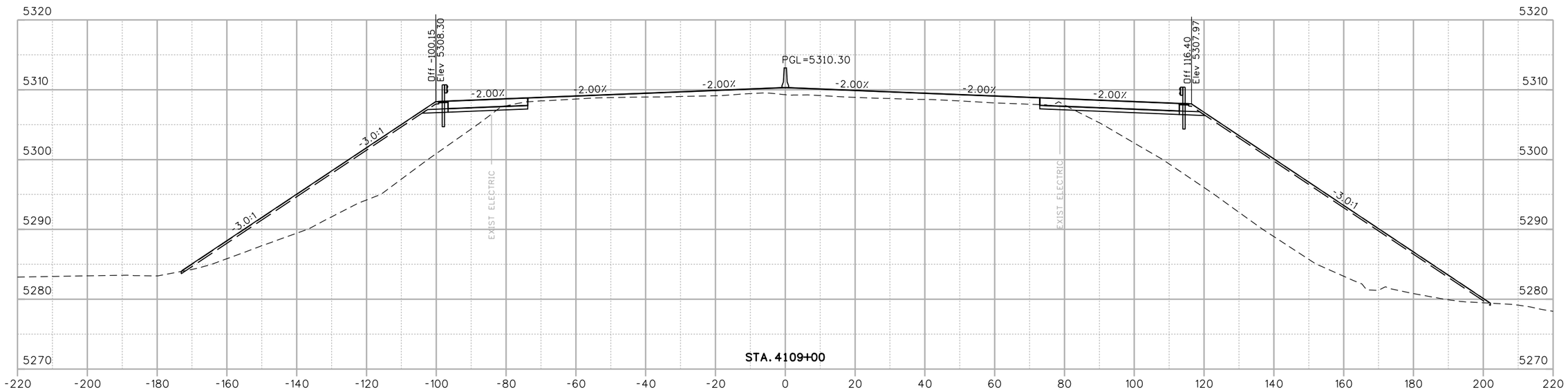

bob.harr 10:58:38 AM P:\130335408 - I-70 over Havana DB\19339\Design\Drawings\Cross_Sections\19339DES_Xsec.dgn

RFC02 JUNE, 2015 (REVIEW)

Print Date: 6/18/2015	Sheet Revisions	Colorado Department of Transportation	As Constructed
File Name: 19339DES_Xsec.dgn	Date: / Comments / Init.	4670 N. Holly, Denver, CO 80216, Phone: 303-398-6767 FAX: 303-398-6781	No Revisions:
Horiz. Scale: 1:30 Vert. Scale: As Noted		Region 1 KK	Revised:
LAWRENCE TSIOUVARAS SIMMONS HOLDERNESS CONSULTING ENGINEERS			Void:

I-70 OVER HAVANA STREET DESIGN-BUILD I-70 ROADWAY CROSS SECTIONS			
Designer: R. HARR	Structure Numbers		
Detailer: R. HARR			
Sheet Subset: XSEC	Subset Sheets: 13 of 23		

Project No./Code
FBR 0704-230
19339
Sheet Number X13

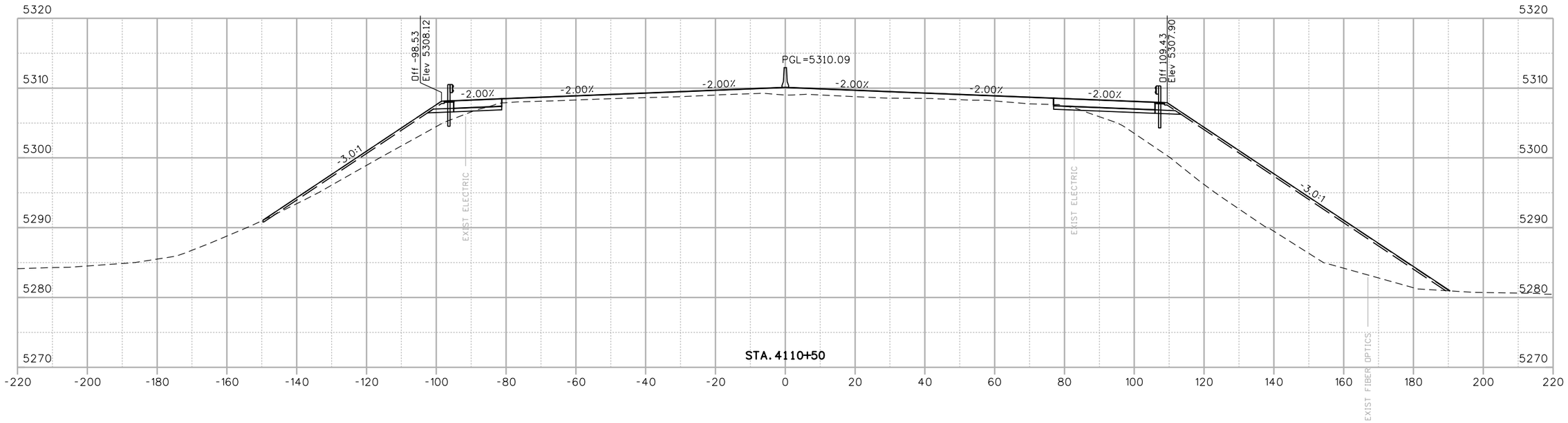

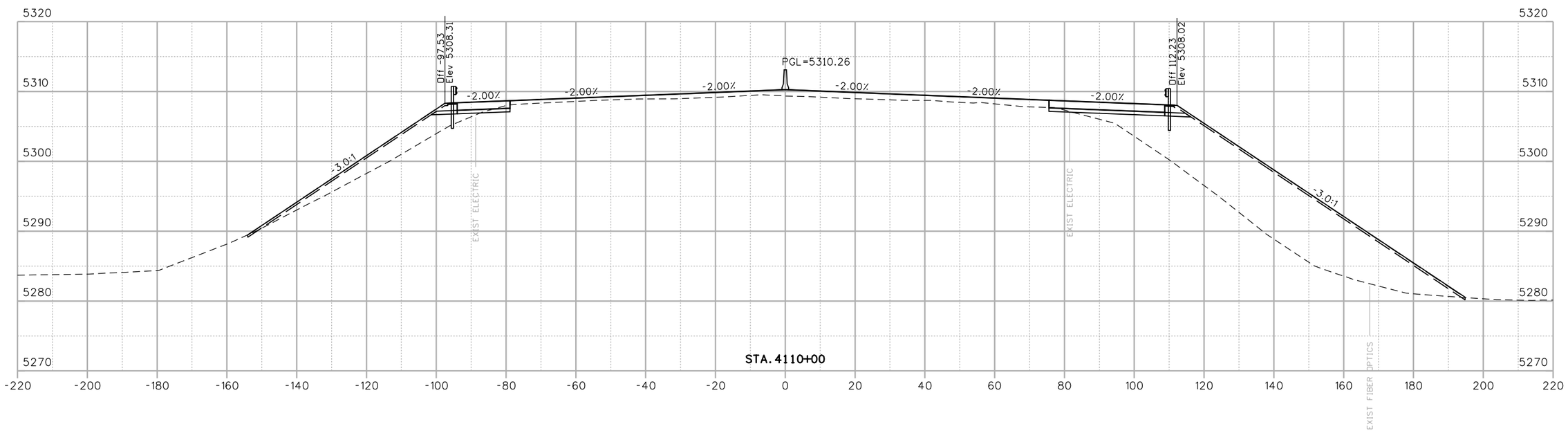

RFC02 JUNE, 2015 (REVIEW)

bob.harr 10:58:39 AM P:\13033540B - I-70 over Havana DB\19339\Design\Drawings\Cross_Sections\19339DES_Xsec.dgn

Print Date: 6/18/2015	Sheet Revisions	Colorado Department of Transportation	As Constructed
File Name: 19339DES_Xsec.dgn	Date: / Comments / Init.	4670 N. Holly, Denver, CO 80216, Phone: 303-398-6767 FAX: 303-398-6781	No Revisions:
Horiz. Scale: 1:30 Vert. Scale: As Noted		Region 1 KK	Revised:
LAWRENCE TSIOUVARAS SIMMONS HOLDERNESS CONSULTING ENGINEERS			Void:

I-70 OVER HAVANA STREET DESIGN-BUILD I-70 ROADWAY CROSS SECTIONS			Project No./Code
Designer: R. HARR	Structure Numbers		FBR 0704-230
Detailer: R. HARR			19339
Sheet Subset: XSEC	Subset Sheets: 14 of 23		Sheet Number X14

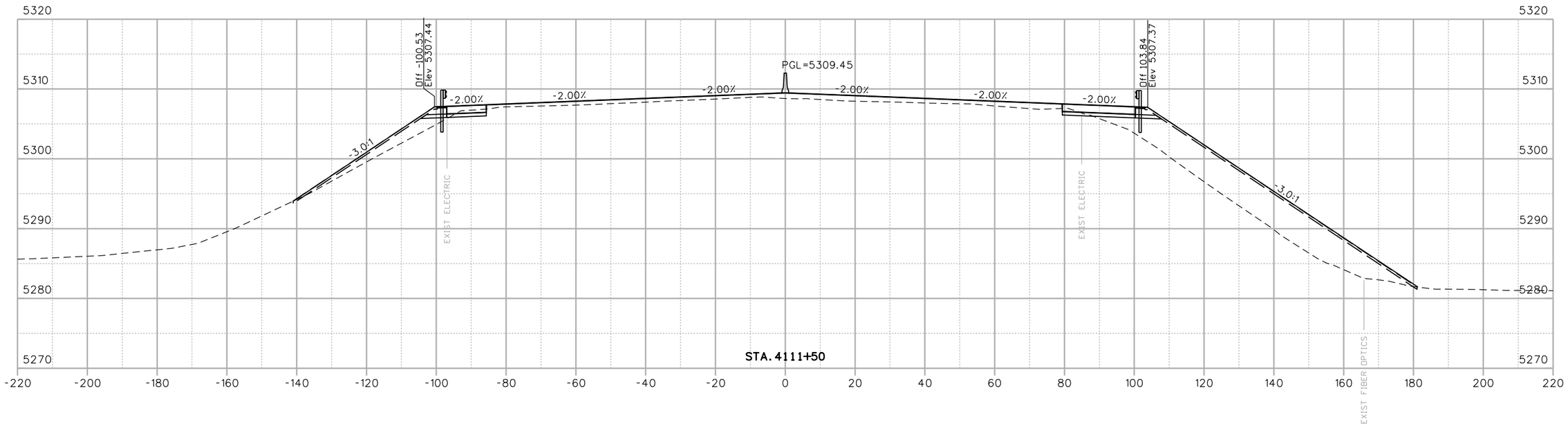

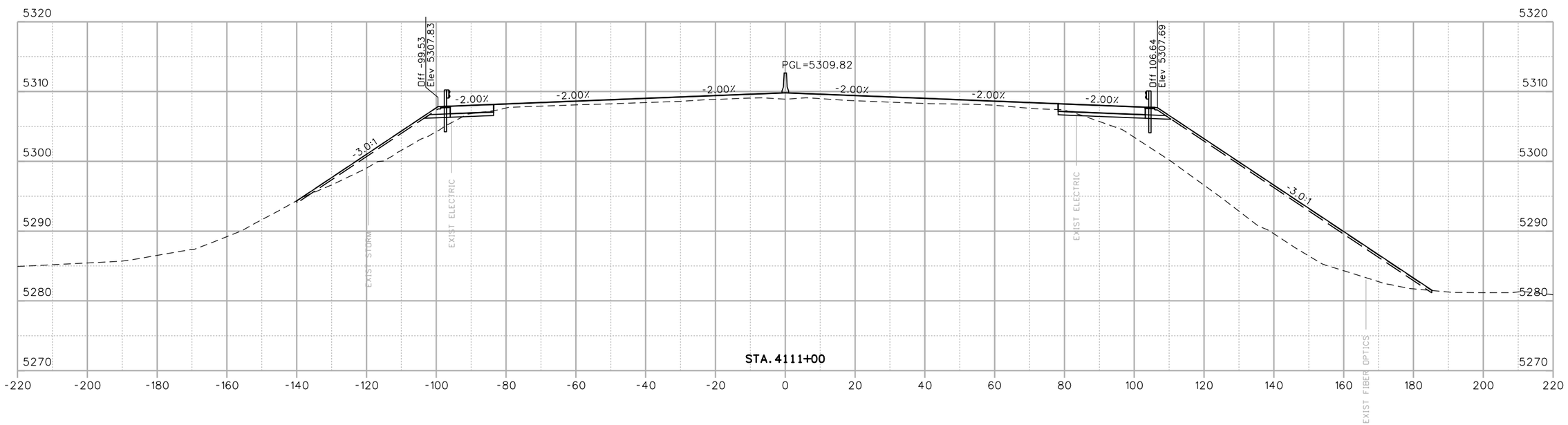

RFC02 JUNE, 2015 (REVIEW)

bob.harr 10:58:40 AM P:\130335408 - I-70 over Havana DB\19339\Design\Drawings\Cross_Sections\19339DES_Xsec.dgn

Print Date: 6/18/2015	Sheet Revisions	Colorado Department of Transportation	As Constructed
File Name: 19339DES_Xsec.dgn	Date: / Comments / Init.	4670 N. Holly, Denver, CO 80216, Phone: 303-398-6767 FAX: 303-398-6781	No Revisions:
Horiz. Scale: 1:30 Vert. Scale: As Noted		Region 1 KK	Revised:
LAWRENCE TSIOUVARAS SIMMONS HOLDERNESS CONSULTING ENGINEERS			Void:

I-70 OVER HAVANA STREET DESIGN-BUILD I-70 ROADWAY CROSS SECTIONS			Project No./Code
Designer: R. HARR	Structure Numbers		FBR 0704-230
Detailer: R. HARR			19339
Sheet Subset: XSEC	Subset Sheets: 15 of 23		Sheet Number X15

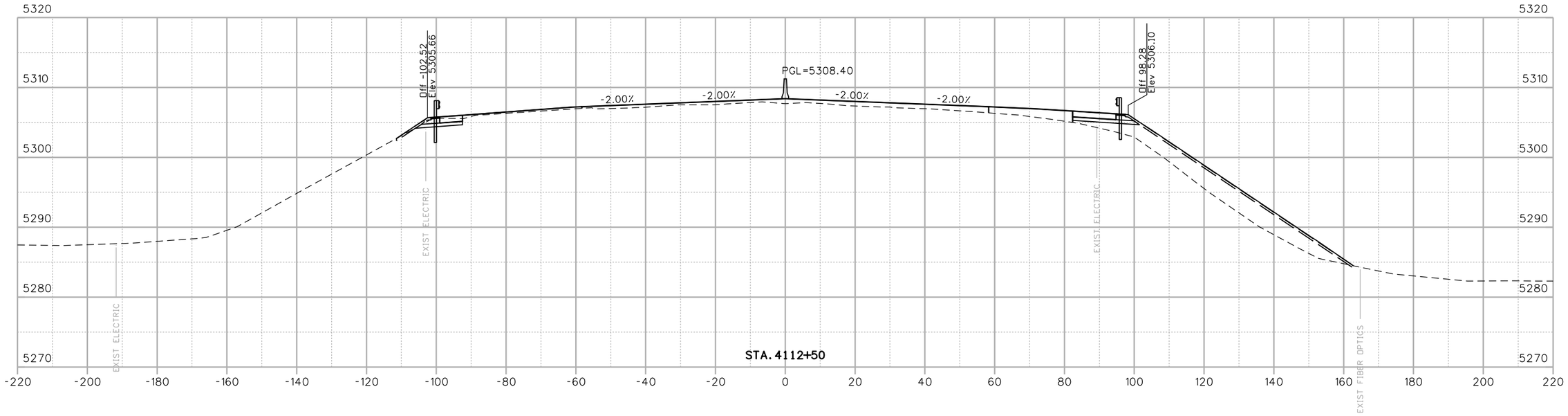

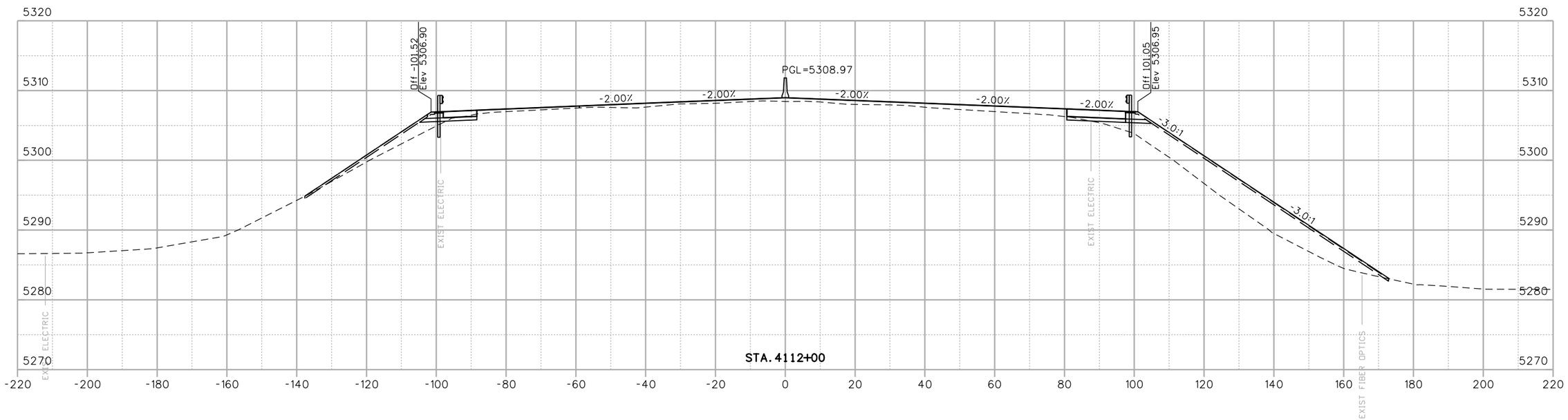

RFC02 JUNE, 2015 (REVIEW)

bob.harr 10:58:42 AM P:\1303354DB - I-70 over Havana DB\19339\Design\Drawings\Cross_Sections\19339DES_Xsec.dgn

Print Date: 6/18/2015	Sheet Revisions	Colorado Department of Transportation	As Constructed
File Name: 19339DES_Xsec.dgn	Date: / Comments / Init.	4670 N. Holly Denver, CO 80216 Phone: 303-398-6767 FAX: 303-398-6781	No Revisions:
Horiz. Scale: 1:30 Vert. Scale: As Noted		Region 1 KK	Revised:
LAWRENCE TSIOUVARAS SIMMONS HOLDERNESS CONSULTING ENGINEERS			Void:

I-70 OVER HAVANA STREET DESIGN-BUILD I-70 ROADWAY CROSS SECTIONS			Project No./Code
Designer: R. HARR	Structure Numbers		FBR 0704-230
Detailer: R. HARR			19339
Sheet Subset: XSEC	Subset Sheets: 16 of 23		Sheet Number X16

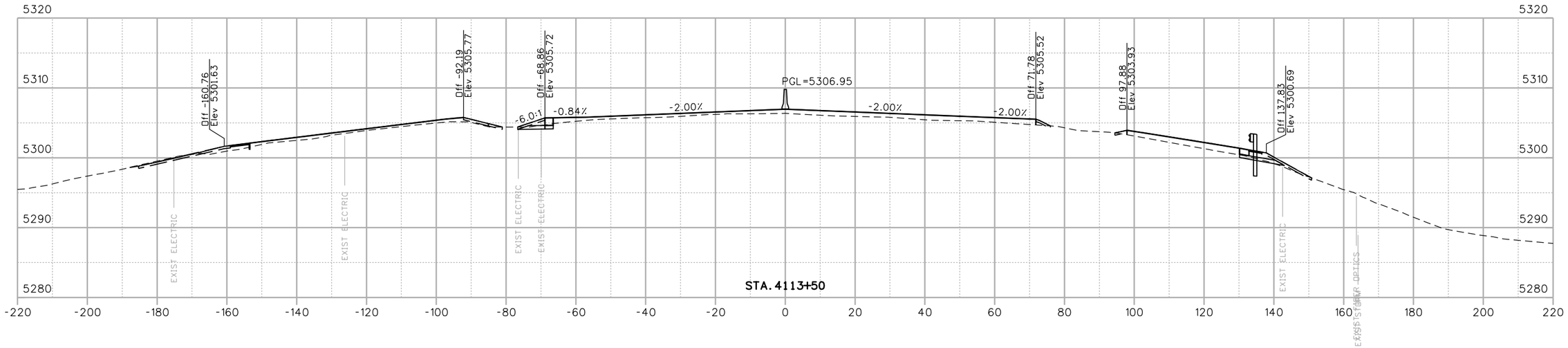

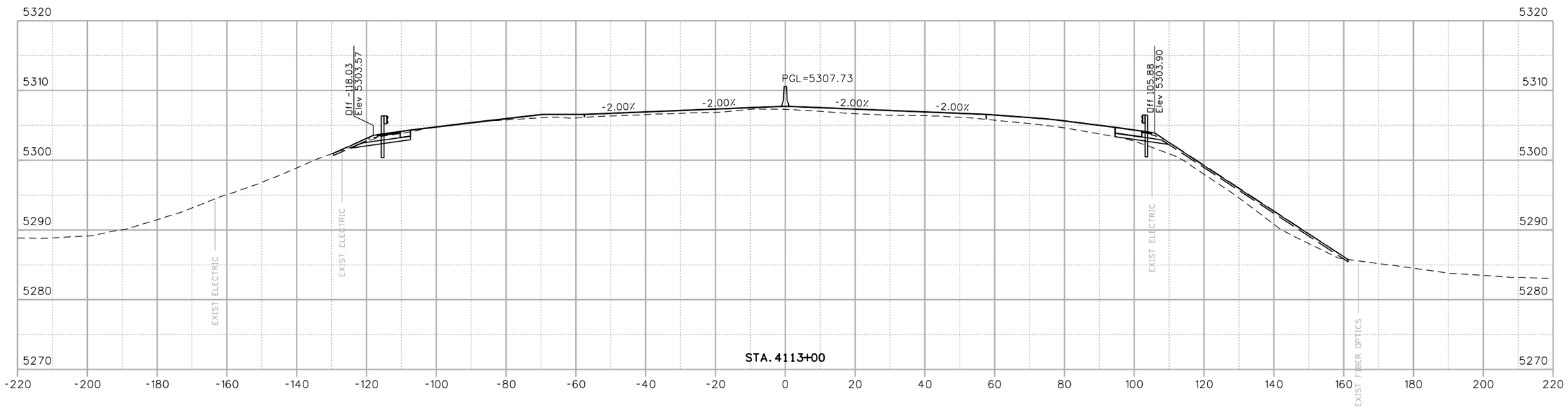

RFC02 JUNE, 2015 (REVIEW)

bob.harr 10:58:43 AM P:\130335408 - I-70 over Havana DB\19339\Design\Drawings\Cross_Sections\19339DES_Xsec.dgn

Print Date: 6/18/2015	Sheet Revisions	Colorado Department of Transportation	As Constructed
File Name: 19339DES_Xsec.dgn	Date: / Comments / Init.	4670 N. Holly, Denver, CO 80216, Phone: 303-398-6767 FAX: 303-398-6781	No Revisions:
Horiz. Scale: 1:30 Vert. Scale: As Noted		Region 1 KK	Revised:
LAWRENCE TSIOUVARAS SIMMONS HOLDERNESS CONSULTING ENGINEERS			Void:

I-70 OVER HAVANA STREET DESIGN-BUILD
I-70
ROADWAY CROSS SECTIONS

Designer:	R. HARR	Structure Numbers	
Detailer:	R. HARR		
Sheet Subset:	XSEC	Subset Sheets:	17 of 23

Project No./Code	
FBR 0704-230	
19339	
Sheet Number	X17

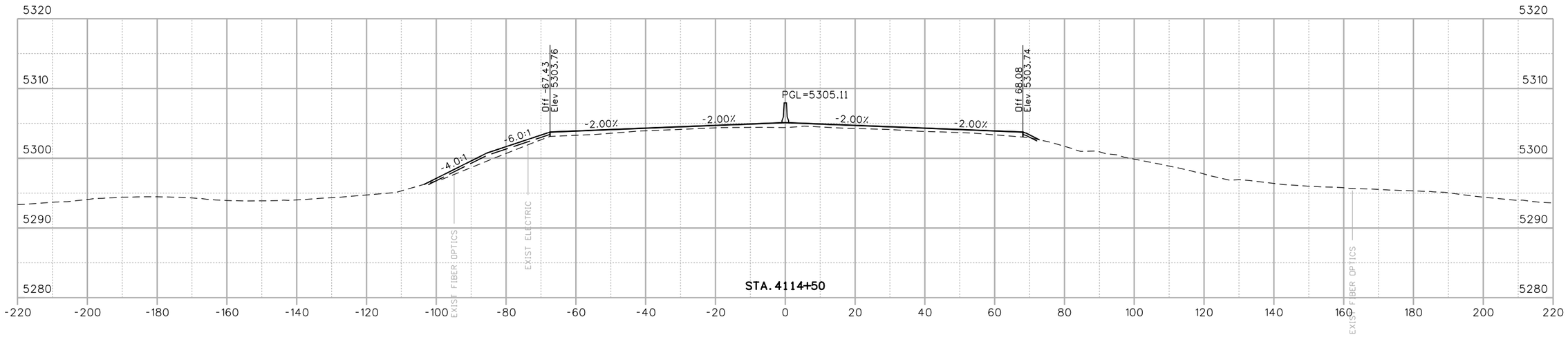

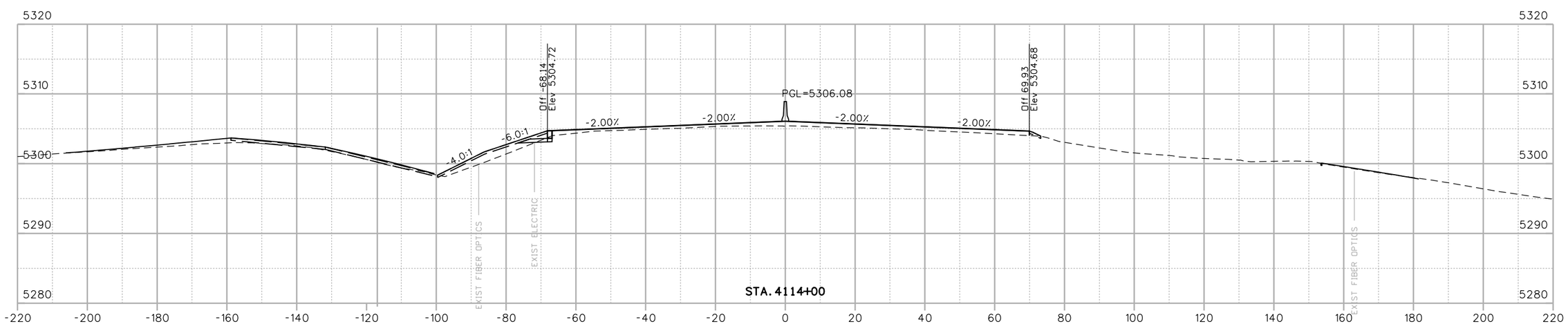

RFC02 JUNE, 2015 (REVIEW)

bob.harr 10:58:44 AM P:\1303354DB - I-70 over Havana DB\19339\Design\Drawings\Cross_Sections\19339DES_Xsec.dgn

Print Date: 6/18/2015	Sheet Revisions	Colorado Department of Transportation	As Constructed
File Name: 19339DES_Xsec.dgn	Date: / Comments / Init.	4670 N. Holly, Denver, CO 80216, Phone: 303-398-6767 FAX: 303-398-6781	No Revisions:
Horiz. Scale: 1:30 Vert. Scale: As Noted		Region 1 KK	Revised:
LAWRENCE TSIOUVARAS SIMMONS HOLDERNESS CONSULTING ENGINEERS			Void:

I-70 OVER HAVANA STREET DESIGN-BUILD
I-70
ROADWAY CROSS SECTIONS

Designer: R. HARR
Detailer: R. HARR
Sheet Subset: XSEC
Structure Numbers
Subset Sheets: 18 of 23

Project No./Code
FBR 0704-230
19339
Sheet Number X18

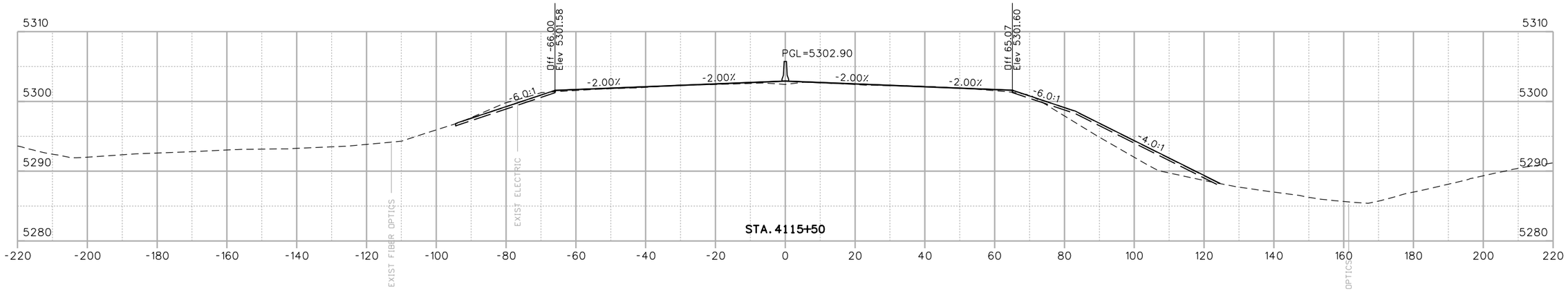

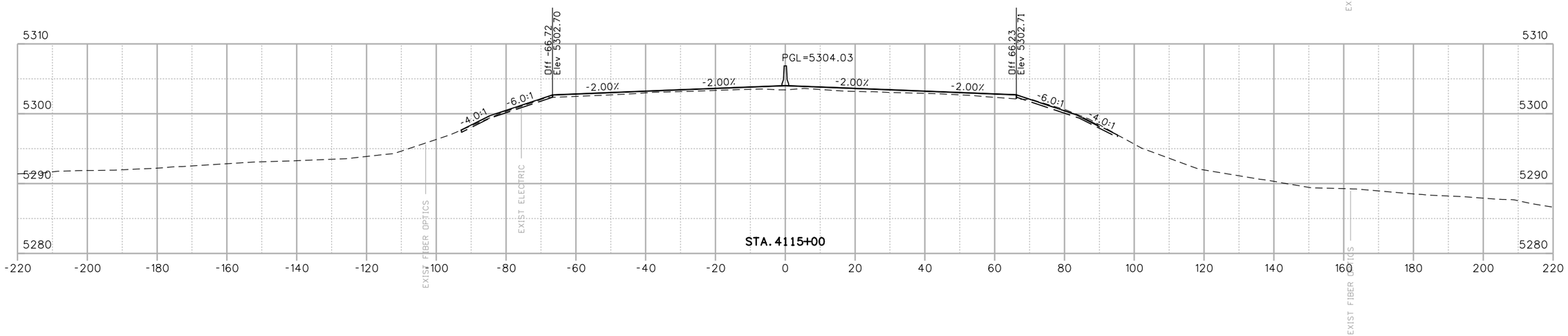

RFC02 JUNE, 2015 (REVIEW)

bob.harr 10:58:46 AM P:\1303354OB - I-70 over Havana DB\19339\Design\Drawings\Cross_Sections\19339DES_Xsec.dgn

Print Date: 6/18/2015	Sheet Revisions	Colorado Department of Transportation	As Constructed
File Name: 19339DES_Xsec.dgn	Date: / Comments / Init.	4670 N. Holly, Denver, CO 80216, Phone: 303-398-6767 FAX: 303-398-6781	No Revisions:
Horiz. Scale: 1:30 Vert. Scale: As Noted		Region 1 KK	Revised:
LAWRENCE TSIOUVARAS SIMMONS HOLDERNESS CONSULTING ENGINEERS			Void:

I-70 OVER HAVANA STREET DESIGN-BUILD
I-70
ROADWAY CROSS SECTIONS

Designer:	R. HARR	Structure Numbers	
Detailer:	R. HARR		
Sheet Subset:	XSEC	Subset Sheets:	19 of 23

Project No./Code	
FBR 0704-230	
19339	
Sheet Number	X19

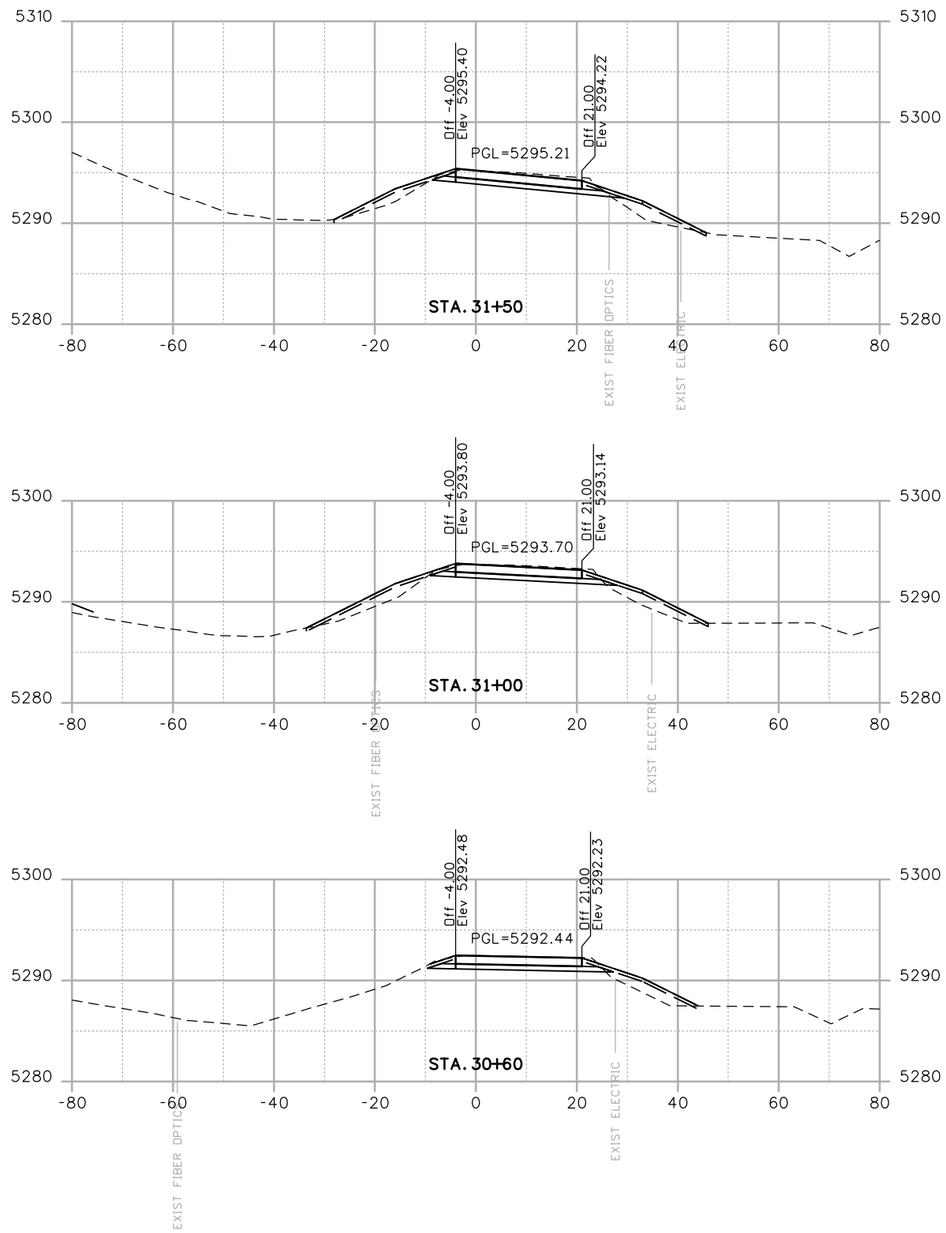

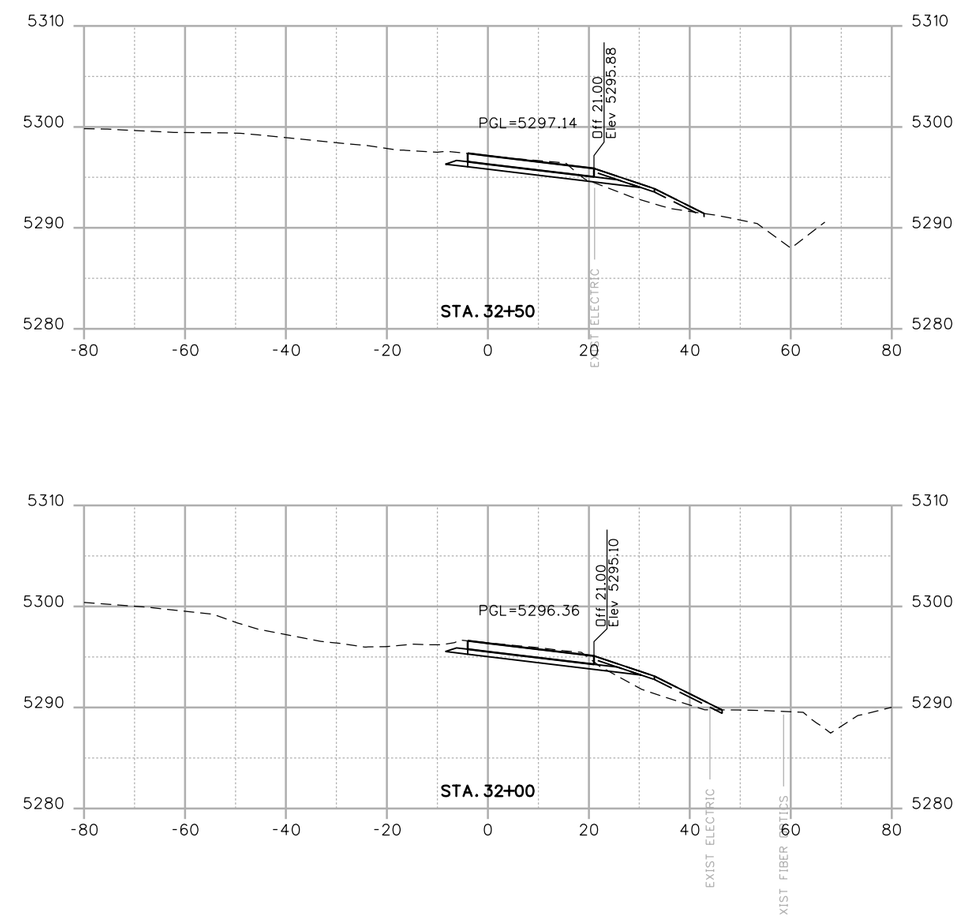

RFC02 JUNE, 2015 (REVIEW)

bob.harr 10:58:47 AM P:\13033540B - I-70 over Havana DB\19339\Design\Drawings\Cross_Sections\19339DES_Xsec.dgn

Print Date: 6/18/2015	Sheet Revisions	Colorado Department of Transportation	As Constructed
File Name: 19339DES_Xsec.dgn	Date: / Comments / Init.	4670 N. Holly, Denver, CO 80216, Phone: 303-398-6767 FAX: 303-398-6781	No Revisions:
Horiz. Scale: 1:30 Vert. Scale: As Noted		Region 1 KK	Revised:
LAWRENCE TSIOUVARAS SIMMONS HOLDERNESS CONSULTING ENGINEERS			Void:

I-70 OVER HAVANA STREET DESIGN-BUILD EB ON RAMP ROADWAY CROSS SECTIONS			Project No./Code
Designer: R. HARR	Structure Numbers		FBR 0704-230
Detailer: R. HARR			19339
Sheet Subset: XSEC	Subset Sheets: 20 of 23		Sheet Number X20

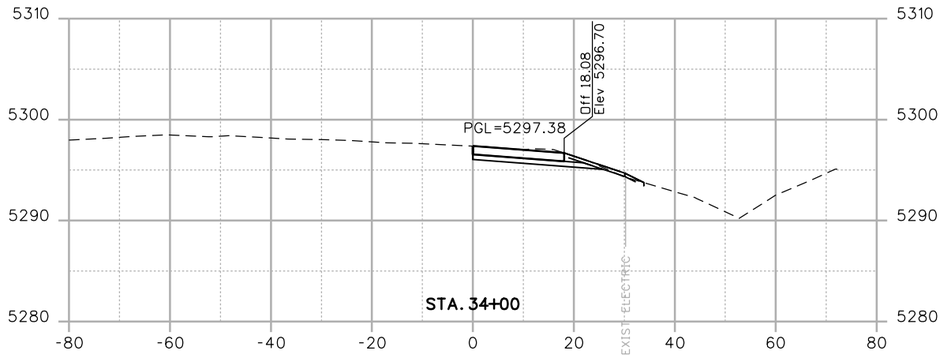

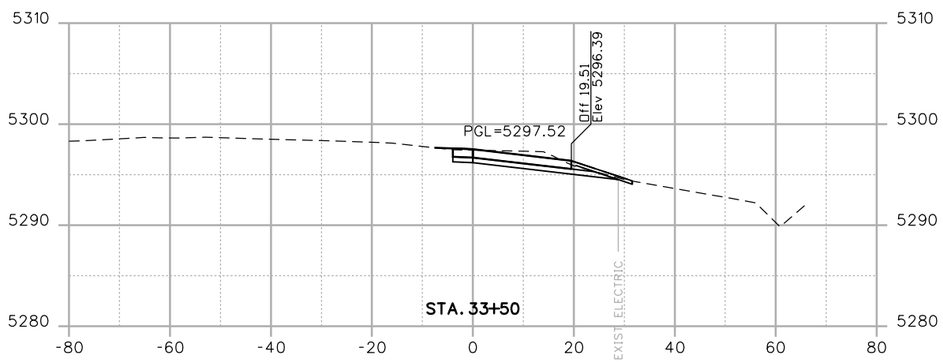

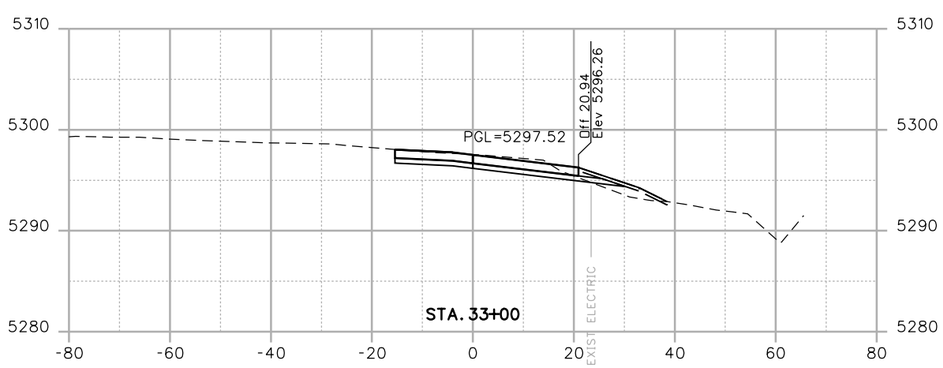

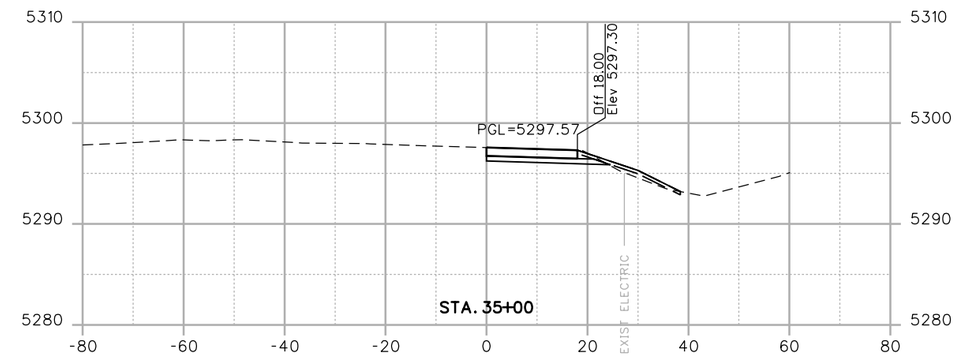

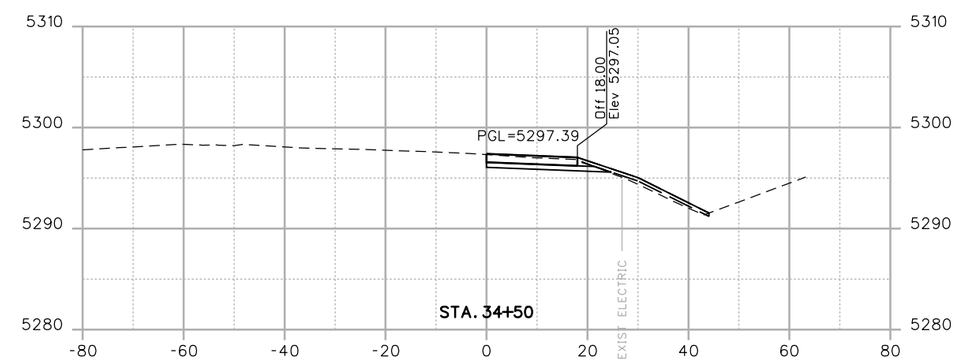

RFC02 JUNE, 2015 (REVIEW)

bob.harr 10:58:49 AM P:\130335408 - I-70 over Havana DB\19339\Design\Drawings\Cross_Sections\19339DES_Xsec.dgn

Print Date: 6/18/2015	Sheet Revisions		
File Name: 19339DES_Xsec.dgn	Date:	Comments	Init.
Horiz. Scale: 1:30 Vert. Scale: As Noted			

LAWRENCE
TSIOUVARAS SIMMONS HOLDERNESS
CONSULTING ENGINEERS

Colorado Department of Transportation
CDOT
4670 N. Holly
Denver, CO 80216
Phone: 303-398-6767 FAX: 303-398-6781
Region 1 KK

As Constructed
No Revisions:
Revised:
Void:

I-70 OVER HAVANA STREET DESIGN-BUILD
EB ON RAMP
ROADWAY CROSS SECTIONS

Designer:	R. HARR	Structure Numbers	
Detailer:	R. HARR		
Sheet Subset:	XSEC	Subset Sheets:	21 of 23

Project No./Code
FBR 0704-230
19339
Sheet Number X21

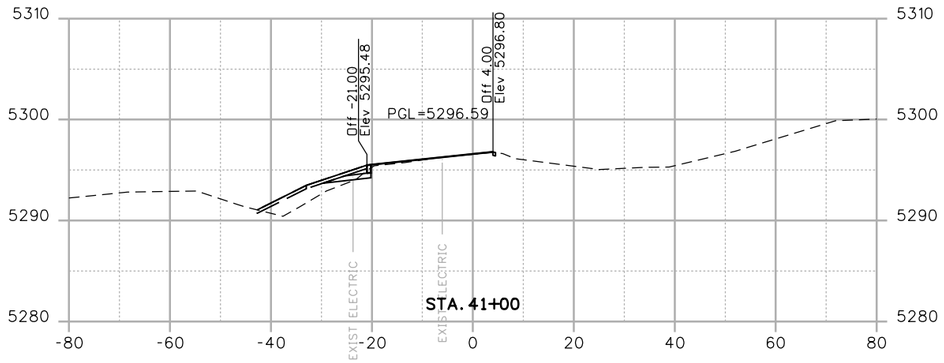

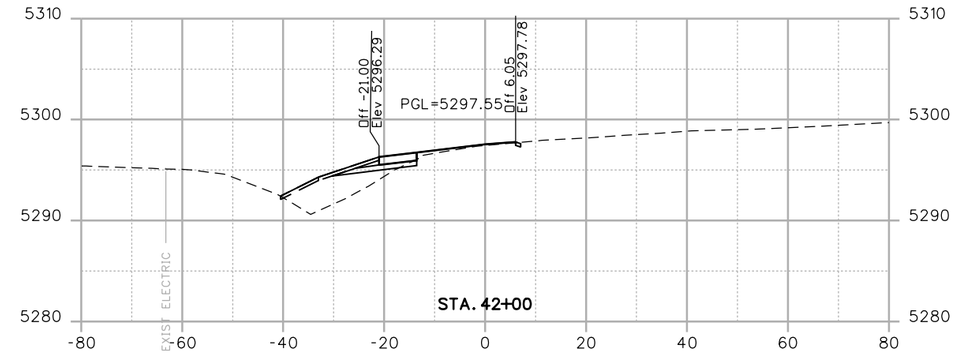

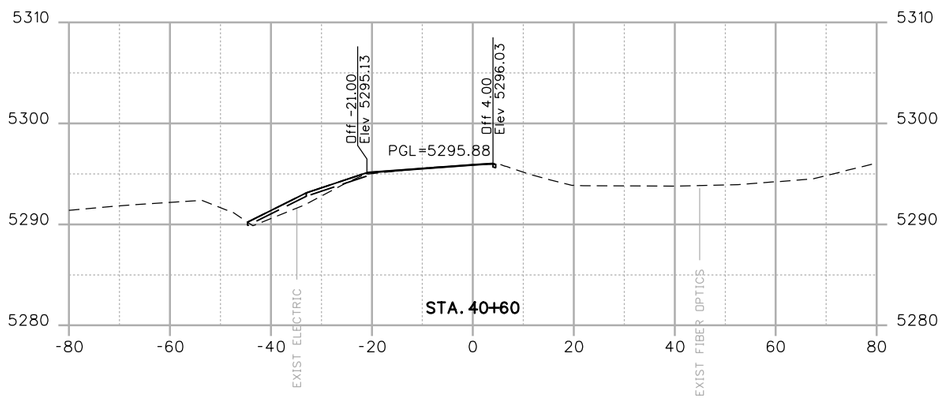

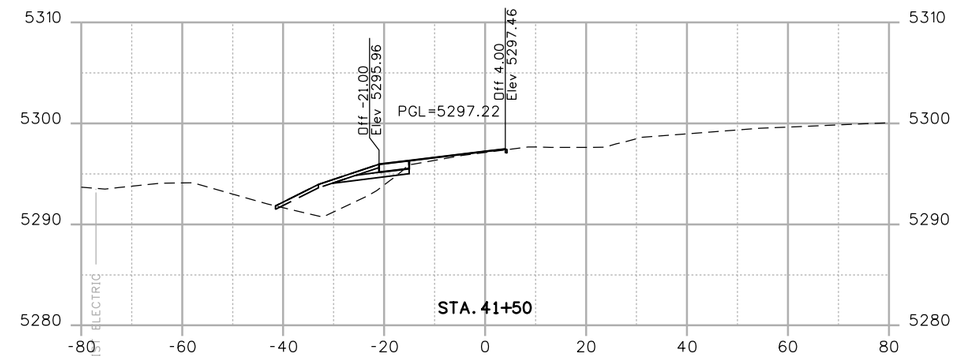

RFC02 JUNE, 2015 (REVIEW)

bob.harr 10:58:50 AM P:\13033540B - I-70 over Havana DB\19339\Design\Drawings\Cross_Sections\19339DES_Xsec.dgn

Print Date: 6/18/2015	Sheet Revisions	Colorado Department of Transportation	As Constructed
File Name: 19339DES_Xsec.dgn	Date: / Comments / Init.	4670 N. Holly, Denver, CO 80216, Phone: 303-398-6767 FAX: 303-398-6781	No Revisions:
Horiz. Scale: 1:30 Vert. Scale: As Noted		Region 1 KK	Revised:
LAWRENCE TSIOUVARAS SIMMONS HOLDERNESS CONSULTING ENGINEERS			Void:

I-70 OVER HAVANA STREET DESIGN-BUILD
WB OFF RAMP
ROADWAY CROSS SECTIONS

Designer: R. HARR
Detailer: R. HARR
Sheet Subset: XSEC
Structure Numbers
Subset Sheets: 22 of 23

Project No./Code
FBR 0704-230
19339
Sheet Number X22

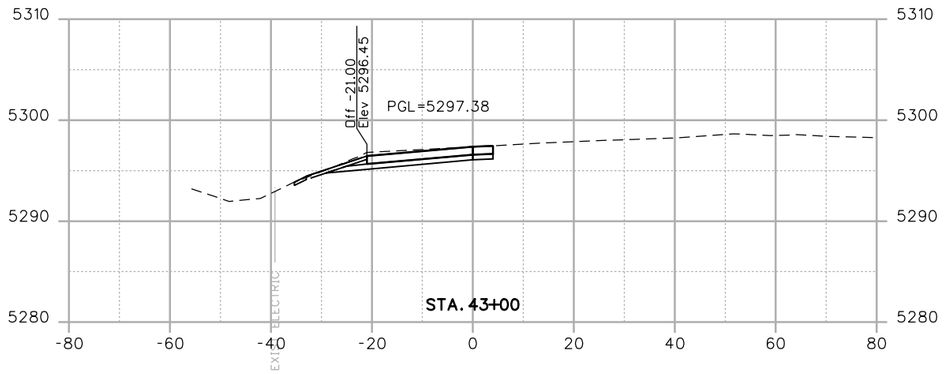

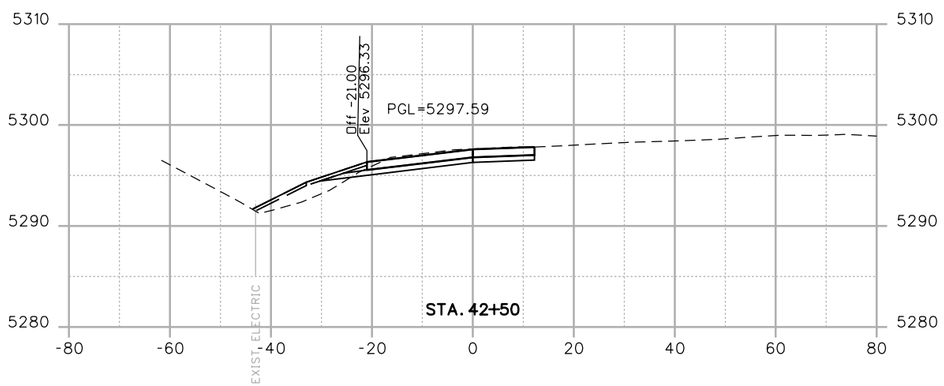

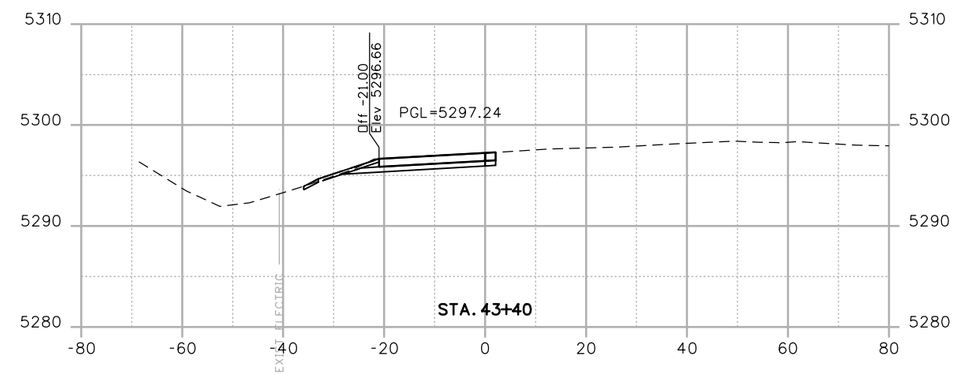

RFC02 JUNE, 2015 (REVIEW)

bob.harr 10:58:51 AM P:\13033540B - I-70 over Havana DB\19339\Design\Drawings\Cross_Sections\19339DES_Xsec.dgn

Print Date: 6/18/2015	Sheet Revisions	Colorado Department of Transportation	As Constructed
File Name: 19339DES_Xsec.dgn	Date: / Comments / Init.	4670 N. Holly, Denver, CO 80216, Phone: 303-398-6767 FAX: 303-398-6781	No Revisions:
Horiz. Scale: 1:30 Vert. Scale: As Noted		Region 1 KK	Revised:
LAWRENCE TSIOUVARAS SIMMONS HOLDERNESS CONSULTING ENGINEERS			Void:

I-70 OVER HAVANA STREET DESIGN-BUILD
WB OFF RAMP
ROADWAY CROSS SECTIONS

Designer:	R. HARR	Structure Numbers	
Detailer:	R. HARR		
Sheet Subset:	XSEC	Subset Sheets:	23 of 23

Project No./Code	
FBR 0704-230	
19339	
Sheet Number	X23