REVISIONS

FED. ROAD REG. NO.	DIVISION	PROJECT NO.	SHEET NO.	TOTAL SHEETS
9	COLO.	I70-4(33)289	17	

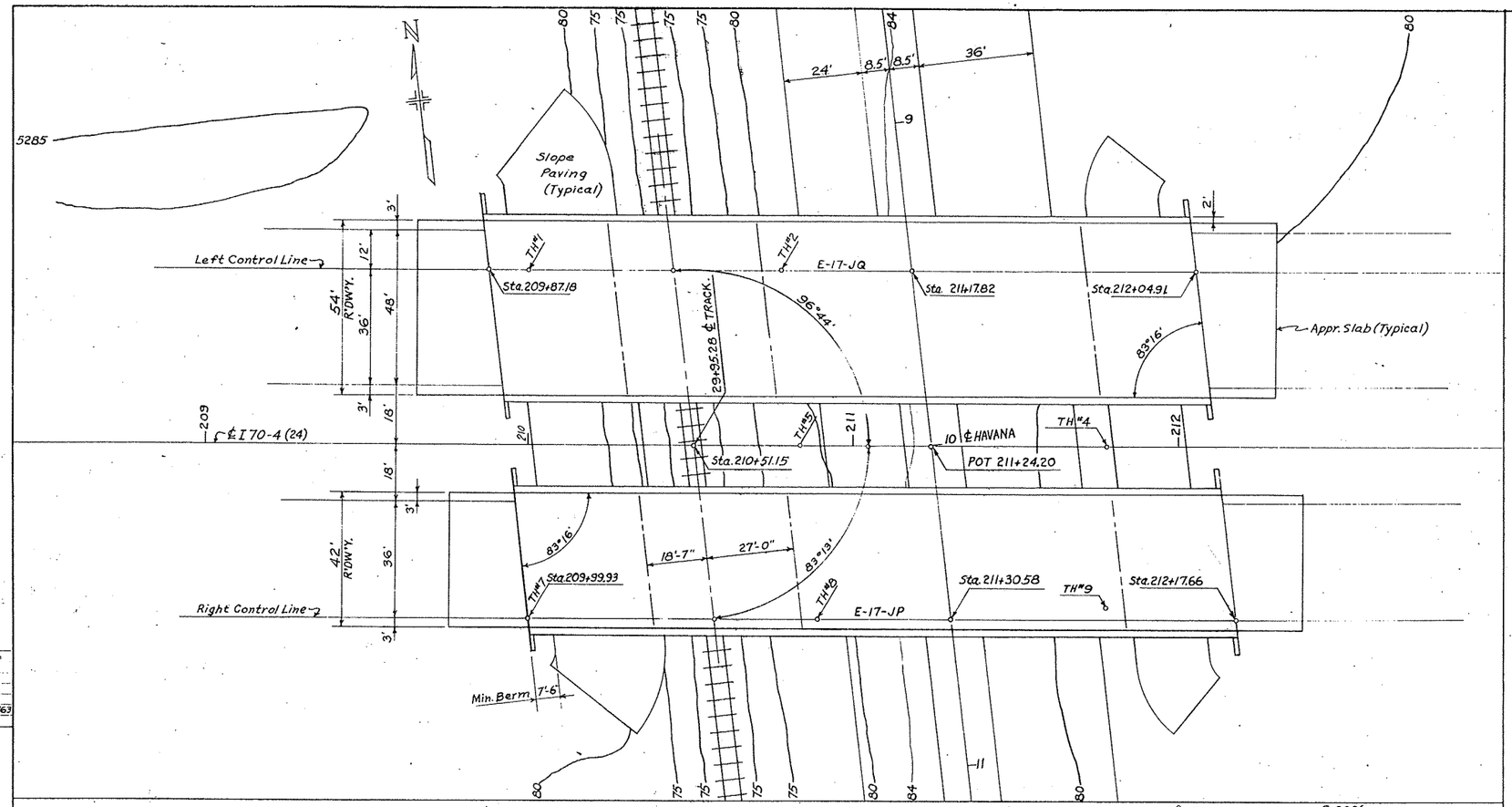

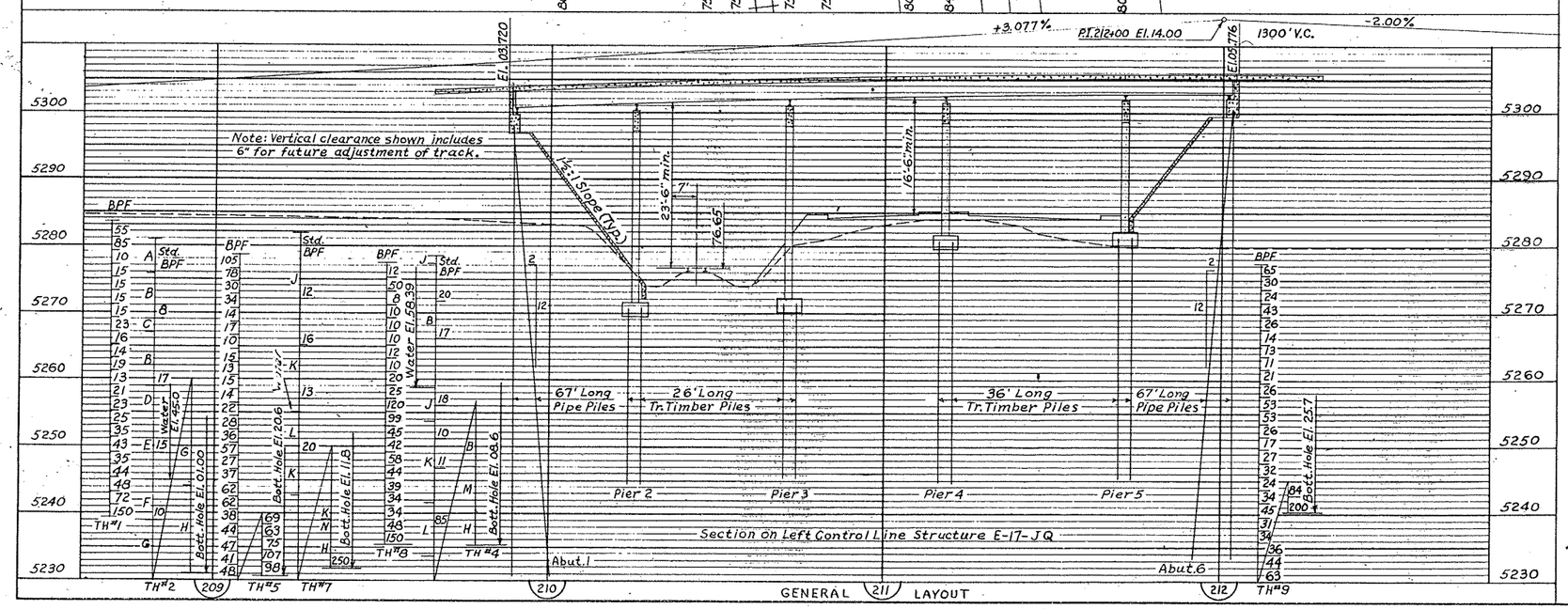

GENERAL LAYOUT

6 girders

" 7 5

5 girders

Soundings
A = Fine to medium sand.
B = Clayey sand.
C = Silty clayey sand.
D = Fine to coarse clayey sand.
E = Silty clay.
F = Fine to coarse sand.
G = Sand with thin gravel layers.
H = Denver blue shale.
J = Sand.
K = Sandy clay.
L = Gravelly sand.
M = Conglomerate sandstone.
N = Sand, gravel
BPF = Blows per foot.

GENERAL NOTES

ALL WORK SHALL BE DONE ACCORDING TO THE STANDARD SPECIFICATIONS OF THE COLORADO DEPARTMENT OF HIGHWAYS APPLICABLE TO THE PROJECT.
ALL CONCRETE SHALL BE CLASS "A".
ALL REINFORCING STEEL SHALL BE INTERMEDIATE GRADE STEEL OF A DEFORMED TYPE. EACH BAR SHALL BE TAGGED WITH THE BAR DESIGNATION AND STATION NUMBER OF THE PROJECT.
IF BY PERMISSION OF THE ENGINEER PRIMARY BARS ARE SPLICED, THEY SHALL LAP A MINIMUM OF 28 DIAMETERS FOR BARS NEAR TOPS OF BEAMS HAVING MORE THAN 12 INCHES OF CONCRETE UNDER THE BARS, AND 17 DIAMETERS FOR BARS NEAR BOTTOM OF MEMBERS. SECONDARY BARS WHEN SPLICED SHALL LAP 17 DIAMETERS OF THE BAR.
DIMENSIONS FOR REINFORCING STEEL NOT SHOWN AS CLEAR SHALL BE TO THE CENTERLINE OF THE BAR.
SOUNDINGS AND DEPTH OF FOOTINGS ARE IN ACCORDANCE WITH THE BEST AVAILABLE DATA, AND WHEN DIFFERENT CONDITIONS ARE ENCOUNTERED THE BRIDGE ENGINEER WILL INSPECT AND DETERMINE IF REDESIGN IS NECESSARY.
FOOTINGS IN ROCK SHALL BE FOURED OUT TO ROCK AND NOT FORMED.
WHEN EXCAVATING FOR FOOTINGS THE FINAL ONE FOOT IN DEPTH SHALL BE DONE BY HAND-LABOR METHODS.
FOR DETAILS OF STRUCTURAL EXCAVATION AND STRUCTURE BACKFILL, SEE STANDARD M-16-A
ALL CONCRETE SURFACES MARKED WITH THE SYMBOL / AS SHOWN ON SHEET NO. 32 SHALL RECEIVE CLASS "1" SURFACE FINISH.
ALL STRUCTURAL STEEL SHALL BE PAINTED WITH ONE SHOP COAT OF ZINC CHROMATE AND TWO FIELD COATS OF ALUMINUM PAINT UNLESS OTHERWISE NOTED.
ALL RIVETS SHALL BE ¾ INCH DIAMETER UNLESS OTHERWISE NOTED.
HIGH TENSILE BOLTS MAY BE SUBSTITUTED FOR FIELD RIVETS AT THE CONTRACTORS OPTION. BOLTS SHALL BE FURNISHED IN THE AMOUNT OF FIVE PERCENT IN EXCESS OF THE NOMINAL NUMBER REQUIRED FOR EACH SIZE AND LENGTH.
WELDING SHALL CONFORM TO THE LATEST EDITION OF THE A.W.S. STANDARD SPECIFICATIONS FOR WELDING HIGHWAY BRIDGES.
FOR WELDED GIRDERS ALL SHOP BUTT WELDS IN FLANGES AND WEBS SHALL BE MADE BEFORE WELDING INTO GIRDER.
WHEN CALLED FOR IN THE SPECIAL PROVISIONS, SHOP WELDS SHALL BE INSPECTED RADIOGRAPHICALLY AND BY THE PENETRANT DYE METHOD.
WHEN TREATED TIMBER PILING IS SHOWN ON THE PLANS, THE PRESERVATIVE FOR TREATMENT SHALL BE CREOSOTE OIL.
ALL STRUCTURAL STEEL NOT OTHERWISE NOTED SHALL BE ASTM A36-62T.

* Sta. 209+87.18 to 212+04.91 E-17-JQ
Sta. 209+99.93 to 212+17.66 E-17-JP

E-17-JQ West Bound
STRUCTURE NO. E-17-JP East Bound

LOADING DATA. INTERSTATE ALTERNATE
LIVE LOAD A. A. S. H. O. H20-S16-44
DEAD LOAD = ASSUMES 15 LBS. PER SQ. FT. ADDITIONAL WEARING SURFACE WHICH INCLUDES THE ½ INCH CONCRETE MONOLITHIC WEARING SURFACE SHOWN.

DESIGNING DATA.
A. A. S. H. O. 1944 UNIT STRESSES.
f_c 1,200 Lbs. per Sq. In.
f_s 20,000 Lbs. per Sq. In. (Reinf. & Struct. A-36 Steel)
n = 10.
f_s = 18,000 Lbs. per Sq. In. (Struct. A-7 Steel)

COLORADO
DEPARTMENT OF HIGHWAYS
5 SPAN (37'-46'-46'-54'-31.5') STEEL GIRDER & CONC. SLAB BRIDGE
42' & 54' R'DWY. 2' CURBS 83°16' SKEW
GENERAL LAYOUT & NOTES

Across HAVANA STREET
Sta. *
Near Denver Sec. 24 T. 36 R. 67W

Designed by	Approved by Adams Gelt
Made by	Bridge Engineer
Checked by	Date: June 17, 1963

D.S.M. MAY '63

REVISIONS

Initial	Date
DCL	6-63
MEP	6-63

FED. ROAD REG. NO.	DIVISION	PROJECT NO.	SHEET NO.	TOTAL SHEETS
9	COLO.	I 70-4(33)288	18	

SUMMARY OF QUANTITIES — STRUCTURE E-17-JP

ITEM NO.	DESCRIPTION	UNIT	SUPER STRUCT.	ABUT. NO. 1	PIER NO. 2	PIER NO. 3	PIER NO. 4	PIER NO. 5	ABUT NO. 6	TOTAL
14	UNCLASSIFIED STRUCTURAL EXCAVATION-BRIDGE	CU. YD.	—	5	33	56	36	—	5	135
16	STRUCTURE BACKFILL (CLASS X)	CU. YD.	—	32	41	44	23	—	28	170
46	CLASS A CONCRETE	CU. YD.	277.7	23.5	26.8	26.8	23.6	23.6	19.0	421
47	REINFORCING STEEL (INCL. 1% FOR OVERRUN)	LBS.	62,395	2,925	3,910	3,910	3,105	3,105	2,740	90090
(5) 48	STRUCTURAL STEEL (INCL. ½% FOR PAINT)	LBS.	157,800	330	520	520	520	520	330	160,540
(3) 60	DRILLING HOLES TO FACILITATE PILE DRIVING	LIN. FT.	—	62	—	—	—	—	88	150
(1) 61	STEEL PIPE PILING - 12 3/8" OD × 0.219" WALL	LIN. FT.	—	268	—	—	—	—	268	536
65	CONCRETE SLOPE AND DITCH PAVING w/WIRE MESH	CU. YD.	—	46	—	—	—	—	34	80
80	TREATED TIMBER PILING	LIN. FT.	—	—	468	468	648	648	—	2,232
80	SHEET COPPER (32 OZ.)	LBS.	7	—	—	—	—	—	—	7
90	1½" ⌀ ELECTRICAL CONDUIT w/ JUNCTION BOXES	LIN. FT.	294	—	—	—	—	—	—	294
(4)	16 GA. GALV. SHEET METAL	SQ. FT.	70	—	—	—	—	—	—	70
(6)	½" EXPANSION JOINT MATERIAL, TYPE III	SQ. FT.	165	—	—	—	—	—	5	170

SUMMARY OF QUANTITIES — STRUCTURE E-17-JQ

ITEM NO.	DESCRIPTION	UNIT	SUPER STRUCT.	ABUT. NO. 1	PIER NO. 2	PIER NO. 3	PIER NO. 4	PIER NO. 5	ABUT. NO. 6	TOTAL
14	UNCLASSIFIED STRUCTURAL EXCAVATION-BRIDGE	CU. YD.	—	5	37	83	40	—	5	190
16	STRUCTURE BACKFILL (CLASS X)	CU. YD.	—	40	48	72	31	—	34	225
46	CLASS "A" CONCRETE	CU. YD.	341.8	28.2	31.5	31.5	28.3	28.3	23.4	513
47	REINFORCING STEEL (INCL. 1% FOR OVERRUN)	LBS.	82,210	3685	7,205	7,205	6,400	6,400	3,460	116,565
(5) 48	STRUCTURAL STEEL (INCL. ½% FOR PAINT)	LBS.	189,230	395	620	620	620	620	395	192,500
60	TREATED TIMBER PILING	LIN. FT.	—	—	468	468	648	648	—	2,232
(3) 60	DRILLING HOLES TO FACILITATE PILE DRIVING	LIN. FT.	—	65	—	—	—	—	98	163
(2) 61	STEEL PIPE PILING - 12 3/8" O.D. × 0.219" WALL	LIN. FT.	—	335	—	—	—	—	335	670
65	CONCRETE SLOPE AND DITCH PAVING w/WIRE MESH	CU. YD.	—	55	—	—	—	—	35	90
80	SHEET COPPER (32 OZ)	LBS.	7	—	—	—	—	—	—	7
90	1½" ELECTRICAL CONDUIT w/ JUNCTION BOXES	LIN. FT.	298	—	—	—	—	—	—	298
(4)	16 GA. GALV. SHEET METAL	SQ. FT.	88	—	—	—	—	—	—	88
(6)	½" EXPANSION JOINT MATERIAL, TYPE III	SQ. FT.	201	—	—	—	—	—	5	206

NOTES

(1) INCLUDES 16.4 CU. YD. OF CLASS "A" CONCRETE TO FILL PILES.
(2) INCLUDES 20.6 CU. YD OF CLASS "A" CONCRETE TO FILL PILES.
(3) HOLES FOR PILES SHALL NOT BE DRILLED UNTIL DEFINITELY DETERMINED BY THE ENGINEER THAT THE PILES CANNOT BE DRIVEN.
(4) TO BE INCLUDED IN THE BID PRICE OF ITEM 46.
(5) INCLUDES 15,935 LBS. OF HANDRAIL STEEL.
(6) EXPANSION JOINT MATERIAL SHALL BE IN ACCORDANCE TO A.A.S.H.O. SPECIFICATION M-153-54 AND OF THE TYPE SHOWN AND SHALL BE INCLUDED IN THE BID PRICE FOR ITEM 46.

* Sta. 209+87.18 To 212+04.91 E-17-JQ
* Sta 209+99.93 To 212+17.66 E-17-JP

STRUCTURE NO. E-17-JQ West Bound
E-17-JP East Bound

COLORADO
DEPARTMENT OF HIGHWAYS
SUMMARY
OF
QUANTITIES

Across HAVANA STREET
Sta.
Near DENVER Sec. 24 T. 3S R. 67W

Designed by
Made by
Checked by

Approved by [signature]
Bridge Engineer
Date: 17 JUNE 1969

HIGHWAYS

FACING PLAIN

INITIAL	DATE

REVISIONS

BENDING DIAGRAMS

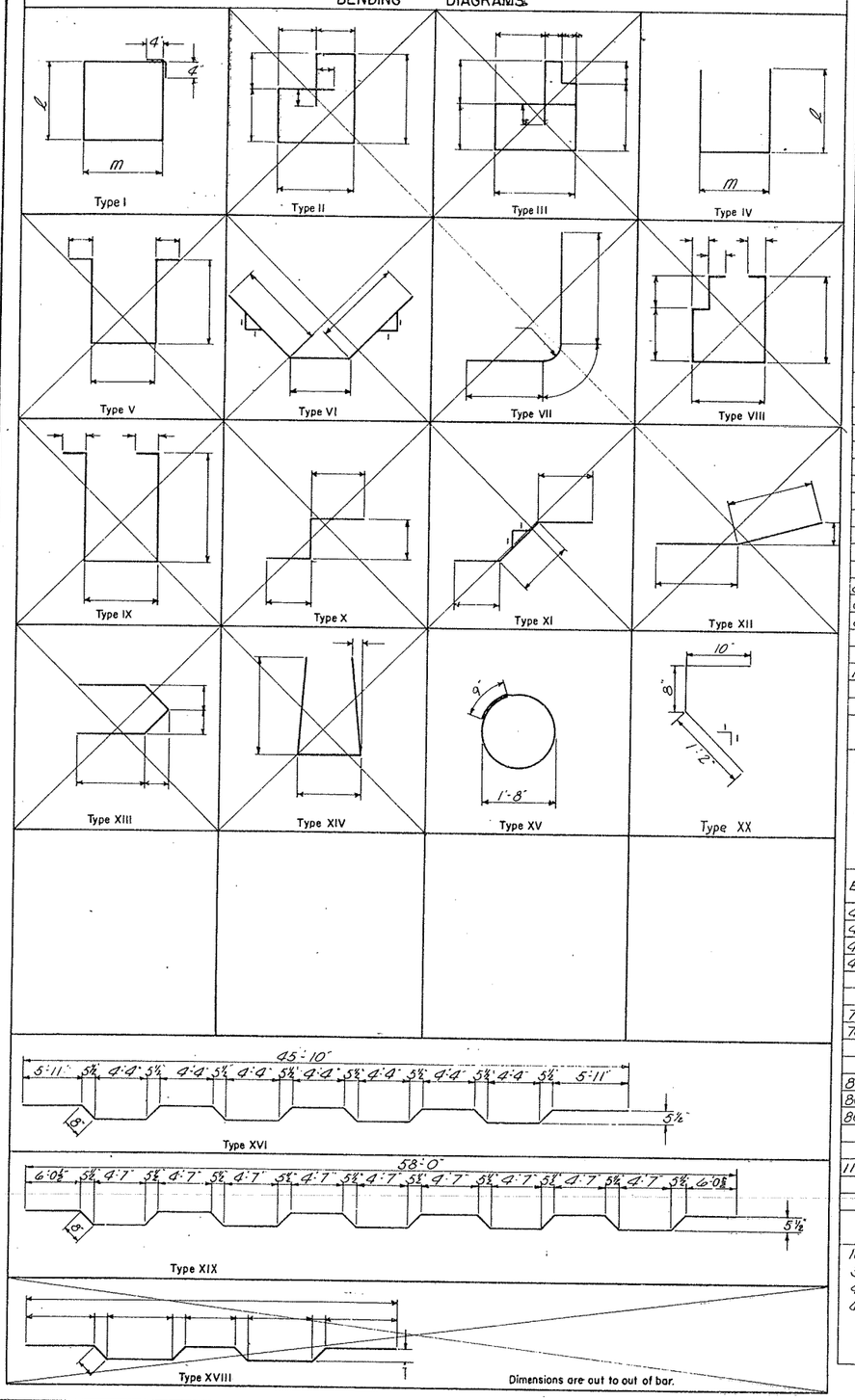

Dimensions are out to out of bar.

Superstructure E-17-JQ

Mark	Size	No Req'd	Length	Type	Dimensions ℓ	Dimensions m
401	½"ϕ	152	5'-0"	I	1'-3"	0'-11"
402	½"ϕ	432	4'-6"	IV	1'-5"	1'-8"
501	⅝"ϕ	670	58'-0"	Str.		
502		283	60'-0"	XIX		
503		123	36'-10"	Str.		
504		246	45'-6"	Str.		
505		123	53'-6"	Str.		
506	⅝"ϕ	123	32'-3"	Str.		

Summary

2704 Lin Ft ½"ϕ @ 0.668 PLF = 1806 lb.
76311 Lin Ft ⅝"ϕ @ 1.043 PLF = 79592 lb.
1% ± for overrun = 812 lb.
Total = 82210 lb.

E-17-JQ Pier No. 2 (Pier 3 Similar)

Mark	Size	No Req'd	Length	Type	Dimensions ℓ	Dimensions m
403	½"ϕ	78	6'-0"	XV		
404	½"ϕ	8	26'-6"	Str.		
405	½"ϕ	16	10'-8"	I	3'-3"	1'-9"
406	½"ϕ	104	9'-6"	I	3'-3"	1'-2"
701	⅞"ϕ	33	5'-0"	Str.		
702	⅞"ϕ	33	7'-0"	Str.		
801	1"ϕ	21	3'-9"	Str.		
802	1"ϕ	21	26'-8"	Str.		
804	1"ϕ	2	12'-0"	Str.		
1101	1⅜"ϕ	12	52'-2"	Str.		

Summary

1839 Lin Ft. ½"ϕ @ 0.668 PLF = 1228 lb.
396 Lin Ft. ⅞"ϕ @ 2.044 PLF = 809 lb.
663 Lin Ft 1"ϕ @ 2.670 PLF = 1770 lb.
626 Lin Ft 1⅜"ϕ 5.313 PLF = 3326 lb.
1% ± overrun = 72 lb.
Total = 7205 lb.

E-17-JQ Pier No. 4 (Pier 5 Similar)

Mark	Size	No Req'd	Length	Type	Dimensions ℓ	Dimensions m
403	½"ϕ	51	6'-0"	XV		
404	½"ϕ	8	26'-6"	Str.		
405	½"ϕ	16	10'-8"	I	3'-3"	1'-9"
406	½"ϕ	104	9'-6"	I	3'-3"	1'-2"
701	⅞"ϕ	33	5'-0"	Str.		
702	⅞"ϕ	33	7'-0"	Str.		
801	1"ϕ	18	3'-9"	Str.		
803	1"ϕ	18	17'-6"	Str.		
804	1"ϕ	2	12'-0"	Str.		
1101	1⅜"ϕ	12	52'-2"	Str.		

Summary

1677 Lin Ft ½"ϕ @ 0.668 PLF = 1120 lb
396 Lin Ft ⅞"ϕ @ 2.044 PLF = 809 lb.
406 Lin Ft 1"ϕ @ 2.670 PLF = 1084 lb.
626 Lin Ft 1⅜"ϕ @ 5.313 PLF = 3326 lb.
1% ± overrun = 61 lb.
Total = 6400 lb

Abut. No. 1 E-17-JQ

Mark	Size	No Req'd	Length	Type	Dimensions ℓ	Dimensions m
407	½"ϕ	92	9'-10"	I	2'-2"	2'-5"
408		4	26'-9"	Str.		
409		36	10'-8"	IV	5'-0"	0'-8"
410		36	2'-8"	XX		
411		4	6'-6"	Str.		
412		28	7'-6"			
413		12	27'-5"			
414		4	6'-10"			
415		16	8'-0"			
416	½"ϕ	12	9'-0"	Str.		
603	¾"ϕ	2	54'-0"	Str.		
1001	1⅛"ϕ	10	52'-8"	Str.		

Summary

1828 Lin Ft ½"ϕ @ 0.668 PLF = 1221 lb.
108 Lin Ft ¾"ϕ @ 1.502 PLF = 162 lb.
527 Lin Ft 1⅛"ϕ @ 4.303 PLF = 2268 lb
1% ± overrun = 34 lb.
Total = 3685 lb

Abut. No. 6 E-17-JQ

Mark	Size	No Req'd	Length	Type	Dimensions ℓ	Dimensions m
407	½"ϕ	92	9'-10"	I	2'-2"	2'-5"
408		4	26'-9"	Str.		
416		12	9'-0"	Str.		
417		36	7'-8"	IV	3'-6"	0'-8"
418		8	34'-10"	Str.		
419		20	4'-10"	Str.		
420	½"ϕ	20	6'-10"	Str.		
604	¾"ϕ	4	34'-10"	Str.		
1001	1⅛"ϕ	10	52'-8"	Str.		

Summary

1419 Lin. Ft. ½"ϕ @ 0.668 PLF = 948 lb.
139 Lin. Ft. ¾"ϕ @ 1.502 PLF = 209 lb.
527 Lin. Ft. 1⅛"ϕ @ 4.303 PLF = 2268 lb.
1% ± overrun = 35 lb
Total = 3460 lb.

Superstructure E-17-JP

Mark	Size	No. Req'd	Length	Type	Dimension ℓ	Dimension m
401	½"ϕ	152	5'-0"	I	1'-3"	0'-11"
402	½"ϕ	432	4'-6"	IV	1'-5"	1'-8"
503	⅝"ϕ	102	36'-10"	Str.		
504		204	45'-6"	Str.		
505		102	53'-6"	Str.		
506		102	32'-3"	Str.		
551		516	45'-10"	Str.		
552	⅝"ϕ	254	47'-6"	XVI		

Summary

2704 Lin Ft ½"ϕ @ 0.668 PLF = 1806 lb.
57500 Lin Ft ⅝"ϕ @ 1.043 PLF = 59 972 lb.
1% ± overrun = 617 lb
Total = 62,395 lb.

E-17-JP Pier No. 2 (Pier 3 Similar)

Mark	Size	No Req'd	Length	Type	Dimensions ℓ	Dimensions m
403	½"ϕ	78	6'-0"	XV		
454	½"ϕ	4	40'-0"	Str.		
455	½"ϕ	32	9'-8"	I	2'-9"	1'-9"
456	½"ϕ	28	8'-6"	I	2'-9"	1'-2"
701	⅞"ϕ	33	5'-0"	Str.		
702	⅞"ϕ	33	7'-0"	Str.		
801	1"ϕ	21	3'-9"	Str.		
802	1"ϕ	21	26'-8"	Str.		
1151	1⅜"ϕ	12	40'-0"	Str.		

Summary

1175 Lin Ft ½"ϕ @ 0.668 PLF = 785 lb.
396 Lin Ft ⅞"ϕ @ 2.044 PLF = 809 lb.
639 Lin Ft. 1"ϕ @ 2.670 PLF = 1706 lb.
480 Lin Ft 1⅜"ϕ @ 5.313 PLF = 2550 lb.
1% ± overrun = 60 lb
Total = 5910 lb

E-17-JP Pier No. 4 (Pier 5 Similar)

Mark	Size	No Req'd	Length	Type	Dimensions ℓ	Dimensions m
403	½"ϕ	51	6'-0"	XV		
454	½"ϕ	4	40'-0"	Str.		
455	½"ϕ	32	9'-8"	I	2'-9"	1'-9"
456	½"ϕ	28	8'-6"	I	2'-9"	1'-2"
701	⅞"ϕ	33	5'-0"	Str.		
702	⅞"ϕ	33	7'-0"	Str.		
801	1"ϕ	18	3'-9"	Str.		
803	1"ϕ	18	17'-6"	Str.		
1151	1⅜"ϕ	12	40'-0"	Str.		

Summary

1013 Lin Ft ½"ϕ @ 0.668 PLF = 677 lb.
396 Lin Ft ⅞"ϕ @ 2.044 PLF = 809 lb.
382 Lin Ft. 1"ϕ @ 2.670 PLF = 1020 lb.
480 Lin Ft. 1⅜"ϕ @ 5.313 PLF = 2550 lb
1% ± Overrun = 49 lb
Total = 5105 lb.

FED. ROAD REG. NO	DIVISION	PROJECT NO.	SHEET NO.	TOTAL SHEETS
9	COLO.	I 70-4 (33)288	19	

Abut. No. 1 E-17-JP

Mark	Size	No Req'd	Length	Type	Dimensions ℓ	Dimensions m
407	½"ϕ	32	9'-10"	I	2'-2"	2'-5"
409		28	10'-8"	IV	5'-0"	0'-8"
410		28	2'-8"	XX		
411		4	6'-6"	Str.		
412		28	7'-6"			
414		4	6'-10"			
415		16	8'-0"			
416		12	9'-0"			
460		4	20'-9"			
461	½"ϕ	12	21'-5"	Str.		
605	¾"ϕ	2	42'-0"	Str.		
1002	1⅛"ϕ	10	40'-8"	Str.		

Summary

1527 Lin Ft ½"ϕ @ 0.668 PLF = 1020 lb.
84 Lin Ft ¾"ϕ @ 1.502 PLF = 126 lb.
407 Lin Ft 1⅛"ϕ @ 4.303 PLF = 1751 lb.
1% ± Overrun = 28 lb
Total = 2925 lb.

Abut. No. 6 E-17-JP

Mark	Size	No Req'd	Length	Type	Dimensions ℓ	Dimensions m
407	½"ϕ	32	9'-10"	I	2'-2"	2'-5"
416		12	9'-0"	Str.		
417		28	7'-8"	IV	3'-6"	0'-8"
419		20	4'-10"	Str.		
420		20	6'-10"	Str.		
460		4	20'-9"	Str.		
462	½"ϕ	8	28'-9"	Str.		
606	¾"ϕ	2	56'-8"	Str.		
1002	1⅛"ϕ	10	40'-8"	Str.		

Summary

1187 Lin Ft ½"ϕ @ 0.668 PLF = 793 lb
113 Lin Ft ¾"ϕ @ 1.502 PLF = 170 lb
407 Lin Ft 1⅛"ϕ @ 4.303 PLF = 1751 lb
1% ± overrun = 26 lb
Total = 2740 lb

★ Sta. 209+87.18 to 212+04.91 E-17-JQ West Bound
★ Sta. 209+99.93 to 212+17.66 E-17-JP East Bound

STRUCTURE NO. E-17-JQ & JP

COLORADO
DEPARTMENT OF HIGHWAYS

BENDING DIAGRAMS & BAR LIST

Across Havana St
Sta. ★
Near Denver Sec. 24 T. 3S R. 67W

Designed by
Made by J.B.
Checked by

Approved by [signature]
Bridge Engineer
Date: June 7, 1963

DEPT. OF HIGHWAYS
C.D.H. 117
1962

REVISIONS

FED. ROAD REG. NO.	DIVISION	PROJECT NO.	SHEET NO.	TOTAL SHEETS
9	COLO.	I 70-4(33)288	20	

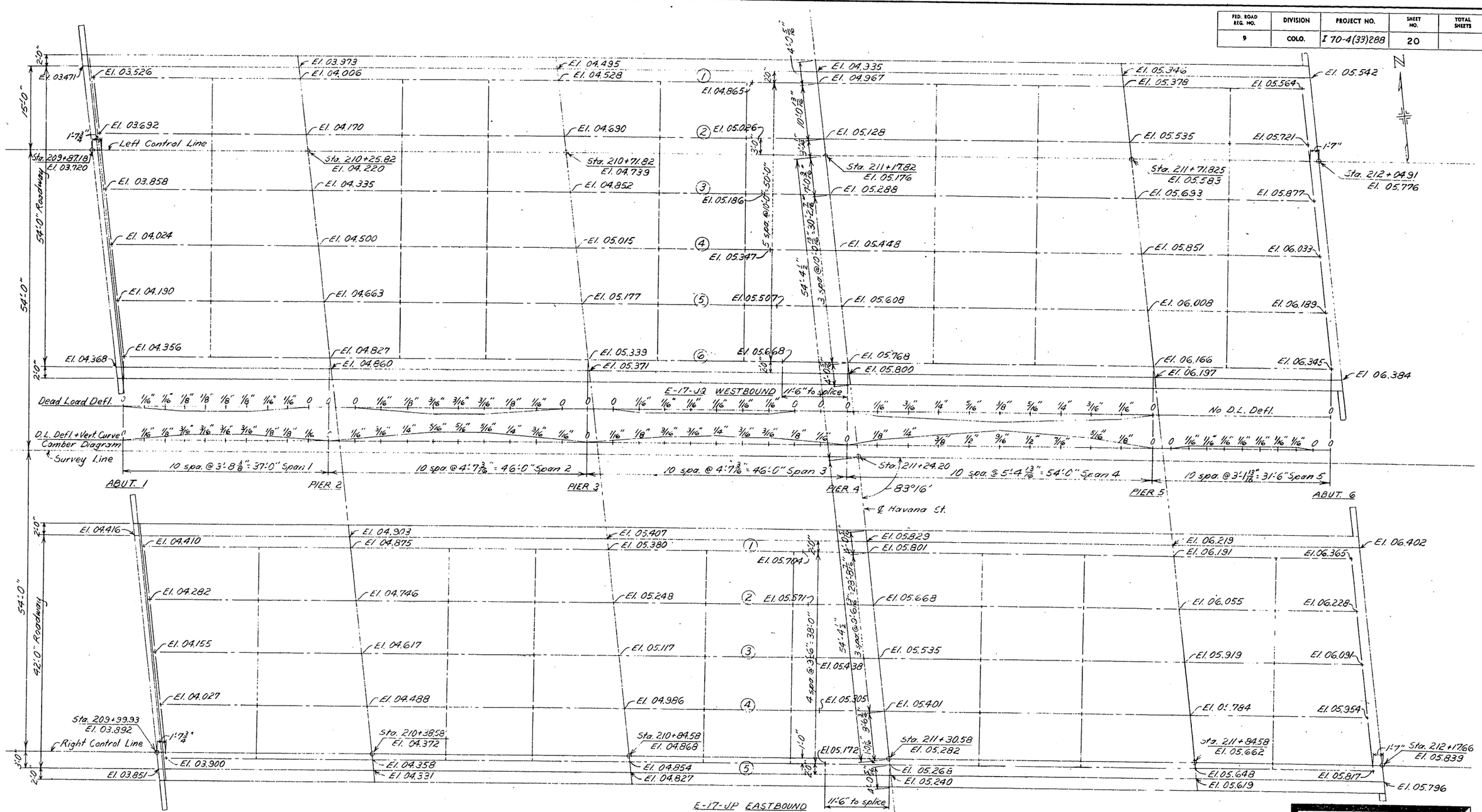

Note: Elevations are at finish grade.
Piers and abuts are parallel to ℄ Havana St.

Sta. 209+87.18 to 212+04.91 E-17-JQ WESTBOUND
Sta. 209+99.93 to 212+17.66 E-17-JP EASTBOUND
STRUCTURE NO.

	Initial	Date
Det. By	GET	3-63
Chk. By	JLB	3-63
Det. By	JLB	3-63
Chk. By		
Det. By		
Chk. By		

COLORADO
DEPARTMENT OF HIGHWAYS
STRUCTURE LAYOUT

Across HAVANA ST.
Sta. *
Near Denver Sec. 24 T. 3S R67W

Designed by GET
Made by JLB
Checked by

Approved by [signature]
Bridge Engineer
Date: June 17, 1963

REVISIONS

FED. ROAD REG. NO.	DIVISION	PROJECT NO.	SHEET NO.	TOTAL SHEETS
9	COLO.	I 70-4(33)288	21	

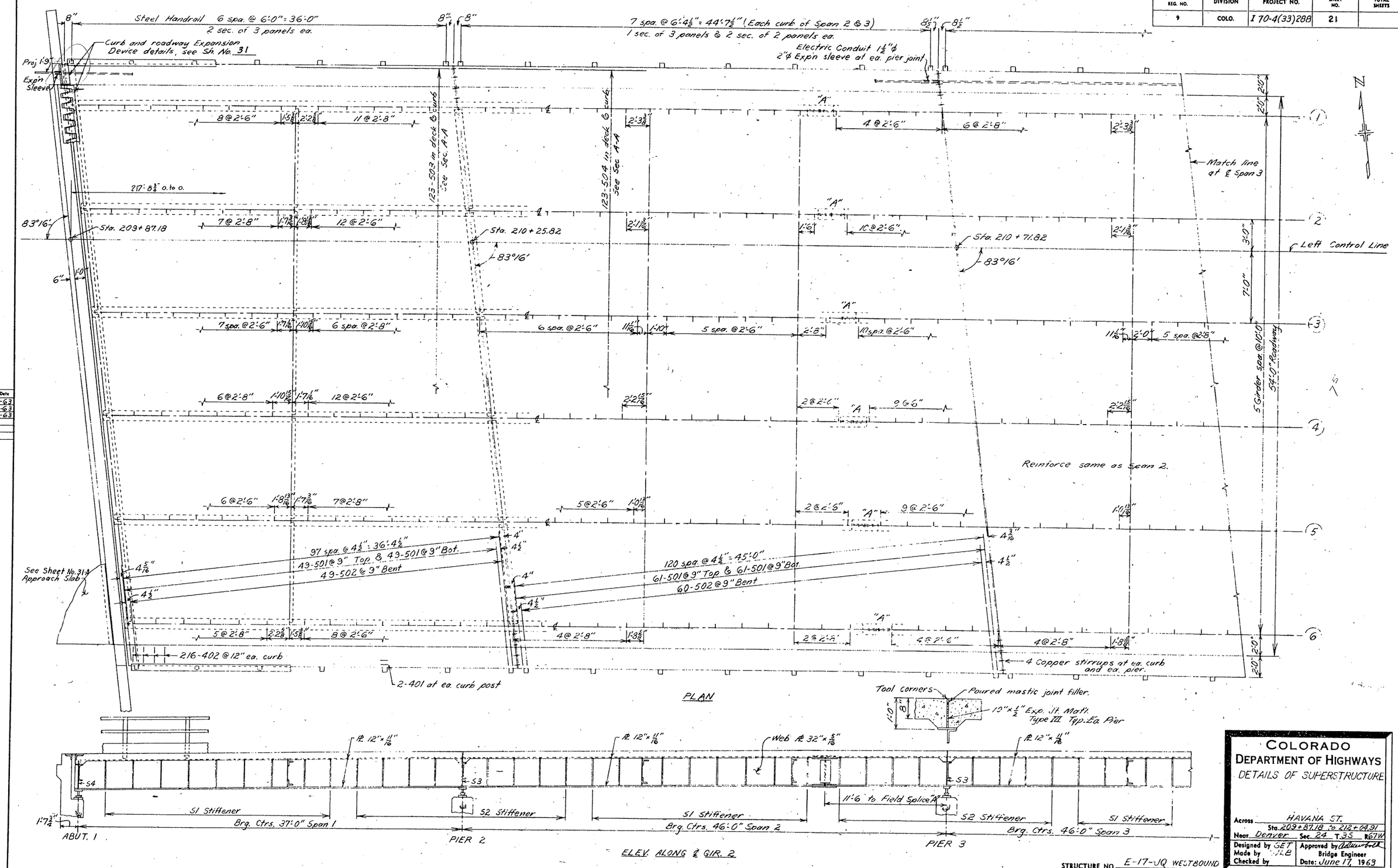

Initial	Date
GET	3-63
JLB	3-63
JLB	3-63

STRUCTURE NO. E-17-UQ WESTBOUND

COLORADO
DEPARTMENT OF HIGHWAYS
DETAILS OF SUPERSTRUCTURE

Across HAVANA ST. Sta. 209+87.18 to 212+04.91
Near Denver Sec. 24 T. 3S R. 67W

Designed by GET
Made by JLB
Checked by

Approved by
Bridge Engineer
Date: June 17, 1963

FED. ROAD REG. NO.	DIVISION	PROJECT NO.	SHEET NO.	TOTAL SHEETS
9	COLO.	I 70-4(33)288	22	

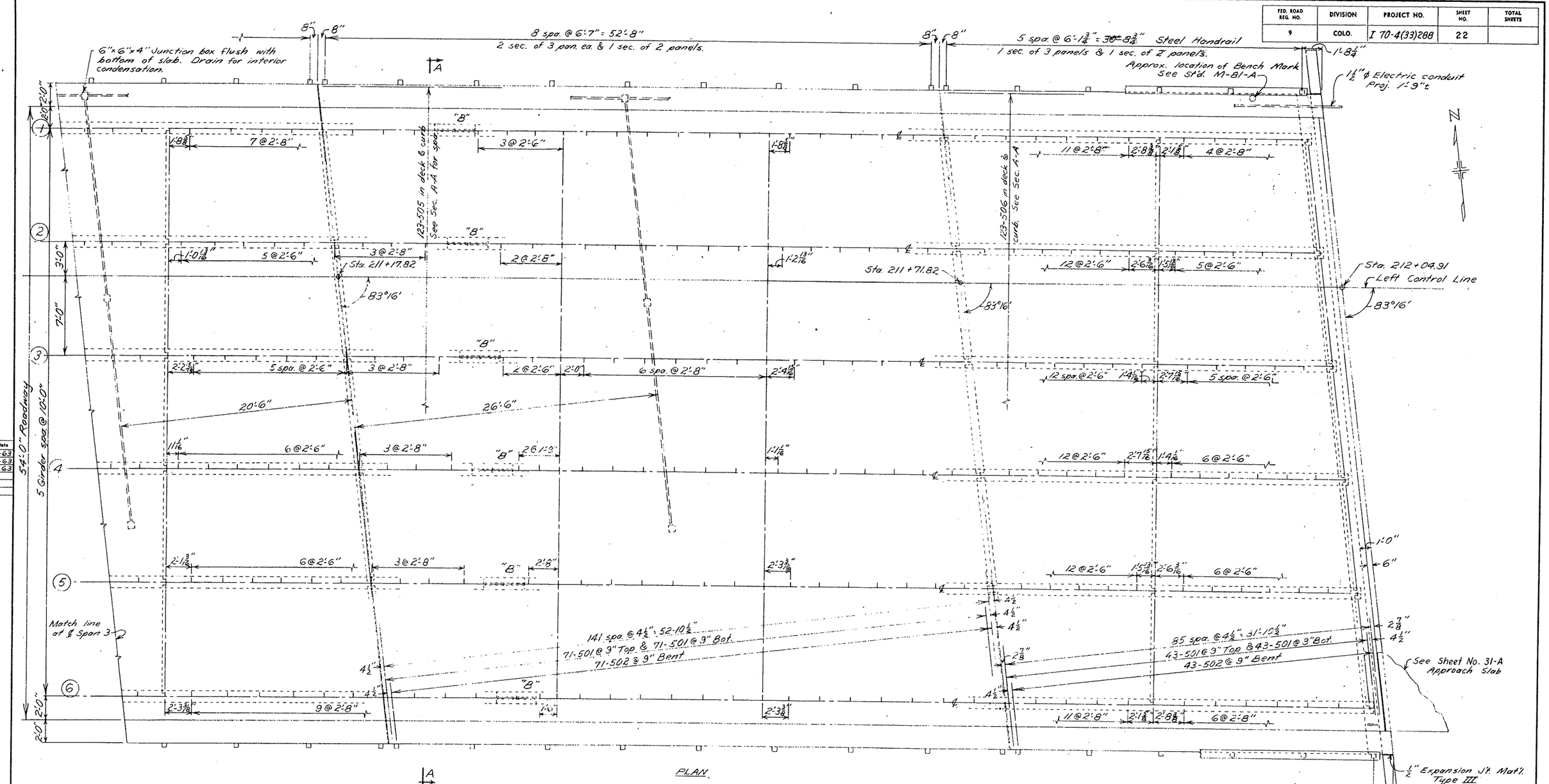

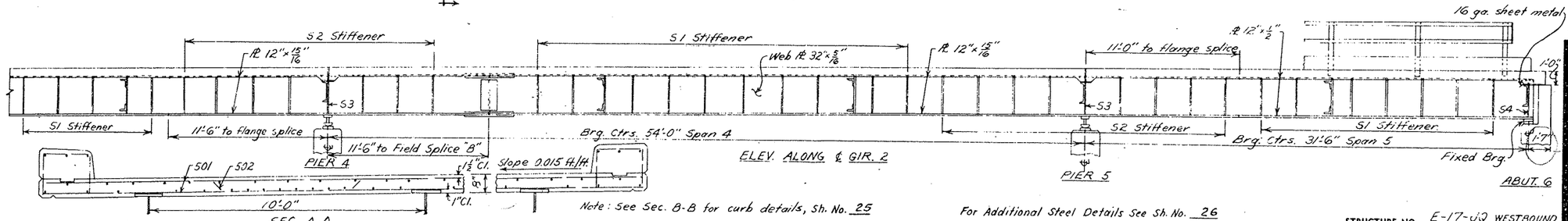

Note: See Sec. B-B for curb details, Sh. No. 25

For Additional Steel Details See Sh. No. 26

STRUCTURE NO. E-17-JQ WESTBOUND

Initial	Date
GET	3-63
JLB	3-63
JLB	3-63

COLORADO DEPARTMENT OF HIGHWAYS

DETAILS OF SUPERSTRUCTURE

Across HAVANA ST.
Sta. 209+87.18 to 212+04.91
Near Denver Sec. 24 T. 3S R. 67W
Designed by GET
Made by JLB
Checked by
Approved by
Bridge Engineer
Date: June 17, 1963

OF HIGHWAYS-
117

REVISIONS

F

FED. ROAD REG. NO.	DIVISION	PROJECT NO.	SHEET NO.	TOTAL SHEETS
9	COLO.	I 70-4(33)288	23	

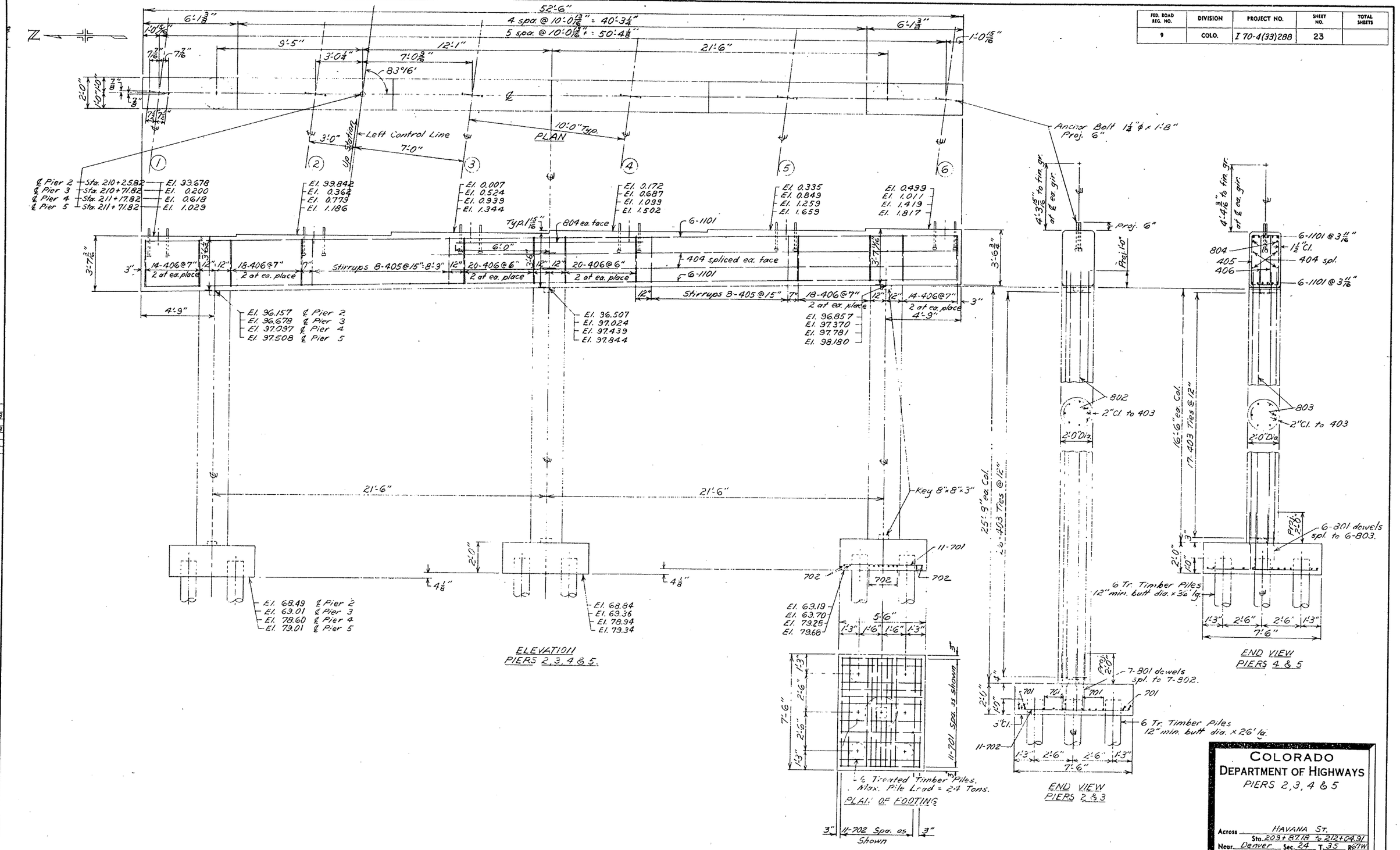

Initial	Date
GET	3-63
JLB	4-63

STRUCTURE NO. E-17-JQ WESTBOUND

COLORADO
DEPARTMENT OF HIGHWAYS
PIERS 2, 3, 4 & 5

Across HAVANA ST.
Sta. 209+87.19 to 212+04.91
Near Denver Sec. 24 T. 3S R. 67W

Designed by GET
Made by JLB
Checked by

Approved by
Bridge Engineer
Date: June 17, 1963

F. OF HIGHWAYS
4. 117

REVISIONS

G

FED. ROAD REG. NO.	DIVISION	PROJECT NO.	SHEET NO.	TOTAL SHEETS
9	COLO.	I 70-4(33)289	24	

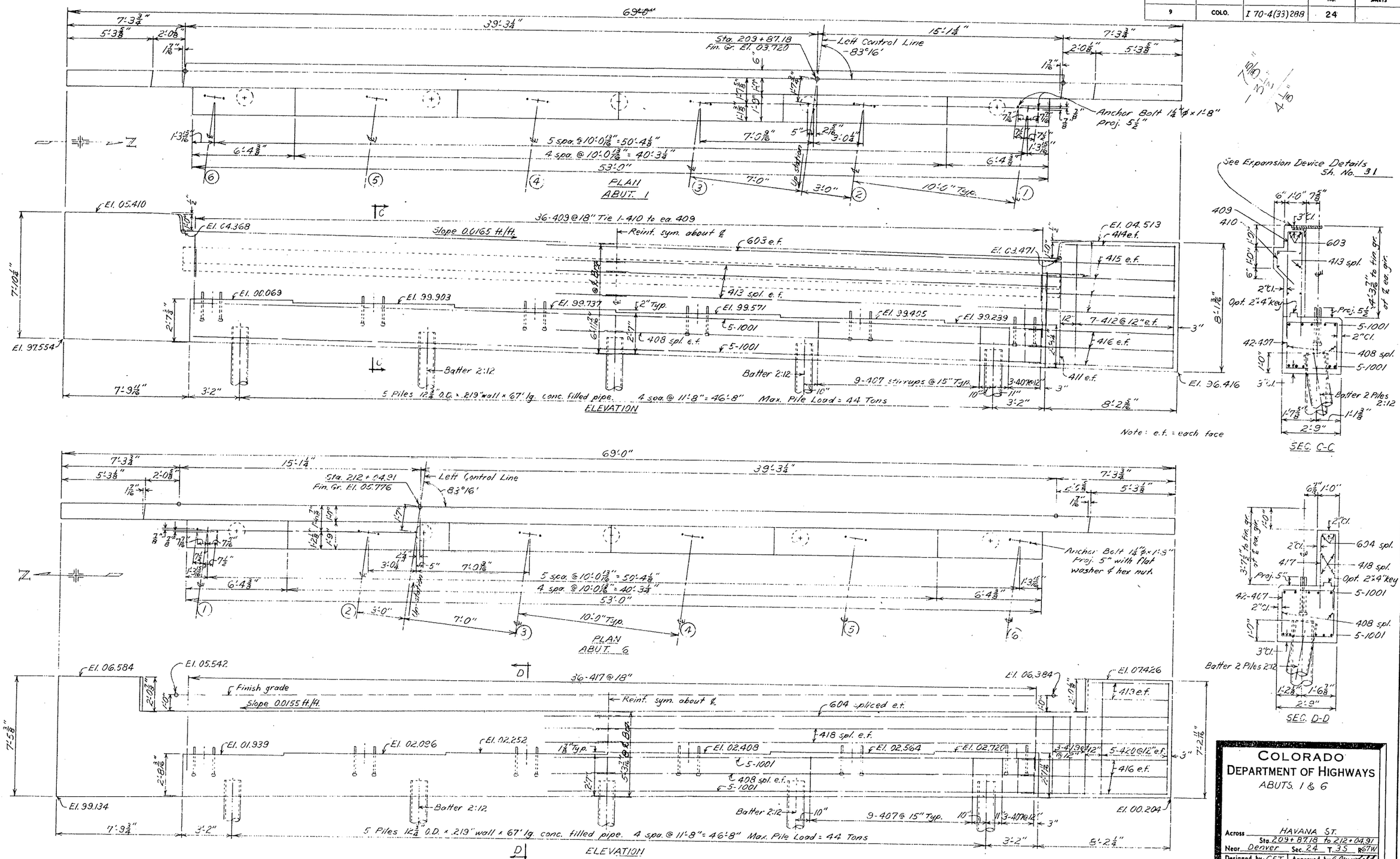

Initial	Date
GET	3-63
JLB	4-63

STRUCTURE NO. E-17-JQ WESTBOUND

COLORADO
DEPARTMENT OF HIGHWAYS
ABUTS. 1 & 6

Across HAVANA ST.
Sta. 209+87.18 to 212+04.91
Near Denver Sec. 24 T. 3S R67W

Designed by GET
Made by JLB
Checked by

Approved by [signature]
Bridge Engineer
Date: June 17, 1963

REVISIONS

FED. ROAD REG. NO.	DIVISION	PROJECT NO.	SHEET NO.	TOTAL SHEETS
9	COLO.	I 70-4(33)28:3	26	

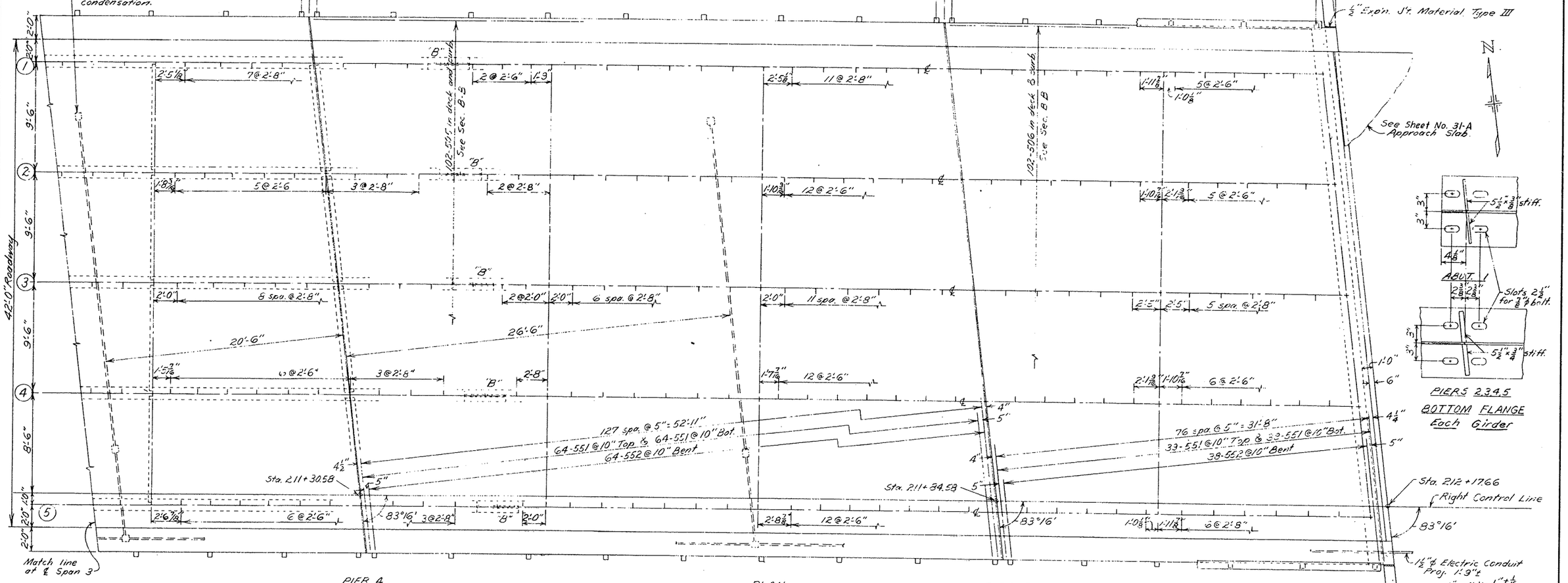

Date
3-63
3-63
3-63

COLORADO DEPARTMENT OF HIGHWAYS

DETAILS OF SUPERSTRUCTURE AND STEEL DETAILS

Across HAVANA ST.
Sta. 209+99.03 to 212+17.66
Near Denver Sec. 24 T. 3 S. R. 67 W

Designed by GET
Made by JLB
Checked by

Approved by [signature]
Bridge Engineer
Date: June 17, 1963

STRUCTURE NO. E-17-JP EASTBOUND

HIGHWAYS

REVISIONS

11

FED. ROAD REG. NO.	DIVISION	PROJECT NO.	SHEET NO.	TOTAL SHEETS
9	COLO.	I 70-4(33)289	25	

Revisions	Date
1	3-63
2	3-63
3	3-63

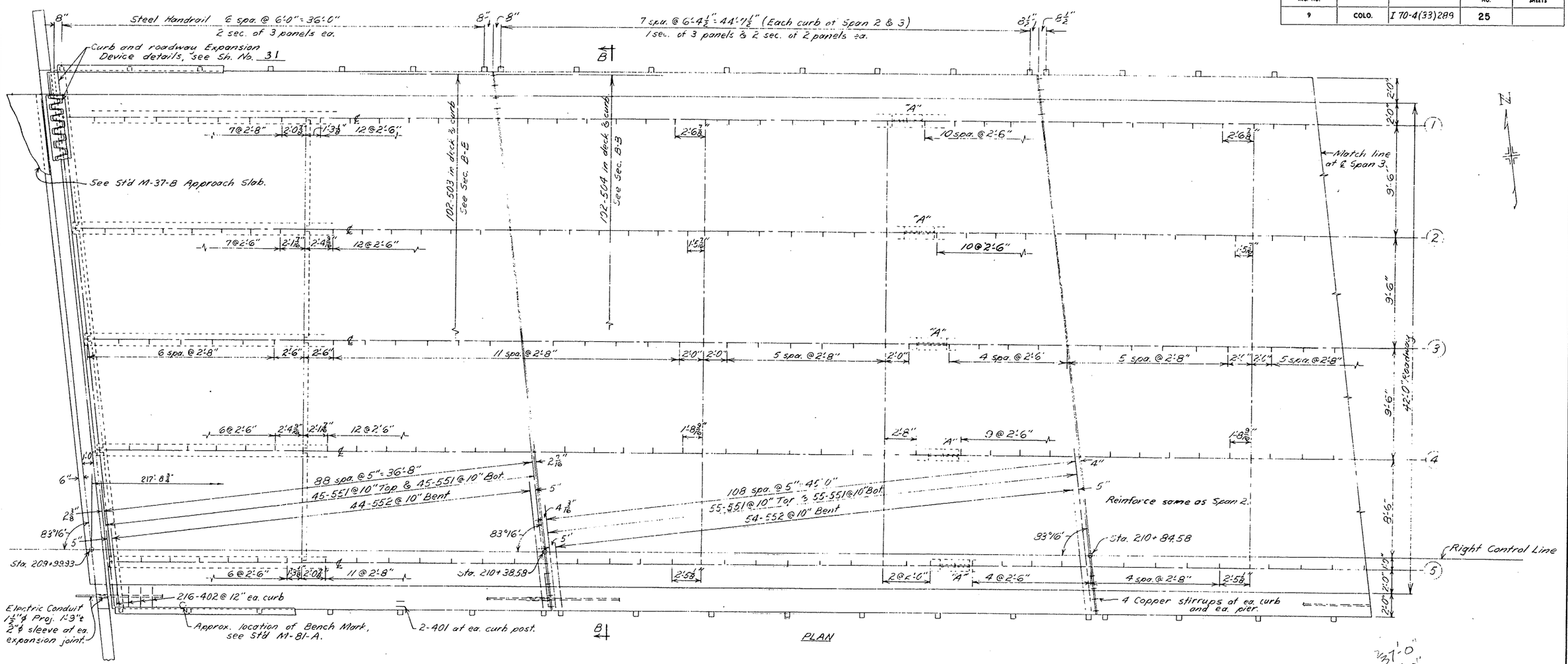

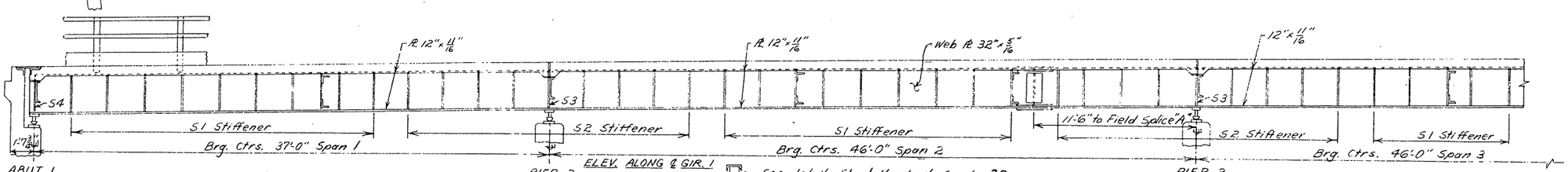

37'-0"
46'-0"
46'-0"
54'-0"
31'-6"
214'-6"
1½" Parapet
90°

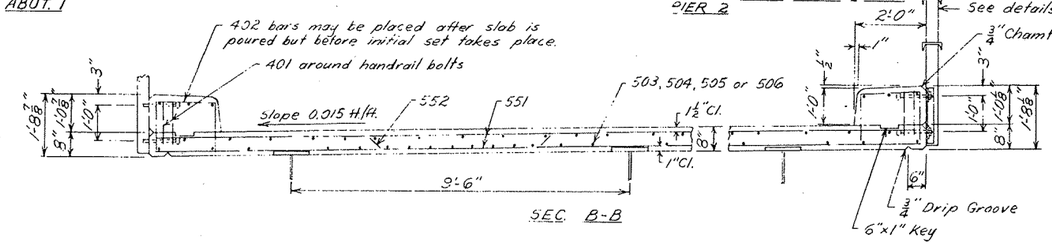

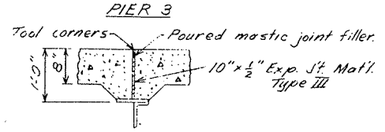

STRUCTURE NO. E-17-JP EASTBOUND

COLORADO
DEPARTMENT OF HIGHWAYS
DETAILS OF SUPERSTRUCTURE

Across HAVANA ST.
Sta. 209+99.93 to 212+17.66
Near Denver Sec. 24 T. 3S R. 67W

Designed by GET
Made by JLB
Checked by

Approved by
Bridge Engineer
Date: June 17, 1963

HIGHWAYS

REVISIONS

FED. ROAD REG. NO.	DIVISION	PROJECT NO.	SHEET NO.	TOTAL SHEETS
9	COLO.	I 70-4(33)288	27	

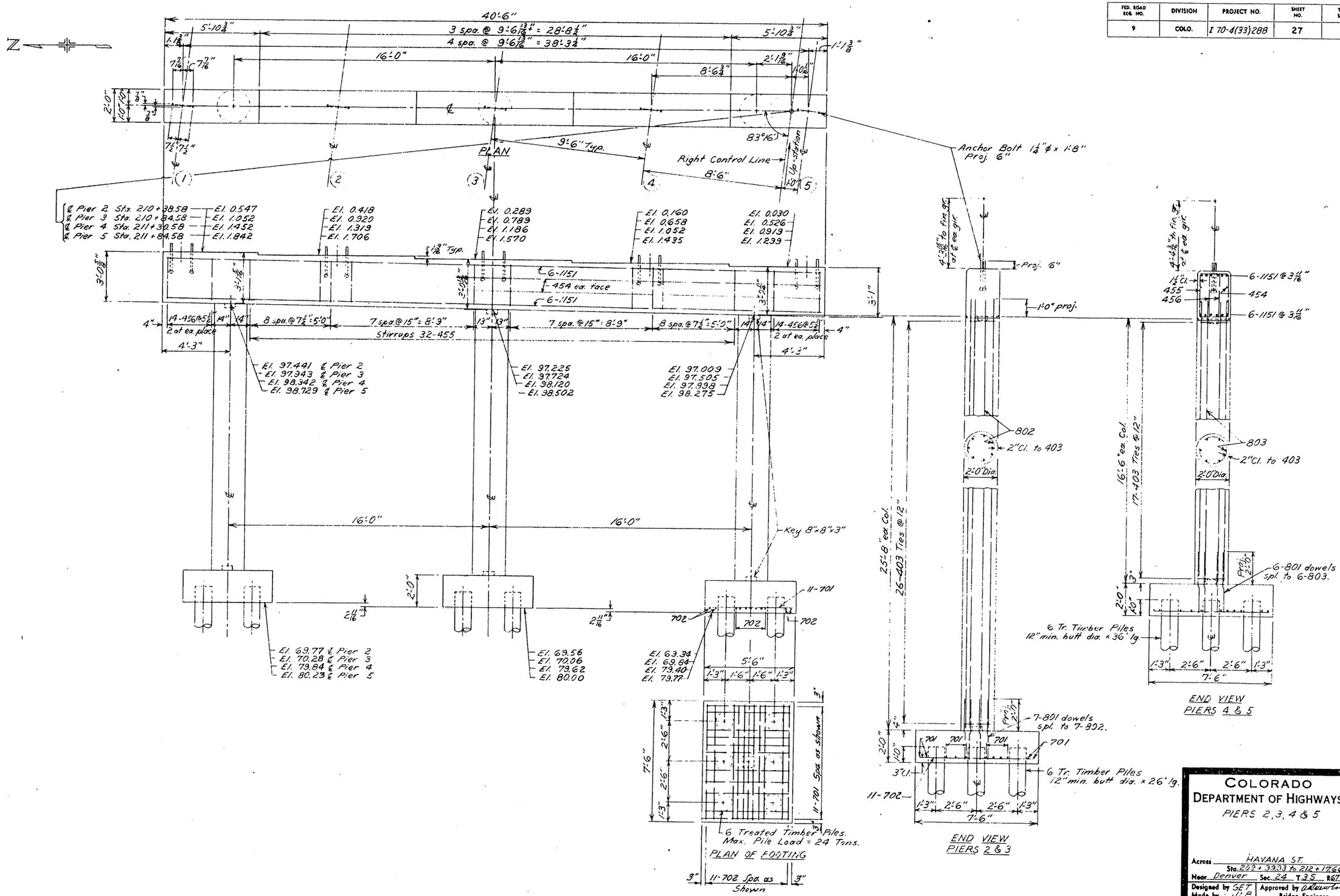

Initial	Date
	3-63
	4-63

COLORADO
DEPARTMENT OF HIGHWAYS
PIERS 2, 3, 4 & 5

Across HAVANA ST.
Sta. 209+33.33 to 212+17.66
Near Denver Sec. 24 T. 3 S R. 67 W.

Designed by GET
Made by JLB
Checked by

Approved by
Bridge Engineer
Date: June 17, 1963

STRUCTURE NO. E-17-JP EASTBOUND

OF HIGHWAYS
117

REVISIONS

K

FED. ROAD ADM. NO.	DIVISION	PROJECT NO.	SHEET NO.	TOTAL SHEETS
9	COLO.	I 70-4(33)298	28	

	Initial	Date
	GET	3-63
	JLB	4-63

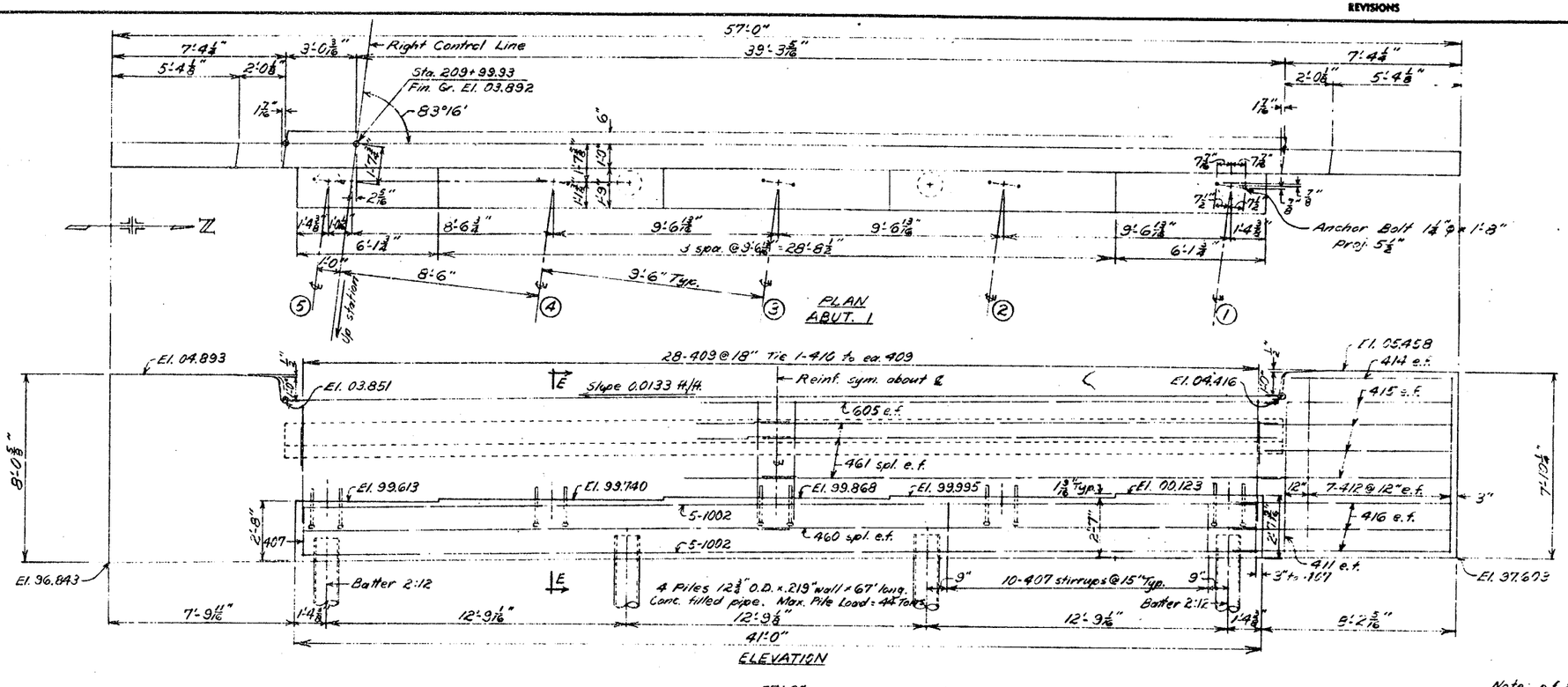

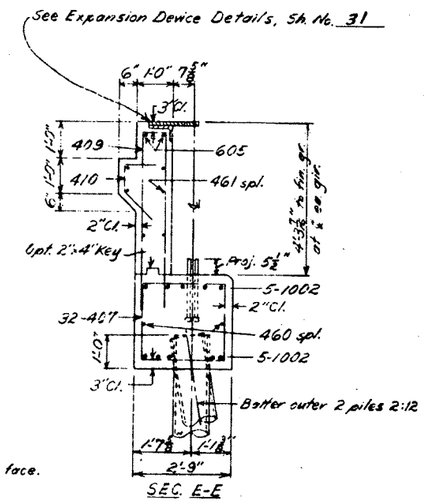

Note: e.f. = each face.

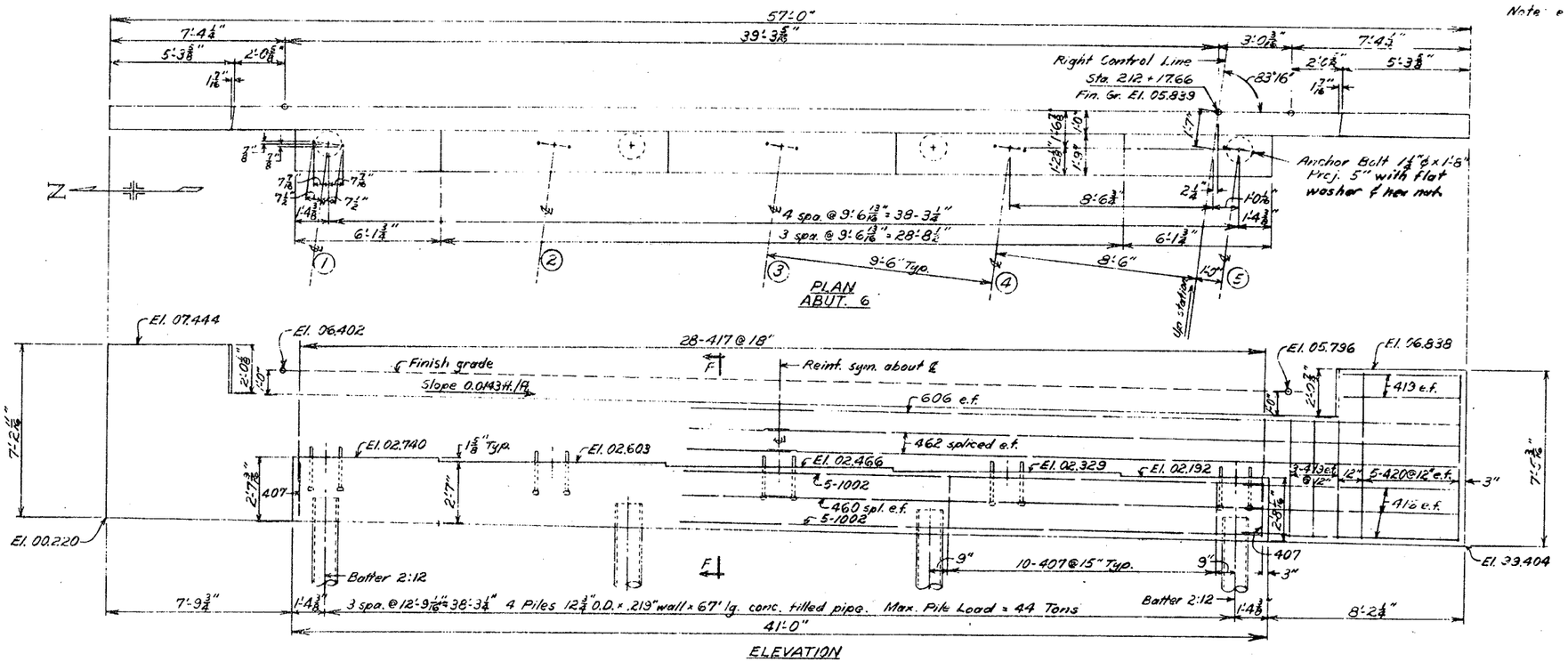

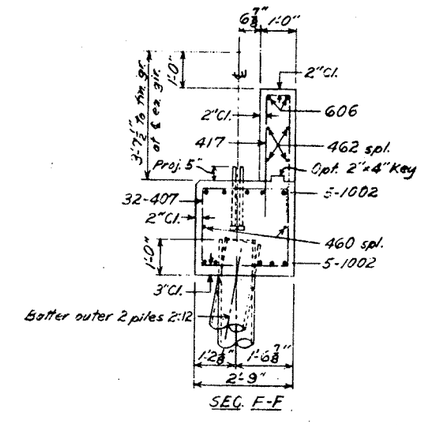

STRUCTURE NO. E-17-JP EASTBOUND

COLORADO
DEPARTMENT OF HIGHWAYS
ABUTS. 1 & 6

Across HAVANA ST.
Sta. 209+99.93 to 212+17.66
Near Denver Sec. 24 T. 3 S R. 67 W

Designed by GET
Made by JLB
Checked by

Approved by
Bridge Engineer
Date: June 17, 1963

FED. ROAD DIV. NO.	DIVISION	PROJECT NO.	SHEET NO.	TOTAL SHEETS
9	COLO.	I 70-4(33)228	29	

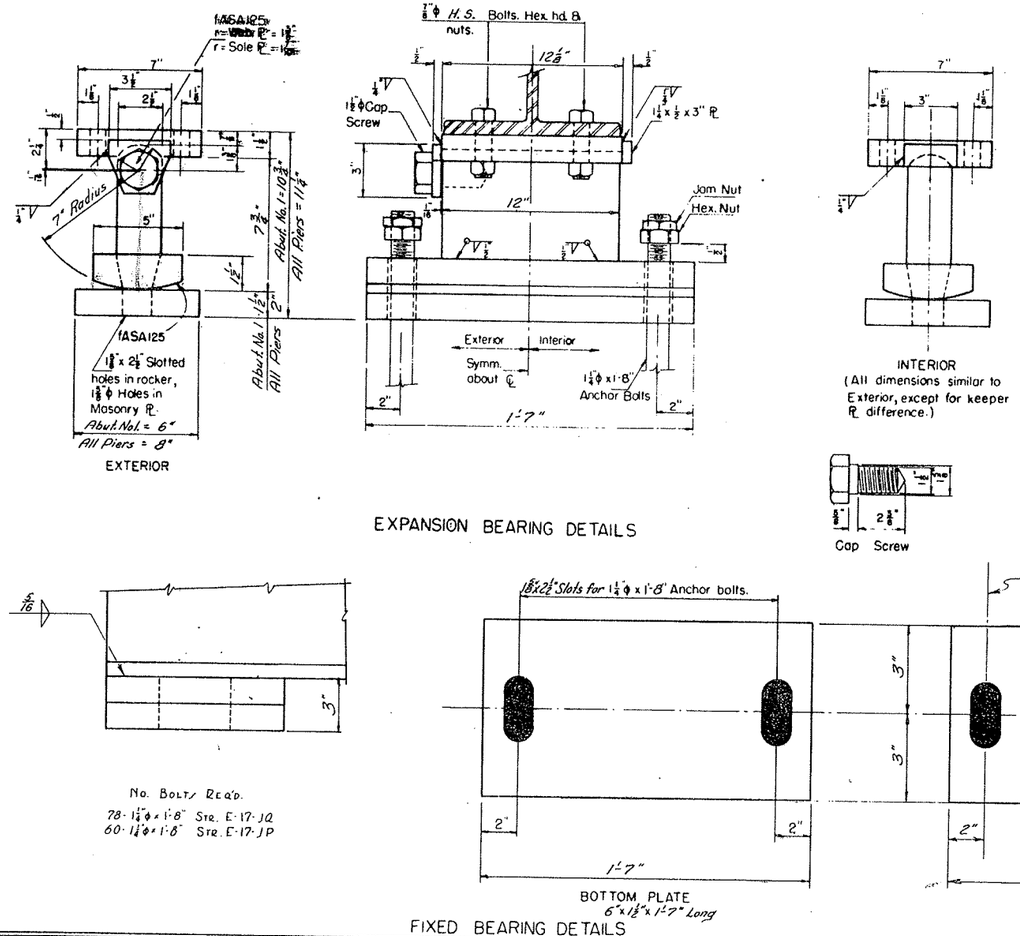

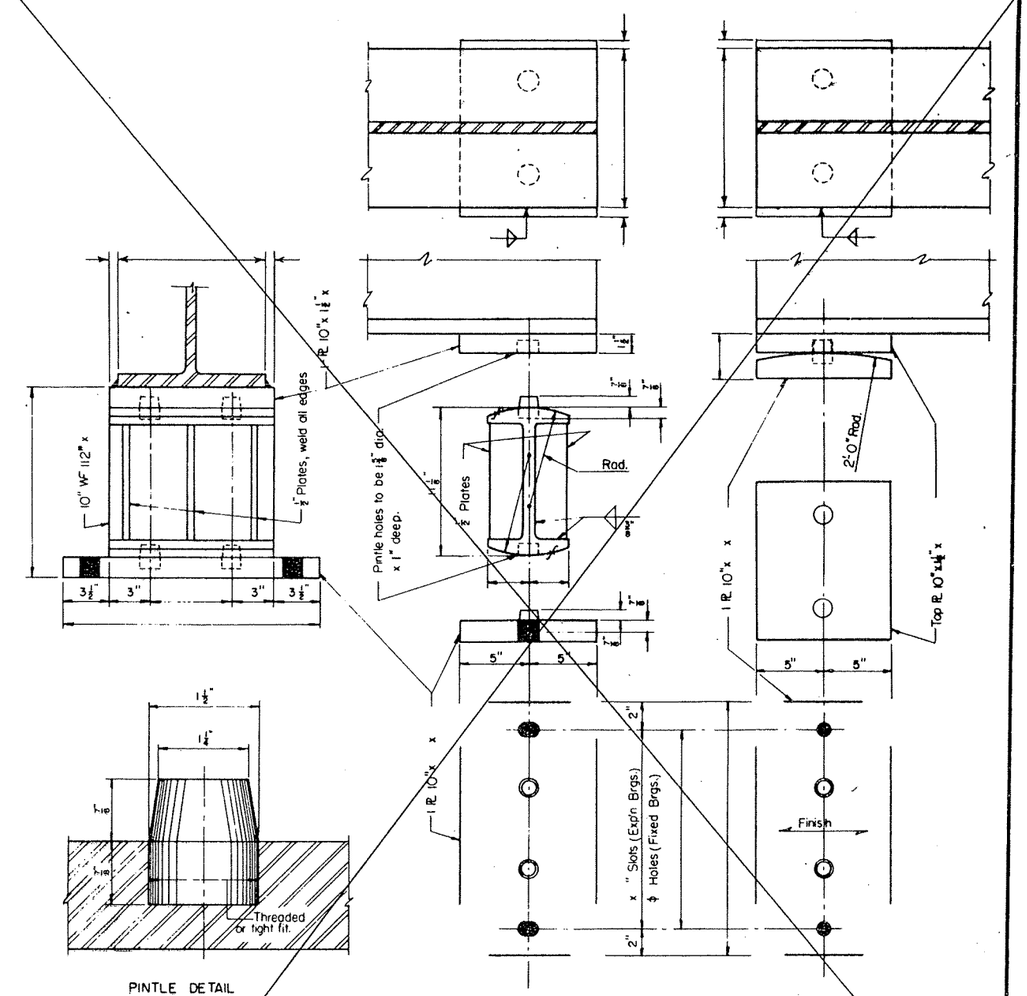

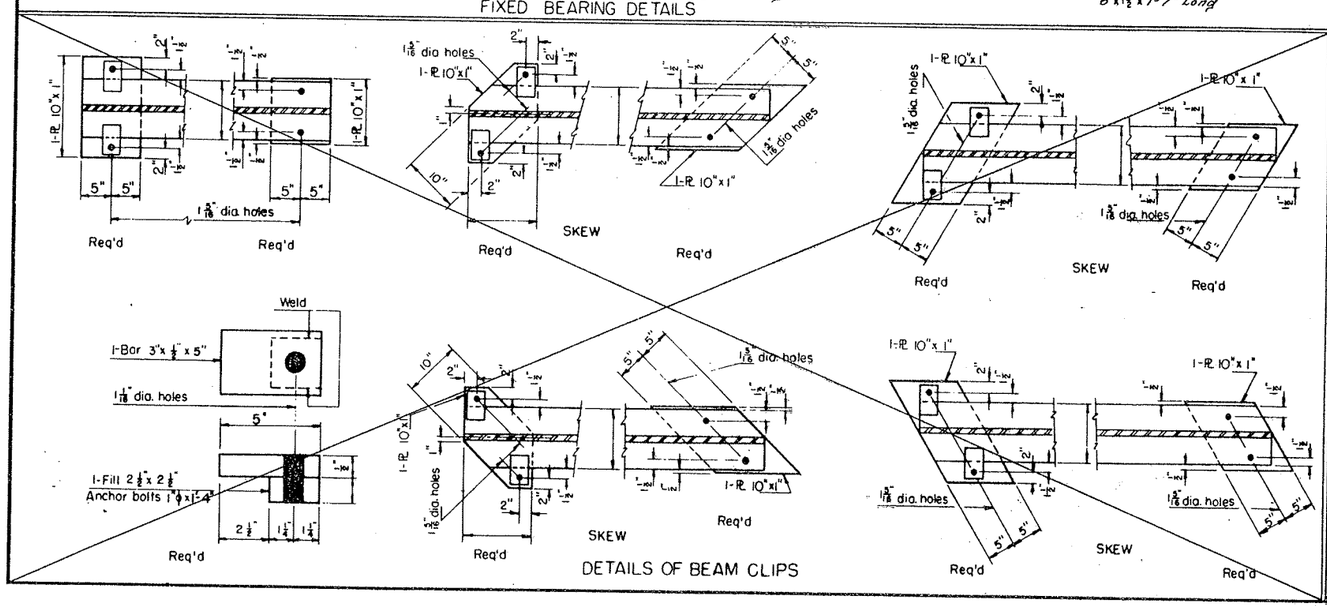

* Sta. 209+82.18 to 212+04.91
* Sta. 209+99.93 to 212+17.66

STRUCTURE NO. E-17-JQ Westbound
STRUCTURE NO. E-17-JP Eastbound

COLORADO
DEPARTMENT OF HIGHWAYS
MISCELLANEOUS
BEARING DETAILS

Across Havana Street
Sta. *
Near Denver Sec. 24 T. 3S R. 67W

Designed by GET
Made by J.L.B. & M.E.P.
Checked by
Approved by [signature]
Bridge Engineer
Date June 17, 1963

REVISIONS

FED. ROAD REG. NO.	DIVISION	PROJECT NO.	SHEET NO.	TOTAL SHEETS
9	COLO.	I 70-4(33)288	30	

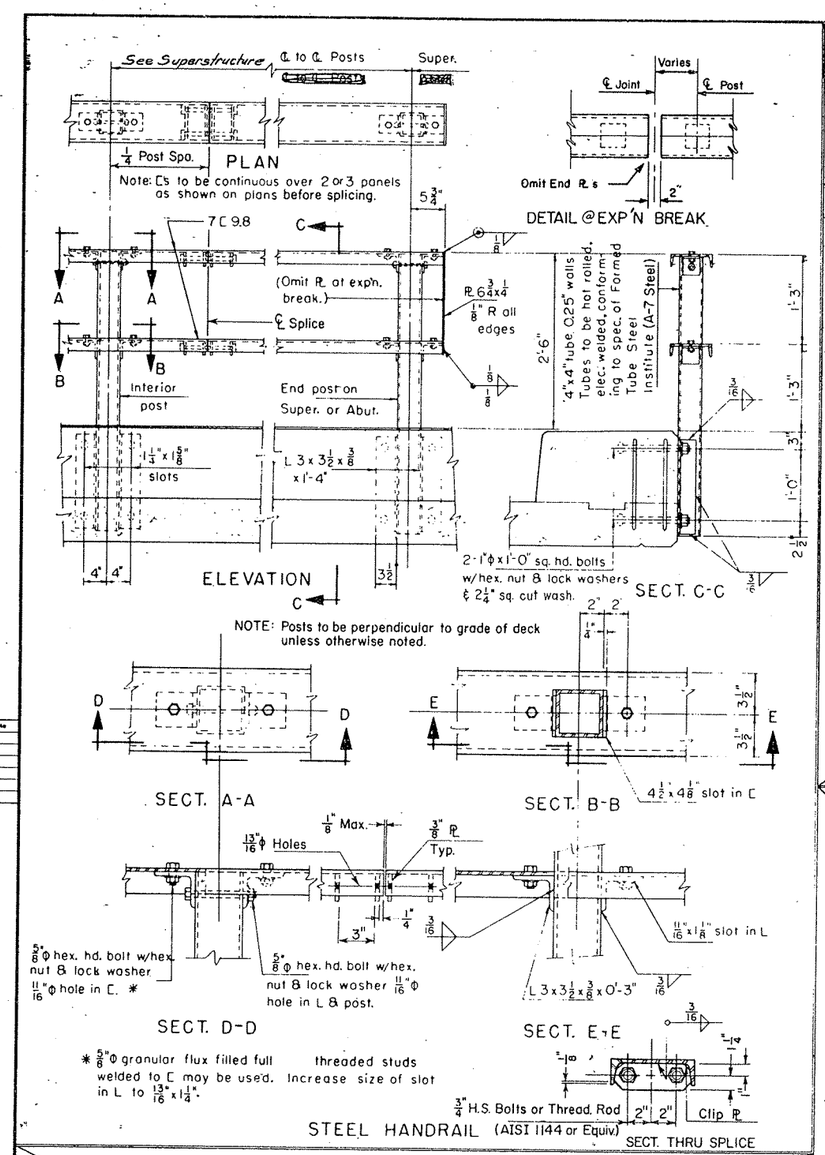

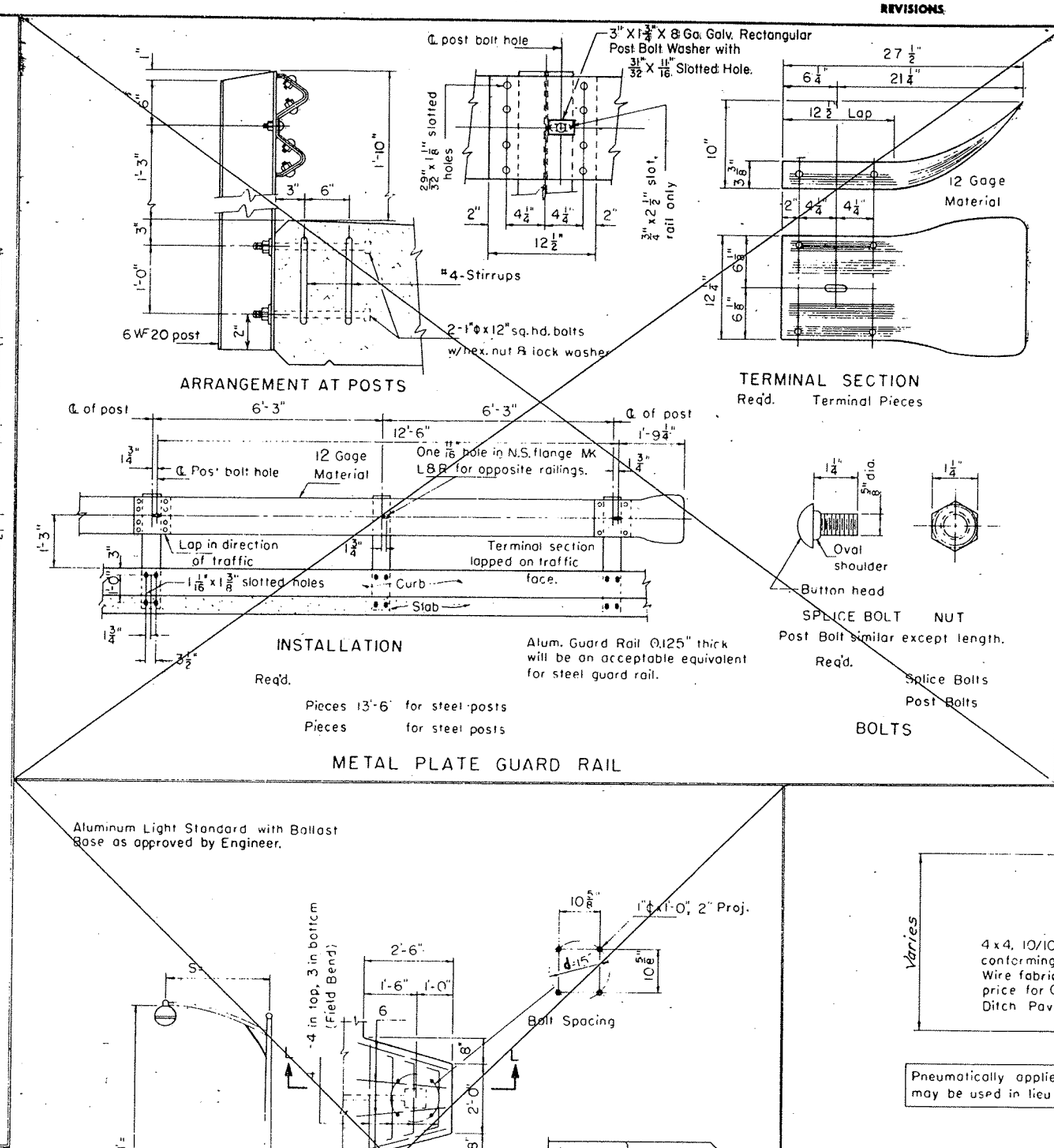

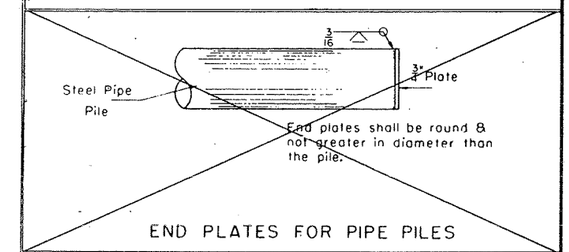

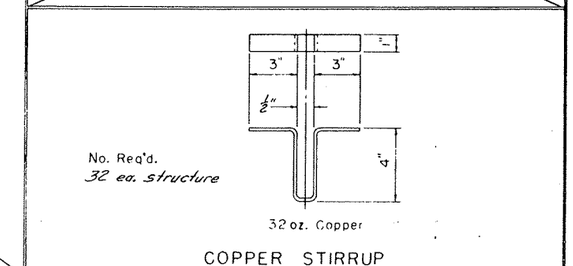

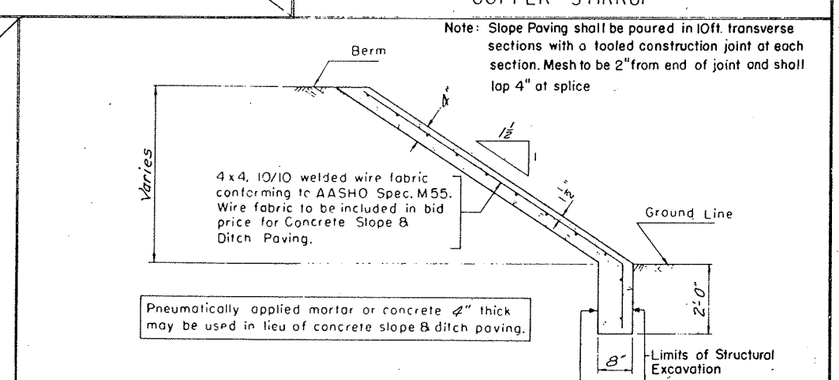

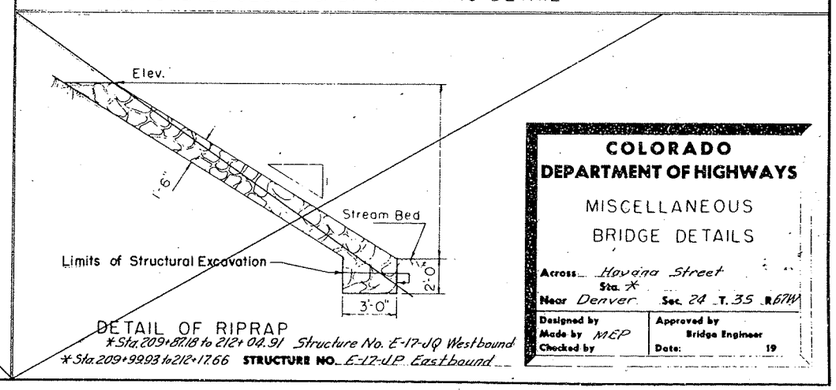

COLORADO DEPARTMENT OF HIGHWAYS

MISCELLANEOUS BRIDGE DETAILS

Across Havana Street Sta. *
Near Denver Sec. 24 T. 3S R. 67W

Designed by	Approved by Bridge Engineer
Made by MEP	
Checked by	Date: 19

REVISIONS

FED. ROAD REG. NO.	DIVISION	PROJECT NO.	SHEET NO.	TOTAL SHEETS
9	COLO.	I 70-4(33)288	31	

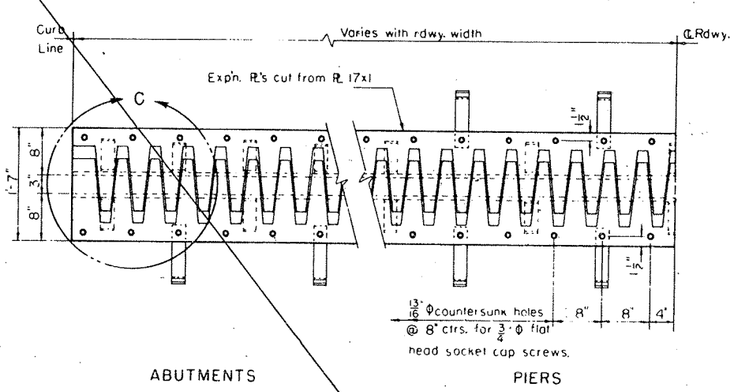

ABUTMENTS PIERS

PLAN

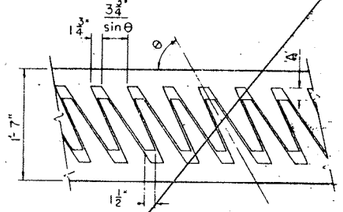

PLAN
Skewed

* Note: Granular flux filled concrete anchors 3/4" Φ automatically end welded, spaced similar to 2 1/4" x 5/16" anchors, may be used as an alternate.

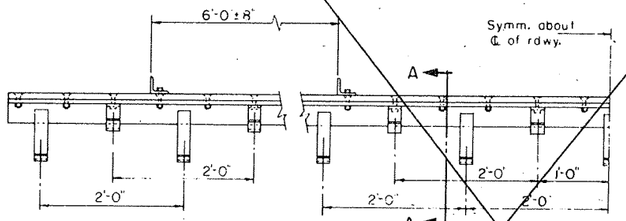

ABUTMENTS PIERS

ELEVATION

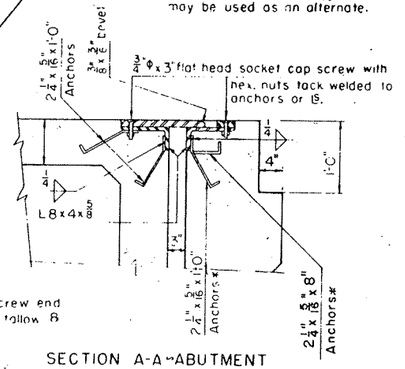

SECTION A-A-ABUTMENT

3/4" Φ flat head socket cap screw end threads to be coated with tallow & white lead.

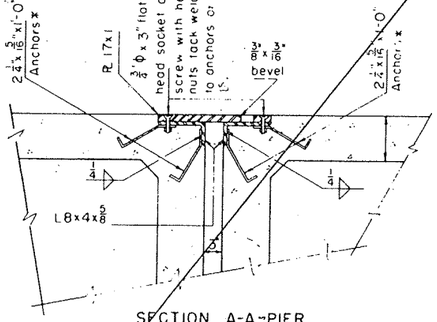

SECTION A-A-PIER

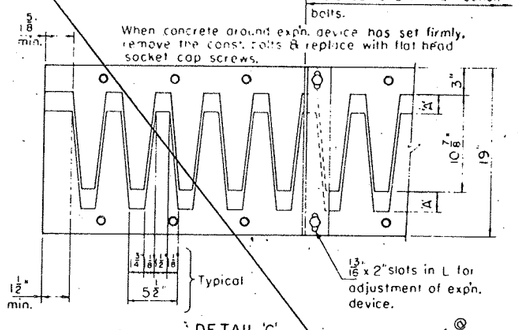

⊥ 3 x 3 x 5/16 x 19" @ 6'-0" ± ctrs fastened to Pl with 3/4" Φ const. bolts.

When concrete around exp'n. device has set firmly, remove the const. bolts & replace with flat head socket cap screws.

DETAIL 'C'

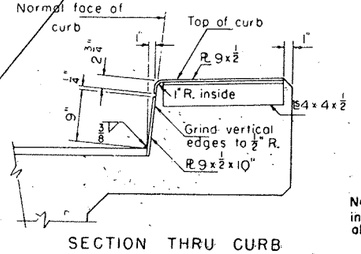

SECTION THRU CURB

Outside Temp.	Dimension 'A'
40°	
60°	2 1/8"
80°	
100°	

Note: After concrete has attained initial set, loosen const. bolts to allow movement due to temp. change.

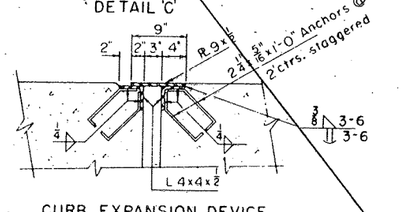

CURB EXPANSION DEVICE

DETAILS of EXPANSION DEVICE – Concrete Slab & Steel Girders

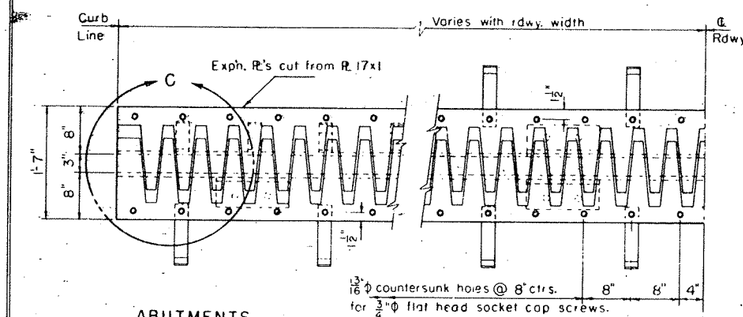

ABUTMENTS PIERS

PLAN

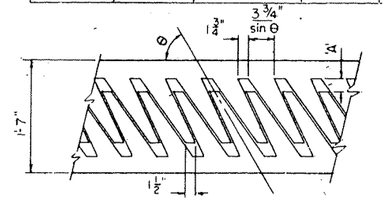

PLAN
Skewed

* Note: Granular flux filled concrete anchors 3/4" Φ automatically end welded, spaced similar to 2 1/4" x 5/16" anchors, may be used as alternate.

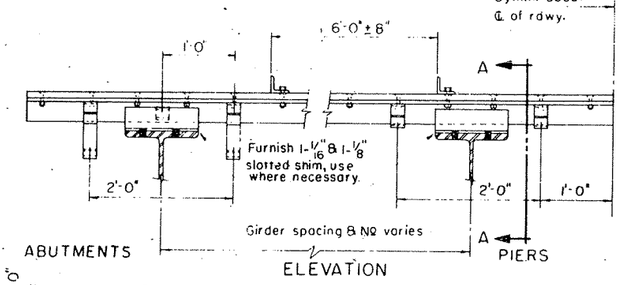

ABUTMENTS PIERS

ELEVATION

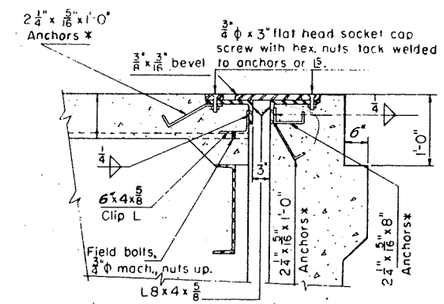

SECTION A-A-ABUTMENT

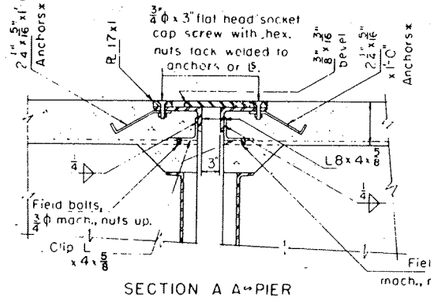

SECTION A-A-PIER

3/4" Φ flat head socket cap screw end threads to be coated with tallow & white lead.

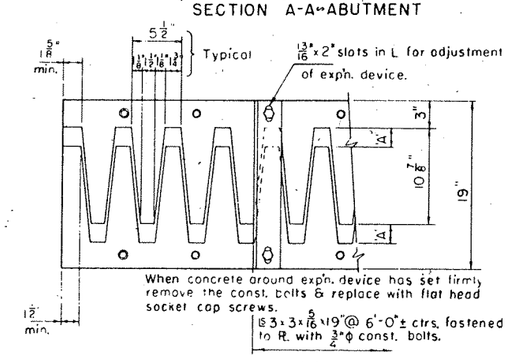

When concrete around exp'n. device has set firmly remove the const. bolts & replace with flat head socket cap screws.

⊥ 3 x 3 x 5/16 x 19" @ 6'-0" ± ctrs, fastened to Pl with 3/4" Φ const. bolts.

DETAIL 'C'

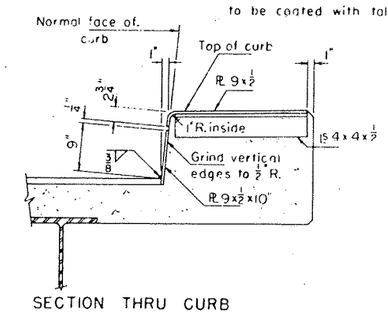

SECTION THRU CURB

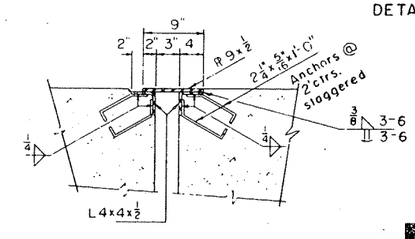

CURB EXPANSION DEVICE

Outside Temp.	Dimension 'A'
40°	2 5/16"
60°	2 1/8"
80°	1 13/16"
100°	1 1/2"

Note: After concrete has attained initial set, loosen const. bolts to allow movement due to temp. change.

DETAILS of EXPANSION DEVICE – Concrete Slab & Steel Girders

* Sta 209+87.18 to 212+09.91 STRUCTURE NO. E-17-UQ Westbound
* Sta 209+99.93 to 212+17.66 STRUCTURE NO. E-17-UP East bound

COLORADO
DEPARTMENT OF HIGHWAYS
EXPANSION
DEVICE DETAILS

Across Havana Street
Sta. *
Near Denver Sec. 24 T. 3 S R. 67 W

Designed by GET
Made by M.E.P.
Checked by

Approved by [signature]
Bridge Engineer
Date: June 17, 1963

STANDARD M-37-B

(MAY 1, 1962)

FED. ROAD REGION NO.	DIVISION	PROJECT NO.	SHEET NO.
9	COLORADO	I 70-4(33) 288	31-A

REVISIONS		
1-28-63	Delete Dowels, Add 24' & 28' Slabs	L.E.O.
3-25-63	Added Curbs & D Bar Note	C.R.S.
6-13-63	Special this Project Only	M.E.P.

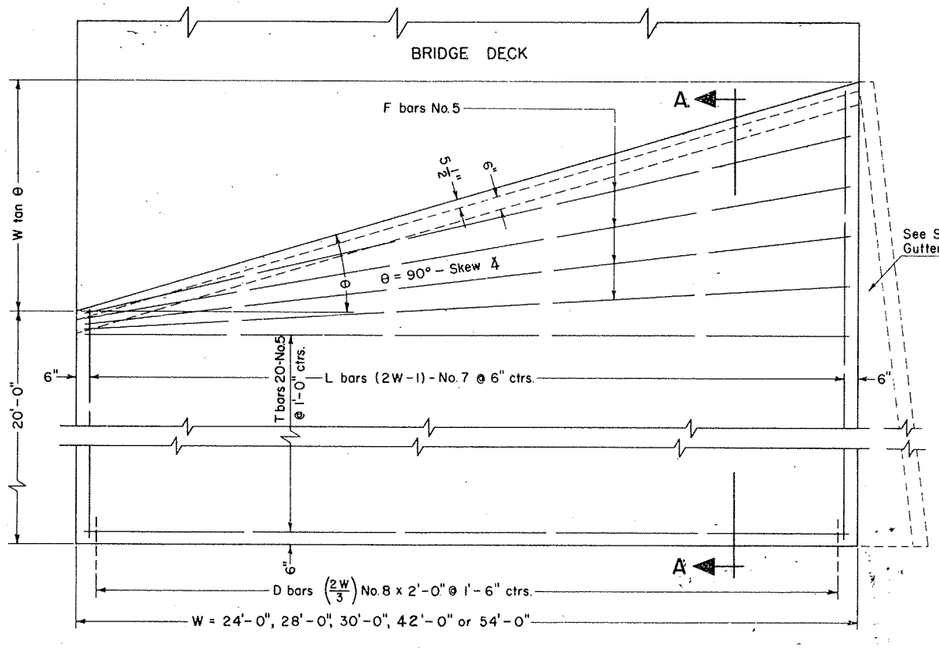

APPROACH SLAB - PLAN

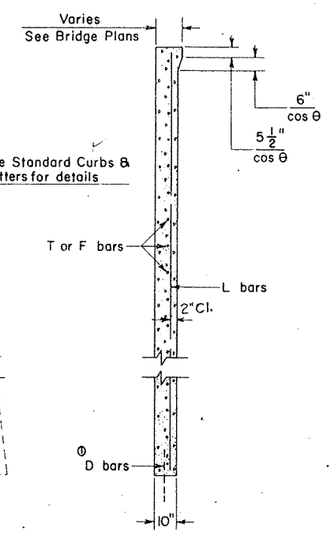

① Omit D bars when roadway is asphaltic paved.

SECTION A-A

Bars Required For 1 Approach Slab / 24'-0" Roadway

T = No.5; Str.		F = No.5; Str.		L = No.7; Str.		D = No.8; Str.	
No.	Length	No.	Length	No.	Length	No.	Length
20	23'-6"	12 tan θ	23'-6"	47	19'-6" by (6 tan θ) inches to 19'-6" + (23 tan θ) ft.	16	2'-0"

Quantities For 1 Approach Slab

Reinforcing Steel
F bars 296 tan θ = Lb.
L bars 1892 + 1116 tan θ = Lb.
T + D bars = 580 Lb.
TOTAL (Includes 1% ± Overrun) Lb.

Bars Required For 1 Approach Slab / 28'-0" Roadway

T = No.5; Str.		F = No.5; Str.		L = No.7; Str.		D = No.8; Str.	
No.	Length	No.	Length	No.	Length	No.	Length
20	27'-6"	14 tan θ	27'-6"	55	19'-6" by (6 tan θ) inches to 19'-6" + (27 tan θ) ft.	19	2'-0"

Quantities For 1 Approach Slab

Reinforcing Steel
F bars 406 tan θ = Lb.
L bars 2214 + 1533 tan θ = Lb.
T + D bars = 682 Lb.
TOTAL (Includes 1% ± Overrun) Lb.

Bars Required For 1 Approach Slab / 30'-0" Roadway

T = No.5; Str.		F = No.5; Str.		L = No.7; Str.		D = No.8; Str.	
No.	Length	No.	Length	No.	Length	No.	Length
20	29'-6"	15 tan θ	29'-6"	59	19'-6" by (6 tan θ) inches to 19'-6" + (29 tan θ) ft.	20	2'-0"

Quantities For 1 Approach Slab

Reinforcing Steel
F bars 466 tan θ = Lb.
L bars 2375 + 1766 tan θ = Lb.
T + D bars = 729 Lb.
TOTAL (Includes 1% ± Overrun) Lb.

Bars Required For 1 Approach Slab / 42'-0" Roadway

T = No.5; Str.		F = No.5; Str.		L = No.7; Str.		D = No.8; Str.	
No.	Length	No.	Length	No.	Length	No.	Length
20	41'-6"	21 tan θ	41'-6"	83	19'-6" by (6 tan θ) inches to 19'-6" + (tan θ) ft.	28	2'-0"

Quantities For 1 Approach Slab

Reinforcing Steel
F bars 918 tan θ = Lb.
L bars 3341 + 3513 tan θ = Lb.
T + D bars = 1025 Lb.
TOTAL (Includes 1% ± Overrun) Lb.

Bars Required For 1 Approach Slab / 54'-0" Roadway

T = No.5; Str.		F = No.5; Str.		L = No.7; Str.		D = No.8; Str.	
No.	Length	No.	Length	No.	Length	No.	Length
20	53'-6"	27 tan θ	53'-6"	107	19'-6" by (6 tan θ) inches to 19'-6" + (53 tan θ) ft.	36	2'-0"

Quantities For 1 Approach Slab

Reinforcing Steel
F bars 1522 tan θ = Lb.
L bars 4307 + 5854 tan θ = Lb.
T + D bars = 1321 Lb.
TOTAL (Includes 1% ± Overrun) Lb.

Quantity of Concrete Pavement for 1 Approach Slab

$\frac{W}{18}(40 + W \tan \theta) =$ Sq. Yds.

Quantity of Expansion Joint Material for 1 Approach Slab
(To be included in the Bid Price for Concrete Pavement)

$0.833 \times \frac{W}{\cos \theta} =$ Sq. Ft.

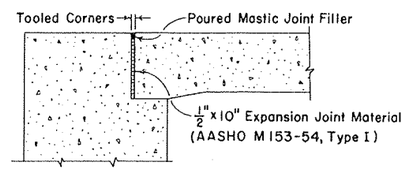

DETAIL AT BRIDGE ABUTMENT

NOTES

Class of Concrete shall be "Pavement."

Concrete shall be paid for under Item 37 by the Sq. Yd. as "Concrete Pavement" of the specified thickness.

Reinforcing Steel required in Approach Slab will be paid for under Item 47.

Class "A" concrete aggregate may be used in the pavement.

COLORADO
DEPARTMENT OF HIGHWAYS

CONCRETE PAVEMENT BRIDGE APPROACH SLAB

Designed by J.G.G.
Made by T.F.
Checked by P.C.

Approved by [signature]
Bridge Engineer
Date: March 7, 1962