GENERAL NOTES

EXPANSION JOINT MATERIAL SHALL MEET AASHTO SPECIFICATION M-213

THE FINAL FINISH FOR THE SURFACES OF THE MONUMENTS AND CURBS SHALL BE CLASS 2. ALL OTHER EXPOSED CONCRETE SURFACES SHALL RECEIVE A CLASS 1 FINAL FINISH TO ONE FOOT BELOW THE GROUND LINE.

ALL BOLTS SHALL BE 7/8" DIAMETER, HIGH STRENGTH, ASTM A325 UNLESS OTHERWISE NOTED.

GRADE 60 REINFORCING STEEL IS REQUIRED.

ALL REINFORCING STEEL SHALL BE EPOXY COATED UNLESS OTHERWISE NOTED.

Ⓑ DENOTES NON-COATED REINFORCING STEEL.

CHAMFER ALL EXPOSED EDGES OF CONCRETE 3/4" UNLESS OTHERWISE NOTED.

LEVELING PADS ARE UNLAMINATED BEARINGS. THEY SHALL BE CUT OR MOLDED FROM AASHTO ELASTOMER GRADE 3, 4 OR 5 AS DESCRIBED IN TABLES 705-1 AND 705-2 OF THE PROJECT SPECIFICATIONS WITH A DUROMETER (SHORE "A") HARDNESS OF 60.

THE CONTRACTOR SHALL BE RESPONSIBLE FOR THE STABILITY OF THE STRUCTURE DURING CONSTRUCTION.

STATIONS, ELEVATIONS, AND DIMENSIONS CONTAINED IN THESE PLANS ARE CALCULATED FROM A RECENT FIELD SURVEY. THE CONTRACTOR SHALL VERIFY ALL DEPENDENT DIMENSIONS IN THE FIELD BEFORE ORDERING OR FABRICATING ANY MATERIAL.

THE FOLLOWING TABLE GIVES THE MINIMUM LAP SPLICE LENGTH FOR REINFORCING BARS PLACED IN ACCORDANCE WITH SUBSECTION 602.06

		BAR SIZE							
	CONCRETE	#4	#5	#6	#7	#8	#9	#10	#11
EPOXY	CLASS B	1'-7"	2'-0"	2'-7"	3'-6"	4'-7"	5'-9"	7'-3"	8'-11"
COATED	CLASS D	1'-7"	2'-0"	2'-5"	2'-10"	3'-9"	4'-8"	5'-11"	7'-4"
BLACK	CLASS B	1'-1"	1'-4"	1'-9"	2'-4"	3'-1"	3'-10"	4'-10"	6'-0"
REBAR	CLASS D	1'-1"	1'-4"	1'-7"	1'-11"	2'-6"	3'-2"	4'-0"	4'-11"

THESE SPLICES SHALL BE MODIFIED BY THE FOLLOWING FACTORS WHEN:

- REINFORCING IS SPACED BY LESS THAN 6" ON CENTER.....1.25
- TOP REINFORCEMENT - SO PLACED THAT MORE THAN 12" OF CONCRETE IS CAST BELOW THE REINFORCEMENT

  EPOXY COATED.....1.15

  BLACK BARS.....1.40

MECHANICAL COUPLERS ARE NOT PERMITTED WITHOUT ENGINEERS APPROVAL

SPLICES OF BUNDLED BARS ARE NOT ALLOWED UNLESS OTHERWISE NOTED ON THE PLANS, OR APPROVED PRIOR TO CONSTRUCTION.

CONTRACTOR SHALL FOLLOW DIG SAFE PROGRAM ESTABLISHED FOR THIS PROJECT.

REFER TO MHT PLANS PRIOR TO SETTING GIRDERS FOR VERTICAL CLEARANCE SIGNING REQUIREMENTS.

UTILITY LOCATIONS SHOWN ARE APPROXIMATE. THE CONTRACTOR SHALL VERIFY ALL UTILITY LOCATIONS PRIOR TO BEGINNING CONSTRUCTION.

CONCRETE DECK SHALL RECEIVE A TINED FINISH

EXPOSED SURFACES OF BRIDGE DECK SHALL RECEIVE A CONCRETE SEALER IN ACCORDANCE WITH SPECIFICATION SECTION 515

CONTRACTOR SHALL SEAL THE BRIDGE DECK AND APPROACH SLAB SURFACE NO EARLIER THAN ONE YEAR AFTER THE DECK HAS BEEN POURED. SEALANT SHALL BE ONE OF THE FOLLOWING PRODUCTS AT SECC'S DISCRETION:

SIKAPRONTO 19TF, SIKADUR 55SLV, OR DENEEF DENEDECK PER MANUFACTURER'S SPECIFICATIONS.

DESIGN DATA

AASHTO, SPECIFICATION 16TH EDITION WITH 1997, 1998, 1999 AND 2000 INTERIMS.

AASHTO, STANDARD SPECIFICATIONS FOR STRUCTURAL SUPPORTS FOR HIGHWAY SIGNS, LUMINAIRES AND TRAFFIC SIGNALS, 4TH EDITION 2001

DESIGN METHOD: LOAD FACTOR DESIGN.

LIVE LOAD: HS-25-44, COLORADO PERMIT VEHICLE AND INTERSTATE ALTERNATE.
DEAD LOAD: ASSUMES 36 LBS. PER SQ. FT. FOR BRIDGE DECK OVERLAY
WIND LOAD: SPECIAL - BASIC WIND SPEED 90 MPH (MIN)

REINFORCED CONCRETE:

CLASS B CONCRETE: f'c = 3,000 PSI
CLASS D CONCRETE: f'c = 4,500 PSI
REINFORCING STEEL: fy = 60,000 PSI

CAISSON CONCRETE:

CLASS BZ CONCRETE: f'c = 4,000 PSI
REINFORCING STEEL: fy = 60,000 PSI

STRUCTURAL STEEL: AASHTO M-223 (ASTM A-572) Fy = 50,000 PSI

PRESTRESSED CONCRETE: CLASS S CONCRETE f'c = (SEE DETAILS ON BT SHEET)
f's = 270,000 PSI (LOW RELAXATION)

INDEX OF DRAWINGS

B101	GENERAL INFORMATION
B102	GENERAL LAYOUT
B103	TYPICAL SECTION
B104A	ENGINEERING GEOLOGY BRIDGE 11 (F-17-NJ)
B104B	ENGINEERING GEOLOGY BRIDGE 12 (F-17-MQ)
B105	CONSTRUCTION LAYOUT
B106	CAISSON LAYOUT
B107	CAISSON DETAILS
B108	ABUTMENT 1 PLAN & ELEVATION BRIDGE 11 (F-17-NJ)
B109	ABUTMENT 1 PLAN & ELEVATION BRIDGE 12 (F-17-MQ)
B110	ABUTMENT 4 PLAN & ELEVATION BRIDGE 11 (F-17-NJ)
B111	ABUTMENT 4 PLAN & ELEVATION BRIDGE 12 (F-17-MQ)
B112	ABUTMENT 1 & 4 SECTIONS & DETAILS
B113	PIER 2 PLAN & ELEVATION BRIDGE 11 (F-17-NJ)
B114	PIER 2 PLAN & ELEVATION BRIDGE 12 (F-17-MQ)
B115	PIER 3 PLAN & ELEVATION BRIDGE 11 (F-17-NJ)
B116	PIER 3 PLAN & ELEVATION BRIDGE 12 (F-17-MQ)
B117	PIERS 2 & 3 SECTIONS & DETAILS
B118	COLORADO BT72 GIRDER
B119	INTERMEDIATE DIAPHRAGM DETAILS
B120	SUPERSTRUCTURE DETAILS
B121	PRECAST CONCRETE DECK PANELS (1)
B122	PRECAST CONCRETE DECK PANELS (2)
B123	PIERS 2 & 3 ALTERNATE CAISSON DETAILS
B123A	PIER 3 SOUTH ALTERNATE CAISSON DETAIL
B124	EXPANSION JOINT DETAILS
B125	MISCELLANEOUS DETAILS
B126	APPROACH SLAB DETAILS
B127	BRIDGE RAIL TYPE 7
B127A	CHAIN LINK FENCE DETAILS
B128	SLOPE PAVING DETAILS
B129	ABUTMENT BACKFILL DETAILS
B130	SOUNDWALL DETAILS
B131	BRIDGE DECK ELEVATIONS (1) F-17-NJ
B132	BRIDGE DECK ELEVATIONS (2) F-17-NJ
B133	BRIDGE DECK ELEVATIONS (3) F-17-MQ
B134	BRIDGE DECK ELEVATIONS (4) F-17-MQ

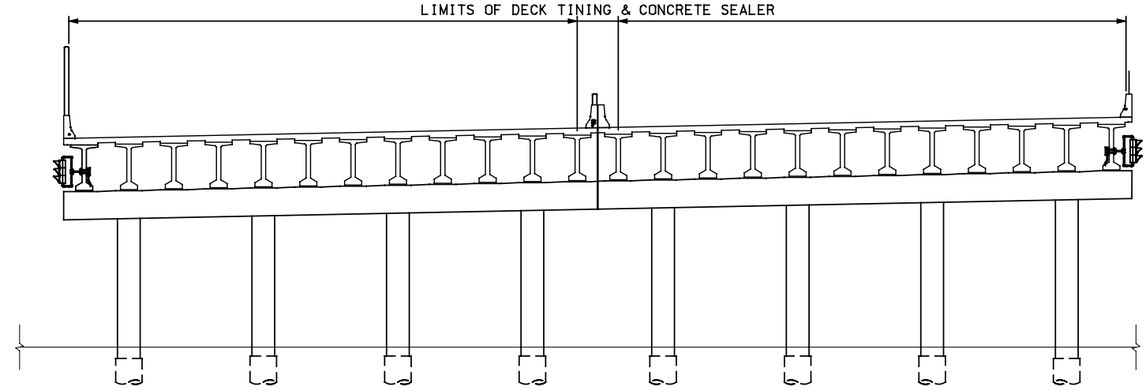

CONCRETE COATING DIAGRAM

BRIDGE DESCRIPTION

F-17-NJ & F-17-MQ - THREE SPAN BRIDGE (45', 164.5',45')
PRECAST PRESTRESSED CONCRETE I-GIRDERS (COLORADO BT-72)
I-25 OVER UNIVERSITY BLVD
ROADWAY CURB TO CURB 67'-5 1/2"
SKEW AT ALL ABUTMENTS AND PIERS 80°36'59.52"
BRIDGE RAIL TYPE 7 W/ENHANCED PARAPET

AS-BUILT

DESIGNED BY: SH	ISSUE RECORD		
	NO.	DESCRIPTION	DATE
DRAFTED BY: BU	1	APPROVED FOR CONSTRUCTION	10JUL02
	2	NDC 216 APPROVED FOR CONSTRUCTION - NOTES ADDED	31OCT02
	3	AFC - FDC S852 PIER 3 CAISSON CAP BEAM	26AUG03
CHECKED BY: CA	4	FDC S1100 - VINYL COATING FENCES, C.O. 096	23FEB04
	AB	AS-BUILT	21FEB07

T-REX METRO DENVER / COLORADO
Southeast Corridor Constructors
7200 South Alton Way Englewood, CO 80112

TC&B Turner Collie & Braden Inc.
Engineers • Planners • Project Managers

SOUTHEAST CORRIDOR MULTI-MODAL PROJECT
AREA 1.2
NB & SB I-25 OVER UNIVERSITY BLVD
GENERAL INFORMATION

STRUCTURE NO F-17-NJ & F-17-MQ | SECC BRIDGE NO 11 & 12

PROJECT NO./CODE NH 0252-299 11584
FILE NAME 12STN002
DRAWING NUMBER B101

File Name: C:\PWWORKING\DMS01213\12STN002.DGN
User: DALE.LARKEE
Time Plotted: 10:06:31 AM
Date Plotted: 03/19/2007
Pen Table: S:\MICROSTATION\PLOTTING\PENTABLES\T-REX-GRAY.TBL

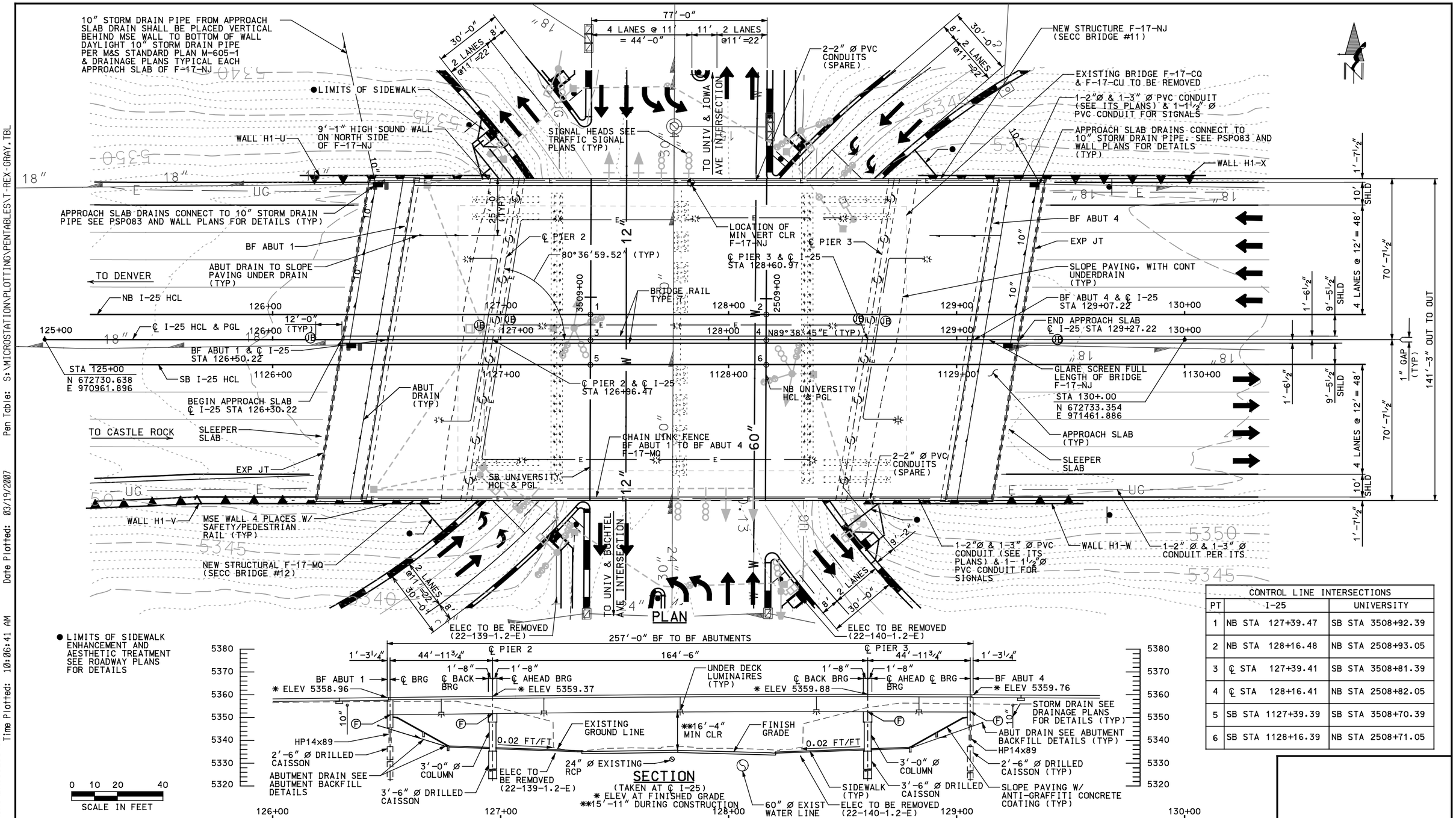

CONTROL LINE INTERSECTIONS		
PT	I-25	UNIVERSITY
1	NB STA 127+39.47	SB STA 3508+92.39
2	NB STA 128+16.48	NB STA 2508+93.05
3	℄ STA 127+39.41	SB STA 3508+81.39
4	℄ STA 128+16.41	NB STA 2508+82.05
5	SB STA 1127+39.39	SB STA 3508+70.39
6	SB STA 1128+16.39	NB STA 2508+71.05

DESIGNED BY: SH
DRAFTED BY: BU
CHECKED BY: CA

ISSUE RECORD

NO.	DESCRIPTION	DATE
C	FINAL DESIGN SUBMITTAL	03JUN02
1	APPROVED FOR CONSTRUCTION	10JUL02
2	NDC 216 AFC SHOW ABUT DRAIN, ABUT CAISSON SIZE REVISED	31OCT02
3	FDC S434 - PROFILE; FDC S1100 - COAT FENCES, C.O. 096	23FEB04
AB	AS-BUILT	21FEB07

T-REX METRO DENVER / COLORADO

Southeast Corridor Constructors
7200 South Alton Way
Englewood, CO 80112

Turner Collie & Braden Inc.
Engineers • Planners • Project Managers

SOUTHEAST CORRIDOR MULTI-MODAL PROJECT

AREA 1.2

NB & SB I-25 OVER UNIVERSITY BLVD

GENERAL LAYOUT

STRUCTURE NO F-17-NJ & F-17-MQ | SECC BRIDGE NO 11 & 12

PROJECT NO./CODE NH 0252-299 11584

FILE NAME 12STPL03

DRAWING NUMBER B102

AS-BUILT

File Name: C:\PWWORKING\DMS01213\12STPL03.DGN
User: DALE.LARKEE
Pen Table: S:\MICROSTATION\PLOTTING\PENTABLES\T-REX-GRAY.TBL
Date Plotted: 03/19/2007
Time Plotted: 10:06:41 AM

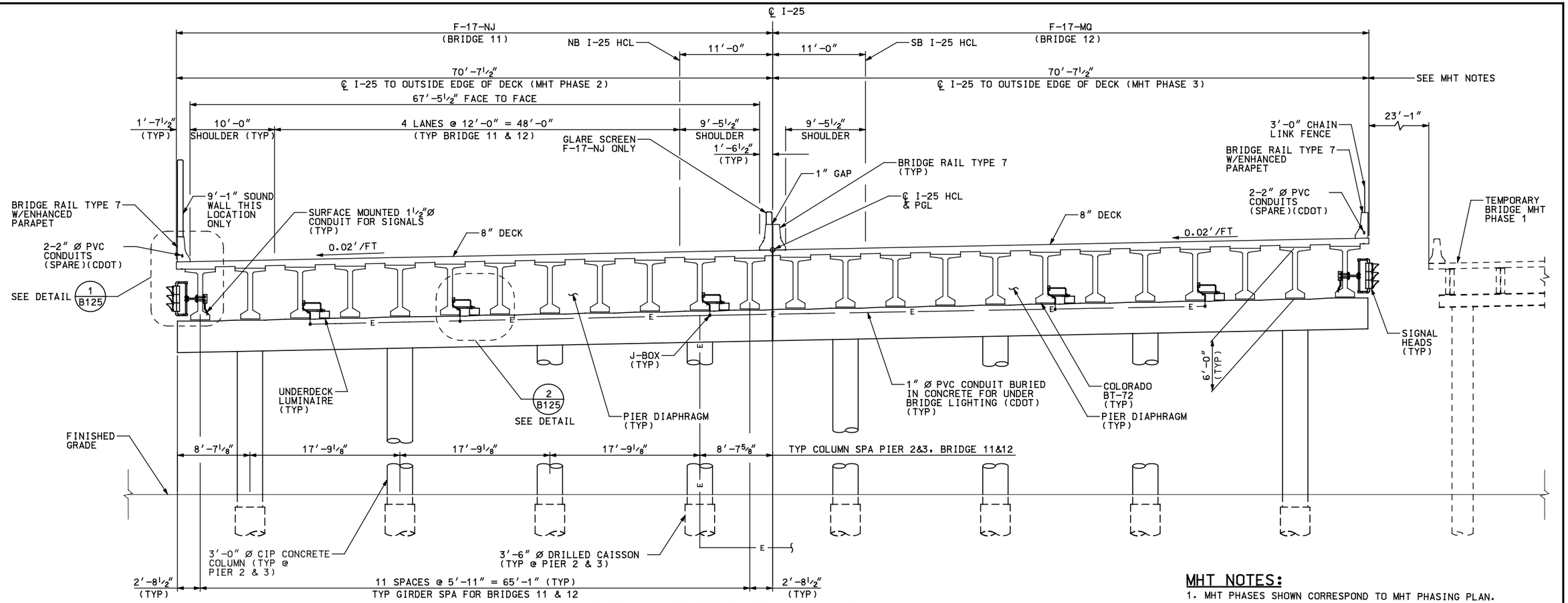

TYPICAL SECTION-SPANS 1 - 3

(TAKEN PERPENDICULAR TO I-25 HCL & PGL)
(LOOKING UP STATION)

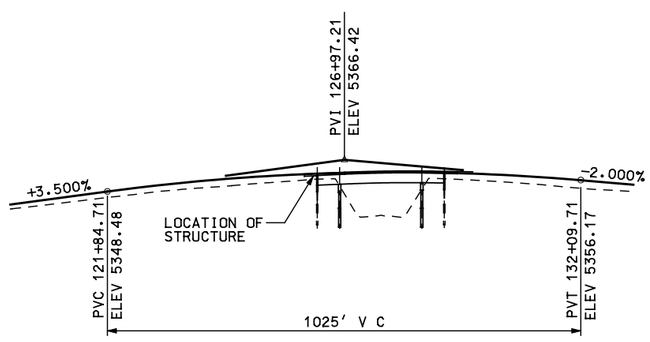

℄ I-25 PROFILE GRADE

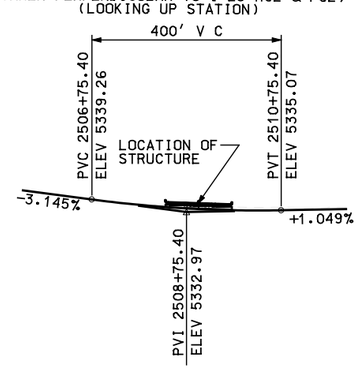

NB UNIV PROFILE GRADE

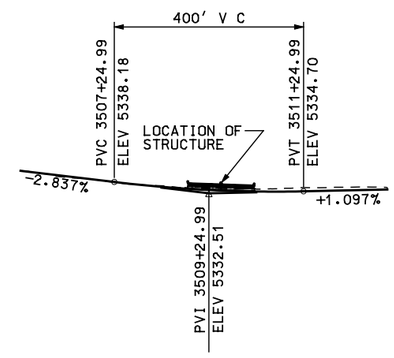

SB UNIV PROFILE GRADE

MHT NOTES:

1. MHT PHASES SHOWN CORRESPOND TO MHT PHASING PLAN.
2. MHT PHASE 1 (NOT SHOWN) CONSISTS OF CONSTRUCTION OF A TEMPORARY BRIDGE TO ACCOMMODATE CONSTRUCTION MHT PHASES 2 & 3.
3. MHT PHASE 2 WILL CONSIST OF SB I-25 TRAFFIC UTILIZING THE TEMPORARY STRUCTURE AND NB I-25 TRAFFIC UTILZING THE EXISTING SB STRUCTURE TO ALLOW FOR DEMOLITION OF THE EXISTING NB STRUCTURE AND CONSTRUCTION OF F-17-NJ (BRIDGE 11).
4. MHT PHASE 3 WILL CONSIST OF PLACING NB I-25 TRAFFIC ON F-17-NJ (BRIDGE 11) TO ACCOMMODATE CONSTRUCTION OF F-17-MQ (BRIDGE 12). SB I-25 TRAFFIC WILL REMAIN ON THE TEMPORARY STRUCTURE TO ACCOMMODATE DEMOLITION OF THE EXISTING SB STRUCTURE AND CONSTRUCTION OF F-17-MQ (BRIDGE 12).

DESIGNED BY: SH
DRAFTED BY: BU
CHECKED BY: CA

ISSUE RECORD

NO.	DESCRIPTION	DATE
C	FINAL DESIGN SUBMITTAL	03JUN02
1	APPROVED FOR CONSTRUCTION	10JUL02
2	NDC 216 APPROVED FOR CONSTRUCTION REVISED CONDUITS	31OCT02
3	FDC S434-PROFILE;FDC S508-CONDUIT;FDC S1100-FENCE,C.O.096	23FEB04
AB	AS-BUILT	21FEB07

T-REX METRO DENVER / COLORADO
Southeast Corridor Constructors
7200 South Alton Way
Englewood, CO 80112

TC&B Turner Collie & Braden Inc.
Engineers • Planners • Project Managers

SOUTHEAST CORRIDOR MULTI-MODAL PROJECT
AREA 1.2
NB & SB I-25 OVER UNIVERSITY BLVD
TYPICAL SECTION

STRUCTURE NO F-17-NJ & F-17-MQ
SECC BRIDGE NO 11 & 12

PROJECT NO./CODE NH 0252-299 11584
FILE NAME 12STPL13
DRAWING NUMBER B103

AS-BUILT

File Name: C:\PWWORKING\DMS01213\12STPL13.DGN
User: DALE.LARKEE
Time Plotted: 10:06:49 AM
Date Plotted: 03/19/2007
Pen Table: S:\MICROSTATION\PLOTTING\PENTABLES\T-REX-GRAY.TBL

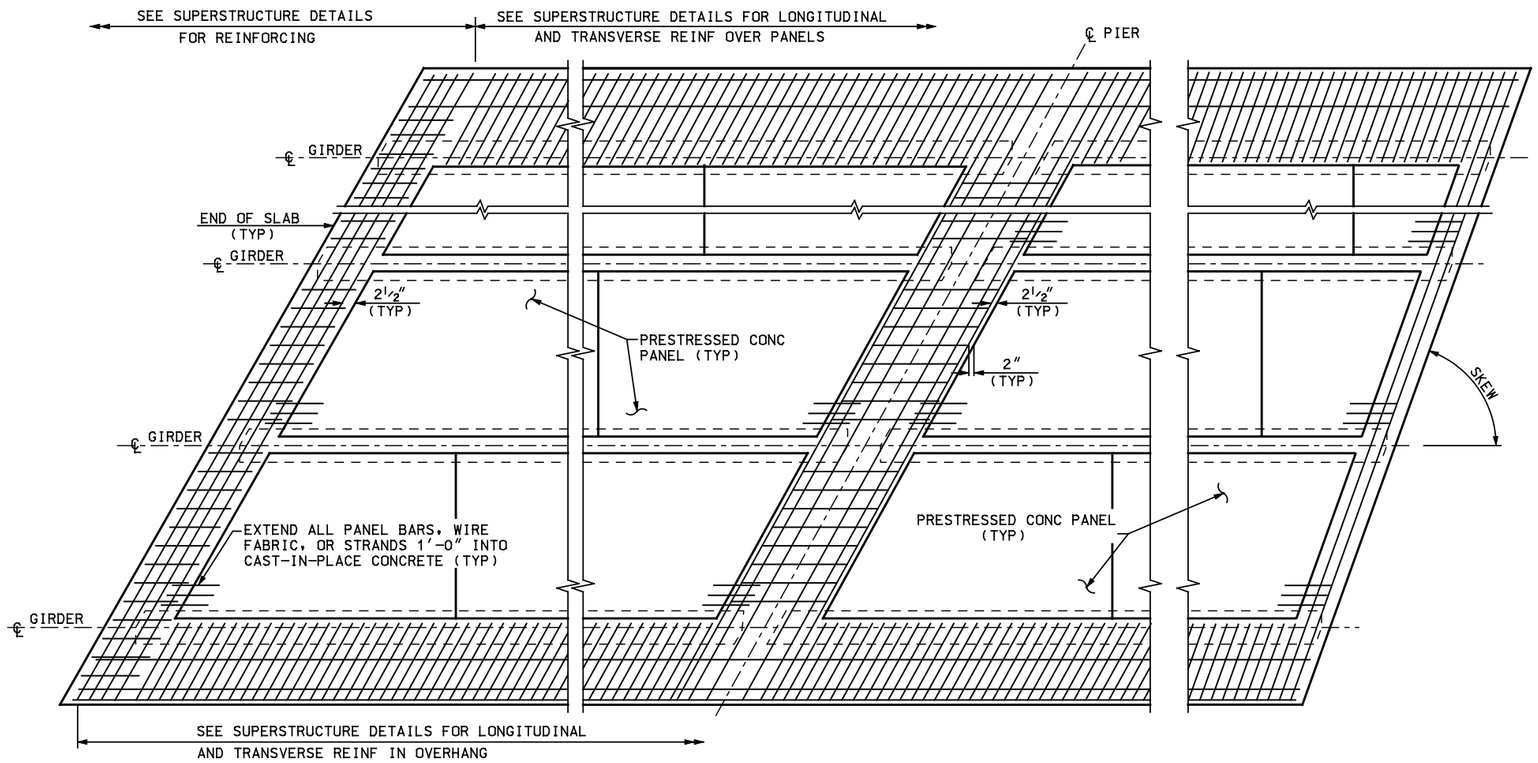

CONTINUOUS SLAB OVER PIER

PART PLAN

NOTES:

1. COMPOSITE TOTAL SLAB DESIGNED FOR HS 25-44 AND ALTERNATE MILITARY LOADING.
2. ALL CONCRETE SHALL BE CLASS S WITH RELEASE STRENGTH f'ci = 4500 PSI AND MINIMUM 28 DAY STRENGTH f'c = 6000 PSI. THE STRENGTH SHALL BE AT LEAST 5000 PSI AT THE TIME OF THE DECK POUR.
3. USE ⅜" Ø LOW RELAXATION STRANDS MEETING THE REQUIREMENTS OF ASTM A-416 GRADE 270. JACKING FORCE PER STRAND (Fj) SHALL BE AT LEAST 17.2 KIPS. FINAL FORCE PER STRAND (Ff) IS ESTIMATED TO BE 14.2 KIPS.
4. INSTALLATION OF BAR U (#3) IS MANDATORY. ALL FOUR BAR U (#3) LOOPS SHALL BE USED SIMULTANEOUSLY FOR LIFTING THE PANELS. ALTERNATE METHODS MAY BE USED, FOR LIFTING, PROVIDED THEY ARE SHOWN ON THE SHOP PLANS AND APPROVED BY THE ENGINEER.
5. CARE MUST BE TAKEN TO ENSURE PROPER CLEANING OF CONSTRUCTION DEBRIS AND CONSOLIDATION OF CONCRETE MORTAR UNDER THE EDGES OF THE PANELS. IT IS ALSO IMPORTANT THAT ADEQUATE SPACE (▲ MIN 1" X 2") IS PROVIDED FOR THE CONCRETE TO FILL THE SPACE UNDER THE PANEL AS THE SLAB CONCRETE IS PLACED. PANEL LENGTHS AND WIDTH SHALL BE DETERMINED BY THE CONTRACTOR AND SHOWN ON THE SHOP PLANS.
6. THE CONTRACTOR IS RESPONSIBLE FOR THE STABILITY OF THE PANELS ON THE GIRDERS. ERECTED PANELS SHALL BE UNIFORMLY SUPPORTED ALONG THE LENGTH OF THE PANEL. THE CONTRACTOR IS RESPONSIBLE FOR MEETING THE TOTAL SLAB THICKNESS SHOWN ON THE SUPERSTRUCTURE DETAILS.
7. ALL PLANES OF REINFORCING STEEL SHOWN IN THE SUPERSTRUCTURE DETAILS ARE REQUIRED FOR AREAS NOT FORMED WITH PRECAST PANELS.

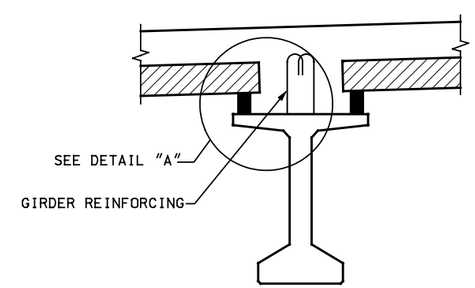

SUPPORT DETAIL

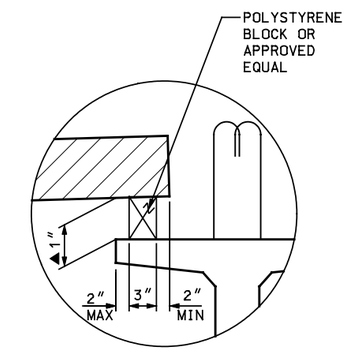

DETAIL "A"

File Name: C:\PWWORKING\DMS01213\12STDT40.DGN
User: DALE.LARKEE
Time Plotted: 10:03:33 AM
Date Plotted: 03/19/2007
Pen Table: S:\MICROSTATION\PLOTTING\PENTABLES\T-REX-GRAY.TBL

DESIGNED BY:	SH
DRAFTED BY:	SW
CHECKED BY:	CA

ISSUE RECORD

NO.	DESCRIPTION	DATE
B	IN-PROCESS DESIGN SUBMITTAL	30APR02
C	FINAL DESIGN SUBMITTAL	03JUN02
1	APPROVED FOR CONSTRUCTION	10JUL02
AB	AS-BUILT	21FEB07

T-REX METRO DENVER / COLORADO

Southeast Corridor Constructors
7200 South Alton Way
Englewood, CO 80112

TC&B Turner Collie & Braden Inc.
Engineers • Planners • Project Managers

SOUTHEAST CORRIDOR MULTI-MODAL PROJECT
AREA 1.2
NB & SB I-25 OVER UNIVERSITY BLVD
PRECAST CONCRETE DECK PANELS (2)

STRUCTURE NO F-17-NJ & F-17-MQ | SECC BRIDGE NO 11 & 12

PROJECT NO./CODE NH 0252-299 11584
FILE NAME 12STDT40
DRAWING NUMBER B122

AS-BUILT

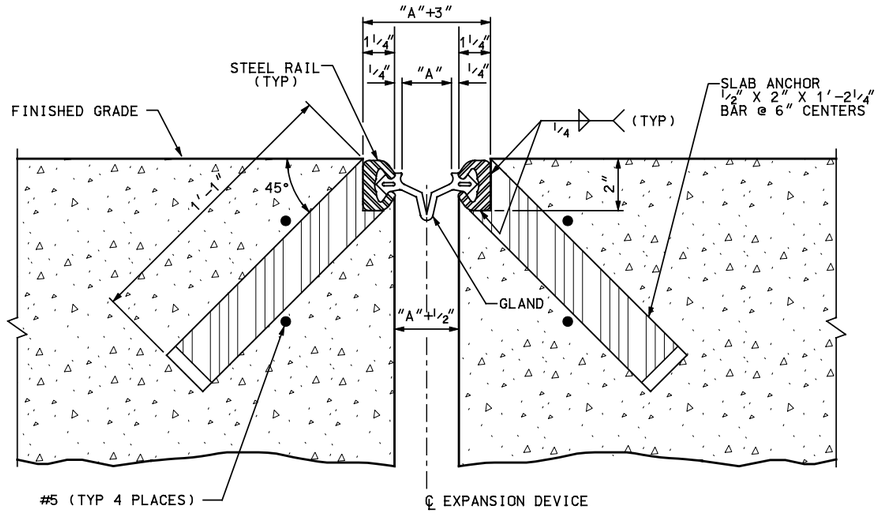

SECTION THRU STRIP SEAL BRIDGE EXPANSION DEVICE

SECTION TAKEN PERPENDICULAR TO ℄ EXPANSION DEVICE
SLAB REINFORCING NOT SHOWN

NOTES:

1. THE EXPANSION DEVICE SHALL BE INSTALLED ON GRADE, PARALLEL TO THE SLOPE AND GRADE OF THE APPROACH SLAB.
2. AFTER THE CONCRETE HAS ATTAINED INITIAL SET, THE ATTACHMENTS USED TO HOLD THE EXPANSION DEVICE ASSEMBLY IN ITS PROPER POSITION SHALL BE REMOVED.
3. STEEL RAILS AND ANCHORS SHALL BE GALVANIZED AFTER FABRICATION IN ACCORDANCE WITH AASHTO M111.
4. OPENING IN THE TYPE 7 RAIL TO BE CONSTRUCTED TO THE EXACT WIDTH OF THE EXISTING JOINT OPENING.
5. THE GLAND SHALL BE A ONE PIECE NEOPRENE EXTRUSION.

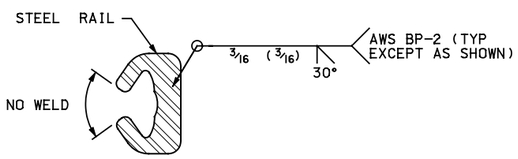

BUTT WELD DETAIL

ALL BUTT JOINTS IN STEEL RAIL (FIELD AND SHOP JOINTS) SHALL BE SINGLE V-GROOVE WELDS BP-2 WITH E-7016 OR E-7018 ELECTRODE. NO WELD IN INTERIOR OF RAIL WHERE IN CONTACT WITH RUBBER GLAND. GRIND WELD SMOOTH ON TOP SURFACE OF RAIL.

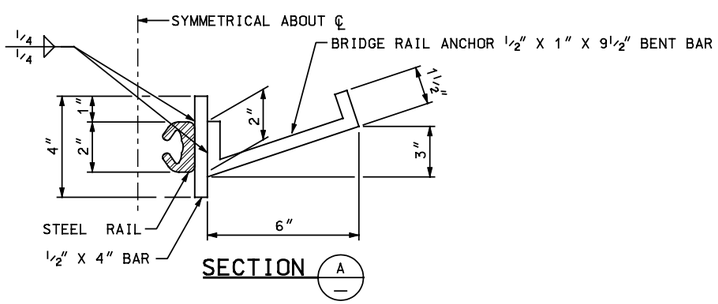

SECTION A

(THRU EXPANSION DEVICE AT BRIDGE RAIL UPTURN)

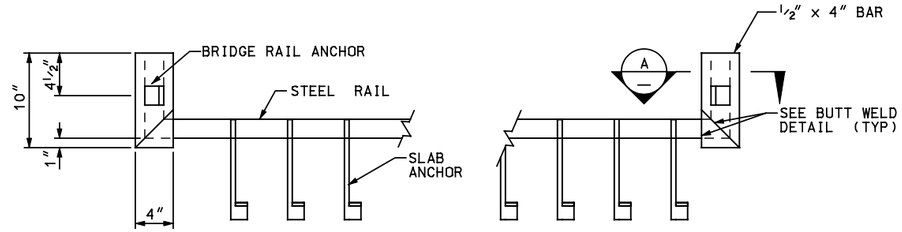

ELEVATION

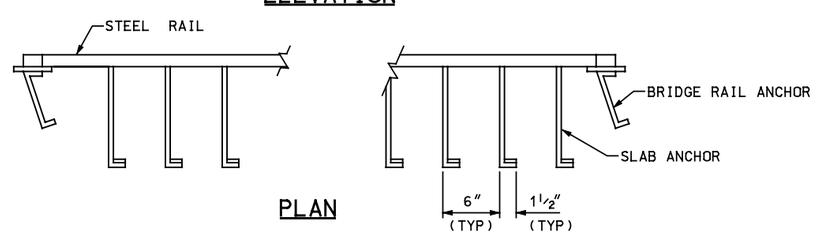

PLAN

STR. TEMP	"A"
30° F	2 1/4"
40° F	2 3/16"
50° F	2 1/16"
60° F	2"
70° F	1 7/8"
80° F	1 3/4"
90° F	1 5/8"
100° F	1 1/2"

DESIGNED BY: SH	ISSUE RECORD			
	NO.	DESCRIPTION	DATE	
DRAFTED BY: BU	B	IN-PROCESS DESIGN SUBMITTAL	30APR02	
	C	FINAL DESIGN SUBMITTAL	03JUN02	
CHECKED BY: CA	1	APPROVED FOR CONSTRUCTION	03JUN02	
	AB	AS-BUILT	21FEB07	

T-REX METRO DENVER / COLORADO

Southeast Corridor Constructors, 7200 South Alton Way, Englewood, CO 80112

TC&B Turner Collie & Braden Inc. Engineers • Planners • Project Managers

SOUTHEAST CORRIDOR MULTI-MODAL PROJECT
AREA 1.2
NB & SB I-25 OVER UNIVERSITY BLVD
EXPANSION JOINT DETAILS

STRUCTURE NO F-17-NJ & F-17-MQ | SECC BRIDGE NO 11 & 12

PROJECT NO./CODE NH 0252-299 11584

FILE NAME 12STDT36

DRAWING NUMBER B124

AS-BUILT

File Name: C:\PWWORKING\DMS01213\12STDT36.DGN
User: DALE.LARKEE
Date Plotted: 03/19/2007
Time Plotted: 10:03:16 AM
Pen Table: S:\MICROSTATION\PLOTTING\PENTABLES\T-REX-GRAY.TBL

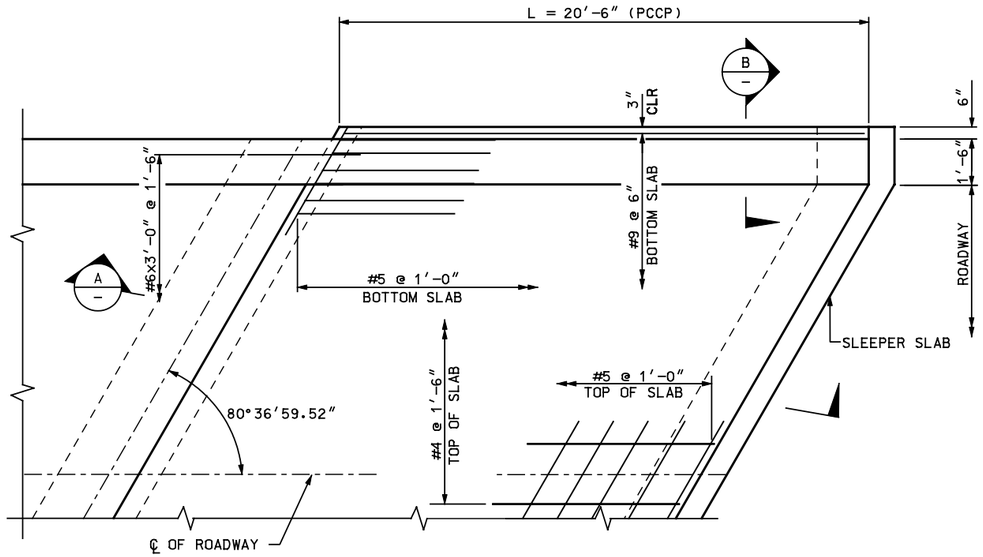

PLAN

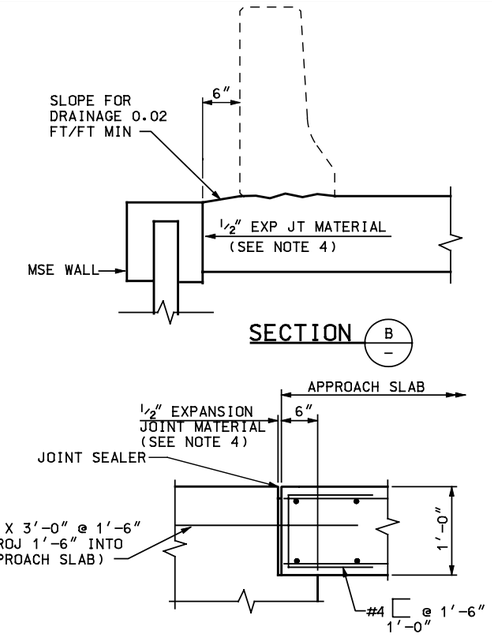

SECTION B

DETAIL 1

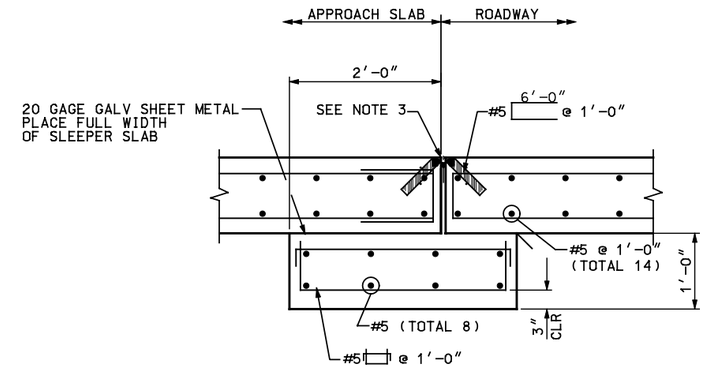

PCCP APPROACH

DETAIL 3

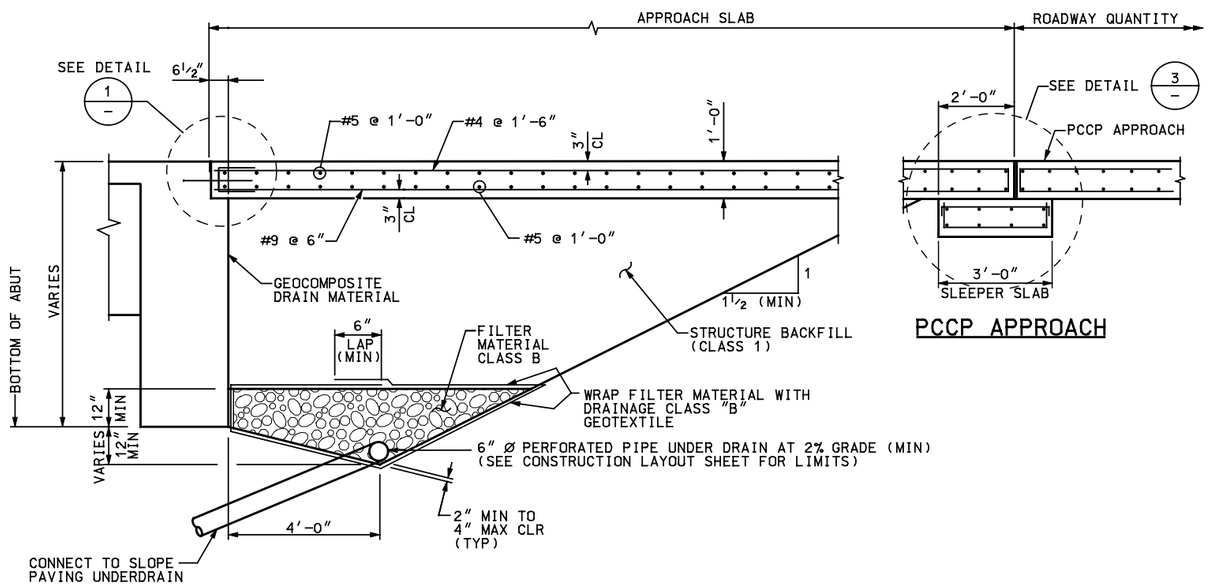

SECTION A

PCCP APPROACH

NOTES:

1. CONCRETE CLASS D (BRIDGE) SHALL BE USED FOR APPROACH SLABS.
2. FOR BRIDGE RAIL DETAILS SEE BRIDGE RAIL TYPE 7 SHEET.
3. SEE BRIDGE EXPANSION JOINT DETAILS SHEET FOR DETAILS.
4. USE CLOSED CELL, RIGID PLASTIC FOAM (STYROFOAM BRAND OR EQUAL). CUT RIGID PLASTIC FOAM TO CONFORM TO THE CROSS SECTION OF THE PAVEMENT AND FURNISH IN STRIPS EQUAL TO THE WIDTH OF THE PAVEMENT SLAB. MAKE THE TOP SURFACE SMOOTH AND HAVE HOLES PUNCHED FOR THE DOWEL BARS. PROVIDE A SNUG FIT WITHOUT LOSS IN THICKNESS OF THE MATERIAL.
5. DO NOT INSTALL JOINT SEALANT ABOVE 90°F OR BELOW 50°F.
6. SEE PSP083 AND PSP084 FOR DRAIN DETAILS AND "CONSTRUCTION LAYOUT" SHEET FOR DRAIN LOCATIONS.

DESIGNED BY: SW
DRAFTED BY: BU
CHECKED BY: CA

ISSUE RECORD

NO.	DESCRIPTION	DATE
B	IN-PROCESS DESIGN SUBMITTAL	30APR02
C	FINAL DESIGN SUBMITTAL	03JUN02
1	APPROVED FOR CONSTRUCTION	10JUL02
2	NDC 216 APPROVED FOR CONSTRUCTION ADD DRAIN PIPE	31OCT02
AB	AS-BUILT	21FEB07

T-REX METRO DENVER / COLORADO

Southeast Corridor Constructors
7200 South Alton Way
Englewood, CO 80112

TC&B Turner Collie & Braden Inc.
Engineers • Planners • Project Managers

SOUTHEAST CORRIDOR MULTI-MODAL PROJECT
AREA 1.2
NB & SB I-25 OVER UNIVERSITY BLVD
APPROACH SLAB DETAILS

STRUCTURE NO F-17-NJ & F-17-MQ
SECC BRIDGE NO 11 & 12

PROJECT NO./CODE NH 0252-299 11584
FILE NAME 12STPL21
DRAWING NUMBER B126

AS-BUILT

Pen Table: S:\MICROSTATION\PLOTTING\PENTABLES\T-REX-GRAY.TBL
Date Plotted: 03/19/2007
Time Plotted: 10:07:20 AM
File Name: C:\PWWORKING\DMS01213\12STPL21.DGN
User: DALE.LARKEE

DESIGN DATA

REINFORCED CONCRETE:
CLASS D CONCRETE: f'c = 4500 PSI
REINFORCING STEEL: fy = 60,000 PSI

NOTES:

1. BACKFILL RETAINING WALLS BEFORE BARRIER IS PLACED.
2. FOR BRIDGE RAIL TYPE 7 REINFORCING WITH SOUNDWALL, SEE SOUNDWALL DETAILS SHEET.

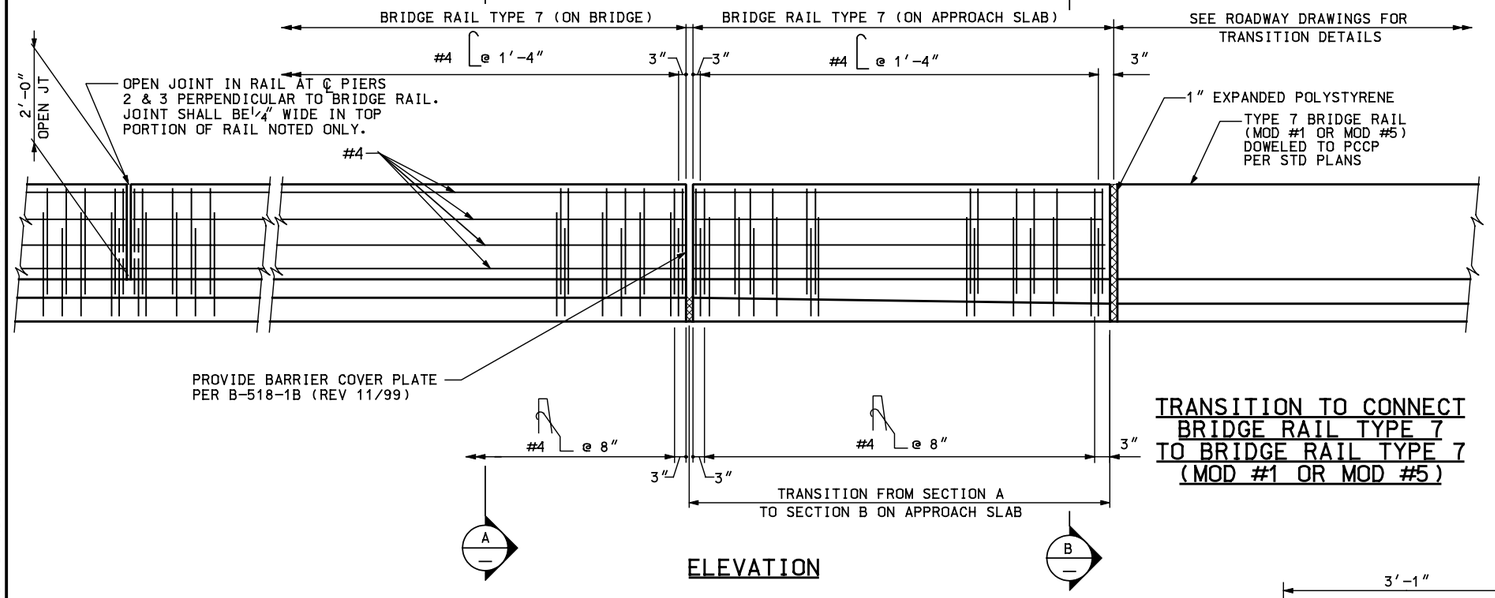

TRANSITION TO CONNECT BRIDGE RAIL TYPE 7 TO BRIDGE RAIL TYPE 7 (MOD #1 OR MOD #5)

ELEVATION

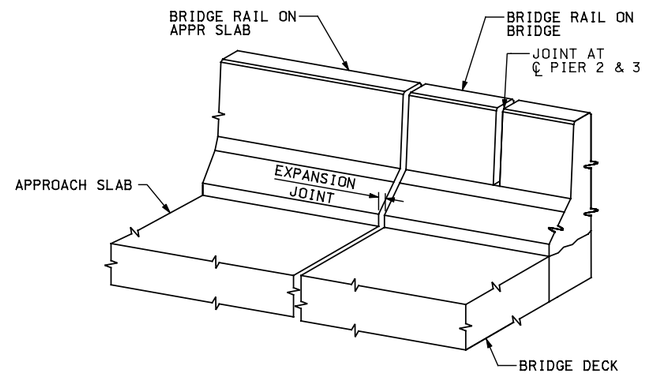

ISOMETRIC VIEW

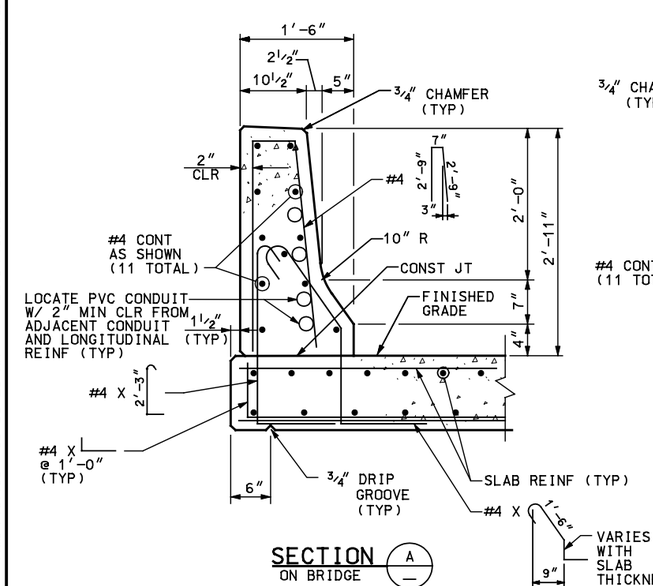

SECTION A ON BRIDGE

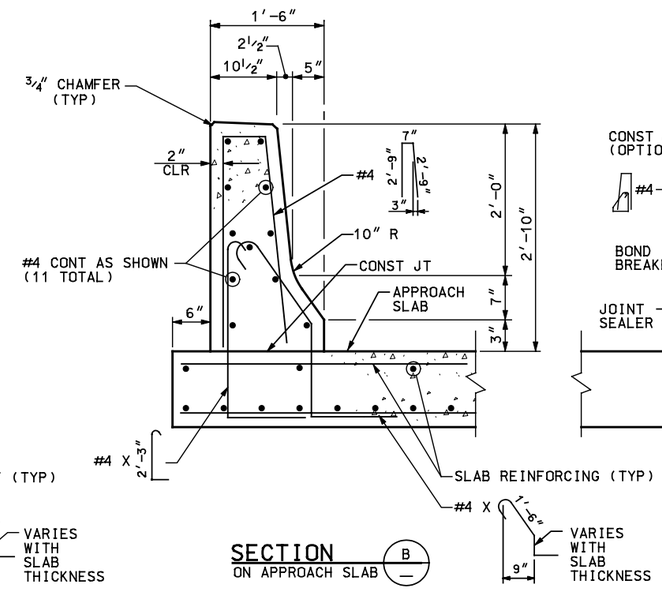

SECTION B ON APPROACH SLAB

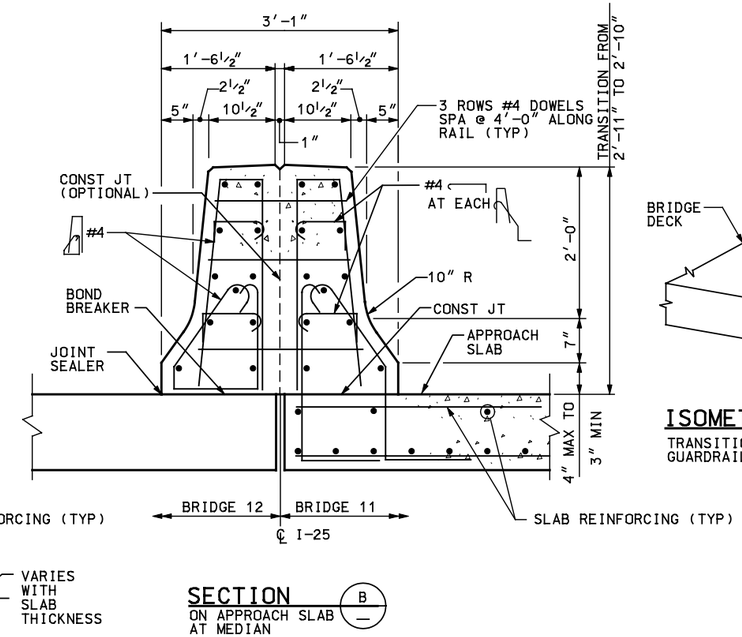

SECTION B ON APPROACH SLAB AT MEDIAN

FOR INFO NOT SHOWN SEE SECTION B ON APPROACH SLAB

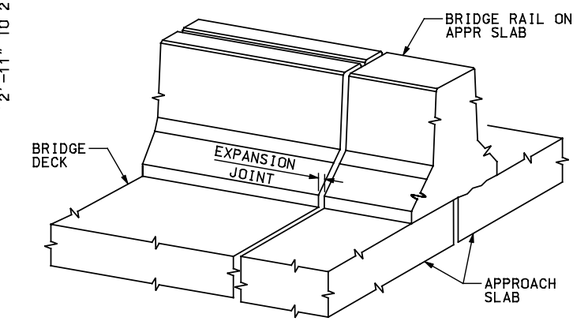

ISOMETRIC VIEW AT MEDIAN BARRIER

TRANSITION FROM BACK-TO-BACK TYPE 7 BRIDGE RAIL TO GUARDRAIL ON APPROACH SLAB

DESIGNED BY: SH	ISSUE RECORD		
	NO.	DESCRIPTION	DATE
DRAFTED BY: BU	B	IN-PROCESS DESIGN SUBMITTAL	30APR02
	C	FINAL DESIGN SUBMITTAL	03JUN02
	1	APPROVED FOR CONSTRUCTION	10JUL02
CHECKED BY: CA	2	NDC 216 APPR FOR CONST ADDED TRANSITION & JT AT PIERS	31OCT02
	AB	AS-BUILT	21FEB07

TREX METRO DENVER / COLORADO
Southeast Corridor Constructors 7200 South Alton Way Englewood, CO 80112
TC&B Turner Collie & Braden Inc. Engineers • Planners • Project Managers

SOUTHEAST CORRIDOR MULTI-MODAL PROJECT
AREA 1.2
NB & SB I-25 OVER UNIVERSITY BLVD
BRIDGE RAIL TYPE 7

STRUCTURE NO F-17-NJ & F-17-MQ | SECC BRIDGE NO 11 & 12

PROJECT NO./CODE NH 0252-299 11584
FILE NAME 12STDT38
DRAWING NUMBER B127

AS-BUILT

File Name: C:\PWWORKING\DMS01213\12STDT38.DGN
User: DALE.LARKEE
Time Plotted: 10:03:23 AM
Date Plotted: 03/19/2007
Pen Table: S:\MICROSTATION\PLOTTING\PENTABLES\T-REX-GRAY.TBL