GENERAL NOTES

EXPANSION JOINT MATERIAL SHALL MEET AASHTO SPECIFICATIONS M-213.

ALL PILING SHALL BE ASTM A709 GRADE 50

THE FINAL FINISH FOR THE SURFACES OF THE TYPE 7 BRIDGE RAIL AND CURBS SHALL BE CLASS 2. ALL OTHER EXPOSED CONCRETE SURFACES SHALL RECEIVE A CLASS 1 FINAL FINISH TO ONE FOOT BELOW THE GROUND LINE.

THE FOLLOWING STRUCTURAL STEEL SHALL BE AASHTO M-183 (ASTM A-36): DIAPHRAGMS, EXPANSION DEVICES, BEARING PLATES, BEARING DEVICES AND STIFFENERS.

ALL BOLTS SHALL BE 7/8" DIAMETER, HIGH STRENGTH, ASTM A325 UNLESS OTHERWISE NOTED.

GRADE 60 REINFORCING STEEL IS REQUIRED.

ALL REINFORCING STEEL SHALL BE EPOXY COATED UNLESS OTHERWISE NOTED.

(B) DENOTES NON COATED REINFORCING STEEL.

CHAMFER ALL EXPOSED EDGES OF CONCRETE 3/4" UNLESS OTHERWISE NOTED.

LEVELING PADS ARE UNLAMINATED ELASTOMERIC BEARING PADS. THEY SHALL BE CUT OR MOLDED FROM AASHTO ELASTOMER GRADE 3, 4 OR 5 AS DESCRIBED IN TABLES 705-1 AND 705-2 OF THE STANDARD SPECIFICATIONS WITH A DUROMETER (SHORE "A") HARDNESS OF 60.

UNLESS OTHERWISE NOTED, ALL CLEAR CONCRETE COVER OVER REINFORCING BARS SHALL BE 2 INCHES.

UNLESS OTHERWISED NOTED, ALL CONSTRUCTION JOINTS SHALL BE INTENTIONALLY ROUGHENED TO 1/4" AMPLITUDE.

THE FOLLOWING TABLE GIVES THE MINIMUM LAP SPLICE LENGTH FOR REINFORCING BARS PLACED IN ACCORDANCE WITH SUBSECTION 602.06

		BAR SIZE							
	CONCRETE	#4	#5	#6	#7	#8	#9	#10	#11
EPOXY	CLASS B	1'-7"	2'-0"	2'-7"	3'-6"	4'-7"	5'-9"	7'-3"	8'-11"
COATED	CLASS D	1'-7"	2'-0"	2'-5"	2'-10"	3'-9"	4'-8"	5'-11"	7'-4"
BLACK	CLASS B	1'-1"	1'-4"	1'-9"	2'-4"	3'-1"	3'-10"	4'-10"	6'-0"
REBAR	CLASS D	1'-1"	1'-4"	1'-7"	1'-11"	2'-6"	3'-2"	4'-0"	4'-11"

THESE SPLICES SHALL BE MODIFIED BY THE FOLLOWING FACTORS WHEN:

- REINFORCING IS SPACED BY LESS THAN 6" ON CENTER.....1.25
- TOP REINFORCEMENT - SO PLACED THAT MORE THAN 12" OF CONCRETE IS CAST BELOW THE REINFORCEMENT

  EPOXY COATED.....1.15

  BLACK BARS.....1.40

MECHANICAL COUPLERS SHALL PRODUCE 125% OF REBAR STRENGTH.

SPLICES OF BUNDLED BARS ARE NOT ALLOWED UNLESS NOTED ON THE PLANS, OR APPROVED BY THE ENGINEER.

THE CONTRACTOR SHALL BE RESPONSIBLE FOR THE STABILITY OF THE STRUCTURE DURING CONSTRUCTION.

STATIONS, ELEVATIONS, AND DIMENSIONS CONTAINED IN THESE PLANS ARE CALCULATED FROM A RECENT FIELD SURVEY. THE CONTRACTOR SHALL VERIFY ALL DEPENDENT DIMENSIONS IN THE FIELD BEFORE ORDERING OR FABRICATING ANY MATERIAL.

CONTRACTOR SHALL FOLLOW THE DIG SAFE PROGRAM ESTABLISHED FOR THIS PROJECT.

UTILITY LOCATIONS SHOWN ARE APPROXIMATE. THE CONTRACTOR SHALL VERIFY ALL UTILITY LOCATIONS PRIOR TO CONSTRUCTION.

CONTRACTOR SHALL SEAL THE BRIDGE DECK AND APPROACH SLAB SURFACE NO EARLIER THAN ONE YEAR AFTER THE DECK HAS BEEN POURED. SEALANT SHALL BE ONE OF THE FOLLOWING PRODUCTS AT SECC'S DISCRETION: SIKAPRONTO 19TF, SIKADUR 55SLV, OR DENEEF DENEDECK PER MANUFACTURER'S SPECIFICATIONS.

DESIGN DATA

AASHTO, SPECIFICATION 16TH EDITION WITH 1997, 1998, 1999 AND 2000 INTERIMS.

DESIGN METHOD: LOAD FACTOR DESIGN.

LIVE LOAD: HS-25-44 COLORADO PERMIT VEHICLE AND INTERSTATE ALTERNATE.
DEAD LOAD: ASSUMES 36 LBS. PER SQ. FT. FOR BRIDGE DECK OVERLAY

REINFORCED CONCRETE:
CLASS B CONCRETE: f'c = 3,000 psi
CLASS D CONCRETE: f'c = 4,500 psi
REINFORCING STEEL: fy = 60,000 psi

CAISSON CONCRETE:
CLASS BZ CONCRETE: f'c = 4,000 psi
REINFORCING STEEL: fy = 60,000 psi

STRUCTURAL STEEL: AASHTO M-183 (ASTM A-36) Fy = 36,000.
AASHTO M-223 (ASTM A-572) Fy = 50,000.

PRESTRESSED CONCRETE: CLASS S CONCRETE f'c = (SEE DETAILS ON BT SHEETS)
f's = 270,000 psi (LOW RELAXATION)

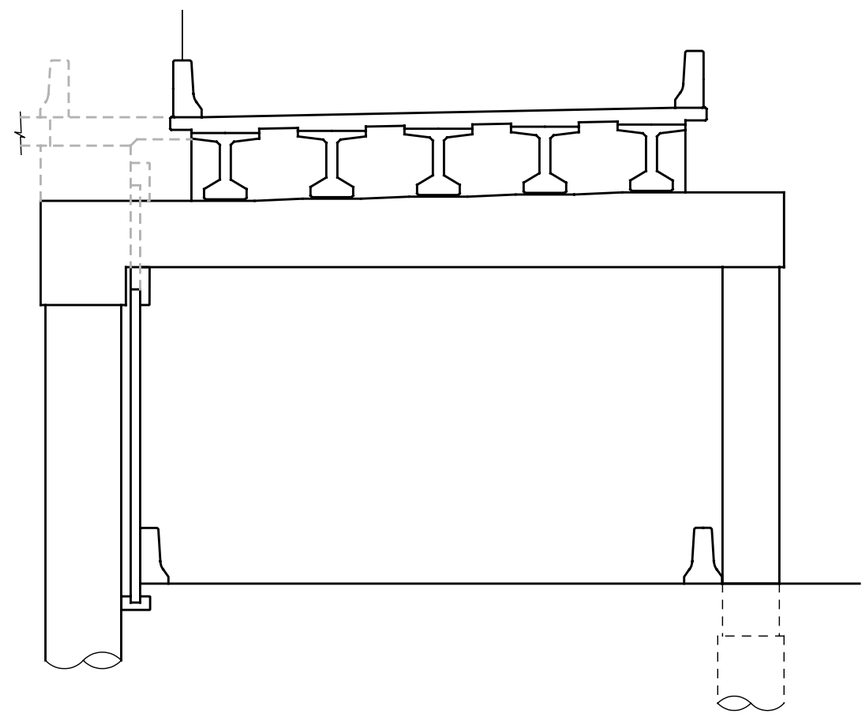

TYPICAL SECTION

INDEX OF DRAWINGS

B201 GENERAL INFORMATION
B202 GENERAL LAYOUT
B203 TYPICAL SECTION
B204 ENGINEERING GEOLOGY
B205 CONSTRUCTION LAYOUT (1)
B206 CONSTRUCTION LAYOUT (2)
B207 CAISSON LAYOUT
B208 CAISSON DETAILS (1)
B208A CAISSON DETAILS (2)
B209 ABUTMENT 1 DETAILS (1)
B210 ABUTMENT 1 DETAILS (2)
B211 ABUTMENT 4 DETAILS (1)
B212 ABUTMENT 4 DETAILS (2)
B213 PIER 2 DETAILS
B214 PIER 3 DETAILS
B215 MISC PIER DIAPHRAGM DETAILS
B216 BEARING DEVICE (TYPE I)
B217 COLORADO BT42 GIRDER
B218 GIRDER SCHEDULE & DETAILS
B219 INTERMEDIATE DIAPHRAGM DETAILS
B220 SLAB DETAILS (1)
B221 SLAB DETAILS AND APPROACH SLAB (2)
B222 SLAB DETAILS (3)
B223 SLAB DETAILS (4)
B224 PRECAST PANEL DECK FORMS (1)
B225 PRECAST PANEL DECK FORMS (2)
B226 ABUTMENT 1 APPROACH SLAB DETAILS
B227 BRIDGE RAIL TYPE 7
B227A CHAIN LINK FENCE DETAILS
B228 DECK DRAIN DETAILS (1)
B229 DECK DRAIN DETAILS (2)
B230 BRIDGE EXPANSION DEVICE (0-4 INCH)
B231 BRIDGE DECK ELEVATIONS (1)
B232 BRIDGE DECK ELEVATIONS (2)

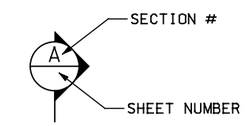

SECTION

BRIDGE DESCRIPTION

3 - SPAN (92'-11 5/8", 93'-3 3/8", 66'-2 3/4"), 252'-5 3/4" BRIDGE, ℄ BRG TO ℄ ABUT

25'-0" ROADWAY, CURB TO CURB

SPAN 1 THRU 2 - CONCRETE PRESTRESSED GIRDER, CONTINUOUS

SPAN 3 - CAST-IN-PLACE CONCRETE SLAB WITH EDGE BEAM

WASHINGTON TO NB I-25 OVER NB I-25 TO LINCOLN RAMP

SKEW 90° ABUT 1, 84°07'49" PIER 2 & 3, 10°26'32" ABUT 4

BRIDGE RAIL, TYPE 7

File Name: C:\PWWORKING\DMS00941\11STN00301.DGN
User: DALE.LARKEE
Time Plotted: 09:29:31 AM
Date Plotted: 03/22/2007
Pen Table: S:\MICROSTATION\PLOTTING\PENTABLES\T-REX-GRAY.TBL

DESIGNED BY: DLK
DRAFTED BY: DLK
CHECKED BY: MJJ

ISSUE RECORD

NO.	DESCRIPTION	DATE
B	IN-PROCESS DESIGN SUBMITTAL	20DEC02
C	FINAL DESIGN SUBMITTAL	04FEB03
2	REMOVED NOT FOR CONSTRUCTION & ADDED MISC NOTES	12MAR03
3	FDC S633 - REMOVE WALL; FDC S1100 - COAT FENCES, C.O. 096	23FEB04
AB	AS-BUILT	26FEB07

T-REX METRO DENVER / COLORADO
Southeast Corridor Constructors
7200 South Alton Way
Englewood, CO 80112

JE Sverdrup
A Jacobs Company

SOUTHEAST CORRIDOR MULTI-MODAL PROJECT
AREA 1.1
WASHINGTON TO NB I-25 OVER NB I-25 TO LINCOLN RAMP
GENERAL INFORMATION

STRUCTURE NO F-17-NB
SECC BRIDGE NO 3

PROJECT NO./CODE NH 0252-299 11584
FILE NAME 11STN00301
DRAWING NUMBER B201

AS-BUILT

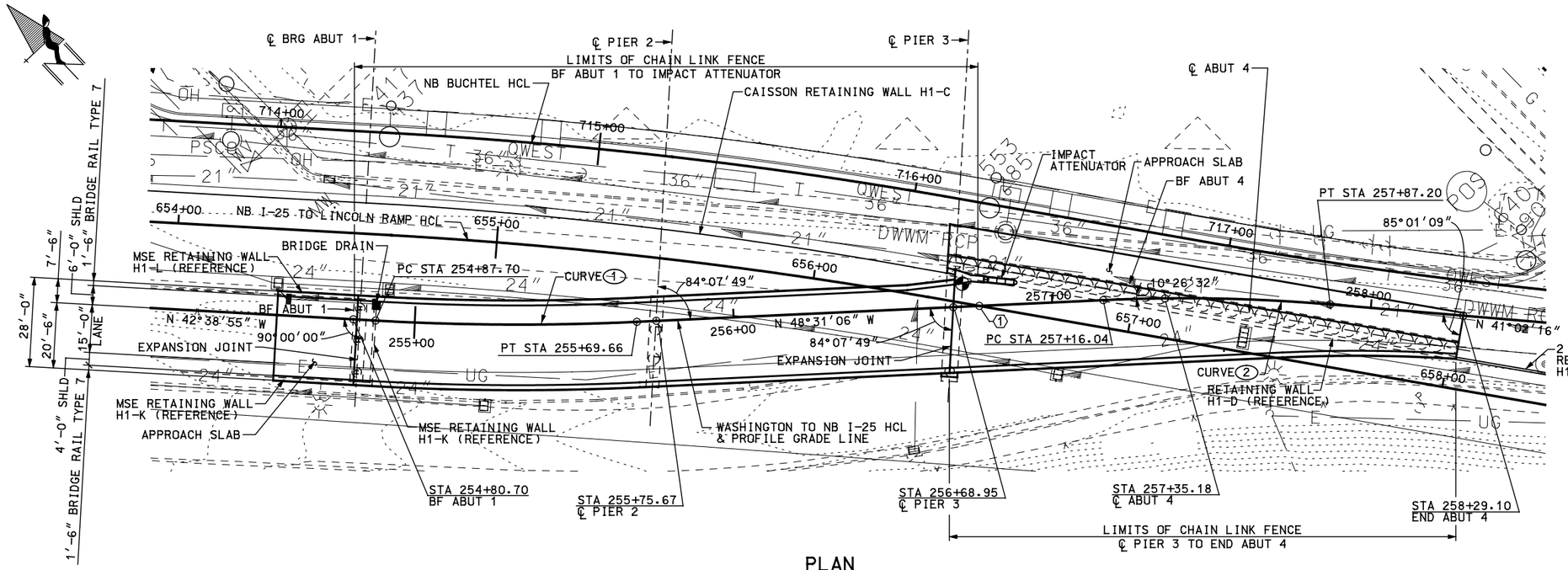

PLAN

INDICATES LOCATIONS OF MINIMUM PROPOSED VERTICAL CLEARANCE FOR HORIZONTAL CLEARANCE, SEE TYPICAL SECTION SHEET

(1) STA 256+77.13 WASHINGTON TO NB I-25
STA 656+52.65 NB I-25 TO LINCOLN RAMP

CURVE DATA

(1)

Δ = 5°52'11" LT
R = 800.00'
L = 81.96'
T = 41.01'
PI STA 255+28.71
PC STA 254+87.70
PT STA 255+69.66

CURVE DATA

(2)

Δ = 7°28'50" RT
R = 545.00'
L = 71.16'
T = 35.63'
PI STA 257+51.67
PC STA 257+16.04
PT STA 257+87.20

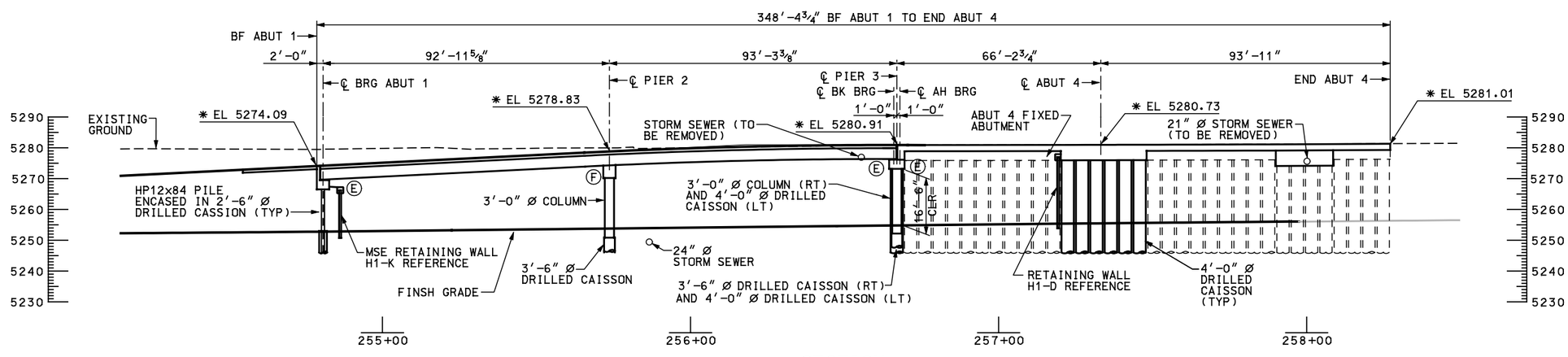

SECTION

SECTION TAKEN ALONG WASHINGTON TO NB I-25 HCL AND PROFILE GRADE LINE
EL FINISHED ROADWAY ELEVATIONS TAKEN AT WASHINGTON TO NB I-25 PROFILE GRADE LINE

DESIGNED BY: DLK
DRAFTED BY: DLK
CHECKED BY: MJJ

ISSUE RECORD

NO.	DESCRIPTION	DATE
C	IN-PROCESS DESIGN SUBMITTAL	20DEC02
D	FINAL DESIGN SUBMITTAL	04FEB03
2	APPROVED FOR CONSTRUCTION	12MAR03
3	FDC S633 - REMOVE WALL; FDC S1100 - COAT FENCES, C.O. 096	23FEB04
AB	AS-BUILT	26FEB07

T-REX METRO DENVER / COLORADO
Southeast Corridor Constructors
7200 South Alton Way
Englewood, CO 80112

JE Sverdrup
A Jacobs Company

SOUTHEAST CORRIDOR MULTI-MODAL PROJECT
AREA 1.1
WASHINGTON TO NB I-25 OVER NB I-25 TO LINCOLN RAMP
GENERAL LAYOUT

STRUCTURE NO F-17-NB
SECC BRIDGE NO 3

PROJECT NO./CODE NH 0252-299 11584
FILE NAME 11STPP0301
DRAWING NUMBER B202

AS-BUILT

File Name: C:\PWWORKING\DMS00941\11STPP0301.DGN
User: DALE.LARKEE
Pen Table: S:\MICROSTATION\PLOTTING\PENTABLES\T-REX-GRAY.TBL
Date Plotted: 03/22/2007
Time Plotted: 09:29:59 AM

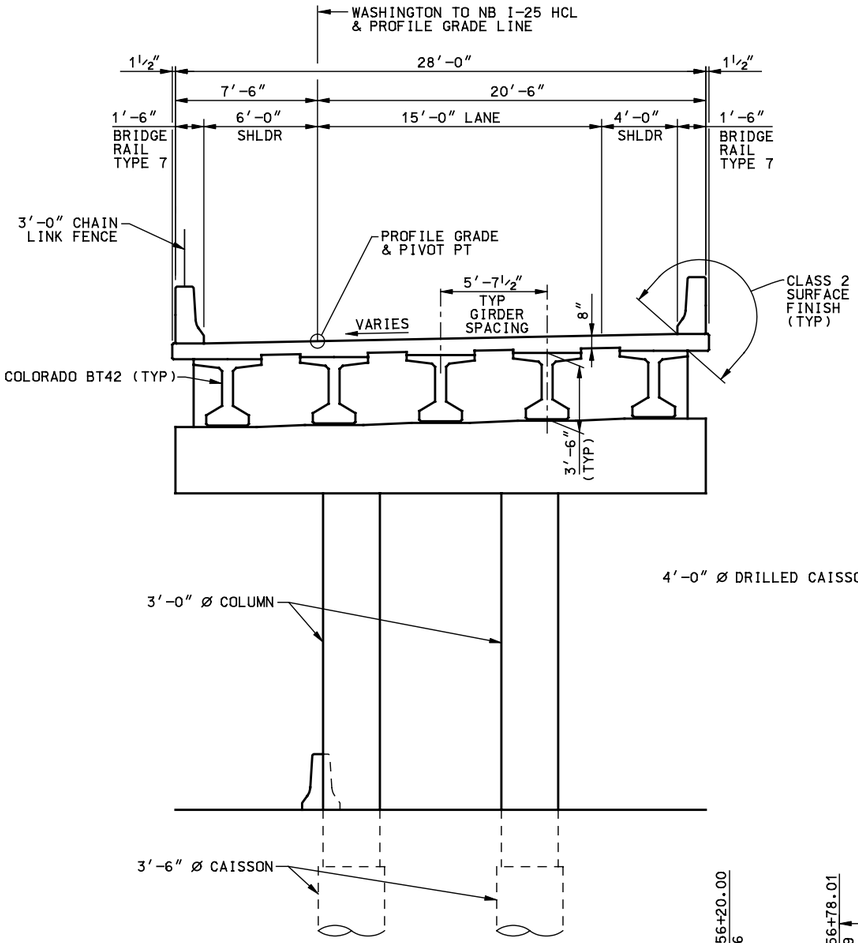

TYPICAL SECTION @ PIER 2

SECTION TAKEN PERPENDICULAR TO
WASHINGTON TO NB I-25 HCL AND PROFILE GRADE LINE
(LOOKING UPSTATION)

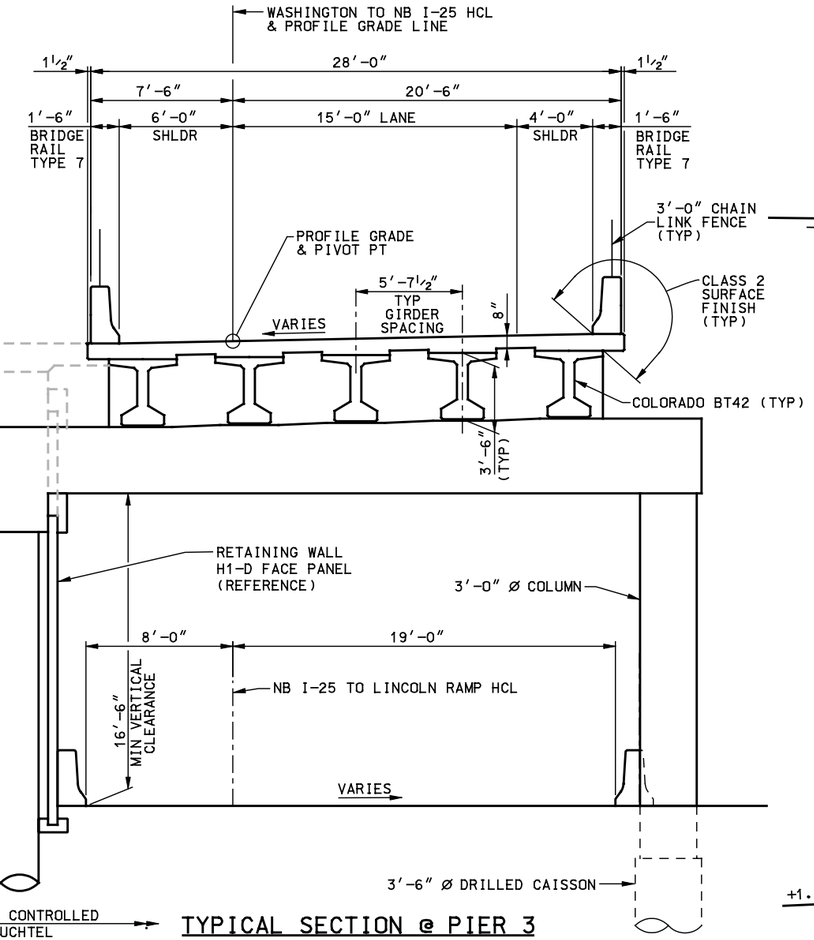

TYPICAL SECTION @ PIER 3

SECTION TAKEN PERPENDICULAR TO
WASHINGTON TO NB I-25 HCL AND PROFILE GRADE LINE
(LOOKING UPSTATION)

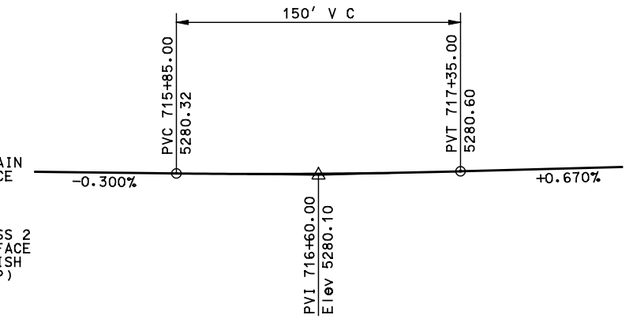

NB BUCHTEL

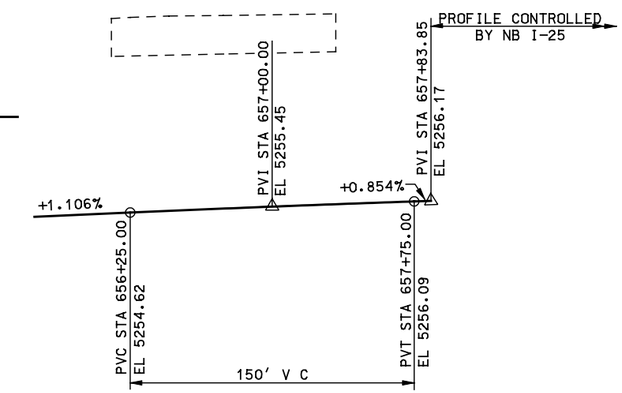

NB I-25 TO LINCOLN RAMP PROFILE GRADE

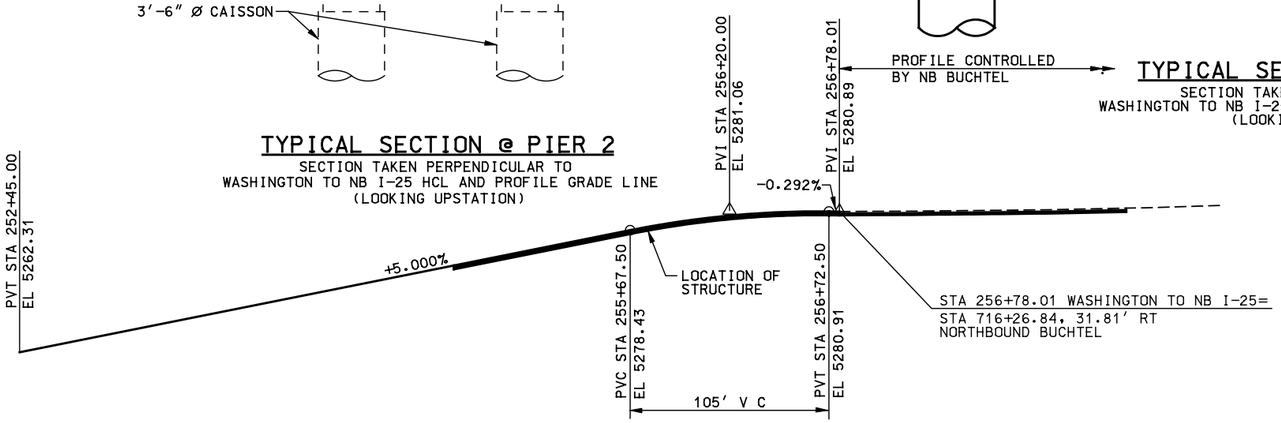

WASHINGTON TO NB I-25 PROFILE GRADE

* SUPERELEVATIONS (LOOKING UPSTATION)	
254+55.00	2% 2%
255+10.00	2% 4%
255+48.00	2% 4%
256+03.00	2% 2%
256+78.01= 716+26.84**	2% 2%
258+08.64= 717+55**	2% 2%
258+29.10= 717+75.46**	1.28% 1.28%

* SUPERELEVATIONS VARY LINEARLY BETWEEN STATIONS SHOWN.
** STATION ALONG NORTHBOUND BUCHTEL

File Name: C:\PWWORKING\DMS00941\11STTY0302.DGN
User: DALE.LARKEE
Time Plotted: 09:30:09 AM
Date Plotted: 03/22/2007
Pen Table: S:\MICROSTATION\PLOTTING\PENTABLES\T-REX-GRAY.TBL

DESIGNED BY: MCH
DRAFTED BY: DRA
CHECKED BY: HPL

ISSUE RECORD

NO.	DESCRIPTION	DATE
D	FINAL DESIGN SUBMITTAL	04FEB03
2	APPROVED FOR CONSTRUCTION	12MAR03
3	FDC S1100 - VINYL COATING FENCES, C.O. 096	23FEB04
4	FDC S1320 - MODIFY SUPERELEVATION & DECK ELEVATION	18JUN04
AB	AS-BUILT	26FEB07

T-REX METRO DENVER / COLORADO
Southeast Corridor Constructors
7200 South Alton Way
Englewood, CO 80112
JE Sverdrup A Jacobs Company

SOUTHEAST CORRIDOR MULTI-MODAL PROJECT
AREA 1.1
WASHINGTON TO NB I-25 OVER NB I-25 TO LINCOLN RAMP
TYPICAL SECTION

STRUCTURE NO F-17-NB
SECC BRIDGE NO 3

PROJECT NO./CODE NH 0252-299 11584
FILE NAME 11STTY0302
DRAWING NUMBER B203

AS-BUILT

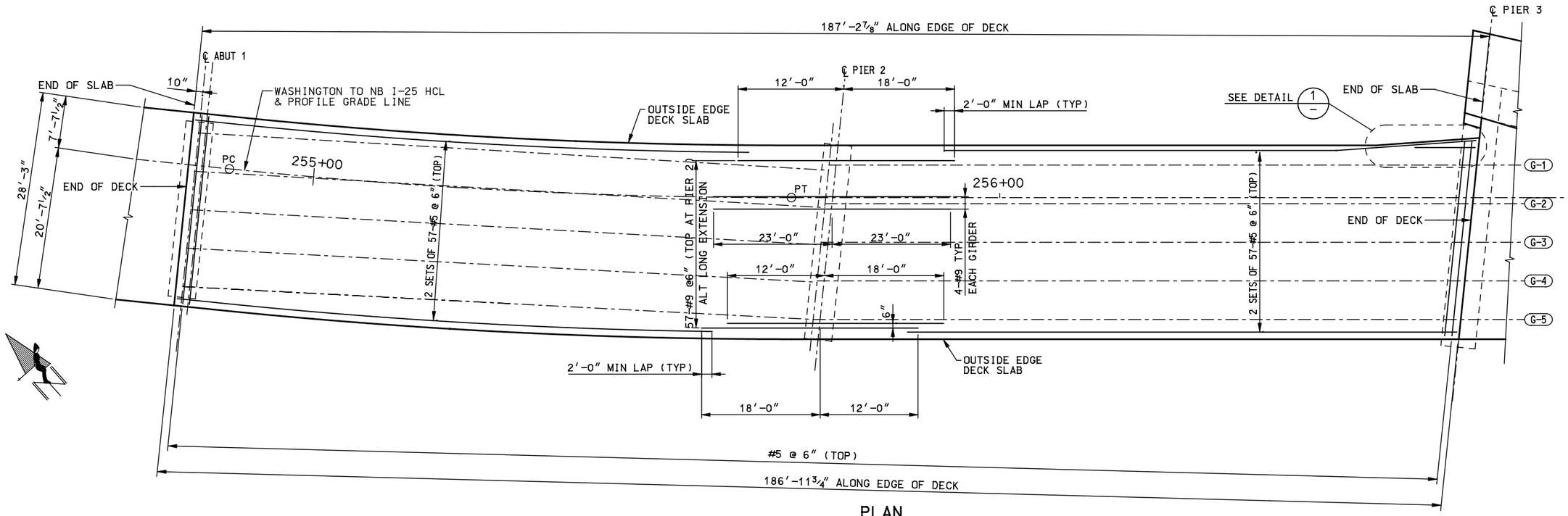

PLAN

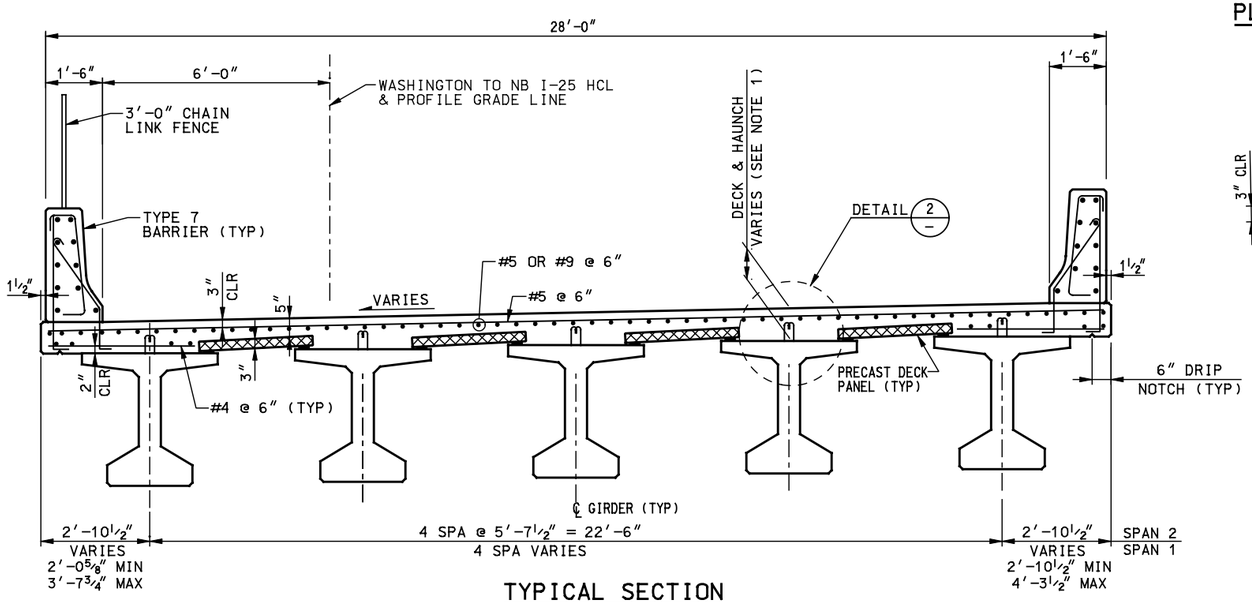

TYPICAL SECTION

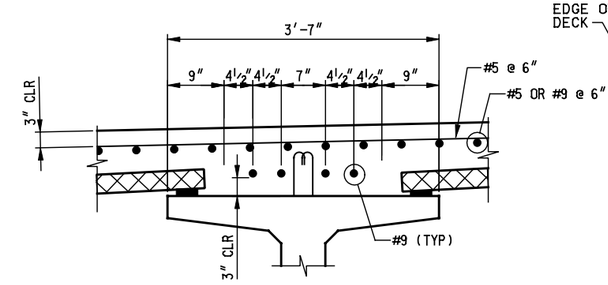

DETAIL 2

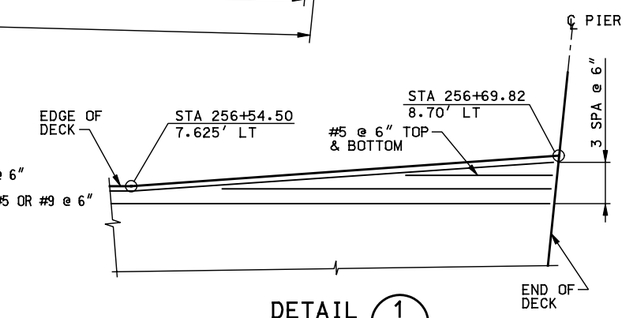

DETAIL 1

NOTES:

1. 11" AT ℄ BACK & AHEAD BRG ABUT 1 & PIER 2 & 3.
2. FOR ADDITIONAL REINFORCEMENT AT BRIDGE DRAINS, SEE DECK DRAIN DETAILS (1) SHEET.

DESIGNED BY: JA	ISSUE RECORD		
	NO.	DESCRIPTION	DATE
DRAFTED BY: ADH	A	IN-PROCESS DESIGN SUBMITTAL	20DEC02
	B	FINAL DESIGN SUBMITTAL	04FEB03
	1	APPROVED FOR CONSTRUCTION	12MAR03
CHECKED BY: MJJ	2	FDC S1100 - VINYL COATING FENCES, C.O. 096	23FEB04
	AB	AS-BUILT	26FEB07

TREX METRO DENVER / COLORADO

Southeast Corridor Constructors
7200 South Alton Way
Englewood, CO 80112

JE Sverdrup
A Jacobs Company

SOUTHEAST CORRIDOR MULTI-MODAL PROJECT
AREA 1.1
WASHINGTON TO NB I-25 OVER NB I-25 TO LINCOLN RAMP
SLAB DETAILS (1)

STRUCTURE NO F-17-NB | SECC BRIDGE NO 3

PROJECT NO./CODE NH 0252-299 11584
FILE NAME 11STDT0309
DRAWING NUMBER B220

AS-BUILT

File Name: C:\PWWORKING\DMS00941\11STDT0309.DGN
User: DALE.LARKEE
Time Plotted: 09:14:05 AM
Date Plotted: 03/22/2007
Pen Table: S:\MICROSTATION\PLOTTING\PENTABLES\T-REX-GRAY.TBL

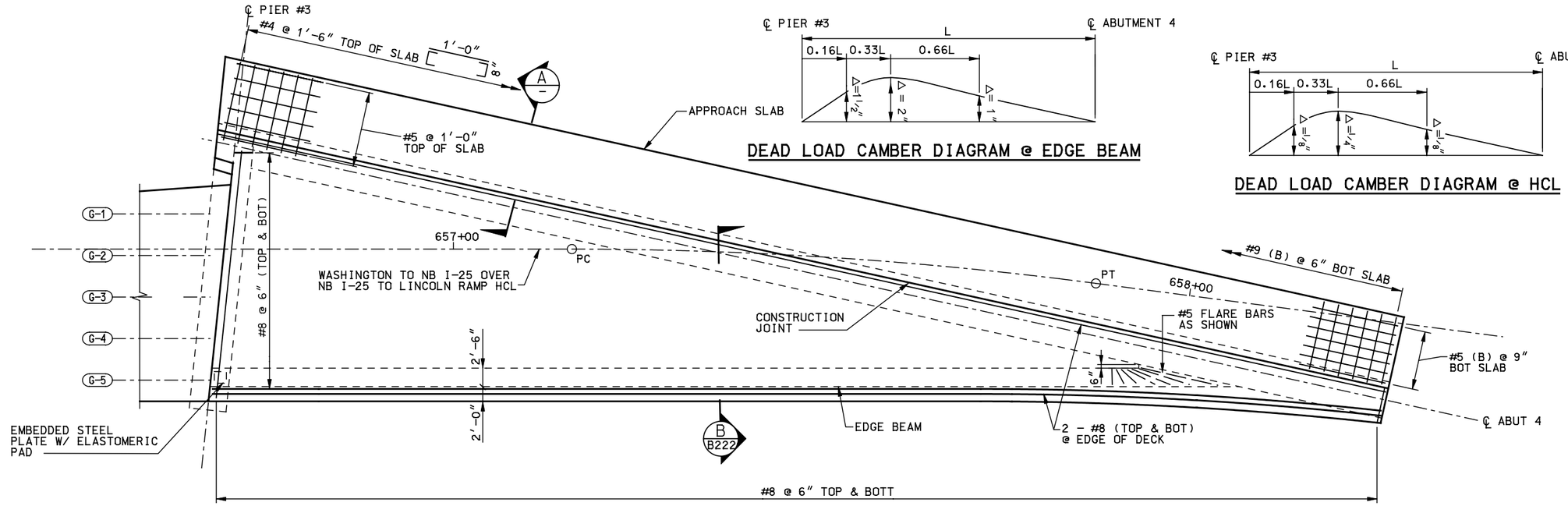

PLAN

DEAD LOAD CAMBER DIAGRAM @ EDGE BEAM

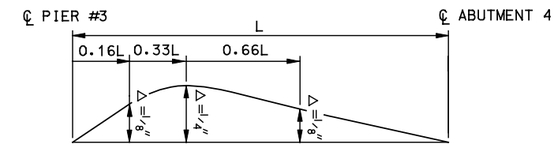

DEAD LOAD CAMBER DIAGRAM @ HCL

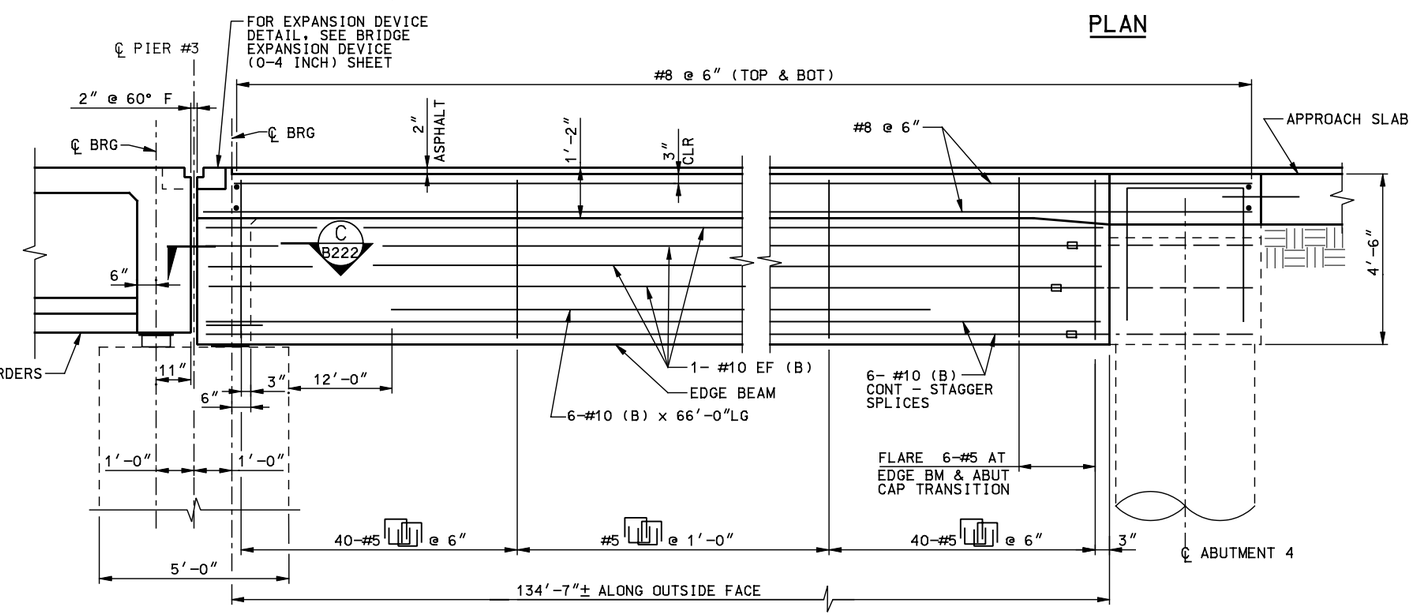

ELEVATION

NOTE: FOR REINFORCEMENT THRU PIER #3 SEE TYPICAL SECTION SHEET

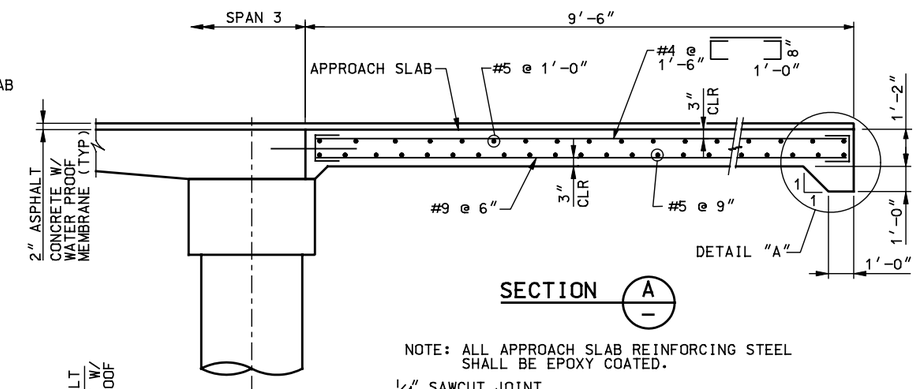

SECTION A

NOTE: ALL APPROACH SLAB REINFORCING STEEL SHALL BE EPOXY COATED.

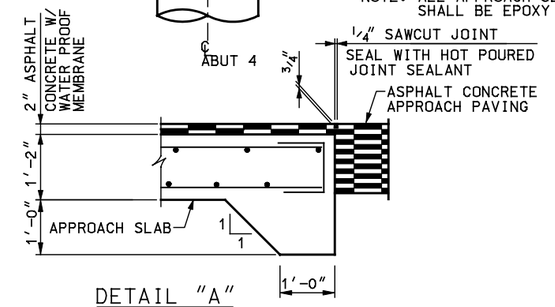

DETAIL "A"

DESIGNED BY: MJJ	ISSUE RECORD		
	NO.	DESCRIPTION	DATE
DRAFTED BY: ADH	A	IN-PROCESS DESIGN SUBMITTAL	20DEC02
	B	FINAL DESIGN SUBMITTAL	04FEB03
	1	APPROVED FOR CONSTRUCTION	12MAR03
CHECKED BY: MJJ /KF	AB	AS-BUILT	26FEB07

T-REX METRO DENVER / COLORADO

Southeast Corridor Constructors
7200 South Alton Way
Englewood, CO 80112

JE Sverdrup
A Jacobs Company

SOUTHEAST CORRIDOR MULTI-MODAL PROJECT
AREA 1.1
WASHINGTON TO NB I-25 OVER NB I-25 TO LINCOLN RAMP
SLAB DETAILS AND APPROACH SLAB (2)

STRUCTURE NO F-17-NB | SECC BRIDGE NO 3

PROJECT NO./CODE NH 0252-299 11584

FILE NAME 11STDT0311

DRAWING NUMBER B221

AS-BUILT

File Name: C:\PWWORKING\DMS00941\11STDT0311.DGN
User: DALE.LARKEE
Time Plotted: 09:14:10 AM
Date Plotted: 03/22/2007
Pen Table: S:\MICROSTATION\PLOTTING\PENTABLES\T-REX-GRAY.TBL

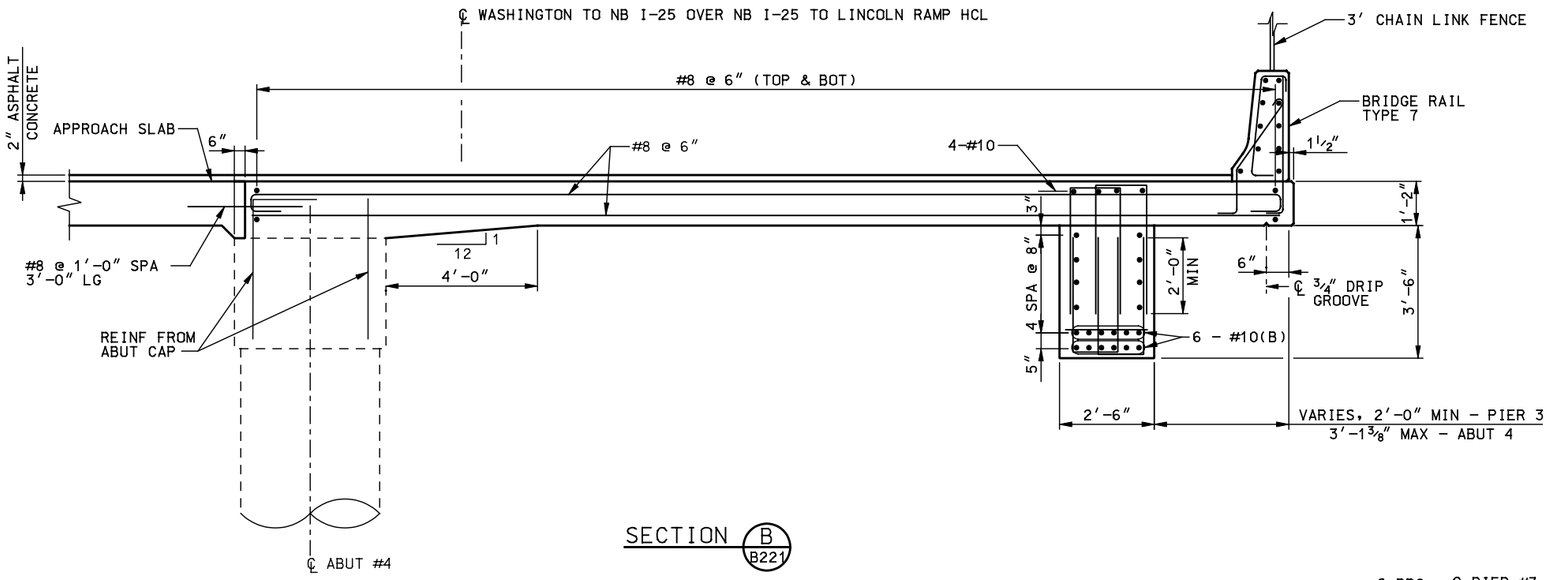

SECTION B / B221

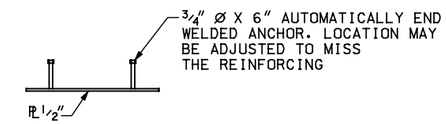

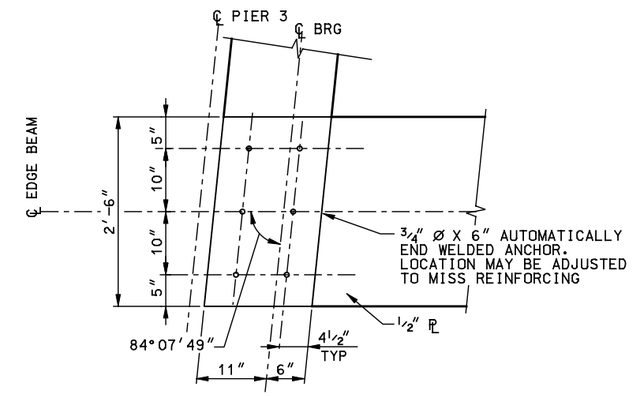

SECTION C / B221
GALVANIZE AFTER FABRICATION

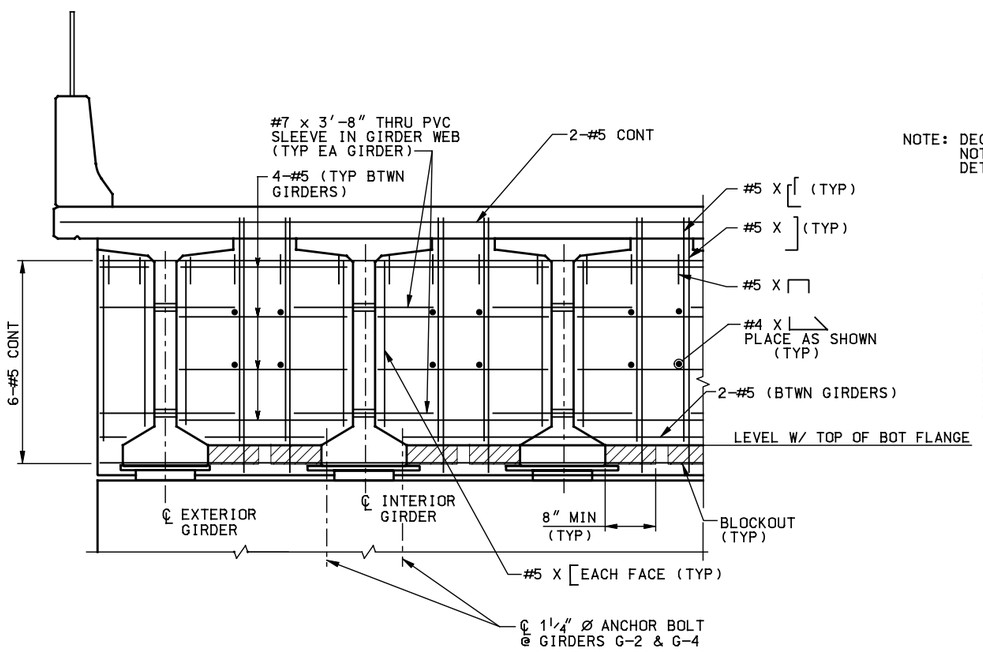

ELEVATION @ GIRDER DIAPHRAGM

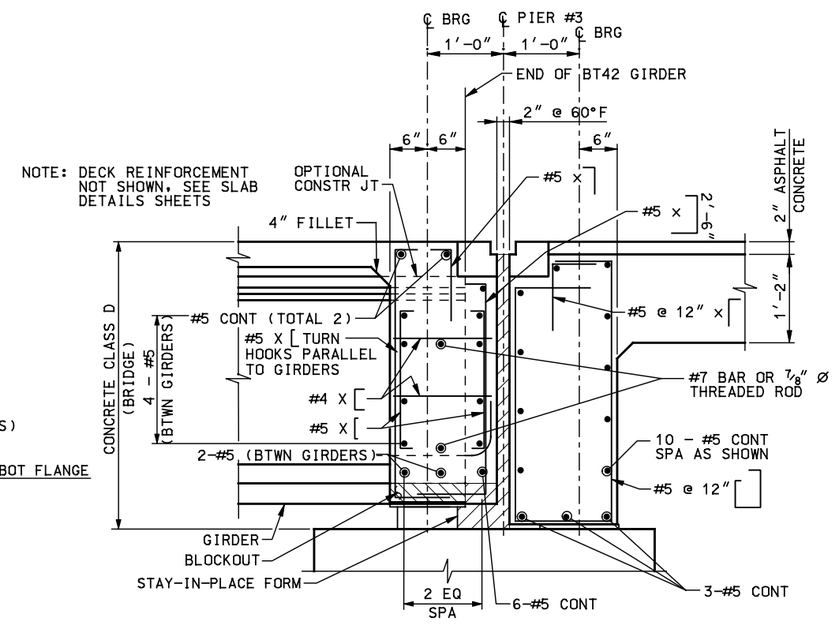

TYPICAL SECTION THRU PIER #3

NOTE: ALL DIMENSIONS SHOWN ARE NORMAL TO ℄ BRG ABUTMENT

File Name: C:\PWWORKING\DMS00941\11STDT0310.DGN
User: DALE.LARKEE
Pen Table: S:\MICROSTATION\PLOTTING\PENTABLES\T-REX-GRAY.TBL
Date Plotted: 03/22/2007
Time Plotted: 09:14:08 AM

DESIGNED BY: MJJ
DRAFTED BY: ADH
CHECKED BY: MJJ /KF

ISSUE RECORD

NO.	DESCRIPTION	DATE
A	IN-PROCESS DESIGN SUBMITTAL	20DEC02
B	FINAL DESIGN SUBMITTAL	04FEB03
1	APPROVED FOR CONSTRUCTION	12MAR03
2	FDC S633-WALL; FDC S1067-EPOXY; FDC S1100-FENCE, C.O. 096	23FEB04
AB	AS-BUILT	26FEB07

T-REX METRO DENVER / COLORADO
Southeast Corridor Constructors 7200 South Alton Way Englewood, CO 80112
JE Sverdrup A Jacobs Company

SOUTHEAST CORRIDOR MULTI-MODAL PROJECT
AREA 1.1
WASHINGTON TO NB I-25 OVER NB I-25 TO LINCOLN RAMP
SLAB DETAILS (3)

STRUCTURE NO F-17-NB
SECC BRIDGE NO 3

PROJECT NO./CODE NH 0252-299 11584
FILE NAME 11STDT0310
DRAWING NUMBER B222

AS-BUILT

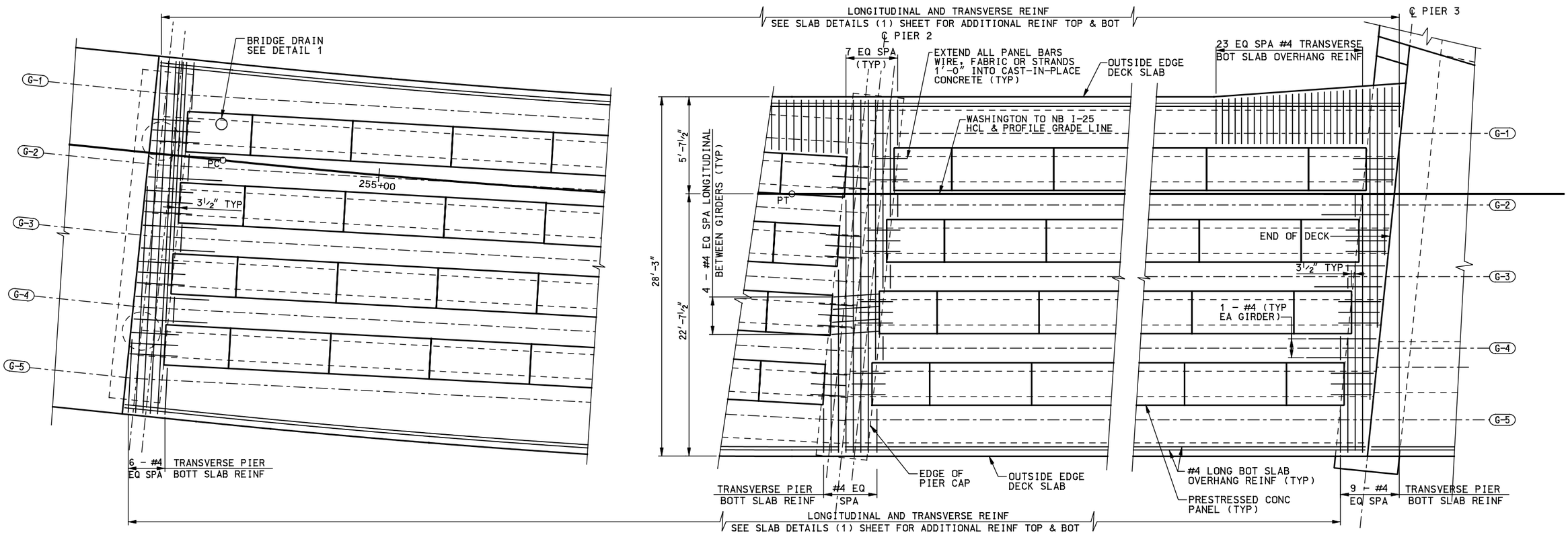

NOTES:

1. COMPOSITE TOTAL SLAB DESIGNED FOR HS 25-44 AND ALTERNATE MILITARY LOADING.
2. ALL CONCRETE SHALL BE CLASS S WITH RELEASE STRENGTH $f'c_i$ = 4500 PSI AND MINIMUM 28 DAY STRENGTH $f'c$ = 6000 PSI. THE STRENGTH SHALL BE AT LEAST 5000 PSI AT THE TIME OF THE DECK POUR.
3. USE ⅜"Ø LOW RELAXATION STRANDS MEETING THE REQUIREMENTS OF ASTM A-416 GRADE 270. JACKING FORCE PER STRAND (F_j) SHALL BE AT LEAST 17.2 KIPS. FINAL FORCE PER STRAND (F_f) IS ESTIMATED TO BE 14.2 KIPS.
4. INSTALLATION OF BAR U (#3) IS MANDATORY. ALL FOUR BAR U (#3) LOOPS SHALL BE USED SIMULTANEOUSLY FOR LIFTING THE PANELS. ALTERNATE METHODS MAY BE USED, FOR LIFTING, PROVIDED THEY ARE SHOWN ON THE SHOP PLANS AND APPROVED BY THE ENGINEER.
5. CARE MUST BE TAKEN TO ENSURE PROPER CLEANING OF CONSTRUCTION DEBRIS AND CONSOLIDATION OF CONCRETE MORTAR UNDER THE EDGES OF THE PANELS. IT IS ALSO IMPORTANT THAT ADEQUATE SPACE (▲ MIN 1" X 2") IS PROVIDED FOR THE CONCRETE TO FILL THE SPACE UNDER THE PANEL AS THE SLAB CONCRETE IS PLACED. PANEL LENGTHS AND WIDTH SHALL BE DETERMINED BY THE CONTRACTOR AND SHOWN ON THE SHOP PLANS.
6. THE CONTRACTOR IS RESPONSIBLE FOR THE STABILITY OF THE PANELS ON THE GIRDERS. ERECTED PANELS SHALL BE UNIFORMLY SUPPORTED ALONG THE LENGTH OF THE PANEL. THE CONTRACTOR IS RESPONSIBLE FOR MEETING THE TOTAL SLAB THICKNESS SHOWN ON THE SUPERSTRUCTURE DETAILS.
7. ALL PLANES OF REINFORCING STEEL SHOWN IN THE SUPERSTRUCTURE DETAILS ARE REQUIRED FOR AREAS NOT FORMED WITH PRECAST PANELS.

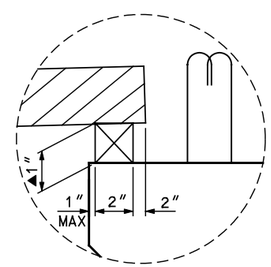

DETAIL "A"

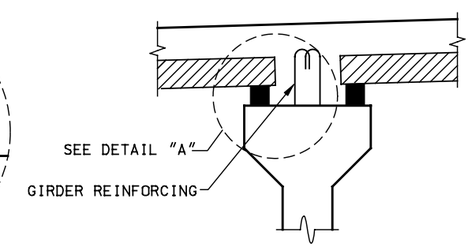

SUPPORT DETAIL

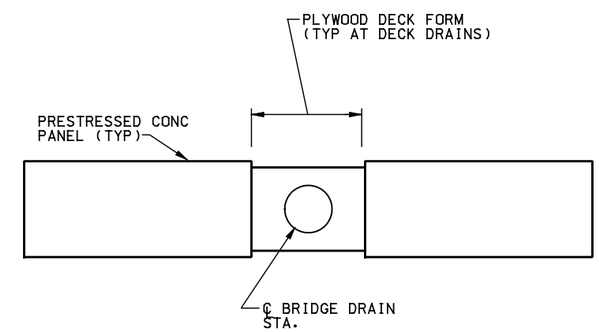

DETAIL 1

DESIGNED BY: MJJ	ISSUE RECORD		
	NO.	DESCRIPTION	DATE
DRAFTED BY: ADH	A	IN-PROCESS DESIGN SUBMITTAL	20DEC02
	B	FINAL DESIGN SUBMITTAL	04FEB03
	1	APPROVED FOR CONSTRUCTION	12MAR03
CHECKED BY: MJJ/JA	AB	AS-BUILT	26FEB07

METRO DENVER / COLORADO

Southeast Corridor Constructors
7200 South Alton Way
Englewood, CO 80112

JE Sverdrup
A Jacobs Company

SOUTHEAST CORRIDOR MULTI-MODAL PROJECT
AREA 1.1
WASHINGTON TO NB I-25 OVER NB I-25 TO LINCOLN RAMP
PRECAST PANEL DECK FORMS (1)

STRUCTURE NO F-17-NB | SECC BRIDGE NO 3

PROJECT NO./CODE NH 0252-299 11584
FILE NAME 11STDT0325
DRAWING NUMBER B224

AS-BUILT

File Name: C:\PWWORKING\DMS00941\11STDT0325.DGN
User: DALE.LARKEE
Time Plotted: 09:29:09 AM
Date Plotted: 03/22/2007
Pen Table: S:\MICROSTATION\PLOTTING\PENTABLES\T-REX-GRAY.TBL

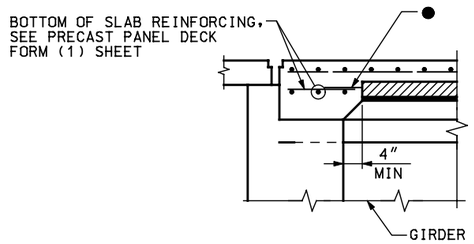

SECTION AT ABUTMENT

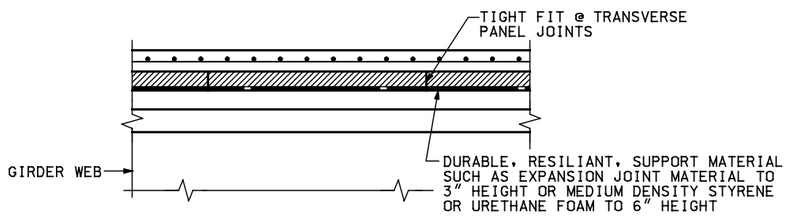

SECTION THRU TRANSVERSE PANEL JOINTS

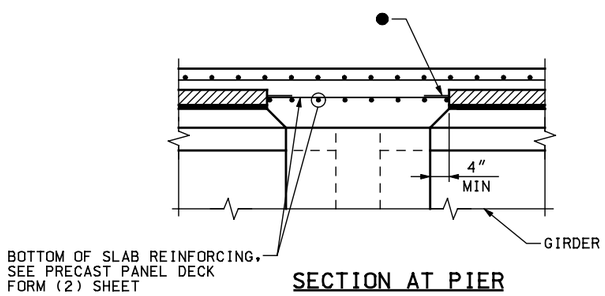

SECTION AT PIER

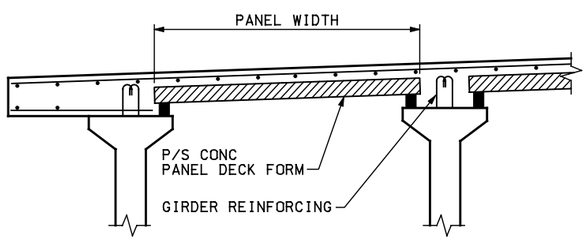

SECTION

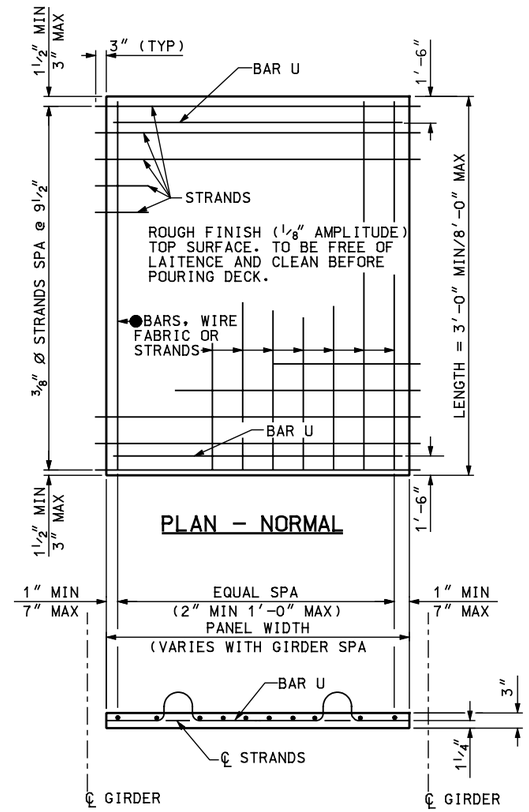

PRESTRESSED PANEL DETAILS

NOTES:

1. SAWING OF PANELS IS ACCEPTABLE IN AREAS WHERE PROJECTING REINFORCEMENT IS NOT REQUIRED. IT IS DESIRABLE TO HAVE THE PRESTRESSING STRANDS PROJECT FROM THE PANELS AS LONG AS THE PROJECTING STRANDS DO NOT INTERFERE WITH OTHER BRIDGE COMPONENTS.
2. ● REINFORCING PERPENDICULAR TO STRANDS MAY BE DEFORMED REINF. BARS, WELDED WIRE FABRIC, OR WELDED DEFORMED BAR MATS, AND SHALL BE PLACED DIRECTLY ABOVE THE STRANDS. MINIMUM AREA OF REINFORCING PERPENDICULAR TO STRANDS SHALL BE 0.11 SQ IN PER FT TENSIONED OR UNTENSIONED STRANDS MAY ALSO BE USED. THESE INDIVIDUAL BARS OR WIRES SHALL BE NO LARGER THAN 0.375″ DIAMETER. FOR LOCATION OF LONGITUDINAL BAR EXTENSIONS, SEE "PRECAST PANEL DECK FORM (1)" SHEET.
3. THE LONGITUDINAL REINFORCING STEEL IN THE CAST-IN-PLACE PORTION OF THE DECK MAY REST DIRECTLY ON THE PANELS AS NECESSARY TO OBTAIN CLEARANCES AT THE TOP OF DECK, UNLESS OTHERWISE NOTED.
4. THE TOLERANCE ON STRAND PLACEMENT SHALL NOT EXCEED ¼″. THE TOLERANCE ON PANEL THICKNESS SHALL NOT EXCEED ¼″.
5. CONCENTRATED CONSTRUCTION LOADS SHALL NOT EXCEED 500 LB UNLESS THE LOAD IS DISTRIBUTED TO LESS THAN 117 PSF. TOTAL LOADS APPLIED TO ANY PANEL DURING CONSTRUCTION SHALL NOT EXCEED 117 PSF.
6. BOTTOM FLEXURAL CRACKS, SAGS GREATER THAN .5″, OR CAMBERS GREATER THAN .5″ WILL BE CONSIDERED EVIDENCE OF MISHANDLING, OVERLOADING, OR EXCEEDING ALLOWABLE TOLERANCES, AND MAY BE CAUSE FOR REJECTING PANELS AT THE ENGINEER'S DISCRETION.

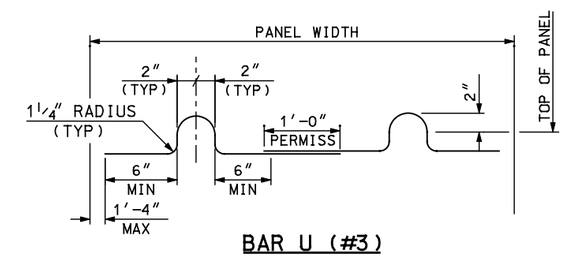

BAR U (#3)
PRESTRESSED PANEL DETAILS

DESIGNED BY: JA	ISSUE RECORD		
	NO.	DESCRIPTION	DATE
DRAFTED BY: ADH	A	IN PROCESS DESIGN SUBMITTAL	20DEC02
	B	FINAL DESIGN SUBMITTAL	04FEB03
	1	APPROVED FOR CONSTRUCTION	12MAR03
CHECKED BY: MJJ	AB	AS-BUILT	26FEB07

T-REX METRO DENVER / COLORADO

Southeast Corridor Constructors
7200 South Alton Way
Englewood, CO 80112

JE Sverdrup
A Jacobs Company

SOUTHEAST CORRIDOR MULTI-MODAL PROJECT
AREA 1.1
WASHINGTON TO NB I-25 OVER NB I-25 TO LINCOLN RAMP
PRECAST PANEL DECK FORM (2)

STRUCTURE NO F-17-NB | SECC BRIDGE NO 3

PROJECT NO./CODE NH 0252-299 11584
FILE NAME 11STDT0326
DRAWING NUMBER B225

AS-BUILT

Pen Table: S:\MICROSTATION\PLOTTING\PENTABLES\T-REX-GRAY.TBL
Date Plotted: 03/22/2007
Time Plotted: 09:29:13 AM
File Name: C:\PWWORKING\DMS00941\11STDT0326.DGN
User: DALE.LARKEE

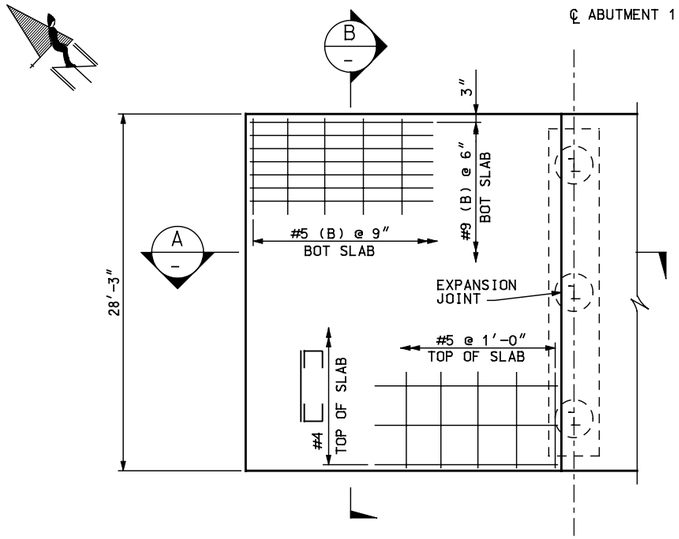

PLAN – ABUTMENT 1

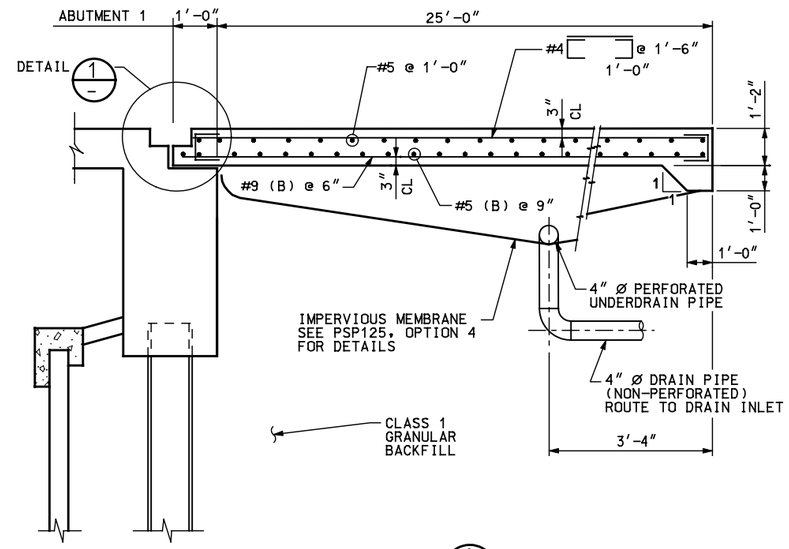

SECTION A

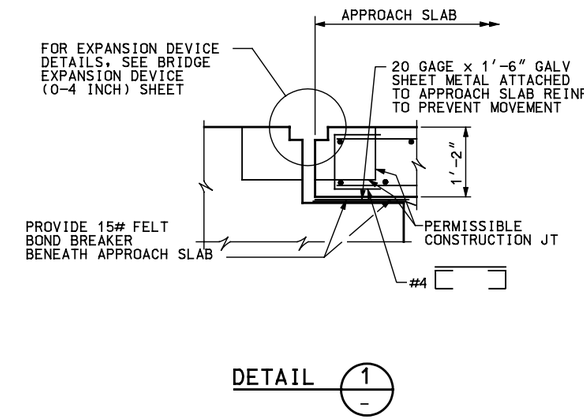

DETAIL 1

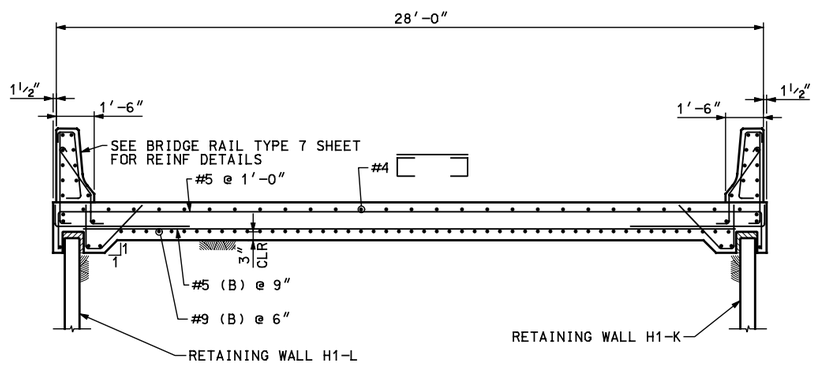

SECTION B

NOTE:

1. FOR ADDITIONAL DRAINAGE SYSTEM DETAILS BENEATH APPROACH SLAB, SEE CAISSON DETAILS, ABUTMENT 1 DETAILS, ABUTMENT 4 DETAILS.
2. CONCRETE CLASS D (BRIDGE) SHALL BE USED FOR APPROACH SLAB

DESIGNED BY: MJJ	ISSUE RECORD		
	NO.	DESCRIPTION	DATE
DRAFTED BY: ADH	A	IN PROCESS DESIGN SUBMITTAL	20DEC02
	B	FINAL DESIGN SUBMITTAL	04FEB03
	1	APPROVED FOR CONSTRUCTION	12MAR03
CHECKED BY: MJJ /JA	AB	AS-BUILT	26FEB07

TREX METRO DENVER / COLORADO

Southeast Corridor Constructors
7200 South Alton Way
Englewood, CO 80112

JE Sverdrup
A Jacobs Company

SOUTHEAST CORRIDOR MULTI-MODAL PROJECT
AREA 1.1
WASHINGTON TO NB I-25 OVER NB I-25 TO LINCOLN RAMP
ABUTMENT 1 APPROACH SLAB DETAILS

STRUCTURE NO F-17-NB | SECC BRIDGE NO 3

PROJECT NO./CODE NH 0252-299 11584
FILE NAME 11STDT0312
DRAWING NUMBER B226

AS-BUILT

File Name: C:\PWWORKING\DMS00941\11STDT0312.DGN
User: DALE.LARKEE
Time Plotted: 09:14:13 AM
Date Plotted: 03/22/2007
Pen Table: S:\MICROSTATION\PLOTTING\PENTABLES\T-REX-GRAY.TBL

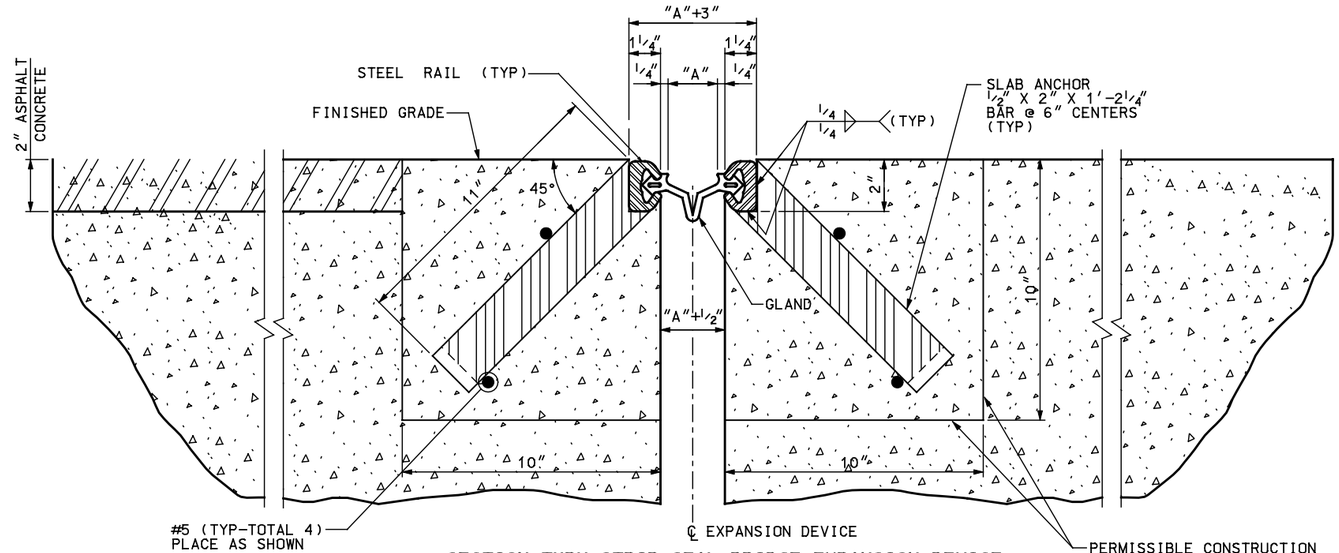

SECTION THRU STRIP SEAL BRIDGE EXPANSION DEVICE

SECTION TAKEN PERPENDICULAR TO ℄ EXPANSION DEVICE AT ABUTMENT 1 & PIER 3.
SLAB REINFORCING NOT SHOWN.

NOTES:

1. THE EXPANSION DEVICE SHALL BE INSTALLED ON GRADE, PARALLEL TO THE SLOPE AND GRADE OF THE DECK.
2. AFTER THE CONCRETE HAS ATTAINED INITIAL SET, THE ATTACHMENTS USED TO HOLD THE EXPANSION DEVICE ASSEMBLY IN IT'S PROPER POSITION SHALL BE REMOVED.
3. STEEL RAILS AND ANCHORS SHALL BE GALVANIZED AFTER FABRICATION IN ACCORDANCE WITH AASHTO M111.
4. THE NEOPRENE EXTRUSION SHALL BE ONE PIECE.

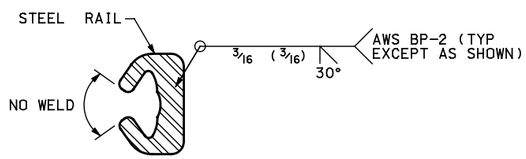

BUTT WELD DETAIL

ALL BUTT JOINTS IN STEEL RAIL (FIELD AND SHOP JOINTS) SHALL BE SINGLE V-GROOVE WELDS BP-2 WITH E-7016 OR E-7018 ELECTRODE. NO WELD IN INTERIOR OF RAIL WHERE IN CONTACT WITH RUBBER GLAND. GRIND WELD SMOOTH ON TOP SURFACE OF RAIL.

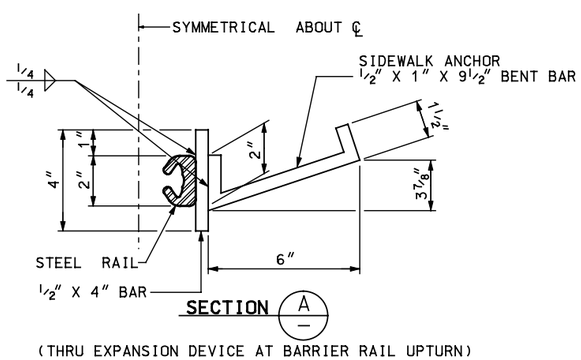

(THRU EXPANSION DEVICE AT BARRIER RAIL UPTURN)

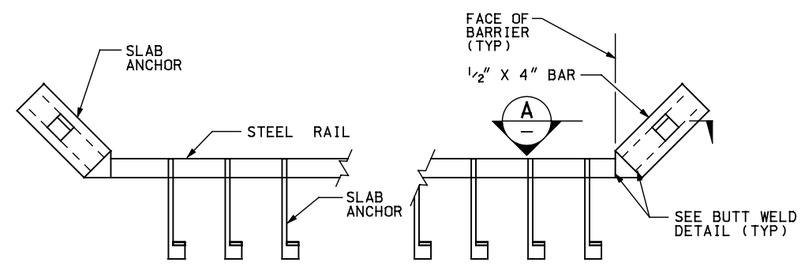

ELEVATION

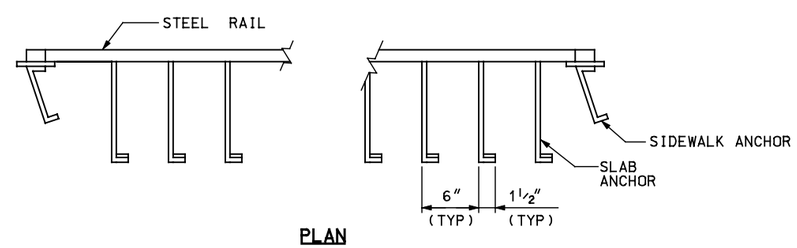

PLAN

STR TEMP	ABUT 1 OR 4 "A"
30° F	1 11/16"
40° F	1 5/8"
50° F	1 9/16"
60° F	1 1/2"
70° F	1 7/16"
80° F	1 3/8"
90° F	1 5/16"
100° F	1 1/4"

DESIGNED BY: MJJ	ISSUE RECORD		
	NO.	DESCRIPTION	DATE
DRAFTED BY: ADH	A	IN-PROCESS DESIGN SUBMITTAL	20DEC02
	B	FINAL DESIGN SUBMITTAL	04FEB03
	1	APPROVED FOR CONSTRUCTION	12MAR03
CHECKED BY: JHA/MJJ	AB	AS-BUILT	26FEB07

T-REX METRO DENVER / COLORADO

Southeast Corridor Constructors
7200 South Alton Way
Englewood, CO 80112

JE Sverdrup
A Jacobs Company

SOUTHEAST CORRIDOR MULTI-MODAL PROJECT
AREA 1.1
WASHINGTON TO NB I-25 OVER NB I-25 TO LINCOLN RAMP
BRIDGE EXPANSION DEVICE (0-4 INCH)

STRUCTURE NO F-17-NB | SECC BRIDGE NO 3

PROJECT NO./CODE NH 0252-299 11584
FILE NAME 11STDT0322
DRAWING NUMBER B230

AS-BUILT

File Name: C:\PWWORKING\DMS00941\11STDT0322.DGN
User: DALE.LARKEE
Pen Table: S:\MICROSTATION\PLOTTING\PENTABLES\T-REX-GRAY.TBL
Date Plotted: 03/22/2007
Time Plotted: 09:14:59 AM