MAR. 2011 211007

GENERAL NOTES

ALL WORK SHALL BE DONE IN ACCORDANCE WITH COLORADO DEPARTMENT OF TRANSPORTATION (CDOT) 2005 STANDARD SPECIFICATIONS FOR ROAD AND BRIDGE CONSTRUCTION APPLICABLE TO THE PROJECT.

EXCEPT AS SHOWN IN THE PLANS, STRUCTURE EXCAVATION AND BACKFILL SHALL BE IN ACCORDANCE WITH M-206-2.

EXPANSION JOINT MATERIAL SHALL MEET AASHTO SPECIFICATION M213.

LEVELING PADS ARE UNLAMINATED BEARINGS. THEY SHALL BE CUT OR MOLDED FROM AASHTO ELASTOMER GRADE 3, 4, OR 5 AS DESCRIBED IN TABLES 705-1 AND 705-2 WITH A DUROMETER (SHORE "A") HARDNESS OF 60.

GRADE 60 REINFORCING STEEL IS REQUIRED.

ALL REINFORCING STEEL SHALL BE EPOXY COATED UNLESS OTHERWISE NOTED.

(N) DENOTES NON COATED REINFORCING STEEL.

ALL THE PROVISIONS FOR BRIDGE DECK CONCRETE SHALL ALSO APPLY TO APPROACH SLAB CONCRETE.

STRUCTURAL STEEL FOR PILING SHALL BE AASHTO M270 (ASTM A709) GRADE 50.

THE FOLLOWING TABLE GIVES THE MINIMUM CLASS B LAP SPLICE LENGTH FOR EPOXY COATED REINFORCING BARS PLACED IN ACCORDANCE WITH SUBSECTION 602.06. THESE SPLICE LENGTHS SHALL BE INCREASED BY 25% FOR BARS SPACED AT LESS THAN 6" ON CENTER.

BAR SIZE	#4	#5	#6	#7	#8	#9	#10	#11
SPLICE LENGTH FOR CLASS D & H CONCRETE	1'-3"	1'-7"	2'-5"	2'-10"	3'-8"	4'-8"	5'-10"	7'-3"

WHEN THE CONTRACTOR ELECTS TO SUBSTITUTE EPOXY COATED REINFORCEMENT FOR BLACK REINFORCING BARS, THE MINIMUM LAP SPLICE SHALL BE AS DESCRIBED ABOVE.

THE FOLLOWING TABLE GIVES THE MINIMUM CLASS B LAP SPLICE LENGTH FOR BLACK REINFORCING BARS PLACED IN ACCORDANCE WITH SUBSECTION 602.06. THESE SPLICE LENGTHS SHALL BE INCREASED BY 25% FOR BARS SPACED AT LESS THAN 6" ON CENTER.

BAR SIZE	#4	#5	#6	#7	#8	#9	#10	#11
SPLICE LENGTH FOR CLASS D & H CONCRETE	1'-1"	1'-4"	1'-7"	1'-11"	2'-5"	3'-1"	3'-11"	4'-10"

THE ABOVE SPLICE LENGTHS SHALL BE INCREASED BY 20 PERCENT FOR 3 BAR BUNDLES AND 33 PERCENT FOR 4 BAR BUNDLES.

THE CONTRACTOR SHALL BE RESPONSIBLE FOR THE STABILITY OF THE STRUCTURE DURING CONSTRUCTION.

E.F. = EACH FACE
F.F. = FAR FACE
N.F. = NEAR FACE

PERMANENT STEEL DECK FRAMES ARE REQUIRED.

FOR STRUCTURE NUMBER INSTALLATION, SEE STANDARD S-614-12.

ALL CONCRETE IN CONTACT WITH SOIL SHALL MEET CLASS 0 SULFATE SEVERITY EXPOSURE REQUIREMENTS.

STATIONS, ELEVATIONS, AND DIMENSIONS CONTAINED IN THESE PLANS ARE CALCULATED FROM A RECENT FIELD SURVEY AND FROM AS-BUILT PLANS. THE CONTRACTOR SHALL VERIFY ALL DEPENDENT DIMENSIONS IN THE FIELD BEFORE ORDERING OR FABRICATING ANY MATERIAL.

THE INFORMATION SHOWN ON THESE PLANS CONCERNING THE TYPE AND LOCATION OF UNDERGROUND UTILITIES IS NOT GUARANTEED TO BE ACCURATE OR ALL INCLUSIVE. THE CONTRACTOR IS RESPONSIBLE FOR MAKING HIS OWN DETERMINATION AS TO THE TYPE AND LOCATION OF UNDERGROUND UTILITIES AS MAY BE NECESSARY TO AVOID DAMAGE THERETO. THE CONTRACTOR SHALL CONTACT THE UTILITY NOTIFICATION CENTER OF COLORADO AT 1-800-922-1987 AT LEAST 3 DAYS (NOT INCLUDING THE DAY OF NOTIFICATION) PRIOR TO ANY EXCAVATION OR OTHER EARTHWORK.

THE CONTRACTOR SHALL SUBMIT A WORK PLAN FOR REVIEW AND APPROVAL BY THE ENGINEER ON THE EQUIPMENT AND PROCEDURES TO BE USED TO REMOVE THE PORTION OF THE EXISTING STRUCTURE PRIOR TO THE COMMENCEMENT OF THE REMOVAL OPERATION. SEE PROJECT SPECIAL PROVISIONS ITEM 202 - REMOVAL OF PORTIONS OF PRESENT STRUCTURE FOR REMOVAL REQUIREMENTS.

DESIGN DATA

AASHTO, FOURTH EDITION LRFD WITH CURRENT INTERIMS

DESIGN METHOD: LOAD AND RESISTANCE FACTOR DESIGN

LIVE LOAD: HL-93 (DESIGN TRUCK OR TANDEM, AND DESIGN LANE LOAD)
DEAD LOAD: ASSUMES 36 LBS. PER SQ. FT. FOR FUTURE BRIDGE DECK OVERLAY
ASSUMES 5 LBS. PER SQ. FT. FOR STEEL DECK FORMS

REINFORCED CONCRETE:

CLASS D CONCRETE: f'c = 4,500 psi
CLASS H CONCRETE: f'c = 4,500 psi
CLASS BZ CONCRETE: f'c = 4,000 psi (CAISSON ONLY)
REINFORCING STEEL: fy = 60,000 psi

PRECAST PRESTRESSED CONCRETE:
CLASS PS CONCRETE: f'c = (SEE SHT. B18)
PRESTRESSED STRAND: f's = 270,000 psi

STEEL PILING: AASHTO M270 (ASTM A709)
GRADE 50, Fy = 50,000 psi

BRIDGE DESCRIPTION

4-SPAN (33'-9", 73'-0", 73'-0", 41'-9" BRIDGE.
CONCRETE SLAB AND PRESTRESSED BOX GIRDER CONTINUOUS, SPREAD.
I-225 OVER COLFAX AVENUE, EXISTING BRIDGE WIDENING.
WIDEN 9'-6" WEST SIDE, 137'-6" ROADWAY WIDTH CURB TO CURB.
BRIDGE RAIL TYPE 7 (SPECIAL) WEST SIDE, 90° 00'00" SKEW.

INDEX OF DRAWINGS

B1 GENERAL INFORMATION
B2 SUMMARY OF QUANTITIES
B3 GENERAL LAYOUT (1 OF 2)
B4 GENERAL LAYOUT (2 OF 2)
B5 TYPICAL WIDENING SECTION
B6 ENGINEERING GEOLOGY
B7 CONSTRUCTION LAYOUT (1 OF 2)
B8 CONSTRUCTION LAYOUT (2 OF 2)
B9 FOUNDATION LAYOUT
B10 FOUNDATION DETAILS
B11 ABUTMENT 1 PLAN & ELEVATION
B12 ABUTMENT 5 PLAN & ELEVATION
B13 ABUTMENT DETAILS
B14 ABUTMENT 1 WINGWALL DETAILS
B15 ABUTMENT 5 WINGWALL DETAILS
B16 PIER 2, 3 & 4 PLAN & ELEVATION
B17 PIER DETAILS
B18 PRESTRESSED CONCRETE BOX GIRDER
B19 SUPERSTRUCTURE SECTION
B20 DECK REINFORCING PLAN
B21 BRIDGE RAIL DETAILS
B22 BRIDGE RAIL TYPE 7 GUARDRAIL TRANSITION
B23 EXISTING BRIDGE RAIL MODIFICATIONS
B24 FENCE CHAIN LINK (SPECIAL) (36" INCH)
B25 APPROACH SLAB DETAILS
B26 APPROACH SLAB INLET DETAILS (1 OF 2)
B27 APPROACH SLAB INLET DETAILS (2 OF 2)
B28 EXPANSION DEVICE DETAILS (1 OF 2)
B29 EXPANSION DEVICE DETAILS (2 OF 2)
B30 BRIDGE RAIL COVER PLATE DETAILS
B31 MEDIAN GUARDRAIL COVER PLATE DETAILS
B32 PIER 2 & 4 GUARDRAIL DETAILS
B33 PIER 3 GUARDRAIL DETAILS
B34 SLOPE PAVING DETAILS
B35 MECHANICALLY STABILIZED EARTH BACKFILL
B36 EXCAVATION & BACKFILL DETAILS
B37 BRIDGE DECK ELEVATIONS (1 OF 2)
B38 BRIDGE DECK ELEVATIONS (1 OF 2)

811 FOR BURIED UTILITY INFORMATION
THREE (3) BUSINESS DAYS BEFORE YOU DIG
CALL 811
(or 1-800-922-1987)
UTILITY NOTIFICATION CENTER OF COLORADO (UNCC)
www.uncc.org

BXX / XX
CROSS REFERENCE DRAWING NUMBER (IF BLANK, REFERENCE IS TO SAME SHEET)
SECTION OR DETAIL IDENTIFICATION

Revision Dates	(Preliminary Stage Only)

Quantities			Detail			Design		
	INITIAL	DATE		INITIAL	DATE		INITIAL	DATE
Quantities By			Detailed By	RAD	12/08	Designed By		
Checked By			Checked By			Checked By		

0000

Sheet Revisions		
Date:	Comments	Init.

FELSBURG HOLT & ULLEVIG
6300 South Syracuse Way Suite 600 Centennial, CO 80111
303.721.1440 fax 303.721.0832 fhu@fhueng.com

AURORA

Colorado Department of Transportation
CDOT DEPARTMENT OF TRANSPORTATION
2000 S. Holly Street
Denver, Co 80222
Phone: 303-757-9350 FAX: 303-757-9004
Region 6 RJE

As Constructed	I-225/COLFAX - PHASE 3 I-225 OVER COLFAX AVENUE GENERAL INFORMATION			Project No./Code
No Revisions:				STU 2254-082
Revised:	Designer: KMA	Structure Numbers	F-17-JK	17718
Void:	Detailer: KJS			
	Sheet Subset: BRIDGE	Subset Sheets: B1 of 38		Sheet Number 42

seeliner 9:13:16 AM L:\09004\14493\Phase 3\Bridge\Drawings\14493BRDG_PH3_F-17-JK_Colfax_GenInfo.dgn
3/15/2011 CDOT-PDFDraftQuality_XM.pltcfg

REV. MAR. 2011 211007

Revision Dates (Preliminary Stage Only)

MM/YY			

Quantities			
	INITIAL	DATE	
Quantities By	XXX	MM/YY	
Checked By	XXX	MM/YY	

Detail			
	INITIAL	DATE	
Detailed By	KJS	06/09	
Checked By	CAD	08/09	

Design			
	INITIAL	DATE	
Designed By	XXX	MM/YY	
Checked By	XXX	MM/YY	

Ricdi 2:27:41 PM L:\09004\14493\Phase_3\Bridge\Drawings\14493BRDG_PH3_F-17-JK_Colfax_SA001.dgn
4/27/2011 CDOT-PDFDraftQuality_XM.pltcfg CDOT-PenTable.tbl

SUMMARY OF QUANTITIES

	ITEM NO.	DESCRIPTION	UNIT	SUPERSTRUCTURE	ABUTMENT 1	PIER 2	PIER 3	PIER 4	ABUTMENT 5	APPROACH SLABS	TOTALS
	202	REMOVAL OF PORTIONS OF PRESENT STRUCTURE	LS	1							1
	206	STRUCTURE EXCAVATION	CY		58	107	92	97	59		413
	206	STRUCTURE BACKFILL (SPECIAL)	CY		36				36		72
	206	STRUCTURE BACKFILL (FLOW-FILL)	CY			41		65			106
	206	STRUCTURE BACKFILL (CLASS 2)	CY		13	43	129 (3)	41	12		238
	502	PILE TIP	EA		3				3		6
(1)	502	STEEL PILING (HP 12x53)	LF		167				171		338
	503	DRILLED CAISSON (42 INCH)	LF			41.5	41.5	41.5			125
	507	CONCRETE SLOPE AND DITCH PAVING	CY			9	5 (4)	14			28
	507	CONCRETE SLOPE AND DITCH PAVING (REINFORCED)	CY		14				15		29
	515	CONCRETE SEALER	SY	294						36	330
	518	BRIDGE EXPANSION DEVICE (0-4 INCH)	LF							278	278
R-1 (5)	518	ELASTOMERIC CONCRETE END DAM	CF							139	139
	601	CONCRETE CLASS D (BRIDGE)	CY		8	110	6	111	9		245
	601	CONCRETE CLASS H	CY	99	4				4	18	125
	601	BRIDGE DECK FINISH (SAWED GROOVES)	SY	236						30	266
	601	STRUCTURAL CONCRETE STAIN	SY	445	8	21	21	22	8	24	549
	602	REINFORCING STEEL	LB	640	1,015				990		2,645
	602	REINFORCING STEEL (EPOXY COATED)	LB	24,462	200	7,556	2,722	7,614	355	2,645	45,554
	603	18" INCH PLASTIC PIPE	LF							65	65
R-1	606	GUARDRAIL (SPECIAL)	LF				180				180
	606	BRIDGE RAIL TYPE 7 (SPECIAL)	LF	258							258
	607	FENCE CHAIN LINK (SPECIAL) (36 INCH)	LF	256							256
	613	3/4 INCH ELECTRICAL CONDUIT	LF	43							43
	613	2 INCH ELECTRICAL CONDUIT	LF	460						72	532
(2)	613	LUMINAIRE HIGH PRESSURE SODIUM (WALL TYPE) (150 WATT)	EA	4							4
	618	PRESTRESSED CONCRETE BOX (DEPTH 32" THROUGH 48")	SF	1,128							1,128

Notes:

(1) Quantity includes (3) additional feet for each pile to account for (1) field splice per pile.

(2) For information only, see Lighting Plans for Fixture Details & Wiring.

(3) Backfill between the Guardrails on each side of Pier Columns.

(4) Located between the Guardrails on each side of Pier Columns.

R-1 (5) Quantity of Elostomeric Concrete includes an allowance of 35 CF for possible overrun due to deteriorated concrete at existing joint.

Sheet Revisions

	Date:	Comments	Init.
R-1	05-02-11	Added Note 5 & Revised	
		Guardrail (Special) quantity	GWB

FELSBURG HOLT & ULLEVIG
6300 South Syracuse Way Suite 600 Centennial, CO 80111
303.721.1440 fax 303.721.0832 fhu@fhueng.com

AURORA

Colorado Department of Transportation
DOT DEPARTMENT OF TRANSPORTATION
2000 S. Holly Street
Denver, Co 80222
Phone: 303-757-9350 FAX: 303-757-9004
Region 6 RJE

As Constructed
No Revisions:
Revised:
Void:

I-225/COLFAX - PHASE 3
I-225 OVER COLFAX AVENUE
SUMMARY OF QUANTITIES

Designer:	KMA	Structure Numbers	F-17-JK
Detailer:	KPS		
Sheet Subset:	BRIDGE	Subset Sheets:	B2 of 38

Project No./Code
STU 2254-082
17718
Sheet Number 43

MAR. 2011 211007

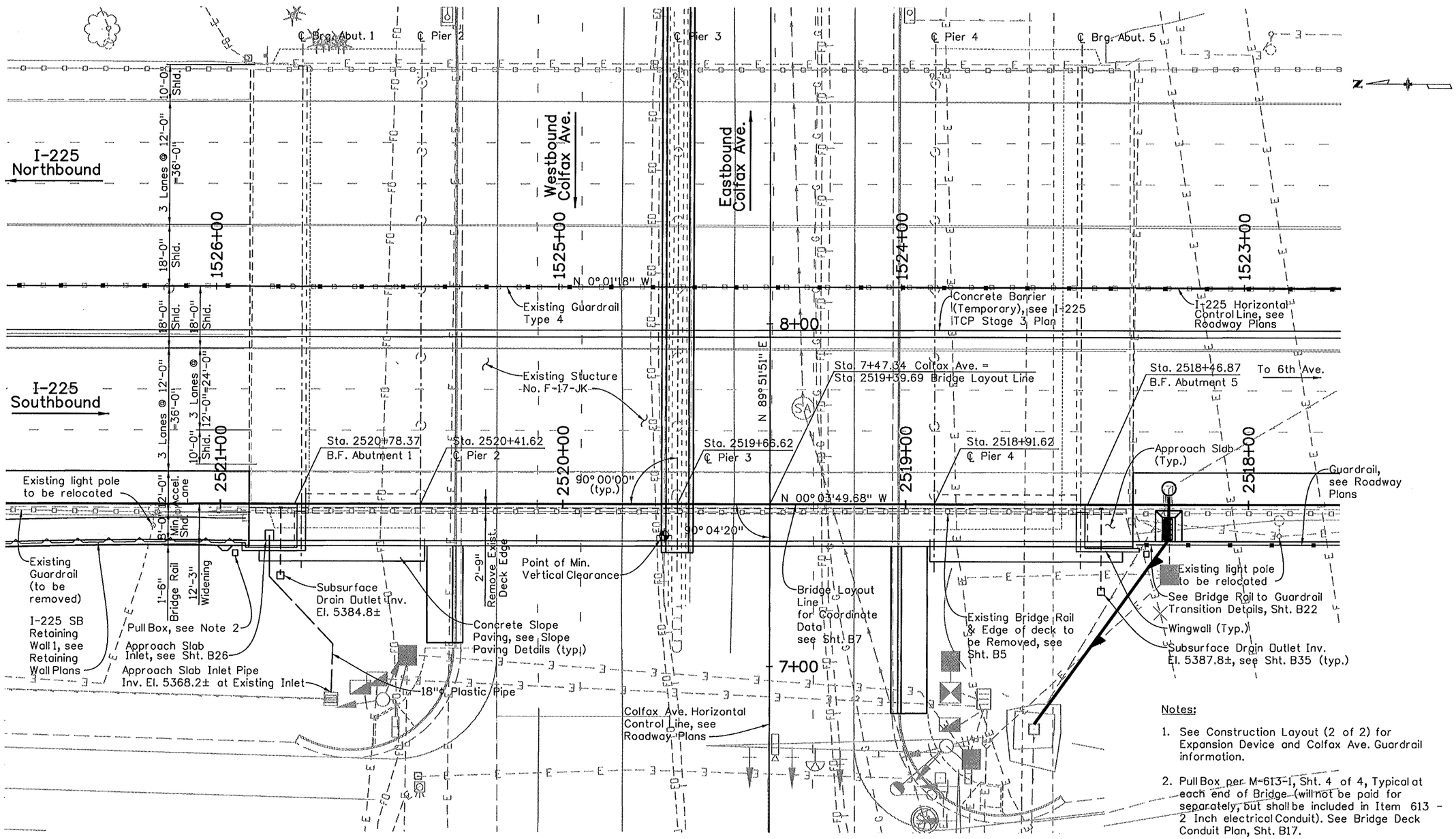

PLAN

Notes:

1. See Construction Layout (2 of 2) for Expansion Device and Colfax Ave. Guardrail information.
2. Pull Box per M-613-1, Sht. 4 of 4, Typical at each end of Bridge (will not be paid for separately, but shall be included in Item 613 - 2 Inch electrical Conduit). See Bridge Deck Conduit Plan, Sht. B17.
3. SB Slip Ramp Horizontal Control Line not shown, see Sht B7.

Sheet Revisions		
Date:	Comments	Init.

FELSBURG HOLT & ULLEVIG
6300 South Syracuse Way, Suite 600, Centennial, CO 80111
303.721.1440 fax 303.721.0832 fhu@fhueng.com

AURORA

Colorado Department of Transportation
DOT
2000 S. Holly Street
Denver, Co 80222
Phone: 303-757-9350 FAX: 303-757-9004
Region 6 RJE

As Constructed
No Revisions:
Revised:
Void:

I-225/COLFAX - PHASE 3
I-225 OVER COLFAX AVENUE
GENERAL LAYOUT (1 OF 2)

Designer:	KMA	Structure Numbers	F-17-JK
Detailer:	RAD		
Sheet Subset:	BRIDGE	Subset Sheets:	B3 of 38

Project No./Code
STU 2254-082
17718
Sheet Number 44

Design				Detail				Quantities			
	INITIAL	DATE			INITIAL	DATE			INITIAL	DATE	
Designed By	KMA	11/09		Detailed By	RAD	11/09		Quantities By			
Checked By				Checked By				Checked By			

Revision Dates (Preliminary Stage Only)

soeliner 9:13:29 AM L:\09004\14493\Phase 3\Bridge\Drawings\14493BRDG_PH3_F-17-JK_Colfax_GPE01.dgn
3/15/2011 CDOT-PDFDraftQuality_XM.pltcfg

MAR. 2011 211007

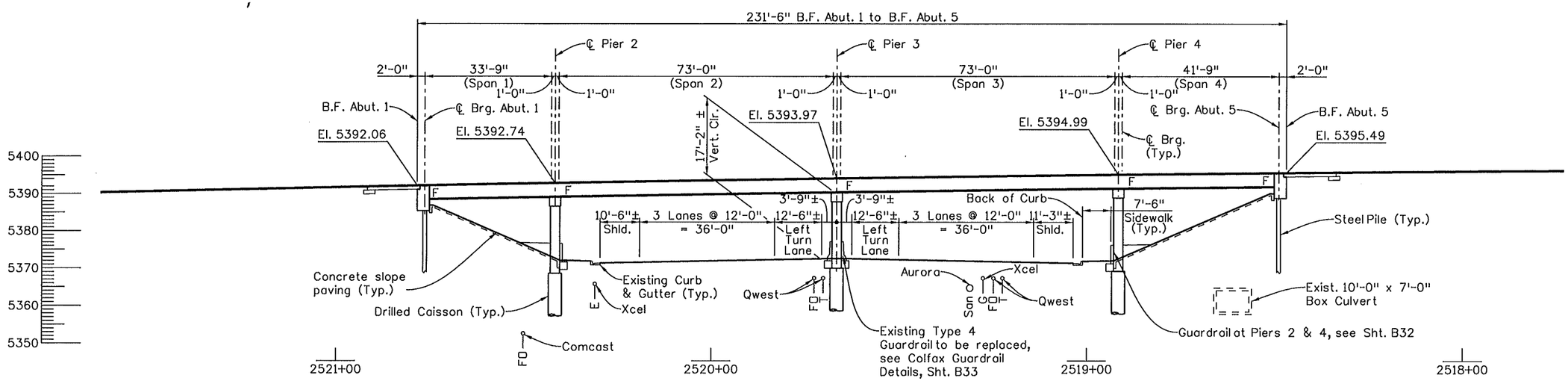

LONGITUDINAL SECTION

Taken at Bridge Layout Line
(Looking East)

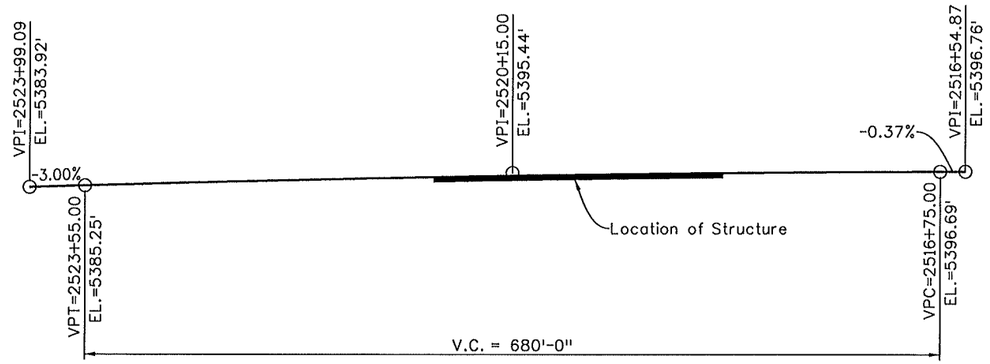

PROFILE NOTES:

This profile was established based on recent field survey data along the existing edge of shoulder & face of Bridge Rail of Southbound I-225. These survey elevations have been used to develop the "best fit" vertical profile.

The accuracy of this information is not guaranteed. It is the contractor's responsibility to verify all dimensions and elevations in the field prior to ordering or fabricating any material, and before setting the final screed elevations for the bridge deck. The engineer shall be notified in writing of any discrepancies between the plans and actual field conditions.

PROFILE GRADE AT BRIDGE LAYOUT LINE (SAWCUT LINE)

Design			Detail			Quantities		
	INITIAL	DATE		INITIAL	DATE		INITIAL	DATE
Designed By	KMA	11/09	Detailed By	RAD	12/09	Quantities By		
Checked By			Checked By			Checked By		

Revision Dates (Preliminary Stage Only)

CDOT-PDFDraftQuality_XM.pltcfg * 3/15/2011 soellner 9:13:33 AM L:\09004\14493\Phase 3\Bridge\Drawings\14493BRDG_PH3_F-17-JK_Colfax_GPE02.dgn

Sheet Revisions		
Date:	Comments	Init.

0000

FELSBURG HOLT & ULLEVIG
6300 South Syracuse Way Suite 600 Centennial, CO 80111
303.721.1440 fax 303.721.0832 fhu@fhueng.com

AURORA

Colorado Department of Transportation
CDOT DEPARTMENT OF TRANSPORTATION
2000 S. Holly Street
Denver, Co 80222
Phone: 303-757-9350 FAX: 303-757-9004
Region 6 RJE

As Constructed	I-225/COLFAX - PHASE 3 I-225 OVER COLFAX AVENUE GENERAL LAYOUT (2 OF 2)			Project No./Code
No Revisions:				STU 2254-082
Revised:	Designer: KMA	Structure Numbers	F-17-JK	17718
Void:	Detailer: KPS			
	Sheet Subset: BRIDGE	Subset Sheets: B4 of 38		Sheet Number 45

MAR. 2011 211007

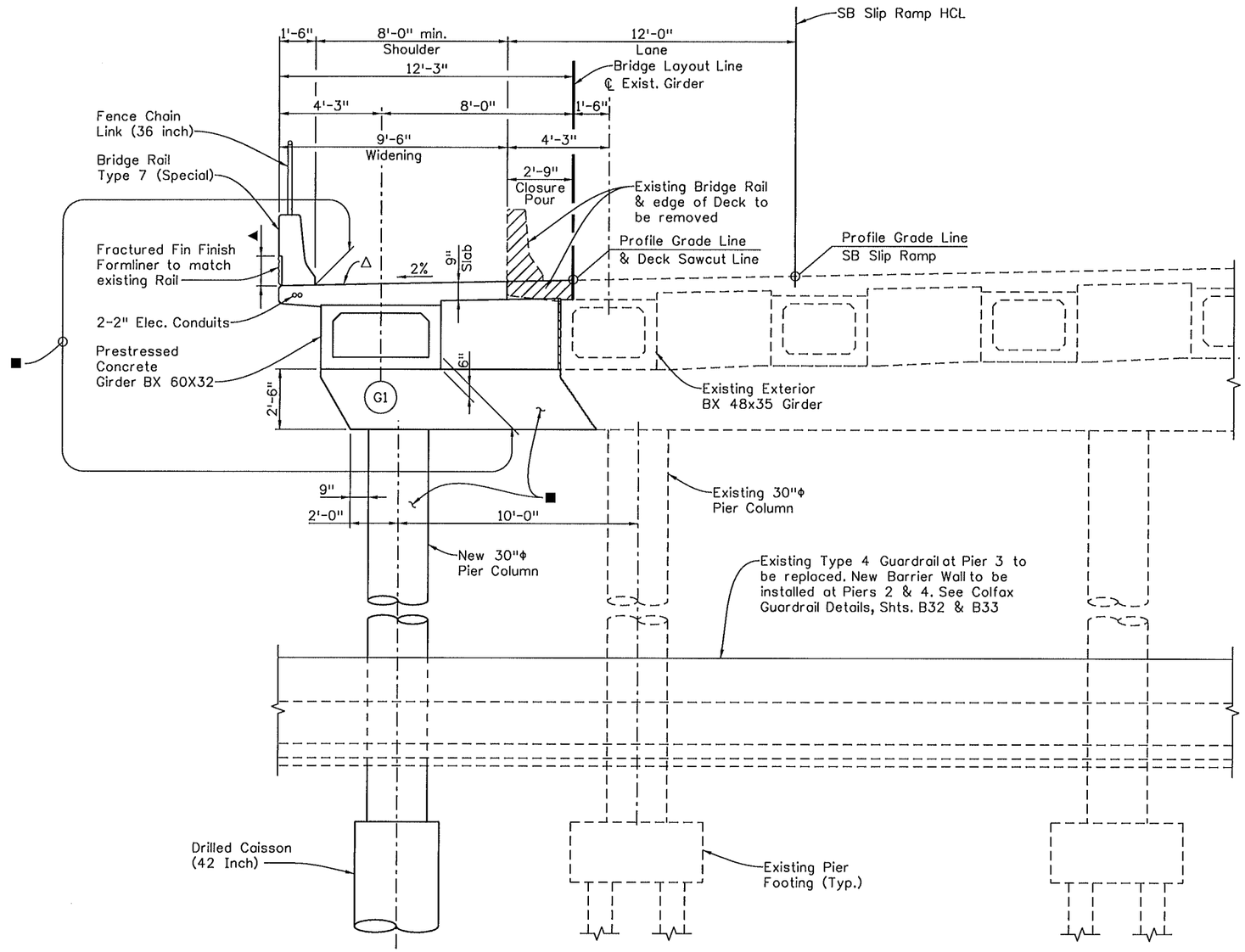

▲ Formliner with Structural Concrete Stain, Dark Gray. (Match existing color on east Bridge Rail).

■ Structural Concrete Stain, Light Gray, equivalent to Federal Color No. 26440

△ Concrete Sealer, see Note 4, Sht. B19

TYPICAL WIDENING SECTION

(Shown at Pier 3)

Design			Detail			Quantities		
	INITIAL	DATE		INITIAL	DATE		INITIAL	DATE
Designed By	KMA	11/09	Detailed By	RAD	11/09	Quantities By		
Checked By			Checked By			Checked By		

Revision Dates (Preliminary Stage Only)

soeliner 9:13:36 AM L:\09004\14493\Phase 3\Bridge\Drawings\14493BRDG_PH3_F-17-JK_Colfax_TypSection.dgn
3/15/2011 CDOT-PDFDraftQuality-XM.pltcfg *

Sheet Revisions		
Date:	Comments	Init.

FELSBURG HOLT & ULLEVIG
6300 South Syracuse Way Suite 600 Centennial, CO 80111
303.721.1440 fax 303.721.0832 fhu@fhueng.com

AURORA

Colorado Department of Transportation
DOT
2000 S. Holly Street
Denver, Co 80222
Phone: 303-757-9350 FAX: 303-757-9004
Region 6 RJE

As Constructed				
No Revisions:	I-225/COLFAX - PHASE 3 I-225 OVER COLFAX AVENUE TYPICAL WIDENING SECTION			Project No./Code
Revised:	Designer: KMA	Structure Numbers	F-17-JK	STU 2254-082
	Detailer: RAD			17718
Void:	Sheet Subset: BRIDGE	Subset Sheets: B5 of 38		Sheet Number 46

MAR. 2011 211007

Revision Dates (Preliminary Stage Only)					

Quantities			
	INITIAL	DATE	
Quantities By			
Checked By			

Detail			
	INITIAL	DATE	
Detailed By	RAD	12/08	
Checked By			

Design			
	INITIAL	DATE	
Designed By			
Checked By			

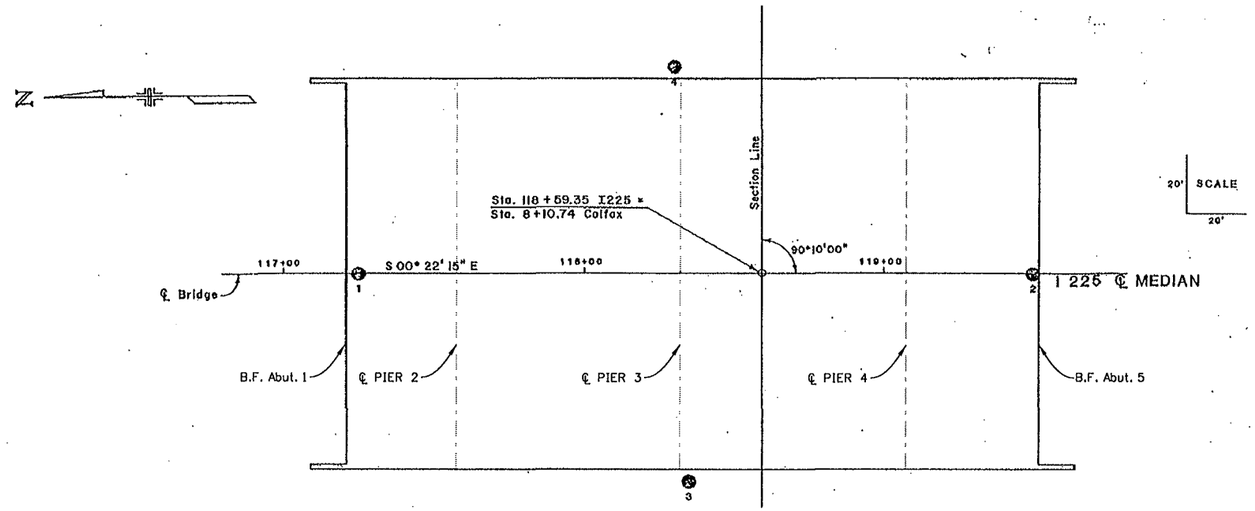

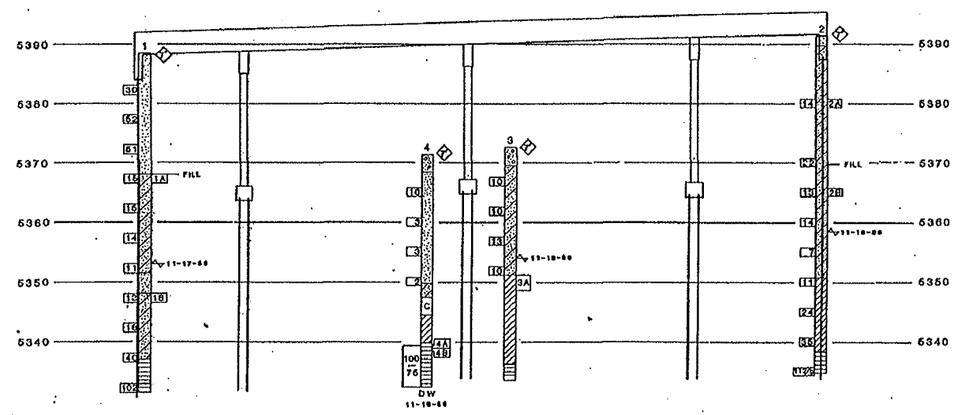

Notes:

1. The information on this sheet is from the As-Built Drawings dated 10-25-88, CDOT Project No. IR 225-4(36) for Str. No. F-17-JK.
2. For additional information refer to Geotechnical Engineering Review and Recommendations Memorandum dated March 3, 2009 by Yeh and Associates, Inc. for the I-225 Bridge Widening Over East Colfax Ave. & Colorado Department of Highways (CDOH) Staff Material Memorandum dated January 27, 1987.
3. Boulders or construction debris may be encountered at any depth at any location.
4. Proposed Piling & Caisson tip elevations not shown. See Shts. B50 & B51 for details.

SUMMARY OF TEST RESULTS

Sample No.	Depth	Classification: Corps. of Engrs. or Visual	Classification: AASHTO	Grading Analysis Percent: Gravel	Coarse Sand	Fine Sand	Silt and Clay	Atterberg Limits: Liquid Limit L_w	Plastic Limit P_w	Plastic Index I_p	Water Cont. W %	Wet Unit Weight γ P.C.F.	Unconfined Strength Q_u T.S.F.	Triaxial Shear Strength: φ	C P.S.I.	Dia. of Sample Backwall
1A	20.5-22.0	SANDY CLAY	A-7-6(26)	1	9	13	77	54	20	34	40.4					
	9.5-42.0	SANDY CLAY	A-7-6(57)	0	1	20	79	93	25	68	36.7					
	10.5-12.0	SANDY CLAY	A-7-6(15)	1	11	18	70	42	18	24	25.8					
2B	26.5-27.0	SANDY CLAY	A-6(16)	1	4	16	79	39	18	21	15.8					
3A	21.5-24.0	CLAY									32.8					2,660
4A	32.0-32.4	SHALE									25.5					2,050
4B	32.4-33.0	SHALE									24.9					

TYPE OF MATERIAL

- CLAY
- SAND
- SANDY CLAY
- SILTY SAND
- SANDY GRAVEL
- CONCRETE
- SHALE

LEGEND

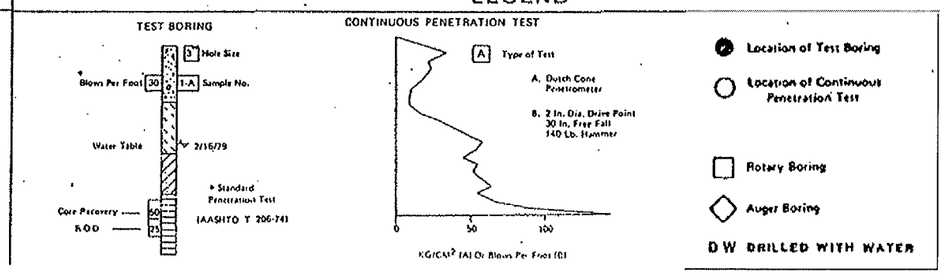

Sheet Revisions		
Date:	Comments	Init.

FELSBURG HOLT & ULLEVIG
6300 South Syracuse Way
Suite 600
Centennial, CO 80111
303.721.1440
fax 303.721.0832
fhu@fhueng.com

AURORA

Colorado Department of Transportation
CDOT
DEPARTMENT OF TRANSPORTATION
2000 S. Holly Street
Denver, Co 80222
Phone: 303-757-9350 FAX: 303-757-9004
Region 6 RJE

As Constructed	
No Revisions:	
Revised:	
Void:	

I-225/COLFAX - PHASE 3
I-225 OVER COLFAX AVENUE
ENGINEERING GEOLOGY

Designer:		Structure Numbers	F-17-JK
Detailer:	RAD		
Sheet Subset:	BRIDGE	Subset Sheets:	B6 of 38

Project No./Code
STU 2254-082
17718
Sheet Number 47

soeliner 9:13:39 AM L:\09004\14493\Phase 3\Bridge\Drawings\14493BRDG_PH3_F-17-JK_Colfax_Geology01.dgn
3/15/2011 CDOT-PDFDraftQuality_XM.pltcfg

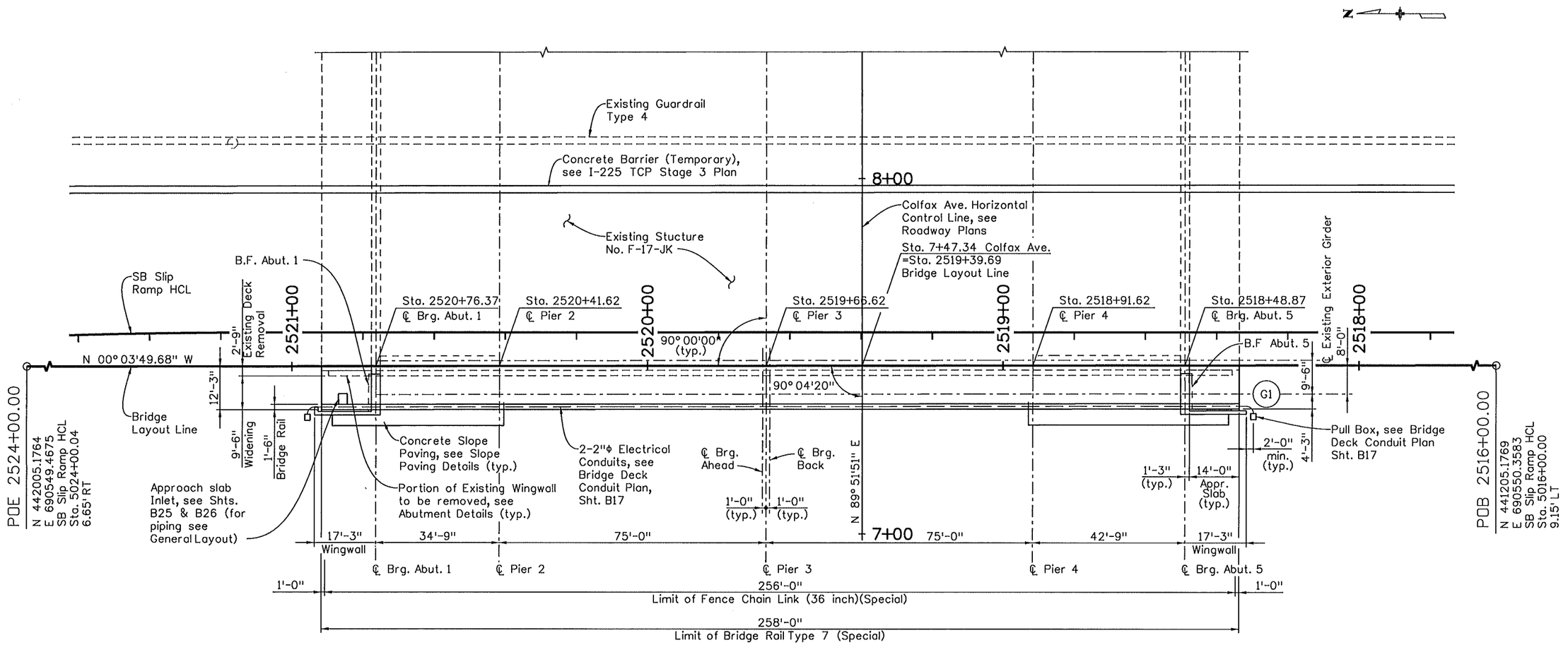

CONSTRUCTION LAYOUT

BRIDGE LAYOUT LINE COORDINATE DATA				
POINT	STATION	BEARING	NORTHING	EASTING
POB	2516+00.00	N 0°03'49.68" W	441205.1769	690550.3583
POE	2524+00.00		442005.1764	690549.4675

Sheet Revisions		
Date:	Comments	Init.

0000

FELSBURG HOLT & ULLEVIG
6300 South Syracuse Way Suite 600 Centennial, CO 80111
303.721.1440 fax 303.721.0832 fhu@fhueng.com

AURORA

Colorado Department of Transportation
DOT DEPARTMENT OF TRANSPORTATION
2000 S. Holly Street
Denver, Co 80222
Phone: 303-757-9350 FAX: 303-757-9004
Region 6 RJE

As Constructed
No Revisions:
Revised:
Void:

I-225/COLFAX - PHASE 3
I-225 OVER COLFAX AVENUE
CONSTRUCTION LAYOUT (1 OF 2)

Designer:	KMA	Structure Numbers	F-17-JK
Detailer:	KPS		
Sheet Subset:	BRIDGE	Subset Sheets:	B7 of 38

Project No./Code
STU 2254-082
17718
Sheet Number 48

Design			Detail			Quantities		
	INITIAL	DATE		INITIAL	DATE		INITIAL	DATE
Designed By	KMA	11/09	Detailed By	RAD	11/09	Quantities By		
Checked By			Checked By			Checked By		

Revision Dates (Preliminary Stage Only)

MAR. 2011 211007

48

soellner 9:13:44 AM L:\09004\14493\Phase 3\Bridge\Drawings\144938RDG_PH3_F-17-JK_Colfax_ConstLayout.dgn
3/15/2011 CDOT-PDFDraftQuality_XM.pltcfg *

REV. MAR. 2011 211007

Revision Dates (Preliminary Stage Only)

Quantities			
	INITIAL	DATE	
Quantities By			
Checked By			

Detail			
	INITIAL	DATE	
Detailed By	RAD	11/09	
Checked By			

Design			
	INITIAL	DATE	
Designed By	KMA	11/09	
Checked By			

Ricdl 2:30:21 PM L:\09004\14493\Phase 3\Bridge\Drawings\14493BRDG_PH3_F-17-JK_Colfax_ConstLayout02.dgn
4/27/2011 CDOT-PDFDraftQuality_XM.pltcfg CDOT-PenTable.tbl

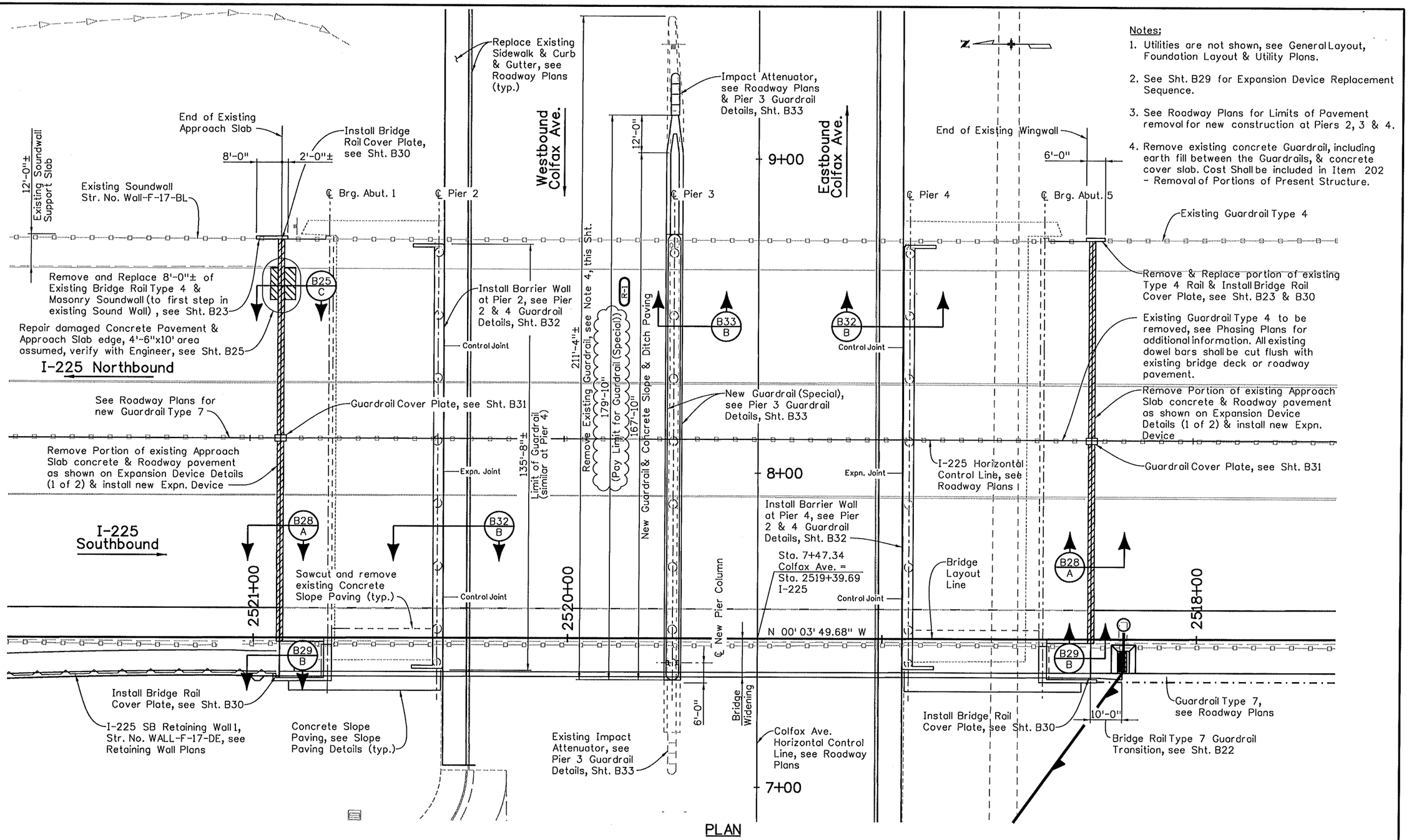

PLAN

Notes:

1. Utilities are not shown, see General Layout, Foundation Layout & Utility Plans.
2. See Sht. B29 for Expansion Device Replacement Sequence.
3. See Roadway Plans for Limits of Pavement removal for new construction at Piers 2, 3 & 4.
4. Remove existing concrete Guardrail, including earth fill between the Guardrails, & concrete cover slab. Cost Shall be included in Item 202 - Removal of Portions of Present Structure.

Sheet Revisions		
Date:	Comments	Init.
05-02-11	Revised Pay Item	PRS

R-1

FELSBURG HOLT & ULLEVIG
6300 South Syracuse Way Suite 600 Centennial, CO 80111
303.721.1440 fax 303.721.0832 fhu@fhueng.com

AURORA

Colorado Department of Transportation
CDOT DEPARTMENT OF TRANSPORTATION
2000 S. Holly Street
Denver, Co 80222
Phone: 303-757-9350 FAX: 303-757-9004
Region 6 RJE

As Constructed
No Revisions:
Revised:
Void:

I-225/COLFAX - PHASE 3
I-225 OVER COLFAX AVENUE
CONSTRUCTION LAYOUT (2 OF 2)

Designer:	KMA/GWB	Structure Numbers	F-17-JK
Detailer:	RAD		
Sheet Subset:	BRIDGE	Subset Sheets:	B8 of 38

Project No./Code
STU 2254-082
17718
Sheet Number 49

MAR. 2011 211007

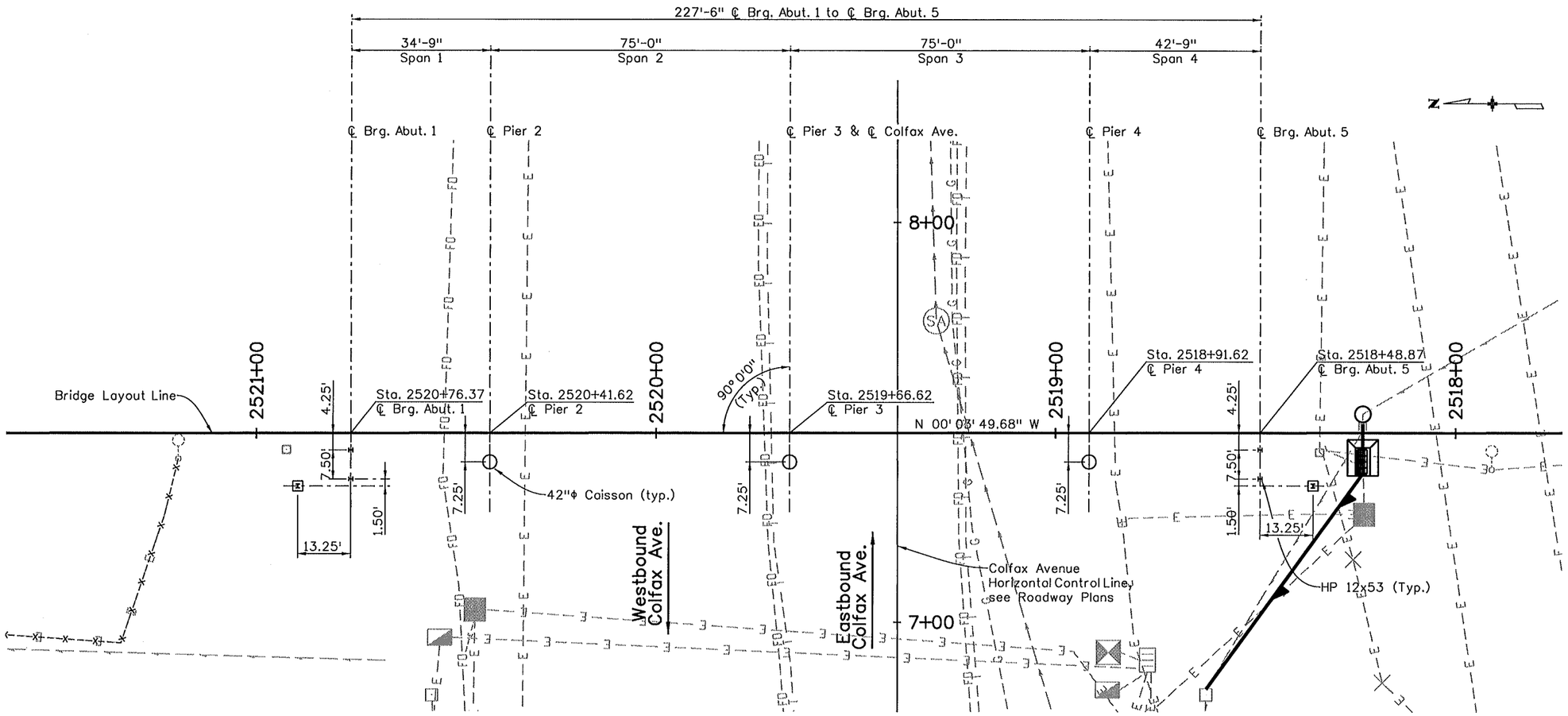

PLAN

Notes:

1. For additional information, See Foundation Details.
2. Boulders or construction debris may be encountered during foundation construction.
3. The Contractor shall pothole to locate and protect all existing utilities prior to drilling caissons or driving piles. The cost of the potholing shall be included in the work. See Utility Plans for additional information.
4. If a conflict is found with the foundation layout and existing utilities, the Engineer shall be notified immediately. If necessary, the caissons or H-Piles may be adjusted by the Engineer to minimize or eliminate the conflict(s). See Utility Plans for approximate location of know utilities. The Contractor is responsible for determining the exact location of utilities and protection against damage to them during construction activities, including caisson drilling operation.

Revision Dates (Preliminary Stage Only)			

Design			Detail			Quantities		
	INITIAL	DATE		INITIAL	DATE		INITIAL	DATE
Designed By	KMA	11/09	Detailed By	RAD	11/09	Quantities By		
Checked By			Checked By			Checked By		

Sheet Revisions		
Date:	Comments	Init.

FELSBURG HOLT & ULLEVIG
6300 South Syracuse Way Suite 600 Centennial, CO 80111
303.721.1440 fax 303.721.0832 fhu@fhueng.com

AURORA

Colorado Department of Transportation
CDOT DEPARTMENT OF TRANSPORTATION
2000 S. Holly Street
Denver, Co 80222
Phone: 303-757-9350 FAX: 303-757-9004
Region 6 RJE

As Constructed	I-225/COLFAX - PHASE 3 I-225 OVER COLFAX AVENUE FOUNDATION LAYOUT			Project No./Code
No Revisions:				STU 2254-082
Revised:	Designer: KMA	Structure Numbers	F-17-JK	17718
Void:	Detailer: KPS			
	Sheet Subset: BRIDGE	Subset Sheets: B9 of 38		Sheet Number 50

soelliner 9:13:57 AM L:\09004\14493\Phase 3\Bridge\Drawings\14493BRDG_PH3_F-17-JK_Colfax_FoundationLayout.dgn
3/15/2011 CDOT-PDFDraftQuality_XM.pltcfg

MAR. 2011 211007

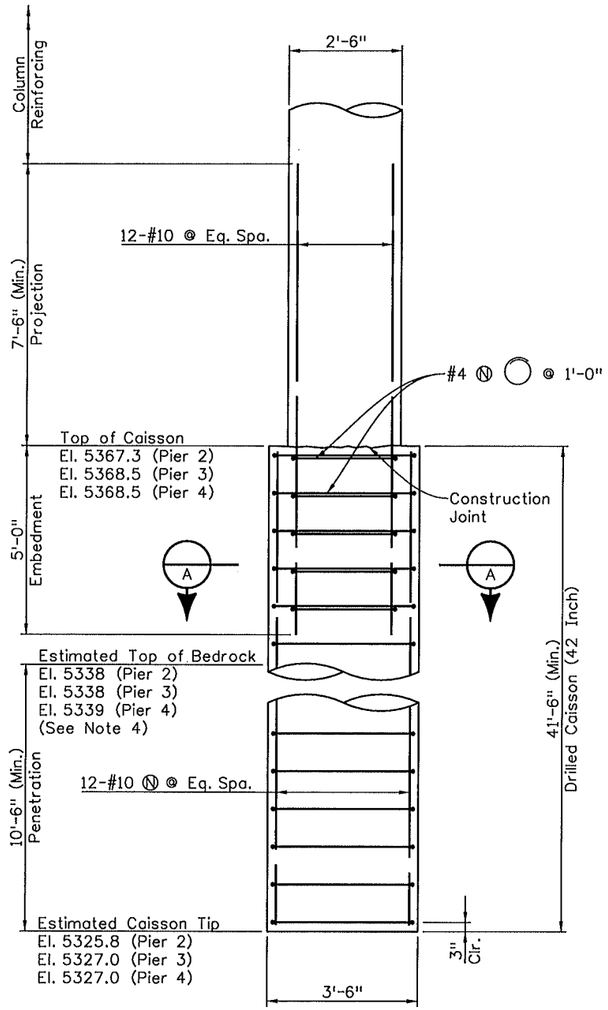

CAISSON DETAIL

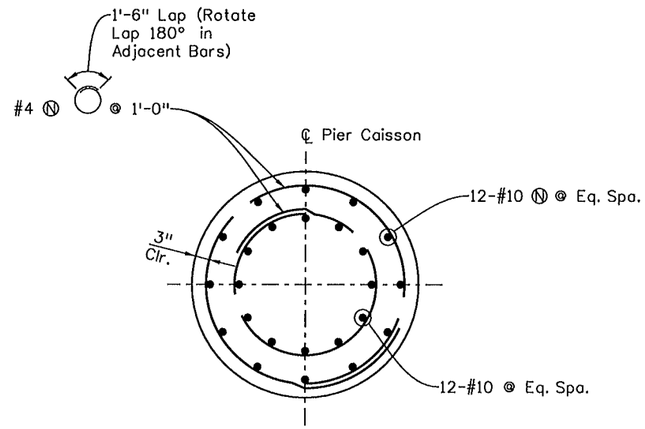

SECTION A

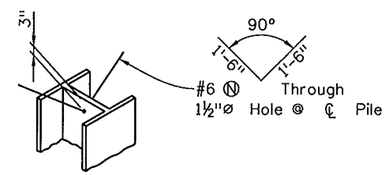

PILE ANCHORAGE DETAIL

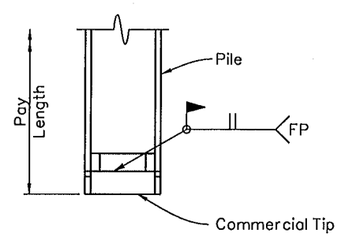

PILE REINFORCING TIP DETAIL

Use commercial tip; APF Hard Bite 77600 or approved equal

PILE & CAISSON DATA		
	42" ø CAISSONS	H-PILING
RESISTANCE FACTOR ϕ	0.4 END BEARING 0.45 SIDE SHEAR	0.65
ULTIMATE ALLOWABLE END BEARING CAPACITY	120 ksf x ϕ x Ag = 462 kips	40 ksi x ϕ x Ag = 403 kips
ULTIMATE ALLOWABLE SIDE SHEAR RESISTANCE	12.0 ksf x ϕ x PERIMETER (INTO HARD BEDROCK)=59.4 k/ft	--------
MAXIMUM FACTORED AXIAL DESIGN LOAD	461 kips	172 kips

PILING NOTES:

1. All Piles are End Bearing HP12x53.
2. All Piles shall be driven vertical.
3. Estimated Pile Tip Elevations: Abutment 1: 5333.0
   Abutment 5: 5335.0
4. Maximum Pile Design Service Load (HP12x53): 120 kips
5. Pile Driving Analyzer (PDA) is required for this project. The PDA monitoring shall be performed by the Contractor in accordance with the Project Specifications.
6. Actual depth of pile driving may vary from the estimated pile tip elevations shown on the plans due to the variability of the weathered bedrock. If the pile penetration extends below the estimated tip elevation by more than 10 feet, the Engineer shall be notified and pile driving stopped. Upon approval by the Engineer, the pile shall rest at least 12 hours and restruck to determine the pile capacity. If directed by the Engineer, a PDA shall be installed prior to restriking the piling, and monitored using a PDA. Pile driving criteria may be modified by the Engineer based upon the results of the pile restriking and the PDA.
7. Pile Tips are required.

CAISSON NOTES:

1. Caissons shall extend at least to the estimated tip elevation. Caissons shall be further advanced into the bedrock if necessary to obtain the specified minimum embedment.
2. Top of bedrock elevation shall be verified at time of construction by the Engineer.
3. The use of temporary casing & dewatering during drilling caissons may be required. The cost of temporary casing & dewatering shall not be paid for separately but shall be included in Item 503 - Drilled Caisson (42 Inch).
4. Estimated top of Bedrock elevation is to Hard Bedrock.

Design	INITIAL	DATE	Detail	INITIAL	DATE	Quantities	INITIAL	DATE
Designed By	XXX	MM/YY	Detailed By	KJS	06/09	Quantities By	XXX	MM/YY
Checked By	XXX	MM/YY	Checked By	CAD	08/09	Checked By	XXX	MM/YY

Revision Dates (Preliminary Stage Only) MM/YY MM/YY MM/YY

Sheet Revisions		
Date:	Comments	Init.

0000

FELSBURG HOLT & ULLEVIG
6300 South Syracuse Way Suite 600 Centennial, CO 80111
303.721.1440 fax 303.721.0832 fhu@fhueng.com

AURORA

Colorado Department of Transportation
2000 S. Holly Street
Denver, Co 80222
Phone: 303-757-9350 FAX: 303-757-9004
Region 6 RJE

As Constructed
No Revisions:
Revised:
Void:

I-225/COLFAX - PHASE 3
I-225 OVER COLFAX AVENUE
FOUNDATION DETAILS

Designer:	KMA	Structure Numbers	F-17-JK
Detailer:	KJS		
Sheet Subset:	BRIDGE	Subset Sheets:	B10 of 38

Project No./Code
STU 2254-082
17718
Sheet Number 51

soeliner 9:14:00 AM L:\09004\14493\Phase 3\Bridge\Drawings\14493BRDG_PH3_F-17-JK_Colfax_FoundationDetails.dgn
3/15/2011 CDOT-PDFDraftQuality_XM.pltcfg *

REV. MAR. 2011 211007

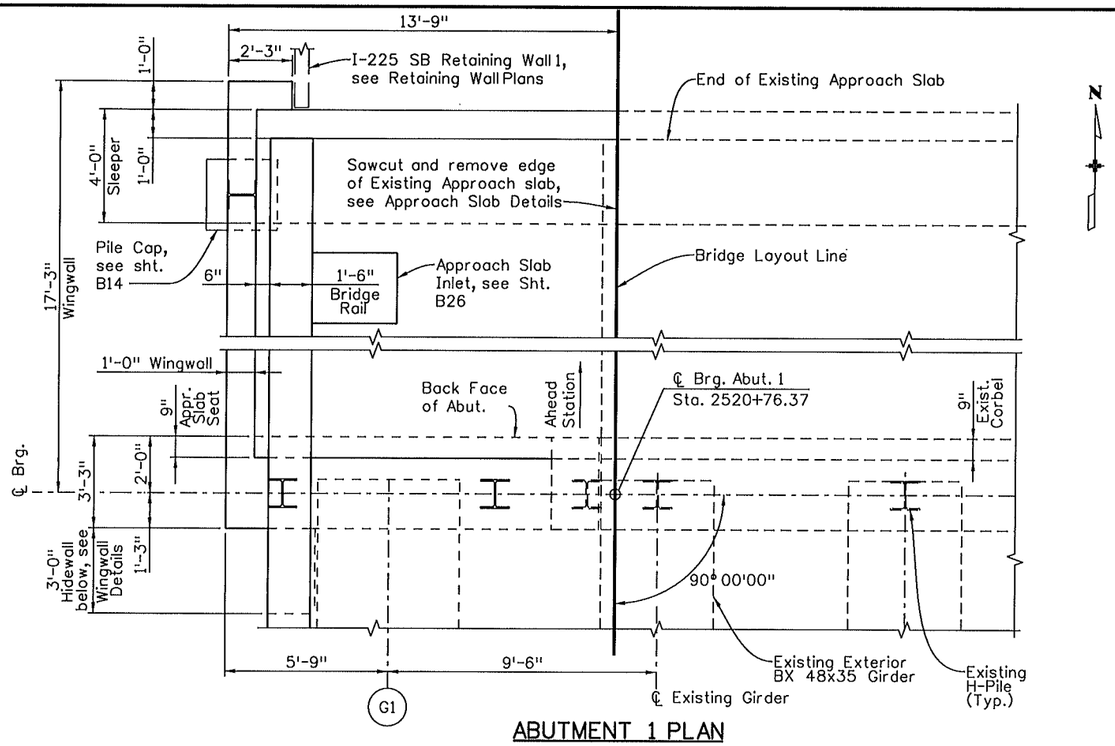

ABUTMENT 1 PLAN

Notes:

1. For Existing Wingwall and Hidewall removal, See Abutment Details.

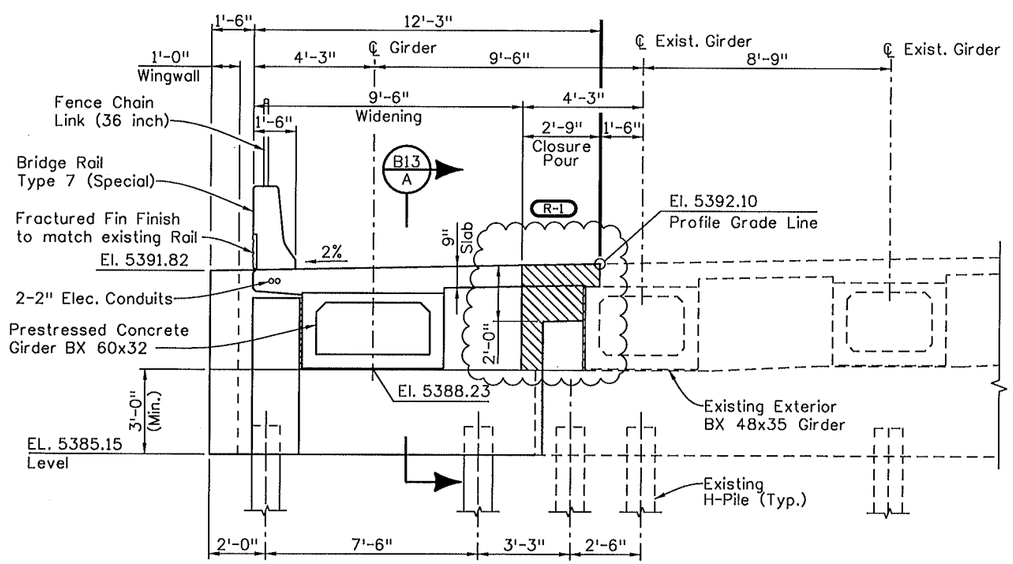

ABUTMENT 1 ELEVATION

Sheet Revisions		
Date:	Comments	Init.
05-02-11	Revised removal limits	PRS

R-1

FELSBURG HOLT & ULLEVIG
6300 South Syracuse Way, Suite 600, Centennial, CO 80111
303.721.1440 fax 303.721.0832 fhu@fhueng.com

AURORA

Colorado Department of Transportation
CDOT DEPARTMENT OF TRANSPORTATION
2000 S. Holly Street, Denver, Co 80222
Phone: 303-757-9350 FAX: 303-757-9004
Region 6 RJE

As Constructed
No Revisions:
Revised:
Void:

I-225/COLFAX - PHASE 3
I-225 OVER COLFAX AVENUE
ABUTMENT 1 PLAN & ELEVATION

Designer:	KMA/GWB	Structure Numbers	F-17-JK
Detailer:	KPS/RAD		
Sheet Subset:	BRIDGE	Subset Sheets:	B11 of 38

Project No./Code
STU 2254-082
17718
Sheet Number 52

Design			Detail			Quantities		
	INITIAL	DATE		INITIAL	DATE		INITIAL	DATE
Designed By	KMA	11/09	Detailed By	RAD	12/09	Quantities By		
Checked By			Checked By			Checked By		

Revision Dates (Preliminary Stage Only)

Ricdil 2:37:54 PM L:\09004\14493\Phase 3\Bridge\Drawings\14493BRDG_PH3_F-17-JK_Colfax_Abut1.dgn
4/27/2011 CDOT-PDFDraftQuality_XM.pltcfg CDOT-PenTable.tbl

REV. MAR. 2011 211007

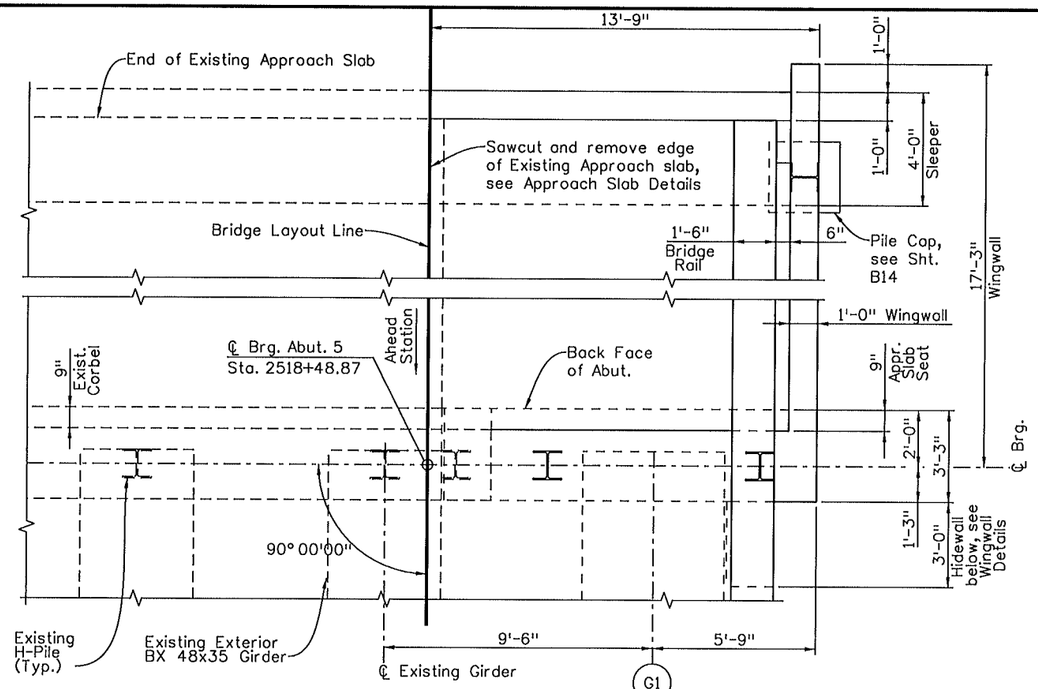

ABUTMENT 5 PLAN

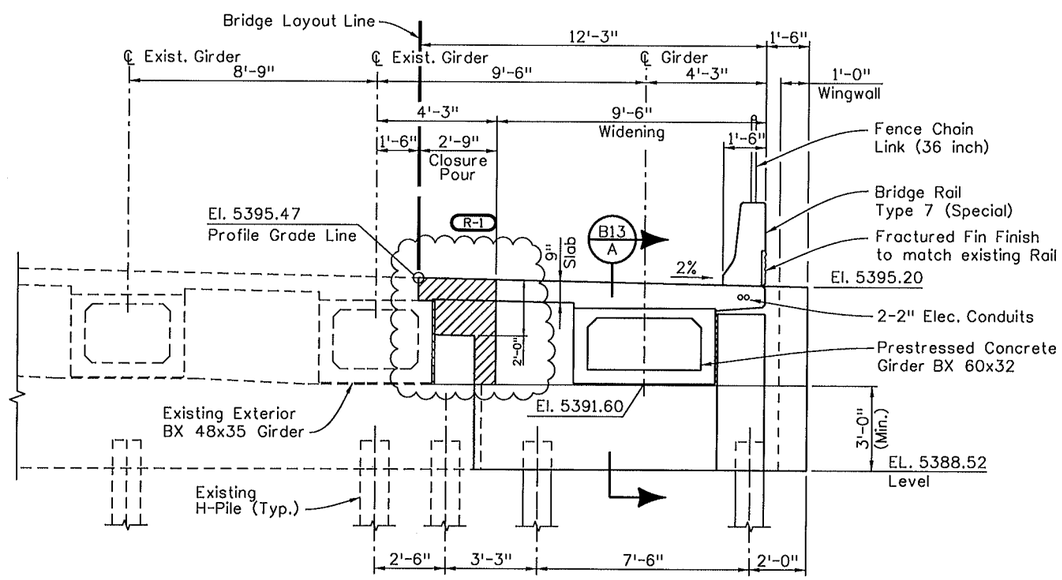

ABUTMENT 5 ELEVATION

Notes:

1. For Existing Wingwall and Hidewall removal, See Abutment Details.

Sheet Revisions		
Date:	Comments	Init.
05-02-11	Revised removal limits	PRS

R-1

FELSBURG HOLT & ULLEVIG
6300 South Syracuse Way Suite 600 Centennial, CO 80111
303.721.1440 fax 303.721.0832 fhu@fhueng.com

AURORA

Colorado Department of Transportation
DOT
2000 S. Holly Street
Denver, Co 80222
Phone: 303-757-9350 FAX: 303-757-9004
Region 6 RJE

As Constructed
No Revisions:
Revised:
Void:

I-225/COLFAX - PHASE 3
I-225 OVER COLFAX AVENUE
ABUTMENT 5 PLAN & ELEVATION

Designer:	KMA/GWB	Structure Numbers	F-17-JK
Detailer:	KPS/RAD		
Sheet Subset:	BRIDGE	Subset Sheets:	B12 of 38

Project No./Code
STU 2254-082
17718
Sheet Number 53

Revision Dates (Preliminary Stage Only)

Design				Detail				Quantities			
	INITIAL	DATE		INITIAL	DATE		INITIAL	DATE		INITIAL	DATE
Designed By	KMA	11/09	Detailed By	RAD	12/09	Quantities By					
Checked By			Checked By			Checked By					

Ricdl 2:39:26 PM L:\09004\14493\Phase 3\Bridge\Drawings\14493BRDG_PH3_F-17-JK_Colfax_Abut5.dgn
4/27/2011 CDOT-PDFDraftQuality_XM.pltcfg CDOT-PenTable.tbl

REV. MAR. 2011 211007

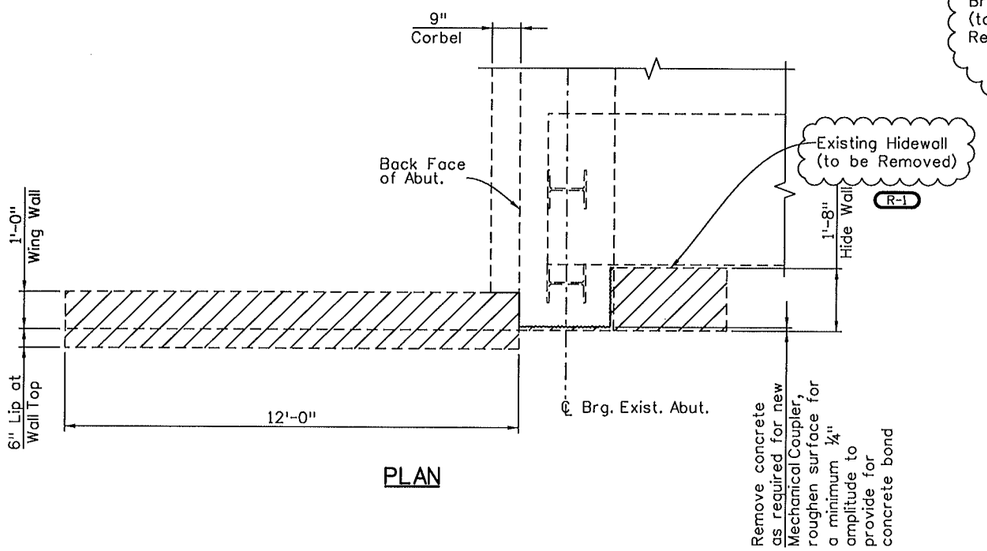

PLAN

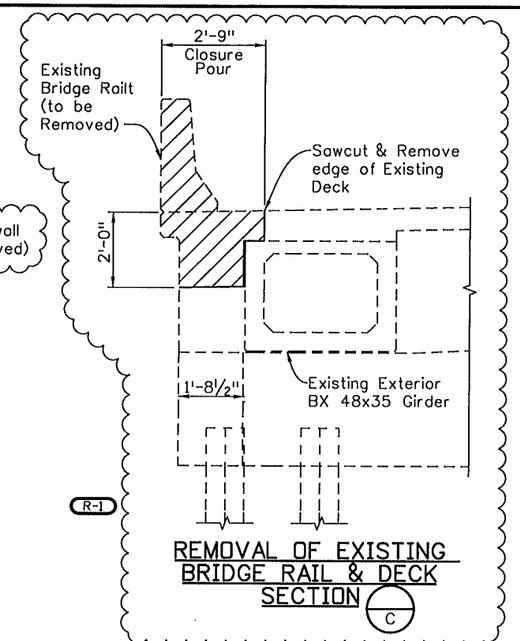

REMOVAL OF EXISTING BRIDGE RAIL & DECK SECTION (C)

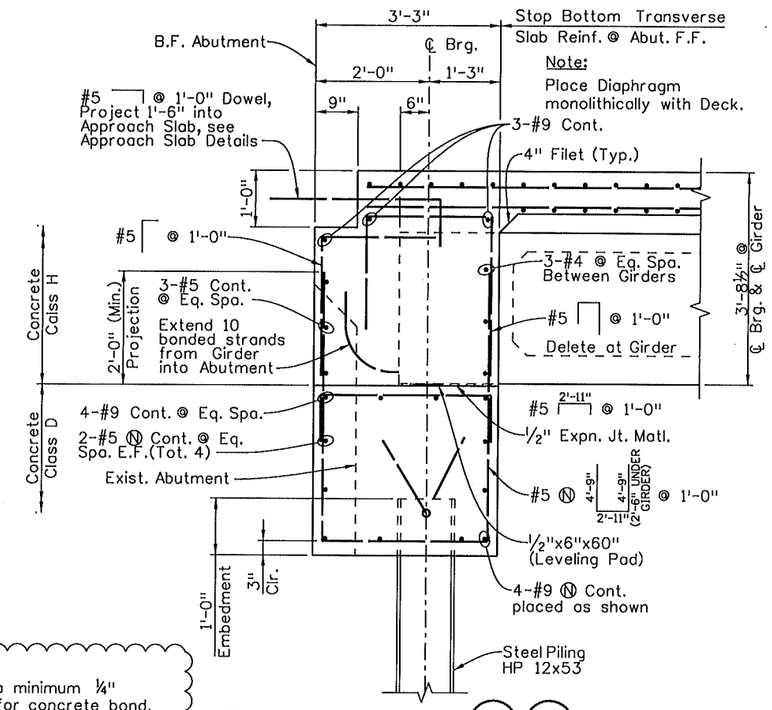

SECTION (B11/A) (B12/A)

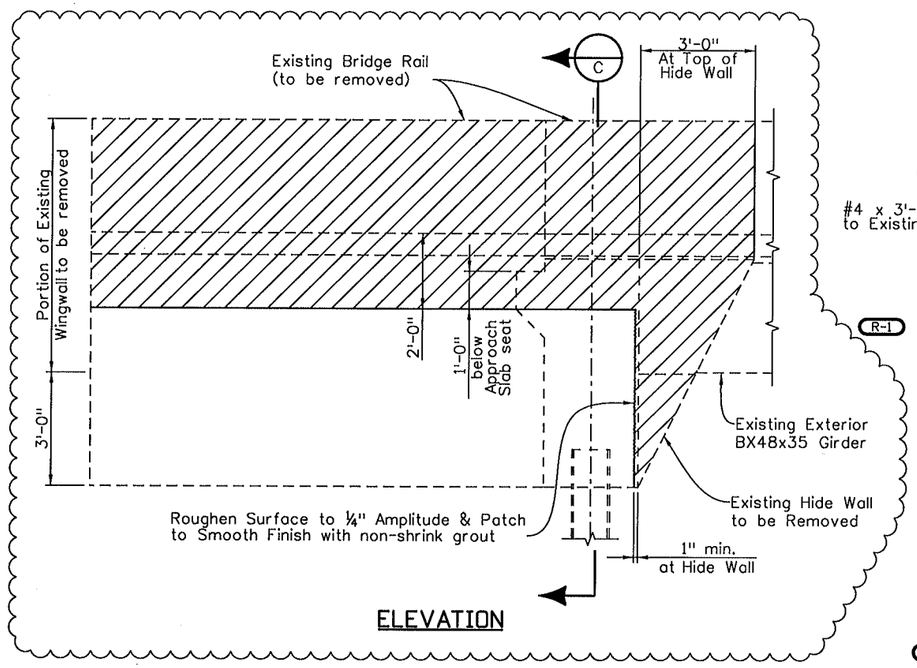

ELEVATION

REMOVAL OF EXISTING WEST WINGWALLS & HIDE WALLS

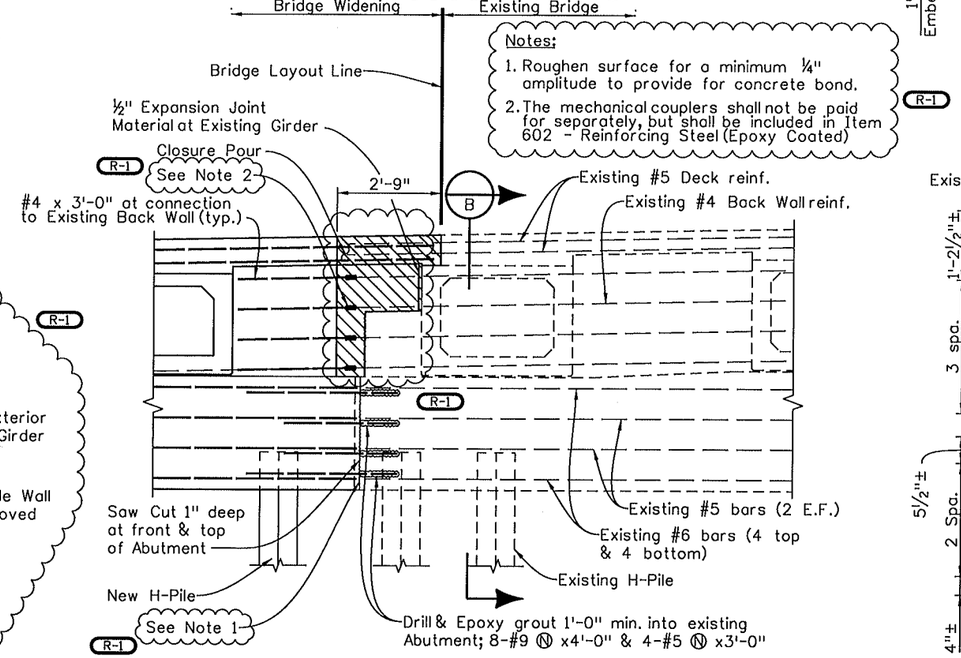

Notes:
1. Roughen surface for a minimum ¼" amplitude to provide for concrete bond.
2. The mechanical couplers shall not be paid for separately, but shall be included in Item 602 - Reinforcing Steel (Epoxy Coated)

NEW CONSTRUCTION/EXISTING ABUTMENT INTERFACE

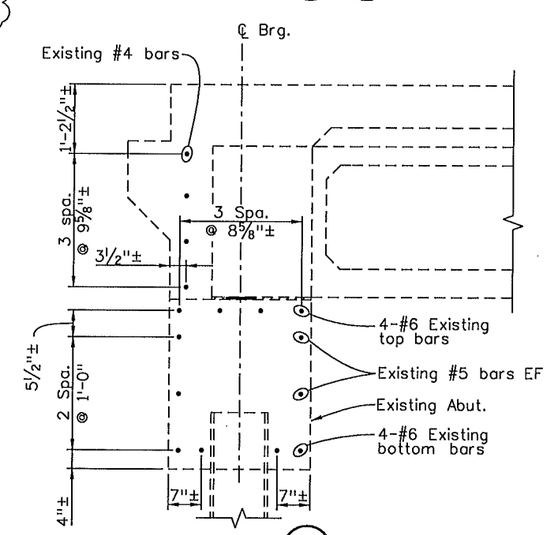

SECTION (B)

Sheet Revisions		
Date:	Comments	Init.
05-02-11	Revised removal limits	PRS

R-1

FELSBURG HOLT & ULLEVIG
6300 South Syracuse Way, Suite 600, Centennial, CO 80111
303.721.1440 fax 303.721.0832 fhu@fhueng.com

AURORA

Colorado Department of Transportation
DOT
2000 S. Holly Street
Denver, Co 80222
Phone: 303-757-9350 FAX: 303-757-9004
Region 6 RJE

As Constructed	I-225/COLFAX - PHASE 3 I-225 OVER COLFAX AVENUE ABUTMENT DETAILS			Project No./Code
No Revisions:				STU 2254-082
Revised:	Designer: KMA/GWB	Structure Numbers	F-17-JK	17718
Void:	Detailer: RAD			
	Sheet Subset: BRIDGE	Subset Sheets: B13 of 38		Sheet Number 54

Quantities					
Design	INITIAL	DATE	Detail	INITIAL	DATE
Designed By	KMA	11/09	Detailed By	RAD	12/09
Checked By			Checked By		
Quantities By					
Checked By					

(Preliminary Stage Only)

Revision Dates

Ricdi 3:54:27 PM L:\09004\14493\Phase 3\Bridge\Drawings\14493BRDG_PH3_F-17-JK_Colfax_AbutDetails01.dgn
4/27/2011 CDOT-PDFDraftQuality_XM.pltcfg CDOT-PenTable.tbl

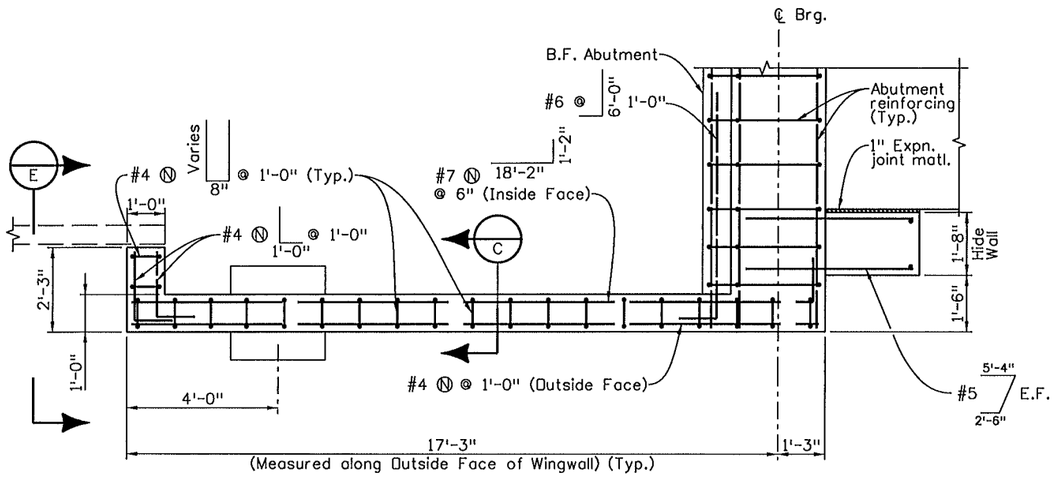

ABUTMENT 1 WINGWALL PLAN

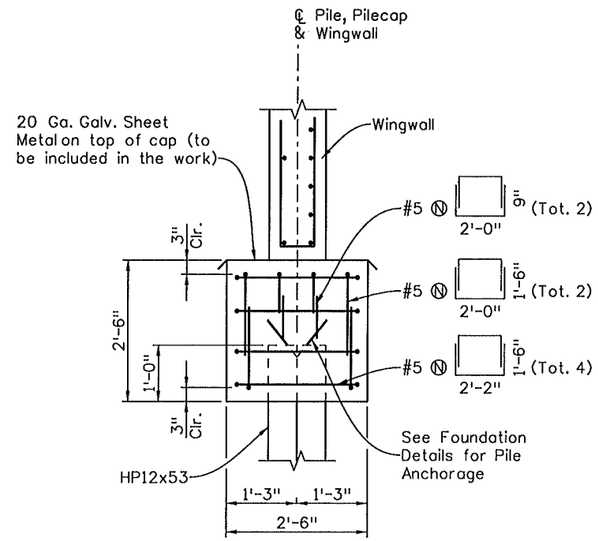

SECTION A B15 A

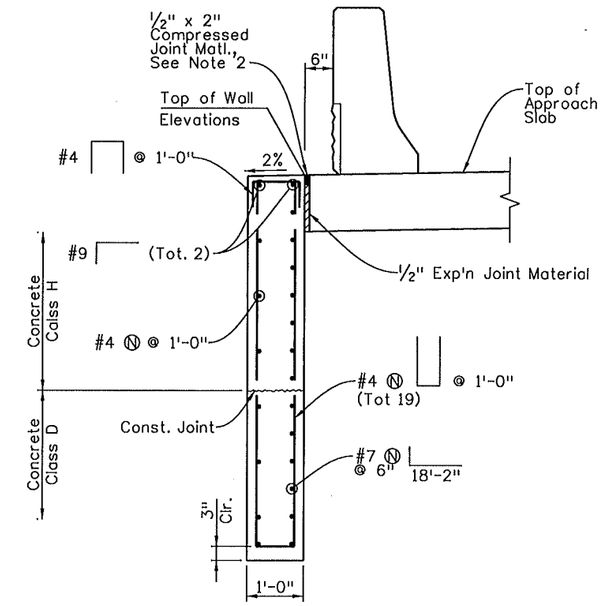

SECTION C

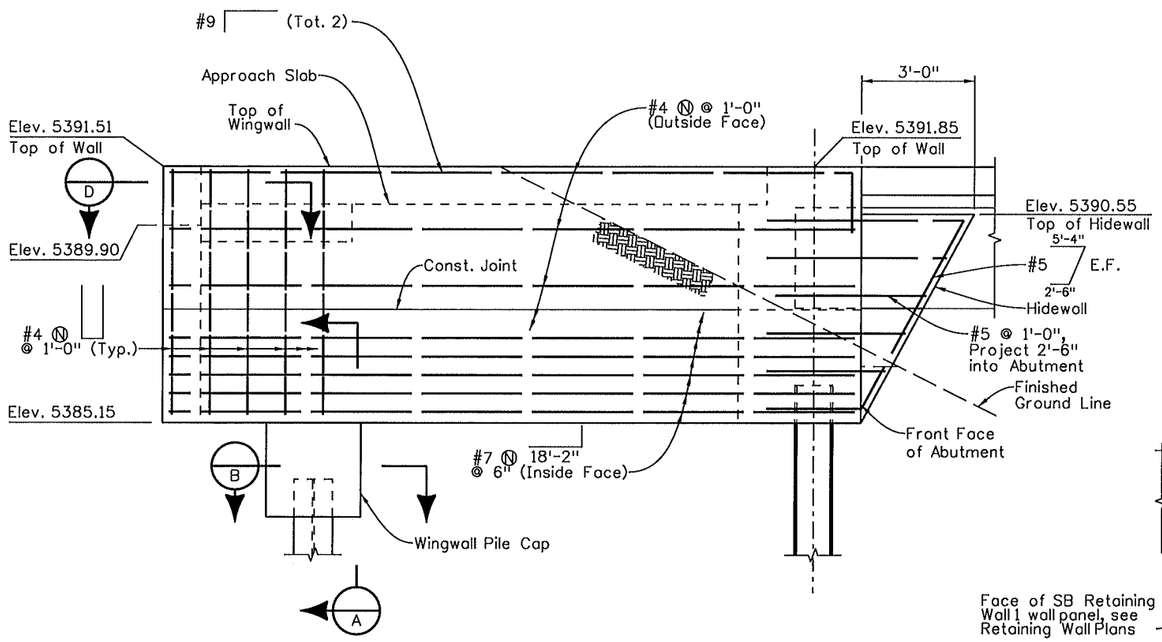

ABUTMENT 1 WINGWALL ELEVATION

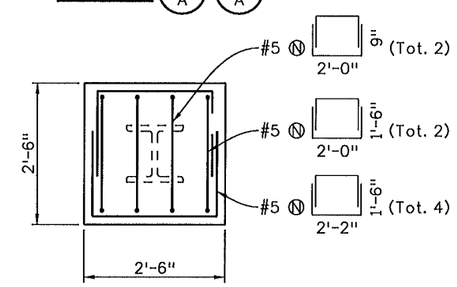

SECTION B B15 B

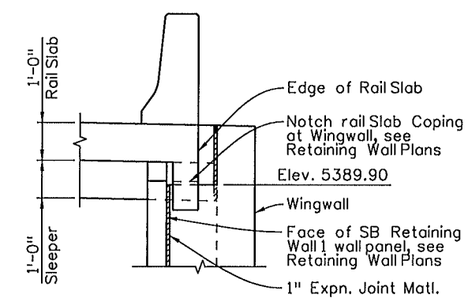

SECTION E

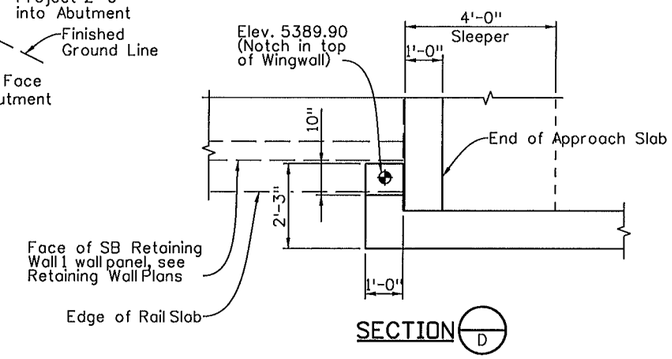

SECTION D

Notes:

1. Backfill at the outside face of the Wingwall shall be placed concurrently with backfill behind the Wingwall.
2. Compressed Joint Material shall be pre-compressed, chemically resistant, open cell polyurethane foam sealant, impregnated with a water-repellent material, with adhesive backing on both sides. The Joint Material shall be epoxied in place, and all splices sealed, as recommended by the supplier of the Joint Material. The cost shall be included in the cost of Item 601, Class D Concrete.

   Acceptable Compressed Joint Material Alternatives:
   Will-Seal
   Seal-Mate #517
   Poly-Tite "N"

Sheet Revisions		
Date:	Comments	Init.

FELSBURG HOLT & ULLEVIG
6300 South Syracuse Way Suite 600 Centennial, CO 80111
303.721.1440 fax 303.721.0832 fhu@fhueng.com

AURORA

Colorado Department of Transportation
CDOT DEPARTMENT OF TRANSPORTATION
2000 S. Holly Street
Denver, Co 80222
Phone: 303-757-9350 FAX: 303-757-9004
Region 6 RJE

As Constructed				
No Revisions:	I-225/COLFAX - PHASE 3 I-225 OVER COLFAX AVENUE ABUTMENT 1 WINGWALL DETAILS			Project No./Code
Revised:	Designer: KMA	Structure Numbers	F-17-JK	STU 2254-082
	Detailer: KPS			17718
Void:	Sheet Subset: BRIDGE	Subset Sheets: B14 of 38		Sheet Number 55

sselliner 9:14:13 AM L:\09004\14493\Phase 3\Bridge\Drawings\14493BRDG_PH3_F-17-JK_Colfax_WingWall01.dgn
3/15/2011 CDOT-PDFDraftQuality_XM.pltcfg

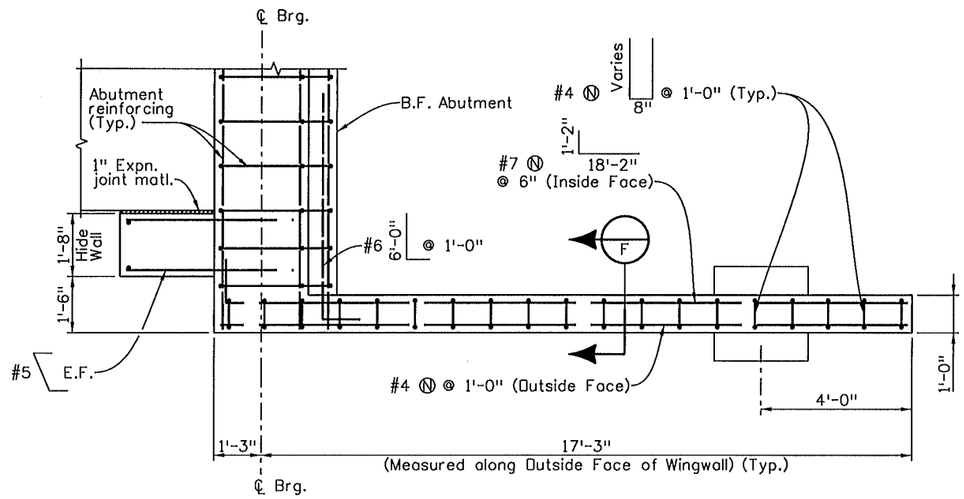

ABUTMENT 5 WINGWALL PLAN

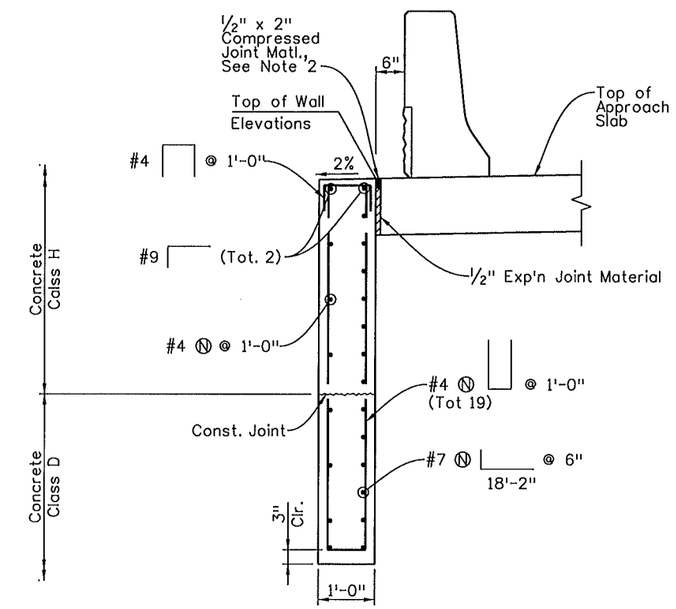

SECTION F

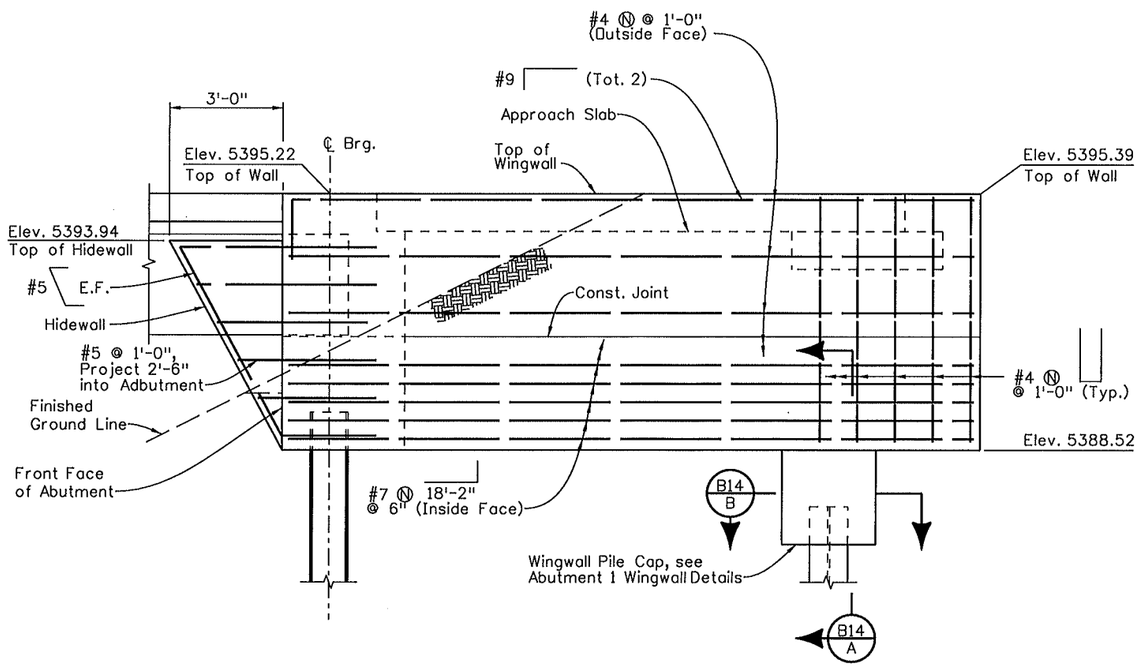

ABUTMENT 5 WINGWALL ELEVATION

Notes:

1. Backfill at the outside face of the Wingwall shall be placed concurrently with backfill behind the Wingwall.
2. Compressed Joint Material shall be pre-compressed, chemically resistant, open cell polyurethane foam sealant, impregnated with a water-repellent material, with adhesive backing on both sides. The Joint Material shall be epoxied in place, and all splices sealed, as recommended by the supplier of the Joint Material. The cost shall be included in the cost of Item 601, Class D Concrete.

   Acceptable Compressed Joint Material Alternatives:
   Will-Seal
   Seal-Mate #517
   Poly-Tite "N"

Sheet Revisions		
Date:	Comments	Init.

FELSBURG HOLT & ULLEVIG
6300 South Syracuse Way Suite 600 Centennial, CO 80111
303.721.1440 fax 303.721.0832 fhu@fhueng.com

AURORA

Colorado Department of Transportation
2000 S. Holly Street
Denver, Co 80222
Phone: 303-757-9350 FAX: 303-757-9004
Region 6 RJE

As Constructed	I-225/COLFAX - PHASE 3 I-225 OVER COLFAX AVENUE ABUTMENT 5 WINGWALL DETAILS			Project No./Code
No Revisions:				STU 2254-082
Revised:	Designer: KMA	Structure Numbers	F-17-JK	17718
Void:	Detailer: KPS			
	Sheet Subset: BRIDGE	Subset Sheets: B15 of 38		Sheet Number 56

soeliner 9:14:17 AM L:\09004\14493\Phase 3\Bridge\Drawings\14493BRDG_PH3_F-17-JK_Colfax_WingWall05.dgn
3/15/2011 CDOT-PDFDraftQuality_XM.pltcfg

MAR. 2011 211007

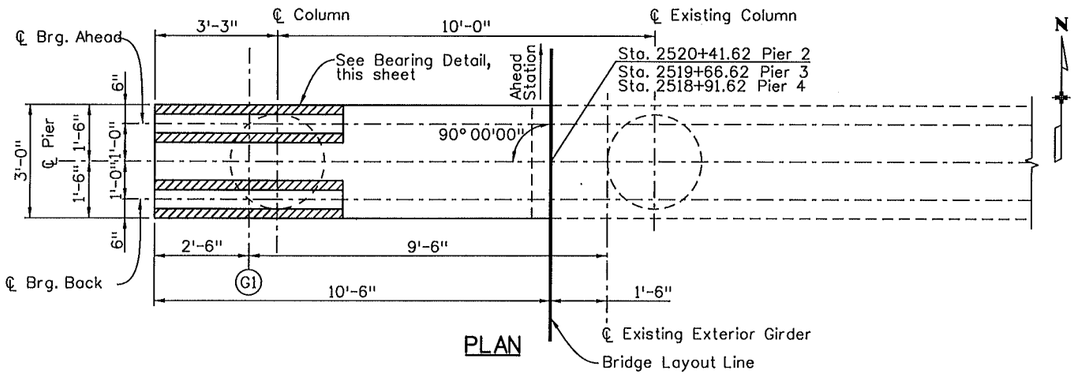

PLAN

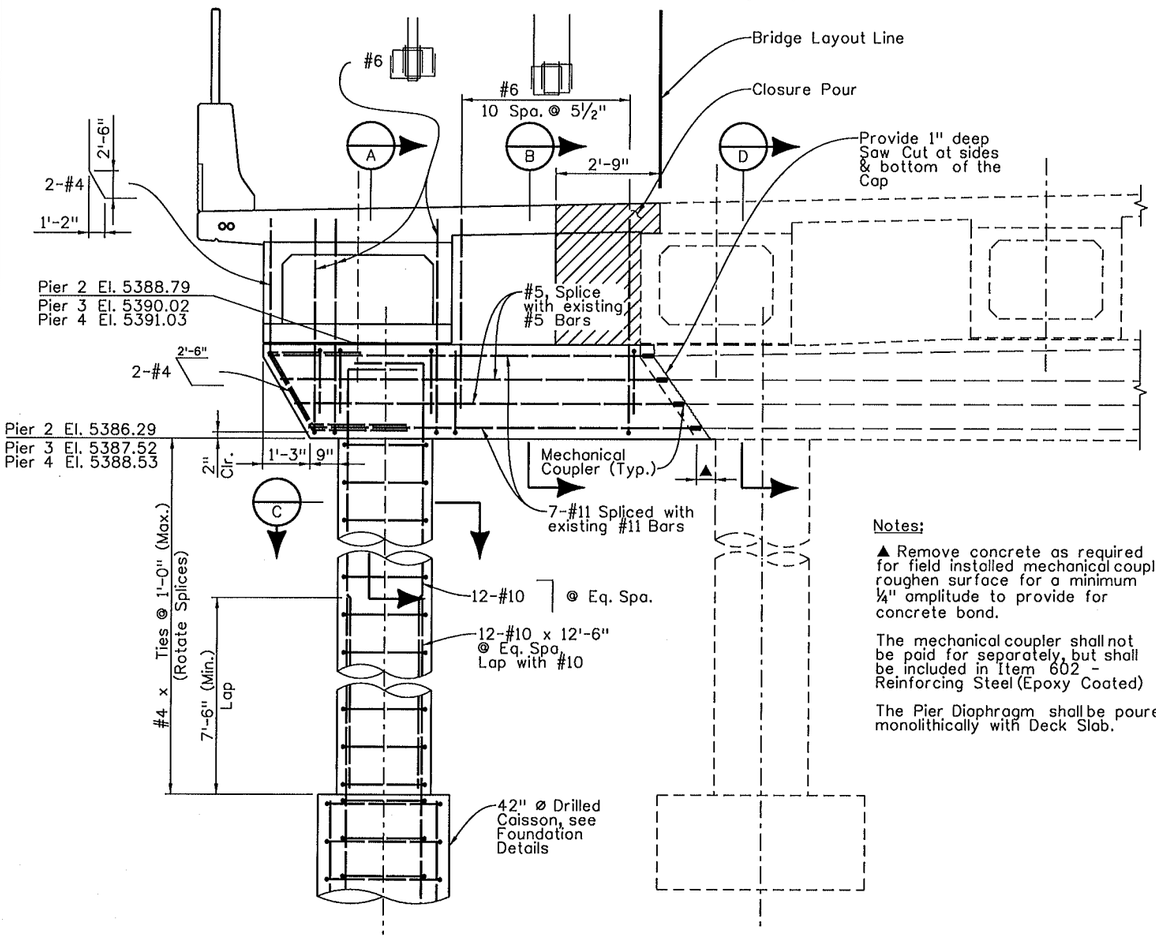

ELEVATION

Notes:

▲ Remove concrete as required for field installed mechanical coupler. roughen surface for a minimum ¼" amplitude to provide for concrete bond.

The mechanical coupler shall not be paid for separately, but shall be included in Item 602 - Reinforcing Steel (Epoxy Coated)

The Pier Diaphragm shall be poured monolithically with Deck Slab.

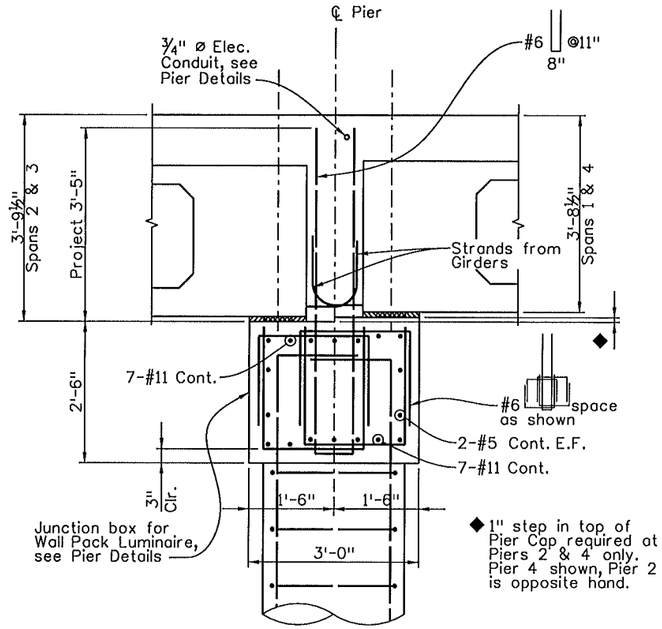

SECTION A

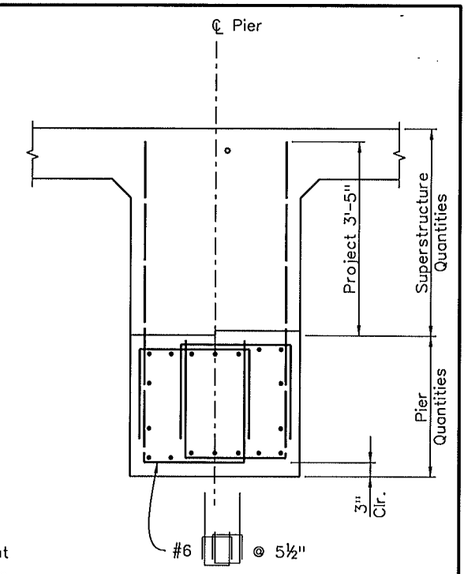

SECTION B

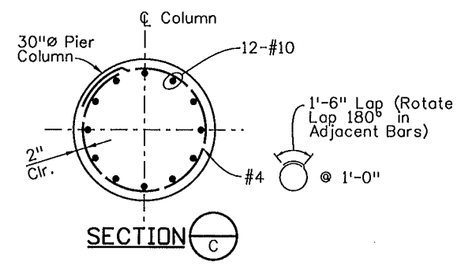

SECTION C

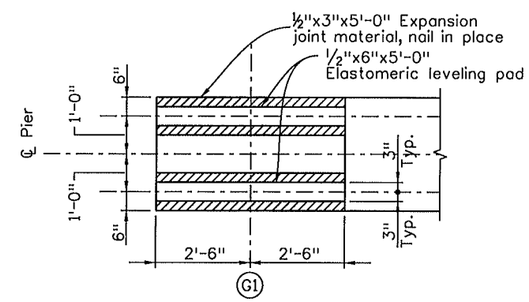

BEARING DETAIL

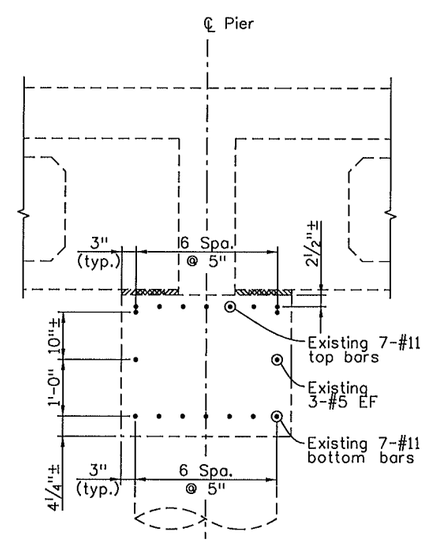

SECTION D

Revision Dates	(Preliminary Stage Only)

Quantities			
	INITIAL	DATE	
Quantities By			
Checked By			

Detail			
	INITIAL	DATE	
Detailed By	RAD	11/09	
Checked By			

Design			
	INITIAL	DATE	
Designed By	KMA	11/09	
Checked By			

soeliner 9:14:21 AM L:\09004\14493\Phase 3\Bridge\Drawings\14493BRDG_PH3_F-17-JK_Colfax_Piers01.dgn
3/15/2011 CDOT-PDFDraftQuality_XM.pltcfg

Sheet Revisions		
Date:	Comments	Init.

FELSBURG HOLT & ULLEVIG
6300 South Syracuse Way Suite 600 Centennial, CO 80111
303.721.1440 fax 303.721.0832 fhu@fhueng.com

AURORA

Colorado Department of Transportation
CDOT DEPARTMENT OF TRANSPORTATION
2000 S. Holly Street
Denver, Co 80222
Phone: 303-757-9350 FAX: 303-757-9004
Region 6 RJE

As Constructed
No Revisions:
Revised:
Void:

I-225/COLFAX - PHASE 3
I-225 OVER COLFAX AVENUE
PIER 2, 3 & 4 PLAN & ELEVATION

Designer:	KMA	Structure Numbers	F-17-JK
Detailer:	KPS		
Sheet Subset:	BRIDGE	Subset Sheets:	B16 of 38

Project No./Code
STU 2254-082
17718
Sheet Number 57

MAR. 2011 211007

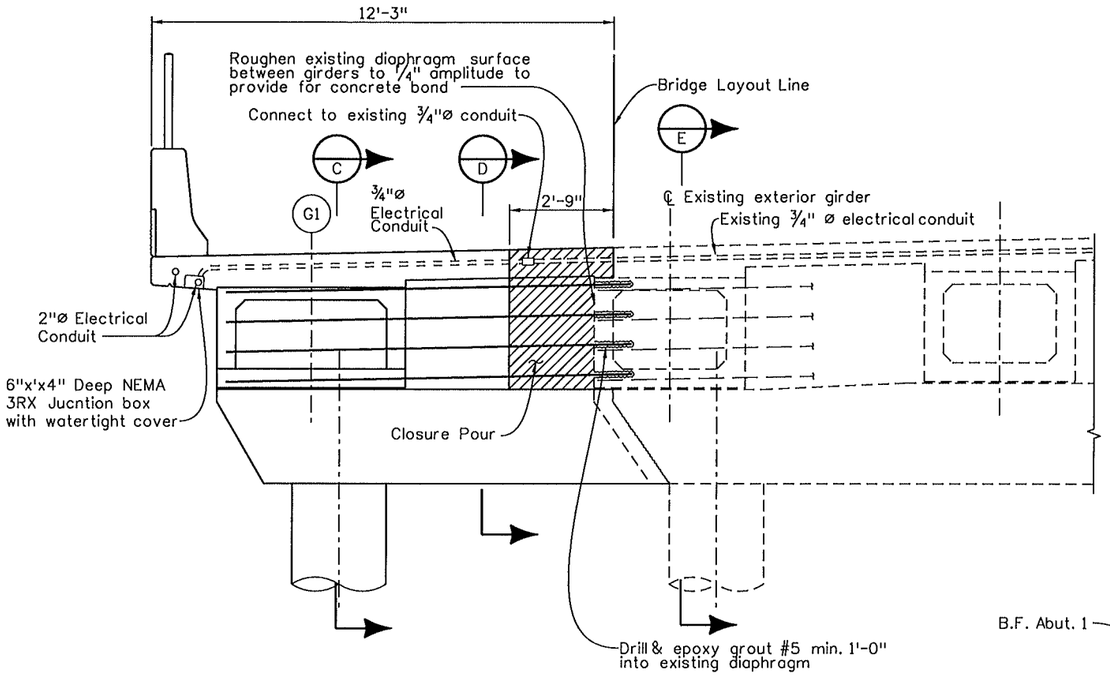

PIER DIAPHRAGM ELEVATION

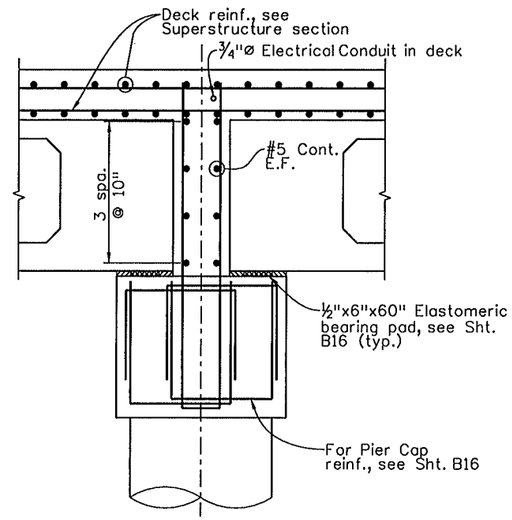

SECTION C

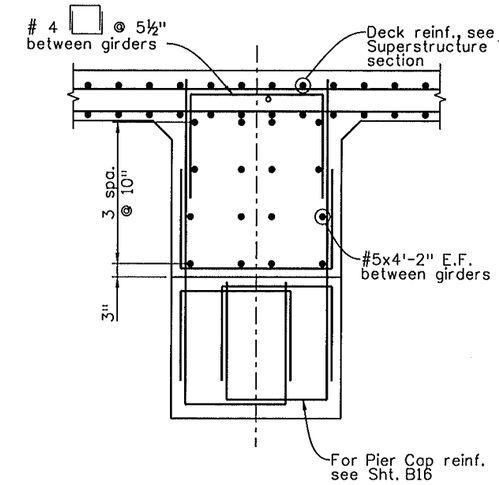

SECTION D

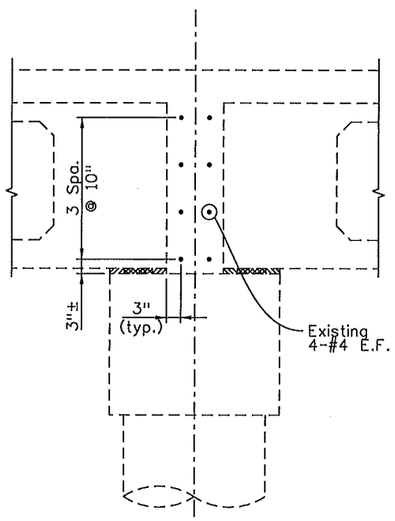

SECTION E

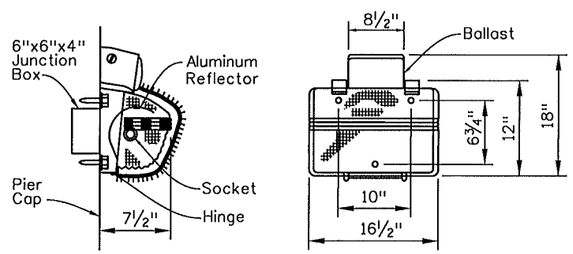

WALL PACK DETAIL
(Dimensions are approximate)

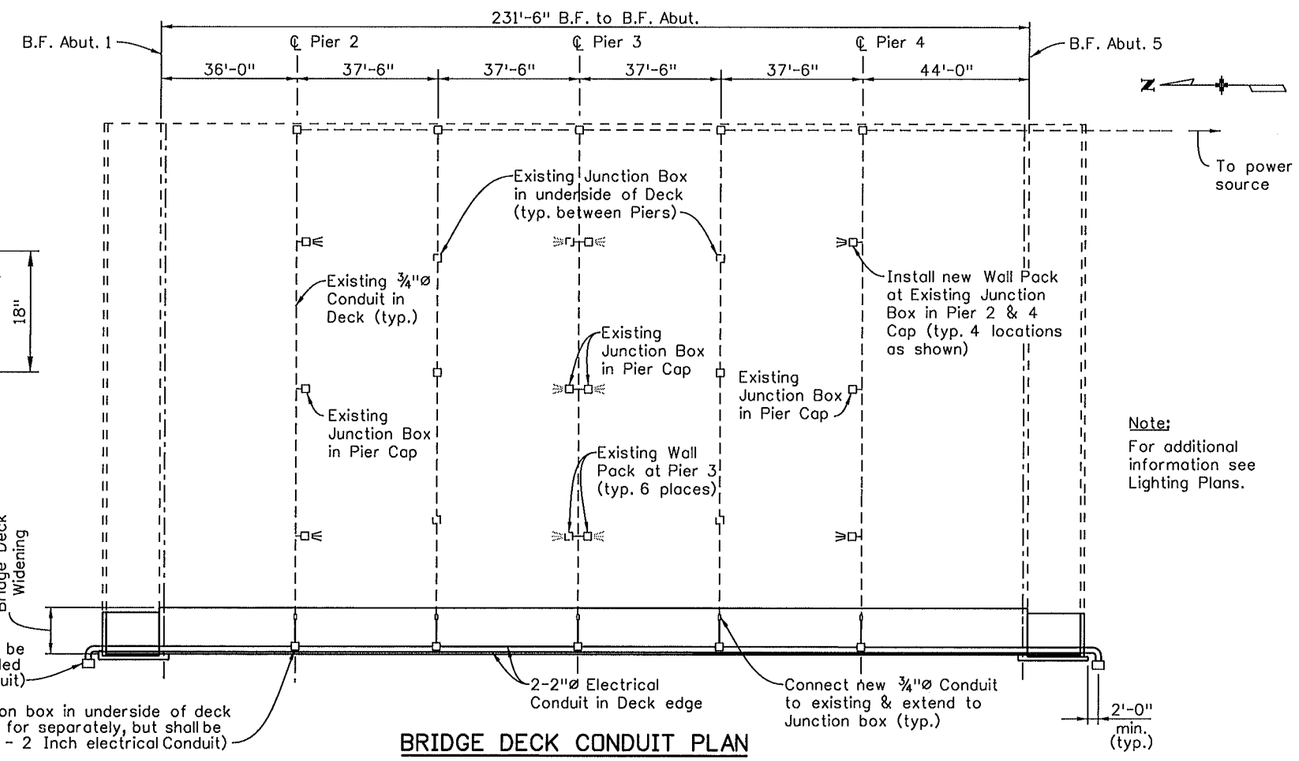

BRIDGE DECK CONDUIT PLAN

Note:
For additional information see Lighting Plans.

Sheet Revisions		
Date:	Comments	Init.

FELSBURG HOLT & ULLEVIG
6300 South Syracuse Way Suite 600 Centennial, CO 80111
303.721.1440 fax 303.721.0832 fhu@fhueng.com

AURORA

Colorado Department of Transportation
DOT
2000 S. Holly Street
Denver, Co 80222
Phone: 303-757-9350 FAX: 303-757-9004
Region 6 RJE

As Constructed				
No Revisions:	I-225/COLFAX - PHASE 3 I-225 OVER COLFAX AVENUE PIER DETAILS			Project No./Code
Revised:	Designer: KMA	Structure Numbers	F-17-JK	STU 2254-082
	Detailer: RAD			17718
Void:	Sheet Subset: BRIDGE	Subset Sheets: B17 of 38		Sheet Number 58

Quantities

Detail							
Designed By	INITIAL	DATE	Detailed By	INITIAL	DATE	Quantities By	INITIAL	DATE
Checked By			Checked By			Checked By		

Revision Dates (Preliminary Stage Only)

Design

Designed By	INITIAL	DATE
KMA		11/09
Checked By		

spoeliner 9:14:25 AM L:\09004\14493\Phase 3\Bridge\Drawings\14493BRDG_PH3_F-17-JK_Colfax_Piers02.dgn
3/15/2011 CDOT-PDFDraftQuality_XM.pltcfg *

MAR. 2011 211007

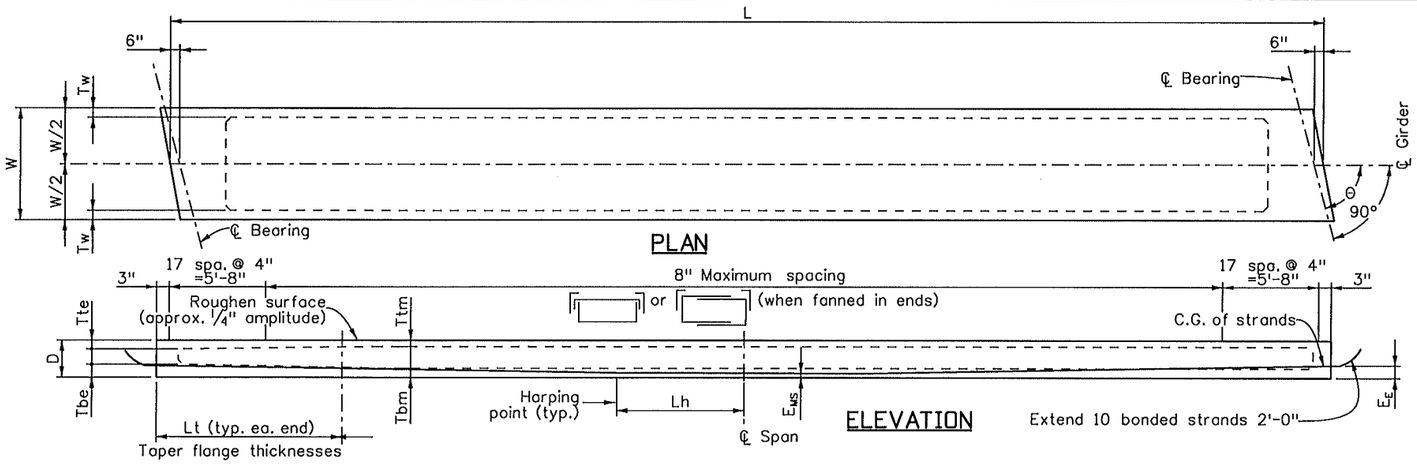

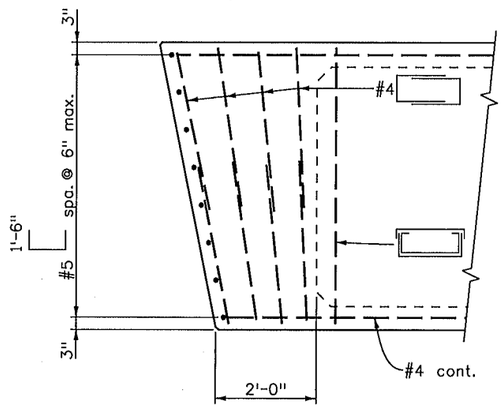

END DETAIL (PLAN)

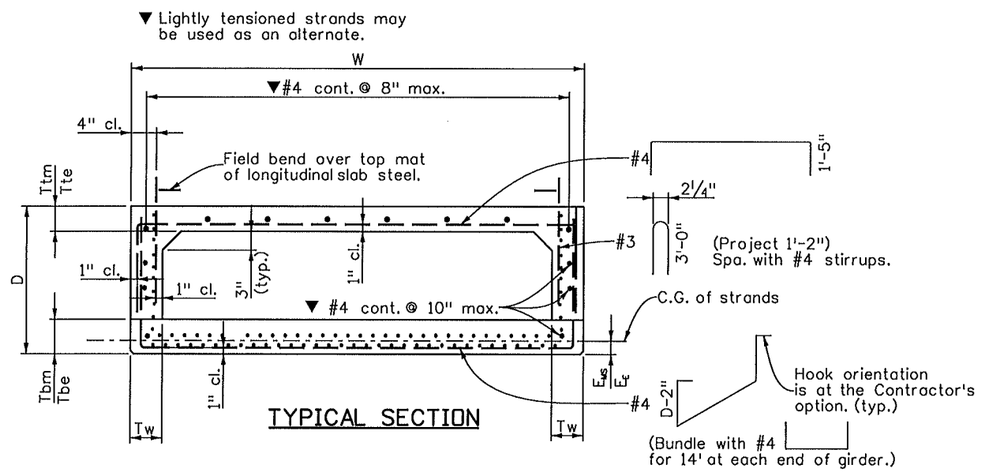

TYPICAL SECTION

NOTES:

All work necessary to fabricate and install the integral parts of the girder (including the intermediate diaphragms, if any, and leveling pads), as shown on the plans, shall be included in the bid price for Item No. 618, Prestressed Concrete Box ( ), with a pay unit of Sq. Ft. measured by L x W.

When approved by the Engineer, a minimum of tack welding will be permitted on ASTM A706 uncoated reinforcing steel.

Reinforcing projecting from the top of the girder and reinforcing within eight feet of an expansion device in the bridge deck shall be epoxy coated. Damaged coating on girder reinforcing need not be repaired. The minimum cover for reinforcing steel is 1".

Welded wire fabric may be used with D20 wires in lieu of the #4 bars shown.

At girder ends not embedded in concrete diaphragms, cut strands off 1" below the surface of the concrete and finish with an approved epoxy grout. At girder ends embedded in concrete diaphragms, cut strands to project 3", except as shown. Do not make cosmetic repairs (damage less than 1½" deep) to the parts of the girders embedded in concrete.

Use low relaxation strands meeting the requirements of ASTM A-416 Grade 270. The minimum clear distance between groups or individual strands shall be 2.3(d_s) but not less than 1¼". The minimum cover for prestressing steel is 1½".

A_s* = minimum area of the prestressing steel.
d_s = nominal strand diameter.
f'_s = ultimate strength of prestressing steel.
F_j = jacking force per girder.
F_f = final force per girder after all losses.
f'_{ci} = required concrete strength at release of prestress force.
f'_c = required concrete strength at 28 days of age.
L = length of girder along the grade of the girder.
Δ = deflection at centerline of span due to cast-in-place slab, diaphragms, asphalt, curbs, rails, and walks.
Θ = bridge skew angle

Concrete shall be Class PS.

Entrained air is not required for girder concrete.

End blocks shall be used on all girders unless otherwise noted.

Use ½" chamfer on all corners, except as noted.

Predicted camber is the camber for the girder alone at 90 days. The Contractor shall limit the camber growth to a value not to exceed the predicted camber plus 1" prior to the deck pour by weighting, scheduling fabrication, post tensioning, or other means and must report to the Engineer values of camber which exceed the predicted camber plus 1". Remedial measures, as approved by the Engineer, shall be taken if the predicted camber plus 1" is exceeded. The approved remedial measures shall be free of any adverse impact. The costs associated with all remedial measures shall be borne by the Contractor.

Side by side boxes placed over roads or pedestrian facilities shall not have cambers of adjacent boxes differ by more than 1" before the deck pour. Prior to placing deck reinforcing, the Contractor shall adjust this differential to within this limit by sorting the boxes to minimize differentials, or by pulling the high boxes down and low boxes up.

Depth (D) tolerance shall be +½", -¼".

The Contractor is responsible for determining necessary bracing requirements, and for providing adequate bracing for the specific wind and weather conditions to be encountered for each specific project.

Debonding shall extend in uniformly varying lengths to 3 ft. before the harping point shown, but not closer than 17 feet to the center of the span.

GIRDER SCHEDULE

Span No.	Girder No.	L (Feet)	W (Inch)	D (Inch)	Θ (Deg.)	Tw (Inch)	Tbm (Inch)	Ttm (Inch)	Tbe (Inch)	Tte (Inch)	Lt (Feet)	Lh (Feet)	A_s* (Squre Inch)	Debonded Strands (percent)	E_E (Inch)	E_{MS} (Inch)	F_j (KIPS)	F_f (KIPS)	Concrete Strength f'_{ci} (PSI)	Concrete Strength f'_c (PSI)	Δ (Inch)	Predicted Release Camber (Inch)	Predicted Camber (Inch)
1	G1	34.75	60	32	90	6	6	4	6	4	0	0	5.208	0%	3.0	3.0	1055	806	5000	5500	0.080	0.425	0.763
2	G1	74.00	60	32	90	6	6	4	6	4	0	0	8.680	10%	2.9	2.9	1758	1289	6800	7500	1.470	2.101	3.731
3	G1	74.00	60	32	90	6	6	4	6	4	0	0	8.680	10%	2.9	2.9	1758	1289	6800	7500	1.470	2.101	3.731
4	G1	42.75	60	32	90	6	6	4	6	4	0	0	5.208	0%	3.0	3.0	1055	818	5000	5500	0.181	0.603	1.080

Sheet Revisions		
Date:	Comments	Init.

FELSBURG HOLT & ULLEVIG
6300 South Syracuse Way Suite 600 Centennial, CO 80111
303.721.1440 fax 303.721.0832 fhu@fhueng.com

AURORA

Colorado Department of Transportation
2000 S. Holly Street
Denver, Co 80222
Phone: 303-757-9350 FAX: 303-757-9004
Region 6 RJE

As Constructed
No Revisions:
Revised:
Void:

I-225/COLFAX - PHASE 3
I-225 OVER COLFAX AVENUE
PRESTRESSED CONCRETE BOX GIRDER

Designer:	KMA	Structure Numbers	F-17-JK
Detailer:	KPS		
Sheet Subset:	BRIDGE	Subset Sheets:	B18 of 38

Project No./Code
STU 2254-082
17718
Sheet Number 59

Revision Dates (Preliminary Stage Only)	3/99	4/99	11/99	5/00	4/02	9/02	2/06	3/07

Design	INITIAL	DATE	Detail	INITIAL	DATE	Quantities	INITIAL	DATE
Designed By	XXX	MM/YY	Detailed By	XXX	MM/YY	Quantities By	XXX	MM/YY
Checked By	XXX	MM/YY	Checked By	XXX	MM/YY	Checked By	XXX	MM/YY

soellner 9:14:28 AM L:\09004\14493\Phase 3\Bridge\Drawings\14493BRDG_PH3_F-17-JK_Colfax_Girder.dgn
3/15/2011 CDOT-PDFDraftQuality_XM.pltcfg

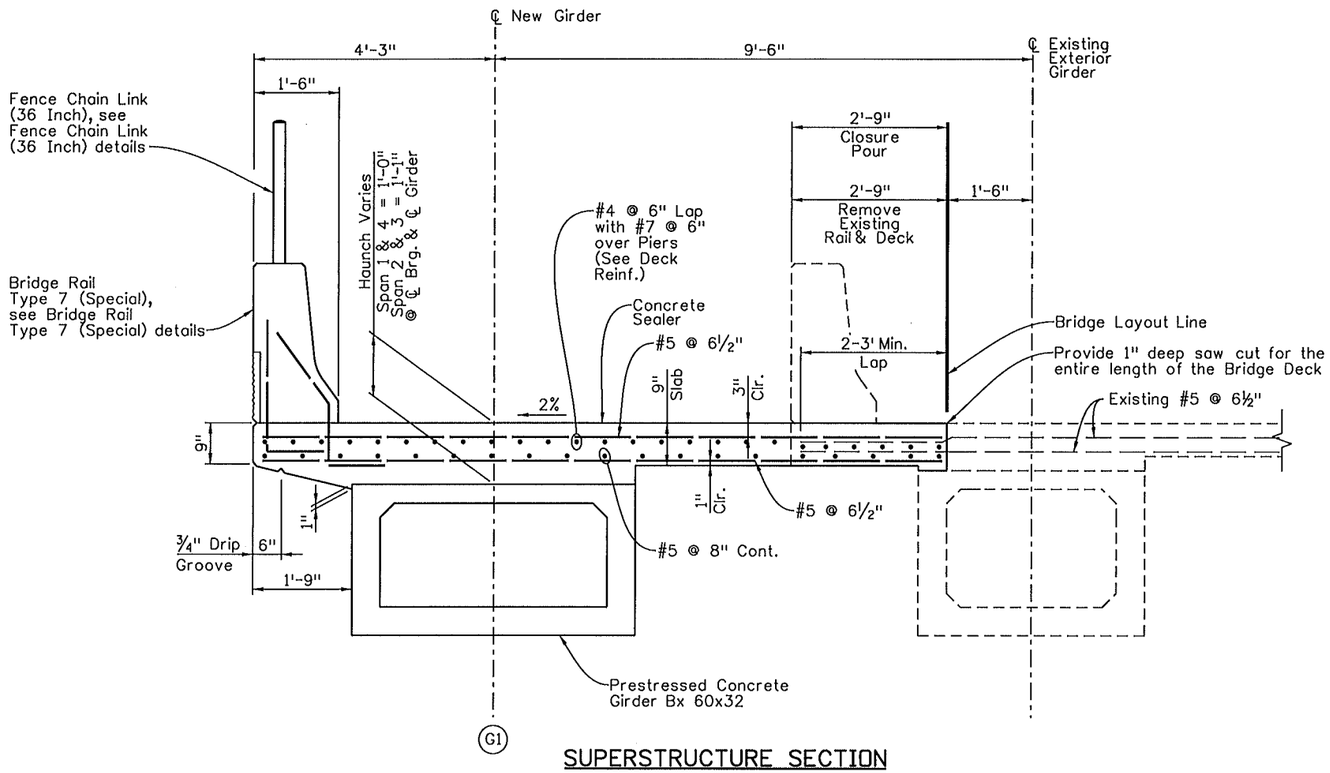

SUPERSTRUCTURE SECTION

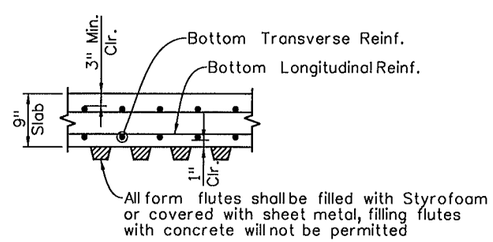

PERMANENT STEEL DECK FORM DETAIL

NOTES:

1. The contractor shall remove the existing concrete deck to 1" below the bottom of the transverse reinforcing steel without damaging the existing girder top flanges. The contractor shall take all necessary measures to protect the existing girder and structure during the removal of portion of the structure. The contractor shall be responsible for any damage to the existing girders during the removal of portion of the bridge deck. Repair or replacement of the damaged girders or remaining structure shall be the contractor's responsibility, at no additional cost to the project.
2. The contractor shall submit a work plan for review and approval by the engineer on the equipment and procedures to be used to remove the portion of the existing structure prior to the commencement of the removal operation. See project special provisions Item 202 - Removal of Portions of Present Structure for removal requirements.
3. The contractor shall thoroughly clean and straighten the top and bottom mat of the deck transverse reinforcing steel prior to pouring concrete.
4. Concrete sealer shall be applied to the bridge deck and up face of Bridge Rail to 6" above the finish grade.
5. All Bridge Deck concrete shall be Class H.

Sheet Revisions		
Date:	Comments	Init.

FELSBURG HOLT & ULLEVIG
6300 South Syracuse Way Suite 600 Centennial, CO 80111
303.721.1440 fax 303.721.0832 fhu@fhueng.com

AURORA

Colorado Department of Transportation
2000 S. Holly Street
Denver, Co 80222
Phone: 303-757-9350 FAX: 303-757-9004
Region 6 RJE

As Constructed			
No Revisions:			
Revised:			
Void:			

I-225/COLFAX - PHASE 3
I-225 OVER COLFAX AVENUE
SUPERSTRUCTURE SECTION

Designer:	KMA	Structure Numbers	F-17-JK
Detailer:	KPS		
Sheet Subset:	BRIDGE	Subset Sheets:	B19 of 38

Project No./Code
STU 2254-082
17718
Sheet Number 60

sselliner 9:14:33 AM L:\09004\14493\Phase 3\Bridge\Drawings\14493BRDG_PH3_F-17-JK_Colfax_Superstructure.dgn
3/15/2011 CDOT-PDFDraftQuality_XM.pltcfg

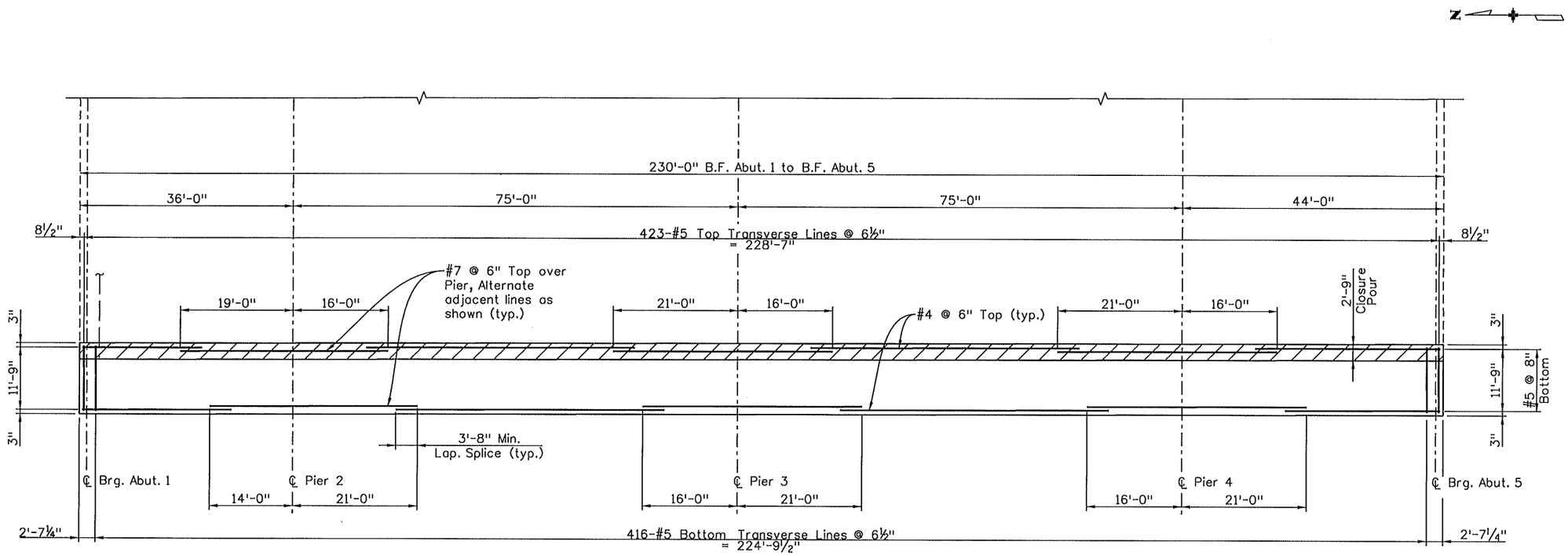

DECK REINFORCING PLAN

Sheet Revisions		
Date:	Comments	Init.

FELSBURG HOLT & ULLEVIG
6300 South Syracuse Way 303.721.1440
Suite 600 fax 303.721.0832
Centennial, CO 80111 fhu@fhueng.com

AURORA

Colorado Department of Transportation
CDOT
2000 S. Holly Street
Denver, Co 80222
Phone: 303-757-9350 FAX: 303-757-9004
Region 6 RJE

As Constructed
No Revisions:
Revised:
Void:

I-225/COLFAX - PHASE 3
I-225 OVER COLFAX AVENUE
DECK REINFORCING PLAN

Designer:	KMA	Structure Numbers	F-17-JK
Detailer:	KPS		
Sheet Subset:	BRIDGE	Subset Sheets:	B20 of 38

Project No./Code
STU 2254-082
17718
Sheet Number 61

soeliner 9:14:36 AM L:\09004\14493\Phase 3\Bridge\Drawings\14493BRDG_PH3_F-17-JK_Colfax_DeckReinfPlan.dgn
3/15/2011 CDOT-PDFDraftQuality_XM.pltcfg *

MAR. 2011 211007

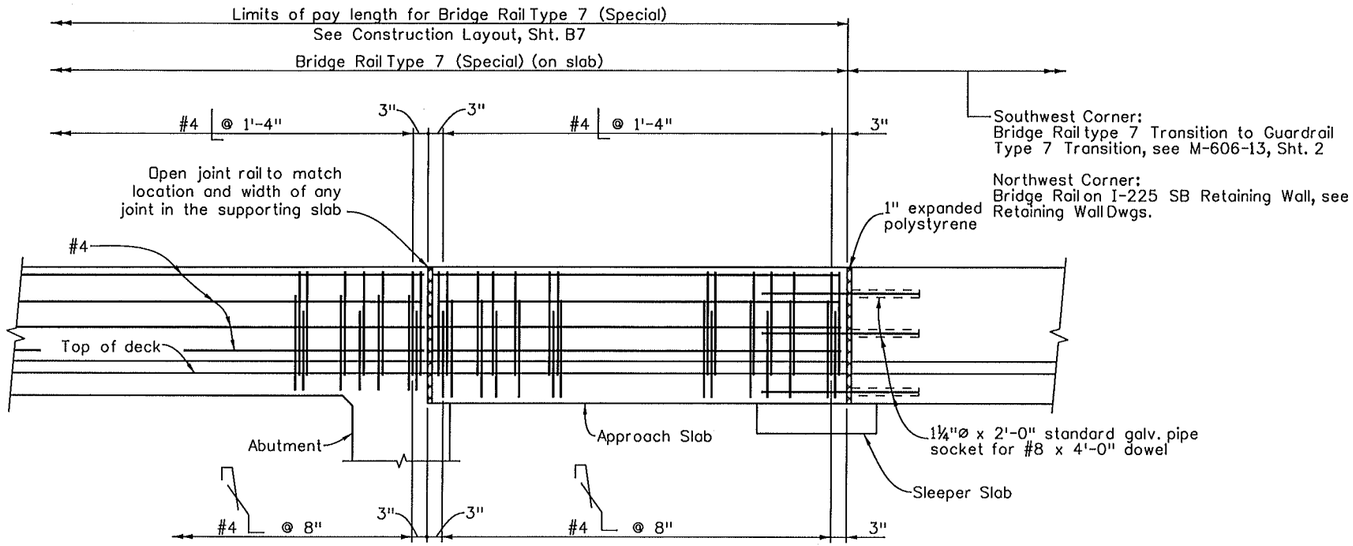

ELEVATION

TRANSITION TO CONNECT
BRIDGE RAIL TYPE 7 TO GUARDRAIL TYPE 7

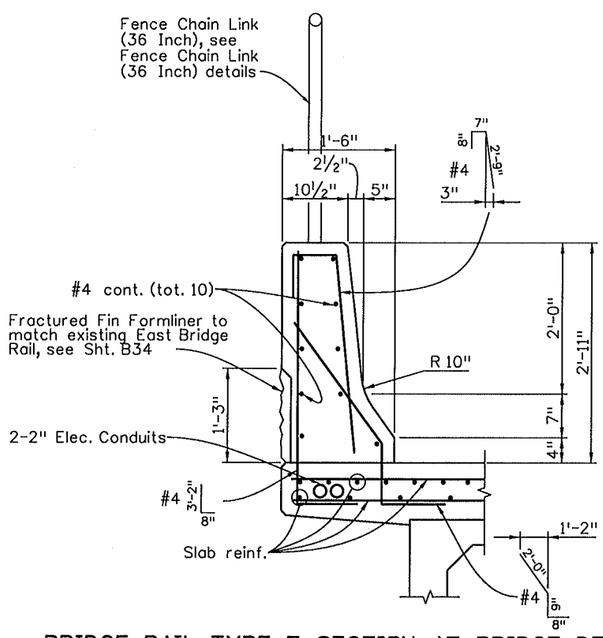

BRIDGE RAIL TYPE 7 SECTION AT BRIDGE DECK WIDENING

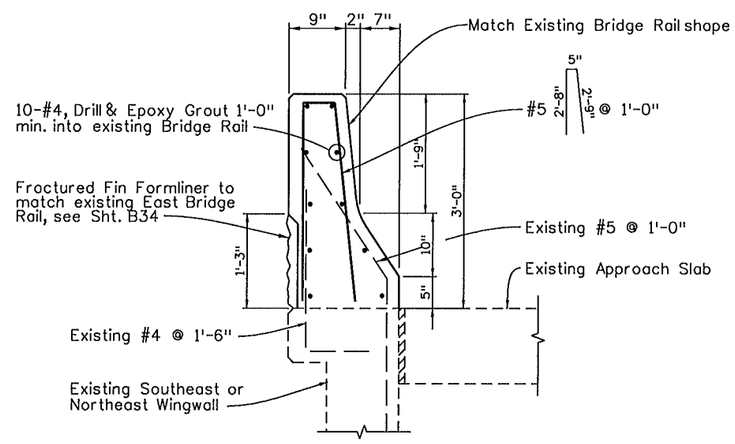

BRIDGE RAIL TYPE 4 SECTION AT EXISTING EAST WINGWALLS
AT EXPANSION JOINT REPLACEMENT

NOTES:

Backfill wingwalls and retaining walls before barrier is placed.

All bridge rail concrete shall be Class D.

Longitudinal reinforcement shall stop at all expansion joints.

Bridge rail shall be constructed plumb.

See Std. M-606-1 and M-606-13 for Guard Rail Type 3 details and details of transition.

Concrete and reinforcing steel shall conform to the requirements of Sections 601 and 602. Payment will be made under Item 606, Bridge Rail Type 7 (Special). Form Liner will not be paid for separately but cost shall be included in the cost of the Bridge Rail.

The surface of the rail shall be tested with a 10 foot straightedge laid along the surface in the longitudinal direction. Deviation of the concrete surface from the straightedge shall be less than ¼" plus allowance for roadway horizontal and vertical curvature, if any.

DESIGN DATA

Reinforced Concrete:

Class D Concrete: f'_c = 4,500 psi
Reinforcing Steel: f_y = 60,000 psi

INFORMATION ONLY

Description	Unit	Per Lin. Ft.
Concrete Class D	Cu. Yd.	0.12
Reinforcing Steel (Epoxy)	Lb.	16.2

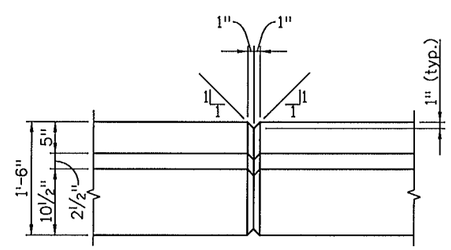

Notes:
At Contraction Joint reinforcing is continuous thru joint; concrete is monolithic thru joint.

At Expansion Joint, break bond between concrete each side of joint full height of rail; hold reinforcing back 1" from joint.

PLAN -CONTRACTION JOINT
AND EXPANSION JOINT
Space Contraction Joints at 6'-0" (max.)

Sheet Revisions		
Date:	Comments	Init.

FELSBURG HOLT & ULLEVIG
6300 South Syracuse Way Suite 600 Centennial, CO 80111
303.721.1440 fax 303.721.0832 fhu@fhueng.com

AURORA

Colorado Department of Transportation
DOT
2000 S. Holly Street
Denver, Co 80222
Phone: 303-757-9350 FAX: 303-757-9004
Region 6 RJE

As Constructed	I-225/COLFAX - PHASE 3 I-225 OVER COLFAX AVENUE BRIDGE RAIL DETAILS			Project No./Code
No Revisions:				STU 2254-082
Revised:	Designer: KMA	Structure Numbers	F-17-JK	17718
Void:	Detailer: KPS			
	Sheet Subset: BRIDGE	Subset Sheets: B21 of 38		Sheet Number 62

Revision Dates (Preliminary Stage Only)

Design			Detail			Quantities		
	INITIAL	DATE		INITIAL	DATE		INITIAL	DATE
Designed By	KMA	11/09	Detailed By	RAD	11/09	Quantities By		
Checked By			Checked By			Checked By		

soellner 9:14:39 AM L:\09004\14493\Phase 3\Bridge\Drawings\14493BRDG_PH3_F-17-JK_Colfax_BridgeRailDetails.dgn
3/15/2011 CDOT-PDFDraftQuality_XM.pltcfg

MAR. 2011 211007

Revision Dates (Preliminary Stage Only)				
5/00	5/01	4/02	3/07	

Design			Detail			Quantities		
	INITIAL	DATE		INITIAL	DATE		INITIAL	DATE
Designed By	XXX	MM/YY	Detailed By	XXX	MM/YY	Quantities By	XXX	MM/YY
Checked By	XXX	MM/YY	Checked By	XXX	MM/YY	Checked By	XXX	MM/YY

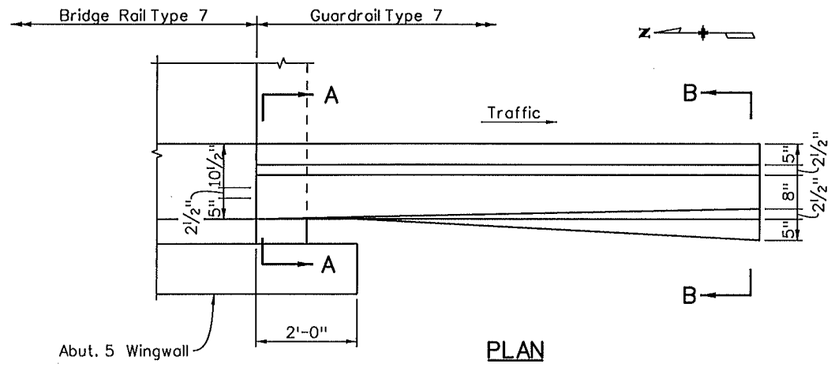

PLAN

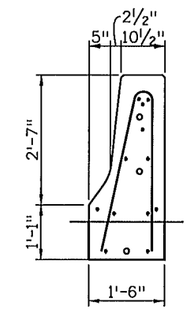

SECTION A-A

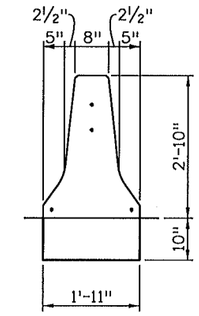

SECTION B-B

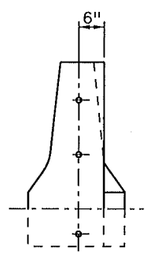

END

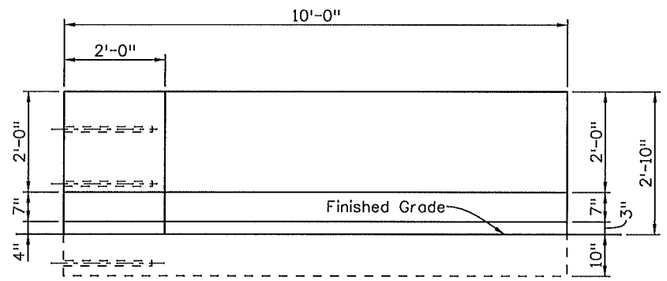

ELEVATION

BRIDGE RAIL TYPE 7 TO ROADWAY SHOULDER TYPE 7 END TRANSITION (AT ABUTMENT 5 BRIDGE WIDENING)

Measured and paid for as Guardrail Type 7.
See M-606-13 sheet 2, transition detail, for reinforcement information.

Sheet Revisions		
Date:	Comments	Init.

FELSBURG HOLT & ULLEVIG
6300 South Syracuse Way Suite 600 Centennial, CO 80111
303.721.1440 fax 303.721.0832 fhu@fhueng.com

AURORA

Colorado Department of Transportation
CDOT DEPARTMENT OF TRANSPORTATION
2000 S. Holly Street
Denver, Co 80222
Phone: 303-757-9350 FAX: 303-757-9004
Region 6 RJE

As Constructed
No Revisions:
Revised:
Void:

I-225/COLFAX - PHASE 3
I-225 OVER COLFAX AVENUE
BRIDGE RAIL TYPE 7 GUARDRAIL TRANSITION

Designer:	KMA	Structure Numbers	F-17-JK
Detailer:	KPS		
Sheet Subset:	BRIDGE	Subset Sheets:	B22 of 38

Project No./Code
STU 2254-082
17718
Sheet Number 63

soeliner 9:14:43 AM L:\09004\14493\Phase 3\Bridge\Drawings\14493BRDG_PH3_F-17-JK_Colfax_BridgeRailType7Transition.dgn
3/15/2011 CDOT-PDFDraftQuality_XM.pltcfg

MAR. 2011 211007

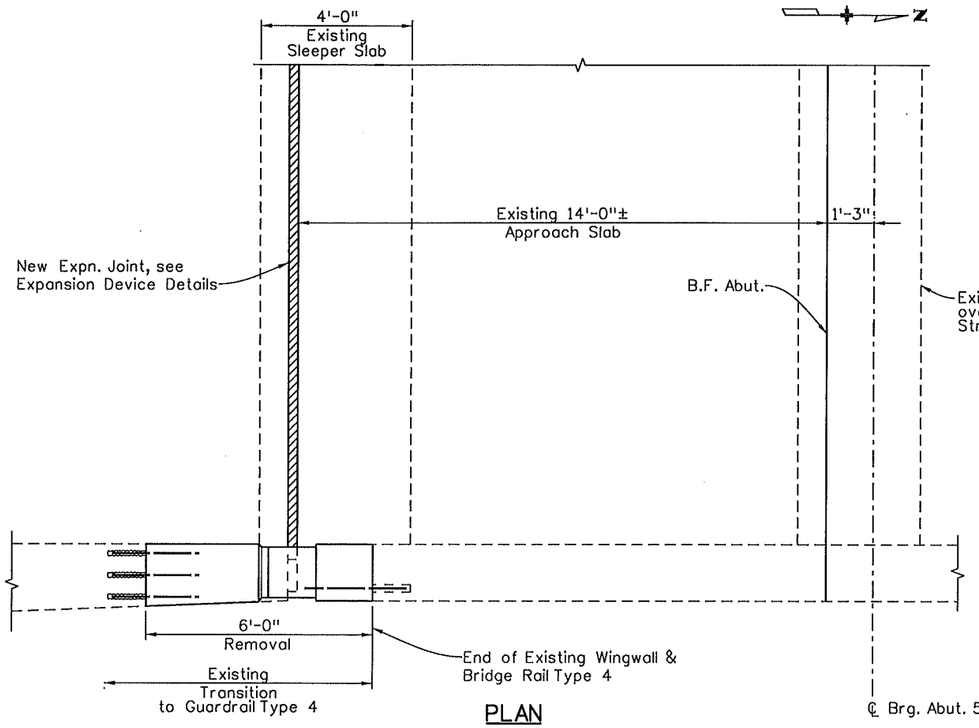

PLAN

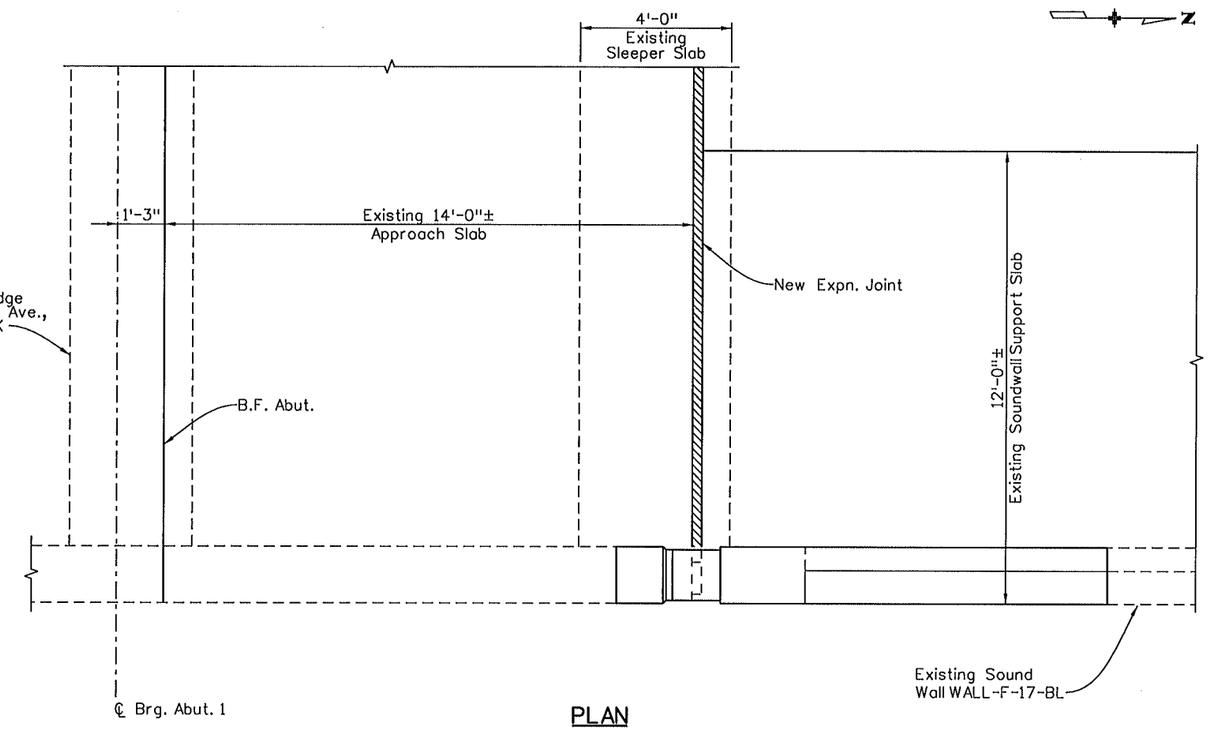

PLAN

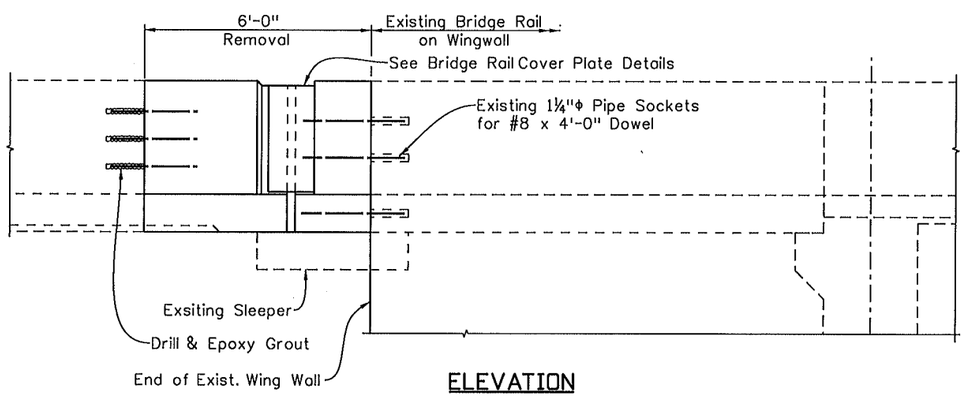

ELEVATION

SOUTHEAST CORNER

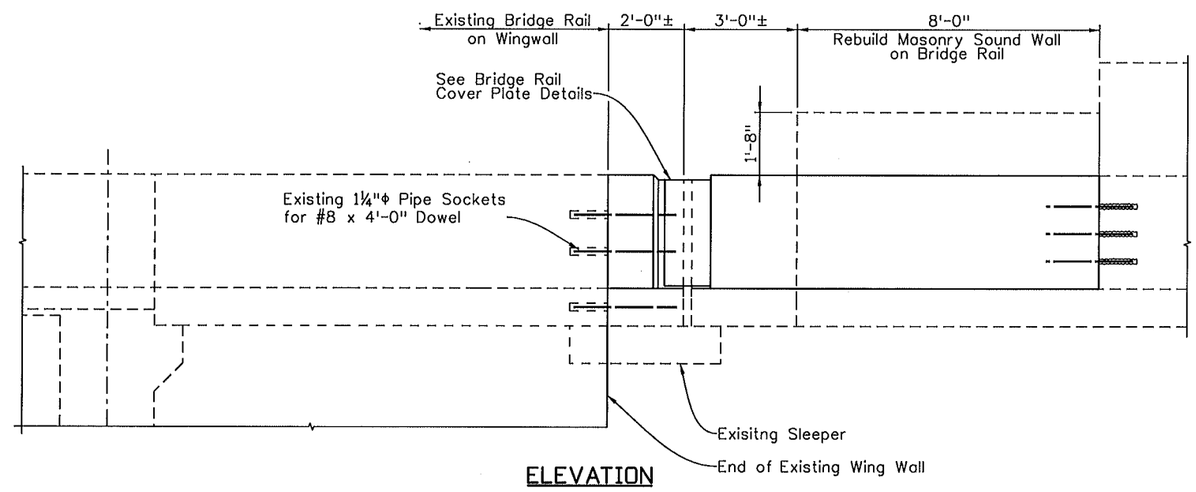

ELEVATION

NORTHEAST CORNER

Revision Dates	(Preliminary Stage Only)

Quantities			
	INITIAL	DATE	
Quantities By			
Checked By			

Detail			
	INITIAL	DATE	
Detailed By	RAD	11/09	
Checked By			

Design			
	INITIAL	DATE	
Designed By	KMA	11/09	
Checked By			

soeliner 9:14:45 AM L:\09004\14493\Phase 3\Bridge\Drawings\14493BRDG_PH3_F-17-JK_Colfax_BridgeRailMods.dgn
3/15/2011 CDOT-PDFDraftQuality_XM.pltcfg *

Sheet Revisions		
Date:	Comments	Init.

FELSBURG HOLT & ULLEVIG
6300 South Syracuse Way Suite 600 Centennial, CO 80111
303.721.1440 fax 303.721.0832 fhu@fhueng.com

AURORA

Colorado Department of Transportation
CDOT DEPARTMENT OF TRANSPORTATION
2000 S. Holly Street
Denver, Co 80222
Phone: 303-757-9350 FAX: 303-757-9004
Region 6 RJE

As Constructed	
No Revisions:	
Revised:	
Void:	

I-225/COLFAX - PHASE 3
I-225 OVER COLFAX AVENUE
EXISTING BRIDGE RAIL MODIFICATIONS

Designer:	KMA	Structure Numbers	F-17-JK
Detailer:	KPS		
Sheet Subset:	BRIDGE	Subset Sheets:	B23 of 38

Project No./Code
STU 2254-082
17718
Sheet Number 64

MAR. 2011 211007

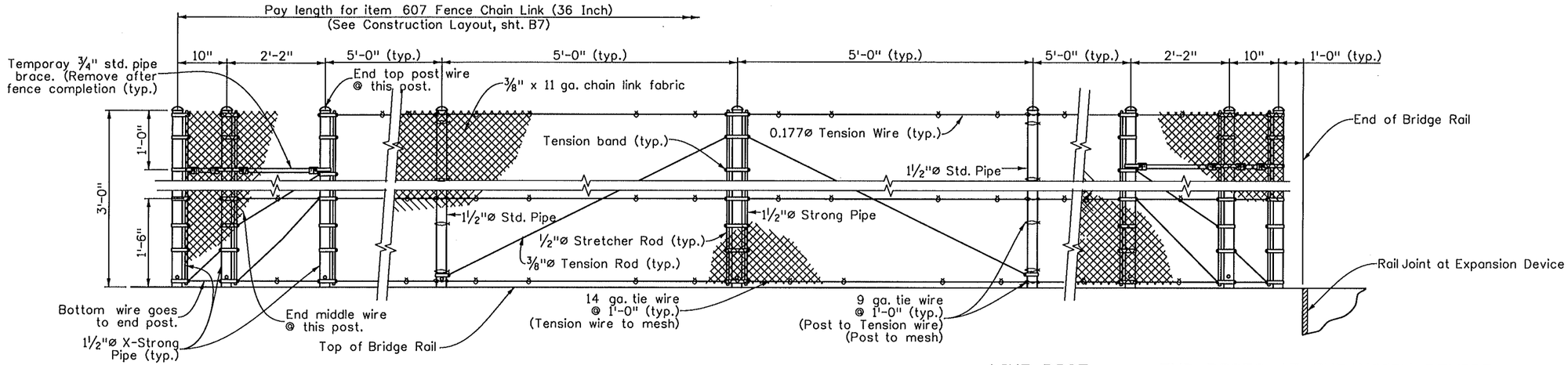

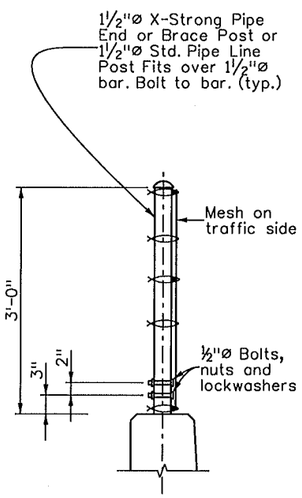

TYPICAL SECTION

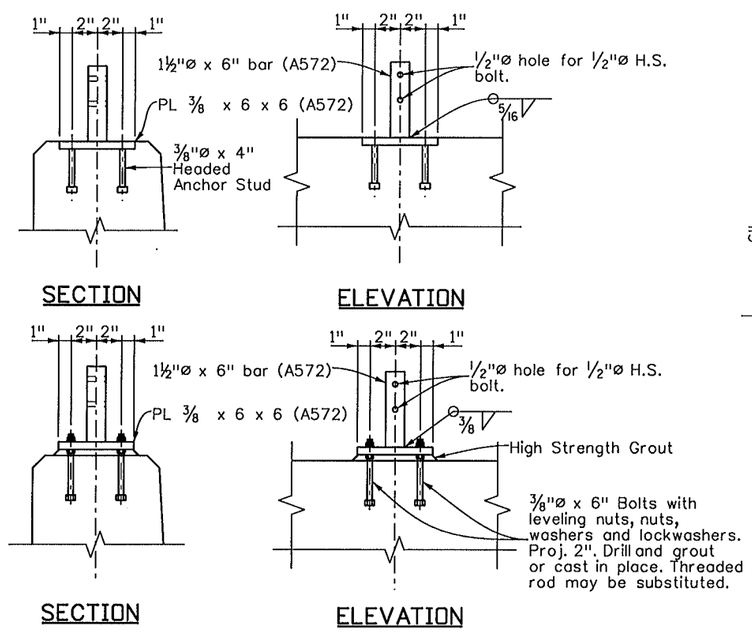

ALTERNATE ANCHORAGE DETAILS

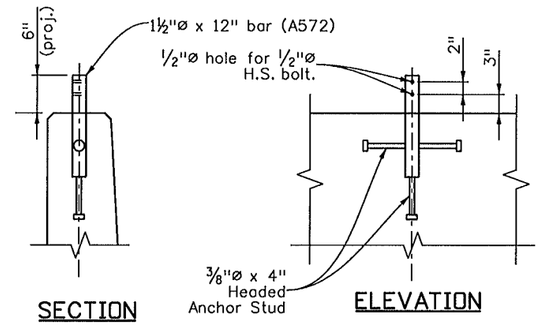

ANCHORAGE DETAIL

NOTES

Anchorage assembly shall be galvanized after fabrication. The fence assembly shallbe Galvanized and Vinyl Coated after fabrication. Anchorages shall only be galvanized after fabrication.

Tension Rods and Wires shall have turnbuckles.

Post shall be vertical.

Pipe shall conform to ASTM A53 Type E or S, Grade B.

DESIGN DATA

Total Tension = 5400 lbs
Test with: Max Midbay deflection = 1¼" for Lateral Load of 160 lbs. on 1 ft².
1'-6" up @ center of bay.

Live Load: wind load = 11 psf
or snow impact load = 96 plf @ 1'-6" up

Structural Steel: Pipe f_y = 35,000 psi
ASTM A572 (GR 50) f_y = 50,000 psi

Standard Color Vinyl Coatings over Galvanized Wire	Munsell Color System No. (as per ASTM)
Galvanized Only	None
Brown	7YR 2.4/1.75
Green	8.8G 2.63/5.8
☒ Black	1.8PB 1.26/0.5

Sheet Revisions		
Date:	Comments	Init.

0000

FELSBURG HOLT & ULLEVIG
6300 South Syracuse Way Suite 600 Centennial, CO 80111
303.721.1440 fax 303.721.0832 fhu@fhueng.com

AURORA

Colorado Department of Transportation
DOT DEPARTMENT OF TRANSPORTATION
2000 S. Holly Street
Denver, Co 80222
Phone: 303-757-9350 FAX: 303-757-9004
Region 6 RJE

As Constructed			
No Revisions:			
Revised:			
Void:			

I-225/COLFAX - PHASE 3
CHAIN LINK FENCE
(SPECIAL) (36 INCH)

Designer:	KMA	Structure Numbers	F-17-JK
Detailer:	KPS		
Sheet Subset:	BRIDGE	Subset Sheets:	B24 of 38

Project No./Code
STU 2254-082
17718
Sheet Number 65

Design							
Designed By	WJM	KMA	04/09	Detailed By	RAD	12/08	
Checked By	KMA	07/09		Checked By	WJM	06/09	

Detail				Quantities			
Detailed By	RAD	12/08		Quantities By	CAD	05/09	
Checked By	WJM	06/09		Checked By	WJM	06/09	

Revision Dates (Preliminary Stage Only)

soellner 9:14:49 AM L:\09004\14493\Phase 3\Bridge\Drawings\14493BRDG_PH3_F-17-JK_Colfax_ChainLinkFence.dgn
3/15/2011 CDOT-PDFDraftQuality_XM.pltcfg

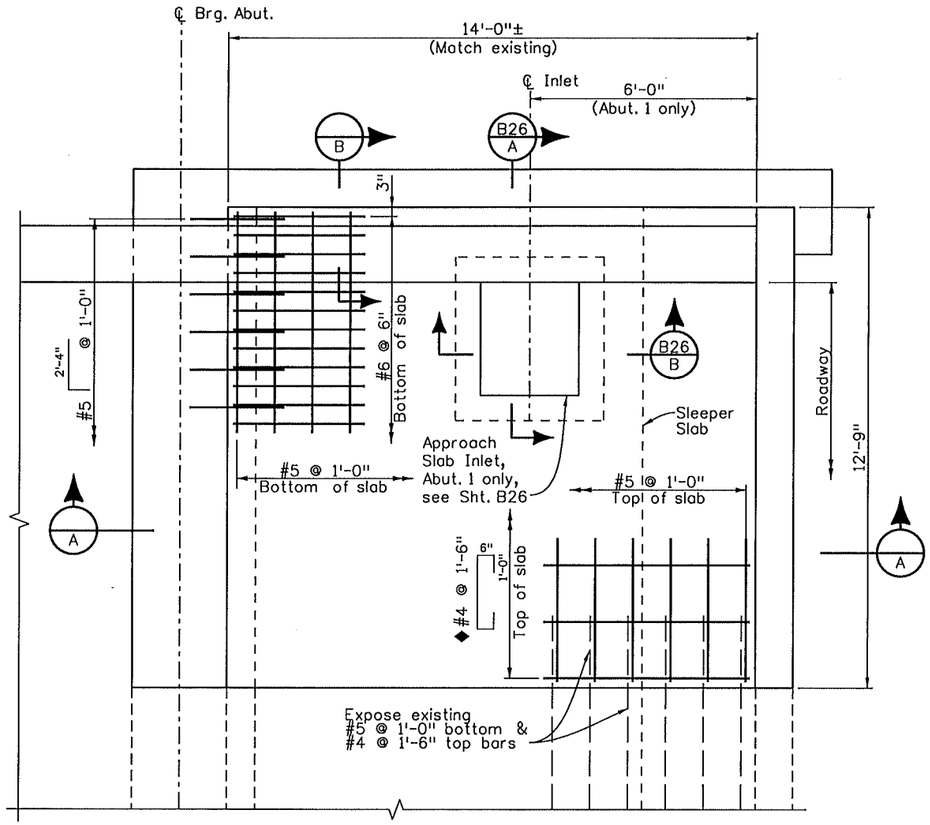

PLAN

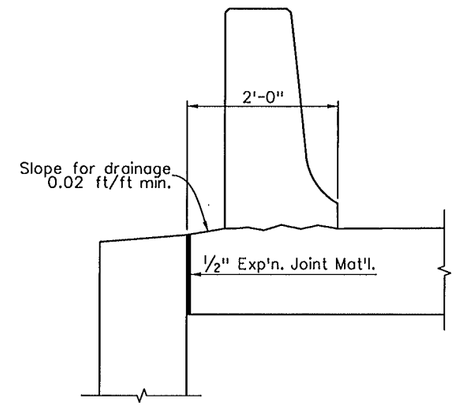

SECTION B

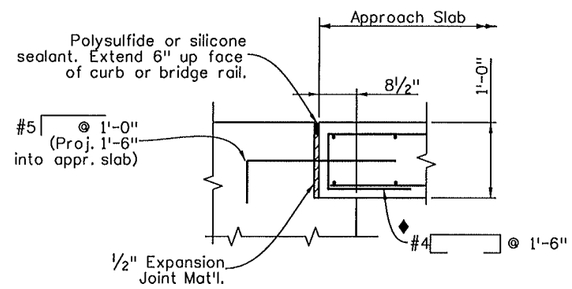

DETAIL "B"

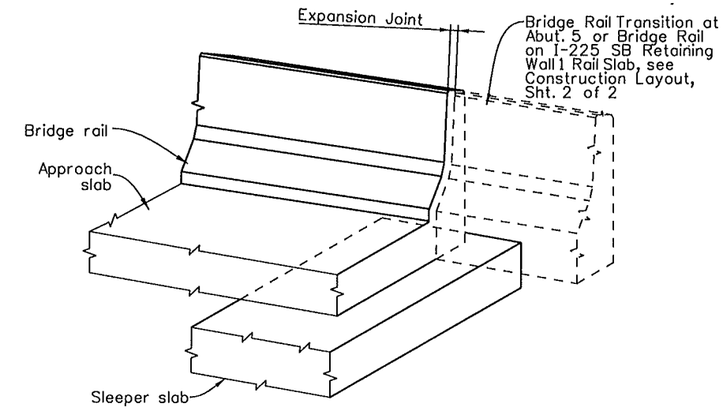

ISOMETRIC VIEW

NOTES:

1. Concrete Class H shall be used for approach slabs.
2. ½" expansion joint material shall meet AASHTO Spec. M213.
3. For expansion device details see Shts. B28 & B29.
4. For Bridge Rail details see Sht. B21.
5. Approach slab concrete shall be cured in accordance with the Specifications for Bridge Deck Concrete in Subsection 601.
6. Concrete sealer shall be applied to the bridge deck and up face of Bridge Rail to 6" above the finish grade.
7. Removal operation shall be coordinated with the engineer and performed in such a manner as to ensure the structure integrity of the approach slab.
8. The contractor shall remove all concrete debris, and expose all existing reinforcing steel. All exposed reinforcing steel shall thoroughly be cleaned, straightened and inspected by the engineer before any fresh concrete is poured.

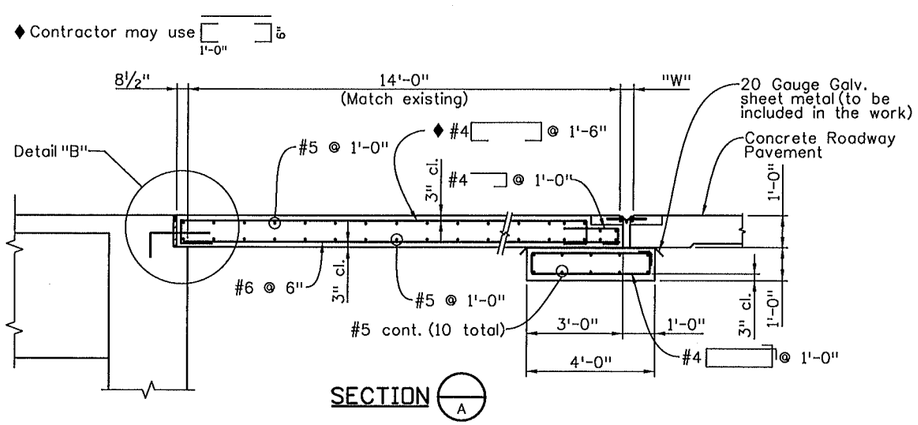

SECTION A

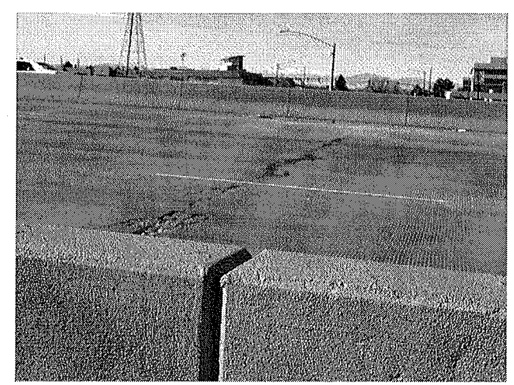

Note:
The cost for repair of this area will not be paid for separately, but shall be included in the cost of Item 518 - Bridge Expansion Device (0-4 Inch).

DAMAGED CONCRETE PAVEMENT & APPROACH SLAB EDGE

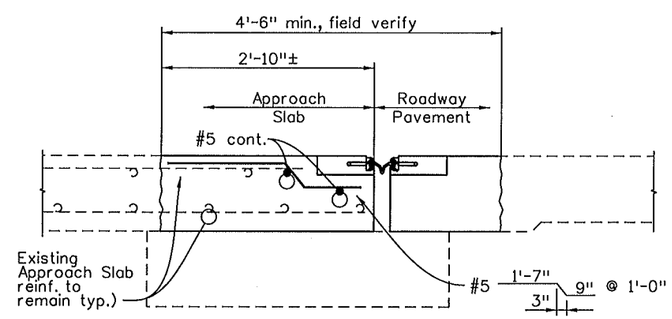

SECTION B8/C

Sheet Revisions		
Date:	Comments	Init.

FELSBURG HOLT & ULLEVIG
6300 South Syracuse Way
Suite 600
Centennial, CO 80111
303.721.1440
fax 303.721.0832
fhu@fhueng.com

AURORA

Colorado Department of Transportation
CDOT DEPARTMENT OF TRANSPORTATION
2000 S. Holly Street
Denver, Co 80222
Phone: 303-757-9350 FAX: 303-757-9004
Region 6 RJE

As Constructed	I-225/COLFAX - PHASE 3 I-225 OVER COLFAX AVENUE APPROACH SLAB DETAILS			Project No./Code
No Revisions:				STU 2254-082
Revised:	Designer: KMA/GWB	Structure Numbers	F-17-JK	17718
Void:	Detailer: KPS			
	Sheet Subset: BRIDGE	Subset Sheets: B25 of 38		Sheet Number 66

Design			Detail			Quantities		
	INITIAL	DATE		INITIAL	DATE		INITIAL	DATE
Designed By	KMA	11/09	Detailed By	RAO	11/09	Quantities By		
Checked By			Checked By			Checked By		

Revision Dates (Preliminary Stage Only)

MAR. 2011 211007

66

soeliner 9:14:53 AM L:\09004\14493\Phase 3\Bridge\Drawings\14493BRDG_PH3_F-17-JK_Colfax_AppSlab01.dgn
3/15/2011 CDOT-PDFDraftQuality_XM.pltcfg *

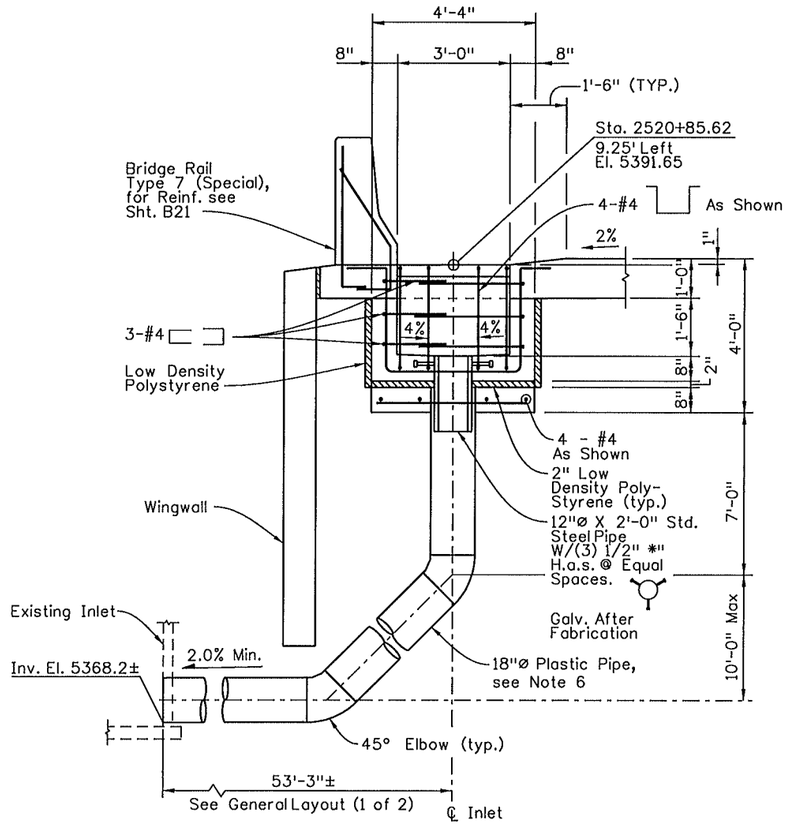

PERPENDICULAR TO BRIDGE RAIL

SECTION B25/A

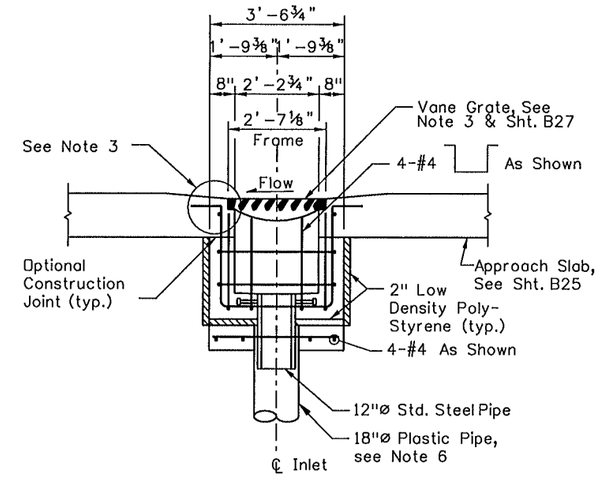

SECTION B25/8

NOTES:

1. Cut approach slab reinforcing as required for inlet opening. Paint cut ends of epoxy coated reinforcing with an approved coating.
2. Concrete shall be Class H.
3. Provide inlet grate as shown on Sheet B27. Provide anchor bolts as shown on the Grate Installation Detail.
4. Grate to be installed during construction of inlet box with the vane grate bolted in place to the frame. The cost of the grate, grate frame, expn. joint material, expanded polystyrene and steel pipe shall be included in the work.
5. For Grate & Frame Details, See Sheet B27.
6. Plastic pipe shall conform to the requirements of C905. Plastic pipe shall be joined for watertight coupling as recommended by the pipe supplier or as approved by the Engineer. All joints shall be mechanically restrained to prevent separation.
7. The cost of elbows, hardware, and all miscellaneous items required to install the inlet shall not be paid for separately, but shall be included in the Item 603, 18"ø Plastic Pipe.
8. Concrete and reinforcing steel quantities are included with Approach Slab quantities.

Sheet Revisions		
Date:	Comments	Init.

FELSBURG HOLT & ULLEVIG
6300 South Syracuse Way Suite 600 Centennial, CO 80111
303.721.1440 fax 303.721.0832 fhu@fhueng.com

Colorado Department of Transportation
2000 S. Holly Street
Denver, Co 80222
Phone: 303-757-9350 FAX: 303-757-9004
Region 6 RJE

As Constructed				
No Revisions:	I-225/COLFAX - PHASE 3 I-225 OVER COLFAX AVENUE APPR. SLAB INLET DETAILS (1 OF 2)			Project No./Code
Revised:	Designer: KMA	Structure Numbers	F-17-JK	STU 2254-082
	Detailer: KPS			17718
Void:	Sheet Subset: BRIDGE	Subset Sheets: B26 of 38		Sheet Number 67

Revision Dates					
MM/YY					

(Preliminary Stage Only)

MAR. 2011 211007

Quantities		
	INITIAL	DATE
Quantities By	XXX	MM/YY
Checked By	XXX	MM/YY

Detail		
	INITIAL	DATE
Detailed By	KJS	06/09
Checked By	CAD	08/09

Design		
	INITIAL	DATE
Designed By	XXX	MM/YY
Checked By	XXX	MM/YY

soeliner 9:14:57 AM L:\09004\14493\Phase 3\Bridge\Drawings\14493BRDG_PH3_F-17-JK_Colfax_AppSlabInlet01.dgn
3/15/2011 CDOT-PDFDraftQuality_XM.pltcfg *

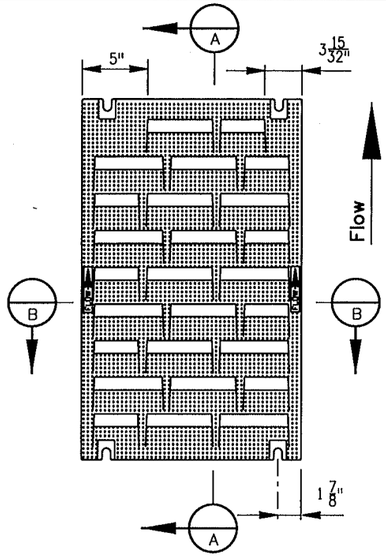

PLAN-GRATE DETAIL

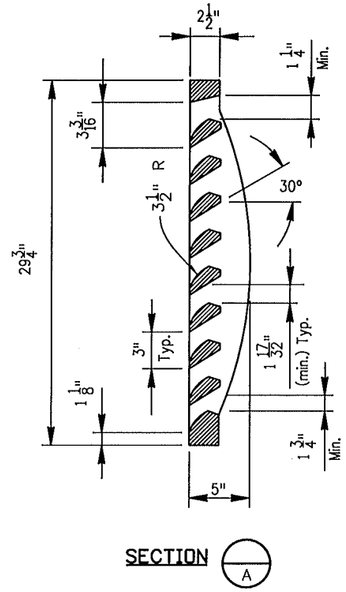

SECTION (A)

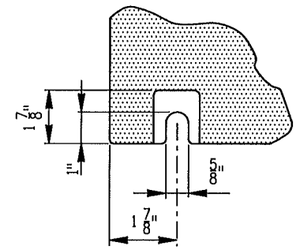

BOLT SLOT DETAIL
Typ. Corner

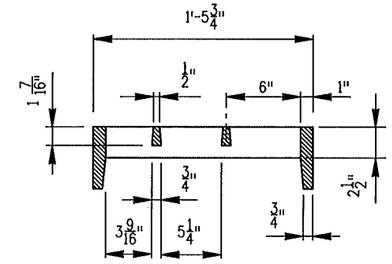

END SECTION (B)

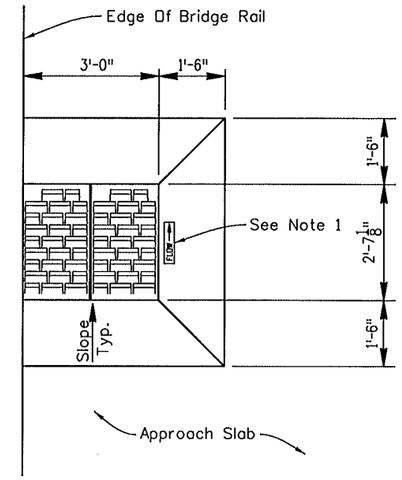

GRATE AND FRAME SPECIFICATIONS

Free Open Area: 1.31 Ft^2
Material: Cast Gray Iron, Class 35, ASTM A48-83, AASHTO M105-82
Finish: No Paint
Weight: Grate 173 Lb/each; Frame 29 Lb/each

Note:
The Contractor Shall Stamp Flow Arrow Into The Top Surface Of The Apron To Indicate The Direction Of Flow. These Stamped Arrows Shall Be 6" Long, 1" High And 3/8" Deep.

TYPICAL VANE GRATE INLET APRON

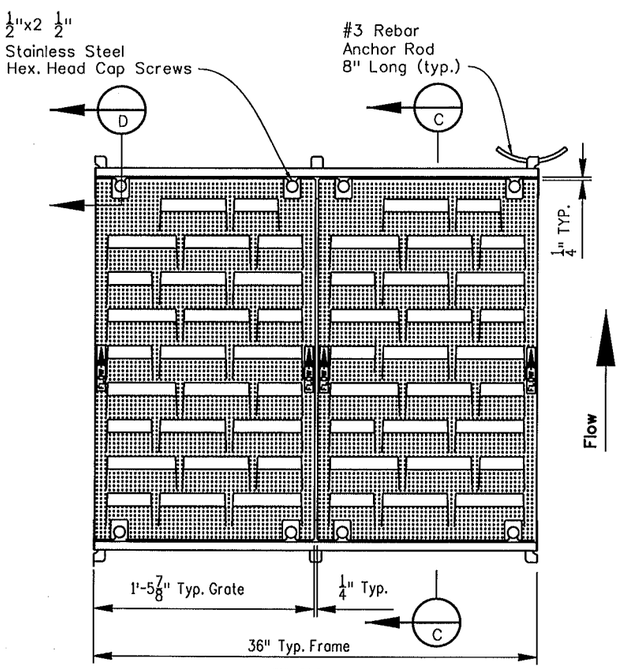

PLAN

MULTIPLE GRATE WITH FRAME

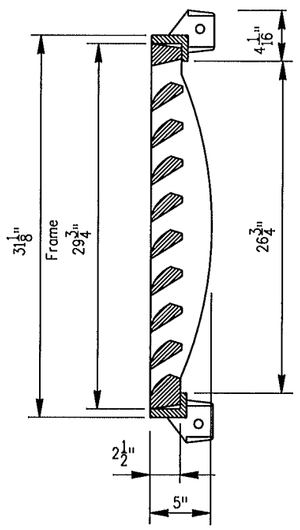

SECTION (C)

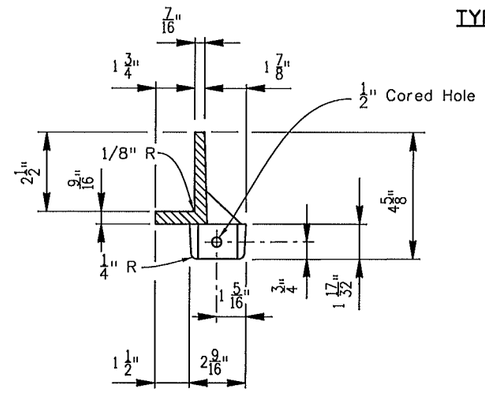

SECTION THRU FRAME

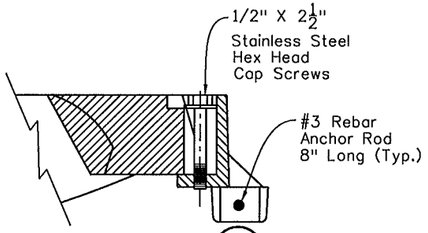

SECTION (D)

Sheet Revisions		
Date:	Comments	Init.

FELSBURG HOLT & ULLEVIG
6300 South Syracuse Way Suite 600 Centennial, CO 80111
303.721.1440 fax 303.721.0832 fhu@fhueng.com

AURORA

Colorado Department of Transportation
2000 S. Holly Street
Denver, Co 80222
Phone: 303-757-9350 FAX: 303-757-9004
Region 6
RJE

As Constructed	I-225/COLFAX - PHASE 3 I-225 OVER COLFAX AVENUE APPR. SLAB INLET DETAILS (2 OF 2)			Project No./Code
No Revisions:				STU 2254-082
Revised:	Designer: KMA	Structure Numbers	F-17-JK	17718
	Detailer: KPS			
Void:	Sheet Subset: BRIDGE	Subset Sheets: B27 of 38		Sheet Number 68

Design			Detail			Quantities		
	INITIAL	DATE		INITIAL	DATE		INITIAL	DATE
Designed By	XXX	MM/YY	Detailed By	KJS	05/09	Quantities By	XXX	MM/YY
Checked By	XXX	MM/YY	Checked By	CAG	08/09	Checked By	XXX	MM/YY

Revision Dates MM/YY (Preliminary Stage Only)

MAR. 2011 211007

68

soellner 9:15:03 AM L:\09004\14493\Phase 3\Bridge\Drawings\14493BRDG_PH3_F-17-JK_Colfax_AppSlabInlet02.dgn
3/15/2011 CDOT-PDFDraftQuality_XM.pltcfg *

REV. MAR. 2011 211007

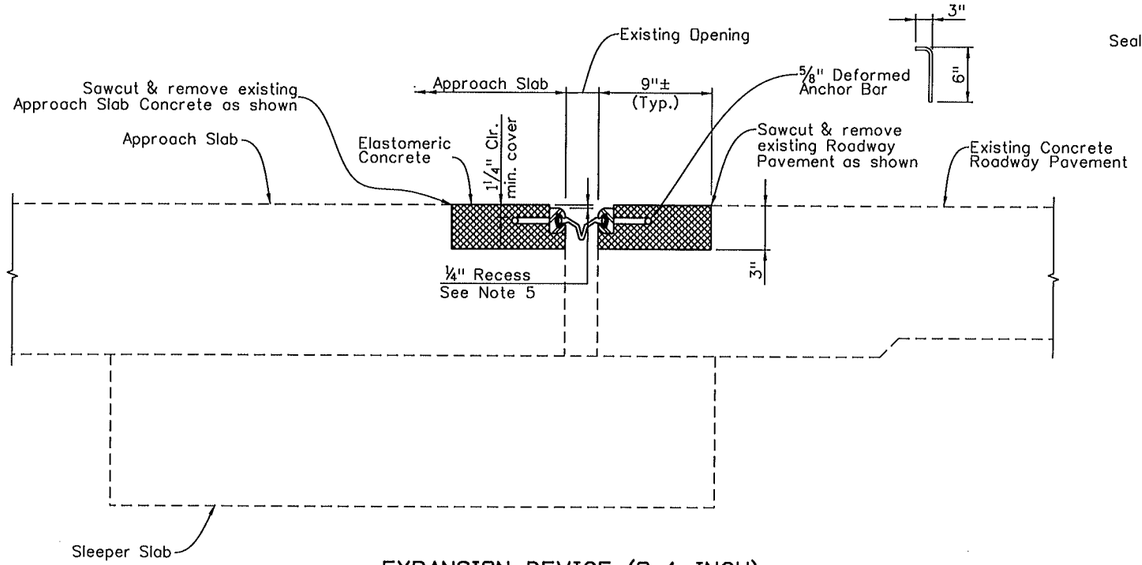

EXPANSION DEVICE (0-4 INCH)
SECTION AT EXISTING APPROACH SLAB (B8/A)

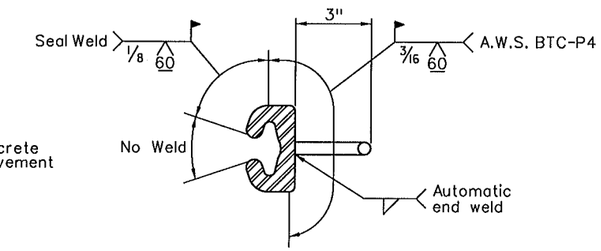

RAIL FIELD SPLICE DETAIL

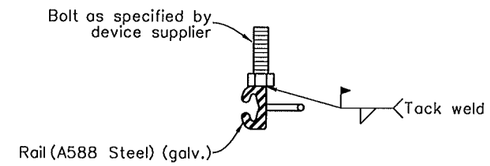

SUGGESTED SPREADER BRACKET BOLT DETAIL

NOTES:

The expansion device shall be installed on grade, parallel to the slope and grade of the deck.

After the elastomeric concrete has attained initial set, the attachments used to hold the expansion device assembly in the proper position shall be removed.

The steel rail/extrusion shall be AASHTO M22(A588).

"A" and "W" dimensions are dependent upon the particular expansion device supplied, and shall be shown on the working drawings.

See table for dimensions "A" and "W"; interpolate as needed. Do not install the gland until dimension "A" has opened up to at least 1½". Use section 518.10(b) in the Standard Specifications to determine the structure temperature.

The neoprene gland shall be installed in one piece in accordance with section 518 of the Standard Specifications.

See section 518 in the Standard Specifications for water tight integrity testing requirements.

ACCEPTABLE EXPANSION DEVICE ALTERNATES

(R-1)
D.S. Brown A2R400-SSA2 with Delcrete
WABO SE400 Type A with WABOcrete
Epoxy Industries S400-A with CEVAcrete

NOTES:

1. Provide expansion device support as recommended by Expansion Device supplier, at 6'-0" intervals.
2. For reinforcing see Approach Slab Details.
3. Remove spreader bracket bolts and bead board for finished joint.
4. Elastomeric concrete shall be placed after expansion device has been adjusted to proper grade and approved by the Engineer.
5. The Contractor shall provide ¼" recess for the entire length of the steel rails.
6. The Contractor shall remove and thoroughly clean the concrete roadway pavement in the impacted area, as directed by the engineer, from all asphalt overlay, concrete debris, oil, grease, and other foreign material that would prevent proper installation and bonding of the elastomeric concrete to the concrete pavement.

SUGGESTED REPAIR SEQUENCE

Full time presence of a manufacturer's representative is required during the installation of the expansion device and placement of the elastomeric concrete.

1. Remove old joint material and other debris as required. Sandblast all surfaces to come into contact with elastomeric concrete (including the strip seal rails) to remove any laitance which may affect the bond of the elastomeric concrete.
2. Set strip seal rails to grade and elevation using spreader brackets and adjust to proper opening. Place duct tape over groove of strip seal rails and place bead board or styrofoam between the rails. Place duct tape on the top to cover the bead board and rails. Place duct tape adjacent to joint on top of finish grade surface. Seal any areas that may allow elastomeric concrete to leak from blackout.
3. Place elastomeric concrete as directed by the manufacturer's representative.
4. Remove spreader brackets and bolts. Then remove duct tape and bead board as directed by the manufacturer's representative.

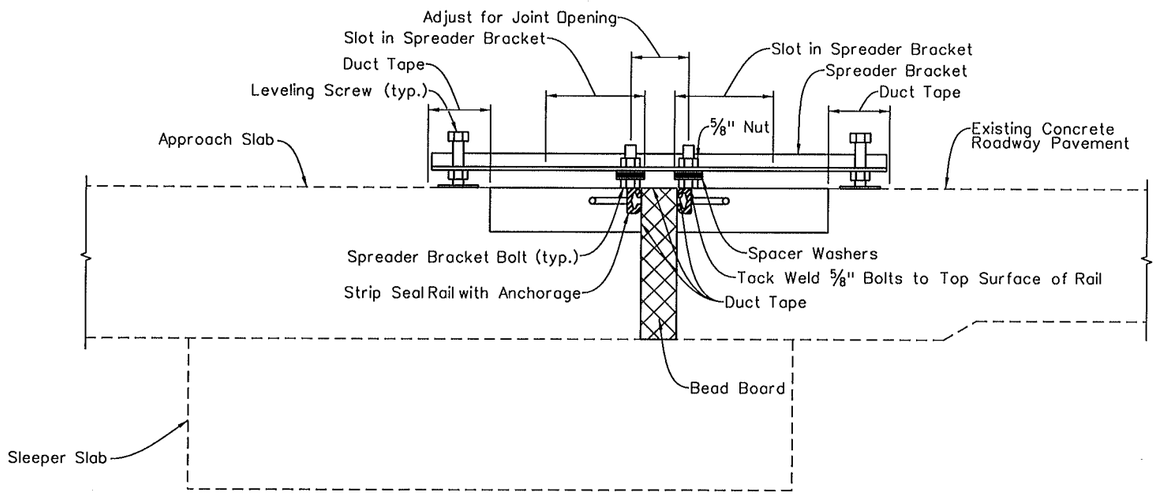

SUGGESTED MINIMUM SUPPORT BRACKET REQUIREMENTS
SECTION AT EXISTING APPROACH SLAB

Str. Temp	"A"	"W"*
-30° F	3½"	6"
0° F	3"	5½"
30° F	2¾"	5¼"
60° F	2½"	5"
90° F	2¼"	4¾"
120° F	2"	4½"

*For E = 1¼" (min.)

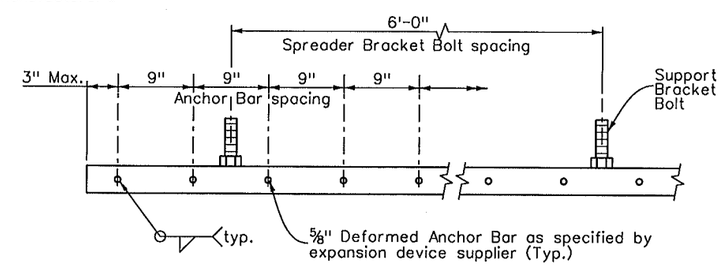

ANCHOR BAR SPACING

Sheet Revisions		
Date:	Comments	Init.
05-02-11	Expn. Device Clarification	GWB

FELSBURG HOLT & ULLEVIG
6300 South Syracuse Way, Suite 600, Centennial, CO 80111
303.721.1440 fax 303.721.0832 fhu@fhueng.com

AURORA

Colorado Department of Transportation
CDOT DEPARTMENT OF TRANSPORTATION
2000 S. Holly Street
Denver, Co 80222
Phone: 303-757-9350 FAX: 303-757-9004
Region 6 RJE

As Constructed
No Revisions:
Revised:
Void:

I-225/COLFAX - PHASE 3
I-225 OVER COLFAX AVENUE
EXPANSION DEVICE DETAILS (1 OF 2)

Designer:	KMA/GWB	Structure Numbers	F-17-JK
Detailer:	RAD		
Sheet Subset:	BRIDGE	Subset Sheets:	B28 of 38

Project No./Code
STU 2254-082
17718
Sheet Number 69

Design			Detail			Quantities		
Designed By	INITIAL	DATE	Detailed By	INITIAL	DATE	Quantities By	INITIAL	DATE
KMA	11/09		RAD		11/09			
Checked By			Checked By			Checked By		

Revision Dates (Preliminary Stage Only)

Ricdli 1:25:00 PM L:\09004\14493\Phase 3\Bridge\Drawings\14493BRDG_PH3_F-17-JK_Colfax_ExpnDev01.dgn
4/26/2011 CDOT-PDFDraftQuality_XM.pltcfg CDOT-PenTable.tbl

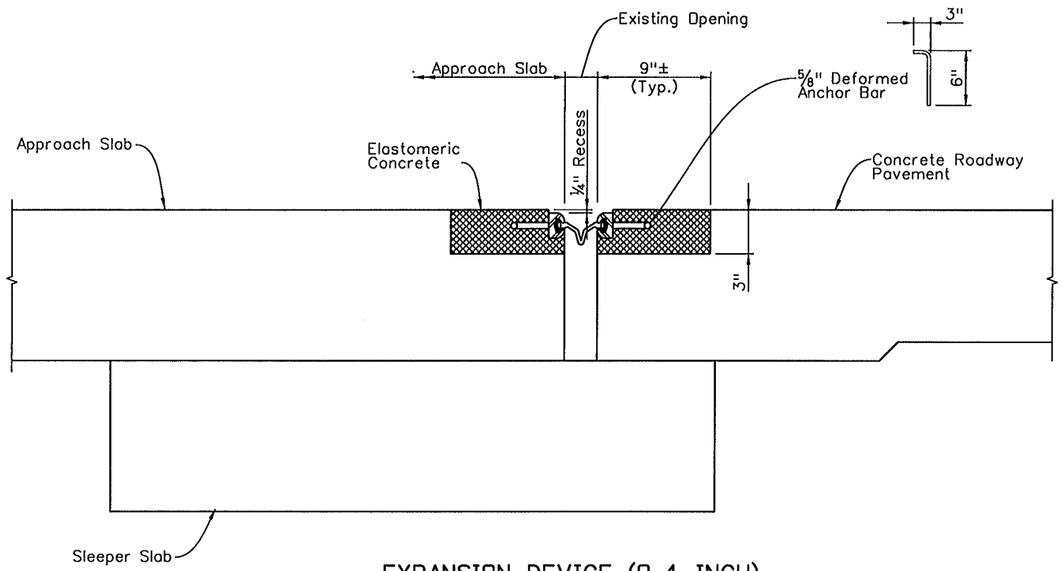

EXPANSION DEVICE (0-4 INCH)

SECTION AT NEW APPROACH SLAB (B8/B)

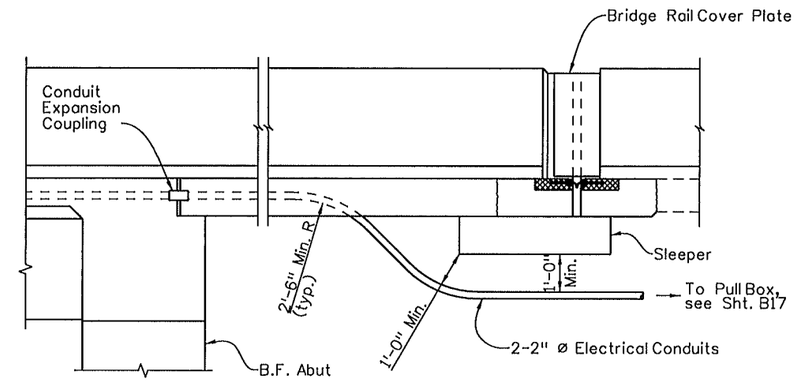

CONDUIT EXIT DETAIL

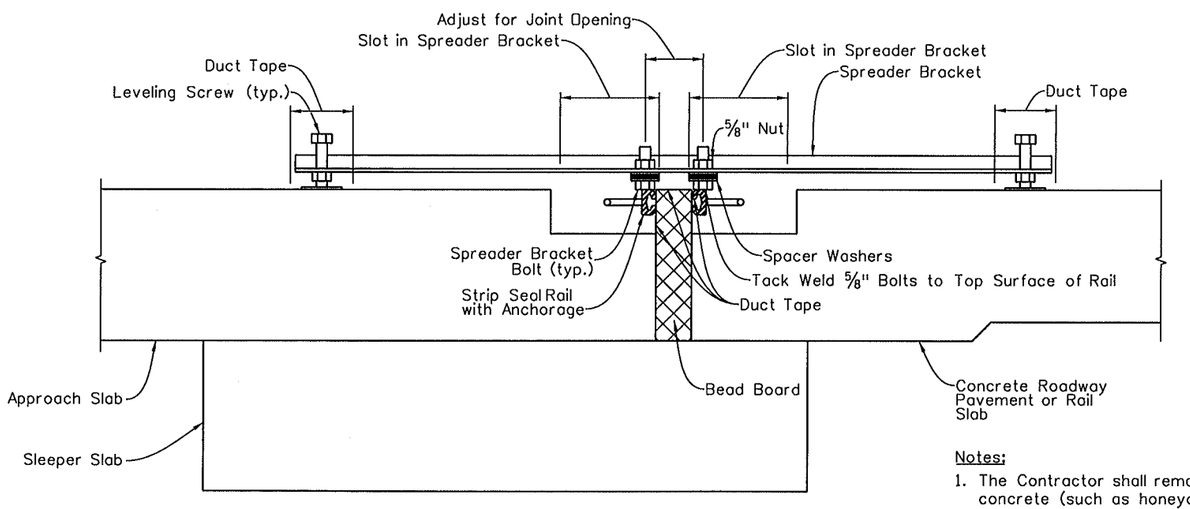

MINIMUM SUPPORT BRACKET REQUIREMENTS

SECTION AT NEW APPROACH SLAB

Notes:

1. The Contractor shall remove all unsound concrete (such as honeycombs), and clean thoroughly, as directed by the Engineer, prior to placing the elastomeric concrete.
2. See Sht. B28 for installation requirements.

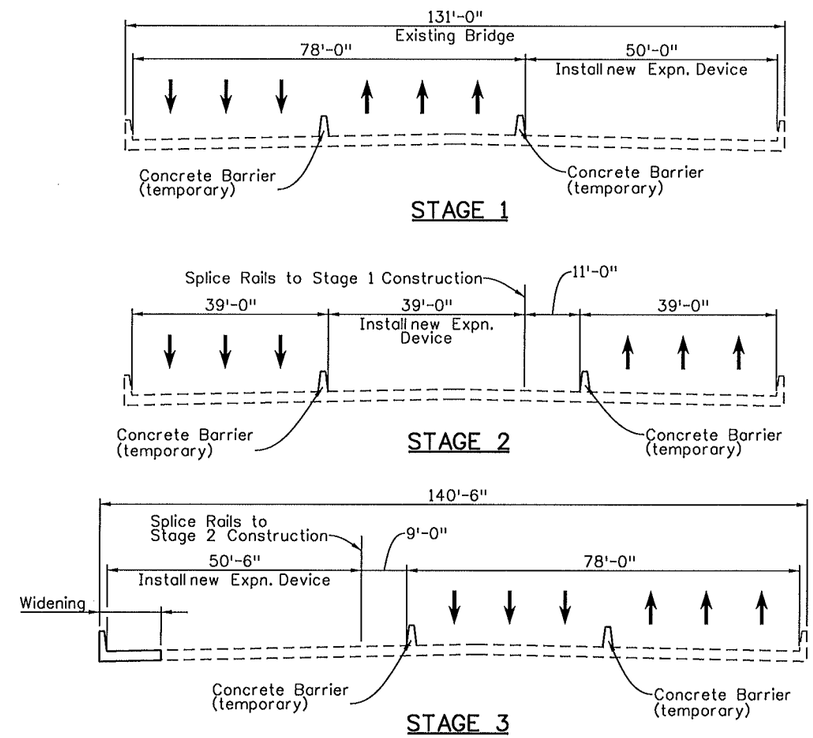

EXPANSION DEVICE REPLACEMENT SEQUENCE

(Looking North)

Sheet Revisions		
Date:	Comments	Init.

FELSBURG HOLT & ULLEVIG
6300 South Syracuse Way Suite 600 Centennial, CO 80111
303.721.1440 fax 303.721.0832 fhu@fhueng.com

AURORA

Colorado Department of Transportation
CDOT DEPARTMENT OF TRANSPORTATION
2000 S. Holly Street
Denver, Co 80222
Phone: 303-757-9350 FAX: 303-757-9004
Region 6 RJE

As Constructed			
No Revisions:			
Revised:			
Void:			

I-225/COLFAX - PHASE 3
I-225 OVER COLFAX AVENUE
EXPANSION DEVICE DETAILS (2 OF 2)

Designer:	KMA/GWB	Structure Numbers	F-17-JK
Detailer:	RAD		
Sheet Subset:	BRIDGE	Subset Sheets:	B29 of 38

Project No./Code
STU 2254-082
17718
Sheet Number 70

Revision Dates (Preliminary Stage Only)

Design						Detail						Quantities		
Designed By	KMA	INITIAL	DATE	Detailed By	RAD	INITIAL	DATE	Quantities By		INITIAL	DATE			
Checked By		11/09		Checked By		RAD	11/09	Checked By						

70

MAR. 2011 211007

sceliner 9:15:35 AM L:\09004\14493\Phase 3\Bridge\Drawings\14493BRDG_Ph3_F-17-JK_Colfax_ExpnDev02.dgn
3/15/2011 CDOT-PDFDraftQuality_XM.pltcfg *

MAR. 2011 211007

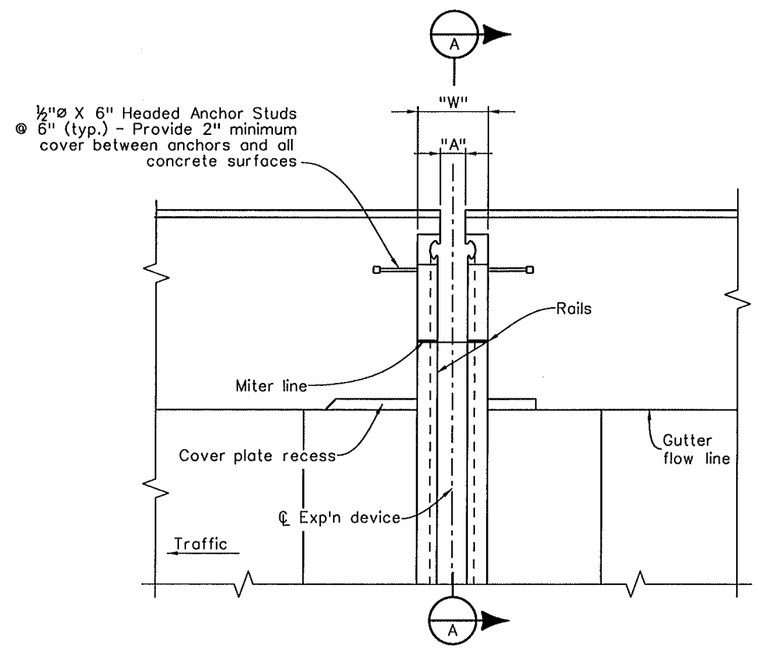

PLAN

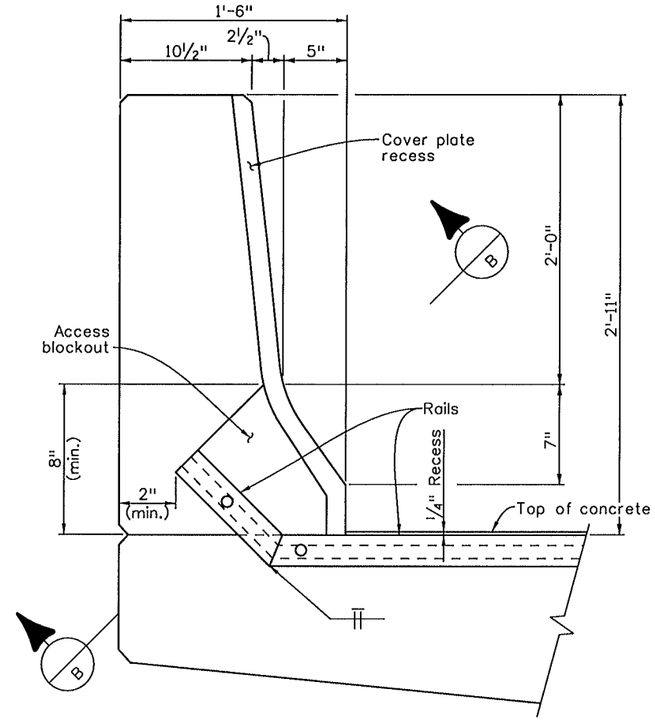

BRIDGE RAIL TYPE 7 SECTION (A)
(At Bridge Widening)

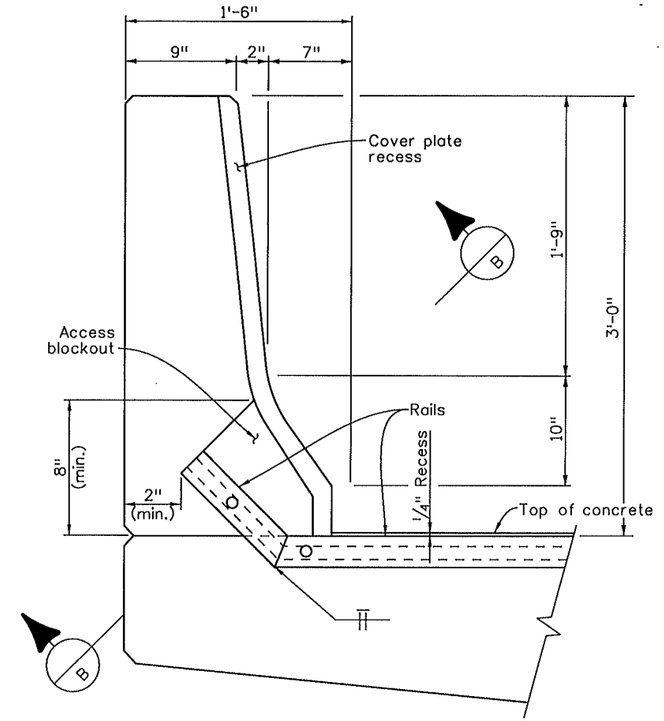

BRIDGE RAIL TYPE 4 SECTION (A)
(Southeast & Northeast corners, see Sht. B8)

BRIDGE RAIL TYPE 4 OR TYPE 7 DETAILS
(Cover plate not shown for clarity)

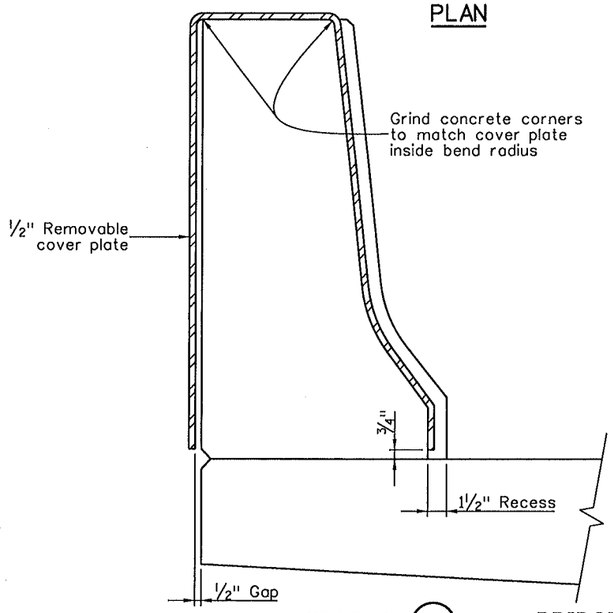

SECTION (C)

BRIDGE RAIL TYPE 4 OR TYPE 7 COVER PLATE DETAILS
(Galvanize after fabrication)

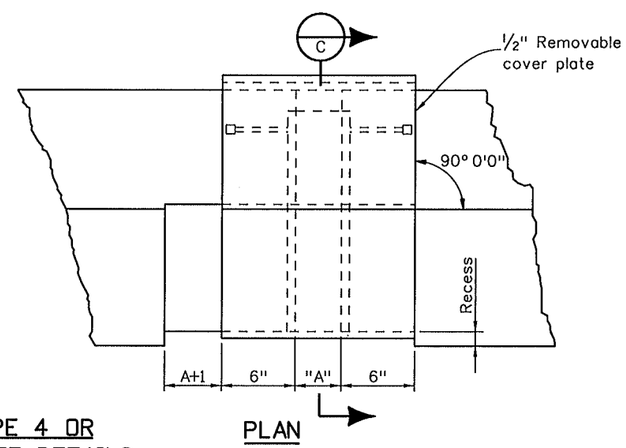

PLAN

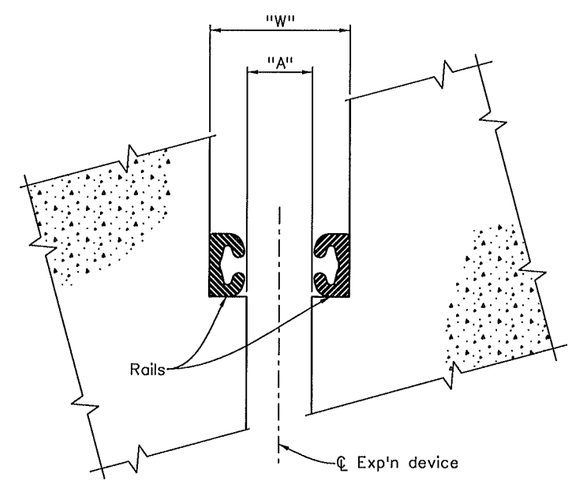

SECTION (B)

Revision Dates	(Preliminary Stage Only)

Quantities			
	INITIAL	DATE	
Quantities By			
Checked By			

Detail			
	INITIAL	DATE	
Detailed By	RAD	11/09	
Checked By			

Design			
	INITIAL	DATE	
Designed By	KMA	11/09	
Checked By			

soeliner 9:15:37 AM L:\09004\14493\Phase 3\Bridge\Drawings\14493BRDG_PH3_F-17-JK_Colfax_CoverPlate01.dgn
3/15/2011 CDOT-PDFDraftQuality_XM.pltcfg

Sheet Revisions		
Date:	Comments	Init.

FELSBURG HOLT & ULLEVIG
6300 South Syracuse Way Suite 600 Centennial, CO 80111
303.721.1440 fax 303.721.0832 fhu@fhueng.com

AURORA

Colorado Department of Transportation
CDOT DEPARTMENT OF TRANSPORTATION
2000 S. Holly Street
Denver, Co 80222
Phone: 303-757-9350 FAX: 303-757-9004
Region 6 RJE

As Constructed
No Revisions:
Revised:
Void:

I-225/COLFAX - PHASE 3
I-225 OVER COLFAX AVENUE
BRIDGE RAIL COVER PLATE DETAILS

Designer:	KMA	Structure Numbers	F-17-JK
Detailer:	RAD		
Sheet Subset:	BRIDGE	Subset Sheets:	B30 of 38

Project No./Code
STU 2254-082
17718
Sheet Number 71

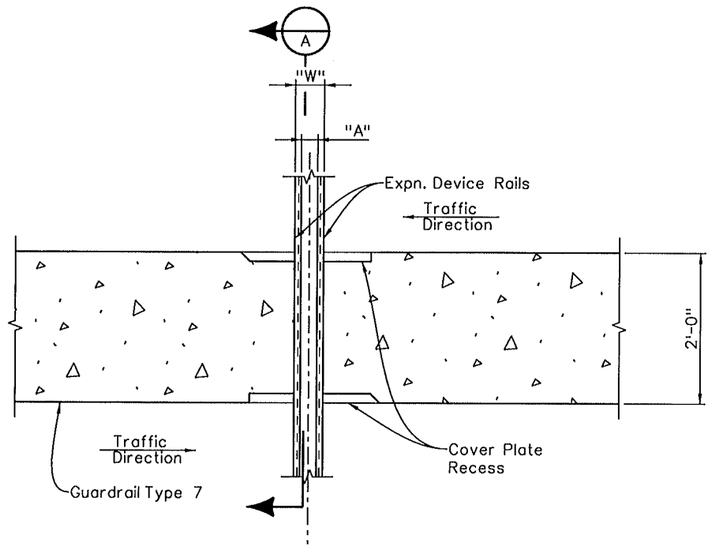

PLAN

Notes:

1. Cover Plate steel shall be AASHTO M 270 (ASTM A 709) Grade 36
2. Cover Plate shall be galvanized after fabrication.
3. The cost of the Cover Plate shall not be paid for separately, but shall be included in Item 518 - Bridge Expansion Device (0-4 Inch).
4. For Expansion Device (0-4in.) "W" & "A" dimensions, see Sht. B28.

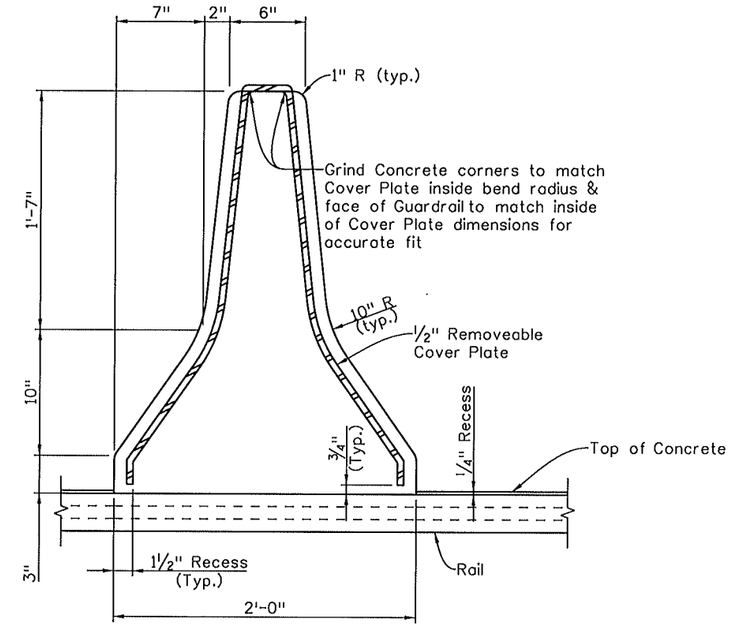

SECTION A

R-1

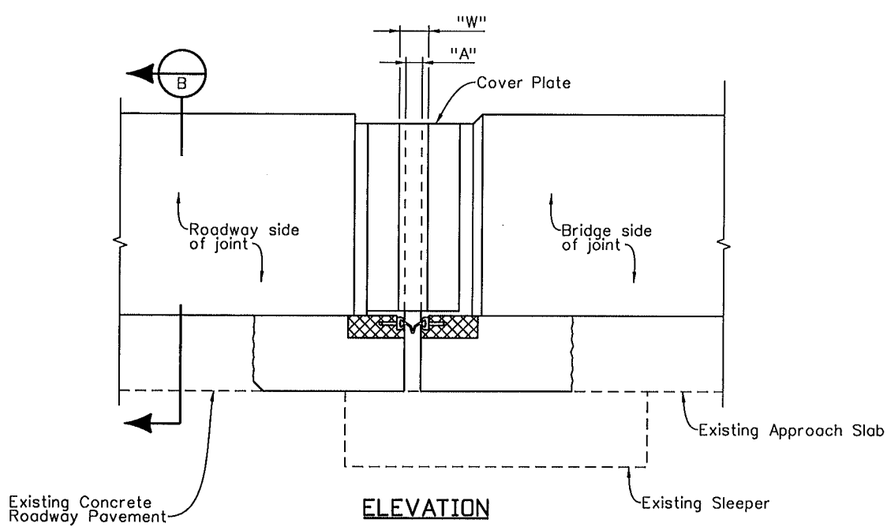

ELEVATION

MEDIAN GUARDRAIL TYPE 7
AT EXPANSION DEVICE

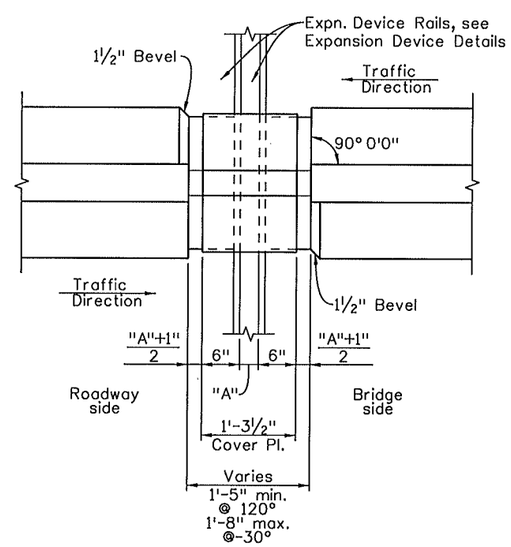

COVER PLATE PLAN

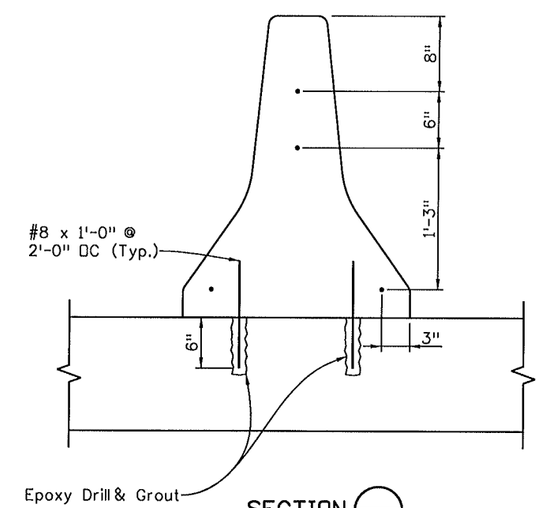

SECTION B

Sheet Revisions		
Date:	Comments	Init.
05-02-11	Miscellaneous Revisions	GWB

R-1

FELSBURG HOLT & ULLEVIG
6300 South Syracuse Way Suite 600 Centennial, CO 80111
303.721.1440 fax 303.721.0832 fhu@fhueng.com

AURORA

Colorado Department of Transportation
CDOT DEPARTMENT OF TRANSPORTATION
2000 S. Holly Street
Denver, Co 80222
Phone: 303-757-9350 FAX: 303-757-9004
Region 6 RJE

As Constructed
No Revisions:
Revised:
Void:

I-225/COLFAX - PHASE 3
I-225 OVER COLFAX AVENUE
MEDIAN GUARDRAIL COVER PLATE DETAILS

Designer:	KMA/GWB	Structure Numbers	F-17-JK
Detailer:	KPS		
Sheet Subset:	BRIDGE	Subset Sheets:	B31 of 38

Project No./Code
STU 2254-082
17718
Sheet Number 72

Ricdl 2:43:21 PM L:\09004\14493\Phase 3\Bridge\Drawings\14493BRDG_PH3_F-17-JK_Colfax_CoverPlate02.dgn
4/27/2011 CDOT-PDFDraftQuality_XM.pltcfg CDOT-PenTable.tbl

MAR. 2011 211007

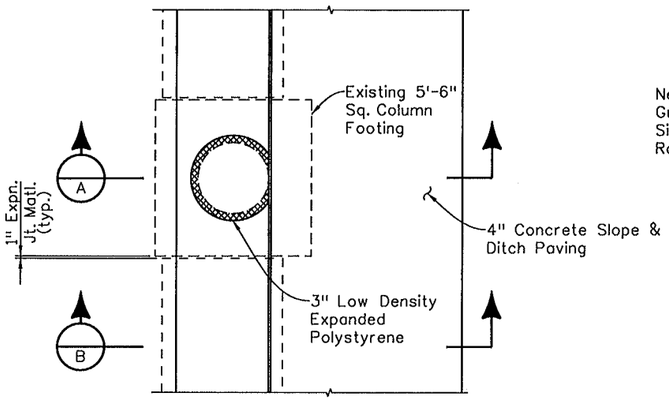

PLAN AT INTERIOR PIER COLUMN

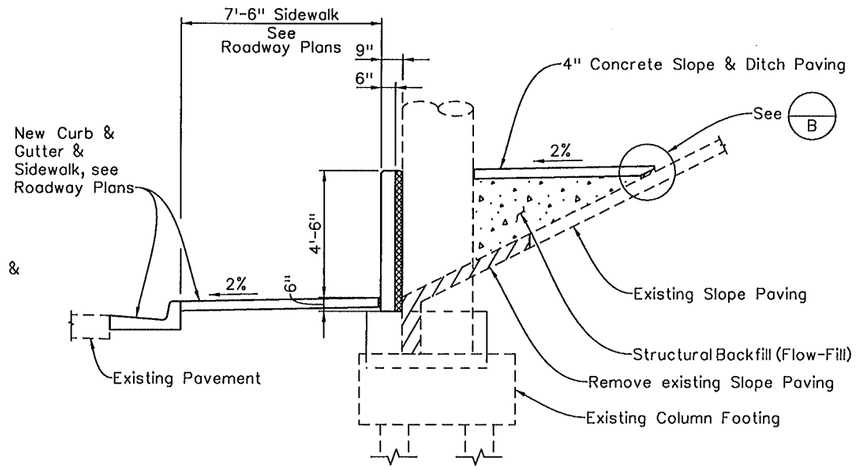

SECTION A

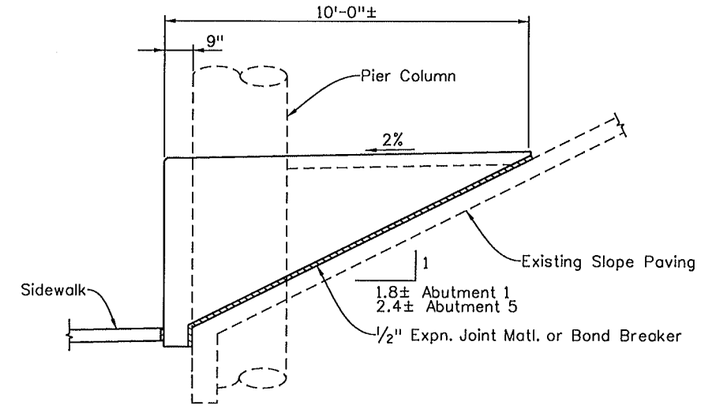

END CLOSURE WALL C

Notes:

1. The Cost of the Pier 2 & 4 Guardrail shall be paid for under Items 601 - Concrete Class D (Bridge) & 602 - Reinforcing Steel (Epoxy-Coated).
2. Guardrail Concrete and Epoxy Reinforcing Steel shall conform to the requirements of Sections 601 and 602.
3. Concrete cover shall be 2" unless noted otherwise.
4. Expansion Joint Material will not be paid for separately, but shll be included in the cost of Item 601 - Concrete Class D (Bridge).

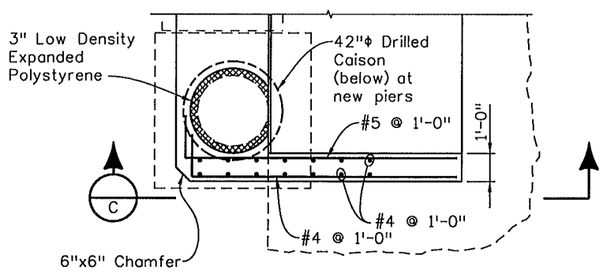

PLAN AT EXTERIOR PIER COLUMN

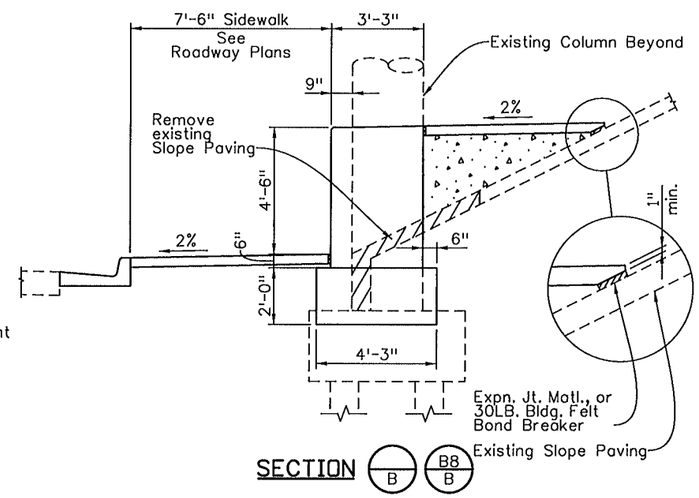

SECTION B B8/B

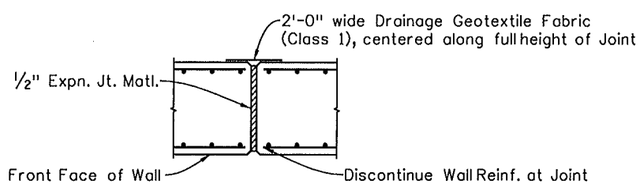

EXPANSION JOINT

(Center between Pier Columns, see Sht B8 for location)

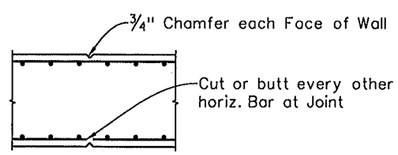

CONTROL JOINT

(Center between Pier Columns, see Sht B8 for locations)

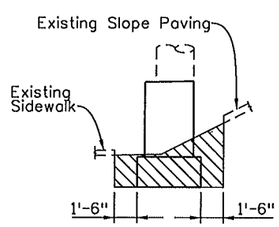

EXCAVATION

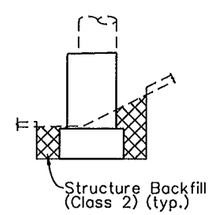

BACKFILL

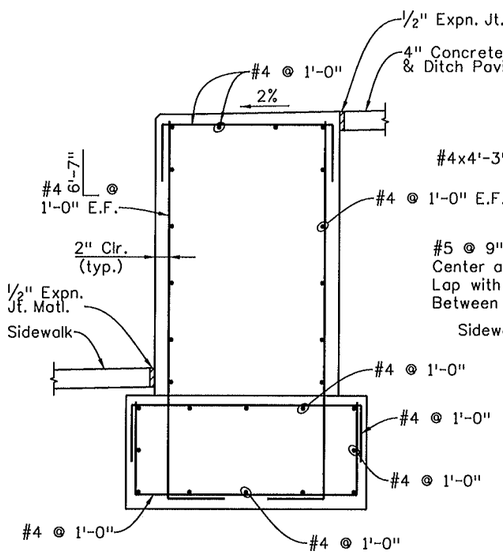

REINFORCING BETWEEN COLUMNS

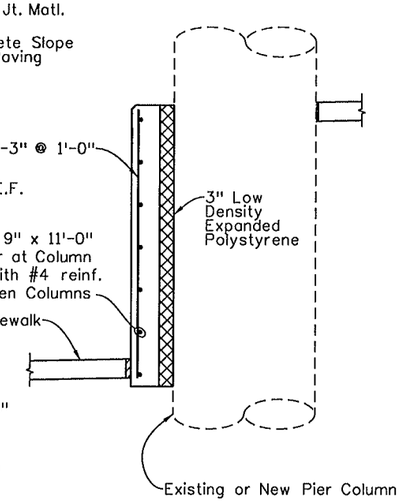

REINFORCING AT COLUMNS

Revision Dates (Preliminary Stage Only)

Quantities			
	INITIAL	DATE	
Quantities By			
Checked By			

Detail			
	INITIAL	DATE	
Detailed By	RAD	11/09	
Checked By			

Design			
	INITIAL	DATE	
Designed By	KMA	11/09	
Checked By			

soeliner 9:15:44 AM L:\09004\14493\Phase 3\Bridge\Drawings\14493BRDG_PH3_F-17-JK_Colfax_Guardrail01.dgn
3/15/2011 CDOT-PDFDraftQuality_XM.pltcfg *

Sheet Revisions		
Date:	Comments	Init.

FELSBURG HOLT & ULLEVIG
6300 South Syracuse Way
Suite 600
Centennial, CO 80111
303.721.1440
fax 303.721.0832
fhu@fhueng.com

AURORA

Colorado Department of Transportation
CDOT DEPARTMENT OF TRANSPORTATION
2000 S. Holly Street
Denver, Co 80222
Phone: 303-757-9350 FAX: 303-757-9004
Region 6 RJE

As Constructed	I-225/COLFAX - PHASE 3 I-225 OVER COLFAX AVENUE PIER 2 & 4 GUARDRAIL DETAILS			Project No./Code
No Revisions:				STU 2254-082
Revised:	Designer: KMA	Structure Numbers	F-17-JK	17718
	Detailer: RAD			
Void:	Sheet Subset: BRIDGE	Subset Sheets: B32 of 38		Sheet Number 73

MAR. 2011 211007

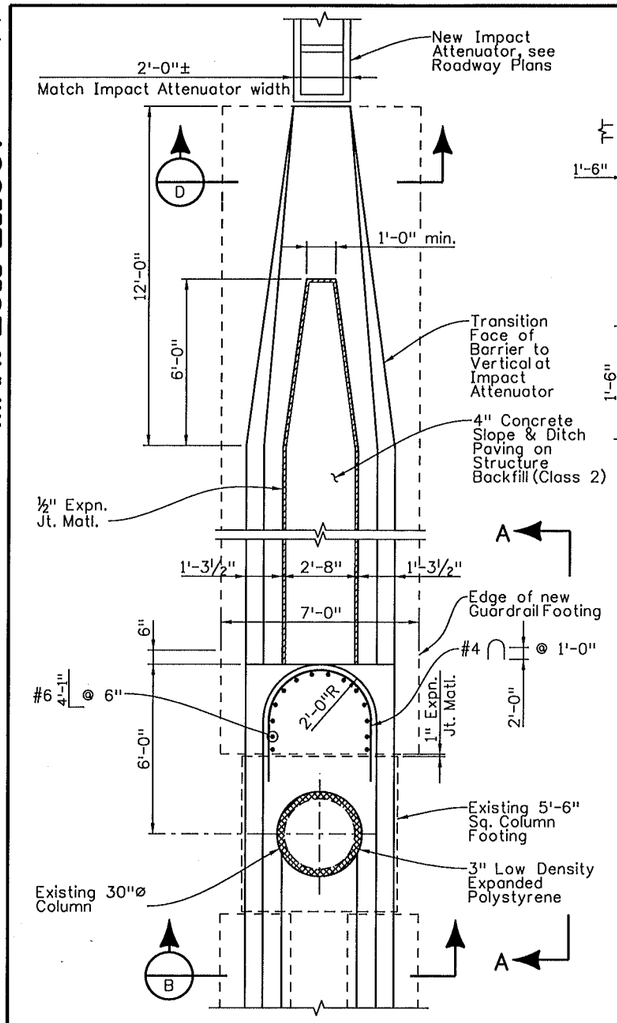

PLAN
EAST END AT NEW IMPACT ATTENUATOR

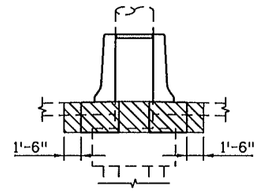

EXCAVATION

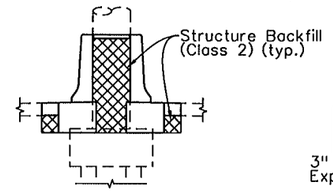

BACKFILL

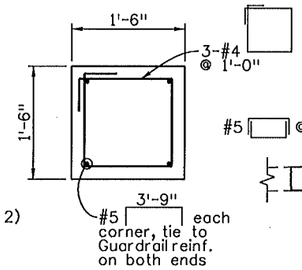

SECTION C

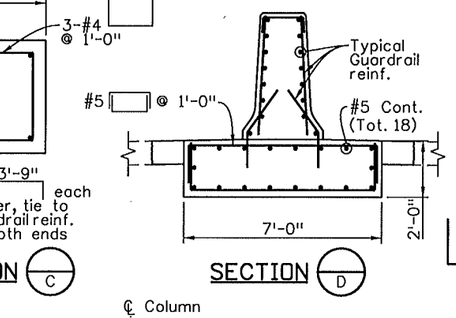

SECTION D

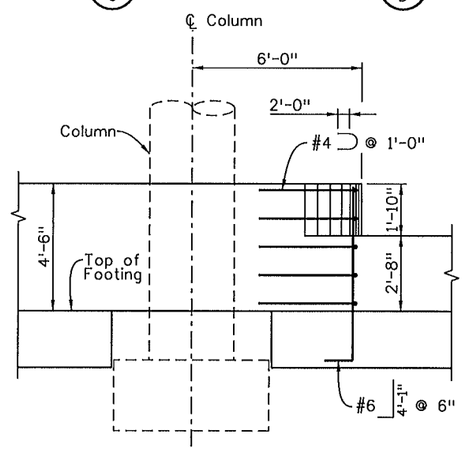

VIEW A-A

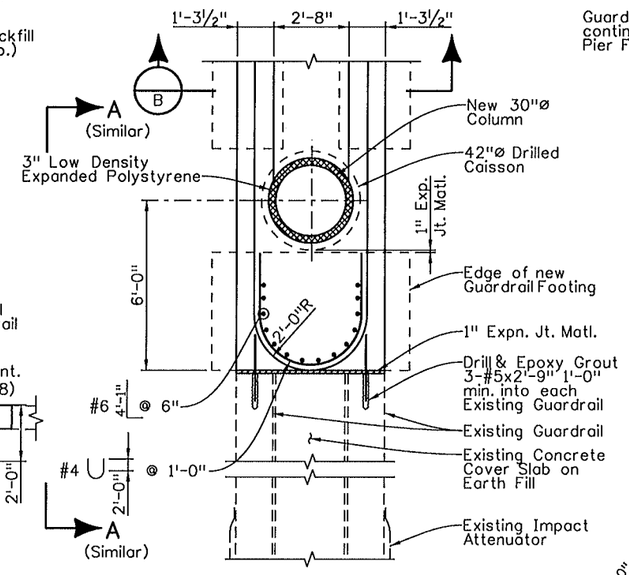

PLAN
WEST END AT EXISTING IMPACT ATTENUATOR

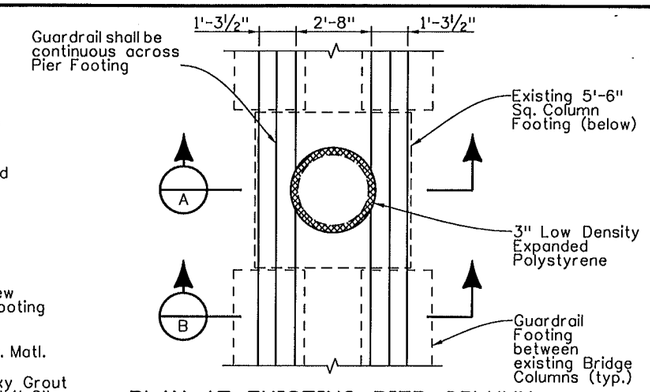

PLAN AT EXISTING PIER COLUMN

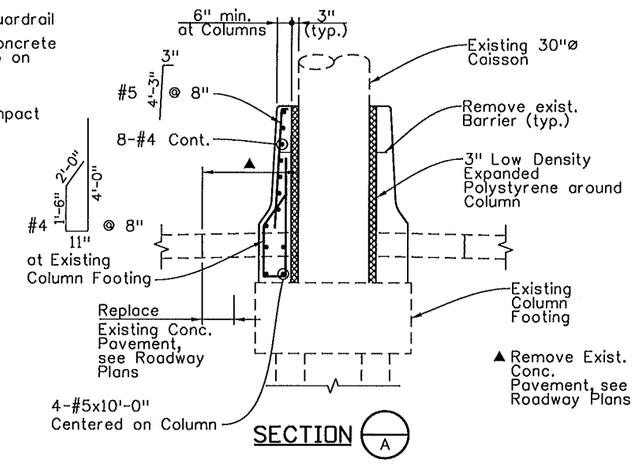

SECTION A

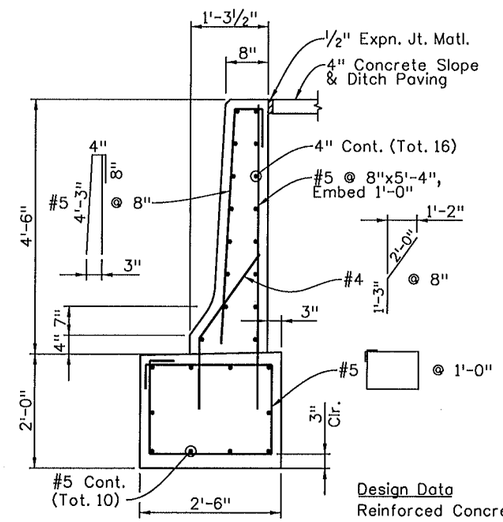

TYPICAL GUARDRAIL SECTION BETWEEN PIER COLUMNS

Design Data
Reinforced Concrete:
Class D Concrete F'c = 4,500 PSI
Reinforcing Steel Fy = 60,000 PSI

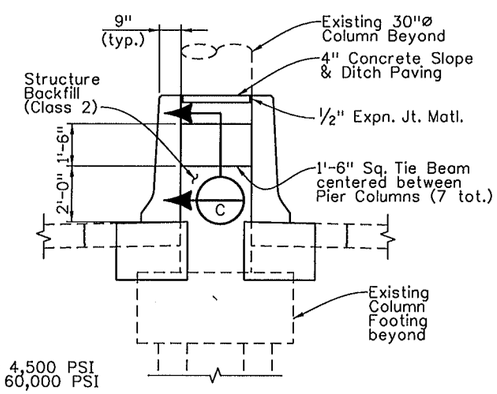

SECTION B B8/B

Notes:

1. Payment for all concrete and reinforcing steel to construct the Guardrails, Footings and Tie Beams as detailed on this sheet shall be made under Item 606 - Guardrail (Special).
2. All Guardrail Concrete shall be Class D.
3. Guardrail Concrete and Epoxy Reinforcing Steel shall conform to the requirements of Sections 601 and 602.
4. The surface of the rail shall be tested with a 10 foot straight edge laid along the surface in the longitudinal direction. Deviation of the concrete surface from the straight edge shall be less than ¼" plus allowance for roadway horizontal and vertical curvature, if any.
5. Concrete cover shall be 2" unless noted otherwise.
6. Guardrail shall be constructed plumb.
7. Expansion Joint Material will not be paid for separately, but shall be included in the cost of Item 606 - Guardrail (Special).

Sheet Revisions		
Date:	Comments	Init.

FELSBURG HOLT & ULLEVIG
6300 South Syracuse Way Suite 600 Centennial, CO 80111
303.721.1440 fax 303.721.0832 fhu@fhueng.com

AURORA

Colorado Department of Transportation
DOT
2000 S. Holly Street
Denver, Co 80222
Phone: 303-757-9350 FAX: 303-757-9004
Region 6 RJE

As Constructed			
No Revisions:			
Revised:			
Void:			

I-225/COLFAX - PHASE 3
I-225 OVER COLFAX AVENUE
PIER 3 GUARDRAIL DETAILS

Designer:	KMA/GWB	Structure Numbers	F-17-JK
Detailer:	RAD		
Sheet Subset:	BRIDGE	Subset Sheets:	B33 of 38

Project No./Code
STU 2254-082
17718
Sheet Number 74

Quantities			
Detail	INITIAL	DATE	
Detailed By	RAD	11/09	
Checked By			
Quantities By			
Checked By			

Design	INITIAL	DATE
Designed By	KMA	11/09
Checked By		

Revision Dates (Preliminary Stage Only)

soeliner 9:15:48 AM L:\09004\14493\Phase 3\Bridge\Drawings\14493BRDG_PH3_F-17-JK_Colfax_Guardrail02.dgn
3/15/2011 CDOT-PDFDraftQuality_KM.pltcfg

MAR. 2011 211007

Revision Dates (Preliminary Stage Only)

Quantities			
	INITIAL	DATE	
Quantities By			
Checked By			

Detail			
	INITIAL	DATE	
Detailed By	RAD	11/09	
Checked By			

Design			
	INITIAL	DATE	
Designed By	KMA	11/09	
Checked By			

soellner 9:15:52 AM L:\09004\14493\Phase 3\Bridge\Drawings\14493BROG_PH3_F-17-JK_Colfax_SlopePaving.dgn
3/15/2011 CDOT-PDFDraftQuality_XM.pltcfg

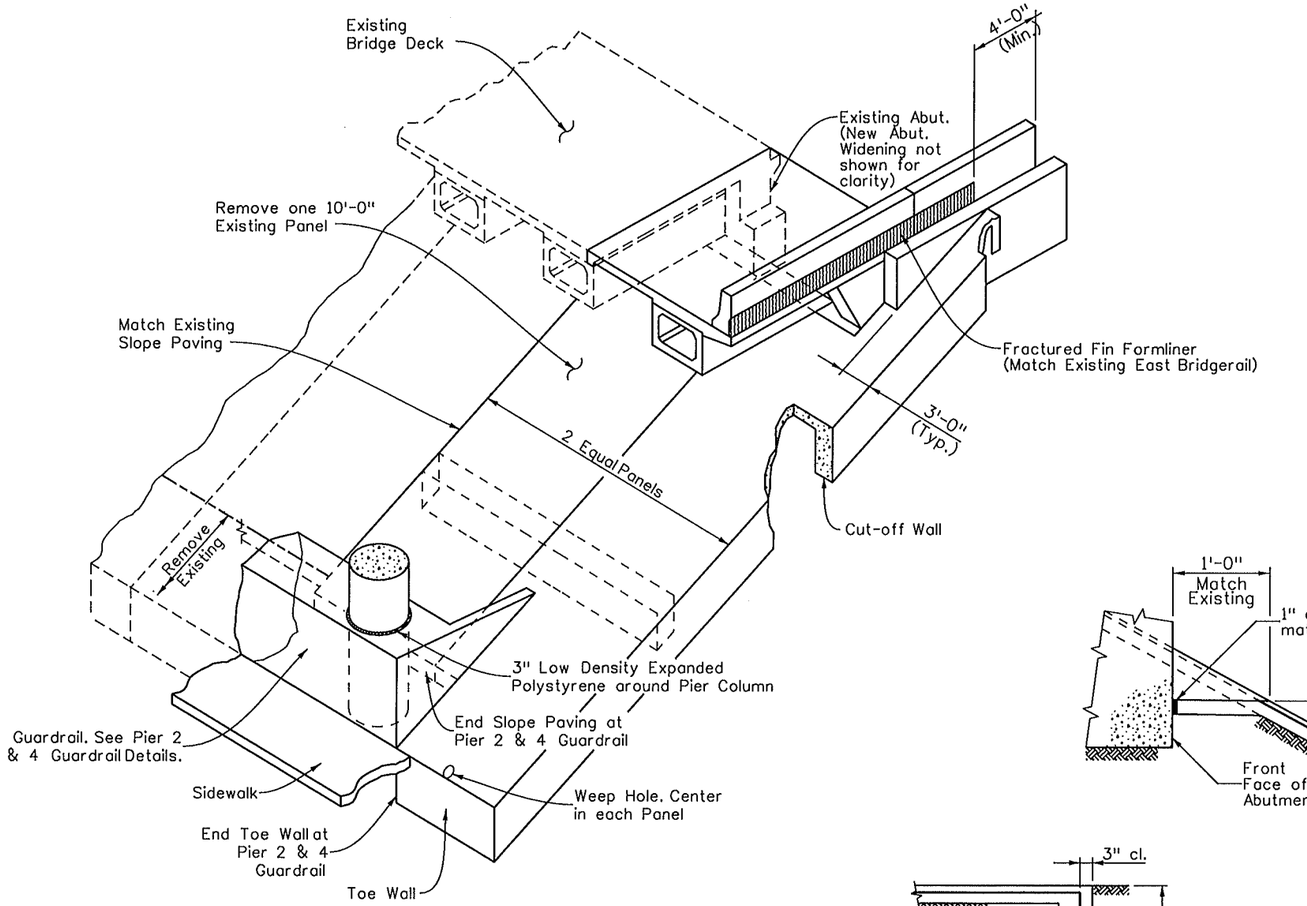

ISOMETRIC VIEW

NOTES:

Slope paving shall be poured in 10 ft. transverse sections with a tooled construction joint at each section.

Wire fabric shall be 2" from the end of joints and shall lap 8" at splices.

Where slope or berm paving butts against structural concrete, separate with 1" expansion joint material.

Expansion joint material and welded wire fabric shall not be paid for separately, but shall be included in the work.

Structure excavation for concrete slope and ditch paving shall be limited to the actual volume occupied by the slope paving concrete.

This drawing shows general details only. For limits of slope paving see General Layout.

■ 2.5 lbs. of an approved polypropylene fiber, per cubic yard of concrete, may be substituted for the WWF in this slope paving. If this substitution is made, a continuous #5 reinforcing bar shall be added near the top and bottom of the cutoff wall. The fiber shall be added to the concrete mix in such a fashion that the fibers are uniformly dispersed in the concrete without visible balls or clumps in either the finished slope paving or in the plastic concrete delivered from the concrete truck.

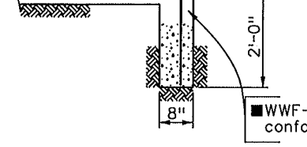

TYPICAL SECTION THRU CUT-OFF WALL

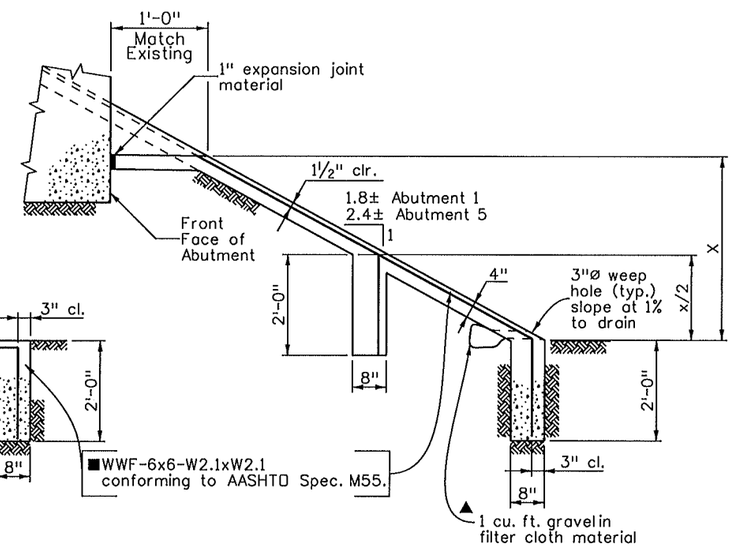

▲ To be included in Item 507.

TYPICAL SECTION THRU SLOPE PAVING

Sheet Revisions		
Date:	Comments	Init.

0000

FELSBURG HOLT & ULLEVIG
6300 South Syracuse Way Suite 600 Centennial, CO 80111
303.721.1440 fax 303.721.0832 fhu@fhueng.com

AURORA

Colorado Department of Transportation
CDOT DEPARTMENT OF TRANSPORTATION
2000 S. Holly Street
Denver, Co 80222
Phone: 303-757-9350 FAX: 303-757-9004
Region 6 RJE

As Constructed				
No Revisions:	I-225/COLFAX - PHASE 3 I-225 OVER COLFAX AVENUE SLOPE PAVING DETAILS			Project No./Code
Revised:	Designer: KMA	Structure Numbers	F-17-JK	STU 2254-082
	Detailer: RAD			17718
Void:	Sheet Subset: BRIDGE	Subset Sheets: B34 of 38		Sheet Number 75

REV. MAR. 2011 211007

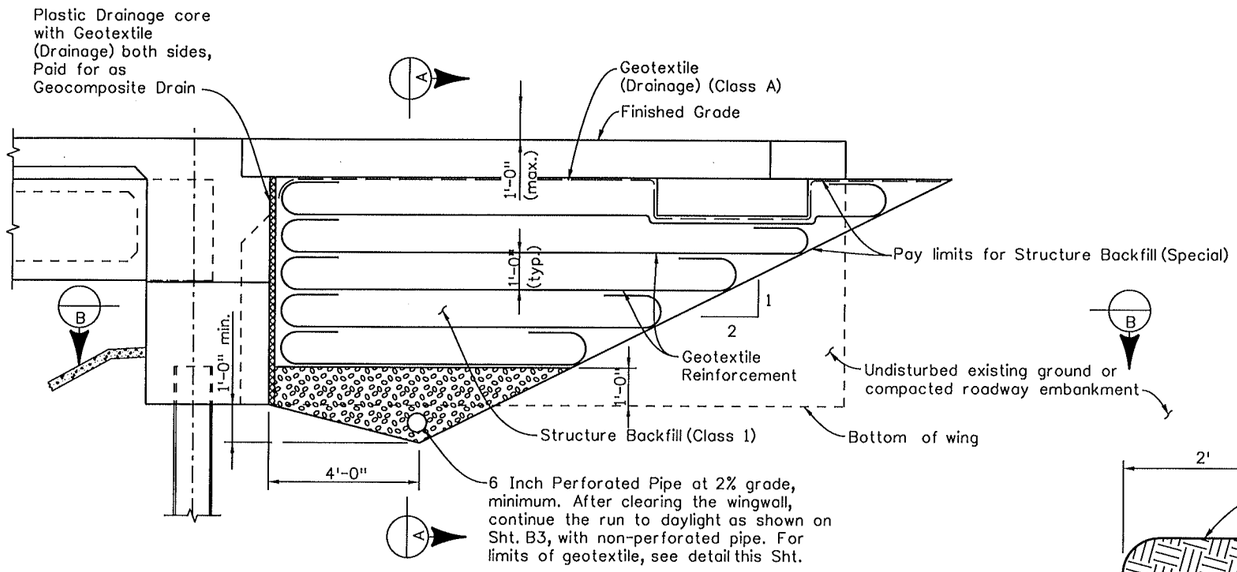

SECTION PERPENDICULAR TO ABUTMENT

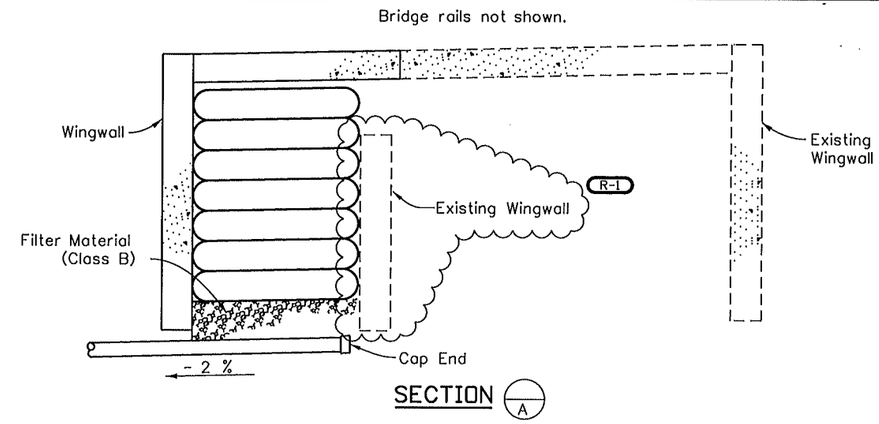

SECTION (A)

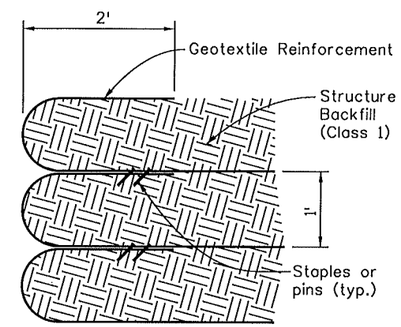

WRAP DETAIL

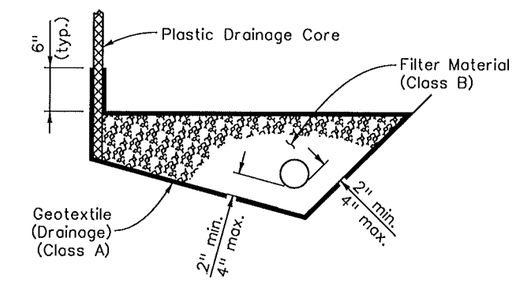

6 INCH PERFORATED PIPE UNDERDRAIN

6 Inch Perforated Pipe Underdrain includes all Filter Material (Class B) and Geotextile (Drainage) (Class A) surrounding the Filter Material (Class B)

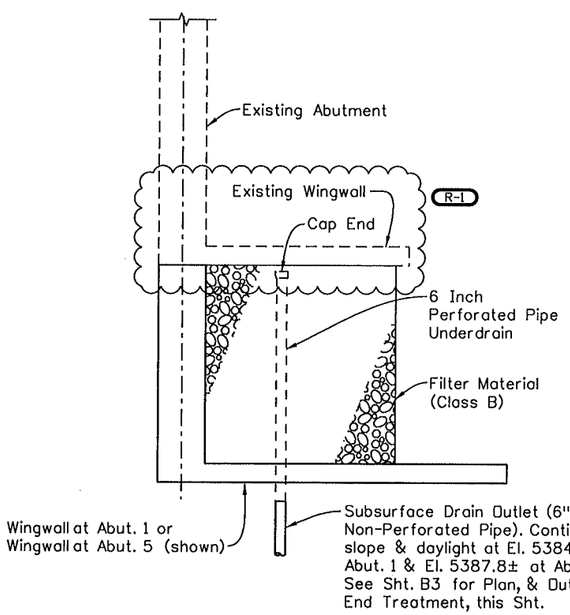

SECTION (B)

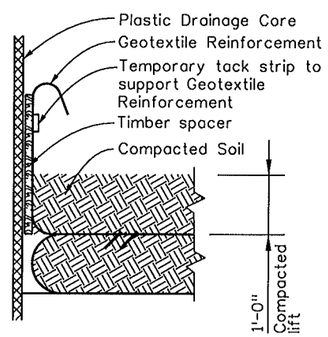

GAP DETAIL STEP 1

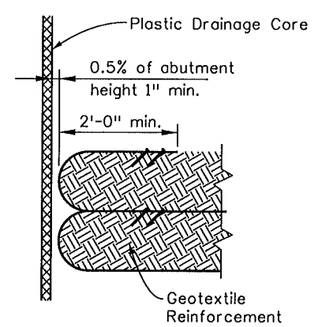

GAP DETAIL STEP 2

The Geotextile Reinforcement wrap at Back Face of Abutment shall be temporarily hung with a spacer board and tack strip. After reaching a total of 1'-0" compacted lift, the tack strip shall be removed and Geotextile Reinforcement shall be pulled back slack free with its end anchored to soil underneath with staples or pins before the spacer board is pulled. Any alternate method to maintain the minimum gap between Abutment Concrete and Reinforced Soil may be proposed to the Engineer for approval.

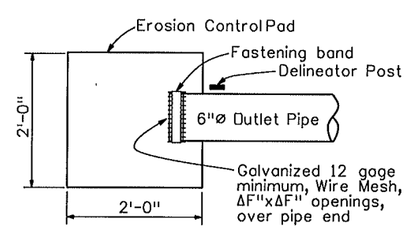

PLAN

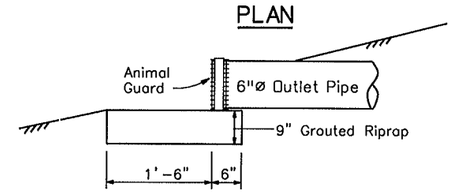

ELEVATION

OUTLET PIPE END TREATMENT

Notes:

Geotextile Reinforcement shall be woven fabric with a Minimum Average Roll Value of 4800 lb/ft for installations with a gap and 2400 lb/ft for installations without a gap based on ASTM D4595.

Geotextile Reinforcement shall be placed by alternating Machine Direction (MD) with Cross Machine Direction (XD) from layer to layer.

The Geotextile Reinforcement wrap at Back Face of Abutment shall be pulled back slack free with its end anchored to soil underneath with staples or pins.

Minimum splice of all Geofabric shall consist of 6" of overlap.

Payment will be made under item 206 Structure Backfill (Special)(cu.yd.) and shall include the cost for Structure Backfill (Class 1), Geotextile Reinforcement, 6 inch Perforated Pipe underdrain and Subsurface Drain Outlet (6"Ø Non-Perforated Pipe).

Installation of Pipe Underdrain and Subsurface Drain Outlet will conform to the Construction requirements of section 605.03 and 605.06, respectively.

Sheet Revisions			RAD
	Date:	Comments	Init.
R-1	05-02-11	Showed existing Wingwall	PRS

FELSBURG HOLT & ULLEVIG
6300 South Syracuse Way Suite 600 Centennial, CO 80111
303.721.1440 fax 303.721.0832 fhu@fhueng.com

AURORA

Colorado Department of Transportation
DOT
2000 S. Holly Street
Denver, Co 80222
Phone: 303-757-9350 FAX: 303-757-9004
Region 6 RJE

As Constructed
No Revisions:
Revised:
Void:

I-225/COLFAX - PHASE 3
I-225 OVER COLFAX AVENUE
MECHANICALLY STABILIZED EARTH BACKFILL

Designer:	KMA/GWB	Structure Numbers	F-17-JK
Detailer:	RAD		
Sheet Subset:	BRIDGE	Subset Sheets:	B35 of 38

Project No./Code
STU 2254-082
17718
Sheet Number 76

Design				Detail				Quantities		
	INITIAL	DATE		INITIAL	DATE		INITIAL	DATE
Designed By	KMA	01/07	Detailed By	RAD	02/08	Quantities By	PRS	02/07
Checked By	PRS	01/07	Checked By	KMA	01/07	Checked By		

Revision Dates (Preliminary Stage Only)

Ricdi 2:51:13 PM L:\09004\14493\Phase 3\Bridge\Drawings\14493BRDG_PH3_F-17-JK_Colfax_Backfill.dgn
4/27/2011 CDOT-PDFDraftQuality_XM.pltcfg CDOT-PenTable.tbl

MAR. 2011 211007

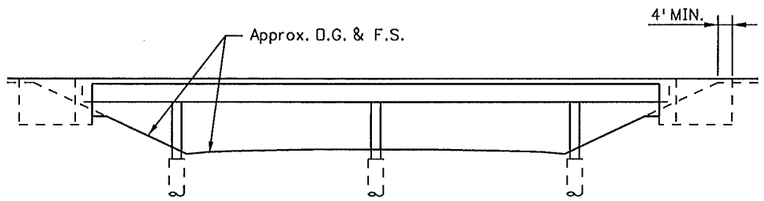

ELEVATION

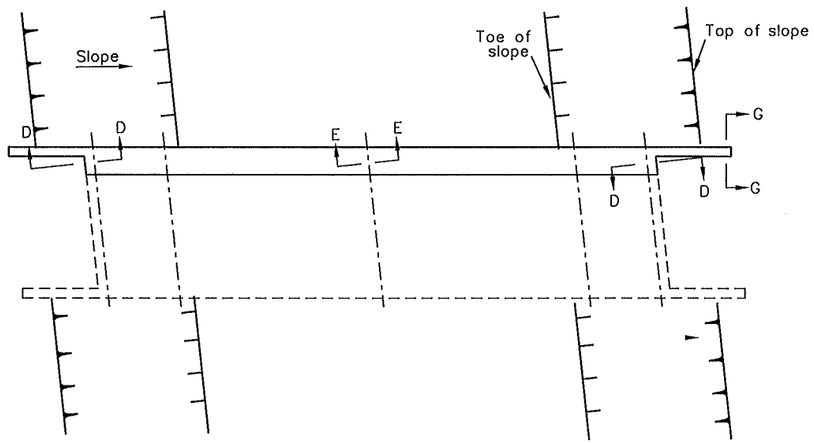

PLAN

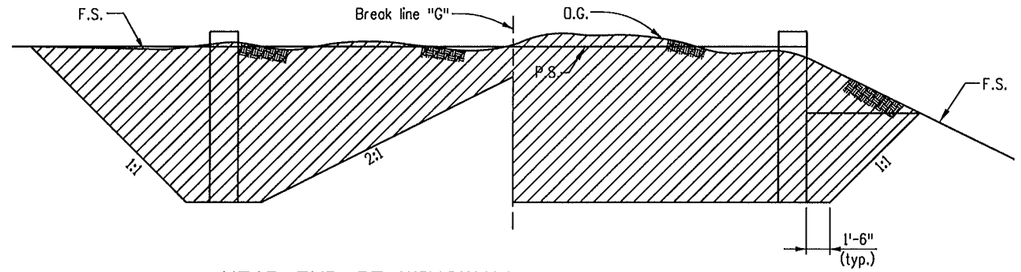

NEAR END OF WINGWALL

NEAR B.F. OF ABUT.

SECTION G-G (EXCAVATION)

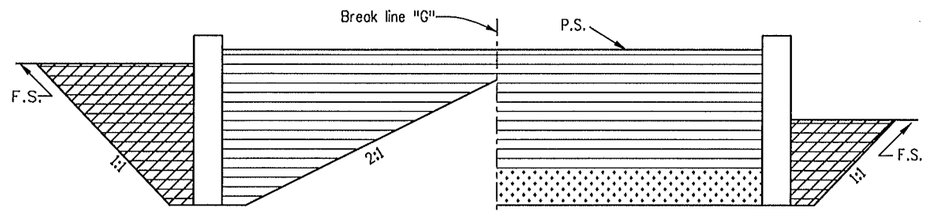

NEAR END OF WINGWALL

NEAR B.F. OF ABUT.

For purposes of quantity calculations this template applies out to end of wingwall.

SECTION G-G (BACKFILL)

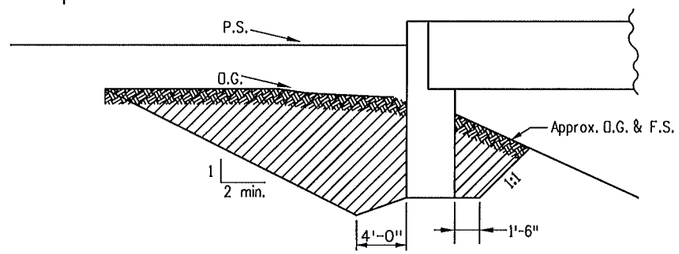

SECTION D-D (EXCAVATION)

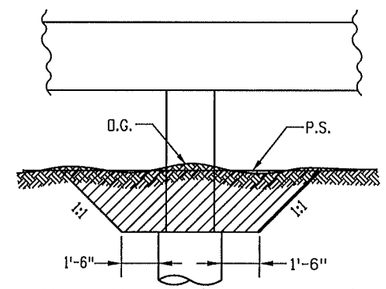

SECTION E-E (EXCAVATION)

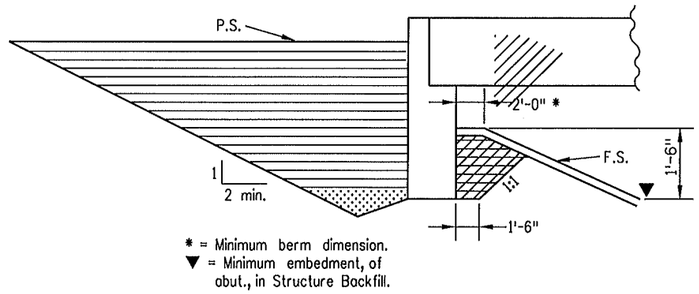

* = Minimum berm dimension.
▼ = Minimum embedment, of abut., in Structure Backfill.

SECTION D-D (BACKFILL)

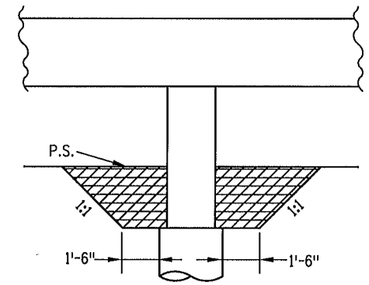

SECTION E-E (BACKFILL)

GENERAL NOTES

Unless shown otherwise in the plans, this drawing gives the extent of Structure Excavation and Structure Backfill pay limits. The Contractor may elect to extend the Structure Excavation and Structure Backfill beyond the limits shown here. Any additional Excavation or Backfill beyond these limits will not be measured nor paid for.

Structure footings which are located in rock shall be poured out to undisturbed rock, without forming, in conformance with 601.09.

Structure Excavation for Slope Paving not shown. All excavation and backfilling required for slope paving shall not be paid for seperately, but shall be included in the work.

LEGEND

- Roadway Excavation
- Structure Excavation
- Structure Backfill (Class 1) with Mechanical Reinforcement of Soil, as shown on Sht. B34.
- Structure Backfill (Class 2)
- Filter Material at Underdrain

ABBREVIATIONS

O.G.	Original Ground
P.S.	Planned Subgrade
F.S.	Planned Finished Surface

Revision Dates (Preliminary Stage Only)			
Design	INITIAL	DATE	
Designed By			
Checked By			
Detail	INITIAL	DATE	
Detailed By	RAD	12/08	
Checked By			
Quantities	INITIAL	DATE	
Quantities By			
Checked By			

seeliner 9:16:01 AM L:\09004\14493\Phase 3\Bridge\Drawings\14493BRDG_PH3_F-17-JK_Colfax_Excavation.dgn
3/15/2011 CDOT-PDFDraftQuality_XM.pltcfg *

Sheet Revisions		PRH
Date:	Comments	Init.

FELSBURG HOLT & ULLEVIG
6300 South Syracuse Way Suite 600 Centennial, CO 80111
303.721.1440 fax 303.721.0832 fhu@fhueng.com

AURORA

Colorado Department of Transportation
2000 S. Holly Street
Denver, Co 80222
Phone: 303-757-9350 FAX: 303-757-9004
Region 6 RJE

As Constructed	I-225/COLFAX - PHASE 3 I-225 OVER COLFAX AVENUE EXCAVATION & BACKFILL DETAILS			Project No./Code
No Revisions:				STU 2254-082
Revised:	Designer: KMA	Structure Numbers	F-17-JK	17718
	Detailer: RAD			
Void:	Sheet Subset: BRIDGE	Subset Sheets: B36 of 38		Sheet Number 77

STRUCTURE ID: F-17-JK BRIDGE GEOMETRY (WIN2.1.0e) 10/03/01 10:43

DESCRIPTION

Units:feet;
Project:09-004;Suboccount:;
Designer:KASS ALKANANI;Detailer:RICK DILLON;
Location:I1225 OVER COLFAX AVE.
FOUR SPANS (33'-9",73'-0",73'-0",41'-9") BRIDGE
CARRYING SB I-225 OVER COLFAX AVE
COMPOSITE SLAB AND PRECAST PRESTRESSED CONCRETE BOX GIRDER

HORIZONTAL ALIGNMENT DATA

HORIZONTAL TANGENT

VERTICAL ALIGNMENT DATA

ELEVATION AT PI	ELEVATION AT GRADE	STATION		ELEVATION AT GRADE	ELEVATION AT PI	PERCENT GRADE
						-0.370000
		2516+75.0000	PC	5396.6980		
		2520+15.0000	PI	5393.2045	5395.4400	
		2523+55.0000	PT	5385.2400		
						-3.000000

TABLE OF ROADWAY CROSS-SLOPES (SUPERELEVATION: E= -NC-)

STATION	SLOPE LEFT	SLOPE RIGHT	VC LENGTH
(ON TANGENT)	-0.0200	0.0200	50.00 (MAX)

OFFSET PROFILE CONTROL TO PIVOT POINT = 0.0000 FEET

LIMITS OF VALID ELEVATION AND CROSS-SLOPE DATA BEGIN * UNLIMITED * END * UNLIMITED *

LAYOUT LINE DATA

LAYOUT LINE DEFINED TO BE COINCIDENT WITH HORIZONTAL CONTROL

	HCL STA	OFFSET	X	Y
LAYOUT LINE INTERSECTS REF LINE AT	2518+48.8700	0.00000000	0.0000	0.0000

These Bridge Deck Elevations are calculated based on the profile shown on Sht. B4, which is a "best fit" profile to the existing deck survey. The survey indicates a varying existing deck cross slope. The Contractor shall match the existing deck at the Bridge Layout Line/Sawcut Line and adjust the cross slope as required to obtain the Left Edge of Deck Elevations shown.

LONGITUDINAL LINE: LEFT EDGE OF DECK — PARALLEL TO HORIZONTAL CONTROL — AT FINISHED GRADE

BENT LINE	STATION	OFFSET	ELEVATION	ELEV+DL	X	Y	NORTHING	EASTING	BENT LNTH	SKEW	GIRDER LNTH	CRS-SLP
BF ABUT 5	2518+46.8700	-12.2500	5395.2458	0.0000	-12.2500	-2.0000	441452.0349	690537.8334	-12.2500	0 00 00.00	-2.0000	-0.020000
BRG ABUT 5	2518+48.8700	-12.2500	5395.2251	5395.2251	-12.2500	0.0000	441454.0349	690537.8312	-12.2500	0 00 00.00	0.0000	-0.020000
F-1	2518+53.1450	-12.2500	5395.1802	5395.1845	-12.2500	4.2750	441458.3099	690537.8264			4.2750	-0.020000
F-2	2518+57.4200	-12.2500	5395.1345	5395.1432	-12.2500	8.5500	441462.5849	690537.8217			8.5500	-0.020000
F-3	2518+61.6950	-12.2500	5395.0882	5395.1003	-12.2500	12.8250	441466.8599	690537.8169			12.8250	-0.020000
F-4	2518+65.9700	-12.2500	5395.0412	5395.0556	-12.2500	17.1000	441471.1348	690537.8122			17.1000	-0.020000
F-5	2518+70.2450	-12.2500	5394.9934	5395.0087	-12.2500	21.3750	441475.4098	690537.8074			21.3750	-0.020000
F-6	2518+74.5200	-12.2500	5394.9450	5394.9594	-12.2500	25.6500	441479.6848	690537.8026			25.6500	-0.020000
F-7	2518+78.7950	-12.2500	5394.8958	5394.9079	-12.2500	29.9250	441483.9598	690537.7979			29.9250	-0.020000
F-8	2518+83.0700	-12.2500	5394.8459	5394.8546	-12.2500	34.2000	441488.2348	690537.7931			34.2000	-0.020000
F-9	2518+87.3450	-12.2500	5394.7954	5394.7997	-12.2500	38.4750	441492.5098	690537.7884			38.4750	-0.020000
CL PIER 4	2518+91.6200	-12.2500	5394.7441	5394.7441	-12.2500	42.7500	441496.7848	690537.7836	-12.2500	0 00 00.00	42.7500	-0.020000
F-1	2518+99.1200	-12.2500	5394.6524	5394.6890	-12.2500	50.2500	441504.2848	690537.7753			50.2500	-0.020000
F-2	2519+06.6200	-12.2500	5394.5586	5394.6295	-12.2500	57.7500	441511.7848	690537.7669			57.7500	-0.020000
F-3	2519+14.1200	-12.2500	5394.4625	5394.5613	-12.2500	65.2500	441519.2848	690537.7586			65.2500	-0.020000
F-4	2519+21.6200	-12.2500	5394.3643	5394.4810	-12.2500	72.7500	441526.7848	690537.7502			72.7500	-0.020000
F-5	2519+29.1200	-12.2500	5394.2640	5394.3868	-12.2500	80.2500	441534.2848	690537.7418			80.2500	-0.020000
F-6	2519+36.6200	-12.2500	5394.1614	5394.2781	-12.2500	87.7500	441541.7848	690537.7335			87.7500	-0.020000
F-7	2519+44.1200	-12.2500	5394.0567	5394.1554	-12.2500	95.2500	441549.2848	690537.7251			95.2500	-0.020000
F-8	2519+51.6200	-12.2500	5393.9498	5394.0207	-12.2500	102.7500	441556.7848	690537.7168			102.7500	-0.020000
F-9	2519+59.1200	-12.2500	5393.8407	5393.8773	-12.2500	110.2500	441564.2848	690537.7084			110.2500	-0.020000
CL PIER 3	2519+66.6200	-12.2500	5393.7294	5393.7294	-12.2500	117.7500	441571.7848	690537.7001	-12.2500	0 00 00.00	117.7500	-0.020000
F-1	2519+74.1200	-12.2500	5393.6160	5393.6526	-12.2500	125.2500	441579.2848	690537.6917			125.2500	-0.020000
F-2	2519+81.6200	-12.2500	5393.5004	5393.5714	-12.2500	132.7500	441586.7848	690537.6834			132.7500	-0.020000
F-3	2519+89.1200	-12.2500	5393.3826	5393.4814	-12.2500	140.2500	441594.2848	690537.6750			140.2500	-0.020000
F-4	2519+96.6200	-12.2500	5393.2627	5393.3793	-12.2500	147.7500	441601.7848	690537.6667			147.7500	-0.020000
F-5	2520+04.1200	-12.2500	5393.1405	5393.2634	-12.2500	155.2500	441609.2848	690537.6583			155.2500	-0.020000
F-6	2520+11.6200	-12.2500	5393.0162	5393.1329	-12.2500	162.7500	441616.7848	690537.6500			162.7500	-0.020000
F-7	2520+19.1200	-12.2500	5392.8897	5392.9885	-12.2500	170.2500	441624.2848	690537.6416			170.2500	-0.020000
F-8	2520+26.6200	-12.2500	5392.7611	5392.8321	-12.2500	177.7500	441631.7847	690537.6333			177.7500	-0.020000
F-9	2520+34.1200	-12.2500	5392.6303	5392.6668	-12.2500	185.2500	441639.2847	690537.6249			185.2500	-0.020000
CL PIER 2	2520+41.6200	-12.2500	5392.4972	5392.4972	-12.2500	192.7500	441646.7847	690537.6166	-12.2500	0 00 00.00	192.7500	-0.020000
F-1	2520+45.0950	-12.2500	5392.4349	5392.4367	-12.2500	196.2250	441650.2597	690537.6127			196.2250	-0.020000
F-2	2520+48.5700	-12.2500	5392.3721	5392.3757	-12.2500	199.7000	441653.7347	690537.6088			199.7000	-0.020000
F-3	2520+52.0450	-12.2500	5392.3088	5392.3140	-12.2500	203.1750	441657.2097	690537.6050			203.1750	-0.020000
F-4	2520+55.5200	-12.2500	5392.2450	5392.2512	-12.2500	206.6500	441660.6847	690537.6011			206.6500	-0.020000
F-5	2520+58.9950	-12.2500	5392.1808	5392.1873	-12.2500	210.1250	441664.1597	690537.5972			210.1250	-0.020000
F-6	2520+62.4700	-12.2500	5392.1161	5392.1223	-12.2500	213.6000	441667.6347	690537.5934			213.6000	-0.020000
F-7	2520+65.9450	-12.2500	5392.0509	5392.0561	-12.2500	217.0750	441671.1097	690537.5895			217.0750	-0.020000
F-8	2520+69.4200	-12.2500	5391.9853	5391.9889	-12.2500	220.5500	441674.5847	690537.5856			220.5500	-0.020000
F-9	2520+72.8950	-12.2500	5391.9192	5391.9210	-12.2500	224.0250	441678.0597	690537.5818			224.0250	-0.020000
BRG ABUT 1	2520+76.3700	-12.2500	5391.8526	5391.8526	-12.2500	227.5000	441681.5347	690537.5779	-12.2500	0 00 00.00	227.5000	-0.020000
BF ABUT 1	2520+78.3700	-12.2500	5391.8141	0.0000	-12.2500	229.5000	441683.5347	690537.5757	-12.2500	0 00 00.00	229.5000	-0.020000

LONGITUDINAL LINE: LEFT GUTTER LINE — PARALLEL TO HORIZONTAL CONTROL — AT FINISHED GRADE

BENT LINE	STATION	OFFSET	ELEVATION	ELEV+DL	X	Y	NORTHING	EASTING	BENT LNTH	SKEW	GIRDER LNTH	CRS-SLP
BF ABUT 5	2518+46.8700	-10.7500	5395.2758	0.0000	-10.7500	-2.0000	441452.0365	690539.3334	-10.7500	0 00 00.00	-2.0000	-0.020000
BRG ABUT 5	2518+48.8700	-10.7500	5395.2551	5395.2551	-10.7500	0.0000	441454.0365	690539.3312	-10.7500	0 00 00.00	0.0000	-0.020000
F-1	2518+53.1450	-10.7500	5395.2102	5395.2145	-10.7500	4.2750	441458.3115	690539.3264			4.2750	-0.020000
F-2	2518+57.4200	-10.7500	5395.1645	5395.1732	-10.7500	8.5500	441462.5865	690539.3217			8.5500	-0.020000
F-3	2518+61.6950	-10.7500	5395.1182	5395.1303	-10.7500	12.8250	441466.8615	690539.3169			12.8250	-0.020000
F-4	2518+65.9700	-10.7500	5395.0712	5395.0856	-10.7500	17.1000	441471.1365	690539.3122			17.1000	-0.020000
F-5	2518+70.2450	-10.7500	5395.0234	5395.0387	-10.7500	21.3750	441475.4115	690539.3074			21.3750	-0.020000
F-6	2518+74.5200	-10.7500	5394.9750	5394.9894	-10.7500	25.6500	441479.6865	690539.3026			25.6500	-0.020000
F-7	2518+78.7950	-10.7500	5394.9258	5394.9379	-10.7500	29.9250	441483.9615	690539.2979			29.9250	-0.020000
F-8	2518+83.0700	-10.7500	5394.8759	5394.8846	-10.7500	34.2000	441488.2365	690539.2931			34.2000	-0.020000
F-9	2518+87.3450	-10.7500	5394.8254	5394.8297	-10.7500	38.4750	441492.5115	690539.2884			38.4750	-0.020000
CL PIER 4	2518+91.6200	-10.7500	5394.7741	5394.7741	-10.7500	42.7500	441496.7865	690539.2836	-10.7500	0 00 00.00	42.7500	-0.020000
F-1	2518+99.1200	-10.7500	5394.6824	5394.7190	-10.7500	50.2500	441504.2865	690539.2753			50.2500	-0.020000
F-2	2519+06.6200	-10.7500	5394.5886	5394.6595	-10.7500	57.7500	441511.7865	690539.2669			57.7500	-0.020000
F-3	2519+14.1200	-10.7500	5394.4925	5394.5913	-10.7500	65.2500	441519.2865	690539.2585			65.2500	-0.020000
F-4	2519+21.6200	-10.7500	5394.3943	5394.5110	-10.7500	72.7500	441526.7865	690539.2502			72.7500	-0.020000
F-5	2519+29.1200	-10.7500	5394.2940	5394.4168	-10.7500	80.2500	441534.2865	690539.2418			80.2500	-0.020000
F-6	2519+36.6200	-10.7500	5394.1914	5394.3081	-10.7500	87.7500	441541.7865	690539.2335			87.7500	-0.020000
F-7	2519+44.1200	-10.7500	5394.0867	5394.1854	-10.7500	95.2500	441549.2865	690539.2251			95.2500	-0.020000
F-8	2519+51.6200	-10.7500	5393.9798	5394.0507	-10.7500	102.7500	441556.7865	690539.2168			102.7500	-0.020000
F-9	2519+59.1200	-10.7500	5393.8707	5393.9073	-10.7500	110.2500	441564.2865	690539.2084			110.2500	-0.020000
CL PIER 3	2519+66.6200	-10.7500	5393.7594	5393.7594	-10.7500	117.7500	441571.7865	690539.2001	-10.7500	0 00 00.00	117.7500	-0.020000
F-1	2519+74.1200	-10.7500	5393.6460	5393.6826	-10.7500	125.2500	441579.2865	690539.1917			125.2500	-0.020000
F-2	2519+81.6200	-10.7500	5393.5304	5393.6014	-10.7500	132.7500	441586.7864	690539.1834			132.7500	-0.020000
F-3	2519+89.1200	-10.7500	5393.4126	5393.5114	-10.7500	140.2500	441594.2864	690539.1750			140.2500	-0.020000
F-4	2519+96.6200	-10.7500	5393.2927	5393.4093	-10.7500	147.7500	441601.7864	690539.1667			147.7500	-0.020000
F-5	2520+04.1200	-10.7500	5393.1705	5393.2934	-10.7500	155.2500	441609.2864	690539.1583			155.2500	-0.020000
F-6	2520+11.6200	-10.7500	5393.0462	5393.1629	-10.7500	162.7500	441616.7864	690539.1500			162.7500	-0.020000
F-7	2520+19.1200	-10.7500	5392.9197	5393.0185	-10.7500	170.2500	441624.2864	690539.1416			170.2500	-0.020000
F-8	2520+26.6200	-10.7500	5392.7911	5392.8621	-10.7500	177.7500	441631.7864	690539.1333			177.7500	-0.020000
F-9	2520+34.1200	-10.7500	5392.6603	5392.6968	-10.7500	185.2500	441639.2864	690539.1249			185.2500	-0.020000
CL PIER 2	2520+41.6200	-10.7500	5392.5272	5392.5272	-10.7500	192.7500	441646.7864	690539.1166	-10.7500	0 00 00.00	192.7500	-0.020000
F-1	2520+45.0950	-10.7500	5392.4649	5392.4667	-10.7500	196.2250	441650.2614	690539.1127			196.2250	-0.020000
F-2	2520+48.5700	-10.7500	5392.4021	5392.4057	-10.7500	199.7000	441653.7364	690539.1088			199.7000	-0.020000
F-3	2520+52.0450	-10.7500	5392.3388	5392.3440	-10.7500	203.1750	441657.2114	690539.1050			203.1750	-0.020000
F-4	2520+55.5200	-10.7500	5392.2750	5392.2812	-10.7500	206.6500	441660.6864	690539.1011			206.6500	-0.020000
F-5	2520+58.9950	-10.7500	5392.2108	5392.2173	-10.7500	210.1250	441664.1614	690539.0972			210.1250	-0.020000
F-6	2520+62.4700	-10.7500	5392.1461	5392.1523	-10.7500	213.6000	441667.6364	690539.0934			213.6000	-0.020000
F-7	2520+65.9450	-10.7500	5392.0809	5392.0861	-10.7500	217.0750	441671.1114	690539.0895			217.0750	-0.020000
F-8	2520+69.4200	-10.7500	5392.0153	5392.0189	-10.7500	220.5500	441674.5864	690539.0856			220.5500	-0.020000
F-9	2520+72.8950	-10.7500	5391.9492	5391.9510	-10.7500	224.0250	441678.0614	690539.0818			224.0250	-0.020000
BRG ABUT 1	2520+76.3700	-10.7500	5391.8826	5391.8826	-10.7500	227.5000	441681.5364	690539.0779	-10.7500	0 00 00.00	227.5000	-0.020000
BF ABUT 1	2520+78.3700	-10.7500	5391.8441	0.0000	-10.7500	229.5000	441683.5364	690539.0757	-10.7500	0 00 00.00	229.5000	-0.020000

Note: Elevations are at top of concrete deck (Finished Grade).

Positive Roadway Cross Slope is Upwards from the Profile Grade Line.

These Stations, Coordinates, Offsets and Lengths define the layout of the structure in a two dimensional horizontal plane. Elevations define the final grade of the finished concrete deck. Fabrication of structural components through the direct use of this information is not intended or advisable.

Sheet Revisions		
Date:	Comments	Init.

FELSBURG HOLT & ULLEVIG
6300 South Syracuse Way Suite 600 Centennial, CO 80111 303.721.1440 fax 303.721.0832 fhu@fhueng.com

AURORA

Colorado Department of Transportation
DOT DEPARTMENT OF TRANSPORTATION
2000 S. Holly Street
Denver, Co 80222
Phone: 303-757-9350 FAX: 303-757-9004
Region 6 RJE

As Constructed
No Revisions:
Revised:
Void:

I-225/COLFAX - PHASE 3
I-225 OVER COLFAX AVENUE
BRIDGE DECK ELEVATIONS (1 OF 2)

Designer:	KMA	Structure Numbers	F-17-JK
Detailer:	RAD		
Sheet Subset:	BRIDGE	Subset Sheets:	B37 of 38

Project No./Code
STU 2254-082
17718
Sheet Number 78

Design			Detail			Quantities		
	INITIAL	DATE		INITIAL	DATE		INITIAL	DATE
Designed By	KMA	12/09	Detailed By	RAD	12/09	Quantities By		
Checked By			Checked By	PRS	12/09	Checked By		

Revision Dates (Preliminary Stage Only) MM/YY

MAR. 2011 211007

78

soeliner 9:16:11 AM L:\09004\14493\Phase 3\Bridge\Drawings\14493BRDG_PH3_F-17-JK_Colfax_DeckElevs01.dgn
3/15/2011 CDOT-PDFDraftQuality_XM.pltcfg

LONGITUDINAL LINE: CL G1 — PARALLEL TO HORIZONTAL CONTROL — AT FINISHED GRADE

BENT LINE	STATION	OFFSET	ELEVATION	ELEV+DL	X	Y	NORTHING	EASTING	BENT LNTH	SKEW	GIRDER LNTH	CRS-SLP
BF ABUT 5	2518+46.8700	-8.0000	5395.3308	0.0000	-8.0000	-2.0000	441452.0396	690542.0834	-8.0000	0 00 00.00	-2.0000	-0.020000
BRG ABUT 5	2518+48.8700	-8.0000	5395.3101	5395.3101	-8.0000	0.0000	441454.0396	690542.0812	-8.0000	0 00 00.00	0.0000	-0.020000
F-1	2518+53.1450	-8.0000	5395.2652	5395.2695	-8.0000	4.2750	441458.3146	690542.0764			4.2750	-0.020000
F-2	2518+57.4200	-8.0000	5395.2195	5395.2282	-8.0000	8.5500	441462.5896	690542.0717			8.5500	-0.020000
F-3	2518+61.6950	-8.0000	5395.1732	5395.1853	-8.0000	12.8250	441466.8646	690542.0669			12.8250	-0.020000
F-4	2518+65.9700	-8.0000	5395.1262	5395.1406	-8.0000	17.1000	441471.1396	690542.0622			17.1000	-0.020000
F-5	2518+70.2450	-8.0000	5395.0784	5395.0937	-8.0000	21.3750	441475.4146	690542.0574			21.3750	-0.020000
F-6	2518+74.5200	-8.0000	5395.0300	5395.0444	-8.0000	25.6500	441479.6896	690542.0526			25.6500	-0.020000
F-7	2518+78.7950	-8.0000	5394.9808	5394.9929	-8.0000	29.9250	441483.9646	690542.0479			29.9250	-0.020000
F-8	2518+83.0700	-8.0000	5394.9309	5394.9396	-8.0000	34.2000	441488.2396	690542.0431			34.2000	-0.020000
F-9	2518+87.3450	-8.0000	5394.8804	5394.8847	-8.0000	38.4750	441492.5146	690542.0384			38.4750	-0.020000
CL PIER 4	2518+91.6200	-8.0000	5394.8291	5394.8291	-8.0000	42.7500	441496.7896	690542.0336	-8.0000	0 00 00.00	42.7500	-0.020000
F-1	2518+99.1200	-8.0000	5394.7374	5394.7740	-8.0000	50.2500	441504.2896	690542.0253			50.2500	-0.020000
F-2	2519+06.6200	-8.0000	5394.6436	5394.7145	-8.0000	57.7500	441511.7896	690542.0169			57.7500	-0.020000
F-3	2519+14.1200	-8.0000	5394.5475	5394.6463	-8.0000	65.2500	441519.2896	690542.0085			65.2500	-0.020000
F-4	2519+21.6200	-8.0000	5394.4493	5394.5660	-8.0000	72.7500	441526.7895	690542.0002			72.7500	-0.020000
F-5	2519+29.1200	-8.0000	5394.3490	5394.4718	-8.0000	80.2500	441534.2895	690541.9918			80.2500	-0.020000
F-6	2519+36.6200	-8.0000	5394.2464	5394.3631	-8.0000	87.7500	441541.7895	690541.9835			87.7500	-0.020000
F-7	2519+44.1200	-8.0000	5394.1417	5394.2404	-8.0000	95.2500	441549.2895	690541.9751			95.2500	-0.020000
F-8	2519+51.6200	-8.0000	5394.0348	5394.1057	-8.0000	102.7500	441556.7895	690541.9668			102.7500	-0.020000
F-9	2519+59.1200	-8.0000	5393.9257	5393.9623	-8.0000	110.2500	441564.2895	690541.9584			110.2500	-0.020000
CL PIER 3	2519+66.6200	-8.0000	5393.8144	5393.8144	-8.0000	117.7500	441571.7895	690541.9501	-8.0000	0 00 00.00	117.7500	-0.020000
F-1	2519+74.1200	-8.0000	5393.7010	5393.7376	-8.0000	125.2500	441579.2895	690541.9417			125.2500	-0.020000
F-2	2519+81.6200	-8.0000	5393.5854	5393.6564	-8.0000	132.7500	441586.7895	690541.9334			132.7500	-0.020000
F-3	2519+89.1200	-8.0000	5393.4676	5393.5664	-8.0000	140.2500	441594.2895	690541.9250			140.2500	-0.020000
F-4	2519+96.6200	-8.0000	5393.3477	5393.4643	-8.0000	147.7500	441601.7895	690541.9167			147.7500	-0.020000
F-5	2520+04.1200	-8.0000	5393.2255	5393.3484	-8.0000	155.2500	441609.2895	690541.9083			155.2500	-0.020000
F-6	2520+11.6200	-8.0000	5393.1012	5393.2179	-8.0000	162.7500	441616.7895	690541.9000			162.7500	-0.020000
F-7	2520+19.1200	-8.0000	5392.9747	5393.0735	-8.0000	170.2500	441624.2895	690541.8916			170.2500	-0.020000
F-8	2520+26.6200	-8.0000	5392.8461	5392.9171	-8.0000	177.7500	441631.7895	690541.8833			177.7500	-0.020000
F-9	2520+34.1200	-8.0000	5392.7153	5392.7518	-8.0000	185.2500	441639.2895	690541.8749			185.2500	-0.020000
CL PIER 2	2520+41.6200	-8.0000	5392.5822	5392.5822	-8.0000	192.7500	441646.7895	690541.8666	-8.0000	0 00 00.00	192.7500	-0.020000
F-1	2520+45.0950	-8.0000	5392.5199	5392.5217	-8.0000	196.2250	441650.2645	690541.8627			196.2250	-0.020000
F-2	2520+48.5700	-8.0000	5392.4571	5392.4607	-8.0000	199.7000	441653.7395	690541.8588			199.7000	-0.020000
F-3	2520+52.0450	-8.0000	5392.3938	5392.3990	-8.0000	203.1750	441657.2145	690541.8550			203.1750	-0.020000
F-4	2520+55.5200	-8.0000	5392.3300	5392.3362	-8.0000	206.6500	441660.6895	690541.8511			206.6500	-0.020000
F-5	2520+58.9950	-8.0000	5392.2658	5392.2723	-8.0000	210.1250	441664.1645	690541.8472			210.1250	-0.020000
F-6	2520+62.4700	-8.0000	5392.2011	5392.2073	-8.0000	213.6000	441667.6395	690541.8434			213.6000	-0.020000
F-7	2520+65.9450	-8.0000	5392.1359	5392.1411	-8.0000	217.0750	441671.1145	690541.8395			217.0750	-0.020000
F-8	2520+69.4200	-8.0000	5392.0703	5392.0739	-8.0000	220.5500	441674.5895	690541.8356			220.5500	-0.020000
F-9	2520+72.8950	-8.0000	5392.0042	5392.0060	-8.0000	224.0250	441678.0645	690541.8317			224.0250	-0.020000
BRG ABUT 1	2520+76.3700	-8.0000	5391.9376	5391.9376	-8.0000	227.5000	441681.5395	690541.8279	-8.0000	0 00 00.00	227.5000	-0.020000
BF ABUT 1	2520+78.3700	-8.0000	5391.8991	0.0000	-8.0000	229.5000	441683.5394	690541.8257	-8.0000	0 00 00.00	229.5000	-0.020000

LONGITUDINAL LINE: CL EXISTING GIDER — PARALLEL TO HORIZONTAL CONTROL — AT FINISHED GRADE

BENT LINE	STATION	OFFSET	ELEVATION	ELEV+DL	X	Y	NORTHING	EASTING	BENT LNTH	SKEW	GIRDER LNTH	CRS-SLP
BF ABUT 5	2518+46.8700	1.5000	5395.5208	0.0000	1.5000	-2.0000	441452.0502	690551.5834	1.5000	0 00 00.00	-2.0000	+0.020000
BRG ABUT 5	2518+48.8700	1.5000	5395.5001	0.0000	1.5000	0.0000	441454.0502	690551.5812	1.5000	0 00 00.00	0.0000	+0.020000
F-1	2518+53.1450	1.5000	5395.4552	0.0000	1.5000	4.2750	441458.3252	690551.5764			4.2750	+0.020000
F-2	2518+57.4200	1.5000	5395.4095	0.0000	1.5000	8.5500	441462.6002	690551.5717			8.5500	+0.020000
F-3	2518+61.6950	1.5000	5395.3632	0.0000	1.5000	12.8250	441466.8752	690551.5669			12.8250	+0.020000
F-4	2518+65.9700	1.5000	5395.3162	0.0000	1.5000	17.1000	441471.1502	690551.5622			17.1000	+0.020000
F-5	2518+70.2450	1.5000	5395.2684	0.0000	1.5000	21.3750	441475.4252	690551.5574			21.3750	+0.020000
F-6	2518+74.5200	1.5000	5395.2200	0.0000	1.5000	25.6500	441479.7002	690551.5526			25.6500	+0.020000
F-7	2518+78.7950	1.5000	5395.1708	0.0000	1.5000	29.9250	441483.9752	690551.5479			29.9250	+0.020000
F-8	2518+83.0700	1.5000	5395.1209	0.0000	1.5000	34.2000	441488.2501	690551.5431			34.2000	+0.020000
F-9	2518+87.3450	1.5000	5395.0704	0.0000	1.5000	38.4750	441492.5251	690551.5384			38.4750	+0.020000
CL PIER 4	2518+91.6200	1.5000	5395.0191	0.0000	1.5000	42.7500	441496.8001	690551.5336	1.5000	0 00 00.00	42.7500	+0.020000
F-1	2518+99.1200	1.5000	5394.9274	0.0000	1.5000	50.2500	441504.3001	690551.5252			50.2500	+0.020000
F-2	2519+06.6200	1.5000	5394.8336	0.0000	1.5000	57.7500	441511.8001	690551.5169			57.7500	+0.020000
F-3	2519+14.1200	1.5000	5394.7375	0.0000	1.5000	65.2500	441519.3001	690551.5085			65.2500	+0.020000
F-4	2519+21.6200	1.5000	5394.6393	0.0000	1.5000	72.7500	441526.8001	690551.5002			72.7500	+0.020000
F-5	2519+29.1200	1.5000	5394.5390	0.0000	1.5000	80.2500	441534.3001	690551.4918			80.2500	+0.020000
F-6	2519+36.6200	1.5000	5394.4364	0.0000	1.5000	87.7500	441541.8001	690551.4835			87.7500	+0.020000
F-7	2519+44.1200	1.5000	5394.3317	0.0000	1.5000	95.2500	441549.3001	690551.4751			95.2500	+0.020000
F-8	2519+51.6200	1.5000	5394.2248	0.0000	1.5000	102.7500	441556.8001	690551.4668			102.7500	+0.020000
F-9	2519+59.1200	1.5000	5394.1157	0.0000	1.5000	110.2500	441564.3001	690551.4584			110.2500	+0.020000
CL PIER 3	2519+66.6200	1.5000	5394.0044	0.0000	1.5000	117.7500	441571.8001	690551.4501	1.5000	0 00 00.00	117.7500	+0.020000
F-1	2519+74.1200	1.5000	5393.8910	0.0000	1.5000	125.2500	441579.3001	690551.4417			125.2500	+0.020000
F-2	2519+81.6200	1.5000	5393.7754	0.0000	1.5000	132.7500	441586.8001	690551.4334			132.7500	+0.020000
F-3	2519+89.1200	1.5000	5393.6576	0.0000	1.5000	140.2500	441594.3001	690551.4250			140.2500	+0.020000
F-4	2519+96.6200	1.5000	5393.5377	0.0000	1.5000	147.7500	441601.8001	690551.4167			147.7500	+0.020000
F-5	2520+04.1200	1.5000	5393.4155	0.0000	1.5000	155.2500	441609.3001	690551.4083			155.2500	+0.020000
F-6	2520+11.6200	1.5000	5393.2912	0.0000	1.5000	162.7500	441616.8001	690551.4000			162.7500	+0.020000
F-7	2520+19.1200	1.5000	5393.1647	0.0000	1.5000	170.2500	441624.3001	690551.3916			170.2500	+0.020000
F-8	2520+26.6200	1.5000	5393.0361	0.0000	1.5000	177.7500	441631.8001	690551.3833			177.7500	+0.020000
F-9	2520+34.1200	1.5000	5392.9053	0.0000	1.5000	185.2500	441639.3001	690551.3749			185.2500	+0.020000
CL PIER 2	2520+41.6200	1.5000	5392.7722	0.0000	1.5000	192.7500	441646.8001	690551.3666	1.5000	0 00 00.00	192.7500	+0.020000
F-1	2520+45.0950	1.5000	5392.7099	0.0000	1.5000	196.2250	441650.2750	690551.3627			196.2250	+0.020000
F-2	2520+48.5700	1.5000	5392.6471	0.0000	1.5000	199.7000	441653.7500	690551.3588			199.7000	+0.020000
F-3	2520+52.0450	1.5000	5392.5838	0.0000	1.5000	203.1750	441657.2250	690551.3550			203.1750	+0.020000
F-4	2520+55.5200	1.5000	5392.5200	0.0000	1.5000	206.6500	441660.7000	690551.3511			206.6500	+0.020000
F-5	2520+58.9950	1.5000	5392.4558	0.0000	1.5000	210.1250	441664.1750	690551.3472			210.1250	+0.020000
F-6	2520+62.4700	1.5000	5392.3911	0.0000	1.5000	213.6000	441667.6500	690551.3434			213.6000	+0.020000
F-7	2520+65.9450	1.5000	5392.3259	0.0000	1.5000	217.0750	441671.1250	690551.3395			217.0750	+0.020000
F-8	2520+69.4200	1.5000	5392.2603	0.0000	1.5000	220.5500	441674.6000	690551.3356			220.5500	+0.020000
F-9	2520+72.8950	1.5000	5392.1942	0.0000	1.5000	224.0250	441678.0750	690551.3317			224.0250	+0.020000
BRG ABUT 1	2520+76.3700	1.5000	5392.1276	0.0000	1.5000	227.5000	441681.5500	690551.3279	1.5000	0 00 00.00	227.5000	+0.020000
BF ABUT 1	2520+78.3700	1.5000	5392.0891	0.0000	1.5000	229.5000	441683.5500	690551.3256	1.5000	0 00 00.00	229.5000	+0.020000

LONGITUDINAL LINE: HCL, PGL & SEW CUT L — PARALLEL TO HORIZONTAL CONTROL — AT FINISHED GRADE

BENT LINE	STATION	OFFSET	ELEVATION	ELEV+DL	X	Y	NORTHING	EASTING	BENT LNTH	SKEW	GIRDER LNTH	CRS-SLP
BF ABUT 5	2518+46.8700	0.0000	5395.4908	0.0000	0.0000	-2.0000	441452.0485	690550.0834	0.0000	0 00 00.00	-2.0000	+/-.020000
BRG ABUT 5	2518+48.8700	0.0000	5395.4701	5395.4701	0.0000	0.0000	441454.0485	690550.0812	0.0000	0 00 00.00	0.0000	+/-.020000
F-1	2518+53.1450	0.0000	5395.4252	5395.4295	0.0000	4.2750	441458.3235	690550.0764			4.2750	+/-.020000
F-2	2518+57.4200	0.0000	5395.3795	5395.3882	0.0000	8.5500	441462.5985	690550.0717			8.5500	+/-.020000
F-3	2518+61.6950	0.0000	5395.3332	5395.3453	0.0000	12.8250	441466.8735	690550.0669			12.8250	+/-.020000
F-4	2518+65.9700	0.0000	5395.2862	5395.3006	0.0000	17.1000	441471.1485	690550.0622			17.1000	+/-.020000
F-5	2518+70.2450	0.0000	5395.2384	5395.2537	0.0000	21.3750	441475.4235	690550.0574			21.3750	+/-.020000
F-6	2518+74.5200	0.0000	5395.1900	5395.2044	0.0000	25.6500	441479.6985	690550.0526			25.6500	+/-.020000
F-7	2518+78.7950	0.0000	5395.1408	5395.1529	0.0000	29.9250	441483.9735	690550.0479			29.9250	+/-.020000
F-8	2518+83.0700	0.0000	5395.0909	5395.0996	0.0000	34.2000	441488.2485	690550.0431			34.2000	+/-.020000
F-9	2518+87.3450	0.0000	5395.0404	5395.0447	0.0000	38.4750	441492.5235	690550.0384			38.4750	+/-.020000
CL PIER 4	2518+91.6200	0.0000	5394.9891	5394.9891	0.0000	42.7500	441496.7985	690550.0336	0.0000	0 00 00.00	42.7500	+/-.020000
F-1	2518+99.1200	0.0000	5394.8974	5394.9340	0.0000	50.2500	441504.2985	690550.0252			50.2500	+/-.020000
F-2	2519+06.6200	0.0000	5394.8036	5394.8745	0.0000	57.7500	441511.7985	690550.0169			57.7500	+/-.020000
F-3	2519+14.1200	0.0000	5394.7075	5394.8063	0.0000	65.2500	441519.2985	690550.0085			65.2500	+/-.020000
F-4	2519+21.6200	0.0000	5394.6093	5394.7260	0.0000	72.7500	441526.7985	690550.0002			72.7500	+/-.020000
F-5	2519+29.1200	0.0000	5394.5090	5394.6318	0.0000	80.2500	441534.2985	690549.9918			80.2500	+/-.020000
F-6	2519+36.6200	0.0000	5394.4064	5394.5231	0.0000	87.7500	441541.7984	690549.9835			87.7500	+/-.020000
F-7	2519+44.1200	0.0000	5394.3017	5394.4004	0.0000	95.2500	441549.2984	690549.9751			95.2500	+/-.020000
F-8	2519+51.6200	0.0000	5394.1948	5394.2657	0.0000	102.7500	441556.7984	690549.9668			102.7500	+/-.020000
F-9	2519+59.1200	0.0000	5394.0857	5394.1223	0.0000	110.2500	441564.2984	690549.9584			110.2500	+/-.020000
CL PIER 3	2519+66.6200	0.0000	5393.9744	5393.9744	0.0000	117.7500	441571.7984	690549.9501	0.0000	0 00 00.00	117.7500	+/-.020000
F-1	2519+74.1200	0.0000	5393.8610	5393.8976	0.0000	125.2500	441579.2984	690549.9417			125.2500	+/-.020000
F-2	2519+81.6200	0.0000	5393.7454	5393.8164	0.0000	132.7500	441586.7984	690549.9334			132.7500	+/-.020000
F-3	2519+89.1200	0.0000	5393.6276	5393.7264	0.0000	140.2500	441594.2984	690549.9250			140.2500	+/-.020000
F-4	2519+96.6200	0.0000	5393.5077	5393.6243	0.0000	147.7500	441601.7984	690549.9167			147.7500	+/-.020000
F-5	2520+04.1200	0.0000	5393.3855	5393.5084	0.0000	155.2500	441609.2984	690549.9083			155.2500	+/-.020000
F-6	2520+11.6200	0.0000	5393.2612	5393.3779	0.0000	162.7500	441616.7984	690549.9000			162.7500	+/-.020000
F-7	2520+19.1200	0.0000	5393.1347	5393.2335	0.0000	170.2500	441624.2984	690549.8916			170.2500	+/-.020000
F-8	2520+26.6200	0.0000	5393.0061	5393.0771	0.0000	177.7500	441631.7984	690549.8833			177.7500	+/-.020000
F-9	2520+34.1200	0.0000	5392.8753	5392.9118	0.0000	185.2500	441639.2984	690549.8749			185.2500	+/-.020000
CL PIER 2	2520+41.6200	0.0000	5392.7422	5392.7422	0.0000	192.7500	441646.7984	690549.8666	0.0000	0 00 00.00	192.7500	+/-.020000
F-1	2520+45.0950	0.0000	5392.6799	5392.6817	0.0000	196.2250	441650.2734	690549.8627			196.2250	+/-.020000
F-2	2520+48.5700	0.0000	5392.6171	5392.6207	0.0000	199.7000	441653.7484	690549.8588			199.7000	+/-.020000
F-3	2520+52.0450	0.0000	5392.5538	5392.5590	0.0000	203.1750	441657.2234	690549.8550			203.1750	+/-.020000
F-4	2520+55.5200	0.0000	5392.4900	5392.4962	0.0000	206.6500	441660.6984	690549.8511			206.6500	+/-.020000
F-5	2520+58.9950	0.0000	5392.4258	5392.4323	0.0000	210.1250	441664.1734	690549.8472			210.1250	+/-.020000
F-6	2520+62.4700	0.0000	5392.3611	5392.3673	0.0000	213.6000	441667.6484	690549.8434			213.6000	+/-.020000
F-7	2520+65.9450	0.0000	5392.2959	5392.3011	0.0000	217.0750	441671.1234	690549.8395			217.0750	+/-.020000
F-8	2520+69.4200	0.0000	5392.2303	5392.2339	0.0000	220.5500	441674.5984	690549.8356			220.5500	+/-.020000
F-9	2520+72.8950	0.0000	5392.1642	5392.1660	0.0000	224.0250	441678.0734	690549.8317			224.0250	+/-.020000
BRG ABUT 1	2520+76.3700	0.0000	5392.0976	5392.0976	0.0000	227.5000	441681.5484	690549.8279	0.0000	0 00 00.00	227.5000	+/-.020000
BF ABUT 1	2520+78.3700	0.0000	5392.0591	0.0000	0.0000	229.5000	441683.5484	690549.8256	0.0000	0 00 00.00	229.5000	+/-.020000

Note: Elevations are at top of concrete deck (Finished Grade).

Positive Roadway Cross Slope is Upwards from the Profile Grade Line.

These Stations, Coordinates, Offsets and Lengths define the layout of the structure in a two dimensional horizontal plane. Elevations define the final grade of the finished concrete deck. Fabrication of structural components through the direct use of this information is not intended or advisable.

Sheet Revisions		
Date:	Comments	Init.

FELSBURG HOLT & ULLEVIG
6300 South Syracuse Way, Suite 600, Centennial, CO 80111
303.721.1440, fax 303.721.0832, fhu@fhueng.com

AURORA

Colorado Department of Transportation
2000 S. Holly Street
Denver, Co 80222
Phone: 303-757-9350 FAX: 303-757-9004
Region 6 RJE

As Constructed
No Revisions:
Revised:
Void:

I-225/COLFAX - PHASE 3
I-225 OVER COLFAX AVENUE
BRIDGE DECK ELEVATIONS (2 OF 2)

Designer:	KMA	Structure Numbers	F-17-JK
Detailer:	RAD		
Sheet Subset:	BRIDGE	Subset Sheets:	B38 of 38

Project No./Code
STU 2254-082
17718
Sheet Number 79

Design			Detail			Quantities		
	INITIAL	DATE		INITIAL	DATE		INITIAL	DATE
Designed By	KMA	12/09	Detailed By	RAD	12/09	Quantities By		
Checked By			Checked By	PRS	12/09	Checked By		

Revision Dates (Preliminary Stage Only)
MM/YY

MAR. 2011 211007 79

soeliner 9:16:17 AM L:\09004\14493\Phase 3\Bridge\Drawings\14493BRDG_PH3_F-17-JK_Colfax_DeckElevs02.dgn
3/15/2011 CDOT-PDFDraftQuality_XM.pltcfg *