AS CONSTRUCTED		
NO REVISIONS	REVISED	VOID

FEDERAL ROAD REGION NO.	DIVISION	PROJECT NUMBER	SHEET NUMBER
V	COLORADO	CC 12-0070-06	253

CITY & COUNTY of DENVER

DENVER INTERNATIONAL AIRPORT

GENERAL NOTES

All work shall be done according to the Standard Specifications and Special Provisions of the Division of Highways, State of Colorado applicable to the project.

Structure excavation and backfill shall be in accordance with Standard M-206-2 and these plans.

For Structure Number installation, See Standard S-614-12.

Expansion Joint Material shall meet AASHTO Specification M-213.

All exposed structural steel surfaces shall be painted. Painting will not be paid for separately and shall be included in the work. The color shall be dark brown, Federal color #30108.

All Structural steel shall be AASHTO M-233 (ASTM A-572-Grade 50) unless otherwise noted.

All bolts shall be $\frac{7}{8}$" dia. ASTM A-325 high strength bolts (AASHTO M-164) Type 3, unless noted otherwise. Girder Splices shall be AASHTO Surface Class B. Bolt spacing and edge distances shall conform to AASHTO specifications.

No welding of any kind shall be permitted on the flanges of steel girders unless specifically called for on the plans.

All exposed concrete surfaces down to 1'-0" below finished grade, shall receive a color coating as per Section 601 - Structural Concrete Coating and as shown on these plans. The color shall be light brown, Federal color #33531.

Concrete deck soffit surfaces between girder shall be painted. Painting will not be paid for seperately and shall be included in the work. The color shall be dark brown, Federal color #30108.

Grooved pattern finish shall not be paid for seperately but shall be included in the cost of Item 601 - Concrete Class A (Bridge).

All reinforcing steel shall be Grade 60. Epoxy coating is required for all reinforcing bars except footings.

The following table gives the minimum splice lengths for reinforcing bars unless shown or noted otherwise.

BAR SIZE	#4	#5	#6	#7	#8	#9	#10	#11
CLASS A CONCRETE	1'-3"	1'-6"	2'-0"	2'-8"	3'-6"	4'-5"	5'-7"	6'-10"
CLASS D CONCRETE	1'-3"	1'-6"	1'-10"	2'-2"	2'-10"	3'-7"	4'-7"	5'-7"

The Contractor shall be responsible for the stability of the structure during construction.

The information shown on these plans concerning the type and location of underground utilities is not guaranteed to be accurate or all-inclusive. The contractor is responsible for making his own determination as to the type and location of underground utilities as may be necessary to avoid damage to them.

Abbreviations:

e.f. = each face
n.f. = near face
f.f. = far face
U.N.O. = unless noted otherwise
t.f. = top face
b.f. = bottom face
(N) = non-epoxy coated

SUMMARY OF QUANTITIES

	Item No.	Description	Unit	Super Structure	Abut. 1	Abut. 2	Total
	206	Structure Excavation	CY		567	320	887
	206	Structure Backfill (Class 1)	CY		2,150	1,519	3,669
	502	Steel Piling (HP 12 x 74)	LF		3,958	3,528	7,486
	507	Concrete Slope & Ditch Paving (Reinf.)	CY		7	5	12
1	509	Structural Steel	LB	326,825			326,825
	512	Bearing Device (Type 1)	EACH	10			10
	515	Concrete Sealer	SY	696			696
	518	Bridge Expansion Device (0-4 Inch)	LF	174			174
	601	Concrete Class A (Bridge)	CY		441	337	778
2	601	Concrete Class D (Bridge)	CY	211			211
	601	Structural Concrete Coating	SY	336	251	171	758
	602	Reinforcing Steel	LB		17,190	15,110	32,300
3	602	Reinforcing Steel (Epoxy Coated)	LB	51,185	36,755	29,645	117,585
	603	6 Inch Plastic Pipe	LF		73	58	131
4	605	6 Inch Perforated Pipe Underdrain	LF		90	82	172
	606	Bridge Rail Type 4 Special	LF	399			399
	613	$1\frac{1}{2}$ Inch Electrical Conduit	LF	60			60
	613	2 Inch Electrical Conduit	LF	407			407

1. Includes 846 LB ASTM A36 Structural Steel for Bearing Devices
2. Includes 55 CY Concrete Class D (Bridge) for Approach Slabs
3. Includes 9065 LB Reinforcing Steel (Epoxy Coated) for Approach Slabs
4. Includes the cost of Wrapping Underdrain with Filter Fabric

DESIGN DATA

1989 and Iterim AASHTO Specifications. Working Stress Design Method. Seismic Category A.

Live Load: AASHTO HS20-44 & Interstate Alternate, Colorado Legal Loads and Colorado Permit Vehicle

Dead Load: Future Wearing Surface - 24 p.s.f.
Allowance for Stay-in-Place Forms - 12 p.s.f.

Reinforced Concrete:
All bars: fs = 24,000 p.s.i., fy = 60,000 p.s.i.
Concrete Class A: fc = 1200 p.s.i, f'c = 3000 p.s.i.
Concrete Class D: fc = 1800 p.s.i., f'c = 4500 p.s.i.

Structural Steel:
AASHTO M223 (ASTM A572 Grade 50): fs = 27,000 p.s.i.
fy = 50,000 p.s.i. (unless otherwise noted).

CROSS REFERENCE DRAWING NUMBER

SECTION OR DETAIL IDENTIFICATION

INDEX OF DRAWINGS

Drawing No.	Description
B-1	GENERAL INFORMATION AND SUMMARY OF QUANTITIES
B-2	GENERAL LAYOUT
B-3	ENGINEERING GEOLOGY
B-4	CONSTRUCTION LAYOUT
B-5	FOOTING AND PILING LAYOUT
B-6	ABUTMENT 1 PLAN & ELEVATION
B-7	ABUTMENT 2 PLAN & ELEVATION
B-8	ABUTMENT DETAILS
B-9	FRAMING PLAN AND GIRDER ELEVATION
B-10	GIRDER DETAILS AND CROSS FRAMES
B-11	DECK PLAN AND CROSS SECTION
B-12	DECK DETAILS AND DEAD LOAD DEFLECTIONS
B-13	BEARING DETAILS
B-14	BRIDGE EXPANSION DEVICE
B-15	BRIDGE RAIL TYPE 4 (SPECIAL)
B-16	SLOPE PAVING DETAILS
B-17	APPROACH SLAB DETAILS
B-18	BRIDGE DECK ELEVATIONS
B-19	BRIDGE DECK ELEVATIONS
B-20	ROADWAY APPROACHES
B-21	BENCHMARK

GERNOT D. APPELT REGISTERED PROFESSIONAL ENGINEER STATE OF COLORADO

BRIDGE DESCRIPTION

Single Span (149'-$7\frac{3}{8}$") Bridge, Weld Steel Plate-Girders, Composite, 33'-0" Roadway Barrier to Barrier, Bridge Rail Type 4 (Special)
W.B. I-70 Off Ramp at Chambers Road over Airport Boulevard Outbound.

MEHEEN ENGINEERING CORPORATION

STATION 7385+52.66 TO STATION 7387+11.41		STRUCTURE NUMBER	E-17-RS
NEAR DENVER SEC 20 T3S R66W		DRAWING NUMBER B-1 OF 21	
ISSUE RECORD NO. BY PURPOSE DATE CKD	DATE DE91	FAA AIP NO:	SHEET TITLE GENERAL INFORMATION AND SUMMARY OF QUANTITIES
	DESIGNED BY D. Henkle	WORK BREAKDOWN NO. 13CCA	
	DRAWN BY G. Wall	DESIGN CONTRACT NO. E154A	SHEET NO. CO OF
	CHECKED BY G. Appelt	CONST. CONTRACT NO. F154A	
		PROJECT NO.	CADD FILE NO. X-13CCA-E154A-F154A-B-2-CO -#A
		VOLUME NO. 1	

INITIAL	DATE	Checked By	INITIAL	DATE	Checked By
D.B.H.	SE91	G.D.A. SE91	D.B.H.	SE91	G.D.A. SE91
D.B.H.	SE91	U.A.W. SE91	D.B.H.	SE91	U.A.W. SE91
G.D.A.	SE91	Quantities By	G.D.A.	SE91	Quantities By
G.D.A.	SE91	Checked By	G.D.A.	SE91	Checked By

Designed By
Detailed By
Checked By

DRAWING NAME: GEN2
PLOTTING SCALE: 1=1
PLOTTING DATE: SE91

AS CONSTRUCTED			
NO REVISIONS		REVISED	VOID

FEDERAL ROAD REGION NO.	DIVISION	PROJECT NUMBER	SHEET NUMBER
V	COLORADO	CC 12-0070-06	254

CITY & COUNTY of DENVER

DENVER INTERNATIONAL AIRPORT

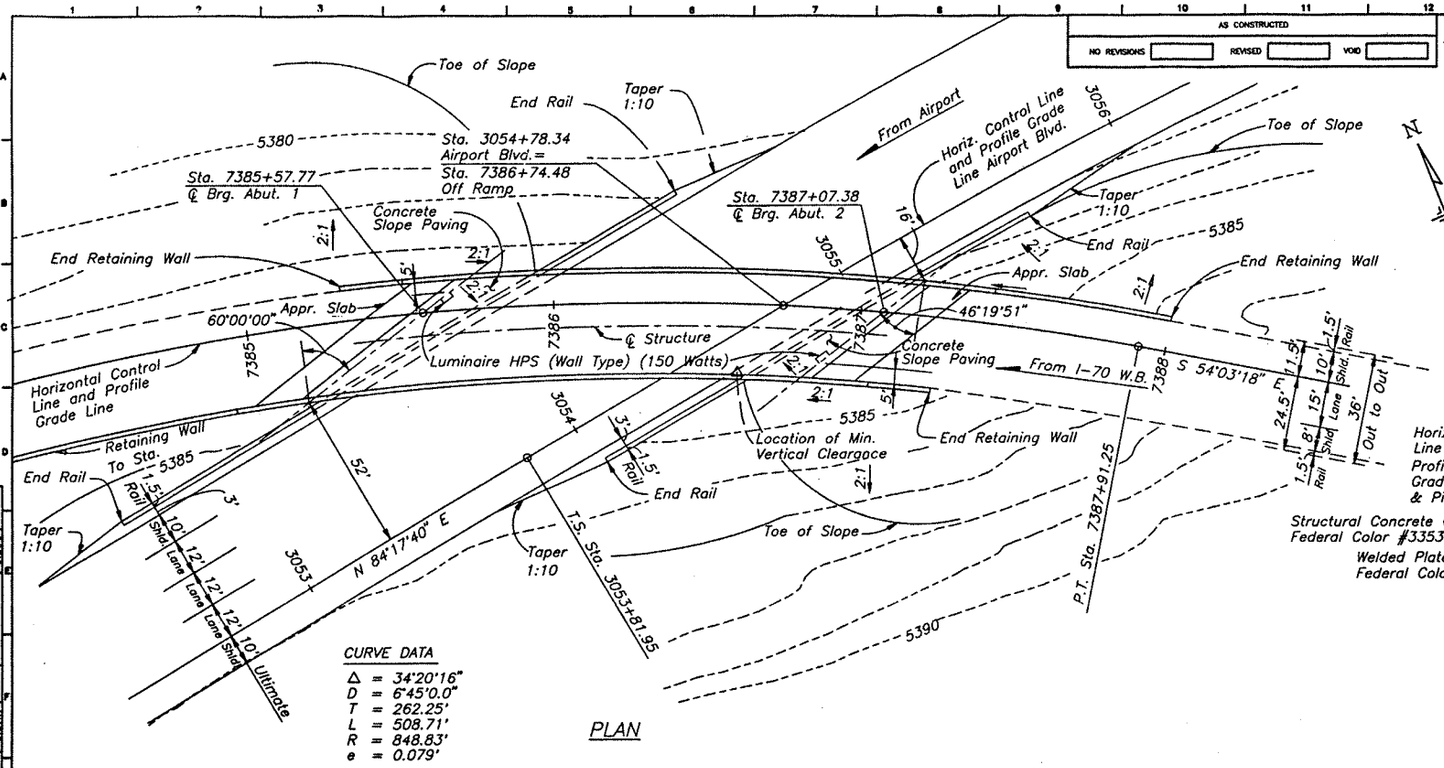

CURVE DATA

Δ = 34°20'16"
D = 6°45'0.0"
T = 262.25'
L = 508.71'
R = 848.83'
e = 0.079'

PLAN

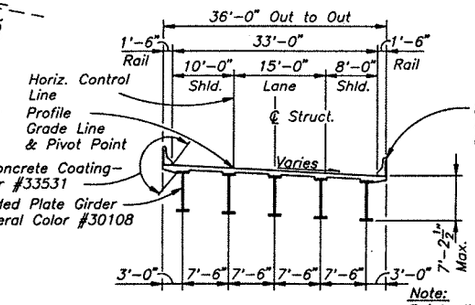

Note:
Paint all Concrete Deck Soffit Surfaces— Federal Color #30108.

TYPICAL SECTION

(Perpendicular to Horiz. Control Line, Looking Ahead Station)

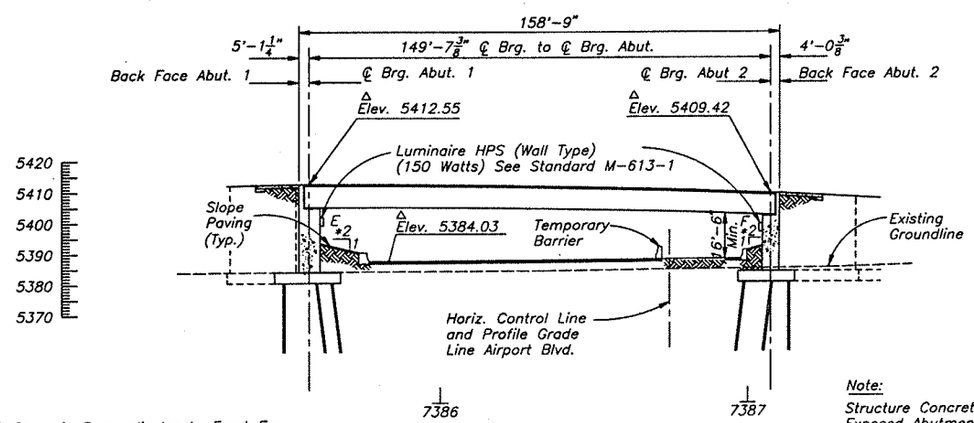

* 2:1 Slope is Perpendicular to Front Face of Abutment.

LONGITUDINAL SECTION

Taken at Horiz. Control Line and Profile Grade Line
Δ All Elevations Shown at Finished Grade

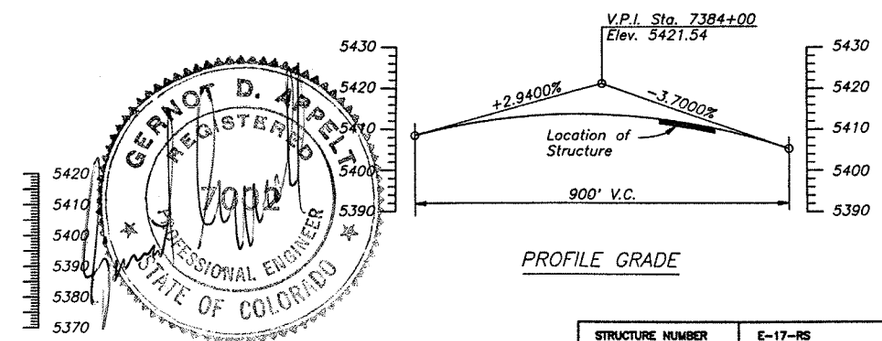

PROFILE GRADE

GERNOT D. APPELT REGISTERED PROFESSIONAL ENGINEER STATE OF COLORADO

Note:
Structure Concrete Coating on All Exposed Abutment Concrete to 1'-0" Below Finished Grade, Federal Color #33531.

Live Loading HS20-44 and Interstate Alternate.

MEHEEN ENGINEERING CORPORATION

ISSUE RECORD NO. BY PURPOSE DATE CKD	DATE DE91	FAA AIP NO:	SHEET TITLE GENERAL LAYOUT
	DESIGNED BY: D. Henkle	WORK BREAKDOWN NO. 13CCA	
	DRAWN BY: G. Wall	DESIGN CONTRACT NO. E154A	SHEET NO.
	CHECKED BY: G. Appelt	CONST. CONTRACT NO. F154A	CO OF
		PROJECT NO.	CADD FILE NO. X-13CCA-E154A-F154A-B-2-CO -#A
		VOLUME NO. 1	

STRUCTURE NUMBER E-17-RS

DRAWING NUMBER B-2 OF 21

Designed By	INITIAL D.B.H.	DATE SE91	Checked By	G.D.A. SE91
Checked By	G.D.A.	SE91	Quantities By	J.J.R. SE91
Detailed By	G.D.W.	SE91	Checked By	D.B.H. SE91
				G.D.A. SE91

DRAWING NAME: S1-002-A
PLOTTING SCALE: 1=20
PLOTTING DATE: SE91

AS CONSTRUCTED					
NO REVISIONS	REVISED	VOID	FEDERAL ROAD REGION NO.	DIVISION	PROJECT NUMBER	SHEET NUMBER
			V	COLORADO	CC 12-0070-06	263

CITY & COUNTY of DENVER

DENVER INTERNATIONAL AIRPORT

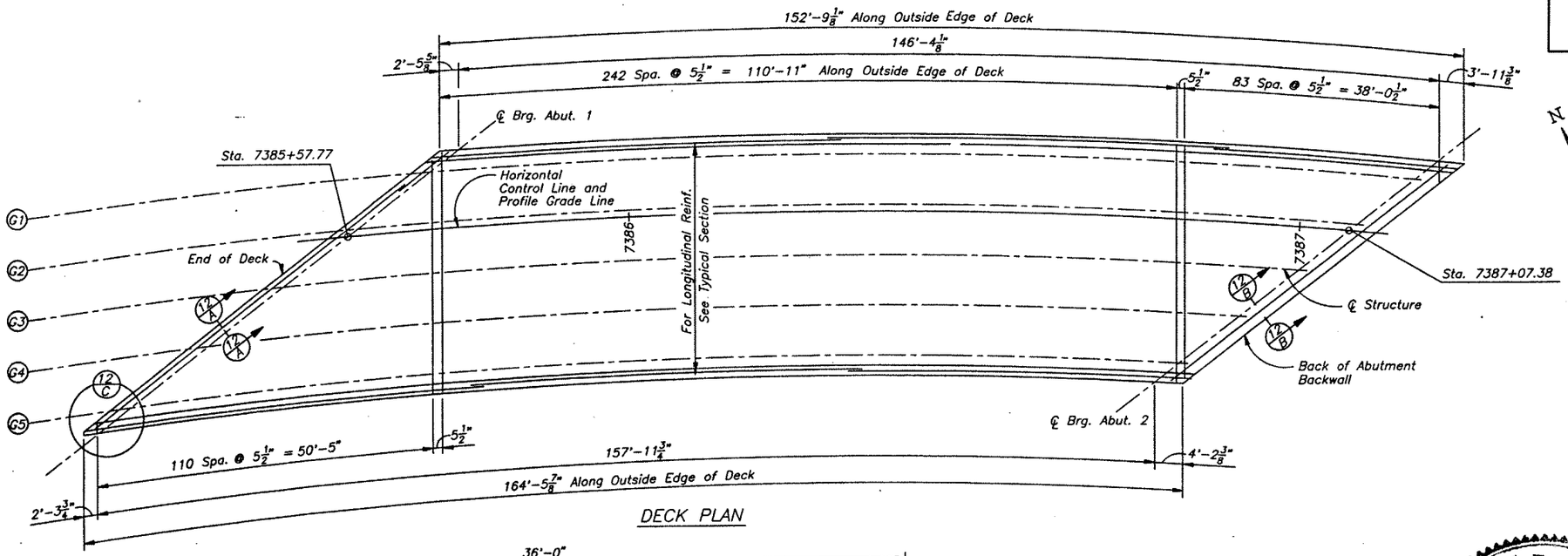

DECK PLAN

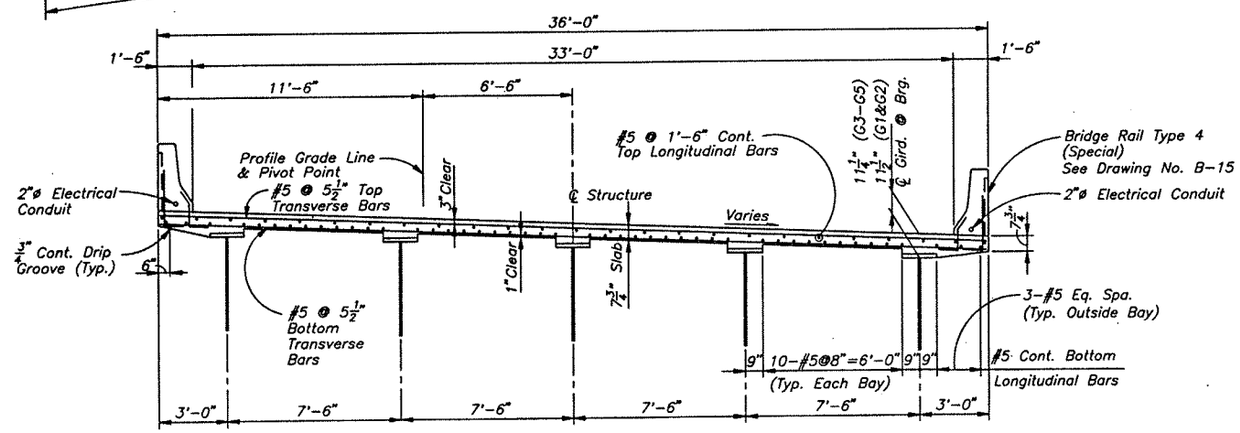

TYPICAL SECTION

(Perpendicular to Horiz. Control Line, Looking Ahead Station)

GERNOT D. APPELT
REGISTERED
PROFESSIONAL ENGINEER
STATE OF COLORADO

INITIAL	DATE		
Designed By	D.B.H.	SE91	Checked By G.D.A. MA91
Checked By	G.D.A.	SE91	Quantities By J.J.R. SE91
Detailed By	G.D.W.	SE91	Checked By D.B.H. SE91

DRAWING NAME: DECK2
PLOTTING SCALE: 1=96
PLOTTING DATE: SE91

MEHEEN ENGINEERING CORPORATION

ISSUE RECORD NO. BY PURPOSE DATE CKD	DATE DE91	STRUCTURE NUMBER E-17-RS	
	DESIGNED BY: D. Henkle	DRAWING NUMBER B-11 OF 21	
	DRAWN BY: G. Wall	FAA AIP NO:	SHEET TITLE DECK PLAN AND CROSS SECTION
	CHECKED BY: G. Appelt	WORK BREAKDOWN NO. 13CCA	
		DESIGN CONTRACT NO. E154A	SHEET NO.
		CONST. CONTRACT NO. F154A	CO OF
		PROJECT NO.	CADD FILE NO. X-13CCA-E154A-F154A-B-2-CO -#A
		VOLUME NO. 1	

AS CONSTRUCTED		
NO REVISIONS	REVISED	VOID

FEDERAL ROAD REGION NO.	DIVISION	PROJECT NUMBER	SHEET NUMBER
V	COLORADO	CC 12-0070-06	266

CITY & COUNTY of DENVER

DENVER INTERNATIONAL AIRPORT

Note:
L3x3x$\frac{1}{2}$ to Extend from Barrier to Barrier Only.

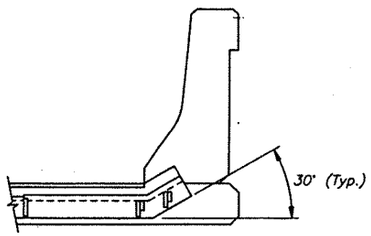

SECTION @ BARRIER

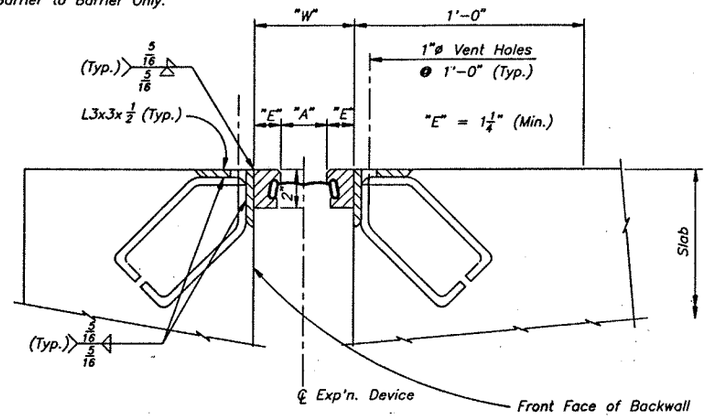

SECTION @ ABUTMENT

SECTIONS THRU BRIDGE EXPANSION DEVICE (0-4 INCH)

Section Taken Perpendicular to Exp'n. Device.

Movement	*Abut. 1
Perpendicular Range	1.0615"
Racking Range	1.9995"

* Based on ℄ Str. Length

Str. Temp.	"A" *
30°F	15/16"
40°F	1 7/8"
50°F	1 13/16"
60°F	1 3/4"
70°F	1 11/16"
80°F	1 9/16"
90°F	1 1/2"
100°F	1 7/16"

* Based on ℄ Str. Length

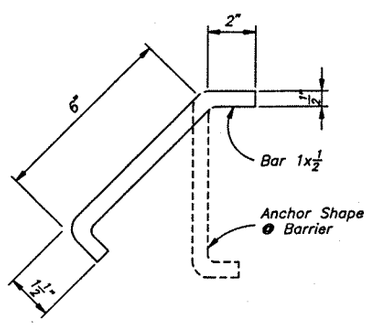

TYPICAL ANCHOR DETAIL

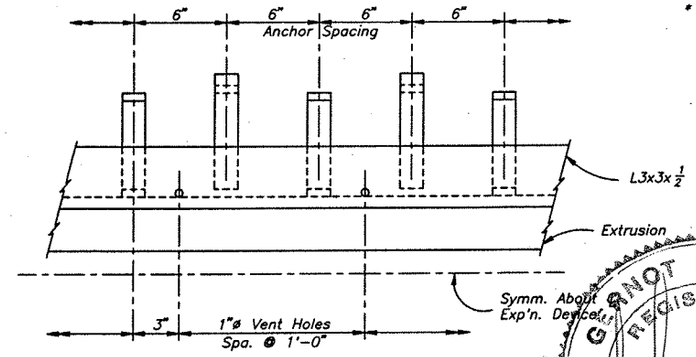

ANCHOR AND VENT HOLE SPACING

NOTES:

1. The Expansion Device Shall be Installed on Grade, Parallel to the Slope and Grade of the Deck.
2. After the Concrete has Attained Initial Set, the Attachments Used to Hold the Angle Assembly in its Proper Position Shall be Removed.
3. Do not Paint Steel Surfaces in Contact with Either Concrete or Seal.
4. "W" and "E" Dimensions are Dependent Upon the Particular Expansion Device Supplied, and Shall be Shown on the Shop Drawings.
5. The Shop Drawings Shall Indicate the "W" and "A" Dimensions at a Range of Temperatures from 30°F to 100°F Assuming a Mid-Point Temperature of 40°F.
6. Opening in the Barrier to be Constructed to the Exact Width of the Existing Deck Opening.
7. The Neoprene Extrusion Shall be One Piece.
8. Vent Holes Shall not be Used for Support Bolts.
9. Values of Movement given in the Table are Maximum Ranges for the Expansion Device. The Expansion Device Supplier Shall Supply Certification that the Supplied Device will Tolerate the Maximum Ranges of Movements prior to Approval by the Engineer.

ACCEPTABLE ALTERNATES

Wabo-S-400
Onflex 40-Seq
D.S. Brown SS-400, SSA-400
Epoxy Brg. Ind. BS-400-A
Lenco L400 Type W

INITIAL	DATE	Checked By	G.D.A.	SE91
D.B.H.	SE91	Quantities By	A.M.L.	SE91
G.D.A.	SE91	Checked By	D.B.H.	SE91
A.M.L.	SE91		G.D.A.	SE91

Designed By / Checked By / Detailed By

GANOT D. APPELT REGISTERED PROFESSIONAL ENGINEER STATE OF COLORADO

MEHEEN ENGINEERING CORPORATION

ISSUE RECORD NO. BY PURPOSE DATE CKD	DATE DE91	STRUCTURE NUMBER E-17-RS
	DESIGNED BY: D. Henkle	DRAWING NUMBER B-14 OF 21
	DRAWN BY: A. Lang	FAA AP NO: .
	CHECKED BY: G. Appelt	WORK BREAKDOWN NO. 13CCA
		DESIGN CONTRACT NO. E154A
		CONST. CONTRACT NO. F154A
		PROJECT NO.
		VOLUME NO. 1
		SHEET TITLE BRIDGE EXPANSION DEVICE
		SHEET NO. CO OF
		CADD FILE NO. X-13CCA-E154A-F154A-B-2-CO -#A

DRAWING NAME: EXPDEV2
PLOTTING SCALE: 1=4
PLOTTING DATE: SE91

AS CONSTRUCTED				FEDERAL ROAD REGION NO.	DIVISION	PROJECT NUMBER	SHEET NUMBER	CITY & COUNTY of DENVER
NO REVISIONS	REVISED	VOID		V	COLORADO	CC 12-0070-06	269	DENVER INTERNATIONAL AIRPORT

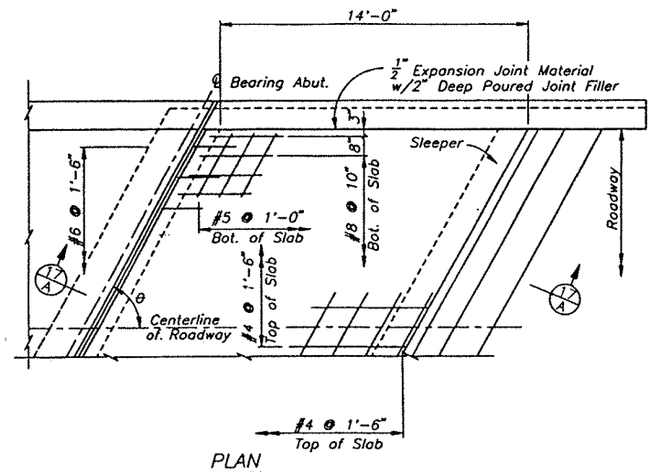

PLAN

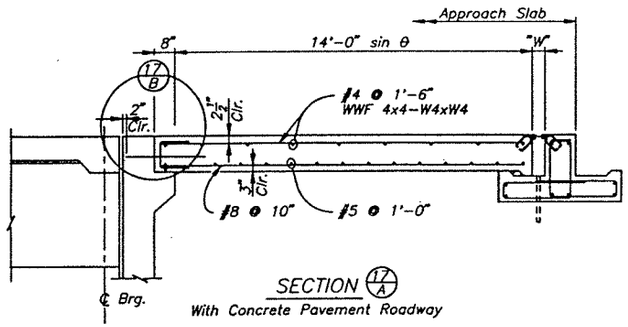

SECTION 17/A

With Concrete Pavement Roadway

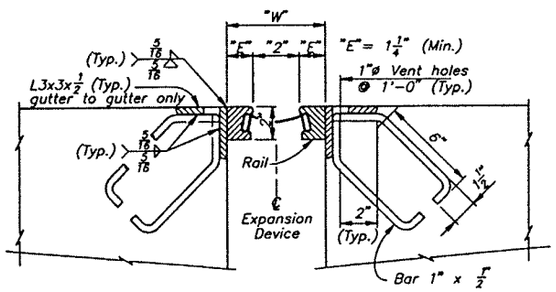

SECTION THRU BRIDGE EXPANSION DEVICE

Section taken perpendicular to ℄ expansion device.

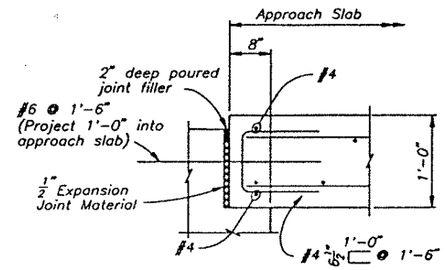

DETAIL 17/B

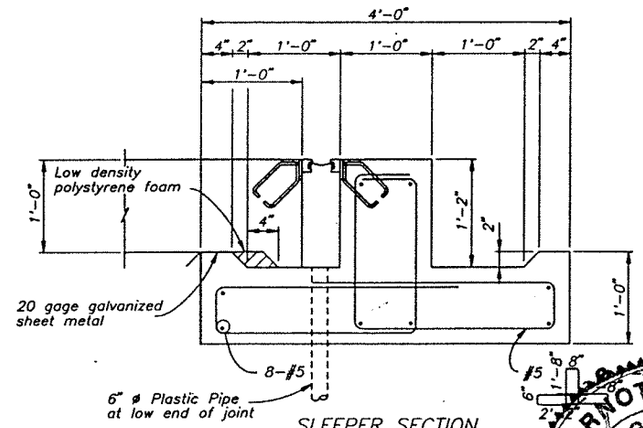

SLEEPER SECTION

Taken normal to expansion device
Sleeper may be precast.

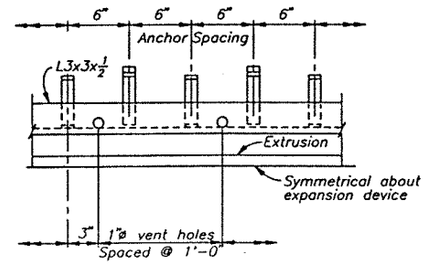

ANCHOR AND VENT HOLE SPACING

GENERAL NOTES:

Concrete for approach slab shall be Class D.

1/2" Expansion Joint Material shall meet AASHTO Specification M213.

The expansion device shall be installed on grade, parallel to the slope and grade of the approach slab.

After the concrete has attained initial set, the attachments used to hold the angle assembly in its proper position shall be removed.

Do not paint steel surfaces in contact with concrete and expansion device.

"W" and "E" dimensions are dependent upon the particular expansion device supplied, and shall be shown on the shop drawings.

The neoprene extrusion shall be one piece.

Vent holes shall not be used for support bolts.

See Special Provisions for epoxy grouting of vent holes.

ACCEPTABLE ALTERNATES

WABO-S-400
ONFLEX 40-SEQ
D.S. BROWN SS-400, SSA-400
EPOXY BRG. IND. BS-400-A
LENCO L400 TYPE W

GERNOT D. APPELT
REGISTERED
7002
PROFESSIONAL ENGINEER
STATE OF COLORADO

INITIAL	DATE	Checked by	C.D.A.	SE91
D.B.H.	SE91	Quantities by	J.J.R.	SE91
C.D.A.	SE91	Checked by	D.B.H.	SE91
A.M.L.	SE91		C.D.A.	SE91
Designed by				
Checked by				
Detailed by				

DRAWING NAME: APPR2
PLOTTING SCALE: 1=1
PLOTTING DATE: SE91

MEHEEN ENGINEERING CORPORATION

ISSUE RECORD NO. BY PURPOSE DATE CKD	DATE DE91	FAA AIP NO:	SHEET TITLE APPROACH SLAB DETAILS
	DESIGNED BY: D. Henkle	WORK BREAKDOWN NO. 13CCA	SHEET NO. CO OF
	DRAWN BY: A. Lang	DESIGN CONTRACT NO. E154A	CADD FILE NO. X-13CCA-E154A-F154A-B-2-CO -#A
	CHECKED BY: G. Appelt	CONST. CONTRACT NO. F154A	
		PROJECT NO.	
		VOLUME NO. 1	

STRUCTURE NUMBER	E-17-RS
DRAWING NUMBER B-17 OF 21	