AS CONSTRUCTED		
NO REVISIONS	REVISED	VOID

FED. ROAD REGION	DIVISION	PROJ. NO.	SHEET NO.	TOTAL SHEETS
VIII	COLO.	CC 12-0070-06	274	

CITY & COUNTY of DENVER

DENVER INTERNATIONAL AIRPORT

GENERAL NOTES

Structure excavation and backfill shall be in accordance with Standard M-206-2 and these plans.

For Structure Number installation, See Standard S-614-12.

Expansion Joint Material shall meet AASHTO Specification M-213.

All exposed structural steel surfaces shall be painted. The color shall be Dark Brown equivalent to Federal Color No. 30108.

The following structural steel shall be AASHTO M-223 (ASTM A-572 Grade 50): Girder flange and Web plates, and Splice plates

The following structural steel shall be AASHTO M-183 (ASTM A-36): Gusset plates, Diaphragms, Stiffeners, Bearing Stiffeners and Piling

All bolts shall be 7/8" dia. ASTM A-325 high strength bolts (AASHTO M-164) unless otherwise noted. Bolt spacing and edge distances shall conform to AASHTO specifications.

No welding of any kind shall be permitted on the flanges of steel girders unless specifically called for on the plans.

Exposed concrete surfaces, down to 1'-0" below finished grade, shall receive a color coating as per Section 601 - Structural Concrete Coating. The colors shall be Dark Brown equivalent to Federal Color No. 30108 and Light Brown equivalent to Federal Color No. 33531 as shown on these Plans. Abutments, Retaining Walls and Slope Paving shall be Light Brown Color equivalent to Federal Color No. 33531.

All reinforcing steel shall be Grade 60. Epoxy coating is required for all reinforcing bars except in footings, or otherwise shown.

The following table gives the minimum splice lengths for reinforcing bars unless shown or otherwise noted.

Bar Size	#4	#5	#6	#7	#8	#9	#10	#11
Class D Concrete	1'-3"	1'-6"	1'-10"	2'-2"	2'-10"	3'-7"	4'-7"	5'-7"
Class A Concrete	1'-3"	1'-6"	2'-0"	2'-8"	3'-6"	4'-5"	5'-7"	6'-10"

The Contractor shall be responsible for the stability of the Structure during construction.

Permanent Steel Deck Forms are required between girders. They shall not be used on the cantilever portions of the deck. All exposed surfaces of the Steel Deck Forms shall be painted. The color shall be Dark Brown eqivalent to Federal Color No. 30108.

The information shown on these plans concerning the type and location of underground utilities is not guaranteed to be accurate or all inclusive. The contractor is responsible for making his own determination as to the type and location of underground utilities as may be necessary to avoid damage to them.

	INITIAL	DATE		INITIAL	DATE
Designed By	LDR	5-91	Checked By	DWB	7-91
Checked By	DWB	7-91	Downfiles By	LDR	7-91
Detailed By	RJO	8-91	Checked By	GJO	8-91
				RJO	8-91

DESIGN DATA

DESIGN:	AASHTO 1989 and Interim Specifications
DESIGN METHOD:	Working Stress Design Load Factor Design for Pier Columns
LIVE LOAD:	AASHTO HS20-44 & Interstate Alternate, Colorado Legal Loads and Colorado Permit Vehicle
DESIGN CYCLES:	2,000,000 Truck Load 500,000 Lane Load
DEAD LOAD:	Concrete - 150 PCF Future Wearing Surface - 24 PSF Allowance for stay-in-place Forms - 12 PSF
REINFORCED CONCRETE:	Reinforcing Steel: fy = 60,000 p.s.i., fs = 24,000 p.s.i. Concrete Class A: f'c = 3000 p.s.i., fc = 1200 p.s.i. Concrete Class D: f'c = 4500 p.s.i., fc = 1800 p.s.i.
STRUCTURAL STEEL:	AASHTO M223 (ASTM A-572 Grade 50): fs=27,000 p.s.i. AASHTO M183 (ASTM A-36): fs = 20,000 p.s.i.

B- Cross Reference Drawing Number

Section or Detail Identification

SUMMARY OF QUANTITIES

	Item No.	Description	Unit	Super-structure	Abut. 1	Pier 2	Pier 3	Pier 4	Abut. 5	Total
	206	Structure Excavation	CY			1255	892	689		2836
	206	Structure Backfill (Class 1)	CY		1828				1026	2854
	206	Structure Backfill (Class 2)	CY			1113	776	587		2476
	206	Filter Material (Class B)	CY		22				11	33
	502	Steel Piling (HP 12x53)	LF		1755				889	2644
	502	Steel Piling (HP 12x74)	LF		2808	2453	1900	1568	1610	10339
	507	Concrete Slope & Ditch Paving (Reinf.)	CY		68				64	132
4	509	Structural Steel	LB	1707690						1707690
	512	Bearing Device (Type III)	Each	40						40
	515	Concrete Sealer	SY	4380						4380
	518	Waterstop (6-Inch)	LF		24				20	44
	518	Bridge Expansion Device (0-4 Inch)	LF	452						452
	601	Concrete Class A (Bridge)	CY		481				276	757
1	601	Concrete Class D (Bridge)	CY	1184		302	251	219		1956
	601	Structural Concrete Coating	SY	1339	804	365	323	269	647	3747
	602	Reinforcing Steel	LB		25355	13615	10330	10480	11205	70985
2	602	Reinforcing Steel (Epoxy Coated)	LB	348120	27325	51935	41865	35045	15330	519620
	603	6 Inch Plastic Pipe	LF		88				86	174
3	605	6 Inch Perforated Pipe Underdrain	LF		291				180	471
	606	Bridge Rail Type 4 Special	LF	1435.5						1435.5
	607	Fence Chain Link (Special) (36 Inch)	LF	1215.0						1215.0
	613	1 1/4 Inch Electrical Conduit	LF			102	107	112		321
	613	2 Inch Electrical Conduit	LF	1436						1436

1. Includes 168 Cu. Yds. Concrete Class D (Bridge) for Approach Slabs
2. Includes 38,020 Lbs. Reinforcing Steel (Epoxy Coated) for Approach Slabs
3. Items 605-6 inch Perforated Pipe Underdrain includes the Cost of Wrapping Underdrain with Filter Fabric
4. Includes 263150 Lbs. ASTM A-36 Steel

ABBREVIATIONS:

E.F. = Each Face	T.F. = Top Face
N.F. = Near Face	B.F. = Bottom Face
F.F = For Face	(N) = Non-epoxy Coated
	U.N.O. = unless otherwise noted

COLORADO REGISTERED PROFESSIONAL ENGINEER
LAWRENCE REASCH
26401
2-2-93

CH2M HILL

INDEX OF DRAWINGS

DWG NO. B-1	GENERAL INFORMATION AND SUMMARY OF QUANTITIES
DWG NO. B-2	GENERAL LAYOUT
DWG NO. B-3	GENERAL LAYOUT
DWG NO. B-4	TYPICAL SECTIONS
DWG NO. B-5	ENGINEERING GEOLOGY
DWG NO. B-6	ENGINEERING GEOLOGY
DWG NO. B-7	CONSTRUCTION LAYOUT
DWG NO. B-8	FOOTING AND PILING LAYOUT
DWG NO. B-9	FOOTING AND PILING LAYOUT
DWG NO. B-10	FOOTING AND PILING LAYOUT
DWG NO. B-11	ABUTMENT 1 - PLAN & ELEVATION
DWG NO. B-12	ABUTMENT 1 - PLAN & ELEVATION
DWG NO. B-13	ABUTMENT 5 - PLAN & ELEVATION
DWG NO. B-14	ABUTMENT DETAILS
DWG NO. B-15	WINGWALL ELEVATIONS
DWG NO. B-16	WINGWALL DETAILS
DWG NO. B-17	ABUTMENT 1 RETAINING WALLS 'A' & 'B'
DWG NO. B-18	ABUTMENT 5 RETAINING WALLS 'C' & 'D'
DWG NO. B-19	RETAINING WALL DETAILS
DWG NO. B-20	PIER 2 - PLAN & ELEVATION
DWG NO. B-21	PIER 2 - PLAN & ELEVATION
DWG NO. B-22	PIER 3 - PLAN & ELEVATION
DWG NO. B-23	PIER 4 - PLAN & ELEVATION
DWG NO. B-24	PIER DETAILS
DWG NO. B-25	FRAMING PLAN & GIRDER ELEVATION
DWG NO. B-26	FRAMING PLAN & GIRDER ELEVATION
DWG NO. B-27	GIRDER DETAILS
DWG NO. B-28	GIRDER DETAILS
DWG NO. B-29	GIRDER DETAILS
DWG NO. B-30	DEAD LOAD DEFLECTIONS
DWG NO. B-31	SUPERSTRUCTURE SECTION
DWG NO. B-32	ADDITIONAL DECK REINFORCING & POURING SEQUENCE
DWG NO. B-33	BEARING DEVICE (TYPE III)
DWG NO. B-34	BEARING DEVICE (TYPE III)
DWG NO. B-35	BRIDGE EXPANSION DEVICE (0-4 INCH)
DWG NO. B-36	BRIDGE EXPANSION DEVICE (0-4 INCH)
DWG NO. B-37	BRIDGE RAIL TYPE 4 (SPECIAL)
DWG NO. B-38	FENCE CHAIN LINK (SPECIAL)
DWG NO. B-39	SLOPE PAVING DETAILS
DWG NO. B-40	APPROACH SLAB
DWG NO. B-41	BRIDGE DECK ELEVATIONS
DWG NO. B-42	BRIDGE DECK ELEVATIONS
DWG NO. B-43	BRIDGE DECK ELEVATIONS
DWG NO. B-44	BRIDGE DECK ELEVATIONS
DWG NO. B-45	ROADWAY APPROACHES
DWG NO. B-46	BENCH MARK

BRIDGE DESCRIPTION

4 Span (170'-0 9/16", 180'-9 3/4", 149'-3 5/8", 119'-11 3/8") Bridge, Welded Plate Girders, Continuous and Composite

Airport Boulevard over I-70

56'-0" Roadway, Curb to Curb with varying skews, Bridge Rail Type 4 (Special)

Station 2069+00.41 to Station 2075+30.84		STRUCTURE NUMBERS	E-17-RT
Near Denver Sec 29 T3S R66W		DRAWING NUMBER B-1 OF 46	
ISSUE RECORD NO. BY PURPOSE DATE CKD	DATE DE91 DESIGNED BY: L. Reasch DRAWN BY: R. Olton CHECKED BY: B. Beome	FAA AIP NO: WORK BREAKDOWN NO. 13CCA DESIGN CONTRACT NO. E154A CONST. CONTRACT NO. F154A PROJECT NO. VOLUME NO. 1	SHEET TITLE GENERAL INFORMATION AND SUMMARY OF QUANTITIES SHEET NO. CO OF CADD FILE NO. X-13CCA-E154A-F154A-B-2-CO -#A

12-03-91
CB010-A.DWG
1=1.0

AS CONSTRUCTED							
NO REVISIONS		REVISED		VOID			

FED. ROAD REGION	DIVISION	PROJ. NO.	SHEET NO.	TOTAL SHEETS
VIII	COLO.	CC 12-0070-06	275	

CITY & COUNTY of DENVER

DENVER INTERNATIONAL AIRPORT

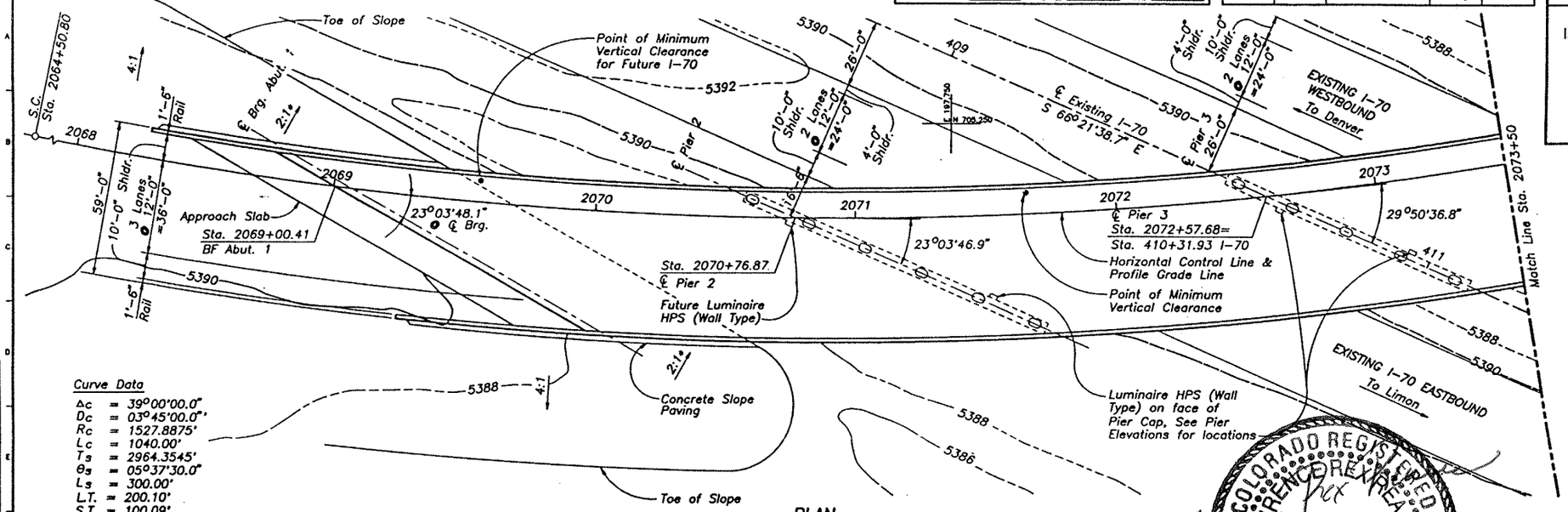

PLAN

Curve Data

Δc = 39°00'00.0"
D_c = 03°45'00.0"
R_c = 1527.8875'
L_c = 1040.00'
T_s = 2964.3545'
θ_s = 05°37'30.0"
L_s = 300.00'
L.T. = 200.10'
S.T. = 100.09'
SSD = 589'
MDS = 60 mph
e = 0.075'/ft.

	INITIAL	DATE		INITIAL	DATE
Designed By	LMR	7-91	Checked By	DWB	7-91
Checked By	DWB	7-91	Quantities By	LMR	7-91
Detailed By	RAD	8-91	Checked By	CJG	8-91
				RAD	8-91

COLORADO REGISTERED PROFESSIONAL ENGINEER LAWRENCE REASCH 26401

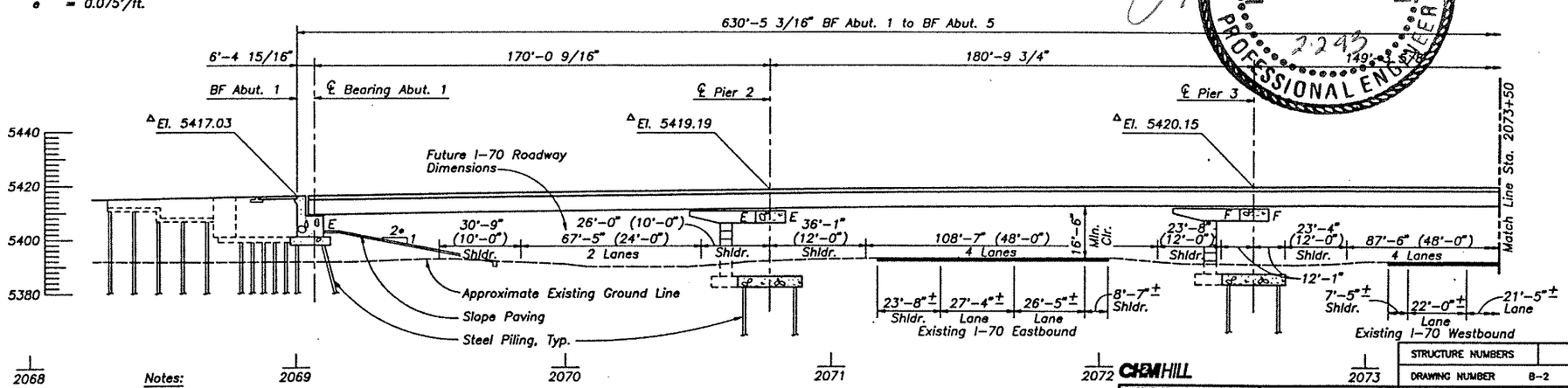

Notes:

1. Horizontal Control Line is the Horizontal Control Line for Inbound Airport Boulevard.
2. Δ Finished Roadway Elevation at Horizontal Control Line and Profile Grade Line
3. All dimensions on Longitudinal Section are measured along Horizontal Control Line
4. * 2:1 Slope is Perpendicular to the Front Face of Abutment.
5. For Profile Grade Diagram See Dwg. No. B-3.
6. Dimensions in ( ) are perpendicular to Centerline I-70.

LONGITUDINAL SECTION

(Taken along Horizontal Control Line)

Live Loading = HS-20-44 and Interstate Alternate

CH2M HILL

ISSUE RECORD NO. BY PURPOSE DATE CKD

DATE DE91
DRAWN BY: R. Dillon
DESIGNED BY: L. Reasch
CHECKED BY: B. Beome

STRUCTURE NUMBERS	E-17-RT
DRAWING NUMBER	B-2 OF 46
FAA AIP NO:	SHEET TITLE GENERAL LAYOUT 1 OF 2
WORK BREAKDOWN NO. 13CCA	SHEET NO.
DESIGN CONTRACT NO. E154A	CO OF
CONST. CONTRACT NO. F154A	CADD FILE NO. X-13CCA-E154A-F154A-B-2-CO -1A
PROJECT NO.	
VOLUME NO. 1	

AS CONSTRUCTED					
NO REVISIONS		REVISED		VOID	

FED. ROAD REGION	DIVISION	PROJ. NO.	SHEET NO.	TOTAL SHEETS
VIII	COLO.	CC 12-0070-06	276	

CITY & COUNTY of DENVER

DENVER INTERNATIONAL AIRPORT

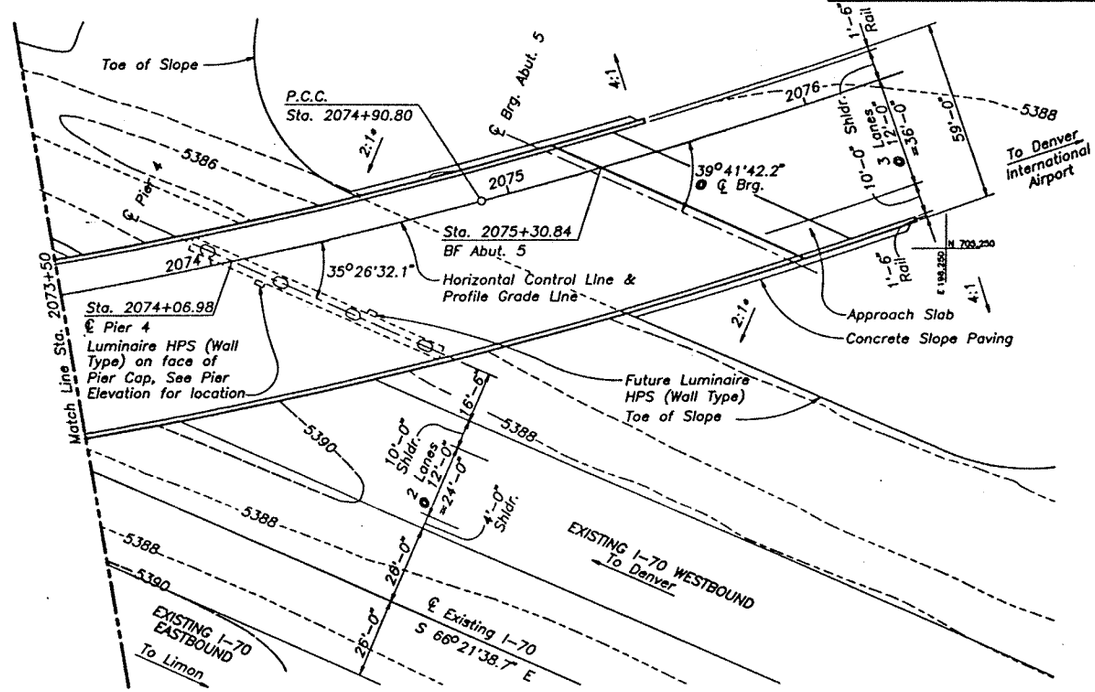

PLAN

Curve Data

Δc = 30°30'00.0"
D_c = 03°04'15.2"
T_c = 508.6674'
L_c = 993.1970'
R_c = 1865.7704
SSD = >850'
MDS = >60 mph
e = 0.075'/ft.

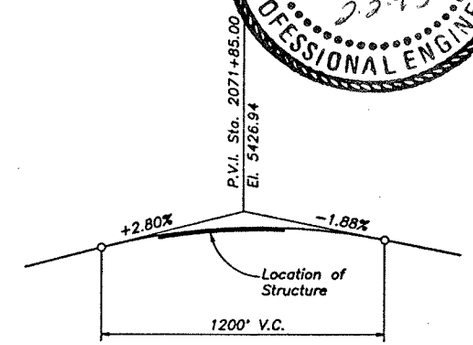

PROFILE GRADE DIAGRAM

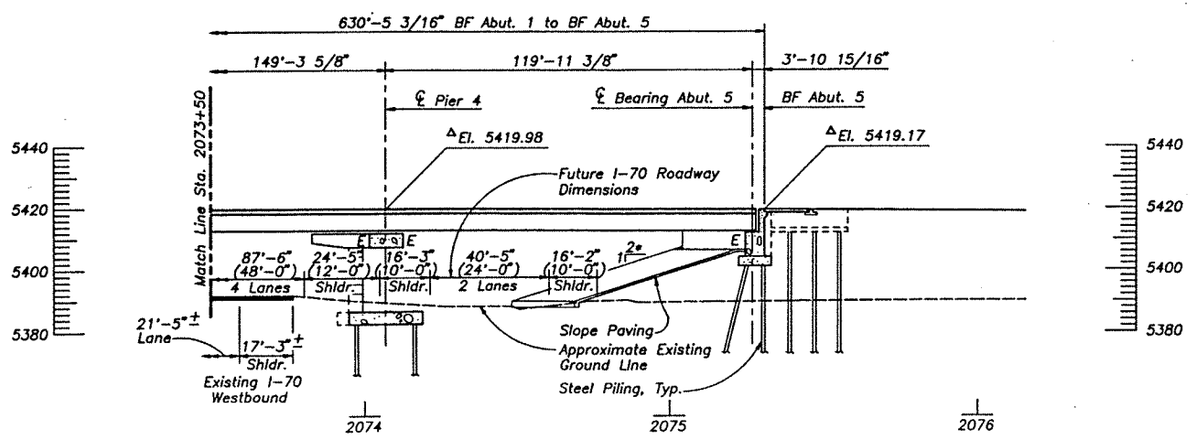

LONGITUDINAL SECTION
(Taken along Horizontal Control Line)

Notes:

1. Horizontal Control Line is the Horizontal Control Line for Inbound Airport Boulevard.
2. Δ Finished Roadway Elevation at Horizontal Control Line and Profile Grade Line
3. All dimensions on Longitudinal Section are measured along Horizontal Control Line
4. * 2:1 Slope is Perpendicular to the Front Face of Abutment.
5. Dimensions shown in ( ) are perpendicular to Centerline I-70.

COLORADO REGISTERED PROFESSIONAL ENGINEER
LAWRENCE REX REASCH
26401
2-2-93

	INITIAL	DATE			
Designed By	LRR	8-91	Checked By	GWB	7-91
Checked By	GWB	7-91	Quantities By	LRR	7-91
Detailed By	RAD	8-91	Checked By	GJD	8-91
				RAD	8-91

CH2M HILL

ISSUE RECORD NO.	BY	PURPOSE	DATE	CKD

DATE DE91
DRAWN BY: R. Dillon
DESIGNED BY: L. Reasch
CHECKED BY: B. Beame

STRUCTURE NUMBERS	E-17-RT
DRAWING NUMBER	8-3 OF 46
FAA AIP NO:	
WORK BREAKDOWN NO. 13CCA	
DESIGN CONTRACT NO. E154A	
CONST. CONTRACT NO. F154A	
PROJECT NO.	
VOLUME NO. 1	

SHEET TITLE
GENERAL LAYOUT
2 OF 2

SHEET NO.
CO OF
CADD FILE NO.
X-13CCA-E154A-F154A-8-2-CO -#A

AS CONSTRUCTED					
NO REVISIONS	REVISED	VOID			

FED. ROAD REGION	DIVISION	PROJ. NO.	SHEET NO.	TOTAL SHEETS
VIII	COLO.	CC 12-0070-06	277	

CITY & COUNTY of DENVER

DENVER INTERNATIONAL AIRPORT

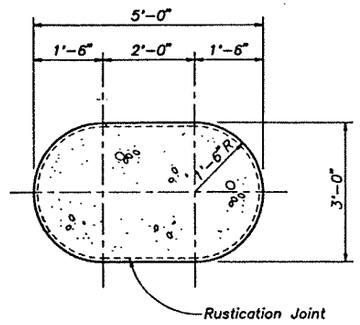

TYPICAL PIER COLUMN

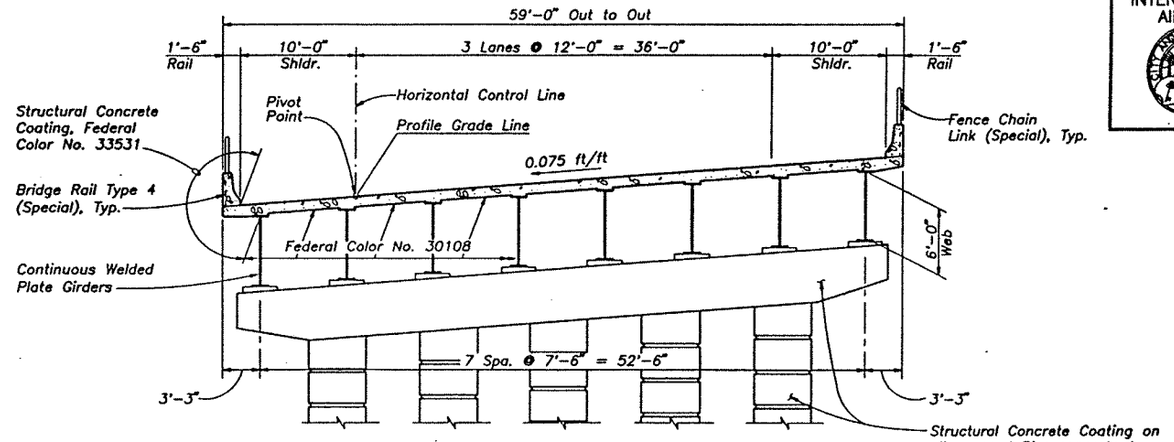

TYPICAL SECTION

(Perpendicular to Horizontal Control Line, looking Ahead Station)

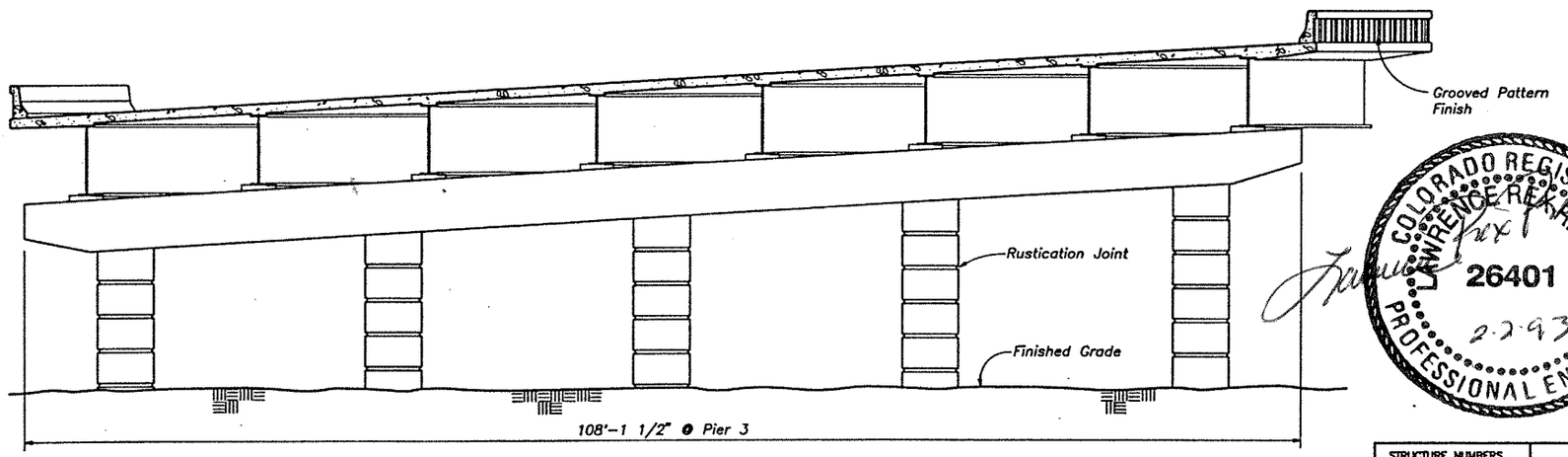

TYPICAL PIER ELEVATION

(Parallel to Pier 3 Cap, Pier 2 and Pier 4 Similar)

COLORADO REGISTERED PROFESSIONAL ENGINEER
LAWRENCE R. REASCH
26401
2-2-93

INITIAL	DATE			
Designed By	LRR	6-91	Checked By	GWB 7-91
Checked By	GWB	7-91	Quantities By	LRR 7-91
Detailed By	RAD	8-91	Checked By	GJD 8-91
				RAD 8-91

CH2M HILL

ISSUE RECORD NO.	BY	PURPOSE	DATE	CKD

DATE DE91
DRAWN BY: R. Dillon
DESIGNED BY: L. Reasch
CHECKED BY: B. Bearne

STRUCTURE NUMBERS	E-17-RT
DRAWING NUMBER	B-4 OF 46

FAA AIP NO:
WORK BREAKDOWN NO. 13CCA
DESIGN CONTRACT NO. E154A
CONST. CONTRACT NO. F154A
PROJECT NO.
VOLUME NO. 1

SHEET TITLE: TYPICAL SECTIONS

SHEET NO.
CO OF
CADD FILE NO. X-13CCA-E154A-F154A-B-2-CO -#A

FED. ROAD REGION	DIVISION	PROJ. NO.	SHEET NO.	TOTAL SHEETS
VIII	COLO.	CC 12-0070-06	304	

CITY & COUNTY of DENVER

DENVER INTERNATIONAL AIRPORT

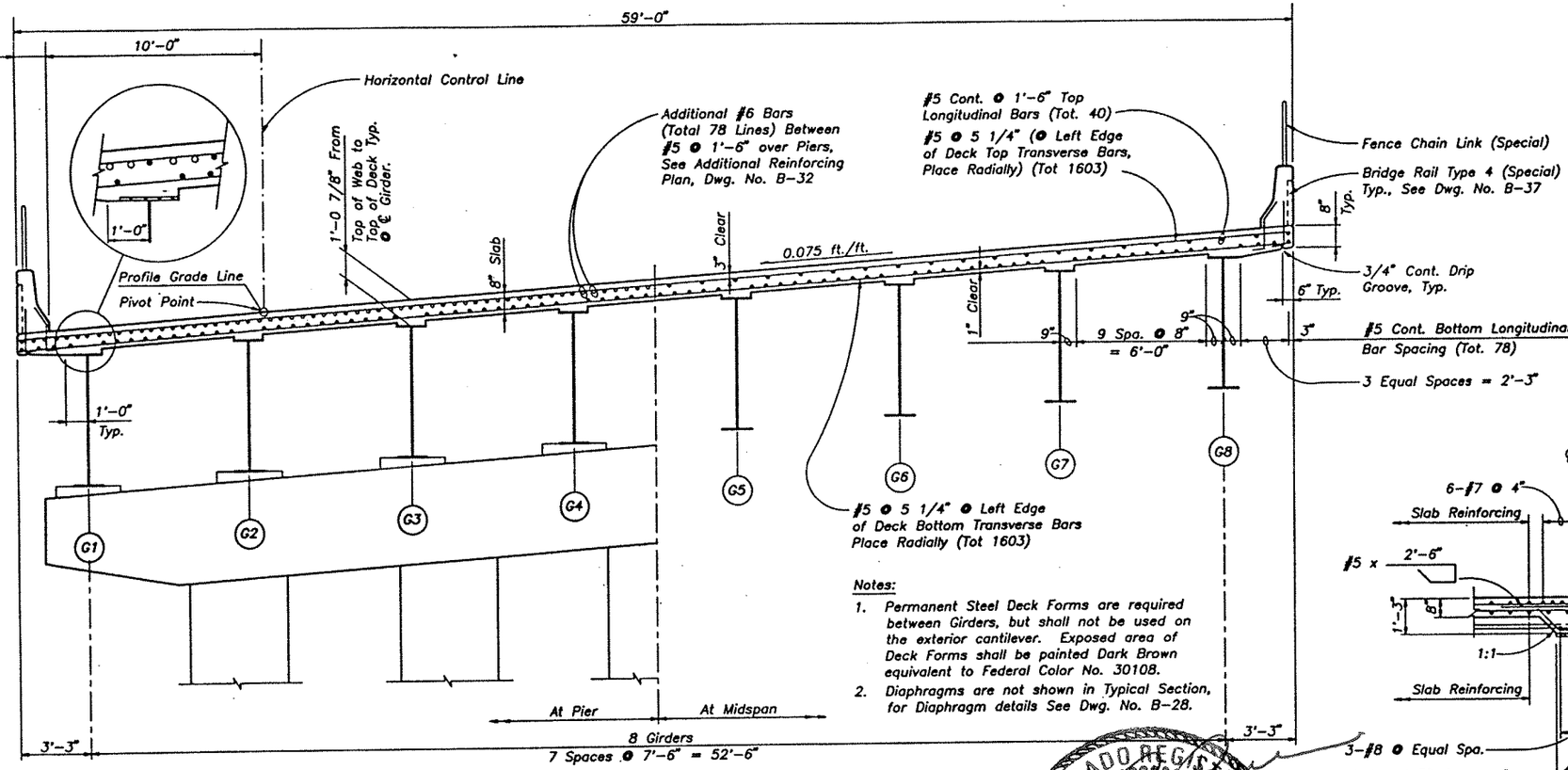

Notes:

1. Permanent Steel Deck Forms are required between Girders, but shall not be used on the exterior cantilever. Exposed area of Deck Forms shall be painted Dark Brown equivalent to Federal Color No. 30108.
2. Diaphragms are not shown in Typical Section, for Diaphragm details See Dwg. No. B-28.

TYPICAL SECTION

(Perpendicular to Horizontal Control Line, looking Ahead Station)

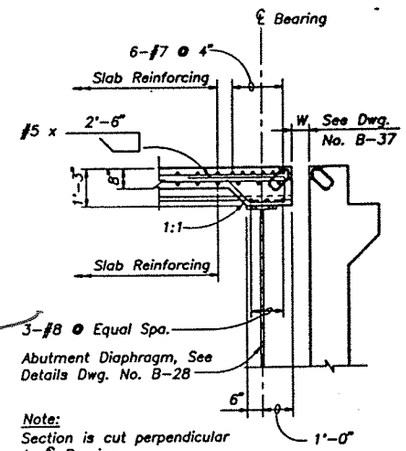

Note:
Section is cut perpendicular to ℄ Bearing

SECTION B-32 A

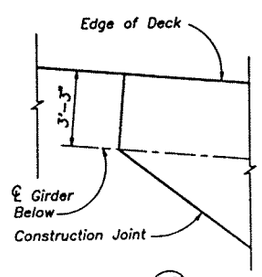

DETAIL B-32 1

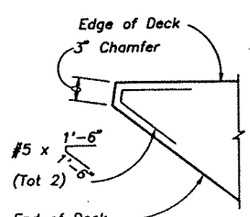

DETAIL B-32 2

Sandblast Prior to Placing Adjacent Concrete, Sandblasting Shall Not be Paid for Separately but Shall be Included in Item 601 Concrete Class D (Bridge), Care shall be taken not to damage Epoxy Coating on reinforcing, Repair any damage to Epoxy Coating prior to placing concrete

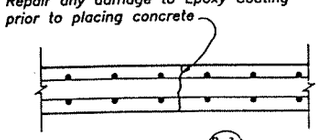

DETAIL B-32 3

COLORADO REGISTERED LAWRENCE REYNEAL REASCH 26401 PROFESSIONAL ENGINEER 2-2-93

STRUCTURE NUMBERS	E-17-RT
DRAWING NUMBER	B-31 OF 46

ISSUE RECORD
NO. BY PURPOSE DATE CKD

DATE DE91
DESIGNED BY: L. Reasch
DRAWN BY: C. Toggood
CHECKED BY: B. Beame

FAA AIP NO:
WORK BREAKDOWN NO. 13CCA
DESIGN CONTRACT NO. E154A
CONST. CONTRACT NO. F154A
PROJECT NO.
VOLUME NO. 1

SHEET TITLE
SUPERSTRUCTURE SECTION
SHEET NO.
CO OF
CADD FILE NO. X-13CCA-E154A-F154A-B-2-CO -#A

AS CONSTRUCTED					
NO REVISIONS	REVISED	VOID			

FED. ROAD REGION	DIVISION	PROJ. NO.	SHEET NO.	TOTAL SHEETS
VIII	COLO.	CC 12-0070-06	305	

CITY & COUNTY of DENVER

DENVER INTERNATIONAL AIRPORT

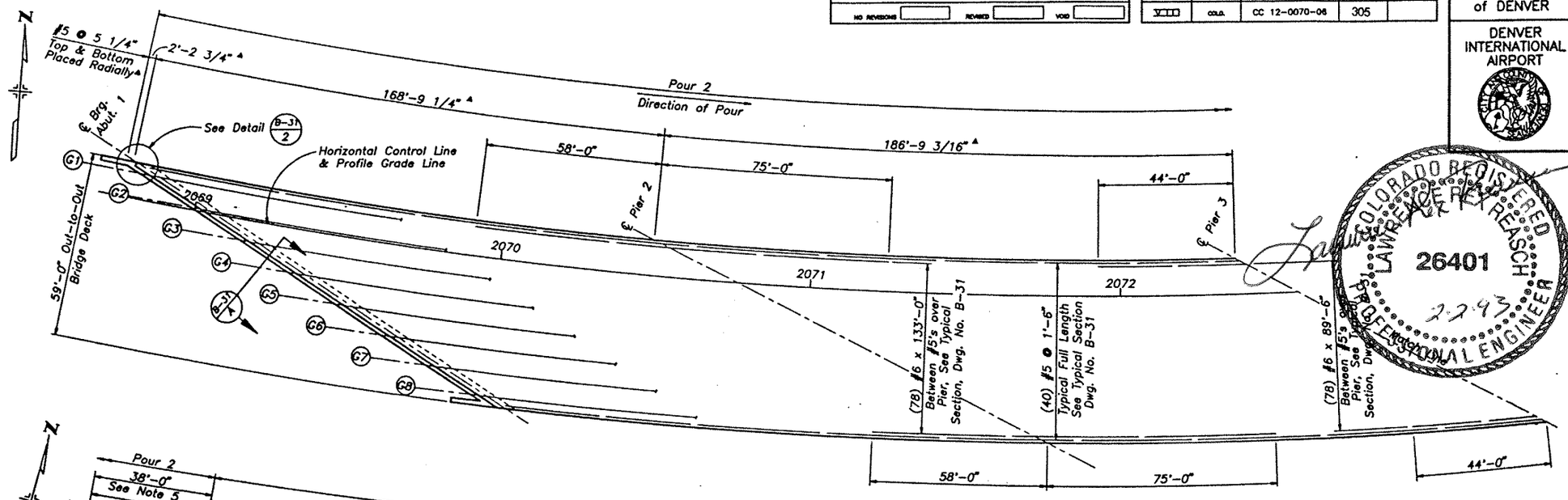

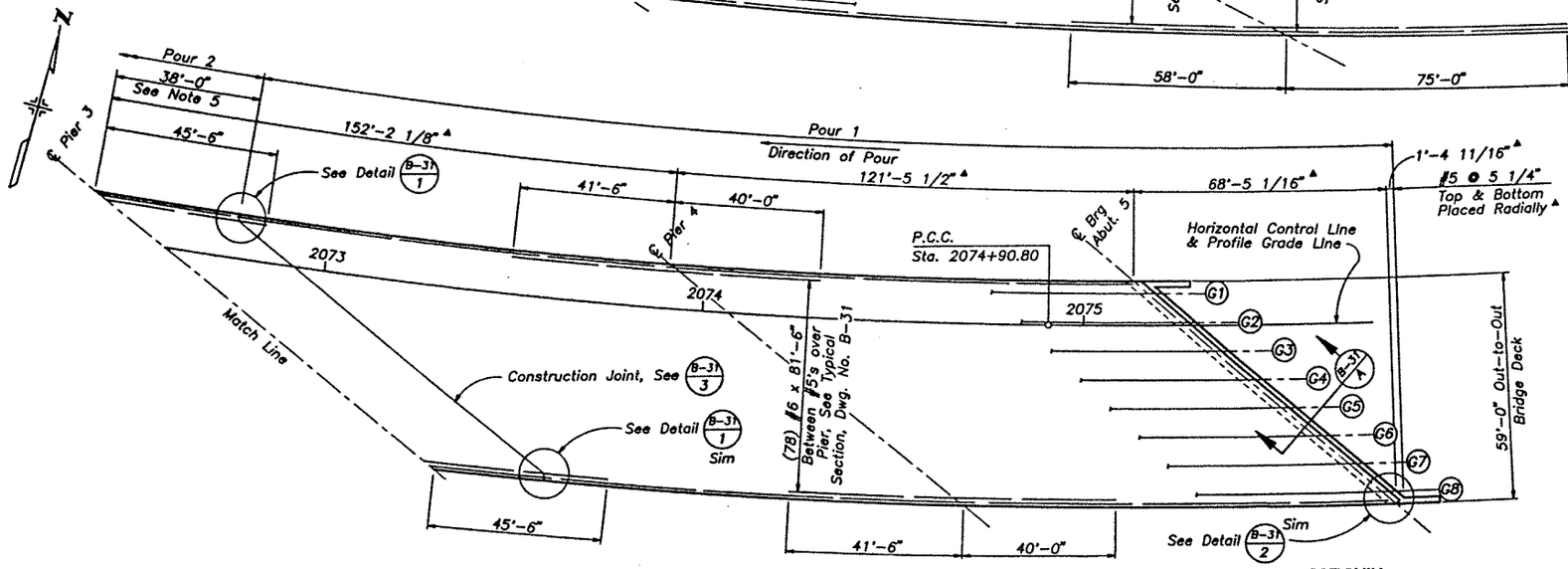

Notes:

1. Deck pour sequence and direction shown is required to minimize Girder stresses and uplift. Deviations shall not be permitted.
2. Additional #6 bar lengths shown on plan do not include splice lengths.
3. All splices shall be staggered.
4. ▲ = Measured at left edge of deck.
5. Construction Joint between Pour 1 and 2 shall be parallel to ℄ Pier 3.

	INITIAL	DATE			
Designed By	LWR	6-91	Checked By	GWB	7-91
Checked By	GWB	7-91	Quantities By	LWR	7-91
Detailed By	RAD	6-91	Checked By	GJG	6-91
				RAD	6-91

PLAN

ADDITIONAL DECK REINFORCING – POURING SEQUENCE

CH2M HILL

ISSUE RECORD NO. BY PURPOSE DATE CKD	DATE DE91	FAA AIP NO:	SHEET TITLE ADDITIONAL DECK REINFORCING & POURING SEQUENCE
	DESIGNED BY: L. Reasch	WORK BREAKDOWN NO. 13CCA	SHEET NO.
	DRAWN BY: R. Olson	DESIGN CONTRACT NO. E154A	CO OF
	CHECKED BY: B. Bearns	CONST. CONTRACT NO. F154A	CADD FILE NO. X-13CCA-E154A-F154A-B-2-CO -#A
		PROJECT NO.	
		VOLUME NO. 1	

STRUCTURE NUMBERS	E-17-RT
DRAWING NUMBER	B-32 OF 46

COLORADO REGISTERED LAWRENCE REX REASCH 26401 PROFESSIONAL ENGINEER 2-2-93

AS CONSTRUCTED			
NO REVISIONS	REVISED	VOID	

FED. ROAD REGION	DIVISION	PROJ. NO.	SHEET NO.	TOTAL SHEETS
VIII	COLO.	CC 12-0070-06	308	

CITY & COUNTY of DENVER

DENVER INTERNATIONAL AIRPORT

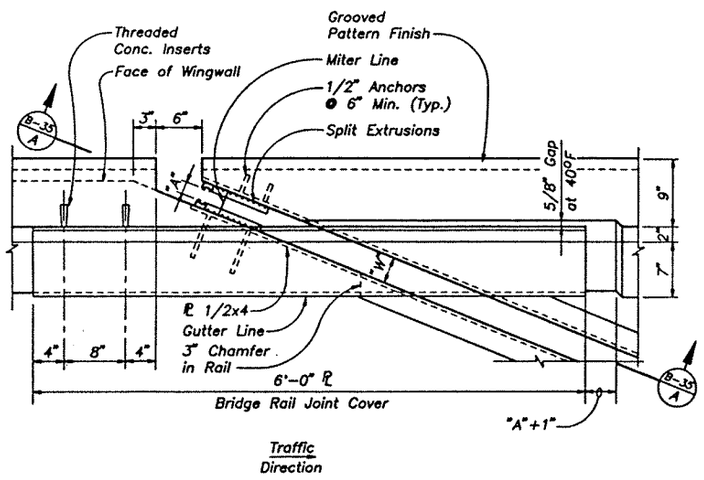

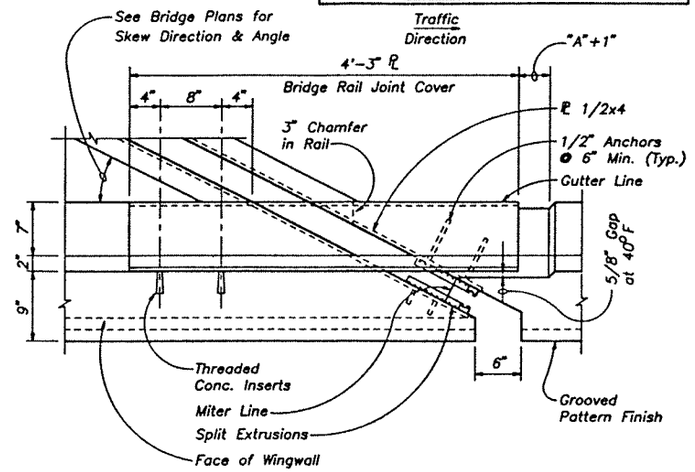

PLANS AT BRIDGE RAIL

(Abutment 1 Shown, Abutment 5 Similar)

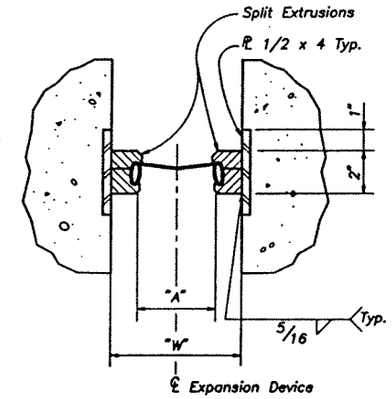

SECTION B-35/B

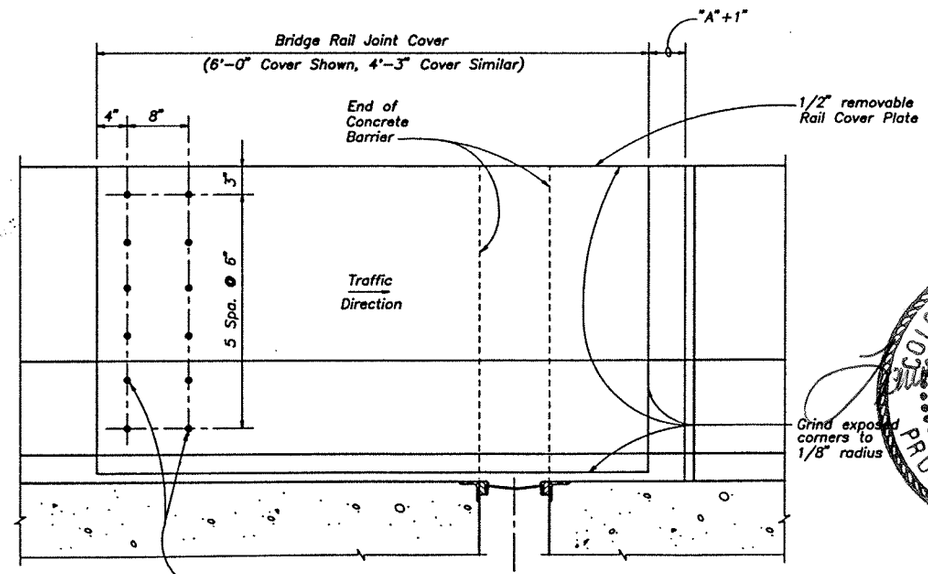

Note:
Bridge Rail Joint Covers are at Abutment 1 and Abutment 5 only. Joint Covers are not required at end of Approach Slabs.

TYPICAL BRIDGE RAIL JOINT COVER ELEVATION

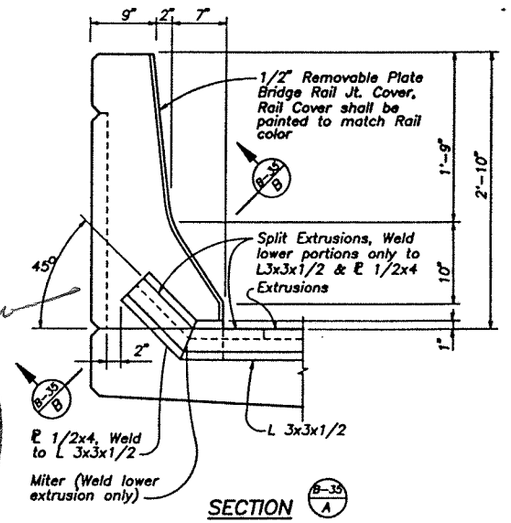

SECTION B-35/A

COLORADO REGISTERED PROFESSIONAL ENGINEER
LAWRENCE REASCH
26401
2-2-93

CH2MHILL

STRUCTURE NUMBERS	E-17-RT
DRAWING NUMBER	B-35 OF 48

ISSUE RECORD			
NO.	BY	PURPOSE	DATE

DATE: DE91
DESIGNED BY: L. Reasch
DRAWN BY: C. Toogood
CHECKED BY: B. Beome

FAA AIP NO.:
WORK BREAKDOWN NO.: 13CCA
DESIGN CONTRACT NO.: E154A
CONST. CONTRACT NO.: F154A
PROJECT NO.:
VOLUME NO.: 1

SHEET TITLE: BRIDGE EXPANSION DEVICE (0-4 INCH)
SHEET NO.
CO OF
CADD FILE NO.: X-13CCA-E154A-F154A-B-2-CO -9A

Designed By	BRW	DATE 6-91	Checked By	DWB	7-91
Checked By	DWB	7-91	Quantities By	LMR	7-91
Detailed By	CT	6-91	Checked By	C.R.	8-91
				RAD	8-91

12-03-91
0819-J,090
1=1.0

AS CONSTRUCTED					
NO REVISIONS	REVISED	VOID			

FED. ROAD REGION	DIVISION	PROJ. NO.	SHEET NO.	TOTAL SHEETS
VIII	COLO.	CC 12-0070-06	309	

CITY & COUNTY of DENVER

DENVER INTERNATIONAL AIRPORT

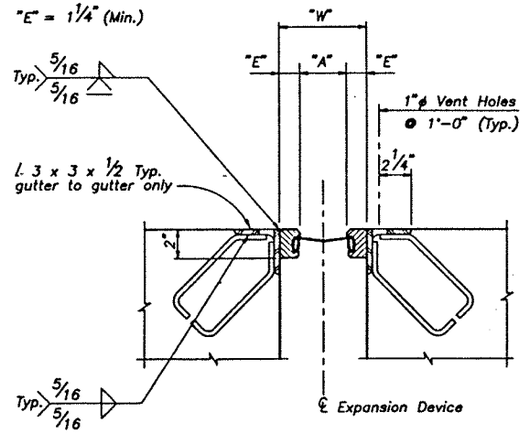

SECTION AT ABUTMENT OR PIER

Section taken perpendicular to ℄ Expansion Device

"A" DIMENSION*		
Structure Temperature	Abut. 1	Abut. 5
30	1 3/4"	2 1/4"
40	1 9/16"	2"
50	1 3/8"	1 3/4"
60	1 3/16"	1 1/2"
70	1"	1 1/4"
80	13/16"	1"
90	5/8"	3/4"
100	7/16"	1/2"

* "A" Dimension is measured perpendicular to ℄ Bearing Device

Movement	Abut. 1	Abut. 5
Perpendicular Range	2.541"	3.591"
Racking Range	5.148"	4.003"

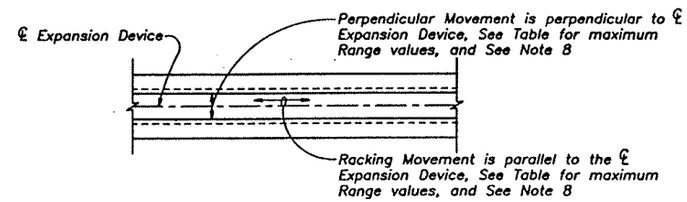

MOVEMENT DIRECTION

GENERAL NOTES:

1. The expansion device shall be installed on grade parallel to the slope and grade of the deck.
2. After the concrete has attained initial set, the attachments used to hold the angle assembly in its proper position shall be removed.
3. Do not paint steel surfaces in contact with either concrete or seal.
4. W and "E" dimensions are dependent upon the particular expansion device supplied, and shall be shown on the shop drawings.
5. The neoprene extrusion shall be in one piece.
6. Vent holes shall not be used for support bolts.
7. See Special Provisions for epoxy grouting of vent holes.
8. Values of movement given in the Table are maximum ranges for the Expansion Device, with a mid-range temperature of 40°F. The Expansion Device Supplier shall certify that the supplied Device will tolerate the maximum ranges of movements prior to approval by the Engineer.
9. The Neoprene extrusion shall be installed when the temperature is between 35°F and 45°F.

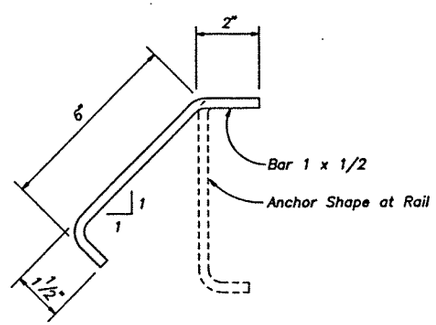

TYPICAL ANCHOR DETAIL

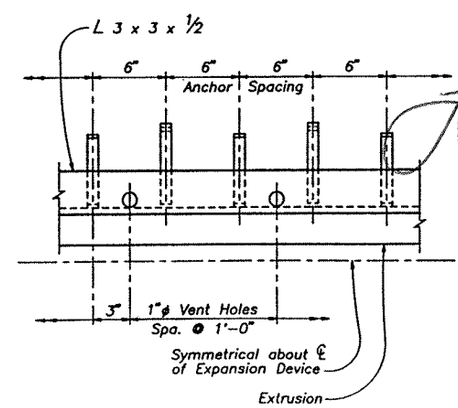

ANCHOR AND VENT HOLE SPACING

ACCEPTABLE ALTERNATES

WEBO-S-400
OFFLEX 40-SEQ
D.T.S. BROWN SS-400, SSA-400
EPOXY BRG. IND. BS-400-A
LENCO L400 TYPE W

COLORADO REGISTERED PROFESSIONAL ENGINEER
LAWRENCE REYNEASCH
26401
2-2-93

STRUCTURE NUMBER	E-17-RT
DRAWING NUMBER	B-36 OF 46

ISSUE RECORD NO. BY PURPOSE DATE CKD	DATE DE91	FAA AIP NO:	SHEET TITLE BRIDGE EXPANSION DEVICE (0-4 INCH)
	DESIGNED BY: L. Reasch	WORK BREAKDOWN NO. 13CCA	SHEET NO.
	DRAWN BY: R. Dillon	DESIGN CONTRACT NO. E154A	COO OF
	CHECKED BY: B. Beams	CONST. CONTRACT NO. E154A	CADD FILE NO. X-13CCA-E154A-F154A-B-2-CO -#A
		PROJECT NO.	
		VOLUME NO. 1	

AS CONSTRUCTED					
NO REVISIONS	REVISED	VOID	FED. ROAD REGION	DIVISION	PROJ. NO.	SHEET NO.	TOTAL SHEETS
			VIII	COLO.	CC 12-0070-06	313	

CITY & COUNTY of DENVER

DENVER INTERNATIONAL AIRPORT

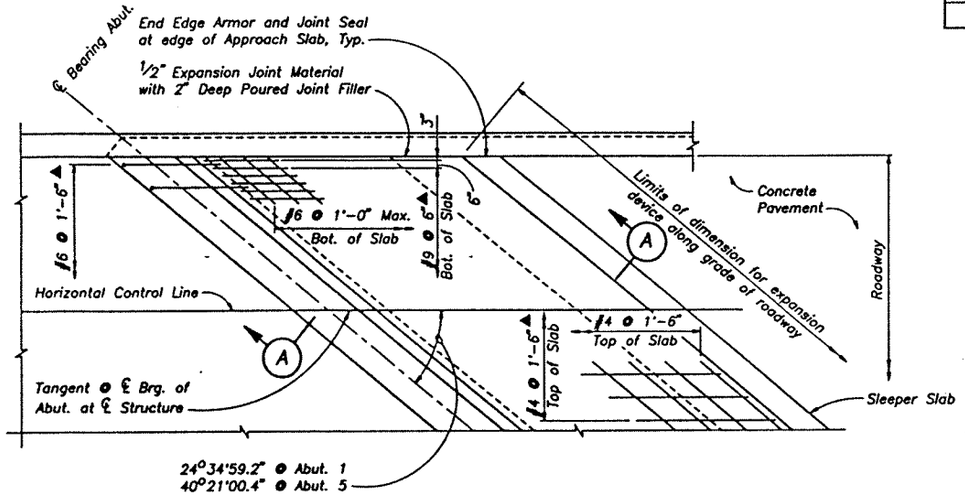

PLAN

▲ – Place Parallel to Tangent at ℄ of Structure

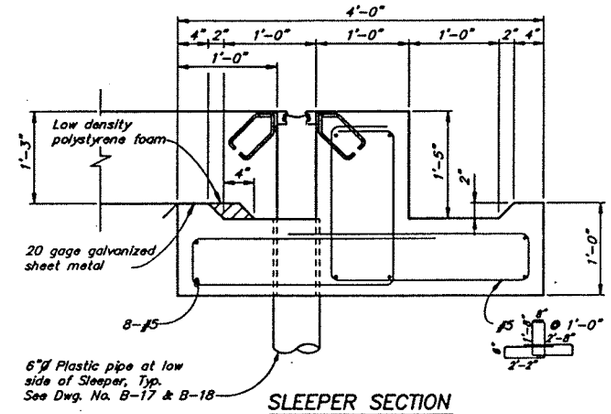

SLEEPER SECTION

Taken normal to expansion device
Sleeper may be precast.

GENERAL NOTES :

1. Concrete for approach slab shall be Class D.
2. 1/2" Expansion Joint Material shall meet AASHTO Spec. M213.

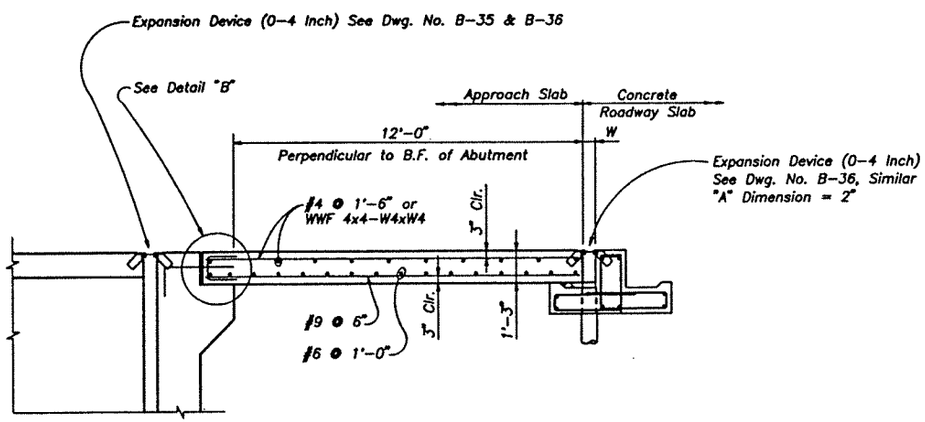

SECTION (A)

With Concrete Roadway Slab

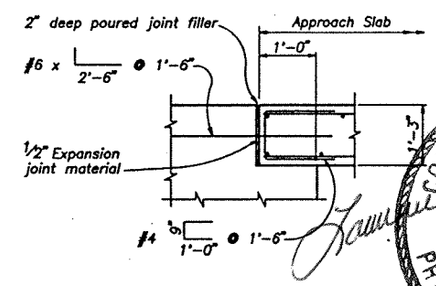

DETAIL "B"

COLORADO REGISTERED LAWRENCE REX REASCH 26401 2-2-93 PROFESSIONAL ENGINEER

CH2M HILL

ISSUE RECORD NO. BY PURPOSE DATE CKD	DATE DE91	FAA AIP NO:	SHEET TITLE
	DESIGNED BY: L. Reasch	WORK BREAKDOWN NO. 13CCA	APPROACH SLAB
	DRAWN BY: C. Toogood	DESIGN CONTRACT NO. E154A	SHEET NO.
	CHECKED BY: B. Beame	CONST. CONTRACT NO. F154A	CO OF
		PROJECT NO.	CADD FILE NO. X-13CCA-E154A-F154A-B-1-CO -#A
		VOLUME NO. 1	

STRUCTURE NUMBERS E-17-RT

DRAWING NUMBER B-40 OF 46