AS CONSTRUCTED		
NO REVISIONS	REVISED	VOID

FED. ROAD REGION	DIVISION	PROJ. NO.	SHEET NO.	TOTAL SHEETS
VIII	COLO.	CC 12-0070-06	320	

CITY & COUNTY of DENVER

DENVER INTERNATIONAL AIRPORT

GENERAL NOTES

Structure excavation and backfill shall be in accordance with Standards M-206-2 and these plans.

For Structure Number Installation, see Standard S-614-12.

Expansion joint material shall meet AASHTO Specifications M-213.

All structural steel for steel piling, angles, bars, and rails for Bridge Expansion Device shall be AASHTO M-183 (ASTM A36).

All exposed concrete surfaces, down to 1'-0" below finished grade, shall receive a color coating per Section 601 Structural Concrete Coating, and as shown on these plans.

All reinforcing steel shall be grade 60. Epoxy coating is required for all reinforcing bars except where shown otherwise.

The following table gives the minimum lap splice length for reinforcing steel bars, unless shown or noted otherwise:

BAR SIZE	#4	#5	#6	#7	#8	#9	#10	#11
Class D Concrete	1'-3"	1'-6"	1'-10"	2'-2"	2'-10"	3'-7"	4'-7"	5'-7"
Class A Concrete	1'-3"	1'-6"	2'-0"	2'-8"	3'-6"	4'-5"	5'-7"	6'-10"

The contractor shall be responsible for the stability of the structure during construction.

These Plans were prepared assuming that during construction all the spans are to be supported simultaneously on falsework.

The information shown on these plans concerning the type and location of underground utilities is not guaranteed to be accurate or all inclusive. The contractor is responsible for making his own determination as to the type and location of underground utilities as may be necessary to avoid damage to them.

ABBREVIATIONS

Abut.	Abutment	⊗	Non-epoxy coated reinforcing steel
@	Spaced at	No.	Number
℄	Centerline	#	Pound
CL	Clear	Proj.	Project
Cont.	Continuous	R	Radius
Dwg.	Drawing	Reinf.	Reinforcement
Elev.	Elevation	Spa.	Spaces
Ft.	Feet	Sta.	Station
Inv.	Invert	Std.	Standard
Max.	Maximum	Tot.	Total
Min.	Minimum	Typ.	Typical
N	North	W	West

Cross Reference Drawing Number

B

Section or Detail Identification

SUMMARY OF QUANTITIES

	ITEM NO.	DESCRIPTION	UNIT	SUPER-STRUCTURE	ABUT. 1	PIER 2	PIER 3	ABUT. 4	TOTAL
(1)	206	Structure Excavation	CY		449	134	138	38	759
	206	Structure Backfill (Class 1)	CY		407			543	950
	206	Structure Backfill (Class 2)	CY			115	119		234
	502	Steel Piling (HP12x74)	LF		704	535	541	777	2557
	507	Concrete Slope and Ditch Paving (Reinforced)	CY		30.4			37.6	68
	515	Concrete Sealer	SY	913					913
(2)	518	Bridge Expansion Device (0-4 Inch)	LF		48			53	101
	601	Concrete Class A (Bridge)	CY		51.8			56.2	108
(3)	601	Concrete Class S (Bridge)	CY	396.0	57.0	29.8	29.8	60.4	573
	601	Concrete Class SF (Silica Fume Modified Concrete)	CY	44					44
	601	Structural Concrete Coating	SY	1076	79	43	43	91	1332
	602	Reinforcing Steel	LB		54	3344	3344	54	6796
(4)	602	Reinforcing Steel (Epoxy Coated)	LB	109501	13360	9159	9159	14015	155194
	603	6 Inch Plastic Pipe	LF		50			50	100
	605	6 Inch Perforated Pipe Underdrain	LF		85			93	178
	606	Bridge Rail Type 10	LF	444					444
	613	1¼ Inch Electrical Conduit	LF			56	40		96
	613	2 Inch Electrical Conduit	LF	452					452
	618	Prestressing Steel Wire or Strand	MKFT	562					562

(1) Includes 68 CY Excavation for Concrete Slope Paving at Abutments
(2) Includes 101 LF Bridge Expansion Device (0-4 Inch) for Approach Slabs
(3) Includes 61 CY Concrete Class S (Bridge) for Approach Slabs
(4) Includes 7001 LB Reinforcing Steel (Epoxy Coated) for Approach Slabs

INDEX OF DRAWINGS

B1 GENERAL INFORMATION – SUMMARY OF QUANTITIES
B2 GENERAL LAYOUT
B3 ENGINEERING GEOLOGY
B4 CONSTRUCTION LAYOUT–FOOTING AND PILING LAYOUT
B5 ABUTMENT 1 DETAILS
B6 ABUTMENT 4 DETAILS
B7 WINGWALL DETAILS
B8 PIER 2 DETAILS
B9 PIER 3 DETAILS
B10 SUPERSTRUCTURE DETAILS
B11 BOX GIRDER DETAILS
B12 BOX GIRDER DETAILS
B13 BOX GIRDER DETAILS
B14 BRIDGE RAIL TYPE 10
B15 BRIDGE RAIL TYPE 10
B16 SLOPE PAVING DETAILS
B17 APPROACH SLAB DETAILS
B18 BRIDGE DECK ELEVATIONS
B19 BRIDGE DECK ELEVATIONS
B20 BRIDGE DECK ELEVATIONS
B21 BRIDGE DECK ELEVATIONS
B22 ROADWAY APPROACHES
B23 BENCH MARK

DESIGN DATA

DESIGN:	1989 and Interim AASHTO Standard Specifications for Highway Bridges.
DESIGN METHOD:	Working stress
DEAD LOADS:	Concrete – 150 PCF Future wearing surface – 24 PSF Silica Fume Concrete Overlay – 25 PSF Allowance for stay-in-place forms – 12 PSF
LIVE LOADS:	AASHTO HS20-44 and Interstate Alternate, and Colorado Permit Vehicle.
CONCRETE:	Class A f'_c = 3000 PSI f_c = 1200 PSI Class S f'_c = 4500 PSI f_c = 1800 PSI
REINFORCING STEEL:	All reinforcing steel shall be ASTM A-615 Grade 60. f_y = 60,000 PSI f_s = 24,000 PSI
PRESTRESSING STEEL:	f'_s = 270,000 PSI, low relaxation
STRUCTURAL STEEL:	ASTM A36 (AASHTO M-183) F_y = 36,000 PSI

BRIDGE DESCRIPTION

3 Span (43'-10", 80'-6", 51'-8"). Continuous cast-in-place post-tensioned concrete box girder bridge.

Inbound Airport Boulevard over Southbound Buckley Road. 40'-0" roadway curb to curb, 38° skew, Bridge Rail Type 10.

COLORADO REGISTERED PROFESSIONAL ENGINEER DANA G. HORNER 11611 Horner

Plains Engineering, Inc.

Station 2087+30.21 to Station 2089+43.78		STRUCTURE NUMBER	E-17-RV
Near Denver Sec.29 T3S R66W		DRAWING NUMBER B1 OF 23	
ISSUE RECORD NO. BY PURPOSE DATE CKD	DATE DE91 DESIGNED BY D. HORNER DRAWN BY: S. WESTERDALE CHECKED BY: D. HORNER	FAA AIP NO: WORK BREAKDOWN NO. 13CCA DESIGN CONTRACT NO. E154A CONST. CONTRACT NO. F154A PROJECT NO. VOLUME NO. 1	SHEET TITLE GENERAL INFORMATION – SUMMARY OF QUANTITIES SHEET NO. CO OF CADD FILE NO. X-13CCA-E154A-F154A-B-2-CO -FA

INITIAL	DATE		
Designed By DGH	6-91	Checked By DGH	7-91
Checked By TEX	9-91	Quantities By DGH	7-91
Detailed By SJW	7-91	Checked By JMW	7-91

11-25-91
DABUC13.DWG
PLOT 1=1

FED. ROAD REGION	DIVISION	PROJ. NO.	SHEET NO.	TOTAL SHEETS
VIII	COLO.	CC 12-0070-06	321	.

AS CONSTRUCTED
NO REVISIONS | REVISED | VOID

CITY & COUNTY of DENVER

DENVER INTERNATIONAL AIRPORT

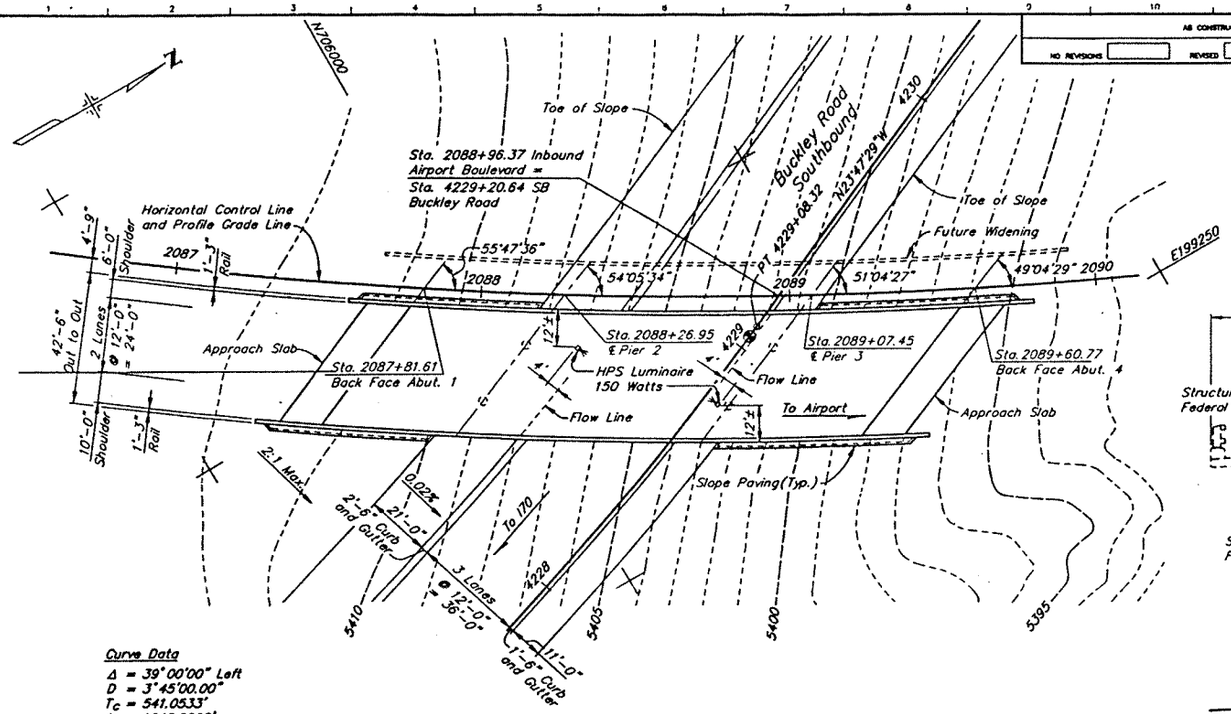

Curve Data
Δ = 39°00'00" Left
D = 3°45'00.00"
T_c = 541.0533'
L_c = 1040.0000'
R_c = 1527.8875'
e_c = 0.075 Ft/Ft.

PLAN

⊗ Location of Minimum Vertical Clearance

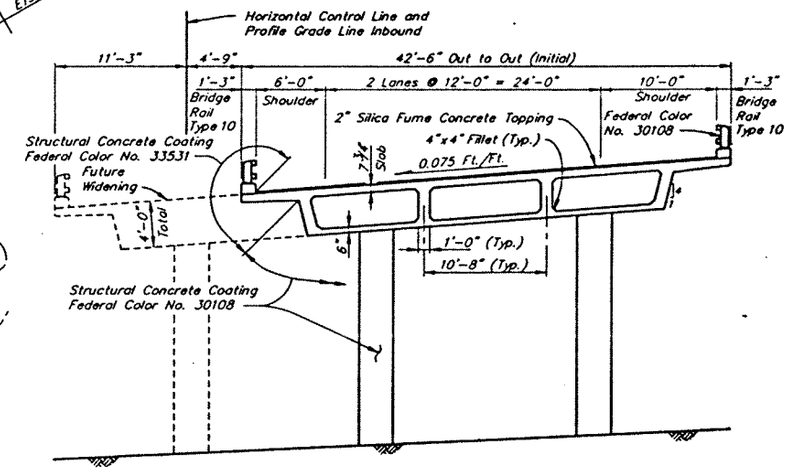

TYPICAL SECTION

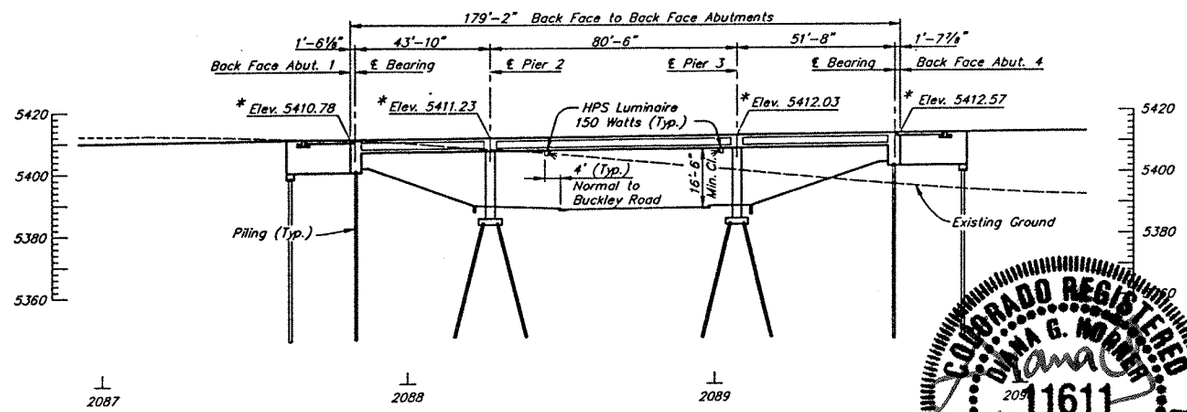

SECTION

(Projected to Profile Grade Line)
* Finished Roadway Elevation

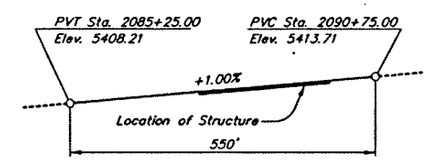

PROFILE GRADE

Live Loading: HS20-44 and Interstate Alternate

STRUCTURE NUMBER	E-17-RV
DRAWING NUMBER B2 OF 23	

Plains Engineering, Inc.

ISSUE RECORD NO. BY PURPOSE DATE CKD	DATE DE91	FAA AIP NO:	SHEET TITLE
	DESIGNED BY D. HORNER	WORK BREAKDOWN NO. 13CCA	GENERAL LAYOUT
	DRAWN BY: S. WESTERDALE	DESIGN CONTRACT NO. E154A	SHEET NO.
	CHECKED BY: D. HORNER	CONST. CONTRACT NO. F154A	CO OF
		PROJECT NO. #####	CADD FILE NO. X-13CCA-E154A-F154A-B-2-CO -#A
		VOLUME NO. 1	

COLORADO REGISTERED PROFESSIONAL ENGINEER
DIANA G. HORNER
11611

	INITIAL	DATE			
Designed By	DGH	6-91	Checked By	DGH	7-91
Checked By	FEA	9-91	Quantities By	DGH	7-91
Detailed By	SJW	7-91	Checked By	HWG	7-91

10-11-91
DABUC1.DWG
1-20

AS CONSTRUCTED			
NO REVISIONS	REVISED	VOID	

FED. ROAD REDISCN	DIVISION	PROJ. NO.	SHEET NO.	TOTAL SHEETS
VIII	COLO.	CC 12-0070-06	329	

CITY & COUNTY of DENVER

DENVER INTERNATIONAL AIRPORT

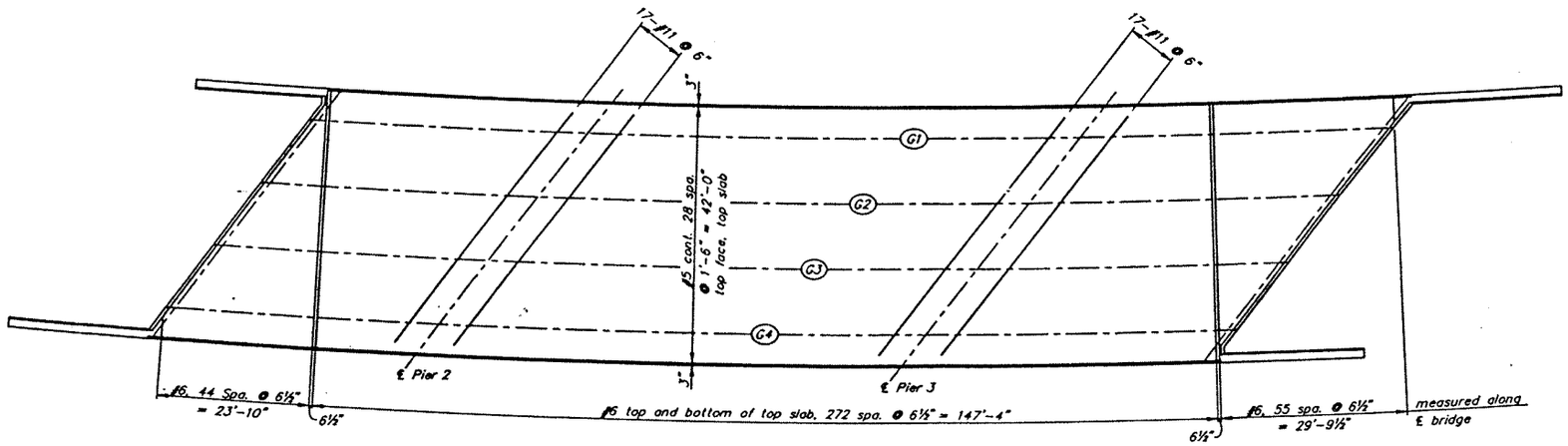

SUPERSTRUCTURE PLAN

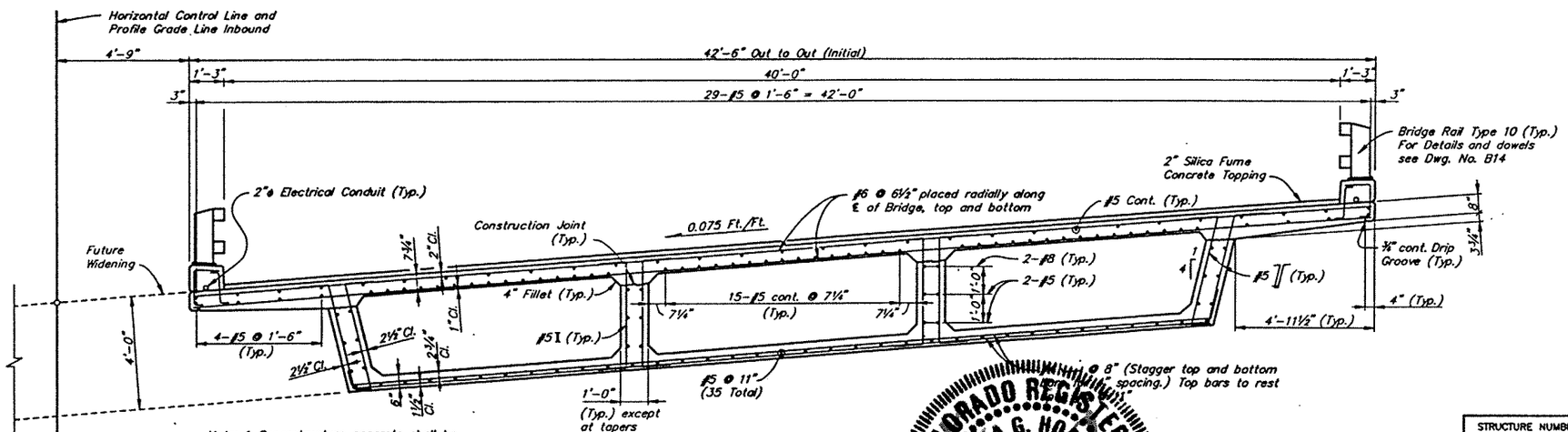

Note: 1. Superstructure concrete shall be Concrete Class S (Bridge).

2. Interior Webs are Vertical. See Box Girder Details for stirrup spacing.

3. See Construction Layout for web taper dimensions.

TYPICAL SECTION

COLORADO REGISTERED DIANA G. HORNER 11611 PROFESSIONAL ENGINEER

Plains Engineering, Inc.

ISSUE RECORD NO.	BY	PURPOSE	DATE	CKD

DATE DE 91
DESIGNED BY D. HORNER
DRAWN BY: S. WESTERDALE
CHECKED BY: D. HORNER

STRUCTURE NUMBER	E-17-RV
DRAWING NUMBER B10 OF 23	
FAA AIP NO.	SHEET TITLE SUPERSTRUCTURE DETAILS
WORK BREAKDOWN NO. 13CCA	
DESIGN CONTRACT NO. E154A	SHEET NO.
CONST. CONTRACT NO. F154A	CO OF
PROJECT NO. #####	CADD FILE NO. X-13CCA-E154A-F154A-B-2-CO -#A
VOLUME NO.	

	INITIAL	DATE		
Designed By	DGH	7-91	Checked By	DGH 7-91
Checked By	TSA	8-91	Quantities By	DGH 7-91
Detailed By	S.W.	7-91	Checked By	HMC 7-91

10-11-91
DAUBUC3.DWG
1=10

AS CONSTRUCTED			FED. ROAD REGION	DIVISION	PROJ. NO.	SHEET NO.	TOTAL SHEETS
NO REVISIONS	REVISED	VOID	VIII	COLO.	CC 12-0070-06	336	

CITY & COUNTY of DENVER

DENVER INTERNATIONAL AIRPORT

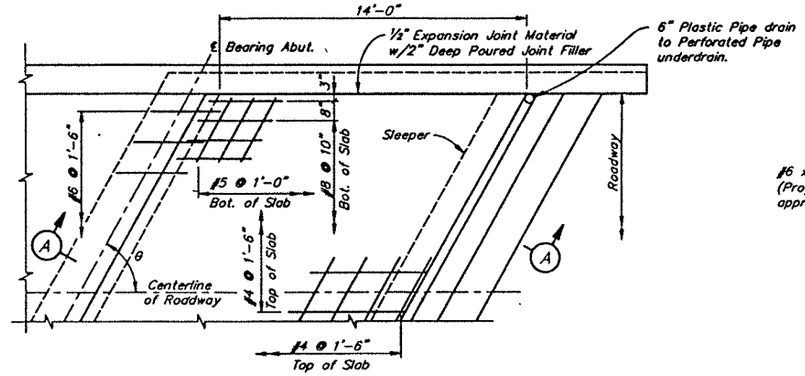

PLAN

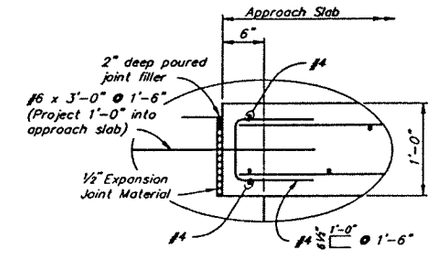

DETAIL B

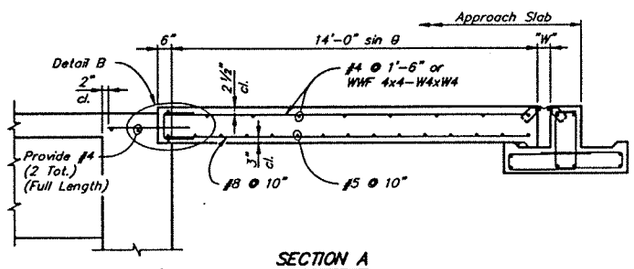

SECTION A

With Concrete Pavement Roadway

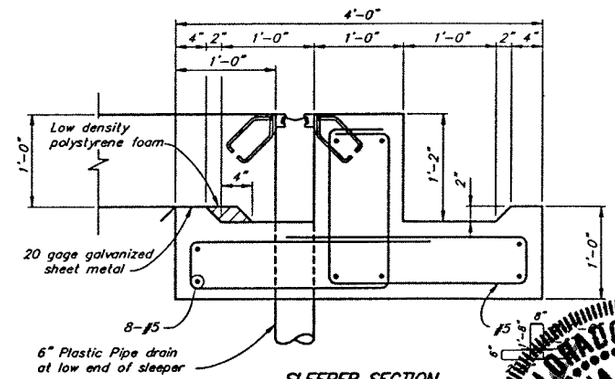

SLEEPER SECTION

Taken normal to expansion device
Sleeper may be precast.

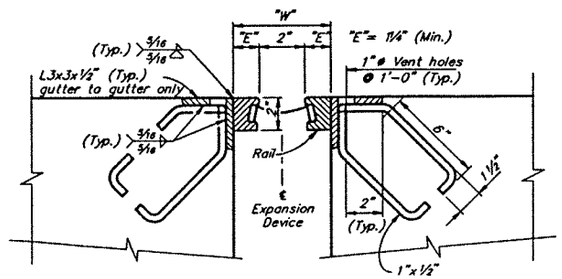

SECTION THRU BRIDGE EXPANSION DEVICE

Section taken perpendicular to ℄ expansion device.

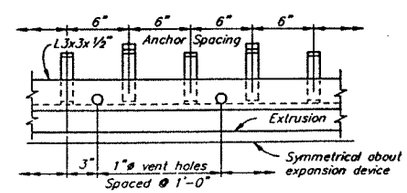

ANCHOR AND VENT HOLE SPACING

GENERAL NOTES :

Concrete for approach slab shall be Class D.

½" Expansion Joint Material shall meet AASHTO Specification M213.

The expansion device shall be installed on grade, parallel to the slope and grade of the approach slab.

After the concrete has attained initial set, the attachments used to hold the angle assembly in its proper position shall be removed.

Do not paint steel surfaces in contact with concrete and expansion device.

"W" and "E" dimensions are dependent upon the particular expansion device supplied, and shall be shown on the shop drawings.

The neoprene extrusion shall be one piece.

Vent holes shall not be used for support bolts.

See Special Provisions for epoxy grouting of vent holes.

ACCEPTABLE ALTERNATES

WABO-S-400
ONFLEX 40-SEQ
D.S. BROWN SS-400, SSA-400
EPOXY BRG. IND. BS-400-A
LENCO L400 TYPE W

COLORADO REGISTERED DIANA G. HORNER 11611 PROFESSIONAL ENGINEER

Plains Engineering, Inc.

INITIAL	DATE	Checked By	DCH 7-91
DCH	6-91	Quantities By	DCH 7-91
TEX	6-91	Checked By	JWC 7-91
SJW	7-91		
Designed By	Checked By	Detailed By	

10-12-91
DA8UCC10.DWG
PLOT 1=1

ISSUE RECORD NO. BY PURPOSE DATE CKD	DATE DEC 91	STRUCTURE NUMBER E-17-RV
	DESIGNED BY D. HORNER	DRAWING NUMBER B17 OF 23
	DRAWN BY: S. WESTERDALE	FAA AIP NO:
	CHECKED BY: D. HORNER	WORK BREAKDOWN NO. 13CCA
		DESIGN CONTRACT NO. E154A
		CONST. CONTRACT NO. F154A
		PROJECT NO. ####
		VOLUME NO.

SHEET TITLE: APPROACH SLAB DETAILS

SHEET NO. CO OF

CADD FILE NO. X-13CCA-E154A-F154A-B-2-CO -#A