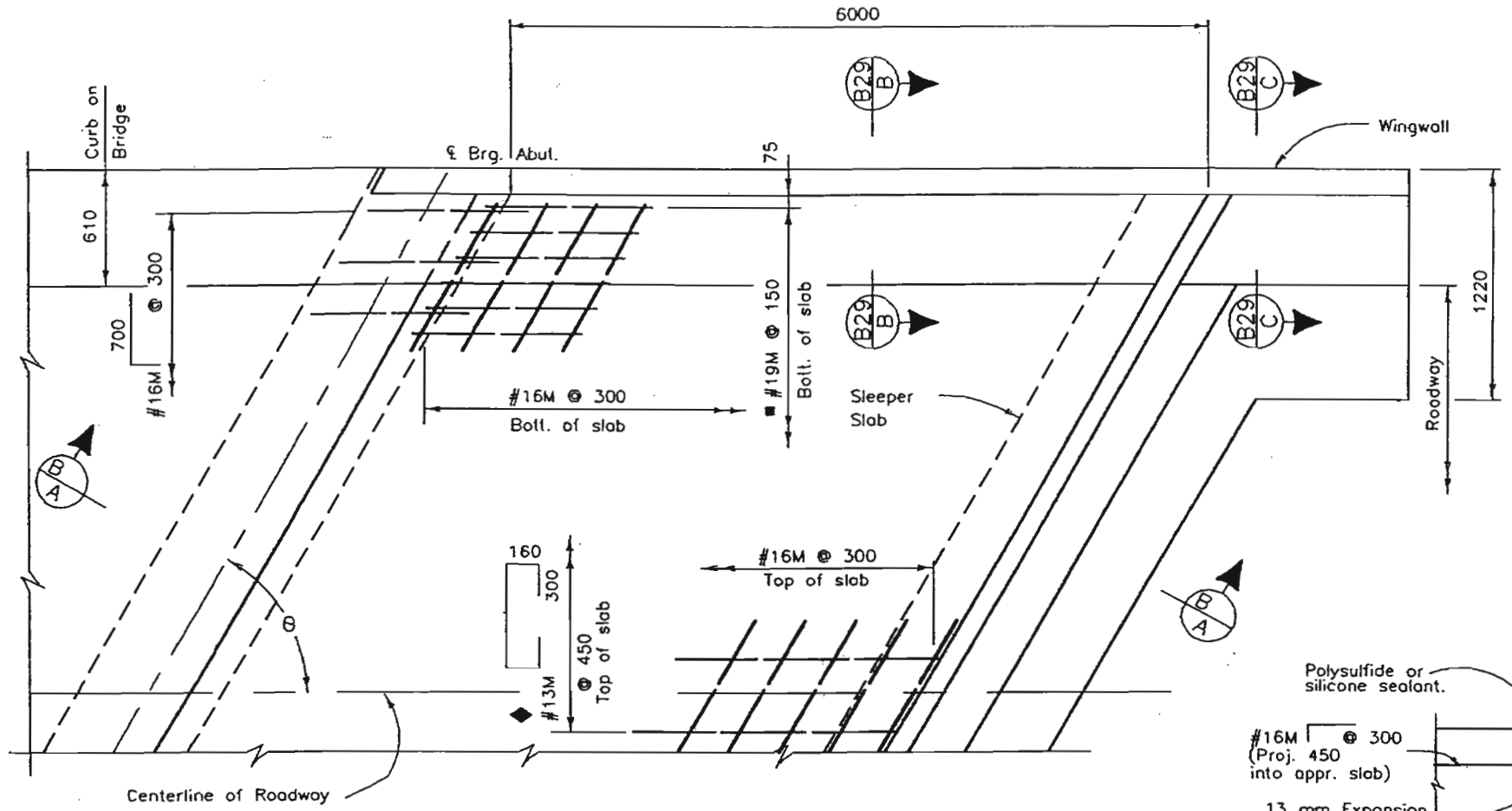

PLAN

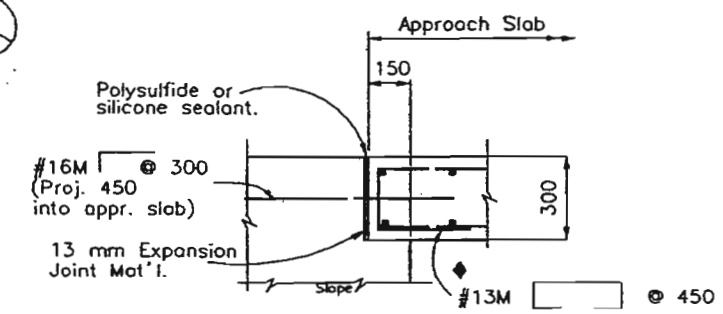

DETAIL "B"

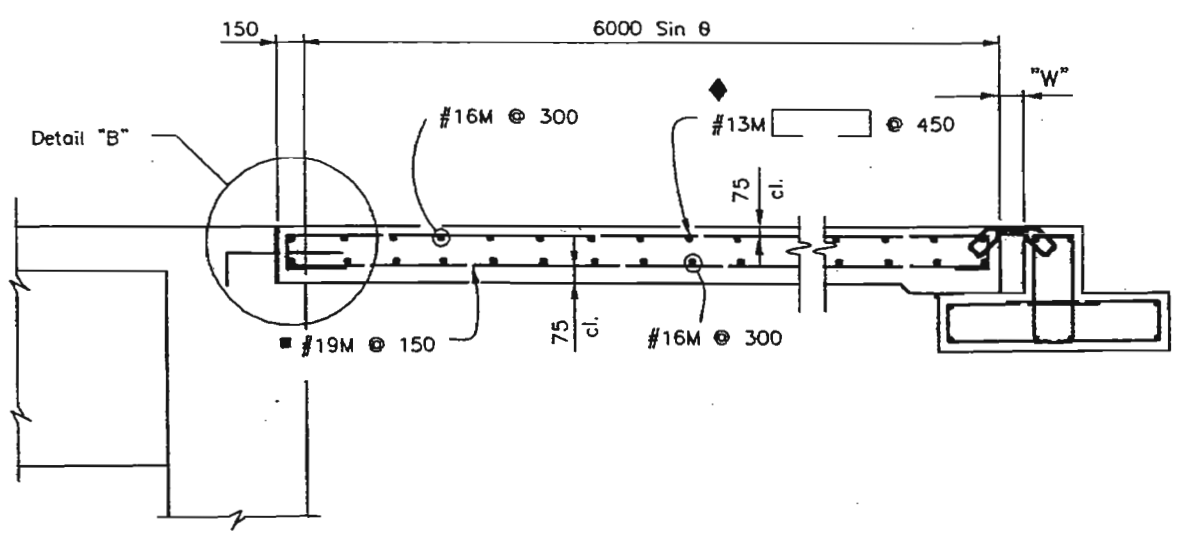

SECTION B/A

Contractor may use 300 160.

NOTES:

Concrete Class D (Bridge) shall be used for approach slabs.

13 mm expansion joint material shall meet A.A.S.H.T.O. Spec. M213.

For expansion device details see Dwg. No. B26.

For curb and rail details see Dwg. No. B32.

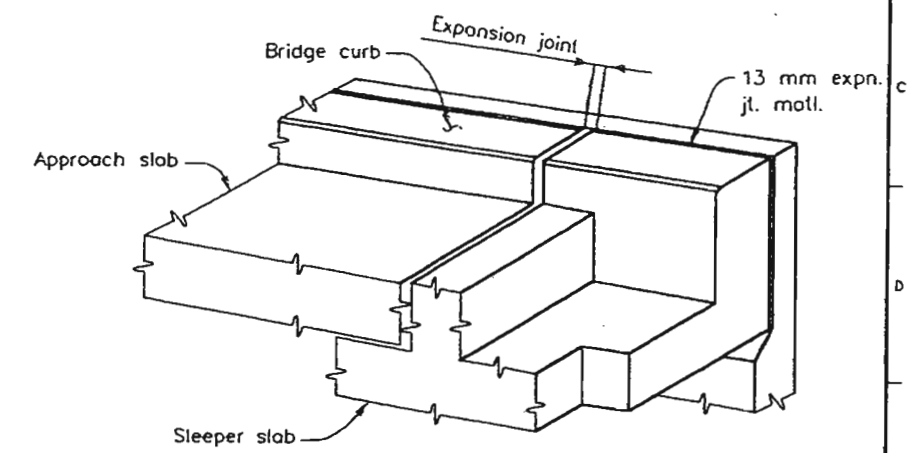

VIEW TYPE 10M RAIL

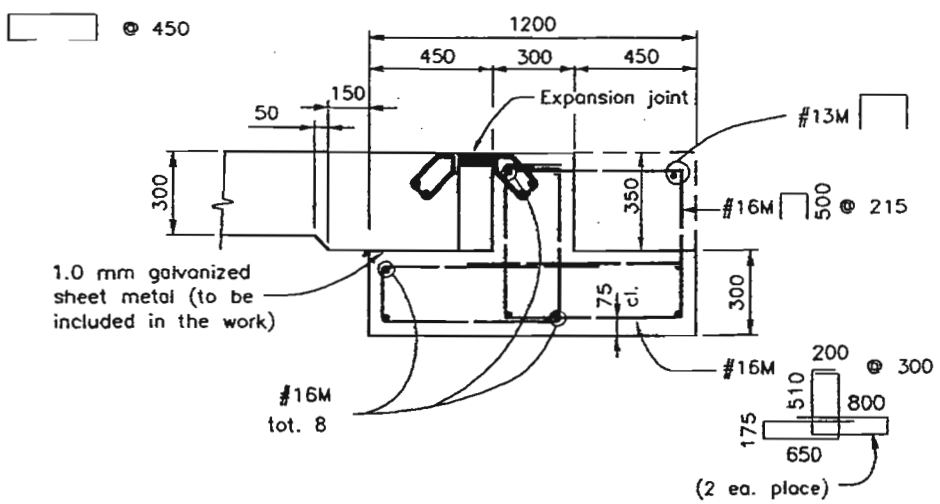

SLEEPER SECTION

Taken normal to expansion device

Carter=Burgess *Plains Engineering, Inc.*

Computer File Information			
Creation Date:	4-19-00	Initials:	SLG
Last Modification Date:	7-13-00	Initials:	SLG
Full Path:			C:\CBCC
Drawing File Name:			CBCCASD.DWG
Acad Ver. R14	Scale: 1 = 1	Units:	METRIC

Sheet Revisions

Colorado Department of Transportation
4201 East Arkansas Avenue, Room 330
Denver, Colorado 80222-3400
Phone: 303-757-9352 FAX: 303-757-9197
Staff Bridge Branch

As Constructed
No Revisions:
Revised:
Void:

I-25 OVER COTTONWOOD CREEK
APPROACH SLAB DETAILS - SHEET 1

Designer: L. Felzien
Detailer: S. Greenwald
Structure Numbers: I-17-GY, I-17-HF
Sheet Subset: Bridge
Subset Sheets: B28 of 41

Project No./Code
IM 0252-310
11964
Sheet Number 164

DESIGN	Initial	Date
Designed by	LLF	4-00
Checked by	LT	6-00

DETAIL	Initial	Date
Detailed by	SLG	4-00
Checked by	LLF	4-00

QUANTITIES	Initial
Quantities by	LLF
Checked by	TCH

Revision Dates (Preliminary Stage Only)