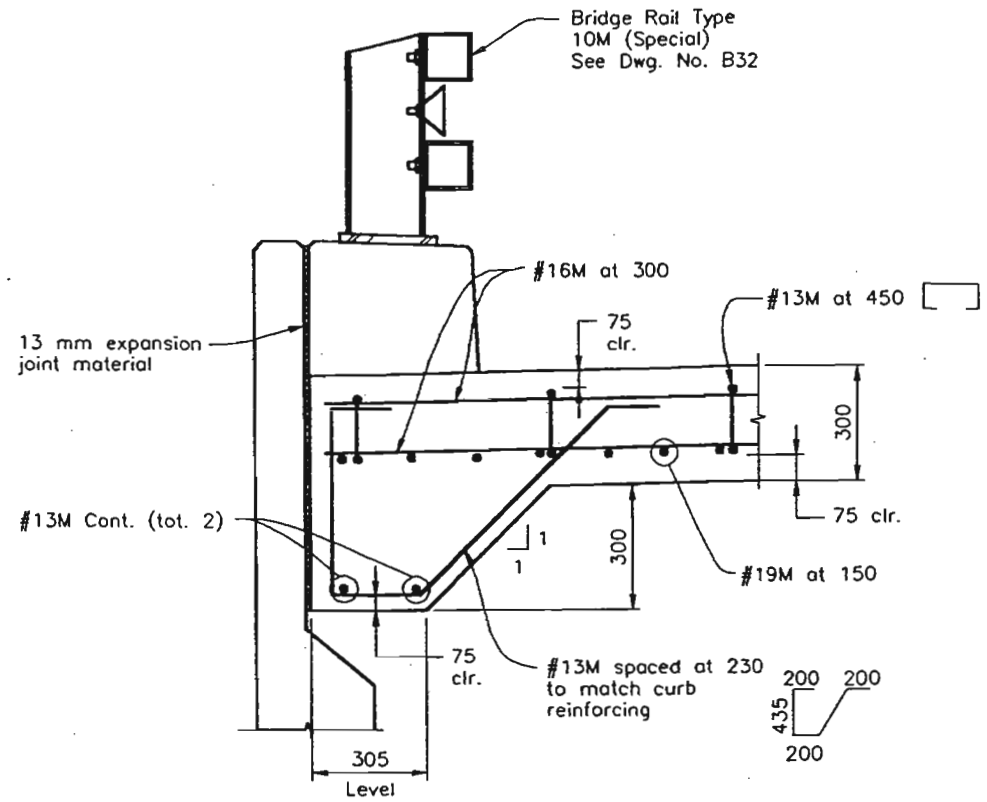

SECTION B28 / B

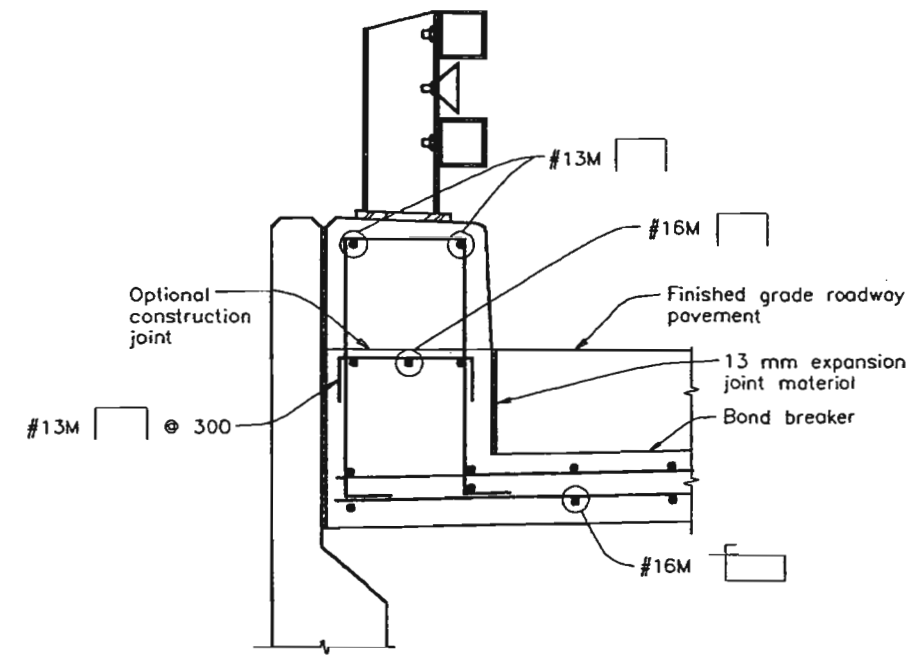

SECTION B28 / C

Carter:Burgess Plains Engineering, Inc.

Computer File Information			
Creation Date:	4-24-00	Initials:	SLG
Last Modification Date:	8-11-00	Initials:	SLG
Full Path:			C:\CBCC
Drawing File Name:			CBCCASD2.DWG
Acad Ver. R14	Scale: 1 = 100	Units:	METRIC

Sheet Revisions

Colorado Department of Transportation
4201 East Arkansas Avenue, Room 330
Denver, Colorado 80222-3400
Phone: 303-757-9352 FAX: 303-757-9197
Staff Bridge Branch

As Constructed
No Revisions:
Revised:
Void:

I-25 OVER COTTONWOOD CREEK
APPROACH SLAB DETAILS - SHEET 2

Designer: L. Felzien
Detailer: S. Greenwald
Structure Numbers: I-17-GY, I-17-HF
Sheet Subset: Bridge
Subset Sheets: B29 of 41

Project No./Code
IM 0252-310
11964
Sheet Number 165

DESIGN			DETAIL			QUANTITIES		
	Initial	Date		Initial	Date		Initial	Date
Designed by	LLF	4-00	Detailed by	SLG	4-00	Quantities by	LLF	6-00
Checked by	LT	6-00	Checked by	LLF	4-00	Checked by	TCH	6-00

Revision Dates (Preliminary Stage Only)