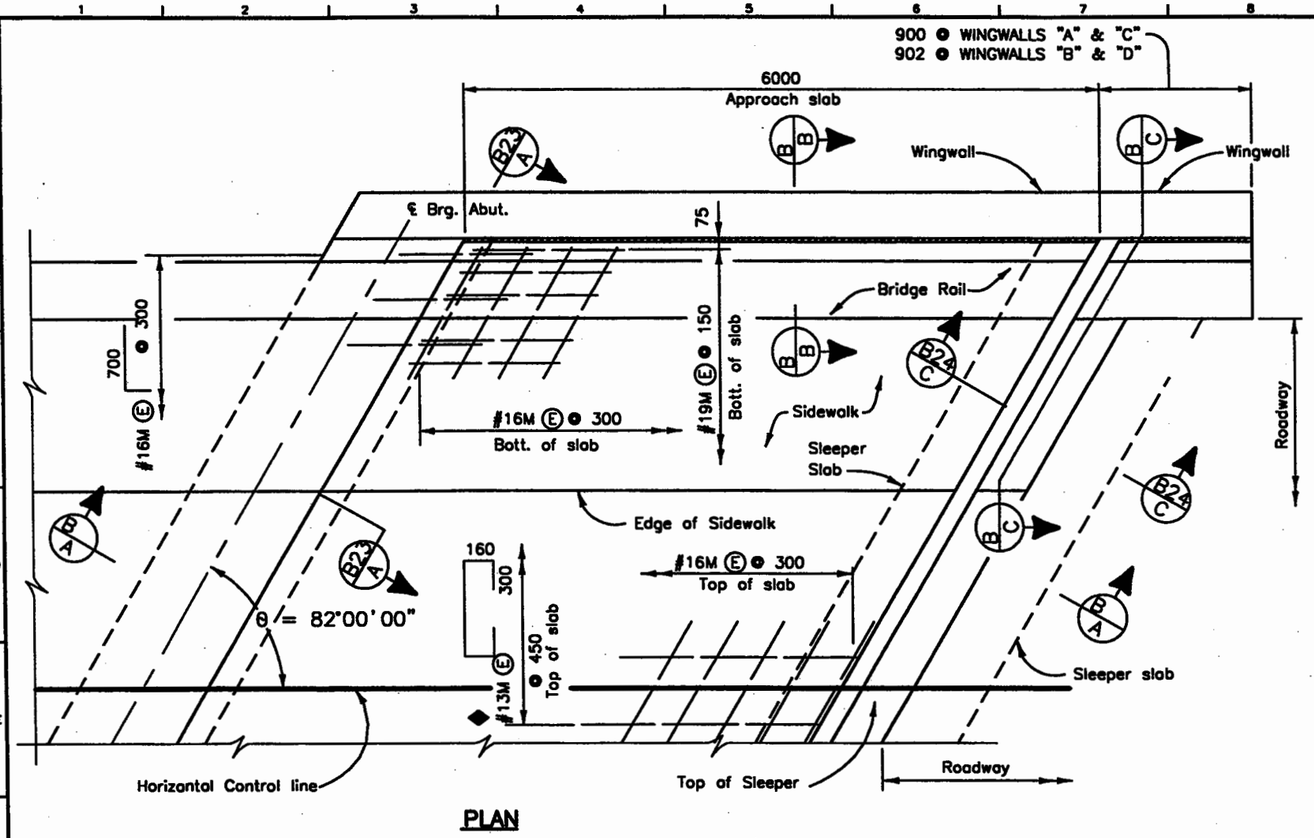

PLAN

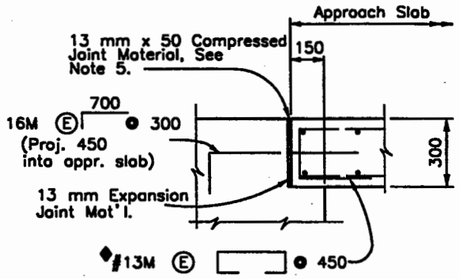

DETAIL "B"

NOTES:

1. Concrete Class D (Bridge) shall be used for approach slabs, sleepers, and sidewalks.
2. 13 mm expansion joint material shall meet A.A.S.H.T.O. Spec. M213.
3. For expansion device details see Sht. No. B23.
4. For curb and rail details see Sht. No. B20.
5. Compressed joint material shall be Pre-Compressed, Chemically Resistant, Open Cell Polyurethane Foam Sealant, Impregnated with a Water-Repellant Material, with Adhesive backing on both sides. The joint Material shall be Epoxied in place, and all splices sealed, as recamended by the supplier of the joint material. The cost shall be included in the cost of item 601 Class D Concrete

ACCEPTABLE COMPRESSED JOINT MATERIAL ALTERNATES
WILL-SEAL
SEAL-MATE #517

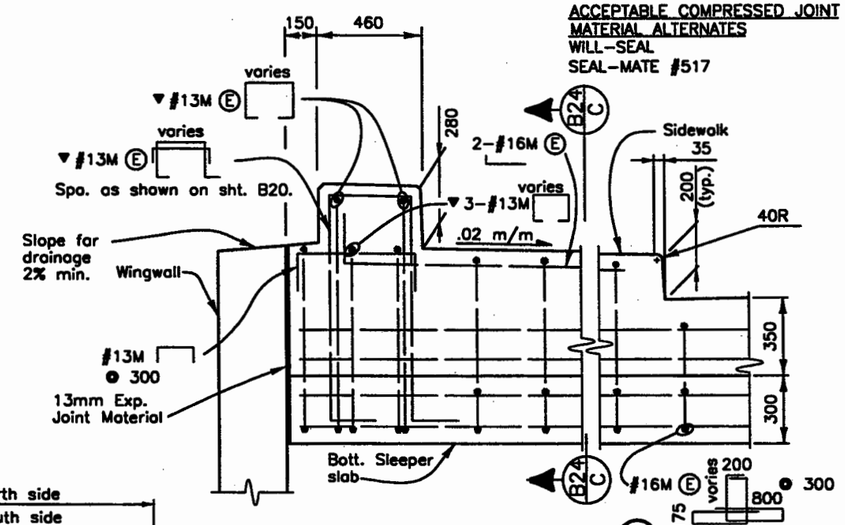

SECTION AT SLEEPER ENDS (B/C)

▼Items paid under Bridge Rail Type 10 (Special) See Sheet B20.

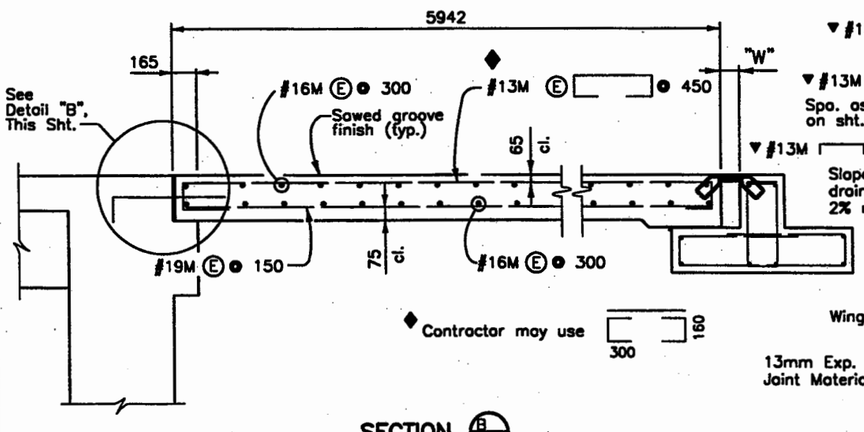

SECTION (B/A)

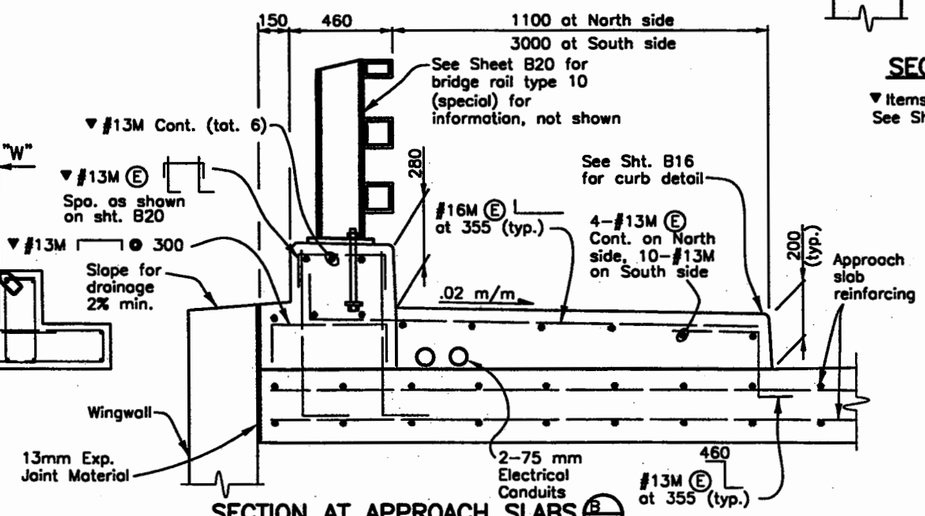

SECTION AT APPROACH SLABS (B/B)

▼Items paid under Bridge Rail Type 10 (Special) See Sheet B20.

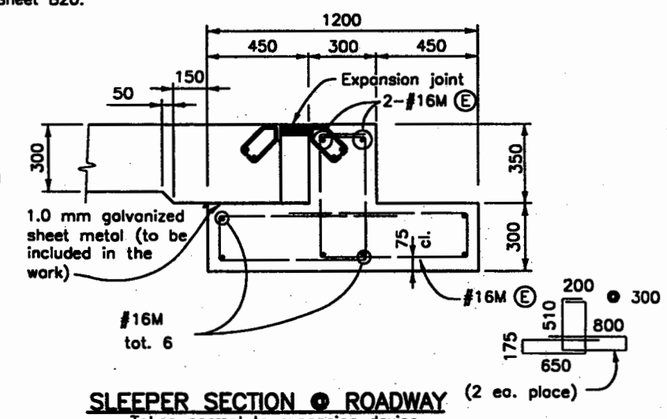

SLEEPER SECTION @ ROADWAY

Taken normal to expansion device

Computer File Information			
Creation Date:	01/17/00	Initials:	WJM
Last Modification Date:	10/06/00	Initials:	CMS
Full Path:	J:\97157\ACAD\SHEET\		
Drawing File Name:	D7157240.DWG		
Acad Ver.: R14	Scale: Varies	Units:	Metric

Sheet Revisions

Colorado Department of Transportation
4201 East Arkansas Avenue, Room 330
Denver, Colorado 80222-3400
Phone: 303-757-9352 FAX: 303-757-9197
Staff Bridge Branch

As Constructed
No Revisions: MAY 2 0 2004
Revised:
Void:

SOUTH CONNECTOR OVER CHEYENNE CREEK
APPROACH SLAB DETAILS

Designer: B. MARCATO
Detailer: R. DILLON
Sheet Subset: BRIDGE
Structure Numbers: I-17-MH
Subset Sheets: B22 of 29

Project No./Code
IM 0252-342
13390
Sheet Number 159

DESIGN		Date	DETAIL		Date	QUANTITIES		Date
Designed by	WJM	01/00	Detailed by	RAD	01/00	Quantities by	WJM	10/00
Checked by	KMA	01/00	Checked by	WJM	01/00	Checked by	RAD	10/00

Revision Dates					
3-94	8-94	8-95	1-97	3-98	(Preliminary Stage Only)

J:\97157\ACAD\SHEET\D7157240.dwg Wed Oct 25 15:17:17 2000 RAD