AS CONSTRUCTED		
NO REVISIONS	REVISED	VOID

FEDERAL ROAD REGION NO.	DIVISION	PROJECT NUMBER	SHEET NUMBER
VIII	COLORADO	BR 0243-043	29

REVISIONS		

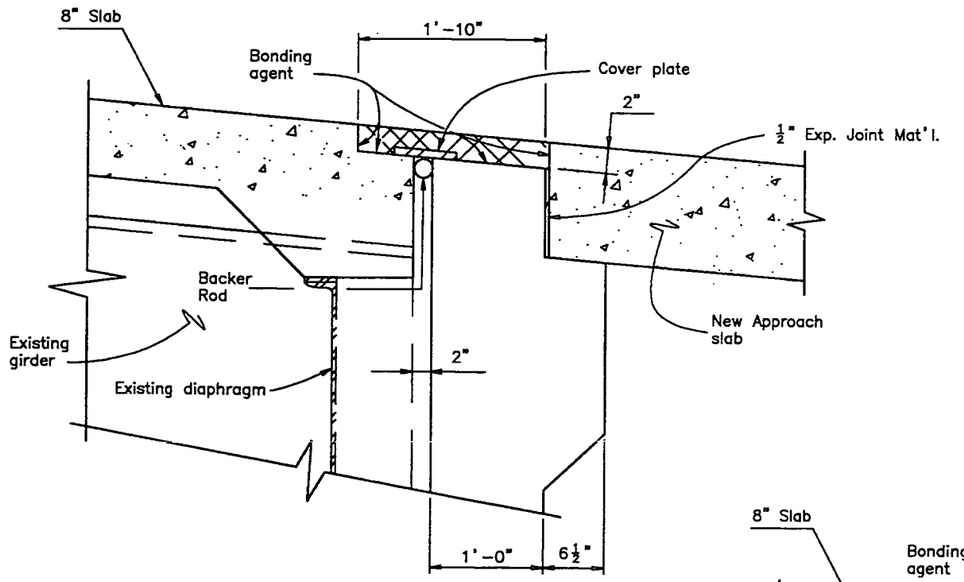

EXPANSION DEVICE AT ABUTMENTS

Place approach slab prior to expansion device.

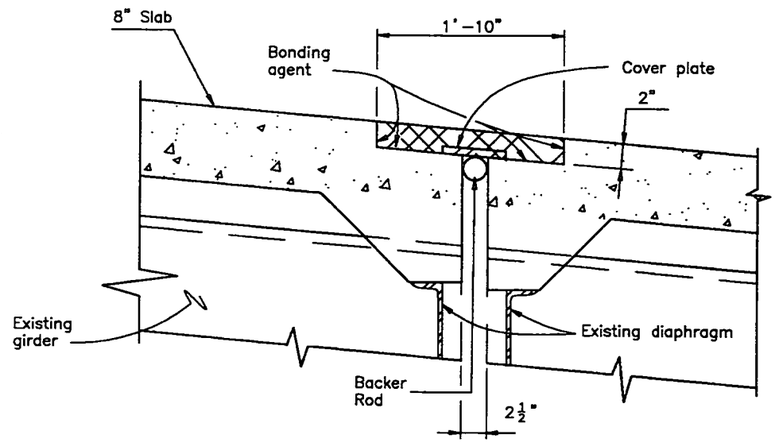

TYPICAL EXPANSION DEVICE AT JOINT 1 AND 2

NOTES:

½" expansion joint material shall meet A.A.S.H.T.O. Spec. M213.

The expansion joint system shall include all labor and materials to install the expansion joint according to the Manufacturer's directions and according to these plans.

The backer rod shall be secured and sealed according to the Manufacturer's directions.

The cover plate shall be the size and type recommended by the Manufacturer and installed in accordance with the Manufacturer's directions.

The joint bonding agent shall be the type recommended by the Manufacturer for the joint system being installed. It shall be applied according to the Manufacturer's recommendations.

All surfaces in joint opening shall be cleaned according to the Manufacturer's directions.

The joints shall be installed and compacted according to the Manufacturer's procedures.

The finished joint, after compacting, shall be flush with the top of the adjacent finished grade surface.

A representive of the Manufacturer shall be on site prior to installing the expansion joints and shall approve the methods and materials before work commences.

See Special Provisions for Bridge Expansion Device (0"-2")

ACCEPTABLE ALTERNATES

B J S SYSTEM
LINEAR DYNAMICS THORMA-JOINT
WATSON BOWMAN ACME EXPANDEX
PAVE TECH INTERNATIONAL, INC. MATRIX 502

Design			Detail			Quantities		
	INITIAL	DATE		INITIAL	DATE		INITIAL	DATE
Designed By	M C	08/95	Detailed By	J S V	08/95	Quantities By	J S V	07/95
Checked By	Z A	08/95	Checked By	S L W	08/95	Checked By	M C	07/95

COLORADO
DEPARTMENT OF TRANSPORTATION

EXPANSION DEVICE DETAILS
(0 - 2 INCH)

Designer M. Condiotti	Structure Numbers	I-17-GN
Detailer J. Virdi		
Drawing Number B 9	of 18	Drawings

Revision Dates	(Preliminary Stage Only)						