REVISIONS	AS CONSTRUCTED	FEDERAL ROAD REGION NO.	DIVISION	PROJECT NUMBER	SHEET NUMBER
	NO REVISIONS / REVISED / VOID	VIII	COLORADO	BR 0243-043	32

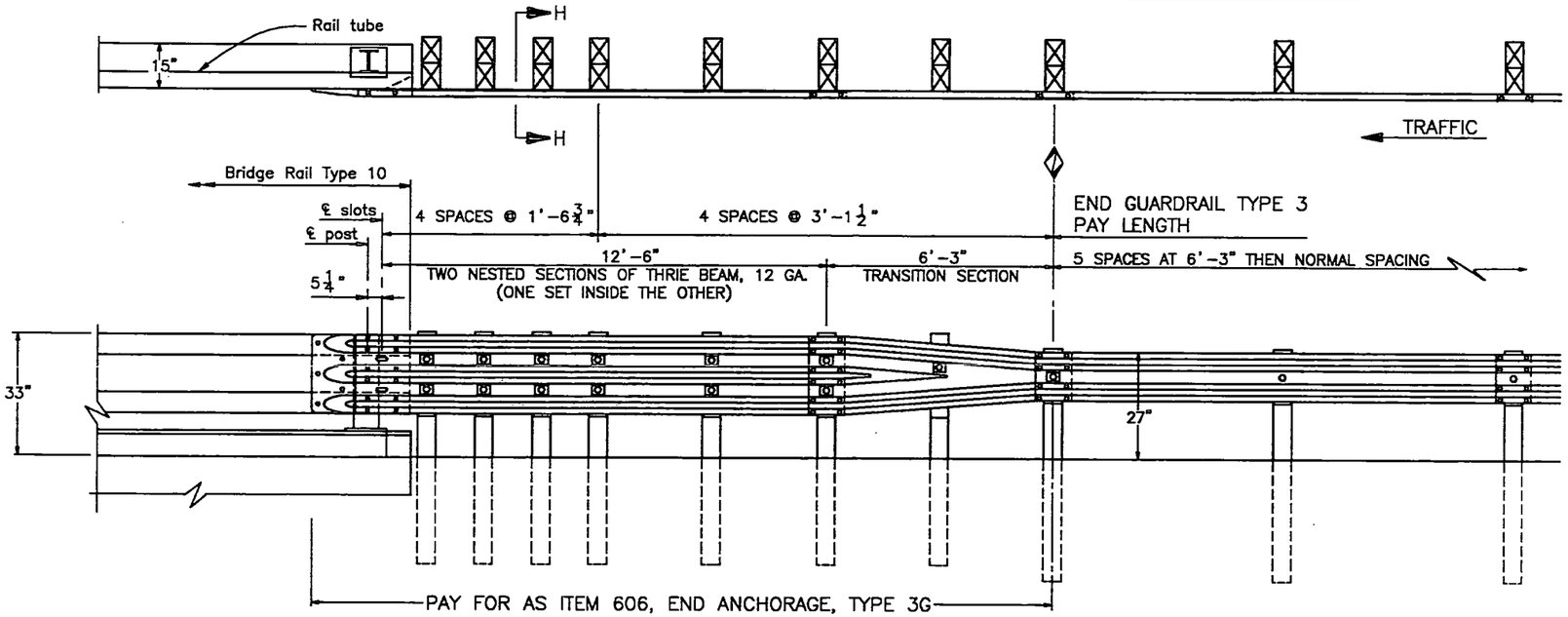

TYPE 3G END ANCHORAGE

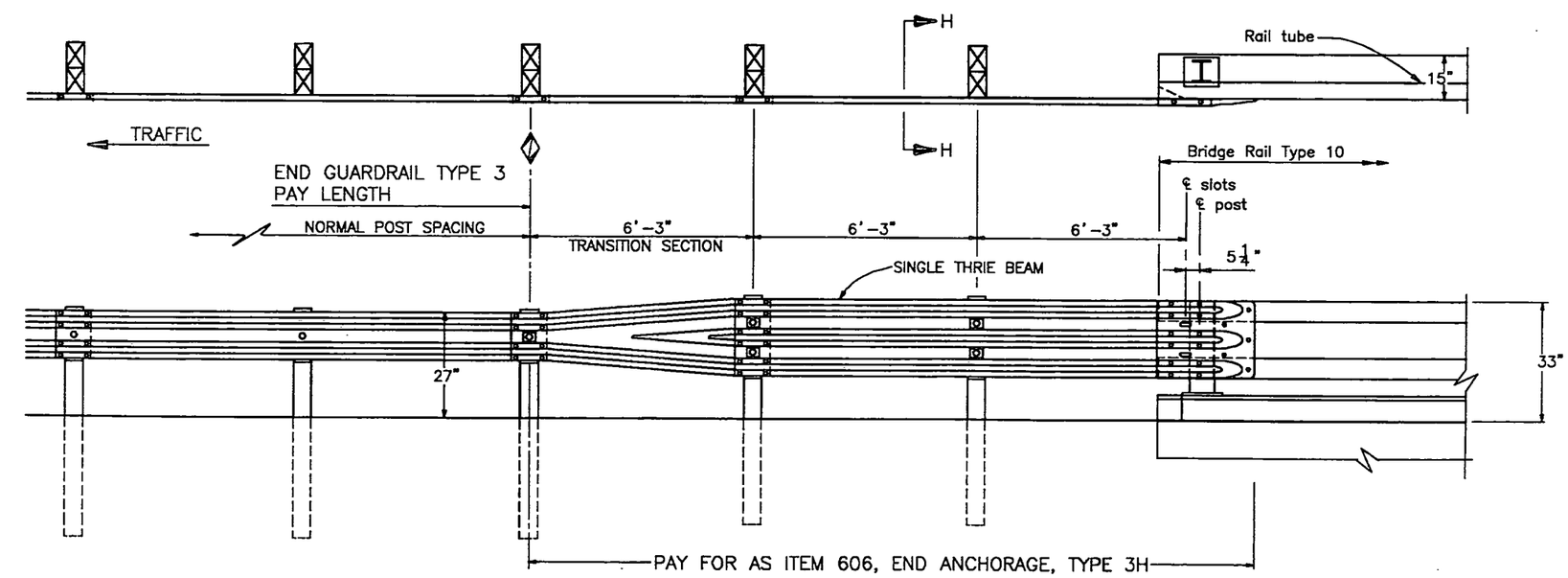

TYPE 3H END ANCHORAGE

NOTES

TYPE 3G END ANCHORAGE IS FOR USE AT BOTH ENDS OF BRIDGES ON TWO-WAY ROADS AND AT THE APPROACH END OF BRIDGES ON ONE-WAY ROADS.

TYPE 3H END ANCHORAGE IS FOR USE AT THE TRAILING END OF BRIDGES ON ONE-WAY ROADS.

⊡ THIS SHOWS RECTANGULAR WASHER IS REQUIRED UNDER POST BOLT HEAD.

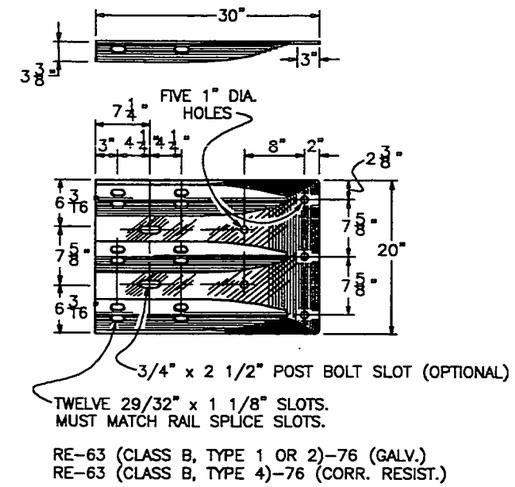

THRIE BEAM
TERMINAL SECTION (CONNECTOR)

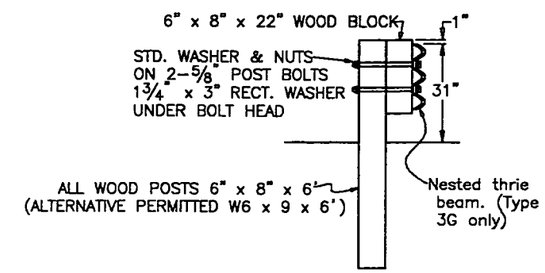

SECTION H-H

BACKUP PLATE NOT REQUIRED AT GUARDRAIL POSTS ON TYPE 3G AND 3H.

COLORADO
DEPARTMENT OF TRANSPORTATION

BRIDGE RAIL TYPE 10

Designer	M Condiotti	Structure Numbers	I-17-GN
Detailer	J Virdi		
Drawing Number B	12 of 18		Drawings

Revision Dates		(Preliminary Stage Only)				
03-92	09-92					

Design	INITIAL	DATE	Detail	INITIAL	DATE	Quantities	INITIAL	DATE
Designed By	M C	05/95	Detailed By	J S V	05/95	Quantities By	J S V	07/95
Checked By	Z A	09/95	Checked By	S L W	09/95	Checked By	M C	07/95

Jan 31, 19.. 13:49 C:\VIRDI\17GN\BR10B.JSV