Z CONSTRUCTED		
NO REVISIONS	REVISED	VOID

FEDERAL ROAD REGION NO.	DIVISION	PROJECT NUMBER	SHEET NUMBER
VIII	COLORADO	BR 0243-043	35

REVISIONS		

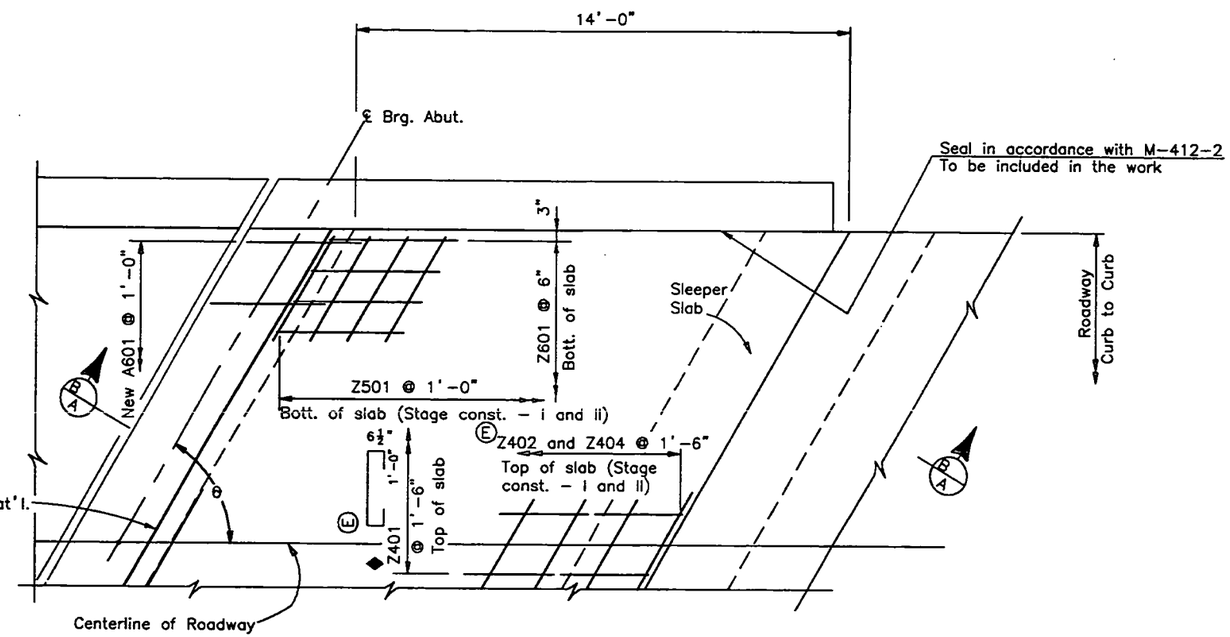

PLAN

NOTES:

Concrete Class D (Bridge) shall be used for approach slabs.

½" expansion joint material shall meet A.A.S.H.T.O. Spec. M213.

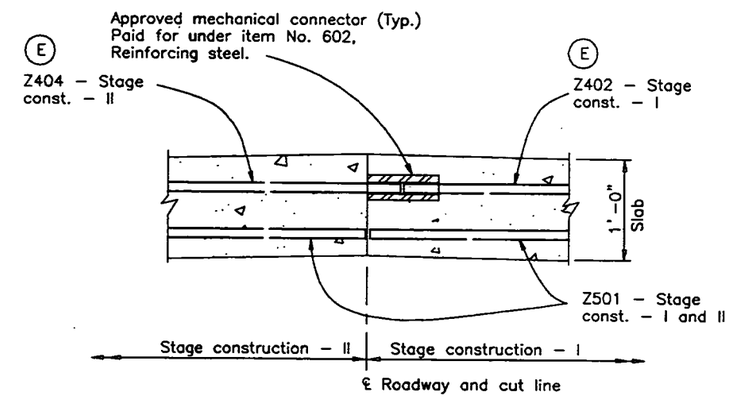

STAGE CONSTRUCTION DETAIL

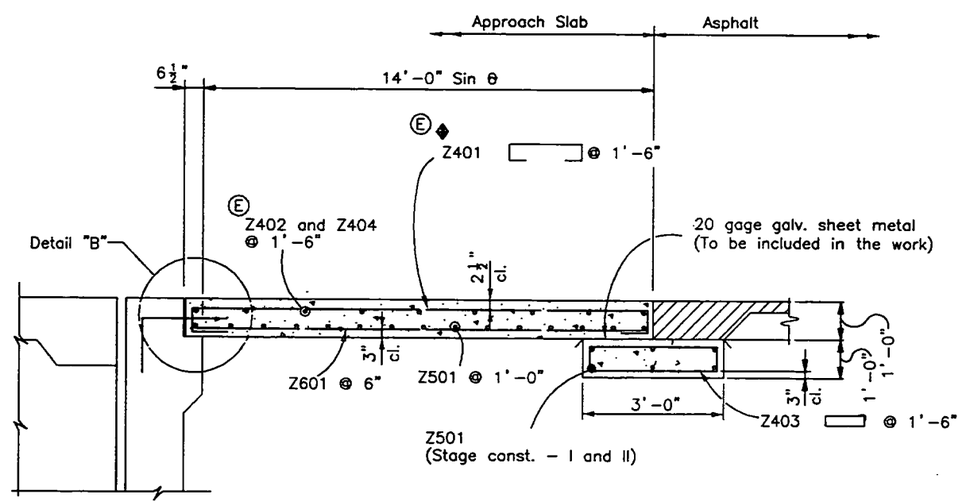

SECTION B/A

◆ Contractor may use [ ] 1'-0" 6½" .

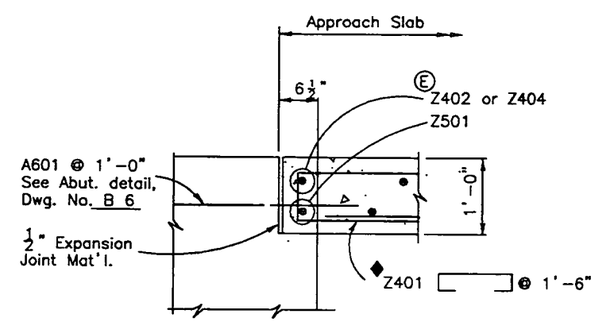

DETAIL "B"

Quantities	INITIAL	DATE
Quantities By	J S V	07/95
Checked By	W C	07/95

	INITIAL	DATE
By	J S V	07/95
By	S L W	09/95

Design	INITIAL	DATE
Designed By	M C	07/95
Checked By	Z A	09/95

COLORADO
DEPARTMENT OF TRANSPORTATION

APPROACH SLAB DETAILS

Designer M. Condiotti	Structure Numbers	I-17-GN
Detailer J Virdi		
Drawing Number B 15 of 18 Drawings		

Revision Dates (Preliminary Stage Only)							
12-87	1-91	8-91					

Feb 01, 1997 [illegible]:39 C:\VIRDIJ\I17GN\APSL2.JSV