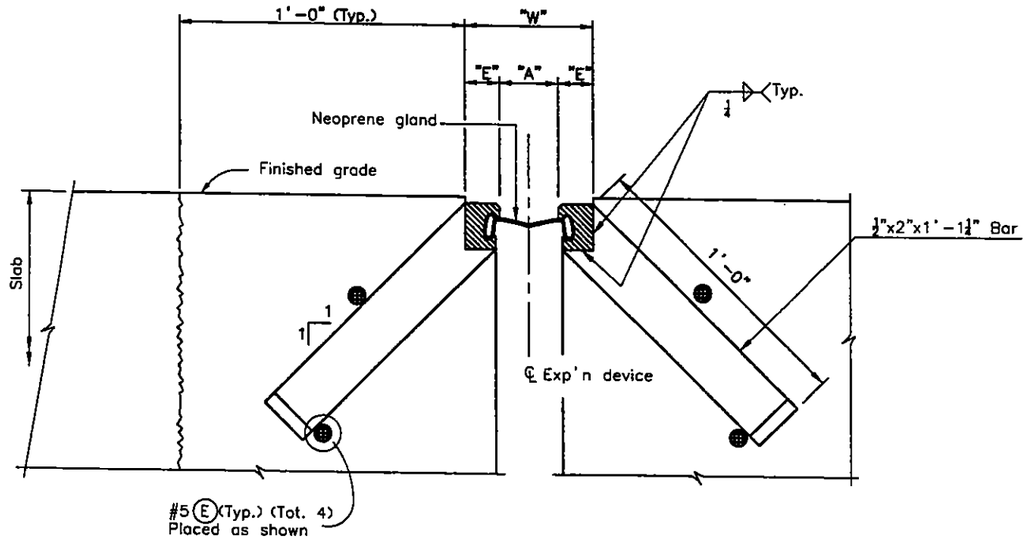

SECTION THRU STRIP SEAL BRIDGE EXPANSION DEVICE

Section taken perpendicular to ℄ exp'n device.

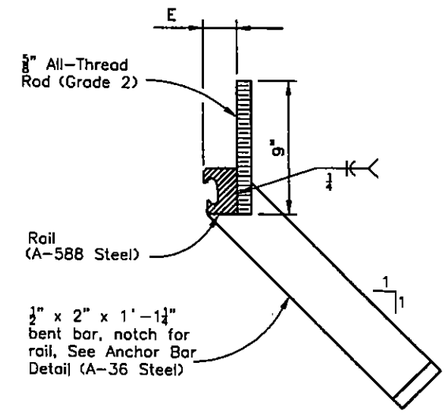

ANCHORAGE DETAIL

NOTES:

The expansion device shall be installed on grade, parallel to the slope and grade of the deck.

After the concrete has attained initial set, the attachments used to hold the expansion device assembly in it's proper position shall be removed.

Do not paint steel surfaces in contact with either concrete or seal.

"W" and "E" dimensions are dependent upon the particular expansion device supplied, and shall be shown on the working drawings.

See table for dimensions "A" and "W"; interpolate as needed. Do not install the gland until dimension "A" has opened up to at least 1 1/2". Use section 518.10(b) in the Standard Specifications to determine the structure temperature.

The neoprene gland shall be installed in one piece in accordance with section 518 of the Standard Specifications.

See section 518 in the Standard Specifications for water tight integrity testing requirements.

ACCEPTABLE EXPANSION DEVICE ALTERNATES

D.S. Brown A2R400-SSA2
WABO SE400 Type A
Epoxy Industries S400-A

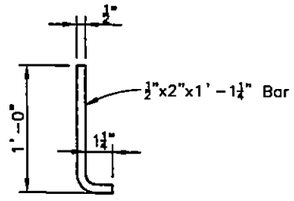

TYPICAL ANCHOR BAR DETAIL

Str. Temp	"A"	"W" *
-30° F	3 7/8"	6 3/8"
0° F	3 3/8"	5 7/8"
30° F	2 13/16"	5 5/16"
60° F	2 5/16"	4 13/16"
90° F	1 3/4"	4 1/4"
120° F	1 1/4"	3 3/4"

* For E = 1 1/4" (min.)

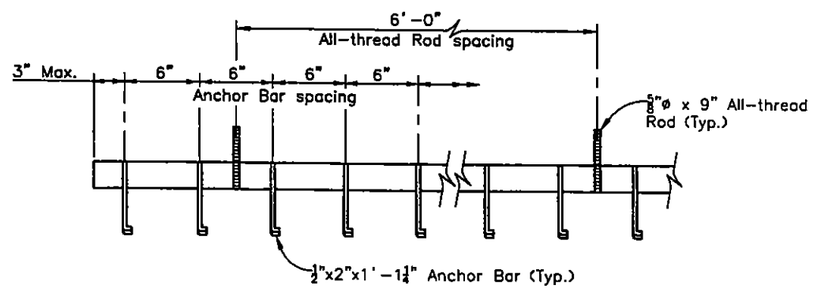

ANCHOR BAR SPACING

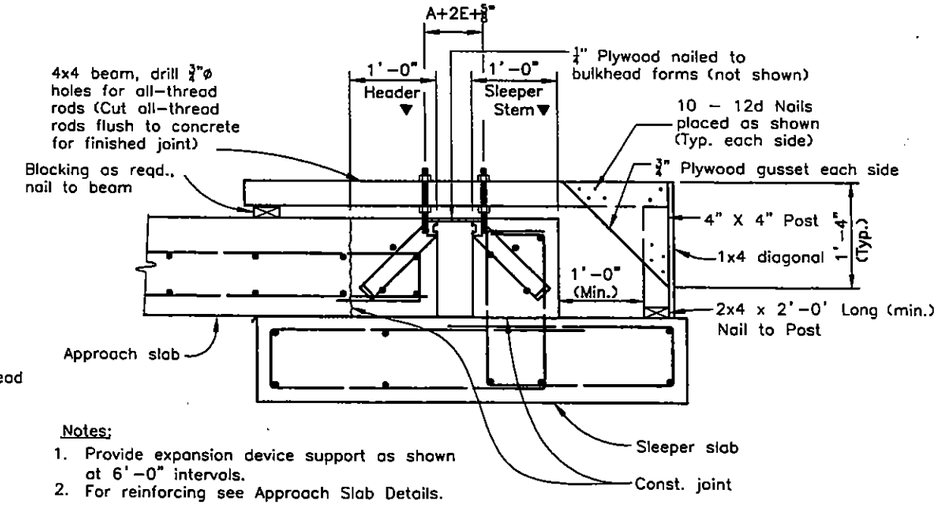

Notes:

1. Provide expansion device support as shown at 6'-0" intervals.
2. For reinforcing see Approach Slab Details.

▼ Concrete shall be placed after expansion device has been adjusted to proper grade and approved by engineer.

MINIMUM SUPPORT BRACKET REQUIREMENTS

DESIGN	INITIAL	DATE
DESIGNED BY	TJB	08/02
CHECKED BY	KMG	08/02

DETAIL	INITIAL	DATE
DETAILED BY	PMB	08/02
CHECKED BY	TJB	08/02

QUANTITIES	INITIAL	DATE
QUANTITIES BY	TJB	08/02
CHECKED BY	EVS	08/02

09/09/02 14:37

T:\CAD\PLANSHTS\PACKAGE A\STRUCTURES\MJ-KC\SHBRI17MJB5181.DWG

Computer File Information			
Creation Date:	07/10/02	Initials:	PAF
Last Modification Date:	8/30/02	Initials:	PMB
Full Path:	PACKAGE A\STRUCTURES\MJ-KC		
Drawing File Name:	SHBRI17MJB5181.DWG		
Acad. Ver. LDD2	Scale:	Units: Feet	

Index of Revisions

R-		
R-		
R-		
R-		
R-		

DOT
DEPARTMENT OF TRANSPORTATION
Region 2

URS
9960 Federal Drive, Suite 300
Colorado Springs, CO. 80921
(719) 531-0001
Fax (719) 531-0007

As Constructed
No Revisions:
Revised:
Void:

BRIDGE EXPANSION DEVICE
(0-4 INCH)

Designer:	T. BOONE	Structure Numbers	I-17-MJ
Detailer:	P. FOSTER		(N.B. POWERS)
Sheet Subset:	BRIDGE	Subset Sheets:	B33 of 41

Project No./Code
STU R200 -107
13540
Sheet Number 227