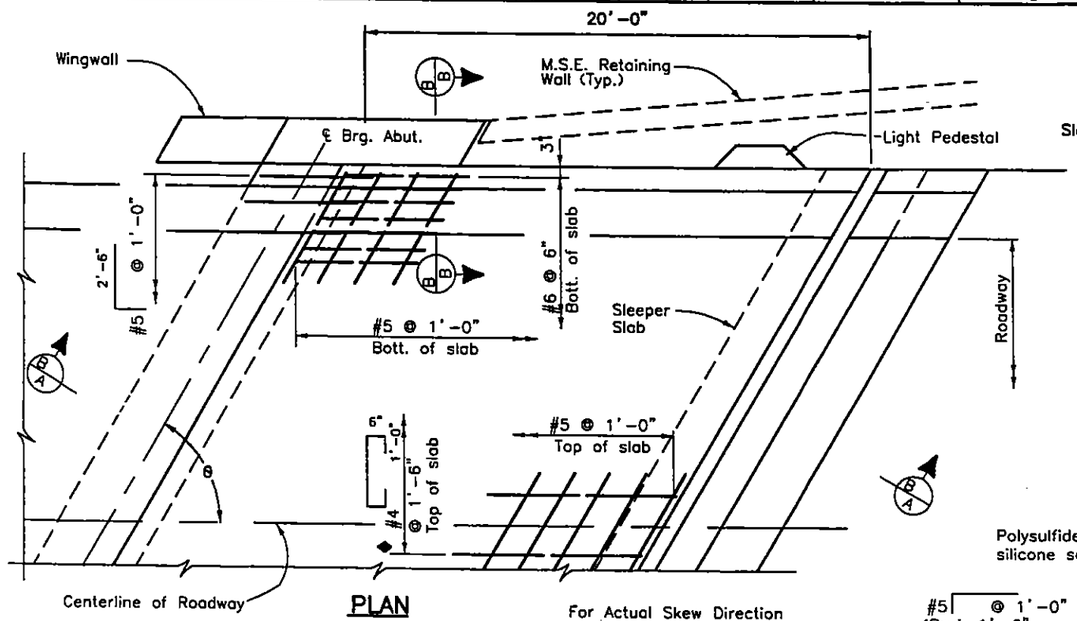

PLAN

For Actual Skew Direction See Construction Layout.

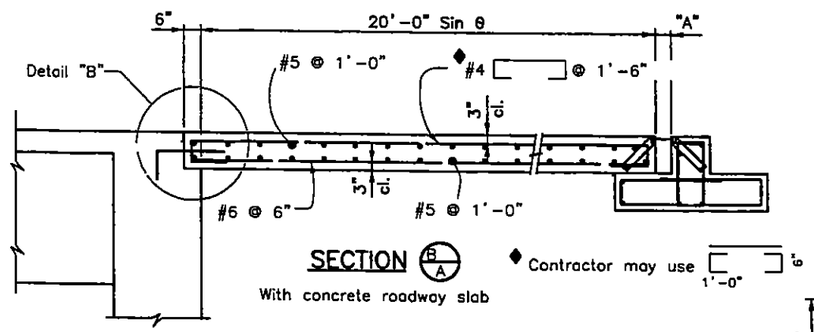

SECTION (B/A)

With concrete roadway slab

◆ Contractor may use [ ] 6" / 1'-0"

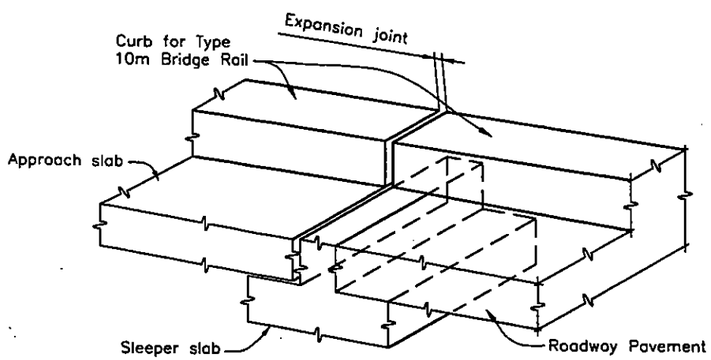

VIEW TYPE 10M RAIL

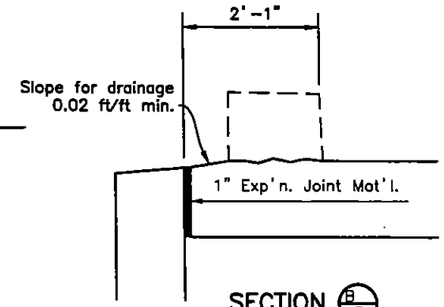

SECTION (B/B)

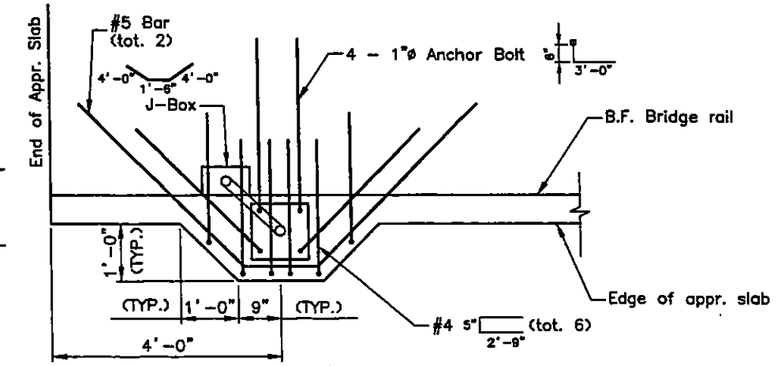

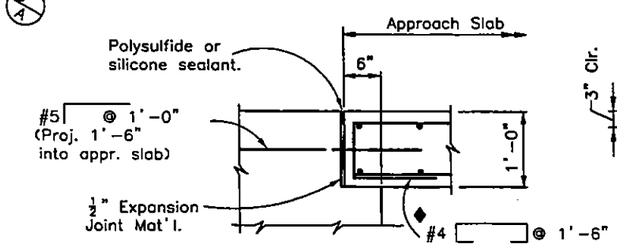

DETAIL "B"

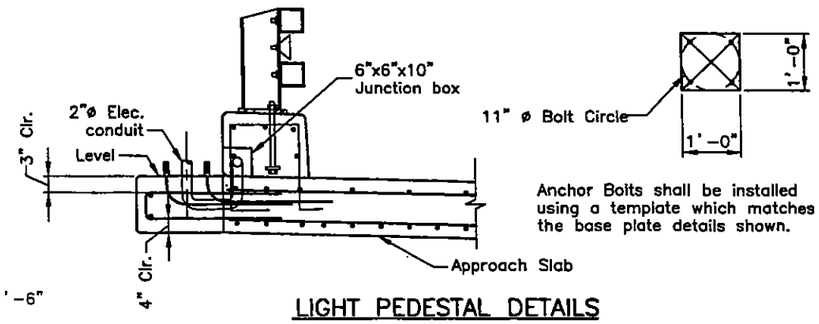

Anchor Bolts shall be installed using a template which matches the base plate details shown.

LIGHT PEDESTAL DETAILS

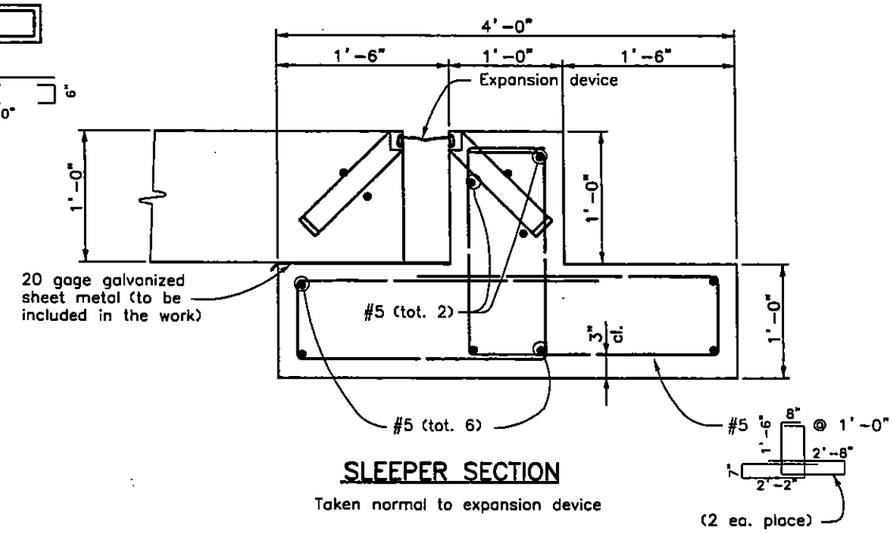

SLEEPER SECTION

Taken normal to expansion device

NOTES:

Concrete Class D (Bridge) shall be used for approach slabs.

Expansion joint material shall meet AASHTO Spec. M213.

For sleeper staking and elevation data see Dwg. No. B-27.

For expansion device details see Dwg. No. B24 – B25.

For rail details see Dwg. No. B20 – B21.

For M.S.E. wall details see Retaining Wall Plans.

J-Box, Anchor Bolts and installation of items will be included in the bid price for 2" Electrical Conduit (Plastic).

DESIGN	INITIAL	DATE	DETAIL	INITIAL	DATE	QUANTITIES	INITIAL	DATE
DESIGNED BY	CNL	12/01	DETAILED BY	DTO	01/02	QUANTITIES BY	CNL	01/02
CHECKED BY	EVS	12/01	CHECKED BY	MAL	01/02	CHECKED BY	EVS	01/02

T:\CAD\PLANSHTS\PACKAGE A\STRUCTURES\NU-PC\SHBRI17NUB6011EC.DWG 09/09/02 11:08

Computer File Information			
Creation Date:	10/11/01	Initials:	PF
Last Modification Date:	8/30/002	Initials:	PMB
Full Path:	PACKAGE A\STRUCTURES\NU-KC		
Drawing File Name:	SHBRI17NUB6011EC.DWG		
Acad. Ver. LDD2	Scale:	Units: Feet	

(R-) (R-) (R-) (R-) (R-)

Index of Revisions

DOT DEPARTMENT OF TRANSPORTATION Region 2

URS
9960 Federal Drive, Suite 300
Colorado Springs, CO. 80921
(719) 531-0001
Fax (719) 531-0007

As Constructed
No Revisions:
Revised:
Void:

APPROACH SLAB DETAILS

Designer: C. LIVSEY
Detailer: D. OBEROSLER
SheetSubset: BRIDGE
Structure Numbers: I-17-NU (RAMP A)
Subset Sheets: B22 of 27

Project No./Code
STU R200 -107
13540
Sheet Number 162