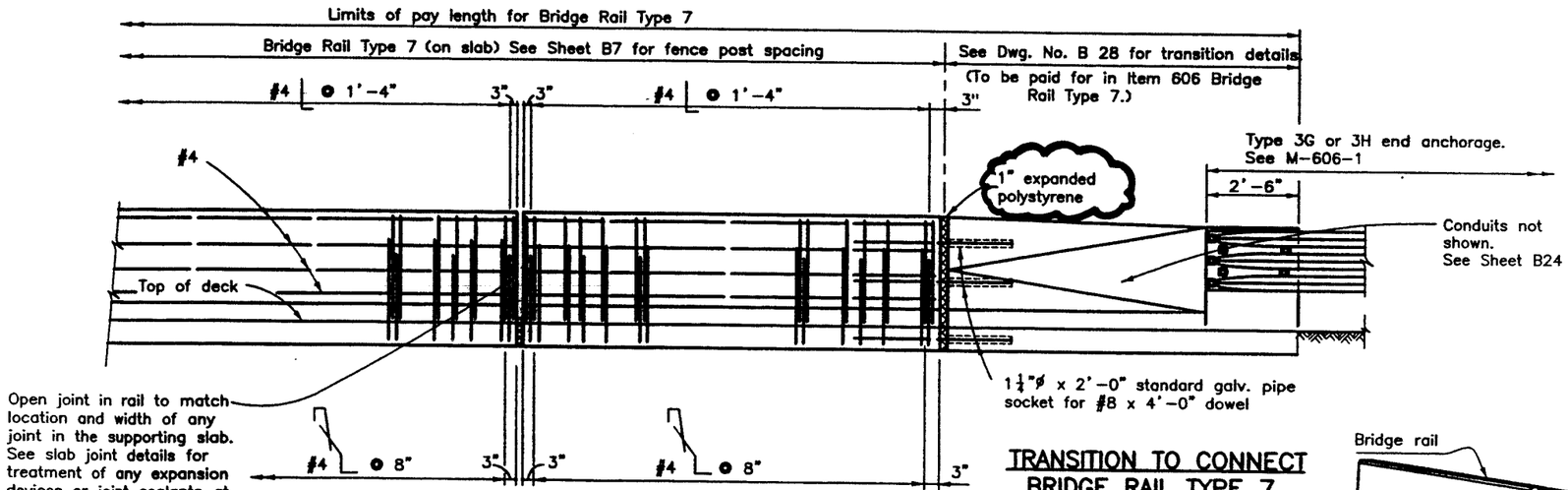

ELEVATION

#8 dowels between bridge rail and guardrail are not required when the guardrail is placed on the sleeper slab.

TRANSITION TO CONNECT BRIDGE RAIL TYPE 7 TO GUARD RAIL

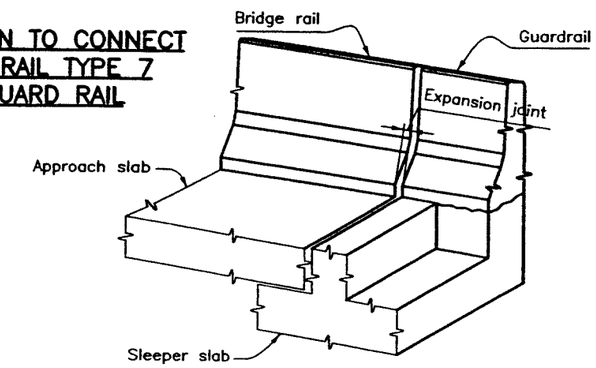

ISOMETRIC VIEW

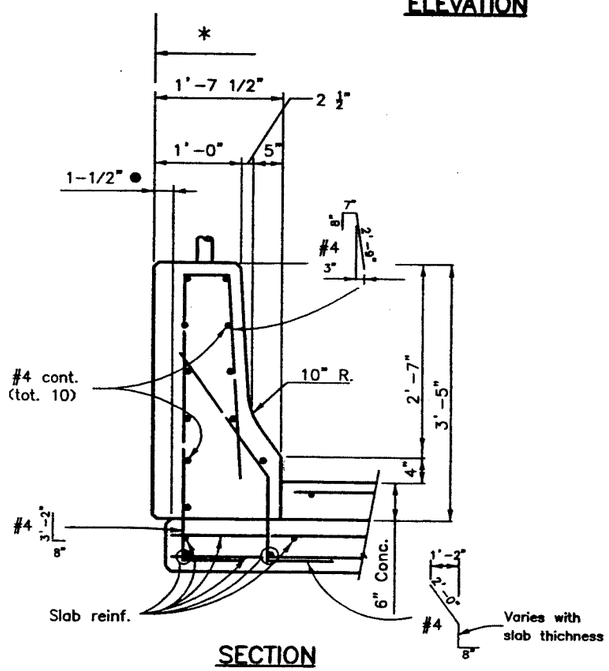

SECTION

On slab with sidewalk (right side)

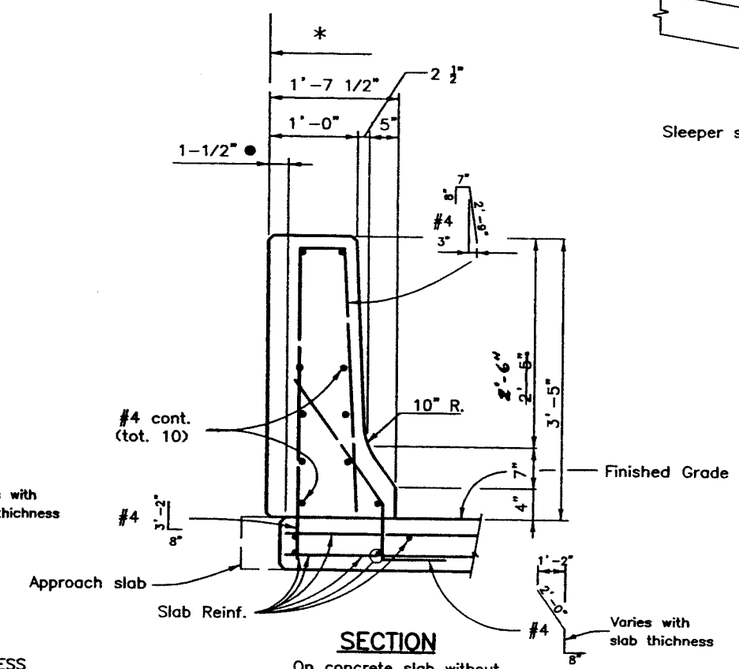

SECTION

On concrete slab without sidewalk (left side)

* Edge of deck as shown in Sheets B7 and 32-37

● ADDITIONAL RAIL THICKNESS FOR ARCHITECTURAL TREATMENT (SEE ARCHITECTURAL DETAILS)

NOTES:

Backfill wingwalls and retaining walls before barrier is placed.

All bridge rail concrete shall be Class D.

Longitudinal reinforcement shall stop at all expansion joints.

Bridge rail shall be constructed plumb.

See Std. M-606-1 and M-606-13 for Guard Rail Type 3 details and additional details of transition not shown in bridge plans.

Concrete and reinforcing steel shall conform to the requirements of Sections 601 and 602. Payment will be made under Item 606, Bridge Rail Type 7.

The surface of the rail shall be tested with a 10 foot straightedge laid along the surface in the longitudinal direction. Deviation of the concrete surface from the straightedge shall be less than 1/4" plus allowance for roadway horizontal and vertical curvature, if any.

DESIGN DATA

Reinforced Concrete:

Class D Concrete: f'_c = 4,500 psi
Reinforcing Steel: f_y = 60,000 psi

INFORMATION ONLY

Description	Unit	Per Lin. Ft.
Concrete Class D	Cu. Yd.	0.12
Reinforcing Steel (Epoxy)	Lb.	16.2

Detail	INITIAL	DATE
Detailed By	RFH	10-00
Checked By	JWD	10-00

Quantities	INITIAL	DATE
Quantities By	JWD	5-01
Checked By	MAH	5-01

Design	INITIAL	DATE
Designed By	JWD	5-00
Checked By	MAH	10-00

Revision Dates (Preliminary Stage Only)

Computer File Information			
Creation Date:	9/91	Initials:	KDH
Last Modification Date:	05/10/01	Initials:	CM
Full Path:	F:\PROJECT\00140\BRIDGE\PLANS		
Drawing File Name:	B6067B.DWG		
Acad Ver. 2000	Scale:	Units:	English

Sheet Revisions

Colorado Department of Transportation
4201 East Arkansas Avenue, Room 330
Denver, Colorado 80222-3400
Phone: 303-757-9352 FAX: 303-757-9197
Staff Bridge Branch

As Constructed
No Revisions: / /
Revised: 7/3/2003
Void:

BRIDGE RAIL TYPE 7 (SPECIAL) (W/GUARDRAIL TYPE 3)

Designer: John DeLand
Detailer: R. Hooker
Sheet Subset: Bridge
Structure Numbers: J-18-Q
Subset Sheets: B 27 of

Project No./Code
IM 0851-002
12390
Sheet Number 57