STATE OF COLORADO
STATE DEPARTMENT OF HIGHWAYS
DIVISION OF HIGHWAYS
D O H FORM NO 117
REV APR 1986

AS CONSTRUCTED					
NO REVISIONS		REVISED	7/20/92	VOID	

FEDERAL ROAD REGION NO.	DIVISION	PROJECT NUMBER	SHEET NUMBER
VIII	COLORADO	ID 70-2 (143)	216

REVISIONS		

GENERAL NOTES

All work ~~shall be~~ WAS done according to the Standard Specifications and Special Provisions of the Division of Highways, State of Colorado, applicable to the project.

Structure excavation & backfill ~~shall be~~ WAS in accordance with plans and special provisions.

For Structure Number installation, See Standard S-614-12.

All exterior structural steel surfaces ~~shall be~~ WERE Shop Sandblasted as per SSPC-SP6 to remove mill scale and produce uniform weathering. Field touch up Sandblasting ~~will~~ WAS not be paid for separately and ~~shall be~~ WAS included in the work.

Paint all structural steel within 10 feet of expansion device (including crossframes & diaphragms) except exterior faces of exterior girders. The color ~~shall be~~ WAS as directed by the Engineer.

Expansion Joint Material ~~shall meet~~ MET AASHTO Specification M-213.

All structural steel ~~shall be~~ WAS ASTM A-588 (AASHTO M-222) unless otherwise noted.

All bolts ~~shall be~~ WERE ASTM A-325 high strength bolts (AASHTO M-164) Type 3, 7/8" ϕ unless noted otherwise. Bolt Spacing and edge distances ~~shall conform~~ CONFORM to AASTO Specifications.
All exposed concrete surface ~~shall~~ received a color coating as per Section 601- Structural Concrete Coating.

No welding of any kind ~~shall be~~ WAS permitted on the flanges of steel girders unless specifically called for on the plans.

Grade 60 epoxy coated is required for all reinforcing bars (unless otherwise noted.)

The following table gives the minimum splice lengths for reinforcing bars unless shown or noted otherwise.

Bar Size	#4	#5	#6	#7	#8	#9	#10	#11
Splice length for Class D Concrete	1'-3"	1'-7"	1'-10"	2'-3"	2'-11"	3'-9"	4'-9"	5'-10"

A conceptual constructability report will be available from C.D.O.H.

The Contractor ~~shall be~~ WAS responsible for the stability of the Structure during Construction.

Abbreviations:

e.f. = each face
n.f. = near face
f.f. = far face
t.f. = top face
b.f. = bottom face
n.c. = non-epoxy coated
U.N.O. = unless noted otherwise

CROSS REFERENCE DRAWING NUMBER WITHOUT PREFIX BAL

SECTION OR DETAIL IDENTIFICATION

BRIDGE DESCRIPTION

12-Span (104'-10", 10-130'-0", 105'-10")
Bridge Welded Steel I-Girders,
Composite & Continuous.
35'-2 1/2" Abutment No.1 to 67'-11 1/2"
Pier No. 13 Roadway Barrier to Barrier.
Bridge Rail Type 8.
(I-70 East Bound in Glenwood Canyon over River Bank).

DESIGN DATA

1983 and Interim AASHTO Specifications. Working Stress Design Method

Live Load: AASHTO HS 20-44 & Interstate Alternate.

Dead Load: Assumes 48 lbs. per square foot for bituminous pavement.

Reinforced Concrete:
All bars : f_s = 24,000 p.s.i., f_y = 60,000 p.s.i.

Concrete Class D: f_c = 1800 p.s.i. n = 8 , f'_c = 4500 p.s.i.

Structural Steel:

AASHTO M222 (ASTM A588): f_s = 27000 p.s.i., f_y = 50,000 p.s.i.
(Weathering Steel)

Prestressing Steel: $F's$ = 150,000 p.s.i. Deformed Bars (ASTM A-722)
$F's$ = 270,000 p.s.i. Strands (AASHTO M203)

INDEX OF DRAWINGS

Drawing No.		
	BAL-1	General Information
	BAL-2	Summary of Quantities
BAL-3 &	BAL-4	General Layout
	BAL-5	General Layout, Riprap and Backfill Details
BAL-6 thru	BAL-8	Construction Layout & Pier Layout
BAL-9 &	BAL-10	Abutment No.1
	BAL-11	Pier Nos. 2,3,4,5,6,7,8, 12N & 12S
	BAL-12	Pier No.9
	BAL-13	Pier No.10
	BAL-14	Pier No.11
	BAL-15	Pier No. 13N & 13S
BAL-16 &	BAL-17	Pier 13N and Pier 13S Cap Girder Details
BAL-18 &	BAL-19	Bearing Device (Type III)
BAL-20 thru	BAL-22	Framing Plan and Girder Elevation
BAL-23 &	BAL-24	Dead Load Deflection Diagram
	BAL-25	Field Splice and Stiffener Details
	BAL-26	Cross Frame Details
	BAL-27	End Plate Separator Details
	BAL-28	End Diaphragm at Pier 13
	BAL-29	Pier 2,3,4,5,6,7 & 8 Cap Girder Details
	BAL-30	Pier 9 Cap Girder Details
	BAL-31	Pier 10 Cap Girder Details
	BAL-32	Pier 11 Cap Girder Details
	BAL-33	Pier 12N & 12S Cap Girder Details
BAL-34 thru	BAL-36	Deck Plan and Typical Section
	BAL-37	Deck Plan Placing Sequence and Sections
BAL-38 &	BAL-39	Miscellaneous Superstructure Details
	BAL-40	Attenuator Support Details
BAL-41 &	BAL-42	Bridge Expansion Device
BAL-43 &	BAL-44	Bridge Rail Type 8
BAL-45 &	BAL-46	Conduit Layout
	BAL-47	Conduit Sections
BAL-48 thru	BAL-52	Bridge Deck Elevations
	BAL-53	Roadway Approaches

MEHEEN-WEIDLINGER ENGINEERS INC.

INITIAL	DATE	
HJM	3-93	Designed By
RAO	3-93	Checked By
KCP	3-93	Detailed By
		Checked By
		Quantities By

Reviewed By:
BRIDGE ENGINEER DATE

DIVISION OF HIGHWAYS

GENERAL INFORMATION

STATION 1325+44.90 to
STATION 1340+60.90 (Gore)
NEAR Glenwood Springs SEC. 20 T 5S R 87W
Designer H. J. Meheen | Structure Numbers | F-08-AL(E.B.MAINLINE)
Detailer K. Pistorius
Drawing Number BAL-1 of 53 Drawings

Revision Dates (Preliminary Stage Only)

COLORADO
PARTMENT OF HIGHWAYS
OF HIGHWAYS:
FORM NO. 117:
1983:

AS CONSTRUCTED					
NO REVISIONS	7 | 20 | 92	REVISED		VOID	

FED. ROAD REGION	DIVISION	PROJ. NO.	SHEET NO.	TOTAL SHEETS
VIII	COLO.	ID 70-2(143)	218	

REVISIONS			

INITIAL	DATE
DESIGNED BY H.J.M.	7-88
CHECKED BY O.G.H.	9-89
DETAILED BY S.K.P.	8-88

	CHECKED BY	R.A.O.	3-89
	QUANTITIES BY		
	CHECKED BY		

CURVE 97

△	= 51°59'00.0"
TS	= 555.60
LS	= 280.000
θS	= 9°27'00.0"
TC	= 252.105
LC	= 490.12
DC	= 6°45'00.0"
RC	= 848.83
Max.S	= 0.078 'I Ft.
MDS	= 40 M.P.H.

Note:
* Structure No. F-08-AL Curve 97 inside shoulder widening of 1.7' required from Sta. 1325+40.30 to Sta. 1330+30.43 with transitions to normal shoulder from Sta. 1325+40.30 to Sta. 1322+60.30 and from Sta. 1330+30.43 to Sta. 1333+10.43

TO GLENWOOD SPRINGS

Sta. 1325+32.68 Begin Bridge Structure F-08-AL
S.C. Sta. 1325+45.73
Sta. 1325+48.57 ℄ Brg. Abut. 1

For Riprap Placement Details at Abutment No. 1 See Drawing No. BAL-5

EXISTING US HIGHWAY 6

C.S. Sta. 1330+08.48

T.S. Sta. 1332+88.48

T.S. Sta. 1332+99.42

Existing 24" C.M.P.

MATCH LINE Sta. 1333+85.00 For Continuation See Drawing No. BAL-4

5.2' Shld. | 12' Lane | 6' Shld.

3.6' Shld. | 12' Lane | 6' Shld.

Top of Slope (Typ.)

Profile Grade Line (W.B. Mainline)

℄ of Structure

Top of Slope (Typ.)

CURVE 97

STRUCTURE NO. F-08-AL

S.C. Sta. 1325+40.30 * Inside Shoulder Taper

Sta. 1326+53.40 ℄ Pier 2

Sta. 1327+83.40 ℄ Pier 3

Toe of Slope (Typ.)

Sta. 1329+13.40 ℄ Pier 4

PROPOSED BIKEPATH & SCOUR PROTECTION BY OTHERS

Flow COLORADO RIVER

C.S. Sta. 1330+30.43 * Begin inside Shoulder Taper

Project Line & Profile Grade Line (E.B. Mainline)

Sta. 1330+43.40 ℄ Pier 5

Sta. 1331+73.40 ℄ Pier 6

Sta. 1333+03.40 ℄ Pier 7

S.T. Sta. 1333+10.43 * End inside Shoulder Taper

T.S. Sta. 1333+27.79

Note:
℄ Brg. at all bents is perpendicular to Project Line at Sta. shown.

PLAN

1515'-5 7/8" Front Face Abut. 1 to ℄ Pier 13 East Bound Approach Structure (F-08-AL)

2'-8"

Span 1 104'-10"	Span 2 130'-0"	Span 3 130'-0"	Span 4 130'-0"	Span 5 130'-0"	Span 6 130'-0"	Span 7 130'-0"
Front Face Abut. 1 Back Face 3'-2½"	℄ Brg. Abut. 1	℄ Pier 2	℄ Pier 3	℄ Pier 4	℄ Pier 5	℄ Pier 6	℄ Pier 7
Abut. 1 Elev. 6043.42	Elev. 6043.92	Elev. 6044.02	Elev. 6048.49	Elev. 6054.50	Elev. 6060.52	Elev. 6066.48	Elev. 6071.95	Elev. 6077.41

81'-7 1/4"

MATCH LINE For Continuation See Drawing No. BAL-4

50 Year Flood Line Elev. 6026.8 (approx.)

Riprap

Existing Riprap

Finished Groundline

Compaction Grouting (typ.) where shown thus

30'-0"

Existing Groundline at Project Line

Existing Groundline at South Edge of Structure

Existing Groundline at North Edge of Structure

50 Year Flood Line Elev. 6041.4 (approx.)

SECTION

Taken at Project Line and Profile Grade Line (E.B. Mainline) Structure F-08-AL. All elevations shown at finished grade.

LEGEND

"F" Indicates fixed bearings.

"E" Indicates expansion bearings.

Note:
See Dwg. No. BAL-5 Riprap Placement Details.

Live Loading HS20-44 and Interstate Alternate

MEHEEN-WEIDLINGER ENGINEERS INC.

DIVISION OF HIGHWAYS

I 70 - SHOSHONE DAM

GENERAL LAYOUT

DESIGNER H.J. Meheen.	STRUCTURE NUMBERS	F-08-AL (E.B. MAINLINE)
DETAILER S. Perry		

DRAWING NUMBER BAL-3 OF 53 DRAWINGS

REVISION DATES (PRELIMINARY STAGE ONLY)

COLORADO
ARTMENT OF HIGHWAYS
OF HIGHWAYS:
FORM NO. 117:
1983:

AS CONSTRUCTED			
NO REVISIONS	7/20/92 REVISED		VOID

FED. ROAD REGION	DIVISION	PROJ. NO.	SHEET NO.	TOTAL SHEETS
VIII	COLO.	ID 70-2(143)	219	

REVISIONS		

INITIAL	DATE	CHECKED BY	R.A.O. 8-89
DESIGNED BY	H.J.M. 8-88		
DRAWN BY	D.G.H. 7-89	QUANTITIES BY	
CHECKED BY	S.K.P. 8-88	CHECKED BY	
DETAILED BY			

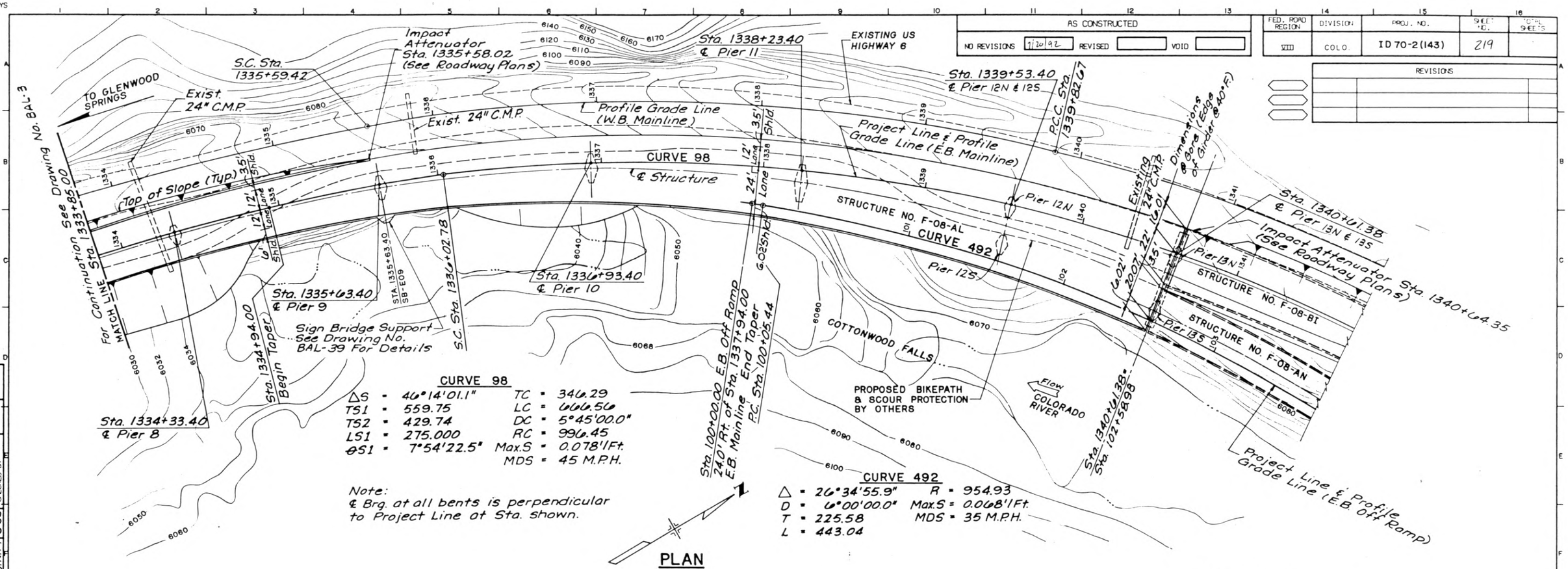

CURVE 98

△S	= 40°14'01.1"	TC	= 346.29
TS1	= 559.75	LC	= 666.56
TS2	= 429.74	DC	= 5°45'00.0"
LS1	= 275.000	RC	= 996.45
θS1	= 7°54'22.5"	Max.S	= 0.078'/Ft.
		MDS	= 45 M.P.H.

Note:
℄ Brg. at all bents is perpendicular to Project Line at Sta. shown.

CURVE 492

△	= 26°34'55.9"	R	= 954.93
D	= 6°00'00.0"	Max.S	= 0.068'/Ft.
T	= 225.58	MDS	= 35 M.P.H.
L	= 443.04		

PLAN

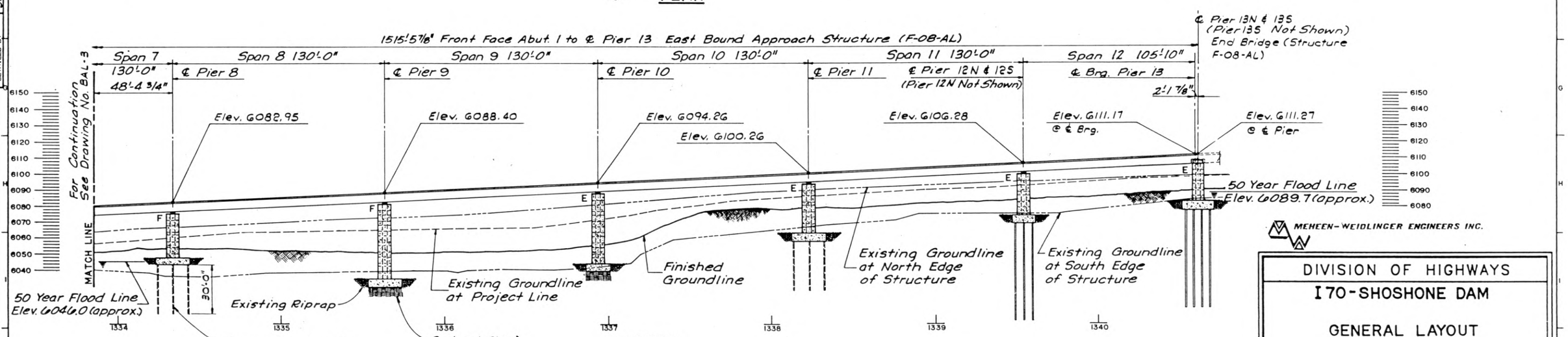

LEGEND

"F" Indicates fixed bearings

"E" Indicates expansion bearings

SECTION

Taken at Project Line and Profile Grade Line (E.B. Mainline) Structure F-08-AL. All elevations shown at finished grade.

Live Loading HS20-44 and Interstate Alternate

MEHEEN-WEIDLINGER ENGINEERS INC.

DIVISION OF HIGHWAYS

I 70-SHOSHONE DAM

GENERAL LAYOUT

DESIGNER H. J. Meheen	STRUCTURE NUMBERS	F-08-AL (E.B. MAINLINE)
DETAILER S. Perry		
DRAWING NUMBER BAL-4 OF 53 DRAWINGS		

REVISION DATES	(PRELIMINARY STAGE ONLY)

COLORADO
ARTMENT OF HIGHWAYS
OF HIGHWAYS:
FORM NO. 117:
1983:

AS CONSTRUCTED			
NO REVISIONS	7/20/92 REVISED		VOID

FED. ROAD REGION	DIVISION	PROJ. NO.	SHEET NO.	TOTAL SHEETS
VIII	COLO.	ID 70-2(143)	220	

REVISIONS		

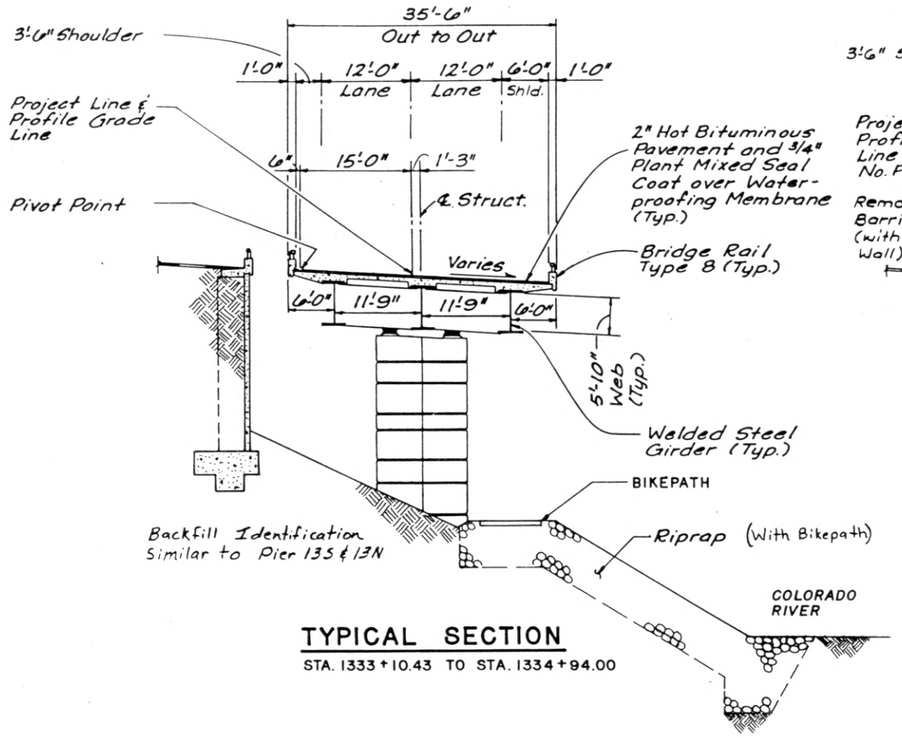

TYPICAL SECTION

STA. 1333+10.43 TO STA. 1334+94.00

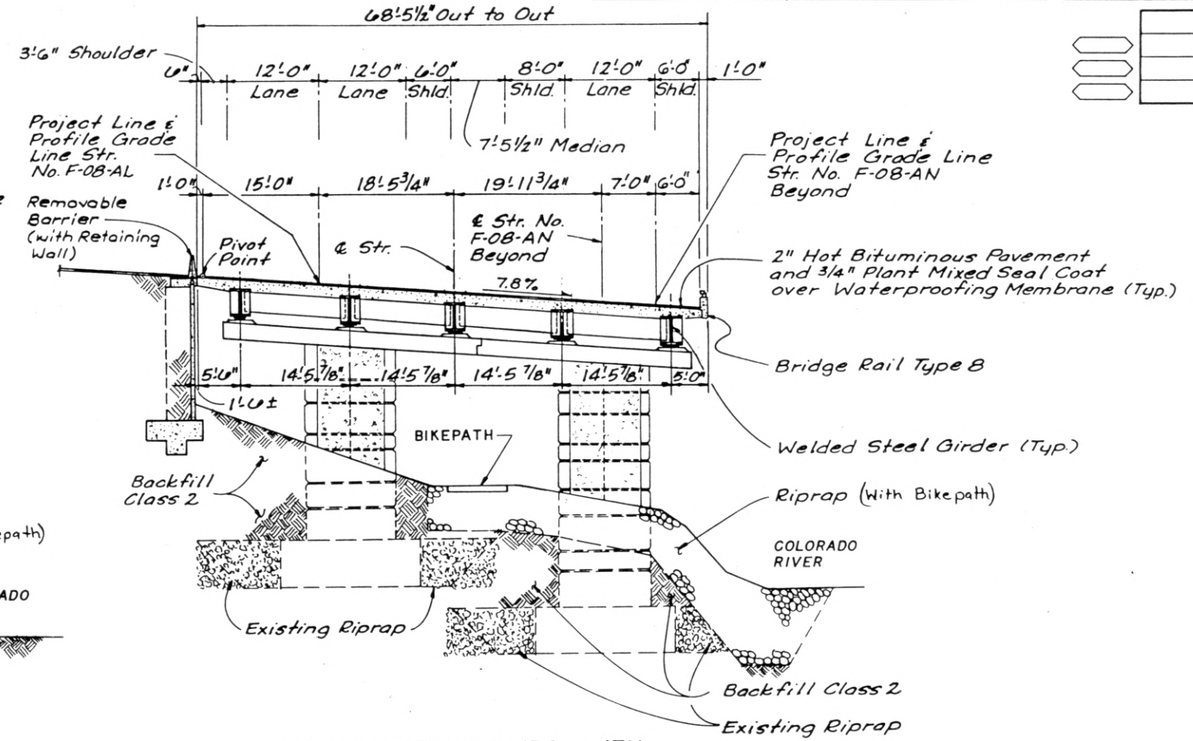

SECTION AT PIERS 13S & 13N

STA. 1340+59.23 (AT ℄ BEARING)

NOTE:
Profile Grade Line and Pivot Point are at top of 2" Hot Bituminous Pavement, NOT at top of 3/4" Plant Mixed Seal Coat.

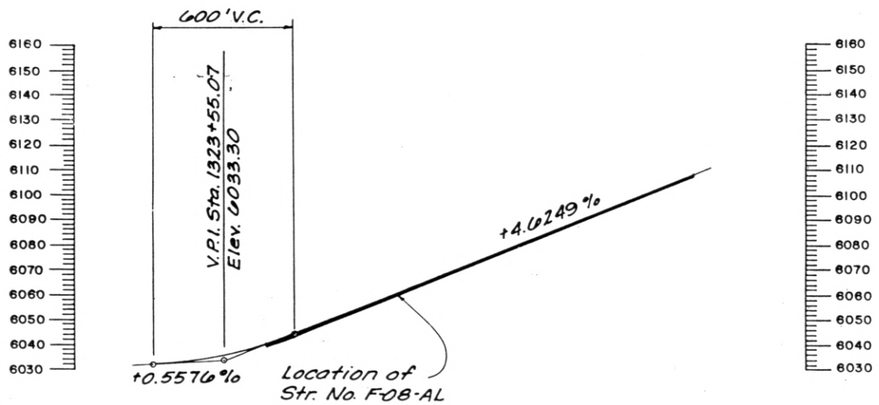

PROFILE GRADE

	INITIAL	DATE
DESIGNED BY	H.J.M.	4-88
CHECKED BY	C.G.H.	9-89
DETAILED BY	S.K.P.	9-88

	R.A.O.	3-89	
CHECKED BY	QUANTITIES BY	CHECKED BY	

Live Loading HS20-44 and Interstate Alternate.

MEHEEN-WEIDLINGER ENGINEERS INC.

DIVISION OF HIGHWAYS

I 70 - SHOSHONE DAM

GENERAL LAYOUT

RIPRAP AND BACKFILL DETAILS

DESIGNER H. J. Meheen	STRUCTURE NUMBERS	F-08-AL (E.B. MAINLINE)
DETAILER S. Perry		
DRAWING NUMBER BAL-5 OF 53 DRAWINGS		

REVISION DATES (PRELIMINARY STAGE ONLY)								

COLORADO
DEPARTMENT OF HIGHWAYS
DIVISION OF HIGHWAYS:
STANDARD FORM NO. 117:
1983:

AS CONSTRUCTED			
NO REVISIONS	7/20/92	REVISED	VOID

FED. ROAD REGION	DIVISION	PROJ. NO.	SHEET NO.	TOTAL SHEETS
VIII	COLO.	ID 70-2(143)	249	-

REVISIONS		

	INITIAL	DATE
DESIGNED BY	A.V.M.	2-89
CHECKED BY	O.G.H.	9-89
DETAILED BY	S.K.P.	2-89

R.A.Q.	7-89	
CHECKED BY		
QUANTITIES BY		
CHECKED BY		

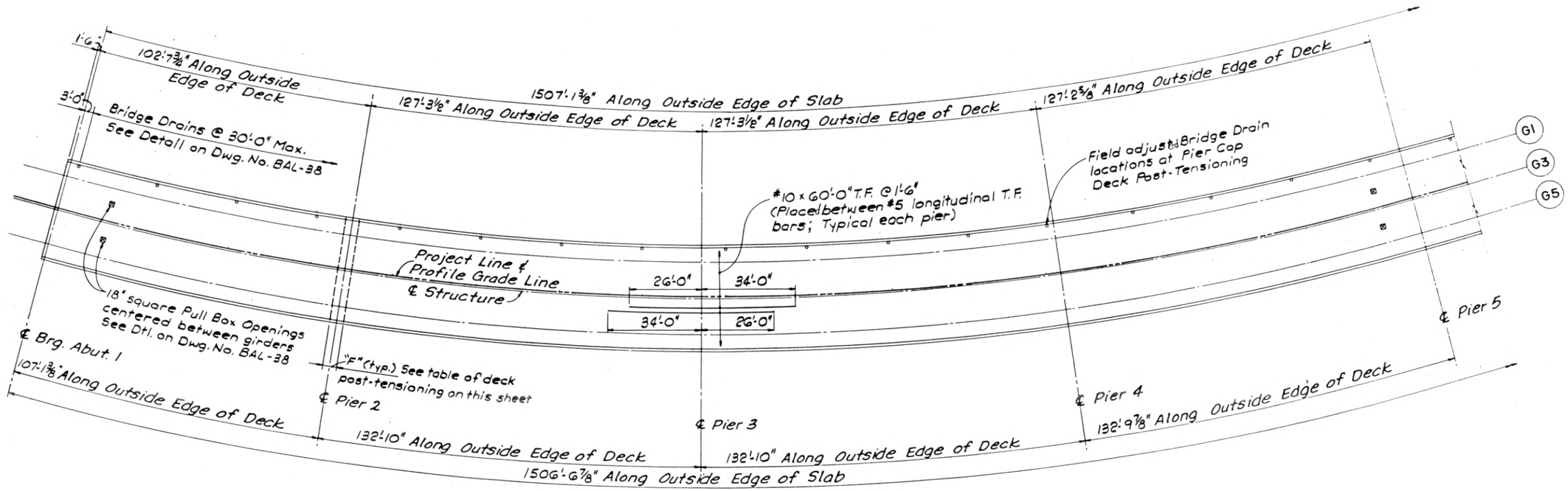

DECK PLAN

TABLE OF DECK REINFORCING				
BETWEEN	NO. OF "d" BARS SIZE	NO. REQ'D.	SPA.	"t" BARS
Abut. 1 & Pier 9	#5	22	6"	#6@5½"
Pier 9 & Pier 10	#5	9	9"	#6@9"
Pier 10 & Pier 11	#5	12	8"	#6@7½"
Pier 11 & Pier 12	#5	19	6"	#6@6"
Pier 12 & Pier 13	#5	29	5"	#6@5"

TABLE OF DECK POST-TENSIONING			
AT	"F" WIDTH TO BE POST-TENSIONED	Pjack.	SEE DWG. NO.
Pier 2 thru 8	6'-0"	495k	BAL-29
Pier 9	6'-0"	735k	BAL-29
Pier 10	6'-0"	870k	BAL-29
Pier 11	6'-0"	1020k	BAL-29
Pier 12	6'-0"	620k	BAL-29

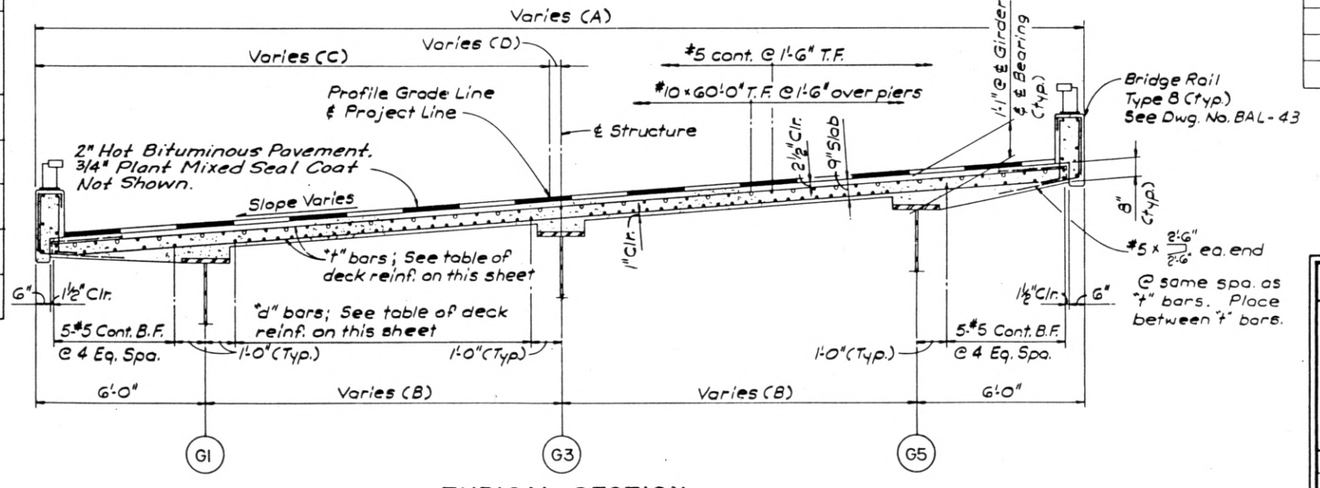

TYPICAL SECTION

DIMENSION / LOCATION	A	B	C	D
Abut. 1	37'-2½"	12'-7⅛"	18'-2½"	0'-4¾"
Pier 2	37'-2½"	12'-7⅛"	18'-2½"	0'-4¾"
Pier 3	37'-2½"	12'-7⅛"	18'-2½"	0'-4¾"
Pier 4	37'-2½"	12'-7⅛"	18'-2½"	0'-4¾"
Pier 5	37'-1½"	12'-6¾"	18'-1½"	0'-5⅛"

MEHEEN-WEIDLINGER ENGINEERS INC.

DIVISION OF HIGHWAYS

I70 - SHOSHONE DAM
DECK PLAN
AND
TYPICAL SECTION

DESIGNER V. Murthy	STRUCTURE NUMBERS	F-08-AL (E.B. MAINLINE)
DETAILER S. Perry		
DRAWING NUMBER BAL-34 OF 53 DRAWINGS		

REVISION DATES (PRELIMINARY STAGE ONLY)

COLORADO
PARTMENT OF HIGHWAYS
OF HIGHWAYS:
FORM NO. 117:
1983:

AS CONSTRUCTED					
NO REVISIONS	7/20/92	REVISED		VOID	

FED. ROAD REGION	DIVISION	PROJ. NO.	SHEET NO.	TOTAL SHEETS
VIII	COLO.	ID 70-2(143)	250	

REVISIONS		

	INITIAL	DATE
DESIGNED BY	A.V.M.	2-89
CHECKED BY	D.G.H.	2-89
DETAILED BY	S.K.P.	2-89

R.A.O. 7-89

CHECKED BY
QUANTITIES BY
CHECKED BY

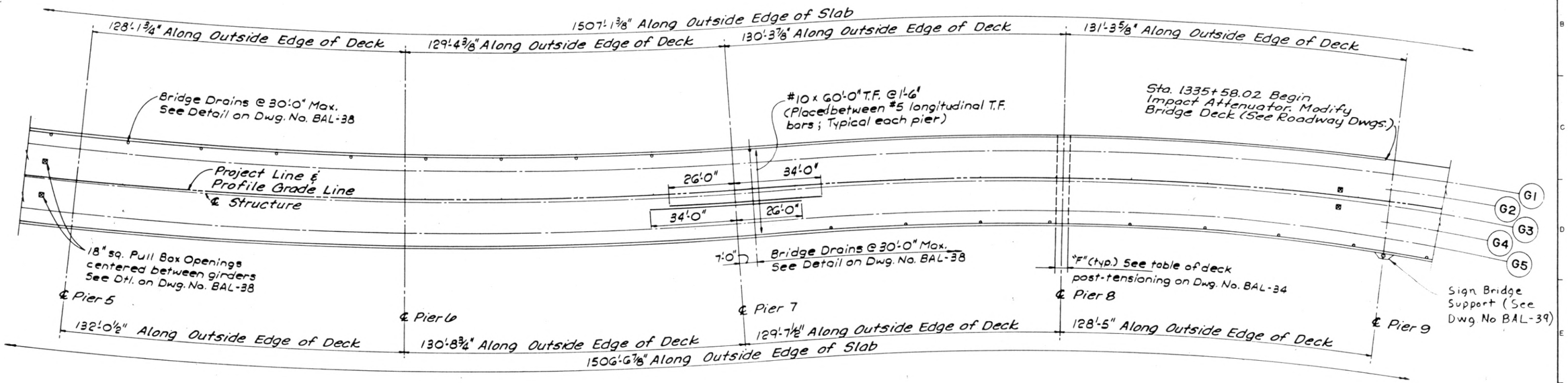

DECK PLAN

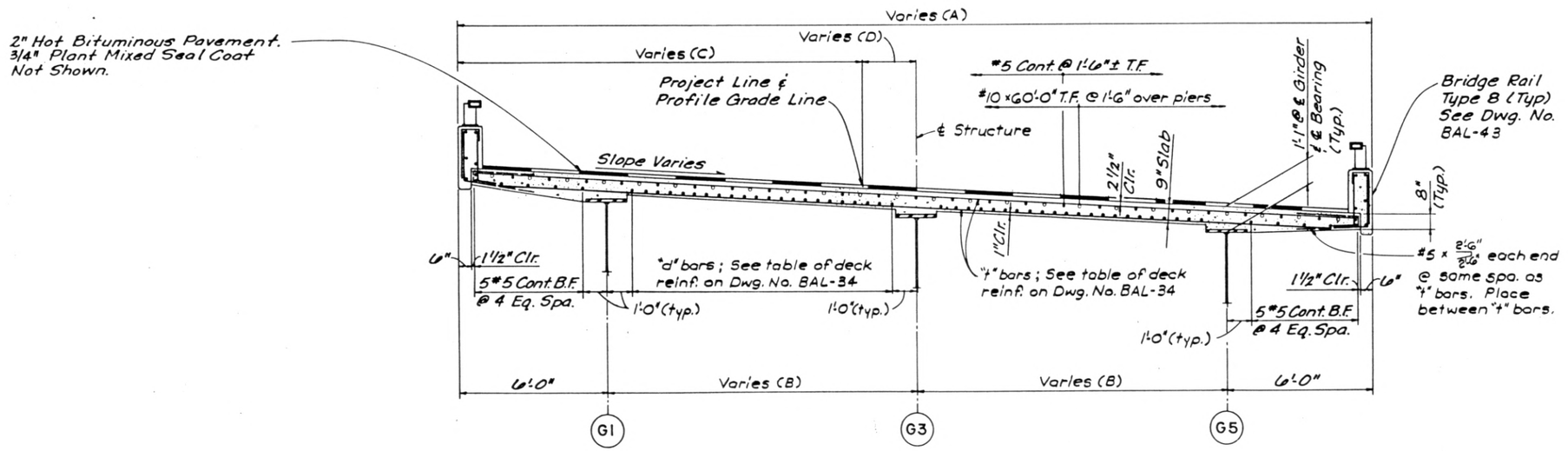

TYPICAL SECTION

DIMENSION / LOCATION	A	B	C	D
Pier 5	37'-1 1/2"	12'-6 3/4"	18'-1 1/2"	5 1/8"
Pier 6	36'-4"	12'-2"	17'-4"	10"
Pier 7	35'-6 1/2"	11'-9 1/4"	16'-6 1/2"	1'-2 3/4"
Pier 8	35'-6"	11'-9"	16'-6"	1'-3"

MEHEEN-WEIDLINGER ENGINEERS INC.

DIVISION OF HIGHWAYS

I70 - SHOSHONE DAM

DECK PLAN AND TYPICAL SECTION

DESIGNER V. Murthy	STRUCTURE NUMBERS	F-08-AL(E.B. MAINLINE)
DETAILER S. Perry		
DRAWING NUMBER BAL-35 OF 53 DRAWINGS		

REVISION DATES								(PRELIMINARY STAGE ONLY)

COLORADO
DEPARTMENT OF HIGHWAYS
DIVISION OF HIGHWAYS
FORM NO. 117
1983

AS CONSTRUCTED					
NO REVISIONS	7/20/92	REVISED		VOID	

FED. ROAD REGION	DIVISION	PROJ. NO.	SHEET NO.	TOTAL SHEETS
VIII	COLO.	ID 70-2(143)	251	

REVISIONS		

	INITIAL	DATE	
DESIGNED BY	A.V.M.	2-89	R.A.O. 7-89
CHECKED BY	D.G.H.	9-89	CHECKED BY
DETAILED BY	S.K.P.	12-89	QUANTITIES BY
			CHECKED BY

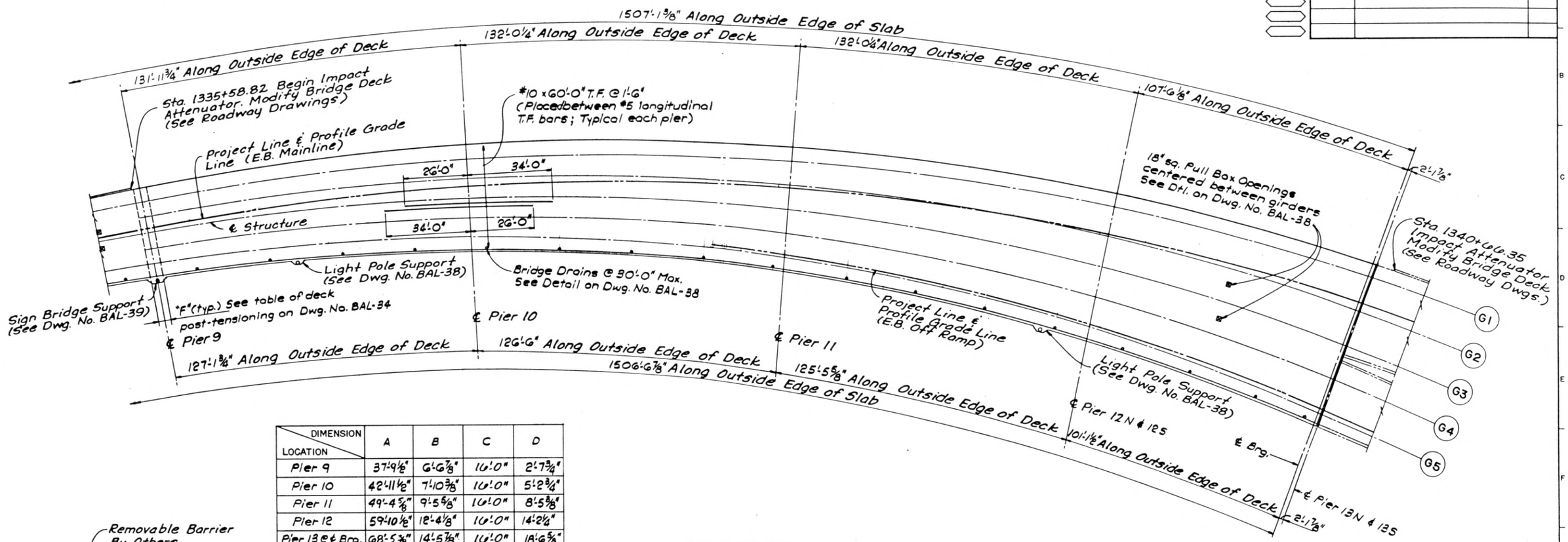

DIMENSION / LOCATION	A	B	C	D
Pier 9	37'-9 1/8"	6'-6 7/8"	16'-0"	2'-7 3/4"
Pier 10	42'-11 1/2"	7'-10 3/8"	16'-0"	5'-2 3/4"
Pier 11	49'-4 5/8"	9'-5 5/8"	16'-0"	8'-5 3/8"
Pier 12	59'-10 1/2"	12'-4 1/8"	16'-0"	14'-2 1/4"
Pier 13 ℄ Brg.	68'-5 3/8"	14'-5 7/8"	16'-0"	18'-6 5/8"

DECK PLAN

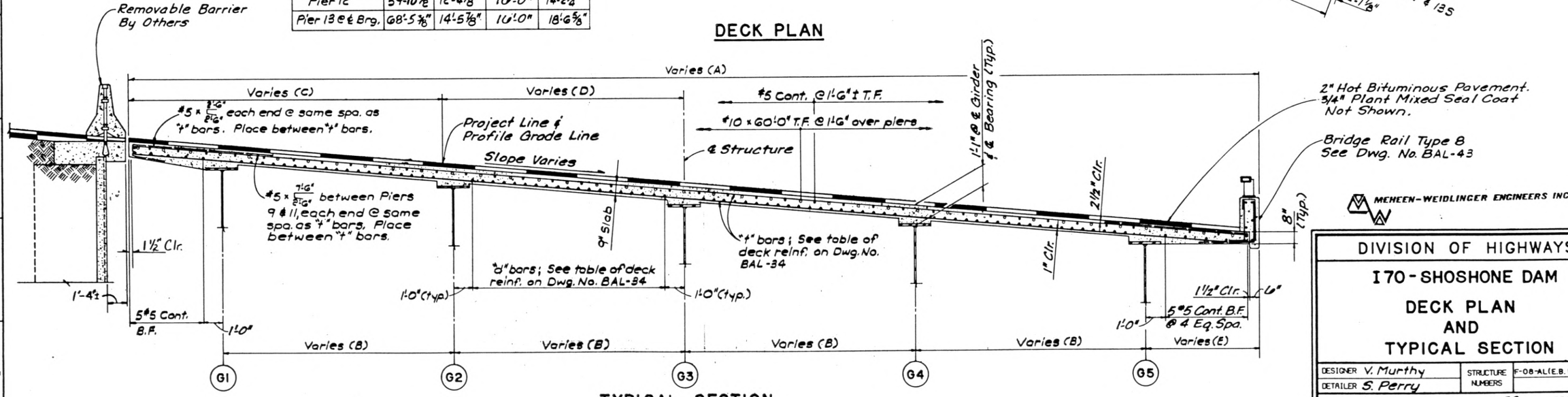

TYPICAL SECTION

MEHEEN-WEIDLINGER ENGINEERS INC.

DIVISION OF HIGHWAYS

I70 - SHOSHONE DAM

DECK PLAN AND TYPICAL SECTION

DESIGNER V. Murthy	STRUCTURE NUMBERS	F-08-AL (E.B. MAINLINE)
DETAILER S. Perry		
DRAWING NUMBER BAL-36 OF 53 DRAWINGS		

REVISION DATES (PRELIMINARY STAGE ONLY)

STATE OF COLORADO
STATE DEPARTMENT OF HIGHWAYS
DIVISION OF HIGHWAYS
D. O. H. FORM NO. 117
REV. APR. 1966

AS CONSTRUCTED			
NO REVISIONS		REVISED 7/20/92	VOID

FEDERAL ROAD REGION NO.	DIVISION	PROJECT NUMBER	SHEET NUMBER
VIII	COLORADO	ID 70-2 (143)	252

REVISIONS		

	INITIAL	DATE
Designed By	A.W.M.	7-89
Checked By	A.A.O.	7-89
Detailed By	D.G.H.	9-89
Checked By	K.C.P.	7-89
Quantities By		
Checked By		

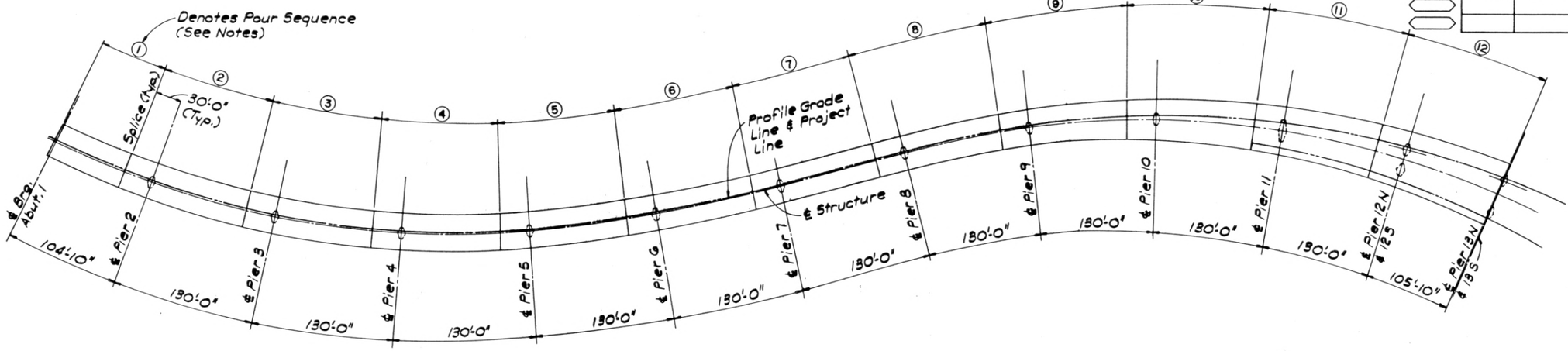

DECK PLACING SEQUENCE

1. The Deck Slab Concrete ~~shall be~~ was placed by the Continuous Span-by-Span method. The next pour (s) ~~can be~~ was placed only when the concrete in the previously placed pour ~~has~~ was obtained a Minimum Strength of 4000 psi.
2. Pours may be combined in a sequential order at the Contractor's option.
   Example: Pour 2 may be combined with Pour 1.
3. No Deck Slab Concrete ~~shall be~~ was placed until Structural Steel Erection has been completed, for at least 2 spans ahead.
4. Placed transverse deck reinforcement radially (on curved alignment).
5. All Deck Concrete ~~shall be~~ was Class D (Bridge)
6. Dimensions are along Profile Grade Line.
7. For Slab at Abutment 1 see Dwg. No. BAL-19.

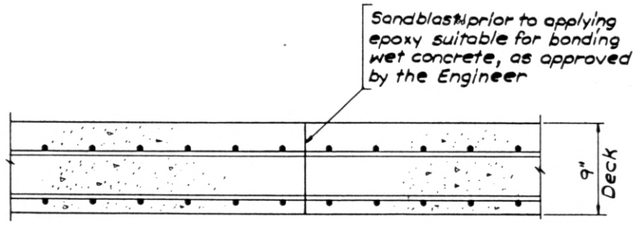

CONSTRUCTION JOINT DETAIL

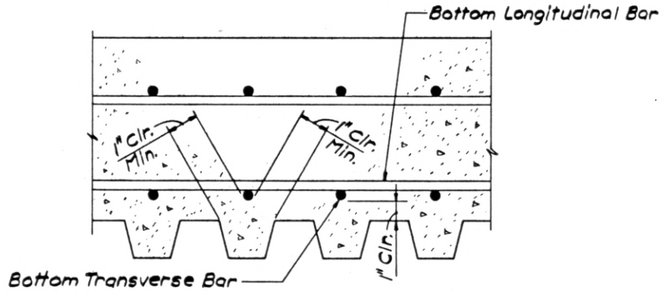

STAY-IN-PLACE DECK FORM DETAIL

Note:
Deck ~~may be~~ was formed using permanent bridge deck forms. Contractor ~~must~~ provide design calculations and support details to the Engineer prior to construction. Stay-in-Place forms ~~shall~~ were not be used in deck overhang area. Welding of Stay-in-Place deck forms to top flange of girders ~~shall~~ was not be permitted.

MEHEEN-WEIDLINGER ENGINEERS INC.

DIVISION OF HIGHWAYS

I 70 - SHOSHONE DAM

DECK PLAN
PLACING SEQUENCE
AND SECTIONS

Designer R. Oddo	Structure Numbers	F-08-AL (E.B. MAINLINE)
Detailer K. Pistorius		
Drawing Number BAL-37 of 53 Drawings		

Revision Dates	(Preliminary Stage Only)

STATE OF COLORADO
STATE DEPARTMENT OF HIGHWAYS
DIVISION OF HIGHWAYS
D. O. H. FORM NO. 117
REV APR 1986

AS CONSTRUCTED					
NO REVISIONS		REVISED 7 80 92	VOID		

FEDERAL ROAD REGION NO.	DIVISION	PROJECT NUMBER	SHEET NUMBER
VIII	COLORADO	ID 70-2(143)	253

REVISIONS		

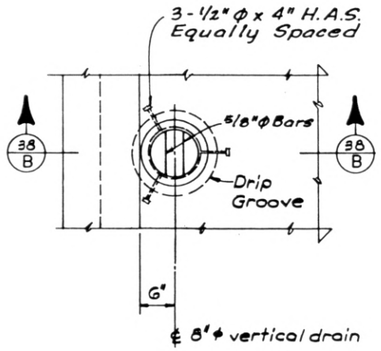

PLAN

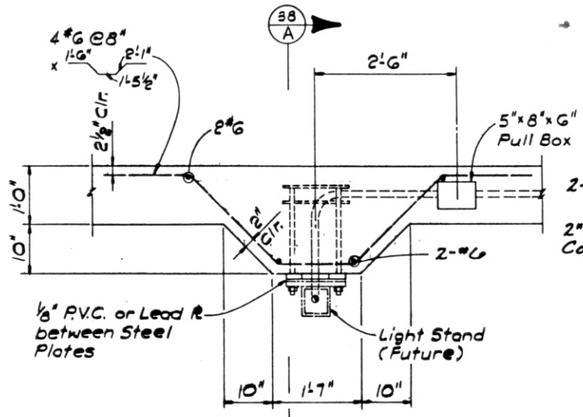

PLAN

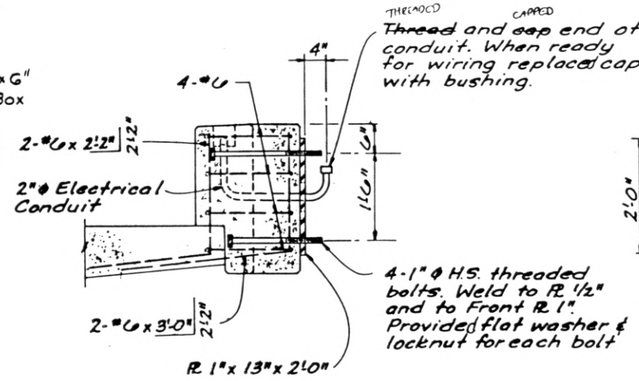

SECTION (38/A)

LIGHT POLE SUPPORT

LOCATION:

STA. 1336+20
STA. 101+32 (OFF RAMP)

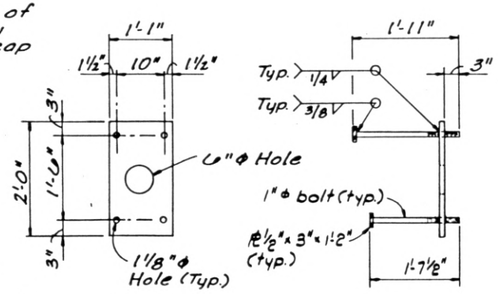

ANCHOR PLATE DETAIL

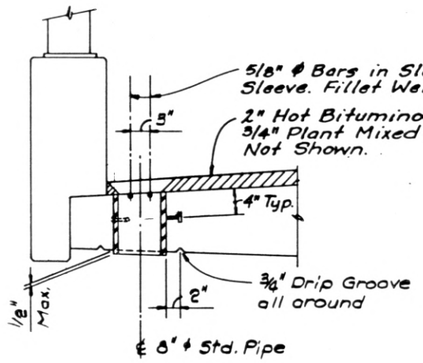

SECTION (38/B)

BRIDGE DRAIN

Note:
Deck Drain assembly ~~shall be~~ galvanized after fabrication. Move or ~~Bend~~ Bend deck reinforcing to clear bridge drain.

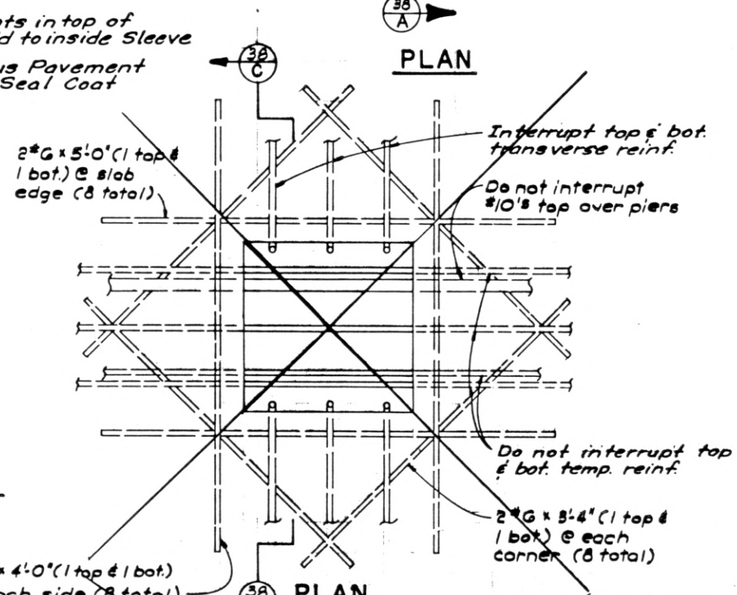

SECTION (38/C)

PULL BOX OPENING

	INITIAL	DATE
Designed By	AVM	3-99
Checked By	DBH	4-99
Detailed By	KCP	3-99
Checked By		
Quantities By		
Checked By		
R.A.G.		7-99

MEHEEN-WEIDLINGER ENGINEERS INC.

DIVISION OF HIGHWAYS

I 70 - SHOSHONE DAM

MISCELLANEOUS SUPERSTRUCTURE DETAILS

Designer V. Murthy	Structure Numbers	F-08-AL(E.B. MAINLINE)
Detailer K. Pistorius		
Drawing Number BAL-38 of 53		Drawings

Revision Dates							(Preliminary Stage Only)

STATE OF COLORADO
STATE DEPARTMENT OF HIGHWAYS
DIVISION OF HIGHWAYS
D. O. H. FORM NO. 117
REV. APR. 1986

AS CONSTRUCTED			
NO REVISIONS		REVISED 7/20/92	VOID

FEDERAL ROAD REGION NO.	DIVISION	PROJECT NUMBER	SHEET NUMBER
VIII	COLORADO	ID 70-2 (143)	254

REVISIONS

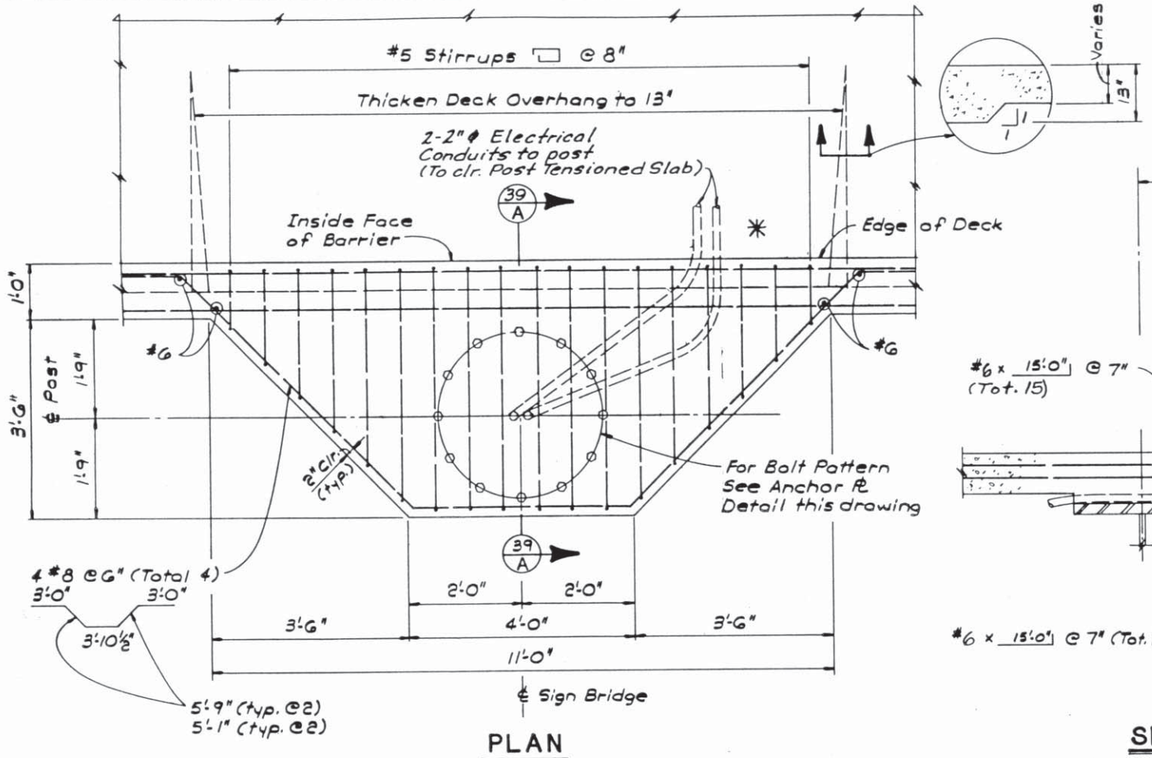

PLAN

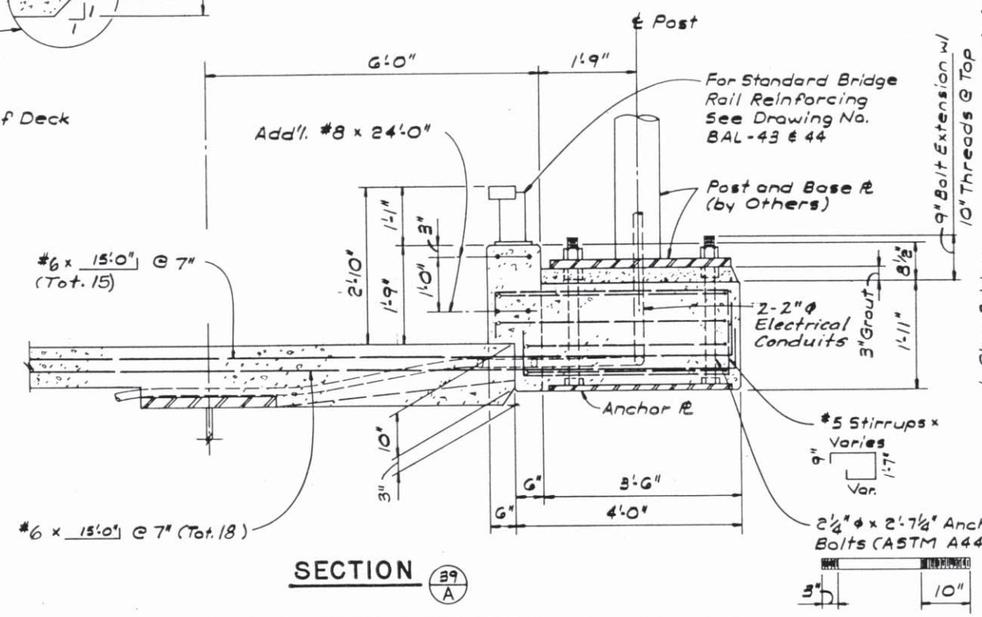

SECTION 39/A

SIGN BRIDGE SUPPORT (CANTILEVER TYPE)

LOCATION:
STA. 1335+63.40 (at Pier 9)

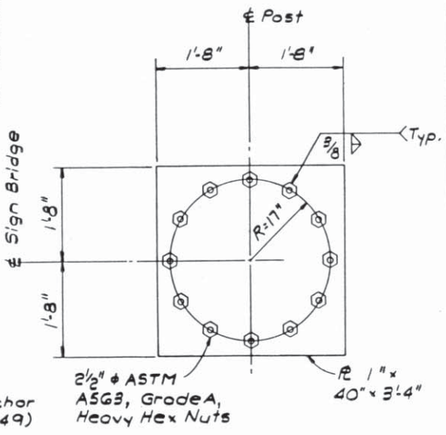

Note:
Galvanize Entire Anchor PL & Bolt Assembly after fabrication.

ANCHOR PLATE DETAIL

DESIGN LOADS:

M_L = Longitudinal Moment = 177 Kip Ft.
M_T = Transverse Moment = 136 Kip Ft.
T = Torsional Reaction = 122.5 Kip Ft.
V = Vertical Reaction = 7 Kips

NOTES:

1. Loads are from Parsons Brinkerhoff.
2. Post & Base PL sizes from Parson Brinkerhoff.

Notes:

1. Anchor plates, bolts and nuts ~~shall~~ were not ~~be~~ paid for seperately, but ~~shall be~~ was included in cost of item 601, Concrete Class D (Bridge)
2. * To pour Barrier & Support Together.

	INITIAL	DATE	
Designed By	A.V.M.	11-89	Checked By
Checked By	D.G.H.	11-89	Quantities By
Detailed By	K.C.P.	11-89	Checked By

MEHEEN-WEIDLINGER ENGINEERS INC.

DIVISION OF HIGHWAYS

I 70 SHOSHONE DAM

MISCELLANEOUS SUPERSTRUCTURE DETAILS

Designer V. Murthy	Structure Numbers	F-08-AL (E.B. MAINLINE)
Detailer K. Pistorius		
Drawing Number BAL-39 of 53		Drawings

Revision Dates (Preliminary Stage Only)

STATE OF COLORADO
STATE DEPARTMENT OF HIGHWAYS
DIVISION OF HIGHWAYS
D. O. H. FORM NO. 117
REV. APR. 1966

AS CONSTRUCTED			
NO REVISIONS		REVISED 7/10/92	VOID

FEDERAL ROAD REGION NO.	DIVISION	PROJECT NUMBER	SHEET NUMBER
VIII	COLORADO	ID 70-2(143)	255

REVISIONS		

	INITIAL	DATE
Designed By	RAO	7-89
Checked By	DGW	9-89
Detailed By	KCB	7-89
Checked By	AVM	7-89
Quantities By		
Checked By		

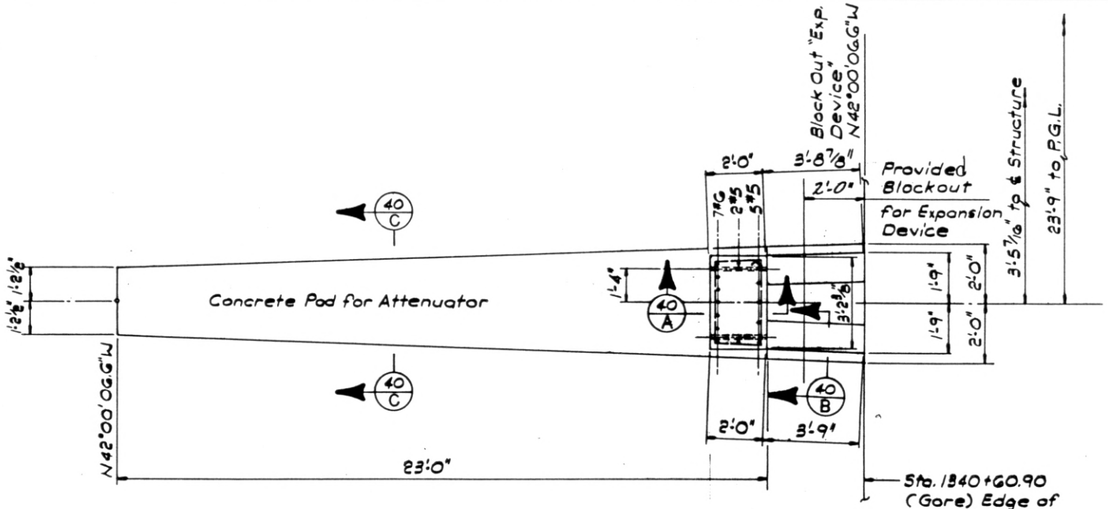

PLAN

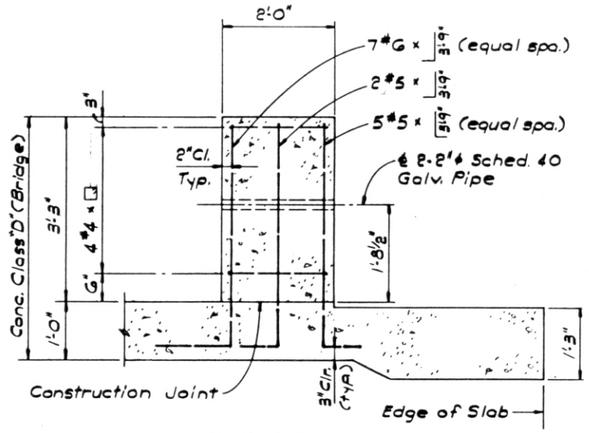

SECTION (40 A)

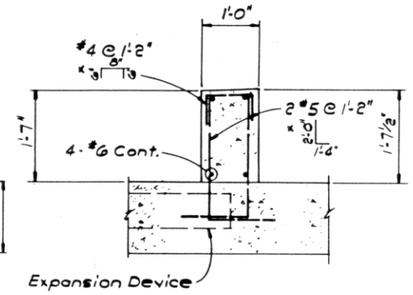

SECTION (40 B)

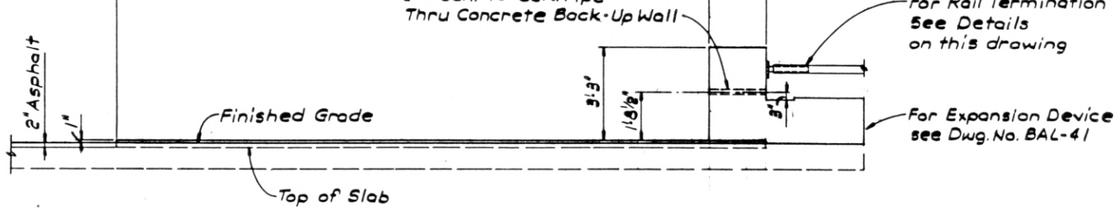

ELEVATION

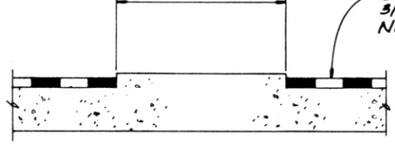

SECTION (40 C)

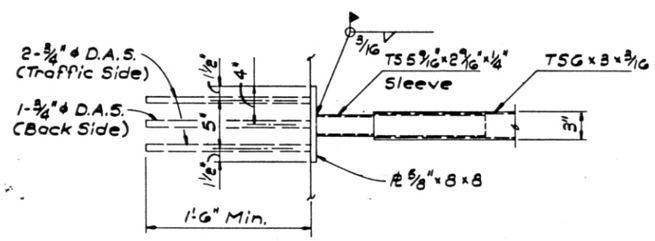

ELEVATION

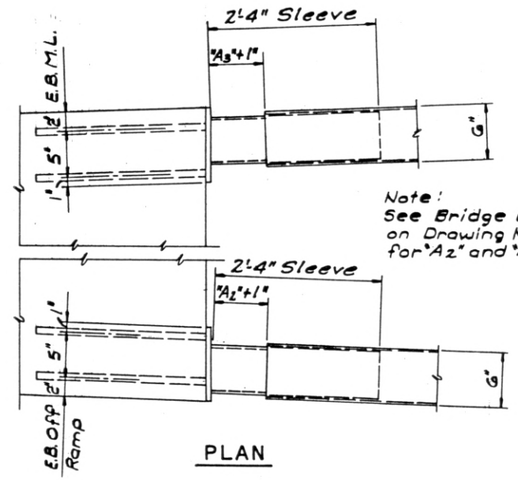

Note:
See Bridge Expansion Device on Drawing No. BAL-41 for "A2" and "A3" dimensions.

PLAN

DETAILS OF RAIL TERMINATION AT GORE AREA

MEHEEN-WEIDLINGER ENGINEERS INC.

DIVISION OF HIGHWAYS

I 70 - SHOSHONE DAM

ATTENUATOR SUPPORT DETAILS

Designer R. Oddo	Structure Numbers	F-08-AL (E.B. MAINLINE)
Detailer K. Pistorius		
Drawing Number BAL-40 of 53		Drawings

Revision Dates (Preliminary Stage Only)

STATE OF COLORADO
STATE DEPARTMENT OF HIGHWAYS
DIVISION OF HIGHWAYS
D. O. H. FORM NO. 117
REV. APR. 1986

AS CONSTRUCTED			
NO REVISIONS		REVISED 7/20/92	VOID

FEDERAL ROAD REGION NO.	DIVISION	PROJECT NUMBER	SHEET NUMBER
VIII	COLORADO	ID 70-2 (143)	256

REVISIONS			
R-2	3-19-90	Revised "A3" Dim.	SKP

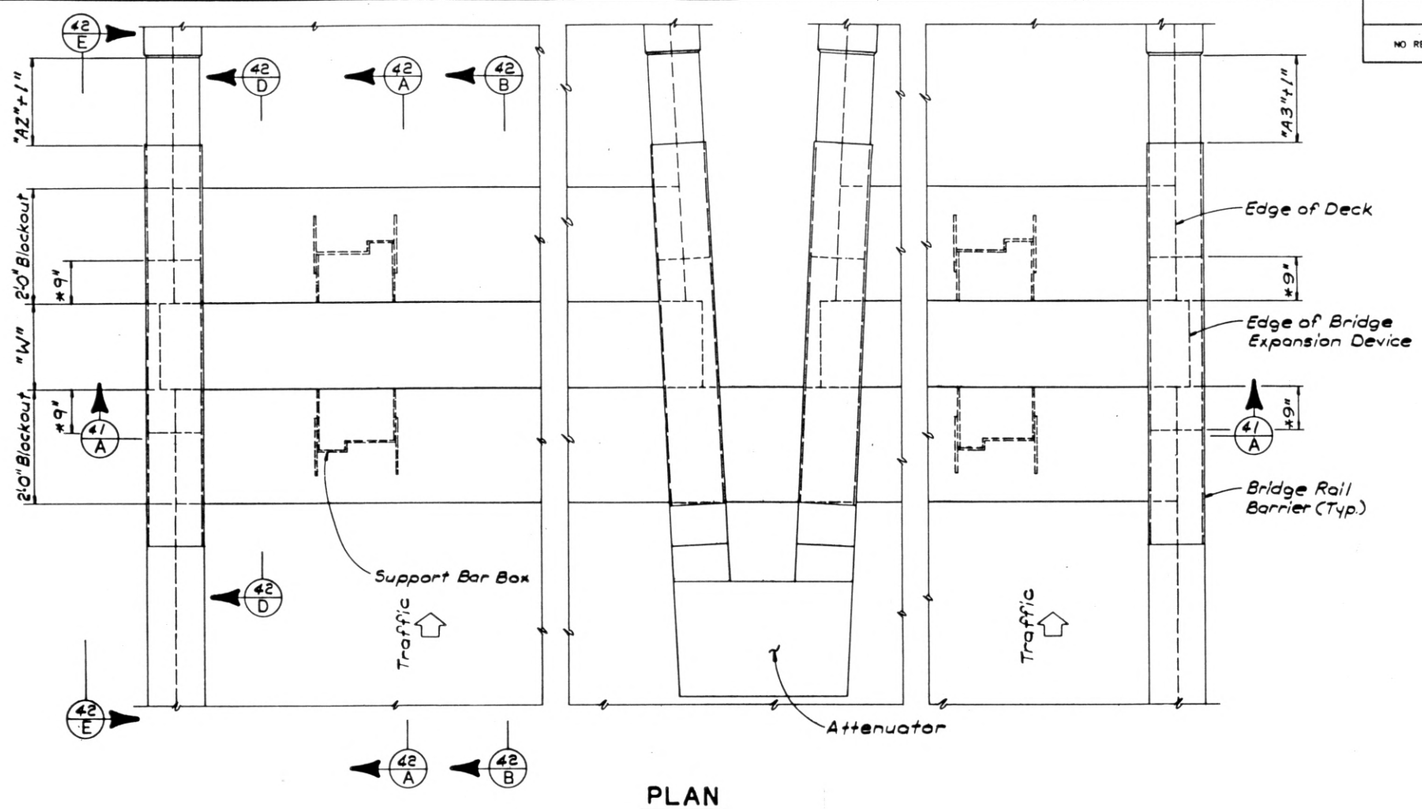

PLAN

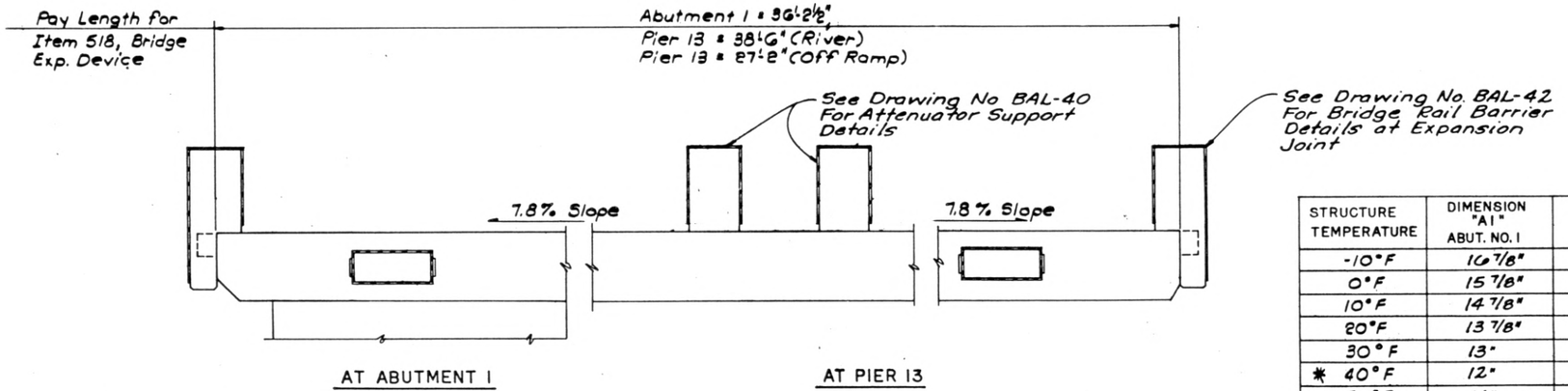

SECTION 41/A

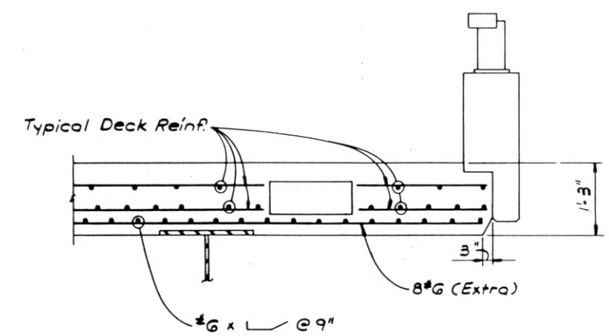

SECTION 42/B

NOTES:

1. Location and size of support bars, anchor assembly and anchor angles ~~shall be~~ per manufacturers drawings.
2. The expansion device ~~shall be~~ was installed parallel to the slope and grade of the deck.
3. Steel Plates: ASTM A588
4. Barrier rail plates ~~shall~~ received one shop coat of paint plus two field coats of approved paint that matches the concrete barrier. Barrier Rail Plates shall not be paid for separately, but shall be included in Bid Item No. 518 (Bridge Expansion Device).
5. Before finishing the concrete pour for the concrete barrier leave a blockout for the expansion joint device. After the expansion joint device is installed, pour blockout and concrete barrier.
6. The expansion device manufacturer is responsible for the support of the device during the construction phase. Shop Drawings shall show support method.
7. "W" Dimensions are dependent upon the particular Device supplied, and shall be shown on the Shop Drawings.
8. *9" Dimension @ Pier 13 Attenuator Rails Does Not Apply.

STRUCTURE TEMPERATURE	DIMENSION "A1" ABUT. NO. 1	DIMENSION "A2" RIVER	DIMENSION "A3" OFF RAMP
-10°F	16 7/8"	16 1/8"	16 1/2"
0°F	15 7/8"	15 1/4"	15 1/2"
10°F	14 7/8"	14 3/8"	14 1/2"
20°F	13 7/8"	13 5/8"	13 1/2"
30°F	13"	12 1/2"	12 1/2"
* 40°F	12"	11 1/2"	11 1/2"
50°F	11"	10 5/8"	10 1/2"
60°F	10"	9 3/4"	9 1/2"
70°F	9 1/8"	8 7/8"	8 1/2"
80°F	8 1/8"	8"	7 1/2"
90°F	7 1/8"	7"	6 1/2"
100°F	6 1/8"	6"	5 1/2"

* Assumed Standard Temperature

R-2

MEHEEN-WEIDLINGER ENGINEERS INC.

DIVISION OF HIGHWAYS

I 70 - SHOSHONE DAM
BRIDGE EXPANSION DEVICE

Designer R. Oddo	Structure Numbers	F-08-AL(E.B.MAINLINE)	
Detailer K. Pistorius			
Drawing Number BAL-41 of 53		Drawings	

	INITIAL	DATE		
Designed By	R.A.O.	1-89	Checked By	A.V.M. 3-89
Checked By	D.G.H.	9-89	Quantities By	
Detailed By	K.C.P.	1-89	Checked By	

Revision Dates (Preliminary Stage Only)

STATE OF COLORADO
STATE DEPARTMENT OF HIGHWAYS
DIVISION OF HIGHWAYS
D. O. H. FORM NO. 117
REV. APR. 1968

AS CONSTRUCTED					
NO REVISIONS		REVISED	7/20/92	VOID	

FEDERAL ROAD REGION NO.	DIVISION	PROJECT NUMBER	SHEET NUMBER
VIII	COLORADO	ID 70-2(143)	257

REVISIONS		

	INITIAL	DATE
Designed By	R.A.O.	1-89
Checked By	D.G.H.	7-89
Detailed By	K.C.P.	1-89
Checked By		
Quantities By		
Checked By	A.V.M.	3-89

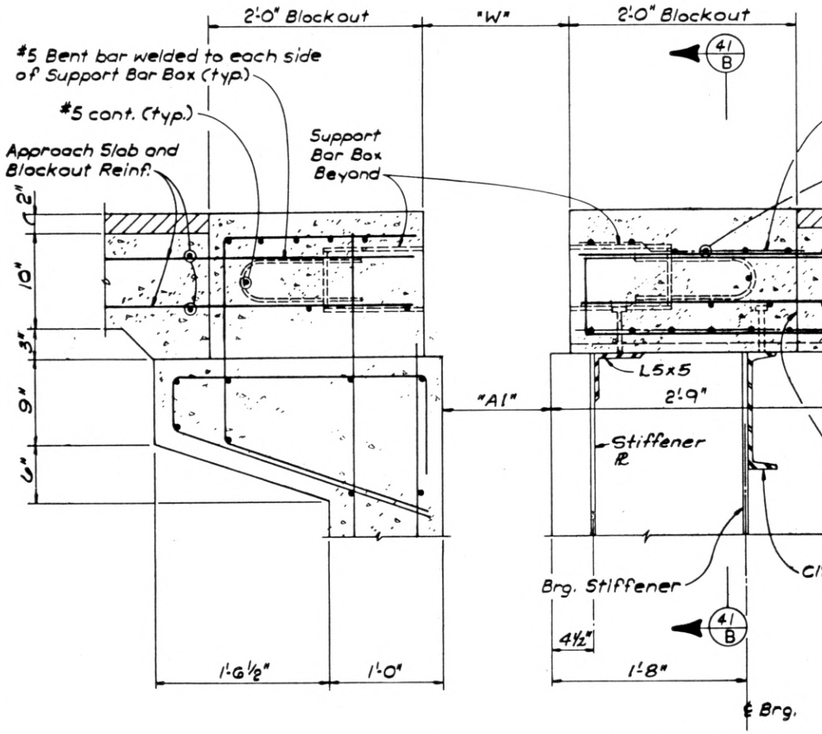

SECTION AT ABUTMENT 1 (41/A)

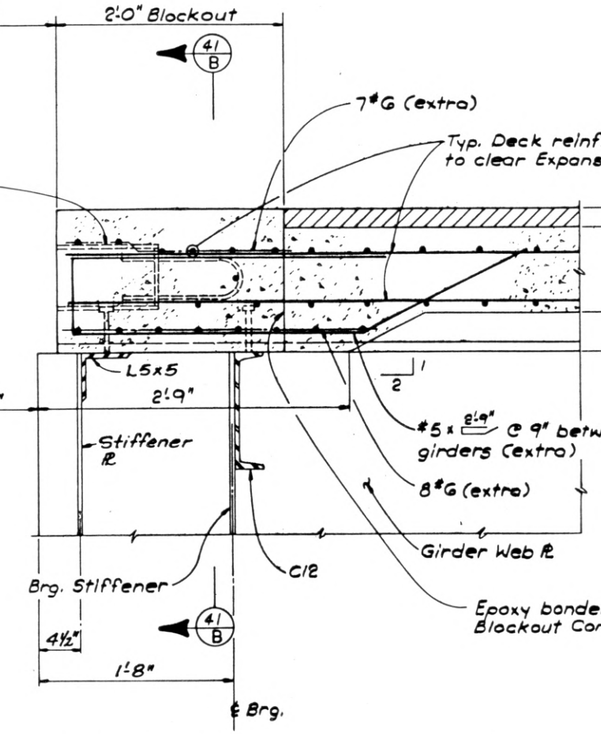

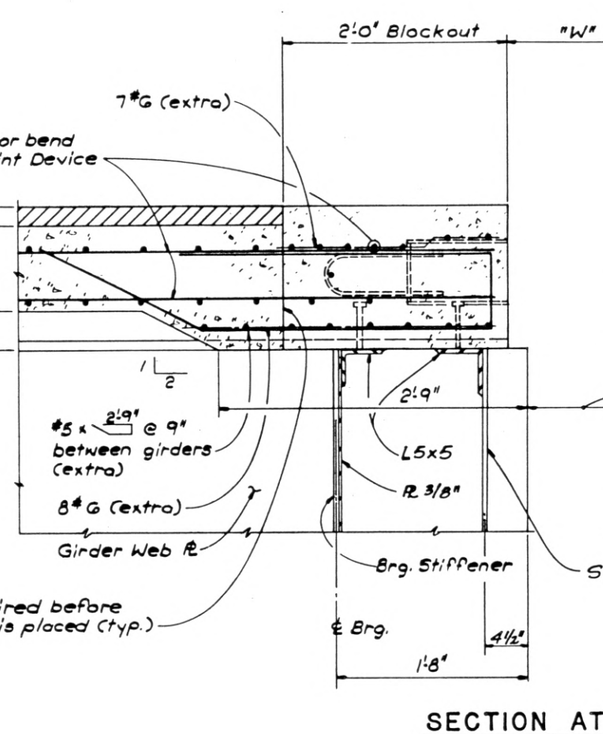

SECTION AT PIER 13 (41/B)

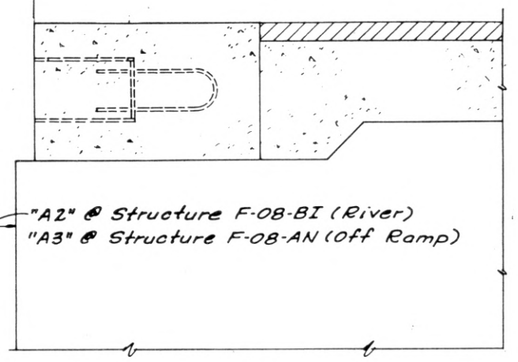

NOTE:

For Blockout Dimensions and Reinforcing on Structures F-08-BI and F-08-AN, see Expansion Device Details on BBI-29 and BAN-19 Respectively.

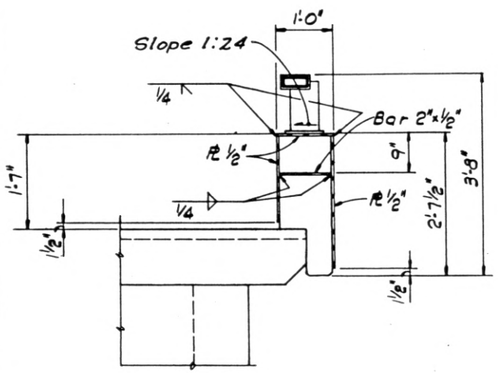

SECTION (42/C)

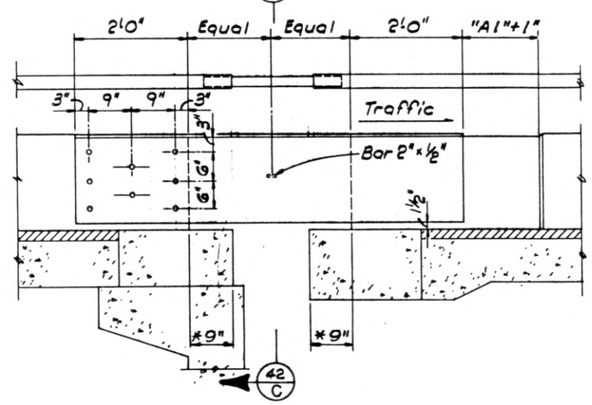

SECTION (41/D)

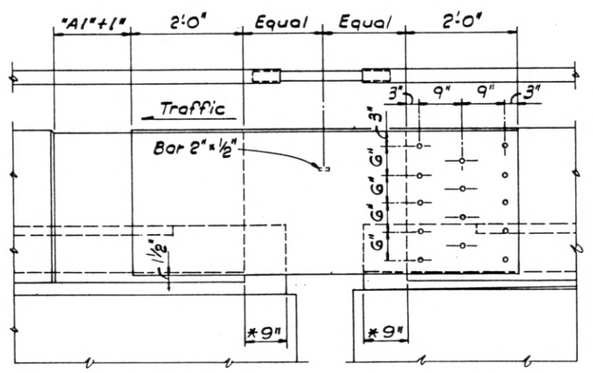

SECTION (41/E)

BRIDGE RAIL BARRIER DETAILS

Abutment 1 shown, Rail Barrier at Pier 13 Similar

Notes for Bridge Rail Barrier

1. *See Table on Dwg. BAL-41 for A dimensions.*
2. *All screws ~~shall be~~ were ½"ϕ countersunk flathead cap screws w/ ½"ϕ threaded concrete inserts.*
3. ** The 9" Dimension does not apply at Pier No. 13 Attenuator rails (See Dwg. No. BAL-41).*

MEHEEN-WEIDLINGER ENGINEERS INC.

DIVISION OF HIGHWAYS

I 70 - SHOSHONE DAM
BRIDGE EXPANSION DEVICE

Designer R. Oddo	Structure Numbers	F-08-AL (E.B. MAINLINE)
Detailer K. Pistorius		
Drawing Number BAL-42 of 53		Drawings

Revision Dates (Preliminary Stage Only)

STATE OF COLORADO
STATE DEPARTMENT OF HIGHWAYS
DIVISION OF HIGHWAYS
D. H. FORM NO. 117
APR. 1986

AS CONSTRUCTED					
NO REVISIONS		REVISED	7/20/92	VOID	

FEDERAL ROAD REGION NO.	DIVISION	PROJECT NUMBER	SHEET NUMBER
VIII	COLORADO	ID 70-2(143)	258

REVISIONS

SHEET 1 OF 2

BASE PLATE DETAIL

PARAPET DETAIL

ELEVATION

SIDE VIEW

POST DETAIL

NOTES

Tubing ~~shall be~~ WAS shop bent or fabricated to fit horizontal curves of less than 2,400 foot radius.

Tube ~~shall be~~ WAS continuous over not less than three (3) posts, but over four (4) posts is preferred, and terminal end is considered a post.

Tubing ~~shall be~~ WAS manufactured in accordance with the requirements of ASTM A847.

All structural steel ~~shall be~~ WAS weathering steel, AASHTO M-222(ASTM A588).

See roadway plans for location of terminal sections.

All reinforcing steel ~~shall be~~ WAS epoxy coated.

All concrete ~~shall be~~ WAS class D (Bridge).

D.A.S.=Deformed Anchor Stud, minimum grade 60 material, automatically end welded.

Steel parts of bridge rail ~~shall be~~ WERE as shown on roadway plans, which shall govern.

Steel quantities for bridge rail are not included in bridge quantities.

For delineators, see roadway details.

See dwg. BAL-41 & 42 for details of Bridge Rail Barrier at Expansion Joint.

RAIL SPLICE

'A'=1 inch for prestressed concrete pavement joints, and see Bridge Expansion Device Details for joint gap 'A' in concrete deck at bridges.

RAIL EXPANSION JOINT

	INITIAL	DATE
Designed By	CDOH	
Checked By	R.A.O.	2-89
Detailed By	S.K.P.	2-89
Checked By		
Quantities By		
Checked By		

MEHEEN-WEIDLINGER ENGINEERS INC.

DIVISION OF HIGHWAYS

I 70 - SHOSHONE DAM

BRIDGE RAIL TYPE 8

Designer R. Oddo	Structure	F-08-AL (E.B. MAINLINE)
Detailer S. Perry	Numbers	
Drawing Number BAL-43 of 53 Drawings		

Revision Dates (Preliminary Stage Only)

09/15/88 LONGS:::(USER/DICKEY)b6068a

STATE OF COLORADO
STATE DEPARTMENT OF HIGHWAYS
DIVISION OF HIGHWAYS
D. O. H. FORM NO. 117.
REV. APR. 1966

AS CONSTRUCTED			
NO REVISIONS		REVISED 7-20-92	VOID

FEDERAL ROAD REGION NO.	DIVISION	PROJECT NUMBER	SHEET NUMBER
VIII	COLORADO	ID 70-2(143)	260

REVISIONS		

NOTE:
SEE DWG. NO. BAL-47 FOR PARTIAL PLAN AND SECTION AT ABUTMENT NO. 1

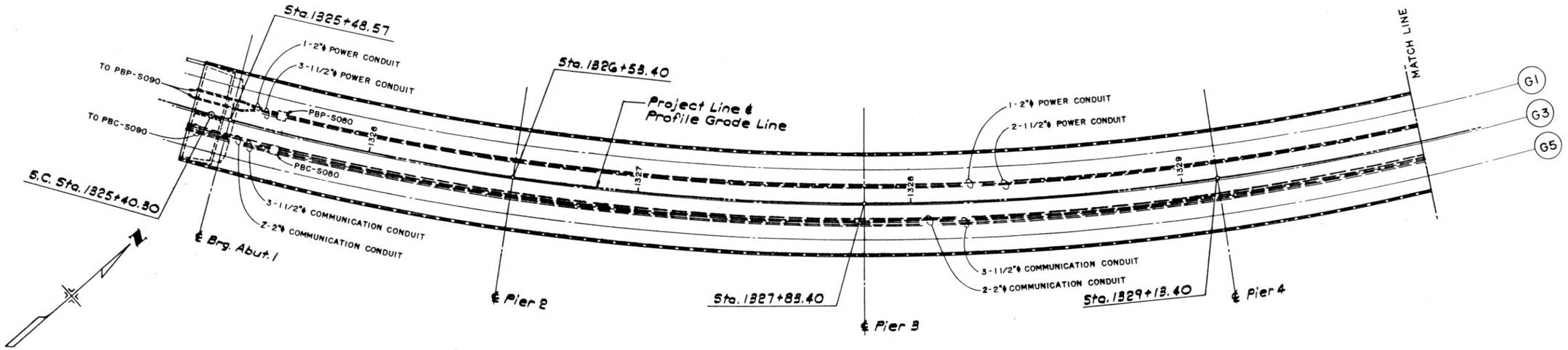

PLAN

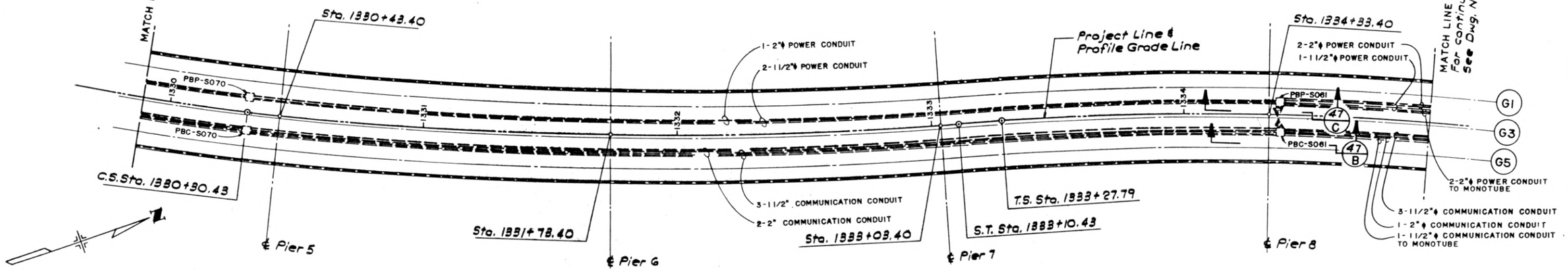

PLAN

	INITIAL	DATE
Designed By	A.V.M.	6-89
Checked By	R.A.O.	7-89
Detailed By	K.C.P.	6-89
Checked By		6-89
Quantities By		6-89
Checked By		6-89

SYMBOLS

- ——— CONDUIT
- [ ] PULL BOX/JUNCTION BOX

ABBREVIATIONS

PBC	COMMUNICATION PULL BOX/JUNCTION BOX
PBP	POWER PULL BOX/JUNCTION BOX
SB	SIGN BRIDGE

NOTES

1. SEE ELECTRICAL DRAWINGS FOR SCHEDULE OF CONDUITS.
2. PLAN IS SCHEMATIC. PULLBOXES, CONDUITS AND DEVICES ~~TO BE~~ WERE FIELD LOCATED AS REQUIRED. MAIN PULLBOXES SHOWN. CONTRACTOR ~~TO~~ INCLUDE INTERMEDIATE PULLING FITTINGS AS REQUIRED TO SATISFY MAXIMUM ALLOWABLE BENDS PER NATIONAL ELECTRIC CODE.
3. ~~AN 18"x18" OPENING IN THE BRIDGE DECK SHALL BE LOCATED~~ CENTERED ABOVE EACH (PBC & PBP) PULLBOX. ~~THE OPENING IS FOR CABLE INSTALLATION. THE OPENING SHALL BE SEALED BY THE CONTRACTOR AFTER INSTALLATION OF THE CABLES.~~

MEHEEN-WEIDLINGER ENGINEERS INC.

DIVISION OF HIGHWAYS

I70-SHOSHONE DAM

CONDUIT LAYOUT

Designer V. Murthy	Structure Numbers	F-08-AL(E.B.MAINLINE)
Detailer K. Pistorius		
Drawing Number BAL-45 of 53 Drawings		

Revision Dates	(Preliminary Stage Only)							

STATE OF COLORADO
STATE DEPARTMENT OF HIGHWAYS
DIVISION OF HIGHWAYS
D. O. H. FORM NO. 117
REV. APR. 1986

AS CONSTRUCTED			
NO REVISIONS 7/20/92	REVISED	VOID	

FEDERAL ROAD REGION NO.	DIVISION	PROJECT NUMBER	SHEET NUMBER
VIII	COLORADO	ID 70-2(143)	261

REVISIONS		

	INITIAL	DATE
Designed By	A.V.M.	6-89
Checked By	R.A.O.	7-89
Detailed By	K.C.P.	8-89
Checked By		
Quantities By		
Checked By		

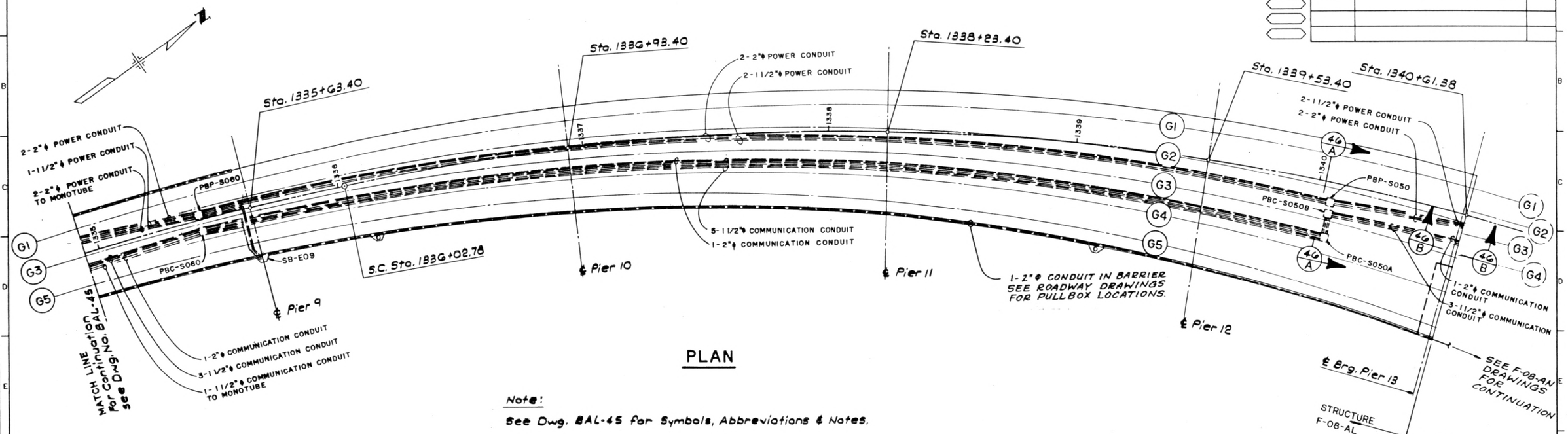

PLAN

Note:

See Dwg. BAL-45 for Symbols, Abbreviations & Notes.

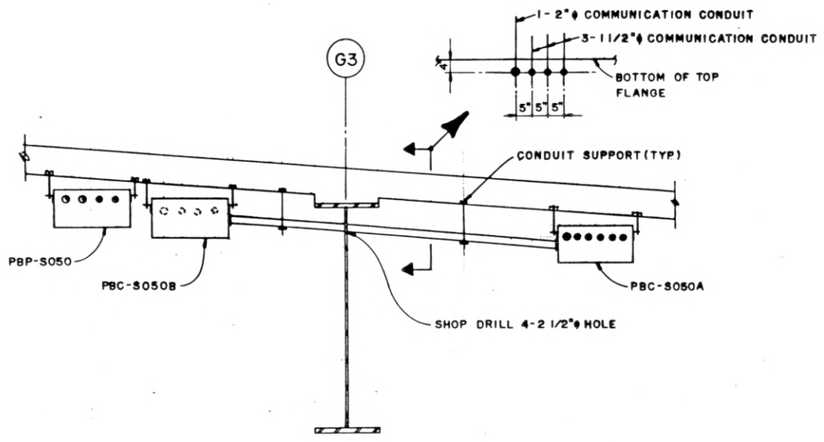

SECTION (46 A)

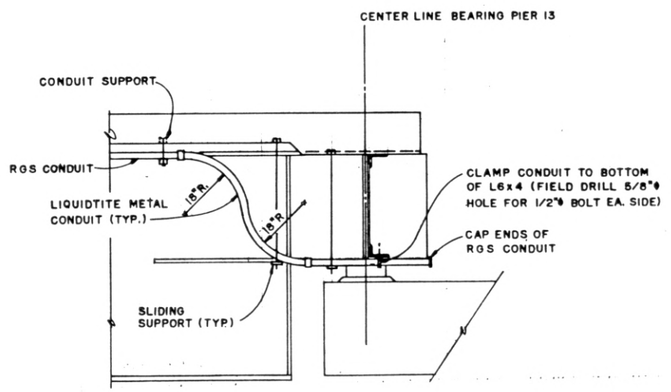

SECTION (46 B)

MEHEEN-WEIDLINGER ENGINEERS INC.

DIVISION OF HIGHWAYS

I70-SHOSHONE DAM

CONDUIT LAYOUT

Designer V. Murthy	Structure Numbers	F-08-AL(E.B.MAINLINE)
Detailer K. Pistorius		
Drawing Number BAL-46 of 53 Drawings		

Revision Dates (Preliminary Stage Only)

STATE OF COLORADO
STATE DEPARTMENT OF HIGHWAYS
DIVISION OF HIGHWAYS
D.O.H. FORM NO. 117
REV. APR. 1966

AS CONSTRUCTED			
NO REVISIONS 7/20/92	REVISED	VOID	

FEDERAL ROAD REGION NO.	DIVISION	PROJECT NUMBER	SHEET NUMBER
VIII	COLORADO	ID 70-2(143)	262

REVISIONS		

	INITIAL	DATE
Designed By	A.V.M	6-89
Checked By	R.A.C	7-89
Detailed By	K.C.P	8-89
Checked By		
Quantities By		
Checked By		

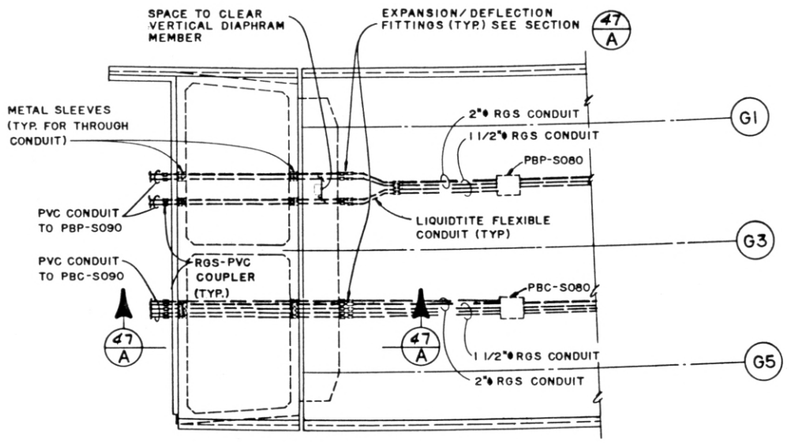

PARTIAL PLAN AT ABUTMENT NO. 1

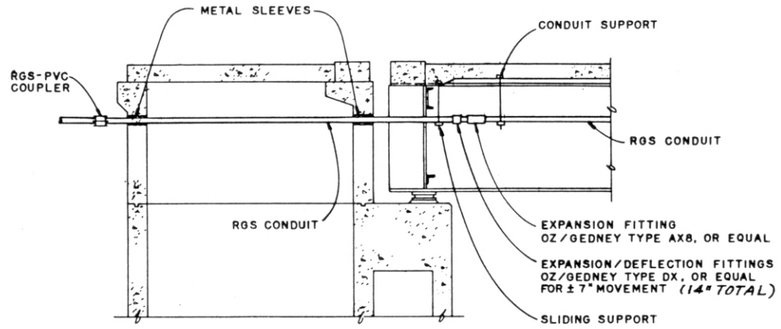

SECTION 47/A

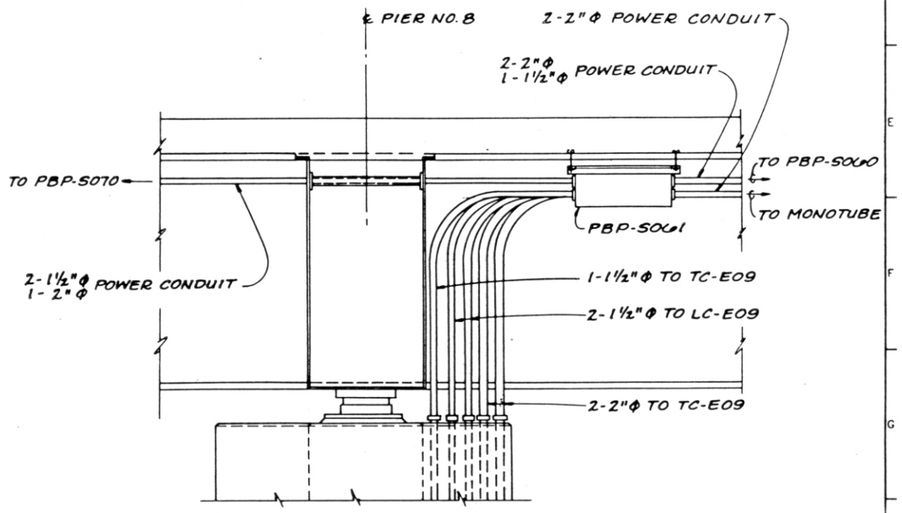

SECTION 45/C

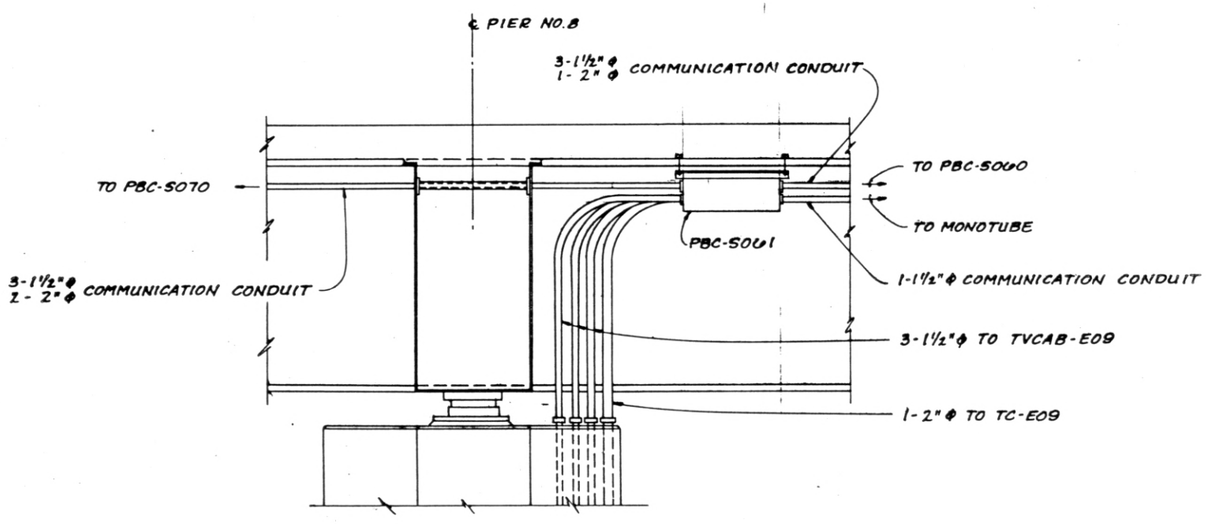

SECTION 45/B

MEHEEN-WEIDLINGER ENGINEERS INC.

DIVISION OF HIGHWAYS

I70-SHOSHONE DAM

CONDUIT SECTIONS

Designer V. Murthy		Structure Numbers	F-08-AL(E.B. MAINLINE)
Detailer K. Pistorius			
Drawing Number BAL-47 of 53 Drawings			

Revision Dates (Preliminary Stage Only)