STATE OF COLORADO
STATE DEPARTMENT OF HIGHWAYS
DIVISION OF HIGHWAYS:
D. O. H. FORM NO. 117:
REV. APR. 1986

AS CONSTRUCTED			
NO REVISIONS 8-15-90	REVISED		VOID

FEDERAL ROAD REGION NO.	DIVISION	PROJECT NUMBER	SHEET NUMBER
VIII	COLORADO	I70-2(134)	II-4

REVISIONS			
R-1	7-17-87	Segment Note	BWH

DESIGN SPECIFICATIONS:

AASHTO Standard Specifications for Highway Bridges, 1983 Edition with subsequent interim specifications.

Colorado Bridge Design Manual, Volume I and II, prepared by the Bridge Design Section of the Colorado Department of Highways.

CONSTRUCTION SPECIFICATIONS:

State Department of Highway, Division of Highways, State of Colorado - Standard Specifications for Road and Bridge Construction, 1986.

DESIGN LOADS:

DEAD LOADS:

Superstructure Concrete, including Reinforcing Steel	155 PCF
Substructure Concrete, including Reinforced Steel	150 PCF
Initial Wearing Surface	24 PSF
Future Wearing Surface	24 PSF

LIVE LOADS:

AASHTO HS20-44 and Interstate Alternate

COLORADO LEGAL LOADS:

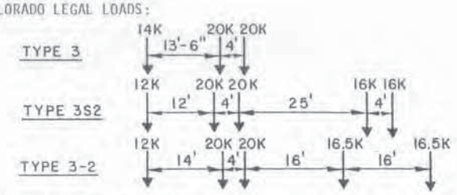

COLORADO PERMIT VEHICLE:

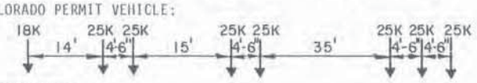

TEMPERATURE:

Temperature Rise - 45° F.
Temperature Fall - 45° F.
Temperature Mean - 40° F.

Thermal Gradient, Varies Linearly

(a) Dead Load + Prestress + 18° F. Gradient
(b) Dead Load + Prestress + Live Load + 9° F. Gradient

WIND LOADS:

AASHTO Article 3.15

CONSTRUCTION LOADS:

The Contractor shall submit calculations for the construction loading to which the bridge will be subjected. The bridge is designed to include the construction loads listed below. Loads in excess of those shown may require structural modifications. These modifications will be the responsibility of the Contractor and paid for by the Contractor.

General:

Applied wind loads and earthquake loads were not considered in analyzing the structure for stability during the construction stages.

A work platform load of 20 kips was assumed at the end of cantilevers.

When the launching truss is moving over the bridge, supported at center and rear supports, the following support reactions were assumed: center supports - 160 kips total and rear supports - 105 kips total. The distance between center and rear truss supports was assumed to be 140 feet.

Launching truss center and rear supports areas were assumed to be 3 feet by 1 feet. (The 3 feet direction was assumed to be in the direction of travel.)

Centerline of launching truss supports were assumed to be between 6.5 feet and 10.5 feet each side of centerline of box.

When the truck crane is traveling over the bridge, the following axle loads were assumed: rear axle - 75 kips and front axle - 110 kips. Distance between axles was assumed to be 22.5 feet.

The compression stress at any point in span closure pours due to dead load of segments plus prestress force shall be 1.5 times the tension stress caused by any construction loads.

Balanced Cantilever Construction - at Piers 2, 3, 4, and 5:

After closure B a 250 Kip load was assumed to act at the following distance A:

Span	Dim. A
200 ft.	60 ft.
205 ft.	65 ft.
210 ft.	70 ft.

Prior to closure C the load was assumed to be reduced to 75 Kips.

Closure form loads of 25 kips were assumed to be applied at each end of closure pours. These loads were applied to the ends of the cantilevers and were removed after the span was made continuous.

Piers 2, 3, 4, and 5 columns and footings were designed for the construction moments that result from the unbalance of one segment plus the 20 kip work platform.

Progressive Placement Construction - Segment 52 through Segment 64:

Cantilevers were designed for a crane dead load reaction of 24 Kips 4 feet from the cantilever end and 164 Kips 24.5 feet from the cantilever end, plus the weight of a segment suspended from the cantilever end.

A 75 kip reaction at Joint 59 was assumed to act during closure of Span 5.

Falsework at Spans 6 and 7 was assumed to remain in place through the erection of Segment 64.

EARTHQUAKE:

Structures were designed using AASHTO "Guide Specifications for Seismic Design of Highway Bridges", Seismic Performance Category A.

MATERIALS:

SUPERSTRUCTURE CONCRETE:

Class S f'c = 6,000 psi

SUBSTRUCTURE CONCRETE:

Cast-in-place, Class D f'c = 4,500 psi
Drilled Shafts, Class AZ f'c = 4,000 psi

REINFORCING STEEL:

All reinforcing steel shall be Grade 60.

All superstructure and substructure reinforcing steel above the footing shall be epoxy coated. Footing dowel bars shall be epoxy coated. Welded wire fabric shall be epoxy coated.

PRESTRESSING STEEL:

Prestressing bars ASTM Grade A722 Grade 150

Prestressing strands f's = 270,000 psi (Low Relaxation)

ALLOWABLE STRESSES:

INITIAL PRESTRESS:

f'ci = 4,500 psi: Precast segmental

f'ci = 3,500 psi: Cast-in-Place Closure Segment

Compression: Precast Segments - 0.55 f'ci = 2,475 psi
CIP Segments - 0.55 f'ci = 1,925 psi

Tension: 0 psi

SERVICE LOADS:

Compression: 0.4 f'c = 2,400 psi

Tension: 0 psi

No Overstress

CONSTRUCTION CONDITIONS:

Compression: 0.45 f'c = 2,700 psi

Tension: Longitudinal Direction - 0 psi at joints between segments
Transverse Direction - $3\sqrt{f'c}$ = 232 psi at top of box
$6\sqrt{f'c}$ = 465 psi at bottom of box

ANCHORAGE BEARING:

At Transfer of Load

$$fcp = 0.8\ f'ci\sqrt{\frac{A'b}{Ab} - 0.2} \leq 1.25 f'ci$$

At Service Load

$$fcp = 0.6\ f'c\sqrt{\frac{A'b}{Ab}} \leq 1.25\ f'c$$

Where:

Ab = bearing area of anchorage, in.^{2}
A'b = maximum area of anchorage surface that is geometrically similar to and concentric with area of the anchorage, in.^{2}
fcp = allowable anchorage compressive concrete stress

General Notes:

Structural excavation and backfill shall be in accordance with Standard M-206-2, unless otherwise noted.

All exposed concrete surfaces down to 1'-0" below ground line shall be finished with a class 1 finish, followed by application of a color coating meeting the requirements in the Special Provision Revision of 601, Structural Concrete (Coating).

All structural steel shall be ASTM A-36, unless otherwise noted.

The following table gives minimum lap splice length for a Class B splice of reinforcing bars indicated as continuous on the plans. Other splices not shown on the plans shall be approved by the Engineer:

Bar Size	#4	#5	#6	#7	#8	#9	#10	#11
Splice Length for Class D or S Concrete	1'-0"	1'-3"	1'-9"	2'-4"	3'-1"	3'-11"	5'-0"	6'-1"

All dimensions and radii for reinforcing bars are measured out-to-out.

All anchor bolts shall be ASTM-A687 (Galvanized).

R-1 Assumed age of each segment at time of erection = 28 days.

ABBREVIATIONS:

E.F. = Each Face
F.F. = Far Face
N.F. = Near Face

HOWARD NEEDLES TAMMEN & BERGENDOFF HNTB

DIVISION OF HIGHWAYS

FRENCH CREEK VIADUCT - I8WI
CONCRETE ALTERNATE

GENERAL NOTES

Designer B. Force		Structure Numbers	F-08-AV (I8WI)
Detailer R. Pierce			
Drawing Number B-2	of 70	Drawings	

Revision Dates			(Preliminary Stage Only)			

INITIAL	DATE	
Designed By		
Checked By		
Detailed By		
Checked By		
Quantities By		
Checked By		

LANMAN'S SUPPLY CO. 101183

STATE OF COLORADO
STATE DEPARTMENT OF HIGHWAYS
DIVISION OF HIGHWAYS
D. O. H. FORM NO. 117
REV. APR. 1986

AS CONSTRUCTED			
NO REVISIONS		REVISED 8-15-90	VOID

FEDERAL ROAD REGION NO.	DIVISION	PROJECT NUMBER	SHEET NUMBER
VIII	COLORADO	I70-2(134)	II-6

REVISIONS		
CR-1	8-15-90	Add elevations

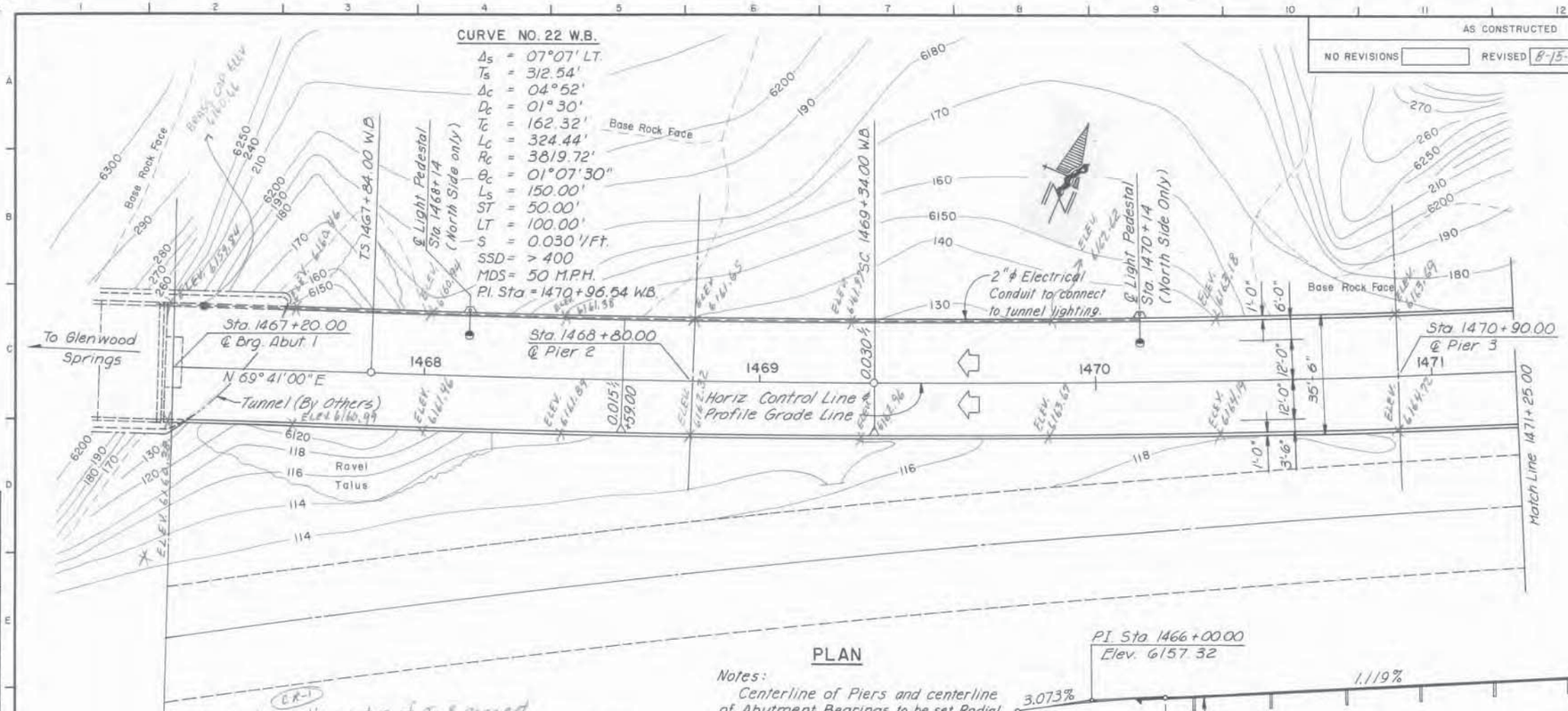

PLAN

Notes:
Centerline of Piers and centerline of Abutment Bearings to be set Radial to Horizontal Control Line.
Contours were based on information developed during and prior to 1985.

CR-1
* Carriage bolts on top of Ty. 8 parapet at Abut's. 1/4 span 1/2 span 3/4 span & Piers Lt. & Rt.

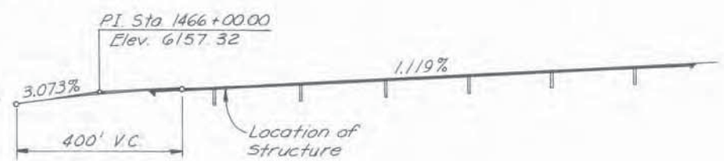

PROFILE GRADE

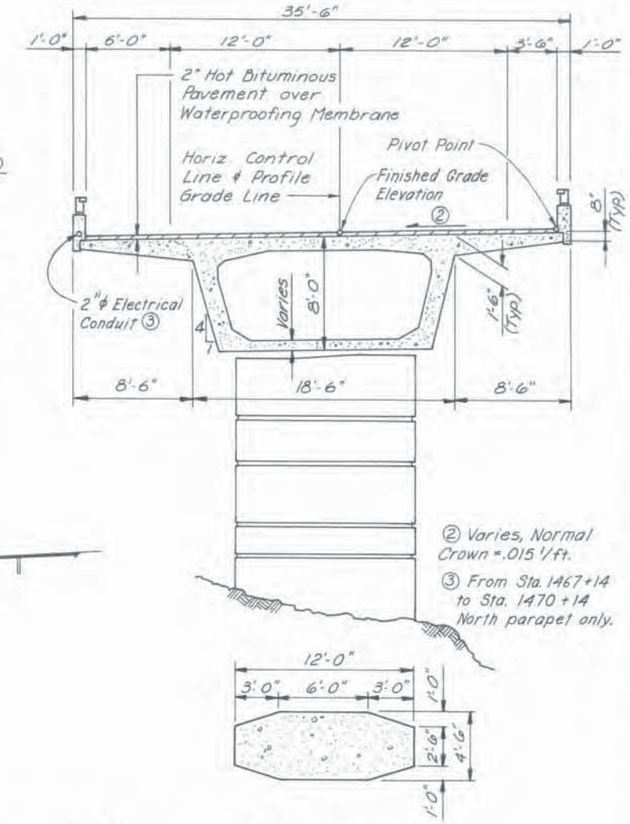

② Varies, Normal Crown = .015 '/ft.
③ From Sta. 1467+14 to Sta. 1470+14 North parapet only.

TYPICAL SECTION

Note: Live Loading HS 20-44 and Interstate Alternate.

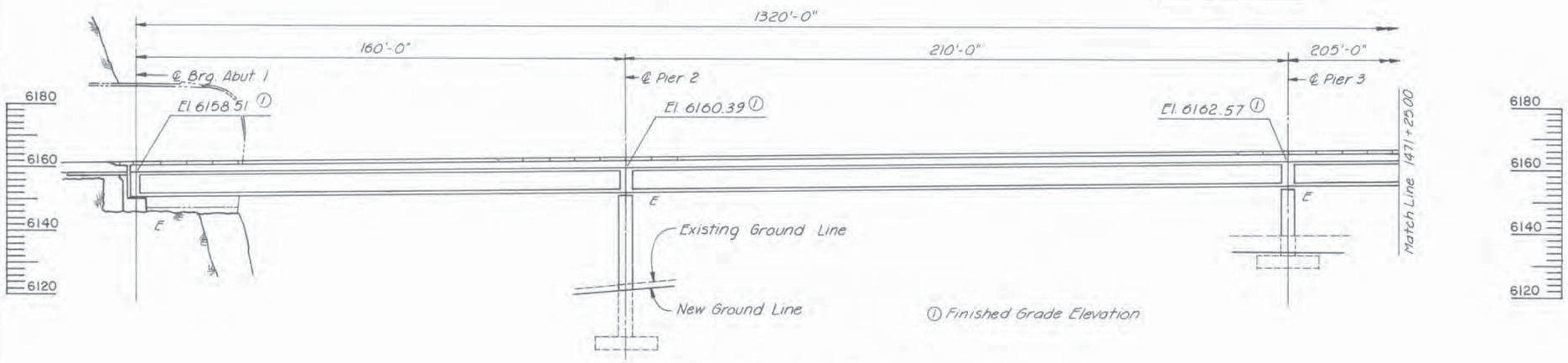

① Finished Grade Elevation

SECTION TAKEN ALONG HCL

Note: For specific foundation details, see Foundation Type Study.

1468 1469 1470 1471

	INITIAL	DATE			
Designed By	BWH	8-86	Checked By	BWH	9-86
Checked By	MLP	8-86	Quantities By	DDH	9-86
Detailed By	MLP	8-86	Checked By		

HOWARD NEEDLES TAMMEN & BERGENDOFF HNTB

DIVISION OF HIGHWAYS

FRENCH CREEK VIADUCT - 18W1
CONCRETE ALTERNATE

GENERAL LAYOUT

Designer B. Haynes	Structure	F-08-AV	
Detailer M. Poitra	Numbers	(18W1)	
Drawing Number B-4	of 70	Drawings	

Revision Dates (Preliminary Stage Only)

LANMAN'S SUPPLY CO. 101185

STATE OF COLORADO
STATE DEPARTMENT OF HIGHWAYS
DIVISION OF HIGHWAYS:
D. O. R. FORM NO. 117:
REV. APR. 1986

AS CONSTRUCTED		
NO REVISIONS	REVISED 8-15-90	VOID

FEDERAL ROAD REGION NO.	DIVISION	PROJECT NUMBER	SHEET NUMBER
VIII	COLORADO	170-2(134)	II-7

REVISIONS		
CR-1	8-15-90	Add elevations

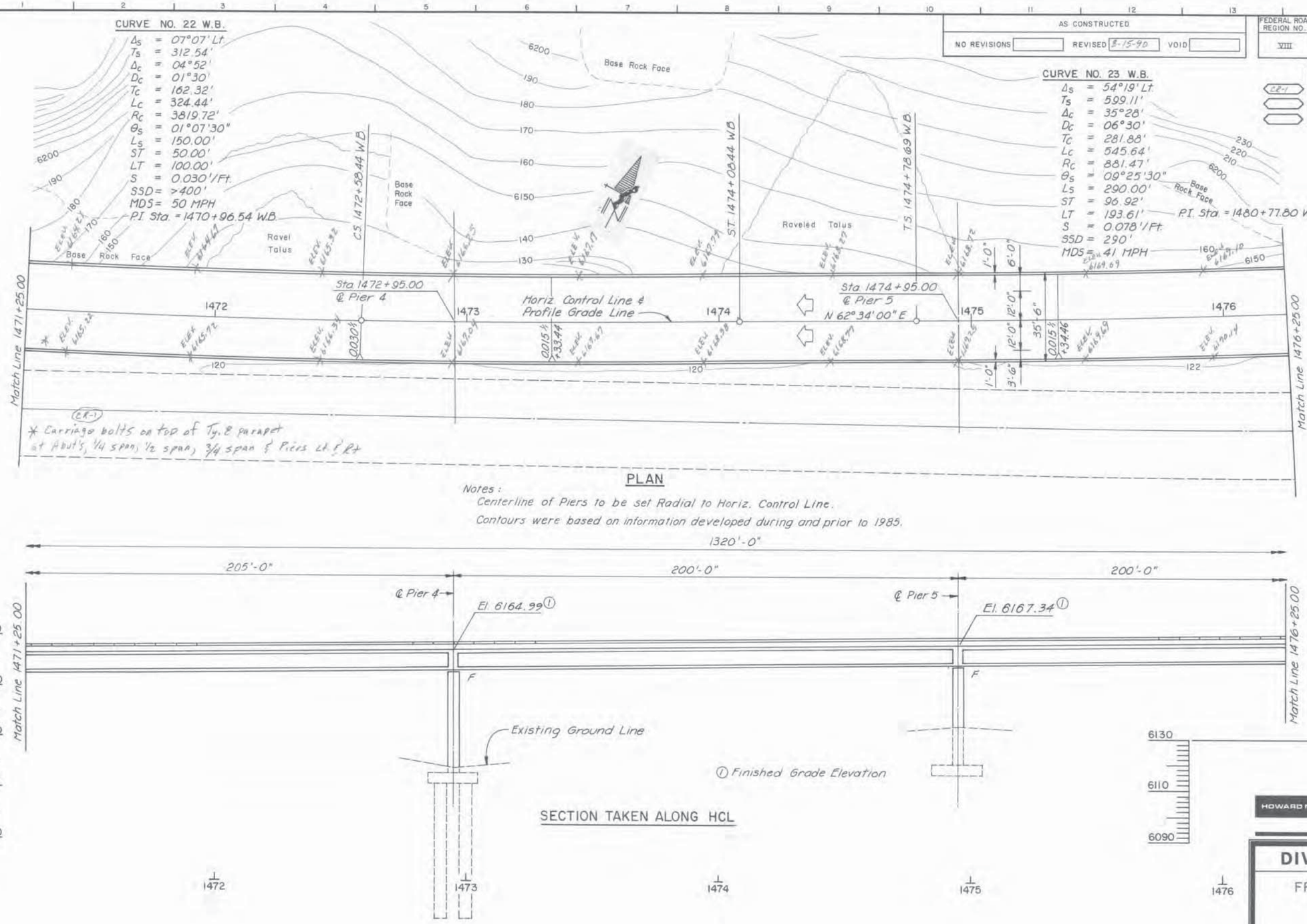

PLAN

Notes:
Centerline of Piers to be set Radial to Horiz. Control Line.
Contours were based on information developed during and prior to 1985.

SECTION TAKEN ALONG HCL

HOWARD NEEDLES TAMMEN & BERGENDOFF HNTB

DIVISION OF HIGHWAYS

FRENCH CREEK VIADUCT - I8WI
CONCRETE ALTERNATE

GENERAL LAYOUT

Designer B. Haynes		Structure Numbers	F-08-AV (I8WI)
Detailer M. Poitra			
Drawing Number B-5	of 70	Drawings	

INITIAL	DATE	
Designed By	B.W.H.	8-86
Checked By	M.L.P.	8-86
Detailed By	M.L.P.	8-86
Checked By	B.W.H.	9-86
Quantities By	D.D.H.	9-86
Checked By		

Revision Dates (Preliminary Stage Only)

LAMMAN'S SUPPLY CO 131185

STATE OF COLORADO
STATE DEPARTMENT OF HIGHWAYS
DIVISION OF HIGHWAYS
D. O. H. FORM NO. 117
REV. APR. 1986

AS CONSTRUCTED			
NO REVISIONS		REVISED 8-15-90	VOID

FEDERAL ROAD REGION NO.	DIVISION	PROJECT NUMBER	SHEET NUMBER
VIII	COLORADO	I70-2(134)	II-8

REVISIONS		
CR-1	8-15-90	Add Elevations

Note:
Contours shown from Pier 6 to Abutment 8 differ from actual due to recent earthwork for which existing topographical information is not available.

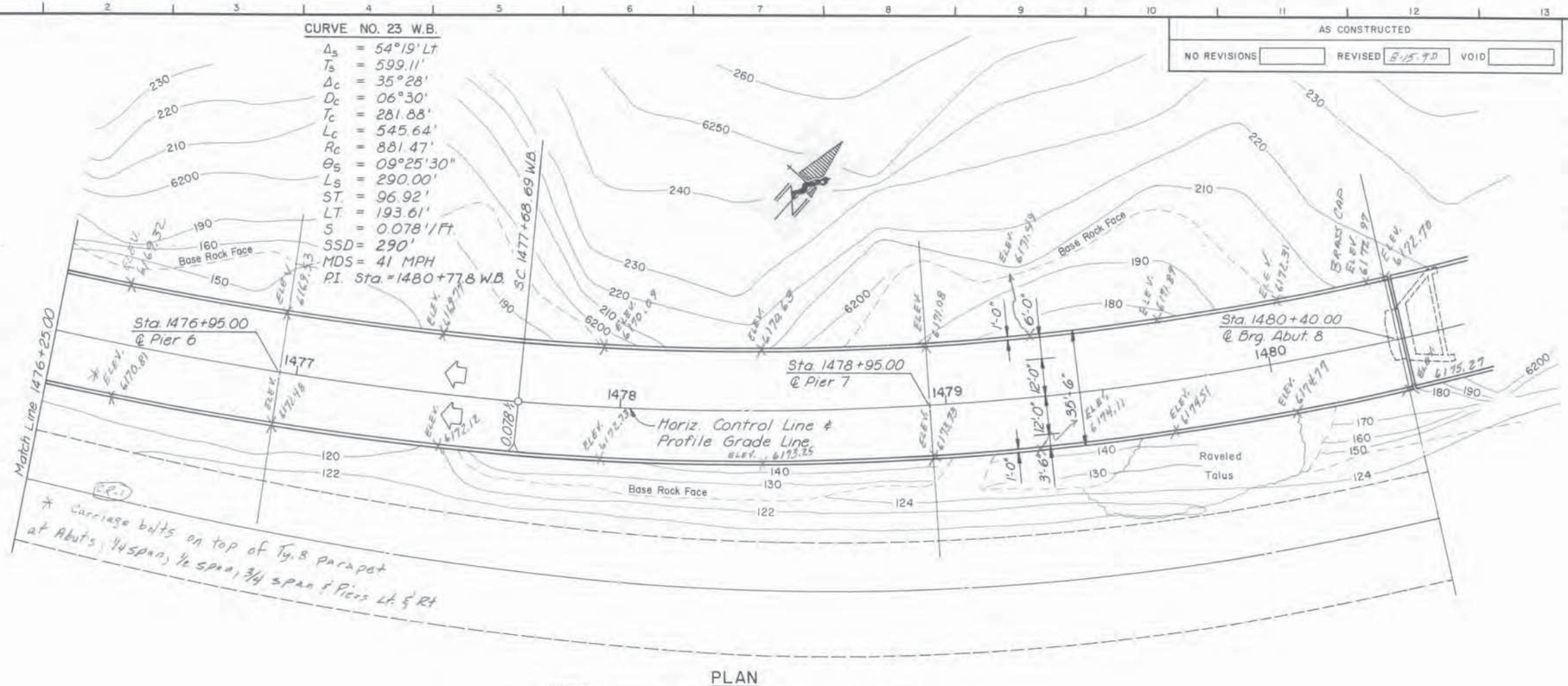

PLAN

Notes:
Centerline of Piers and centerline of Abutment Bearings to be set Radial to Horizontal Control Line.

Contours were based on information developed during and prior to 1985.

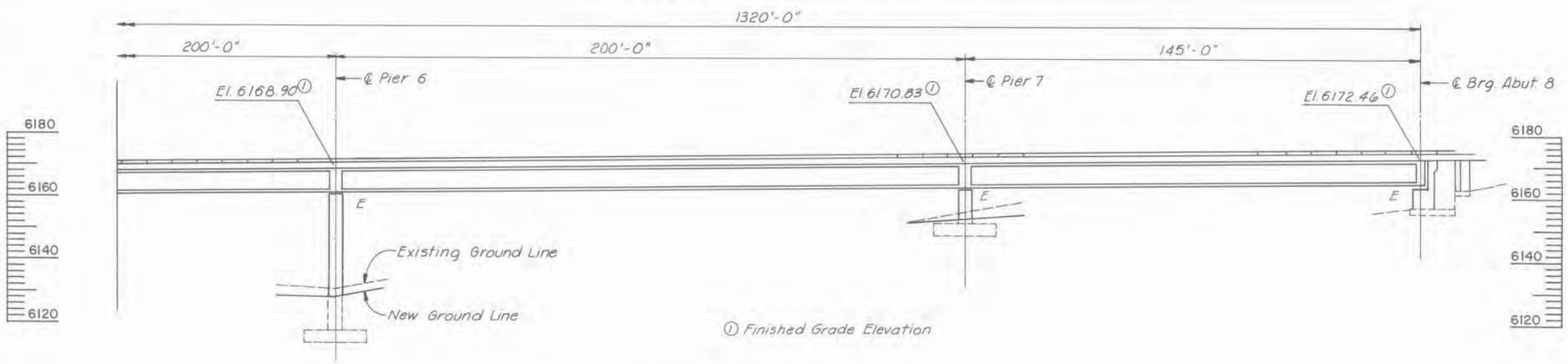

SECTION TAKEN ALONG HCL

1477 1478 1479 1480

INITIAL	DATE	
Designed By	BWH	8-86
Checked By	MLP	8-86
Detailed By	MLP	8-86
Checked By	BWH	9-86
Quantities By	DDH	9-86
Checked By		

HOWARD NEEDLES TAMMEN & BERGENDOFF HNTB

DIVISION OF HIGHWAYS

FRENCH CREEK VIADUCT - 18WI
CONCRETE ALTERNATE

GENERAL LAYOUT

Designer B. Haynes	Structure Numbers	F-08-AV (18WI)
Detailer M. Poitra		
Drawing Number B-6 of 70 Drawings		

Revision Dates (Preliminary Stage Only)

LANMAN'S SUPPLY CO. 101182

STATE OF COLORADO
STATE DEPARTMENT OF HIGHWAYS
DIVISION OF HIGHWAYS
D. O. H. FORM NO. 117
REV. APR. 1966

AS CONSTRUCTED			
NO REVISIONS 8-15-90	REVISED		VOID

FEDERAL ROAD REGION NO.	DIVISION	PROJECT NUMBER	SHEET NUMBER
VIII	COLORADO	I 70 - 2 (134)	II - 25

REVISIONS		

CURVE DATA

CURVE NO.	BEGIN CURVE COORDINATE NORTH	BEGIN CURVE COORDINATE EAST	P.I. COORDINATE NORTH	P.I. COORDINATE EAST	END CURVE COORDINATE NORTH	END CURVE COORDINATE EAST	CENTER CURVE COORDINATE NORTH	CENTER CURVE COORDINATE EAST	Δ	D	R	T	L	E	BACK BEARING	AHEAD BEARING	CURVE NO.
T1					648975.755	1532852.432									N 69°41'00.0"E	N 69°41'00.0"E	T1
22A	648975.755	1532852.432	648988.232	1532886.130	649000.949	1532919.739	658404.876	1529361.376	0°24'34.3"	0°34'11.4"	1005.64	35.93	71.87	0.06	N 69°41'00.0"E	N 69°16'25.7"E	22A
22B	649000.949	1532919.739	649010.528	1532945.053	649020.422	1532970.247	653055.398	1531385.571	0°42'55.7"	1°19'18.1"	4335.00	27.07	54.13	0.08	N 69°16'25.7"E	N 68°33'30.0"E	22B
22C	649020.422	1532970.247	649079.759	1533121.333	649151.699	1533266.840	652575.778	1531573.934	4°52'00.0"	1°30'00.0"	3819.72	162.32	324.44	3.45	N 68°33'30.0"E	N 63°41'30.0"E	22C
22D	649151.699	1533266.840	649163.694	1533291.103	649175.992	1533315.214	653037.688	1531345.561	0°42'55.7"	1°19'18.1"	4335.00	27.07	54.13	0.08	N 63°41'30.0"E	N 62°58'34.3"E	22D
22E	649175.992	1533315.214	649192.320	1533347.225	649208.875	1533379.118	658132.846	1528746.782	0°24'34.3"	0°34'11.4"	1005.464	35.93	71.87	0.06	N 62°58'34.3"E	N 62°34'00.0"E	22E
T2	649208.875	1533379.118			649273.949	1533504.480							141.25		N 62°34'00.0"E	N 62°34'00.0"E	T2
23A	649273.949	1533504.480	649305.965	1533566.157	649341.647	1533625.787	651314.498	1532445.253	3°27'45.2"	2°29'31.6"	2299.09	69.49	138.94	1.05	N 62°34'00.0"E	N 59°06'14.8"E	23A
23B	649341.647	1533625.787	649368.389	1533670.476	649399.628	1533712.146	650199.749	1533112.308	5°57'44.8"	5°43'46.5"	1000.00	52.08	104.06	1.36	N 59°06'14.8"E	N 53°08'30.0"E	23B
23C	649399.628	1533712.146	649568.710	1533937.683	649837.282	1534023.266	650104.913	1533183.404	35°27'59.9"	6°30'00.0"	881.47	281.88	545.64	43.97	N 53°08'30.0"E	N 17°40'30.1"E	23C
23D	649837.282	1534023.266	649886.903	1534039.079	649937.898	1534049.651	650140.900	1533070.472	5°57'44.8"	5°43'46.5"	1000.00	52.08	104.06	1.36	N 17°40'30.1"E	N 11°42'45.3"E	23D
23E	649937.898	1534049.651	650005.943	1534063.758	650074.715	1534073.729	650404.618	1531798.434	3°27'45.2"	2°29'31.6"	2299.09	69.49	138.94	1.05	N 11°42'45.3"E	N 8°15'00.1"E	23E
T3	650074.715	1534073.729													N 8°15'00.1"E	N 8°15'00.1"E	T3

Note:
T denotes a tangent length and only the coordinates at beginning and end are given.

	INITIAL	DATE	
Designed By	EPK	8-86	
Checked By	TNS	8-86	
Detailed By	PAC	8-86	
Checked By	TNS	9-86	
Quantities By	BWH	1-87	
Checked By			

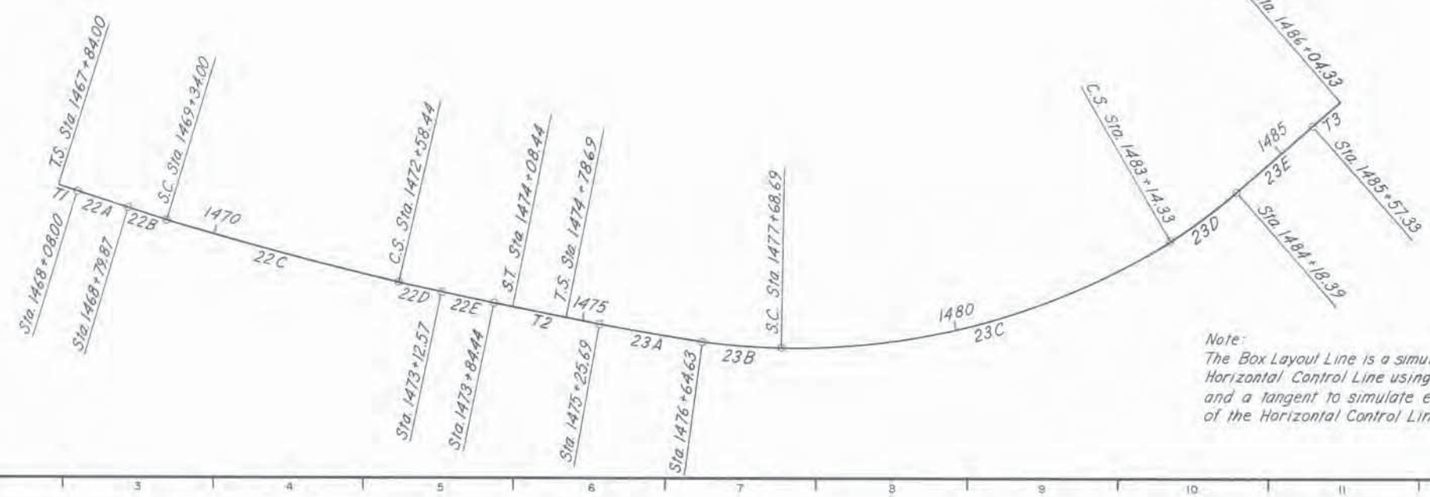

Note:
The Box Layout Line is a simulation of the Horizontal Control Line using two curves and a tangent to simulate each spiral of the Horizontal Control Line

HOWARD NEEDLES TAMMEN & BERGENDOFF HNTB

DIVISION OF HIGHWAYS

FRENCH CREEK VIADUCT - I8WI
CONCRETE ALTERNATE

BOX LAYOUT LINE
GEOMETRY

Designer E. Kollar	Structure Numbers	F-08-AV
Detailer P. Carberry		(I8WI)
Drawing Number B - 22 of 70 Drawings		

Revision Dates (Preliminary Stage Only)

LAMMAN'S SUPPLY CO. 101165

STATE OF COLORADO
STATE DEPARTMENT OF HIGHWAYS
DIVISION OF HIGHWAYS
D. O. H. FORM NO. 117
REV. APR. 1986

AS CONSTRUCTED			
NO REVISIONS 8-15-90	REVISED	VOID	

FEDERAL ROAD REGION NO.	DIVISION	PROJECT NUMBER	SHEET NUMBER
VIII	COLORADO	I70-2(134)	II-29

REVISIONS		

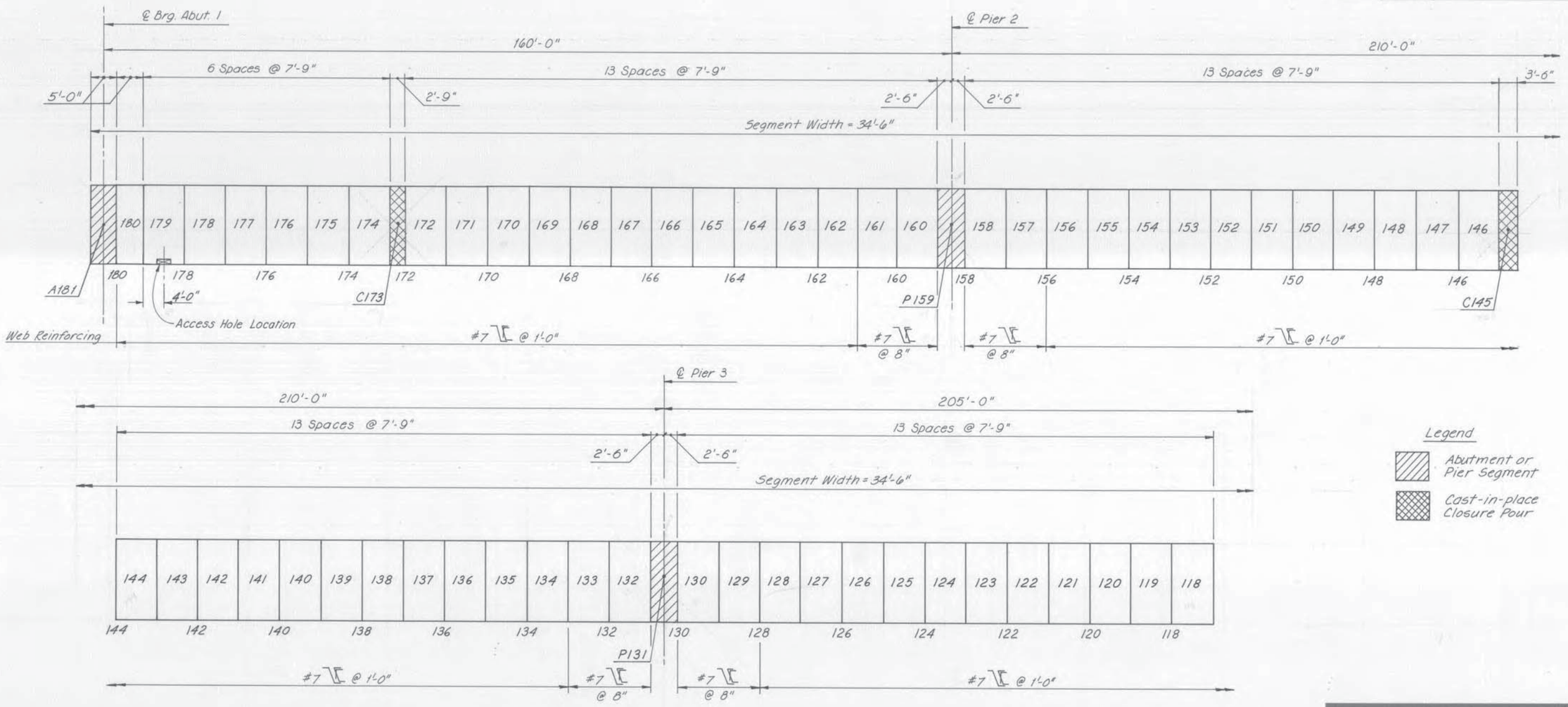

Legend

- Abutment or Pier Segment
- Cast-in-place Closure Pour

	INITIAL	DATE	
Designed By	DMJ	8-86	Checked By
Checked By	EPK	8-86	Quantities By
Detailed By	MLP	8-86	Checked By

	INITIAL	DATE	
DMJ	9-86	Checked By	
BWH	1-87		
EPK	9-86	Quantities By	
PAC	1-87	Checked By	

HOWARD NEEDLES TAMMEN & BERGENDOFF HNTB

DIVISION OF HIGHWAYS

FRENCH CREEK VIADUCT - I8WI
CONCRETE ALTERNATE

SEGMENT DESIGNATION I

Designer D. Jones		Structure Numbers	F-08-AV (I8WI)
Detailer M. Poitra			
Drawing Number B-26	of 70		Drawings

Revision Dates (Preliminary Stage Only)

STATE OF COLORADO
STATE DEPARTMENT OF HIGHWAYS
DIVISION OF HIGHWAYS
D. O. H. FORM NO. 117
REV. APR. 1986

AS CONSTRUCTED			
NO REVISIONS 8-15-90	REVISED		VOID

FEDERAL ROAD REGION NO.	DIVISION	PROJECT NUMBER	SHEET NUMBER
VIII	COLORADO	I70-2(134)	II-30

REVISIONS		

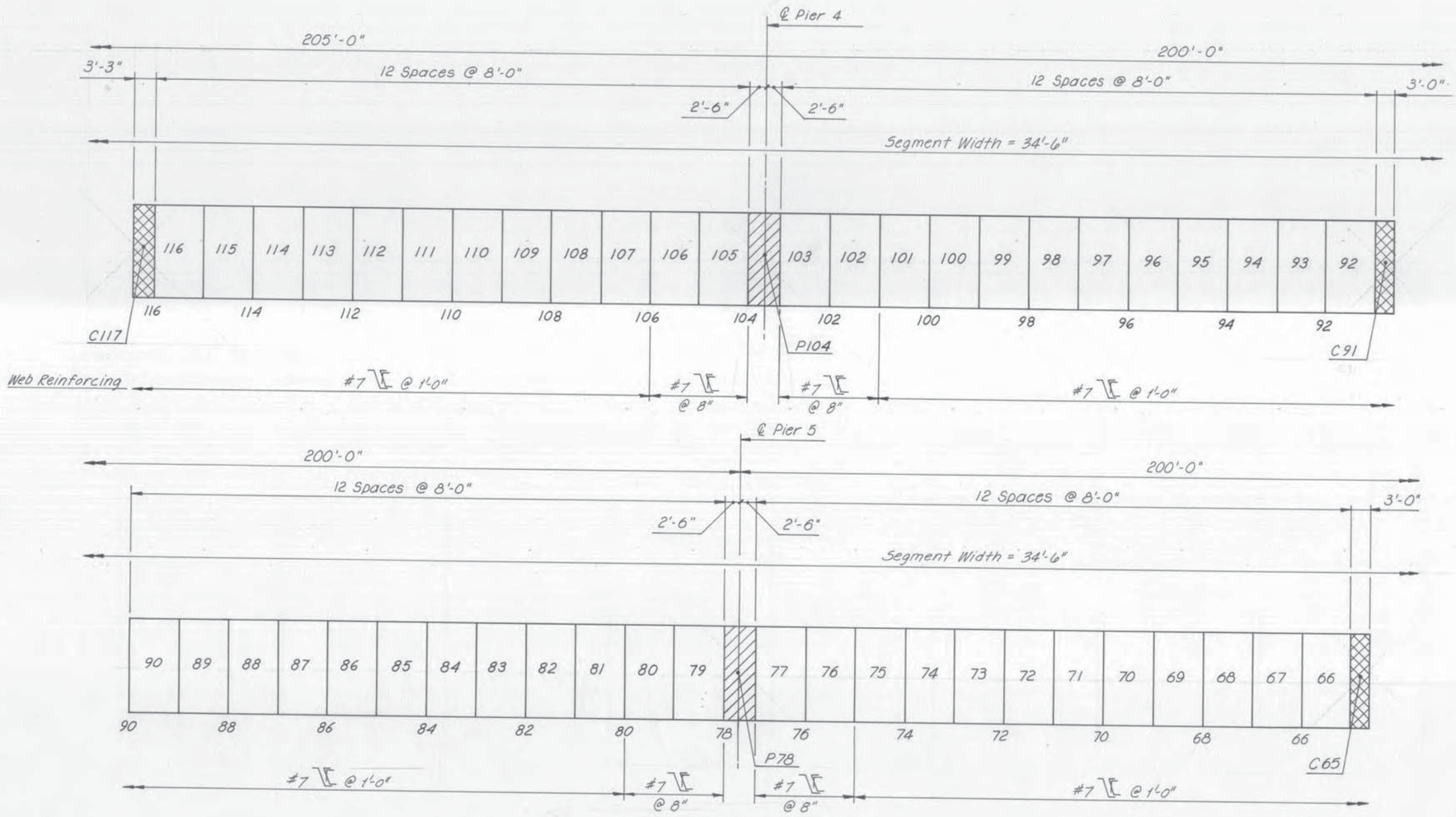

Legend

Abutment or Pier Segment

Cast-in-place Closure Pour

INITIAL	DATE	
Designed By	DMJ	8-86
Checked By	EPK	8-86
Detailed By	MLP	8-86
Checked By	DMJ	9-86
Quantities By	BWH	1-87
Checked By	EPK	9-86
	PAC	1-87

HOWARD NEEDLES TAMMEN & BERGENDOFF HNTB

DIVISION OF HIGHWAYS

FRENCH CREEK VIADUCT - 18W1
CONCRETE ALTERNATE

SEGMENT DESIGNATION II

Designer	D. Jones	Structure Numbers	F-08-AV (18W1)
Detailer	M. Poitra		
Drawing Number	B-27 of 70 Drawings		

Revision Dates (Preliminary Stage Only)

STATE OF COLORADO
STATE DEPARTMENT OF HIGHWAYS
DIVISION OF HIGHWAYS
C. O. H. FORM NO. 117
REV. APR. 1986

AS CONSTRUCTED			
NO REVISIONS		REVISED	VOID 8-15-90

FEDERAL ROAD REGION NO.	DIVISION	PROJECT NUMBER	SHEET NUMBER
VIII	COLORADO	I 70-2(134)	II-31

REVISIONS

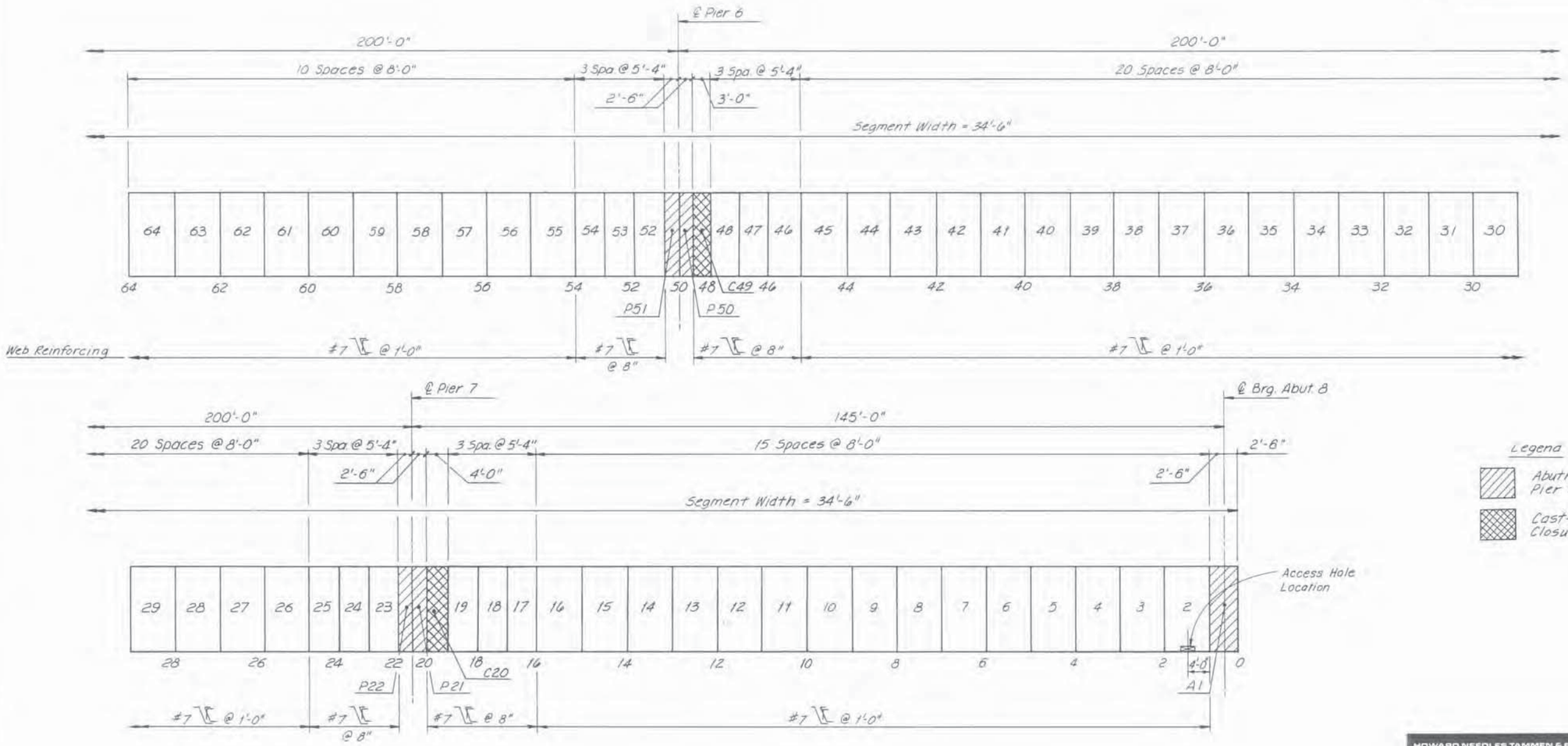

	INITIAL	DATE			
Designed By	DMJ	8-86	Checked By	DMJ	9-86
Checked By	EPK	8-86	Quantities By	BWH	1-87
Detailed By	MLP	8-86	Checked By	EPK	9-86
				PAC	1-87

HOWARD NEEDLES TAMMEN & BERGENDOFF HNTB

DIVISION OF HIGHWAYS

FRENCH CREEK VIADUCT - 18W1
CONCRETE ALTERNATE

SEGMENT DESIGNATION III

Designer D. Jones	Structure	F-08-AV
Detailer M. Poitra	Numbers	(18W1)
Drawing Number B-28	of 70	Drawings

Revision Dates (Preliminary Stage Only)

STATE OF COLORADO
STATE DEPARTMENT OF HIGHWAYS
DIVISION OF HIGHWAYS
D. O. H. FORM NO. 117
REV. APR. 1986

AS CONSTRUCTED			
NO REVISIONS 8-15-90	REVISED	VOID	

REVISIONS DURING CONSTRUCTION			
CR-1	1-12-89	Amt. of Segments, Spacing, & Note	CEM

FEDERAL ROAD REGION NO.	DIVISION	PROJECT NUMBER	SHEET NUMBER
VIII	COLORADO	I 70-2(134)	II-31A

REVISIONS		

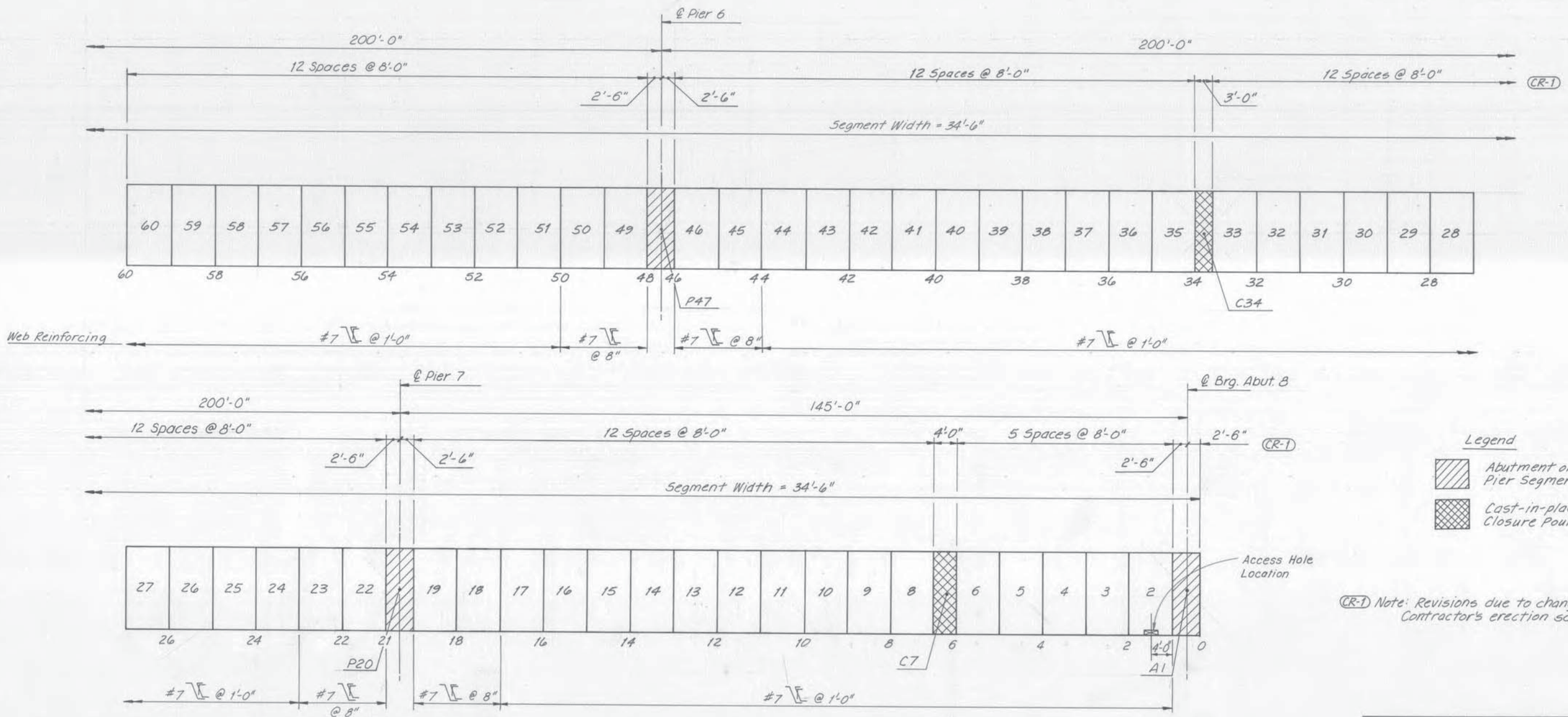

Legend

Abutment or Pier Segment

Cast-in-place Closure Pour

CR-1 Note: Revisions due to changes in Contractor's erection scheme.

	INITIAL	DATE			DM/	9-86
Designed By	DMJ	8-86	Checked By		BWH	1-87
Checked By	EPK	8-86	Quantities By		EPK	9-86
Detailed By	MLP	8-86	Checked By		PAC	1-87

HOWARD NEEDLES TAMMEN & BERGENDOFF HNTB

DIVISION OF HIGHWAYS

FRENCH CREEK VIADUCT - I8WI
CONCRETE ALTERNATE

SEGMENT DESIGNATION III

Designer D. Jones		Structure Numbers	F-08-AV (I8WI)
Detailer M. Poitra			
Drawing Number B-28A	of 70		Drawings

Revision Dates (Preliminary Stage Only)

STATE OF COLORADO
STATE DEPARTMENT OF HIGHWAYS
DIVISION OF HIGHWAYS
S. D. H. FORM NO. 117
REV. APR. 1986

AS CONSTRUCTED			
NO REVISIONS		REVISED 8-15-90	VOID

FEDERAL ROAD REGION NO.	DIVISION	PROJECT NUMBER	SHEET NUMBER
VIII	COLORADO	I 70-2 (134)	II-32

REVISIONS During Construction		
CR-1	3-29-88	Revise Btm. slab fillets

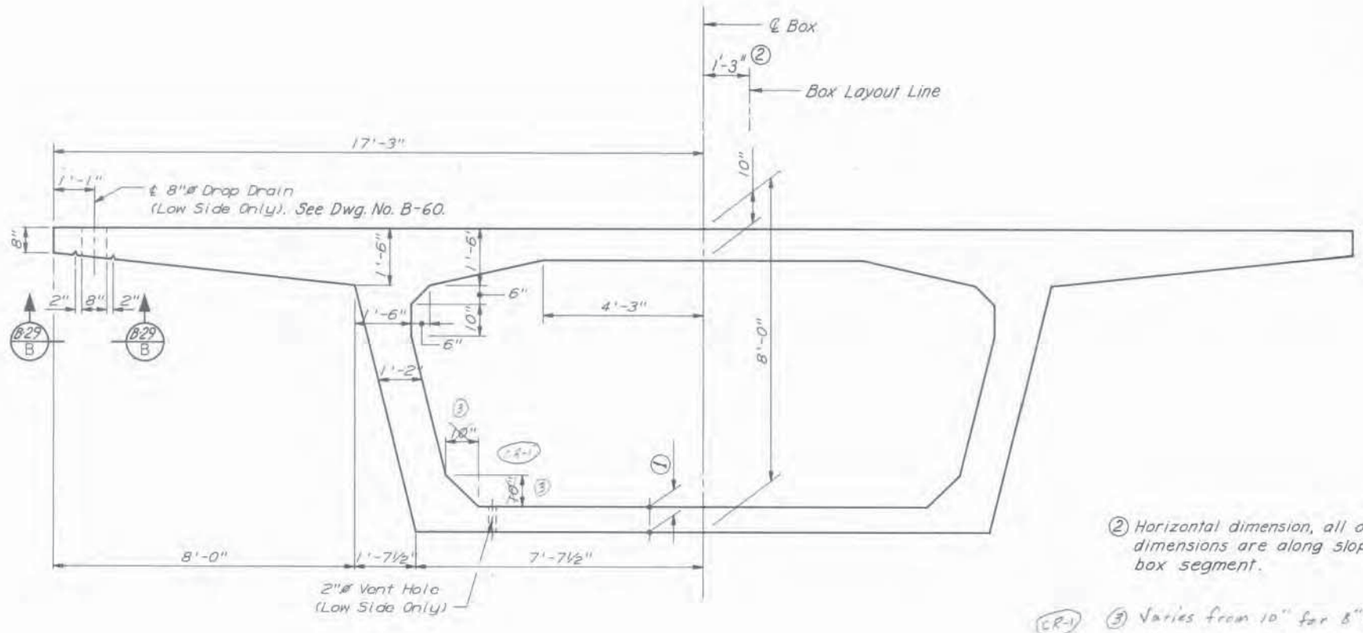

TYPICAL CROSS-SECTION

① 8", unless otherwise noted on Dwg. No. B-42.

② Horizontal dimension, all other dimensions are along slope of box segment.

CR-1 ③ Varies from 10" for 8" bottom slab thickness to 0" for 18" bottom slab thickness

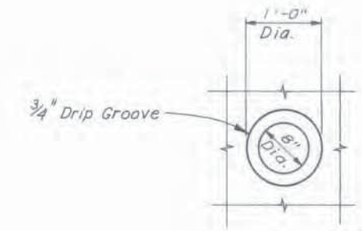

VIEW B29 B

	INITIAL	DATE			DATE
Designed By	BPF	3-88	Checked By	DMJ	10-88
Checked By	DEK	4-88	Quantities By	BWH	1-89
Detailed By	HM	7-88	Checked By	EPK	9-88
				PKC	1-89

HOWARD NEEDLES TAMMEN & BERGENDOFF HNTB

DIVISION OF HIGHWAYS

FRENCH CREEK VIADUCT - I8WI
CONCRETE ALTERNATE

TYPICAL SEGMENT
DIMENSIONS

Designer	B. Foree	Structure Numbers	F-08-AV (I8WI)
Detailer	H. Madison		
Drawing Number	B-29 of 70		Drawings

Revision Dates (Preliminary Stage Only)

LANMAN'S SUPPLY CO.

STATE OF COLORADO
STATE DEPARTMENT OF HIGHWAYS
DIVISION OF HIGHWAYS
D. O. H. FORM NO. 117
REV. APR. 1986

AS CONSTRUCTED			
NO REVISIONS		REVISED 8-15-90	VOID

FEDERAL ROAD REGION NO.	DIVISION	PROJECT NUMBER	SHEET NUMBER
VIII	COLORADO	I 70-2(134)	II-33

REVISIONS During Construction		
CR-1	5-27-88	Rev. Btm. slab fillet Reinf.

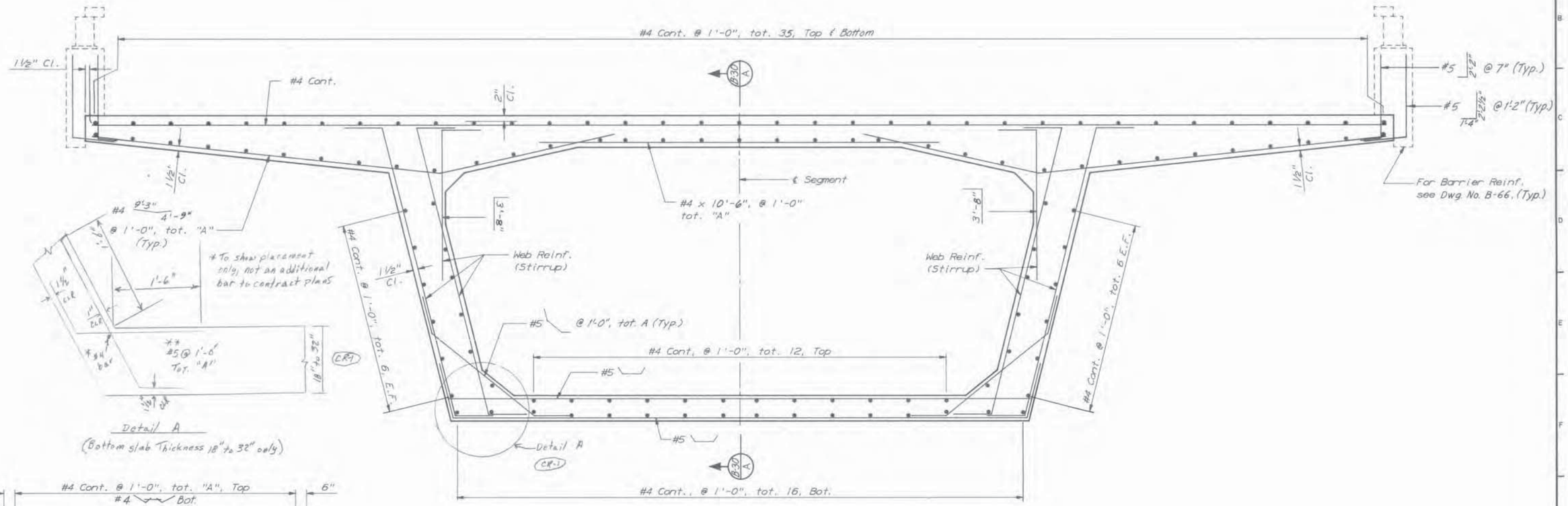

TYPICAL CROSS SECTION

Detail A
(Bottom slab Thickness 18" to 32" only)

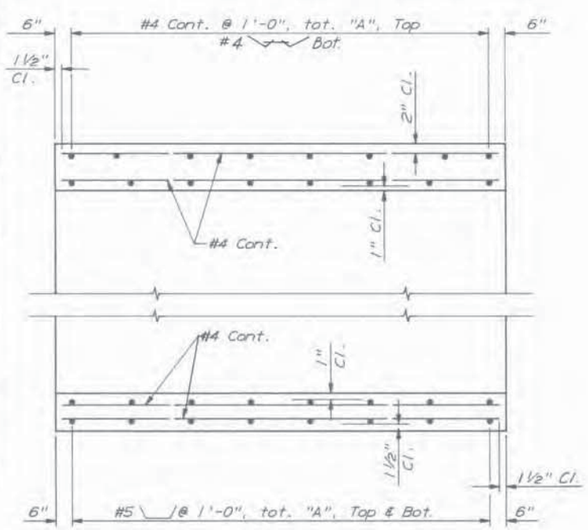

SECTION B30 A

CR-1 ** These bars shall replace #5 @ 1'-0", tot. "A" indicated in "Typical Cross Section" in typical segments where fillets do not occur. Except as shown, these bars shall be bent, epoxy coated and placed in accordance with this sheet and the other requirements of the contract documents.

Notes:
For Web Reinforcing see "Segment Designation".

SEGMENT	NO. OF SEGMENTS	"A"
C2'-9"	1	3
C3'-0"	3	3
C3'-3"	1	4
C3'-6"	1	4
C4'-0"	1	4
5'-0"	1	5
5'-4"	12	6
7'-9"	58	8
8'-0"	93	8

	INITIAL	DATE		DM	10-86
Designed By	BPF	3-86	Checked By	BVH	1-87
Checked By	DEK	4-86	Quantities By	EDK	9-86
Detailed By	HM	7-86	Checked By	PAC	1-87

HOWARD NEEDLES TAMMEN & BERGENDOFF HNTB

DIVISION OF HIGHWAYS

FRENCH CREEK VIADUCT - I8WI
CONCRETE ALTERNATE

TYPICAL SEGMENT REINFORCEMENT

Designer	B. Foree	Structure Numbers	F-08-AV (I8WI)
Detailer	H. Madison		
Drawing Number	B-30	of 70	Drawings

Revision Dates (Preliminary Stage Only)

LANMAN'S SUPPLY CO. 191165

STATE OF COLORADO
STATE DEPARTMENT OF HIGHWAYS
DIVISION OF HIGHWAYS
D. D. N. FORM NO. 117.
REV. APR. 1986

AS CONSTRUCTED		
NO REVISIONS	REVISED	VOID 8-15-90

FEDERAL ROAD REGION NO.	DIVISION	PROJECT NUMBER	SHEET NUMBER
VIII	COLORADO	I 70-2(134)	II-34

REVISIONS		

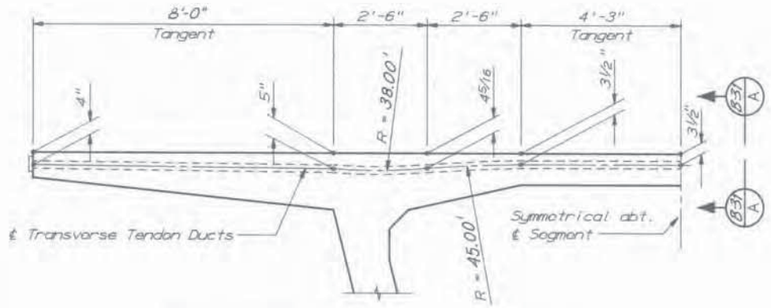

TRANSVERSE TENDON DUCT PROFILE

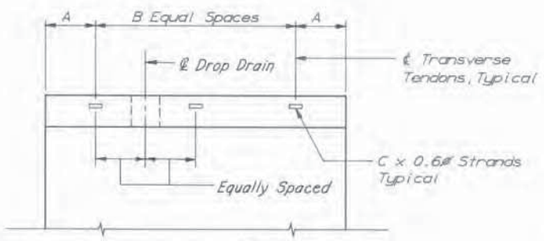

SECTION B-31 A

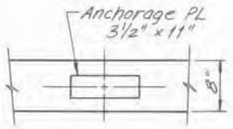

TABLE OF DIMENSIONS			
Segment Width	A	B	C
2'-6"	1'-3"	–	4
2'-9"	0'-8 1/4"	1	2
3'-0"	0'-9"	1	3
3'-3"	0'-9 3/4"	1	3
3'-6"	0'-10 1/2"	1	3
4'-0"	1'-0"	1	3
5'-0"	1'-3"	1	4
5'-4"	1'-4"	1	4
7'-9"	1'-3 1/2"	2	4
8'-0"	1'-4"	2	4

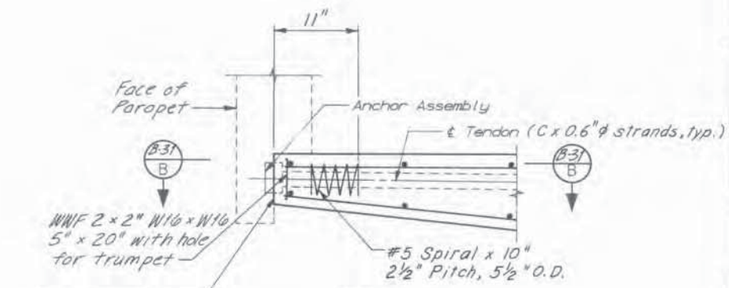

DETAIL A

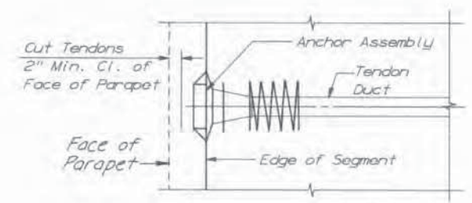

SECTION B-31 B

Notes:

1. All tendons are single end stressed.
2. The stressing end for all tendons in a segment shall be staggered.
3. Transverse tendons shall consist of low relaxation strands in flat corrugated polyethylene ducts.
4. Strands are 0.6" diameter, grade 270.
5. Assumed jacking stress is 75% of ultimate strength. Maximum permitted prestress force after initial losses is 70% of ultimate strength.
6. Assumed friction loss coeficients: M=0.15, K=0.0002/ft.
7. Assumed anchor set = 3/8".
8. Segment width is measured along box layout line.
9. Long term prestress force is assumed to be 60% of ultimate strength.
10. Prestress force after anchor set at near web, box centerline and far web is assumed to be 99%, 98% and 97% of stressed end prestress force, respectively.

	INITIAL	DATE			
Designed By	BPF	3-86	Checked By	DMJ	10-86
Checked By	DEK	4-86	Quantities By	BWH	1-87
Detailed By	HM	7-86	Checked By	EPK	9-86
				PAC	1-87

HOWARD NEEDLES TAMMEN & BERGENDOFF HNTB

DIVISION OF HIGHWAYS

FRENCH CREEK VIADUCT – I8WI
CONCRETE ALTERNATE

TRANSVERSE TENDON DETAILS

Designer B. Foree		Structure Numbers	F-08-AV (I8WI)
Detailer M. Poitra			
Drawing Number B-31	of 70	Drawings	

Revision Dates (Preliminary Stage Only)

LANMAN'S SUPPLY CO. 191182

STATE OF COLORADO
STATE DEPARTMENT OF HIGHWAYS
DIVISION OF HIGHWAYS
D. O. H. FORM NO. 117
REV. APR. 1986

AS CONSTRUCTED			
NO REVISIONS	REVISED	VOID 8-15-90	

FEDERAL ROAD REGION NO.	DIVISION	PROJECT NUMBER	SHEET NUMBER
VIII	COLORADO	I 70 - 2(134)	II - 34A

REVISIONS			
R-1	12-3-87	Entire Sheet	BWH
R-2	12-8-87	Anchorage Reinforcing Revision	DMJ

WEB POST-TENSIONING SCHEDULE

Segments to contain Vertical Web Post-tensioning Structure 18W3

Unit	Pier	Segment No.	Length	Dimension A	Dimension B	Dimension C
1	2	414	7'-9"	11 5/8"	3	1'-11 1/4"
	2	412				
	3	386				
	3	384	7'-9"	11 5/8"	3	1'-11 1/4"
	4	359	5'-4"	11"	2	1'-9"
	4	358				
	4	357				
	4	353				
	4	352				
	4	351	5'-4"	11"	2	1'-9"
	4	350	8'-0"	1'-0"	3	2'-0"
	5	329	8'-0"	1'-0"	3	2'-0"
	5	328	8'-0"	1'-0"	3	2'-0"
	5	327	5'-4"	11"	2	1'-9"
	5	326				
	5	325				
	5	321				
	5	320				
	5	319	5'-4"	11"	2	1'-9"
	5	318	8'-0"	1'-0"	3	2'-0"
	5	317	8'-0"	1'-0"	3	2'-0"
	6	297	8'-0"	1'-0"	3	2'-0"
	6	296	5'-4"	11"	2	1'-9"
	6	295				
	6	294				
	6	290				
1	6	289	5'-4"	11"	2	1'-9"
2	7	265	8'-0"	1'-0"	3	2'-0"
	7	264	5'-4"	11"	2	1'-9"
	7	263				
	7	262				
	7	258				
	7	257				
	7	256	5'-4"	11"	2	1'-9"
	7	255	8'-0"	1'-0"	3	2'-0"
	7	254				
	8	232				
	8	230				
	9	206				
	9	204				
	10	180				
	10	178				
	11	154				
2	11	152	8'-0"	1'-0"	3	2'-0"
3	12	127	7'-9"	11 5/8"	3	1'-11 1/4"
	12	125				
	13	99				
	13	97	7'-9"	11 5/8"	3	1'-11 1/4"
	14	72	8'-0"	1'-0"	3	2'-0"
	14	70				
	15	46				
	15	44				
	16	20				
3	16	18	8'-0"	1'-0"	3	2'-0"
2	11	155	8'-0"	1'-0"	3	2'-0"
2	11	151	8'-0"	1'-0"	3	3'-0"
1	6	287	8'-0"	1'-0"	3	2'-0"
2	7	267				
	7	266				
	7	253				
	9	208				
2	9	202	8'-0"	1'-0"	3	2'-0"

Segments to contain Vertical Web Post-tensioning Structure 18W1

Unit	Pier	Segment No.	Length	Dimension A	Dimension B	Dimension C
	2	160	7'-9"	11 5/8"	3	1'-11 1/4"
	2	158				
	3	132				
	3	130	7'-9"	11 5/8"	3	1'-11 1/4"
	4	105	8'-0"	1'-0"	3	2'-0"
	4	103				
	5	79				
	5	77	8'-0"	1'-0"	3	2'-0"
	6	53	5'-4"	11"	2	1'-9"
	6	52	5'-4"	11"	2	1'-9"
	6	49	3'-0"	6 1/2"	1	1'-11"
	6	48	5'-4"	11"	2	1'-9"
	6	47				
	7	24				
	7	23	5'-4"	11"	2	1'-9"
	7	20	4'-0"	6 1/2"	1	2'-11"
	7	19	5'-4"	11"	2	1'-9"
	2	157	7'-9"	11 5/8"	3	1'-11 1/4"
	2	161				
	3	133				
	3	129	7'-9"	11 5/8"	3	1'-11 1/4"

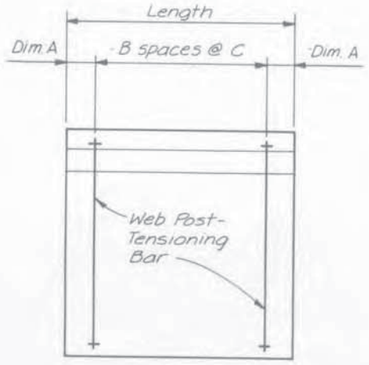

WEB ELEVATION

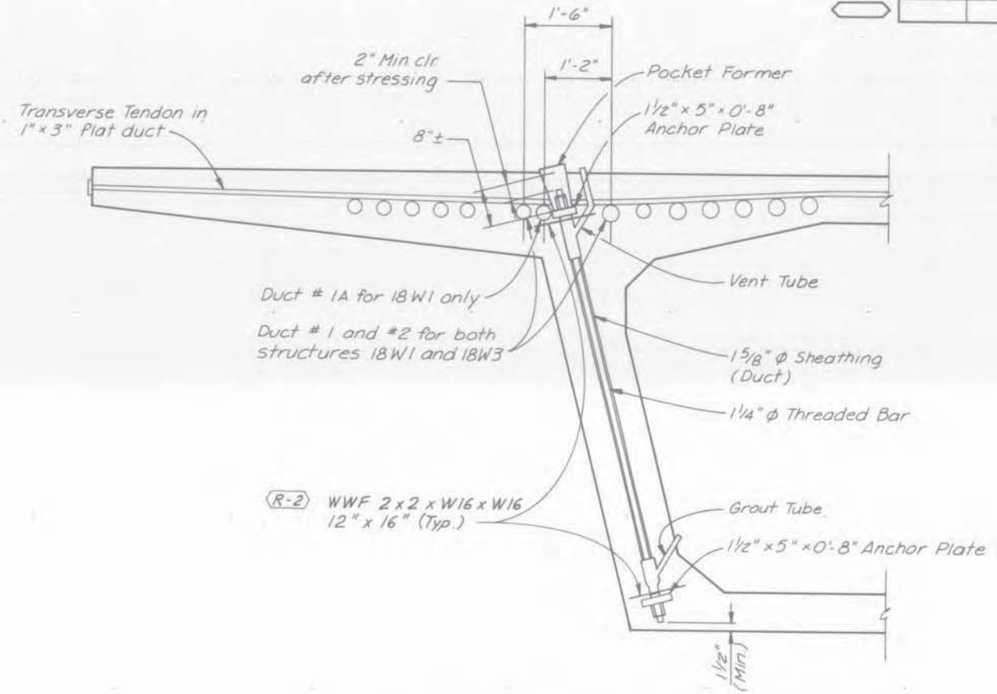

VERTICAL WEB POST-TENSIONING DETAIL

Vertical PT Bar Notes:

1. Post-tensioning bars to be 1 1/4" Diameter, Grade 150, High Strength Bar.
2. Jacking Force for 1 1/4" PT Bar = 154 Kips
3. Assumed Anchor Set 1/16"

HOWARD NEEDLES TAMMEN & BERGENDOFF HNTB

DIVISION OF HIGHWAYS

FRENCH CREEK VIADUCT - 18W1
CONCRETE ALTERNATE

WEB POST-TENSIONING

Designer D. Jones		Structure Numbers	F-08-AV
Detailer M. Poitra			F-08-BH
Drawing Number B-31A	of		Drawings

INITIAL	DATE	
Designed By		Checked By
Checked By		Quantities By
Detailed By		Checked By

Revision Dates (Preliminary Stage Only)

LARMAN'S SUPPLY CO 101183

STATE OF COLORADO
STATE DEPARTMENT OF HIGHWAYS
DIVISION OF HIGHWAYS
S. O. H. FORM NO. 137
REV. APR. 1988

AS CONSTRUCTED			
NO REVISIONS 8-15-90	REVISED		VOID

FEDERAL ROAD REGION NO.	DIVISION	PROJECT NUMBER	SHEET NUMBER
VIII	COLORADO	I 70 - 2(134)	II - 34B

REVISIONS DURING CONSTRUCTION			
CR-3	1-29-89	Post-Tensioning Schedule	CEM

REVISIONS			
R-1	11-24-87	Entire Sheet	BWH
R-2	12-8-87	Anchorage Reinforcing	DMJ

WEB POST-TENSIONING SCHEDULE

Segments to contain Vertical Web Post-tensioning Structure 18W3

Unit	Pier	Segment No.	Length	Dimension A	Dimension B	Dimension C
1	2	414	7'-9"	11 5/8"	3	1'-11 1/4"
	2	412				
	3	386				
	3	384	7'-9"	11 5/8"	3	1'-11 1/4"
	4	359	5'-4"	11"	2	1'-9"
	4	358				
	4	357				
	4	353				
	4	352				
	4	351	5'-4"	11"	2	1'-9"
	4	350	8'-0"	1'-0"	3	2'-0"
	5	329	8'-0"	1'-0"	3	2'-0"
	5	328	8'-0"	1'-0"	3	2'-0"
	5	327	5'-4"	11"	2	1'-9"
	5	326				
	5	325				
	5	321				
	5	320				
	5	319	5'-4"	11"	2	1'-9"
	5	318	8'-0"	1'-0"	3	2'-0"
	5	317	8'-0"	1'-0"	3	2'-0"
	6	297	8'-0"	1'-0"	3	2'-0"
	6	296	5'-4"	11"	2	1'-9"
	6	295				
	6	294				
	6	290				
1	6	289	5'-4"	11"	2	1'-9"
2	7	265	8'-0"	1'-0"	3	2'-0"
	7	264	5'-4"	11"	2	1'-9"
	7	263				
	7	262				
	7	258				
	7	257				
	7	256	5'-4"	11"	2	1'-9"
	7	255	8'-0"	1'-0"	3	2'-0"
	7	254				
	8	232				
	8	230				
	9	206				
	9	204				
	10	180				
	10	178				
	11	154				
2	11	152	8'-0"	1'-0"	3	2'-0"
3	12	127	7'-9"	11 5/8"	3	1'-11 1/4"
	12	125				
	13	99				
	13	97	7'-9"	11 5/8"	3	1'-11 1/4"
	14	72	8'-0"	1'-0"	3	2'-0"
	14	70				
	15	46				
	15	44				
	16	20				
3	16	18	8'-0"	1'-0"	3	2'-0"
2	11	155	8'-0"	1'-0"	3	2'-0"
2	11	151	8'-0"	1'-0"	3	3'-0"
1	6	287	8'-0"	1'-0"	3	2'-0"
2	7	267				
	7	266				
	7	253				
	9	208				
2	9	202	8'-0"	1'-0"	3	2'-0"

Segments to contain Vertical Web Post-tensioning Structure 18W1

Unit	Pier	Segment No.	Length	Dimension A	Dimension B	Dimension C
	2	160	7'-9"	11 5/8"	3	1'-11 1/4"
	2	158				
	3	132				
	3	130	7'-9"	11 5/8"	3	1'-11 1/4"
	4	105	8'-0"	1'-0"	3	2'-0"
	4	103				
	5	79				
	5	77	8'-0"	1'-0"	3	2'-0"
	6	50	8'-0"	1'-3"	2	2'-9"
	6	49		9"	4	1'-6"
	6	46		9"	4	1'-6"
	6	45		1'-3"	2	2'-9"
	7	23		1'-3"	2	2'-9"
	7	22		9"	4	1'-6"
	7	19		9"	4	1'-6"
	7	18	8'-0"	1'-3"	2	2'-9"
	2	157	7'-9"	11 5/8"	3	1'-11 1/4"
	2	161				
	3	133				
	3	129	7'-9"	11 5/8"	3	1'-11 1/4"

CR-3

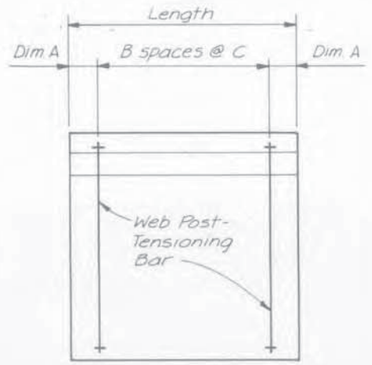

WEB ELEVATION

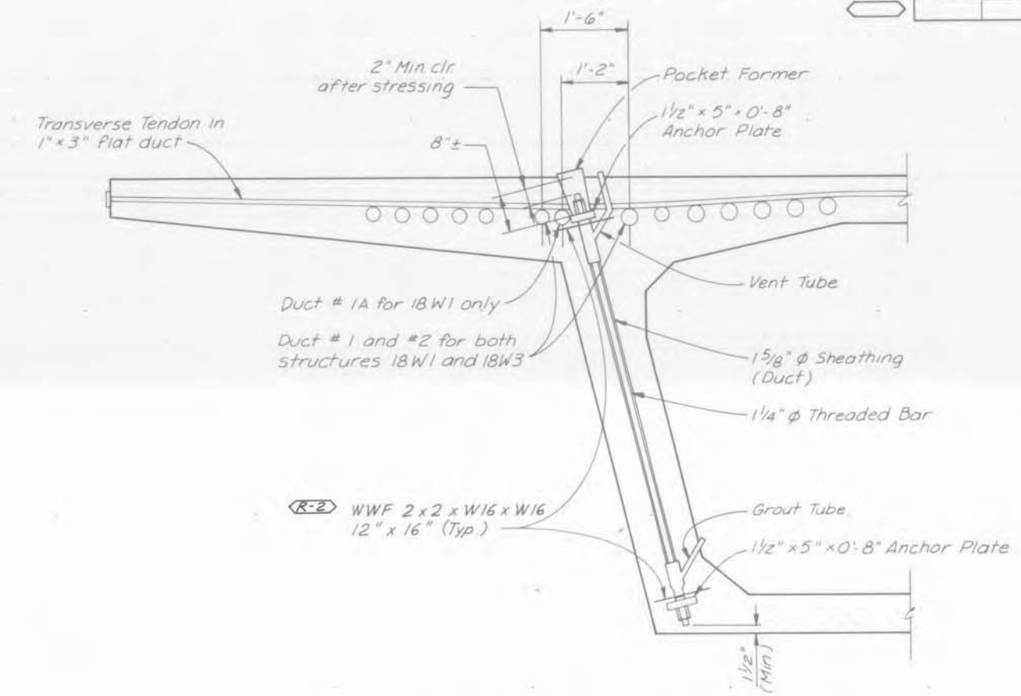

VERTICAL WEB POST-TENSIONING DETAIL

Vertical PT Bar Notes:

1. Post-tensioning bars to be 1 1/4" Diameter, Grade 150, High Strength Bar.
2. Jacking Force for 1 1/4" PT Bar = 154 Kips
3. Assumed Anchor Set 1/16"

CR-3 Note: Revisions due to changes in Contractor's erection scheme.

HOWARD NEEDLES TAMMEN & BERGENDOFF HNTB

DIVISION OF HIGHWAYS

FRENCH CREEK VIADUCT - 18W1
CONCRETE ALTERNATE

WEB POST-TENSIONING

Designer D. Jones		Structure Numbers	F-08-AV
Detailer M. Poitra			
Drawing Number B-31B	of		Drawings

Revision Dates (Preliminary Stage Only)

INITIAL	DATE	
Designed By		
Checked By		
Detailed By		
Checked By		
Quantities By		
Checked By		

LANMAN'S SUPPLY CO. 101183

STATE OF COLORADO
STATE DEPARTMENT OF HIGHWAYS
DIVISION OF HIGHWAYS
D. O. H. FORM NO. 117
REV. APR. 1986

AS CONSTRUCTED			
NO REVISIONS		REVISED 8-15-90	VOID

FEDERAL ROAD REGION NO.	DIVISION	PROJECT NUMBER	SHEET NUMBER
VIII	COLORADO	170-2 (134)	II-46A

REVISIONS		
R-1	11-25-89 Relocate 1A Duct	DMJ

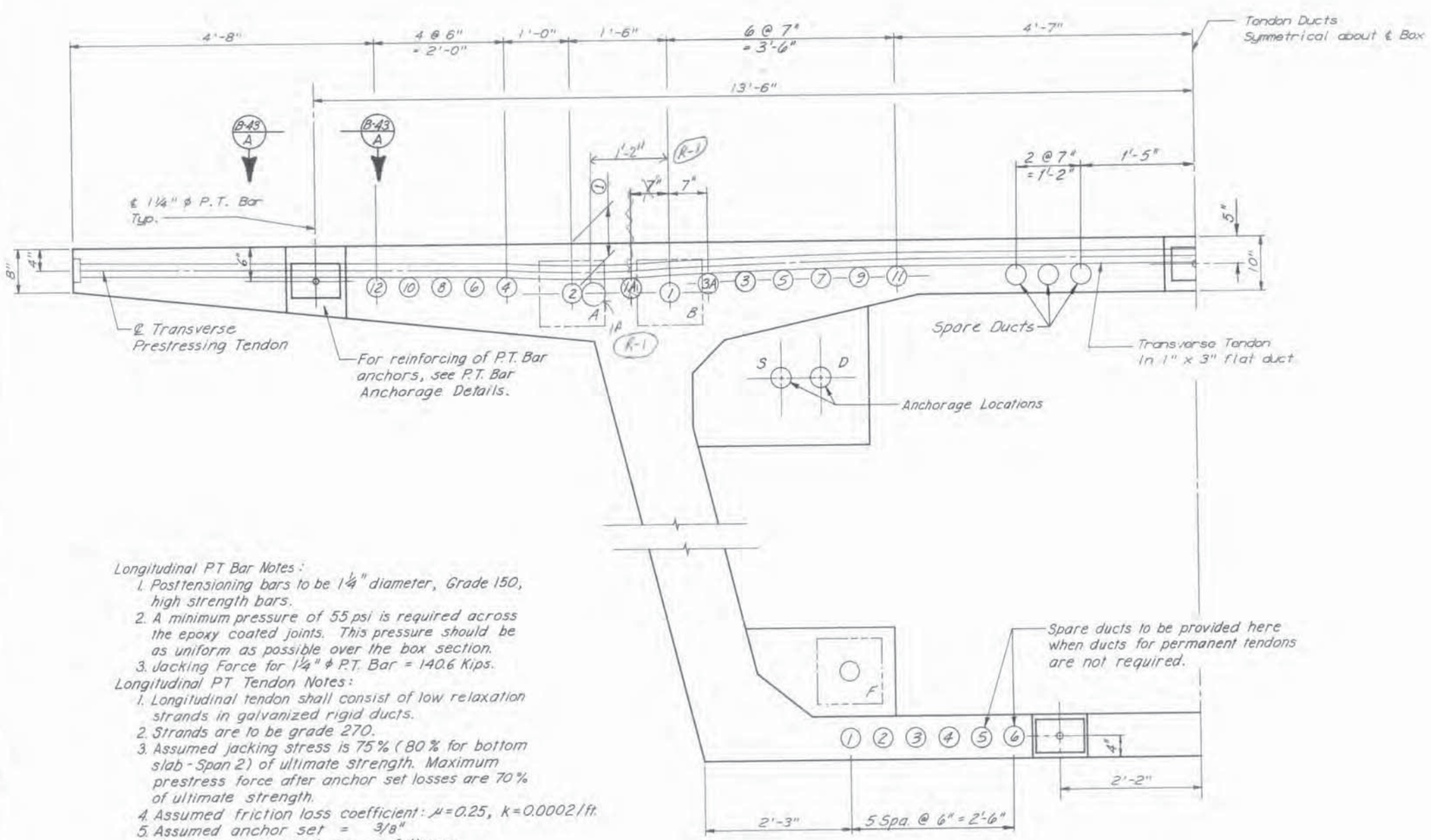

END ELEVATION SECTION

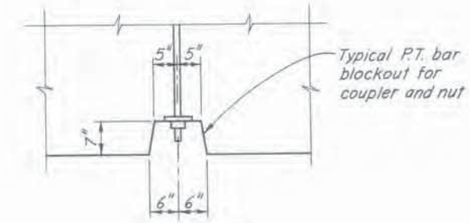

VIEW B-43 A

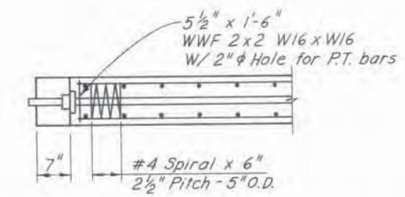

P.T. BAR ANCHORAGE DETAIL

Longitudinal PT Bar Notes:
1. Posttensioning bars to be 1¼" diameter, Grade 150, high strength bars.
2. A minimum pressure of 55 psi is required across the epoxy coated joints. This pressure should be as uniform as possible over the box section.
3. Jacking Force for 1¼" ϕ P.T. Bar = 140.6 Kips.

Longitudinal PT Tendon Notes:
1. Longitudinal tendon shall consist of low relaxation strands in galvanized rigid ducts.
2. Strands are to be grade 270.
3. Assumed jacking stress is 75% (80% for bottom slab - Span 2) of ultimate strength. Maximum prestress force after anchor set losses are 70% of ultimate strength.
4. Assumed friction loss coefficient: $\mu = 0.25$, $k = 0.0002/ft.$
5. Assumed anchor set = 3/8"
6. Duct sizes assumed are as follows:
   Top slab tendons -
   1, 3, 5, 7, 9 & 11 - 4.31 O.D.
   1A, 2, 3A, 4, 6, 8, 10 & 12 - 3.56 O.D.
   Bottom slab tendons -
   all - 3.56 O.D.
7. Longitudinal tendon ducts in the top slab shall be placed below and in contact with transverse tendons. See Dwg. No. B-31 for details.

Notes:
Barrier and Asphaltic Concrete wearing surface not shown in section.

The number of tendons at bent and midspan locations may vary. See the Post-Tensioning Layout drawings for the proper number of tendons to be placed.
As tendons are anchored the remaining tendons shall be tapered toward the anchor point as shown on the Post-Tensioning Layout drawings.

	INITIAL	DATE			
Designed By	BPF	7-86	Checked By	DMJ	9-86
Checked By	BBD	10-86	Quantities By	BWH	1-87
Detailed By	HCM	8-86	Checked By	EPK	9-86
				PAC	1-87

HOWARD NEEDLES TAMMEN & BERGENDOFF HNTB

DIVISION OF HIGHWAYS

FRENCH CREEK VIADUCT - 18W1
CONCRETE ALTERNATE

TENDON LOCATION

Designer B. Foree	Structure Numbers	F-08-AV (18W1)
Detailer H. Madison		
Drawing Number B-43A of 70 Drawings		

Revision Dates (Preliminary Stage Only)

LANMAN'S SUPPLY CO.

STATE OF COLORADO
STATE DEPARTMENT OF HIGHWAYS
DIVISION OF HIGHWAYS
D. O. H. FORM NO. 117
REV. APR. 1986

AS CONSTRUCTED			
NO REVISIONS 8-15-90	REVISED		VOID

FEDERAL ROAD REGION NO.	DIVISION	PROJECT NUMBER	SHEET NUMBER
VIII	COLORADO	I 70 - 2 (134)	II - 48

REVISIONS		

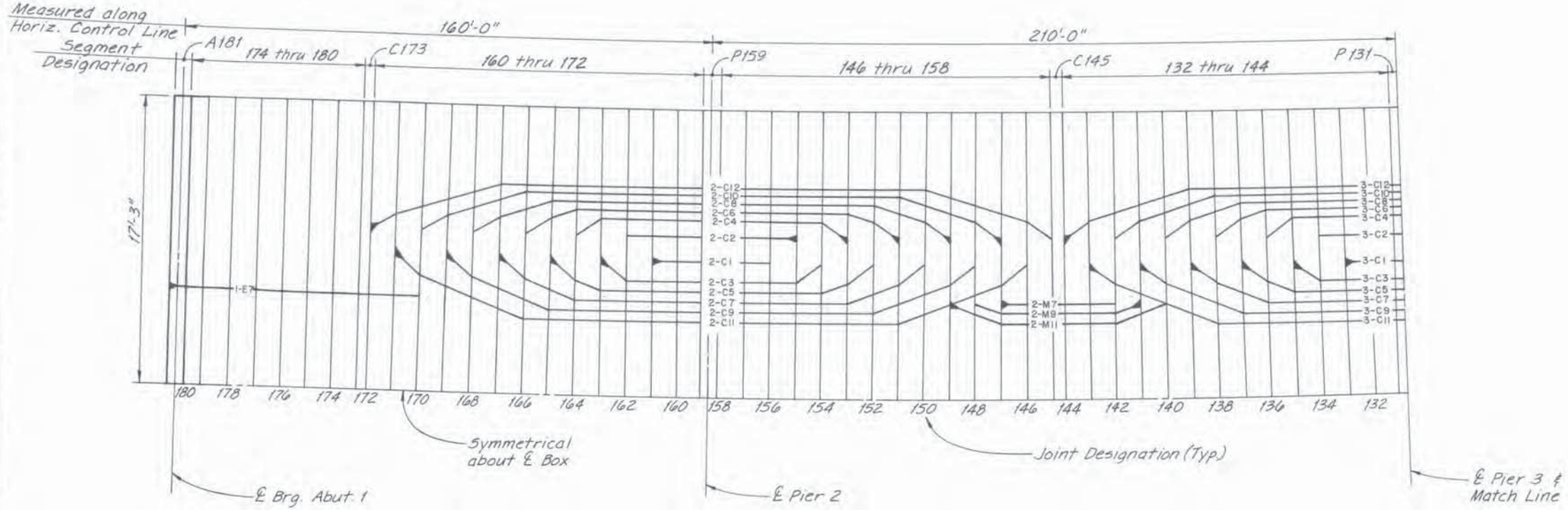

Denotes stressing end of tendon.

TOP SLAB TENDON LAYOUT

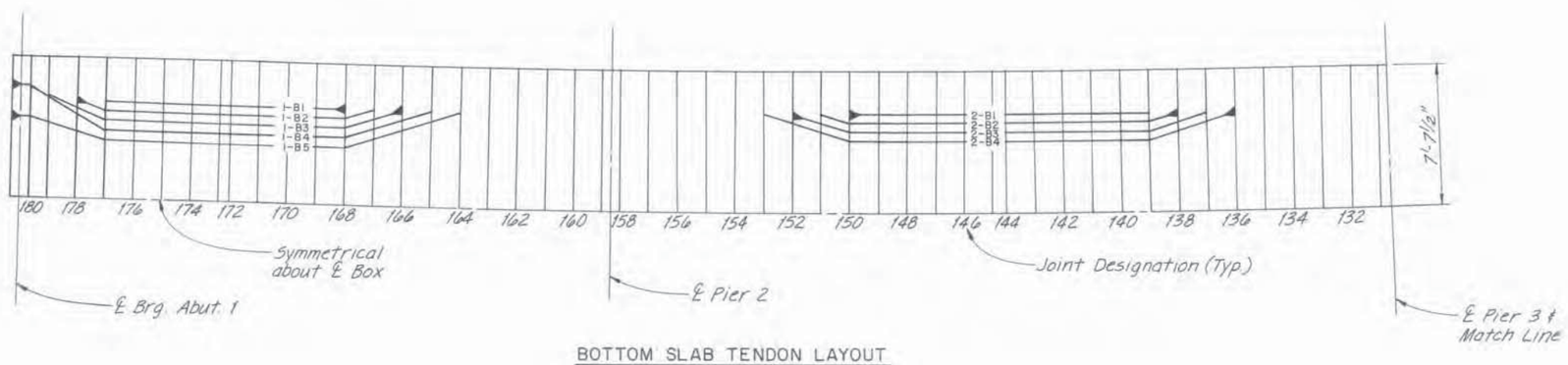

BOTTOM SLAB TENDON LAYOUT

	INITIAL	DATE		INITIAL	DATE
Designed By	DMJ	9-86	Checked By	DMJ	9-86
Checked By	BBD	10-86	Quantities By	BWH	1-87
Detailed By	CEM	9-86	Checked By	EPK	9-86
				PAC	1-87

HOWARD NEEDLES TAMMEN & BERGENDOFF HNTB

DIVISION OF HIGHWAYS

FRENCH CREEK VIADUCT - I8WI
CONCRETE ALTERNATE

POST-TENSIONING LAYOUT
ABUTMENT I TO PIER 3

Designer D. Jones		Structure Numbers	F-08-AV (I8WI)
Detailer C. Meyers			
Drawing Number B-45	of 70	Drawings	

Revision Dates (Preliminary Stage Only)

LANMAN'S SUPPLY CO. 191102

STATE OF COLORADO
STATE DEPARTMENT OF HIGHWAYS
DIVISION OF HIGHWAYS
D. O. H. FORM NO. 117
REV. APR. 1986

AS CONSTRUCTED			
NO REVISIONS 8-15-90	REVISED		VOID

FEDERAL ROAD REGION NO.	DIVISION	PROJECT NUMBER	SHEET NUMBER
VIII	COLORADO	170 - 2(134)	II-49

REVISIONS

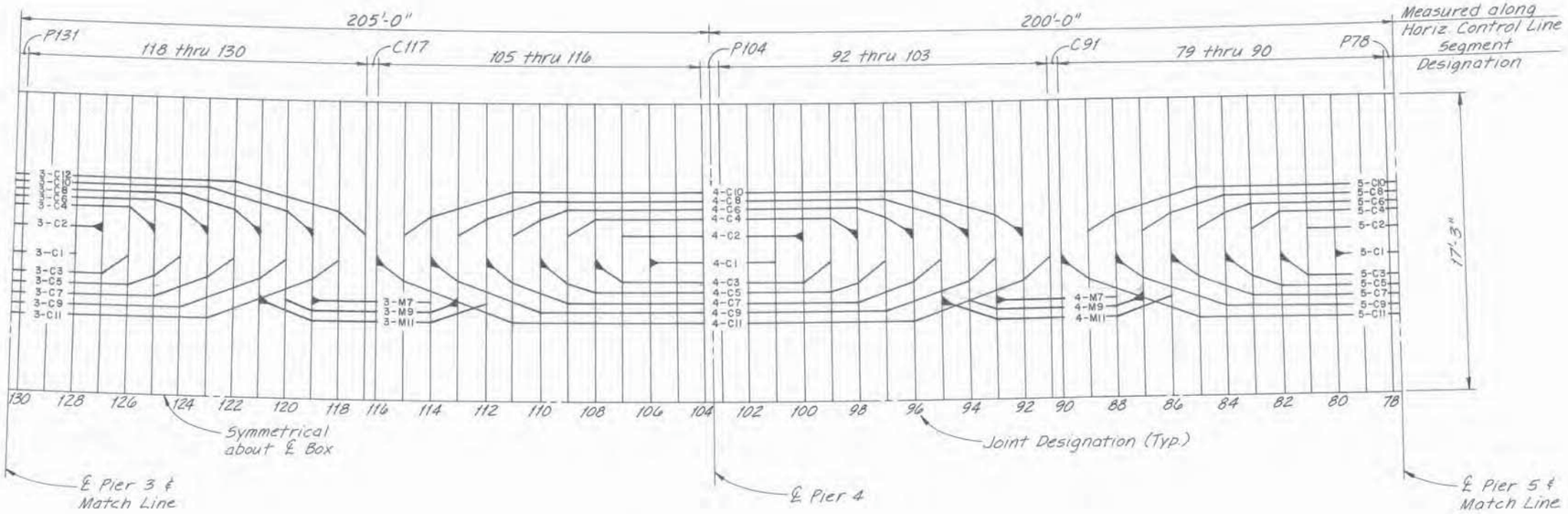

TOP SLAB TENDON LAYOUT

Denotes stressing end of tendon.

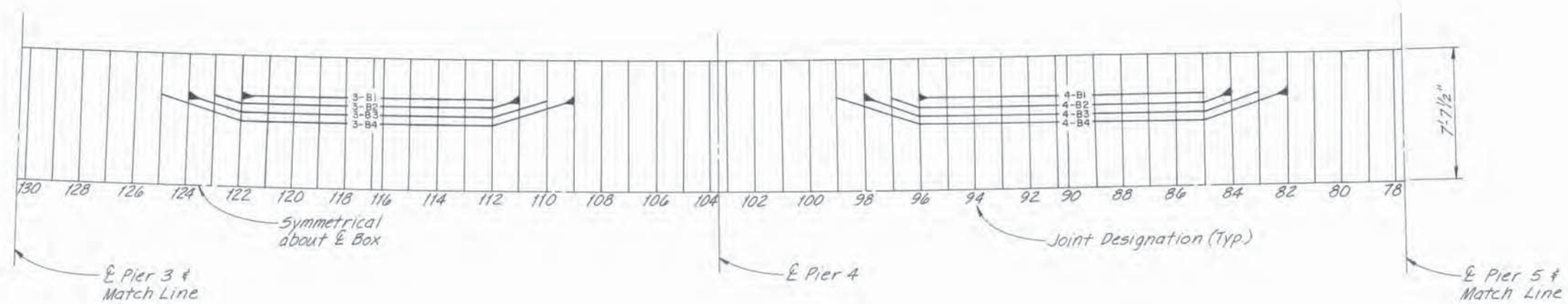

BOTTOM SLAB TENDON LAYOUT

	INITIAL	DATE			
Designed By	DMJ	9-86	Checked By	DMJ	9-86
Checked By	BBD	10-86	Quantities By	BWH	1-87
Detailed By	CEM	9-86	Checked By	EPK	9-86
				PAC	1-87

HOWARD NEEDLES TAMMEN & BERGENDOFF HNTB

DIVISION OF HIGHWAYS

FRENCH CREEK VIADUCT - 18W1
CONCRETE ALTERNATE
POST-TENSIONING LAYOUT
PIER 3 TO PIER 5

Designer D. Jones	Structure	F-08-AV	
Detailer C. Meyers	Numbers	(18W1)	
Drawing Number B-46	of 70	Drawings	

Revision Dates (Preliminary Stage Only)

LANMAN'S SUPPLY CO. 100165

STATE OF COLORADO
STATE DEPARTMENT OF HIGHWAYS
DIVISION OF HIGHWAYS
D. O. H. FORM NO. 137
REV. APR. 1986

AS CONSTRUCTED		
NO REVISIONS	REVISED	VOID 8-15-90

FEDERAL ROAD REGION NO.	DIVISION	PROJECT NUMBER	SHEET NUMBER
VIII	COLORADO	I 70 - 2(134)	II-50

REVISIONS		
CR-1 7-20-89	Revised Post-Tensioning Layout	CEM

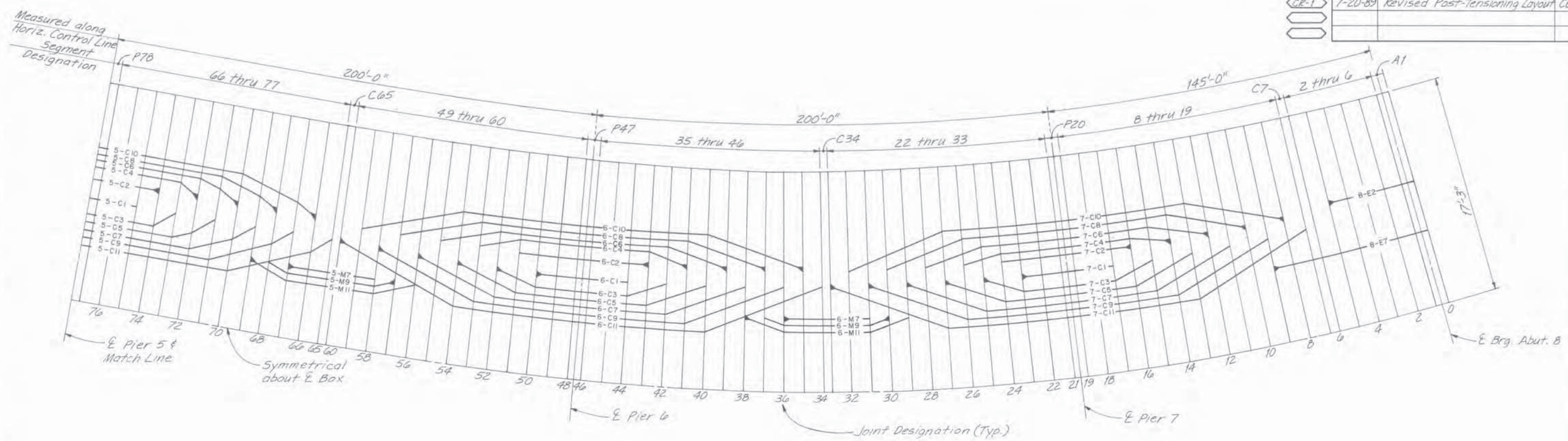

TOP SLAB TENDON LAYOUT

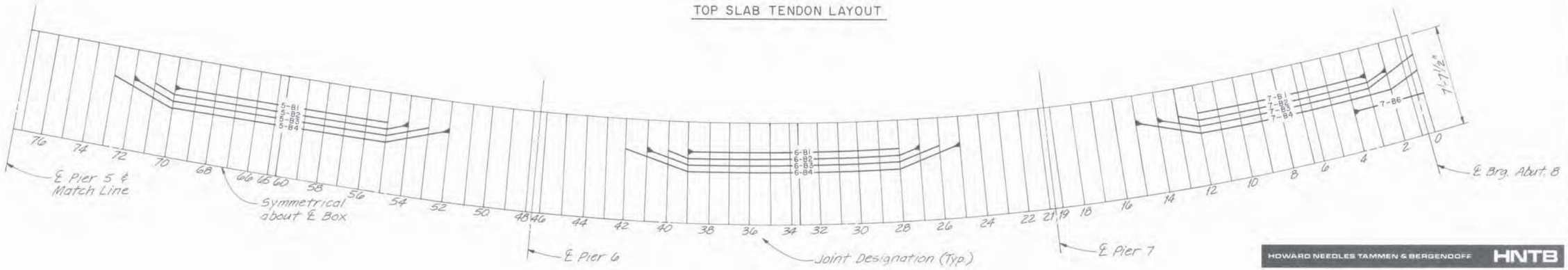

BOTTOM SLAB TENDON LAYOUT

Denotes stressing end of tendon.

Designed By	INITIAL	DATE	Checked By
Checked By			Quantities By
Detailed By			Checked By

HOWARD NEEDLES TAMMEN & BERGENDOFF HNTB

DIVISION OF HIGHWAYS

FRENCH CREEK VIADUCT - I8WI
CONCRETE ALTERNATE

POST-TENSIONING LAYOUT
PIER 5 TO ABUTMENT 8

Designer D. Jones	Structure Numbers	F-08-AV (I8WI)
Detailer C. Meyers		
Drawing Number B-47B of 70 Drawings		

Revision Dates	(Preliminary Stage Only)

LAMMAS SUPPLY CO. 101183

STATE OF COLORADO
STATE DEPARTMENT OF HIGHWAYS
DIVISION OF HIGHWAYS:
D. O. N. FORM NO. 117:
REV. APR. 1986

AS CONSTRUCTED		
NO REVISIONS 8-15-90	REVISED	VOID

FEDERAL ROAD REGION NO.	DIVISION	PROJECT NUMBER	SHEET NUMBER
VIII	COLORADO	I 70 - 2(134)	II-50 A

REVISIONS			
R-1	11-25-89	Relocated 7-C1A	DMJ
CR-2	5-18-89	Tendon and Joint No. Revision	MLP

	INITIAL	DATE		
Designed By	DMJ	9-86	Checked By	DMJ 9-86
Checked By	BBD	10-86	Quantities By	BWH 1-87
Detailed By	CEM	9-86	Checked By	EPK 9-86
				PAC 1-87

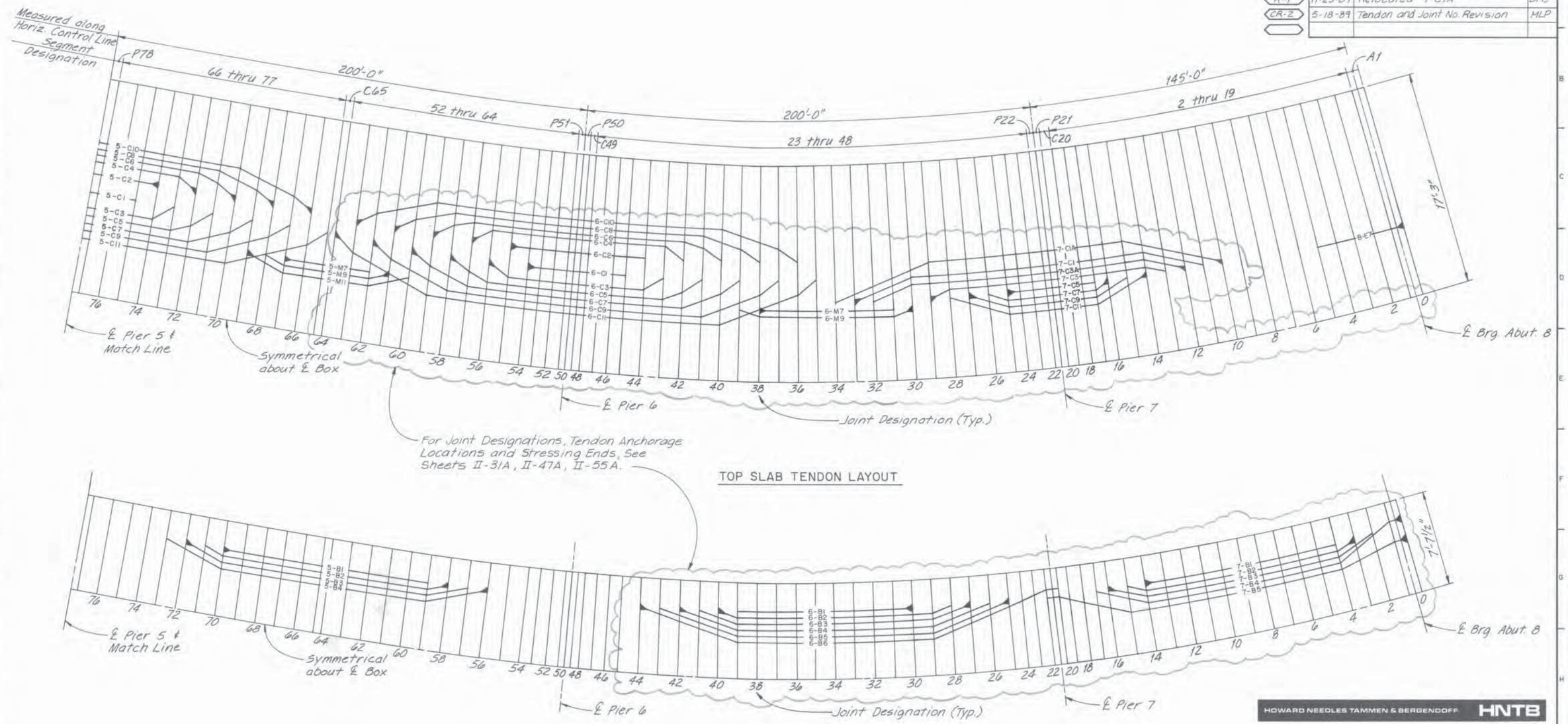

TOP SLAB TENDON LAYOUT

BOTTOM SLAB TENDON LAYOUT

Denotes stressing end of tendon.

HOWARD NEEDLES TAMMEN & BERGENDOFF HNTB

DIVISION OF HIGHWAYS

FRENCH CREEK VIADUCT – I8WI
CONCRETE ALTERNATE
POST-TENSIONING LAYOUT
PIER 5 TO ABUTMENT 8

Designer D. Jones		Structure Numbers	F-08-AV (I8WI)
Detailer C. Meyers			
Drawing Number B-47A of 70 Drawings			

Revision Dates (Preliminary Stage Only)

LANMAN'S SUPPLY CO. 191182

STATE OF COLORADO
STATE DEPARTMENT OF HIGHWAYS
DIVISION OF HIGHWAYS:
D. O. H. FORM NO. 117:
REV. APR. 1986

AS CONSTRUCTED		
NO REVISIONS 8-15-90	REVISED	VOID

FEDERAL ROAD REGION NO.	DIVISION	PROJECT NUMBER	SHEET NUMBER
VIII	COLORADO	I 70-2(134)	II-51

REVISIONS

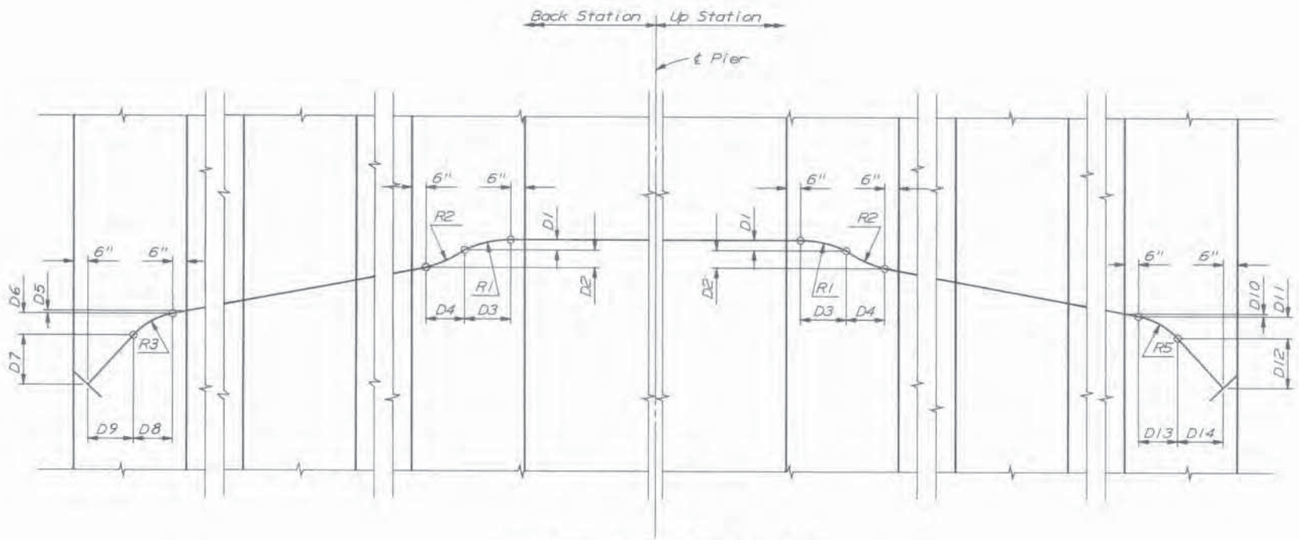

CANTILEVER TENDON LAYOUT

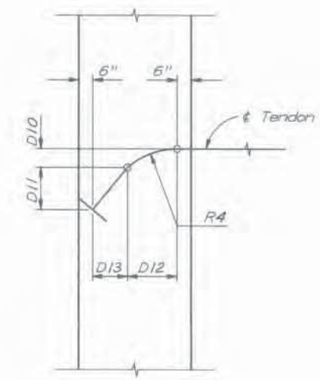

CANTILEVER TENDON LAYOUT

Back Station Layout shown, Up Station Layout opposite hand.

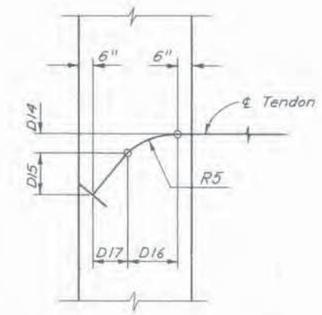

MIDSPAN TENDON LAYOUT
TENDON NO. 9

Back Station Layout shown, Up Station Layout opposite hand.

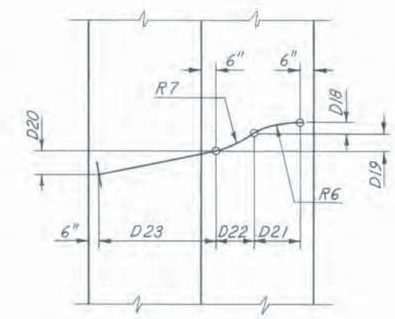

MIDSPAN TENDON LAYOUT
TENDON NO. 11

Back Station Layout shown, Up Station Layout opposite hand.

CANTILEVER TENDON GEOMETRY
PIERS 2 & 3
(BACK STATION & UP STATION)

DIM.	TENDON NO. 3	4	5, 7, 9, & 11	6, 8, 10, & 12
D1	—	—	3"	3 7/16"
D2	—	—	3 9/16"	2 3/16"
D3	—	—	3'-10 3/8"	4'-9 3/16"
D4	—	—	2'-10 11/16"	1'-11 7/8"
D5	—	—	7/16"	3/8"
D6	—	—	4 7/16"	7"
D7	—	—	9 1/8"	4 3/8"
D8	—	—	2'-2 3/8"	4'-7 7/8"
D9	—	—	4'-6 5/8"	2'-1 1/8"
D10	3 1/8"	4 3/8"	—	—
D11	10 7/8"	7 5/8"	—	—
D12	2'-5 15/16"	3'-7 5/8"	—	—
D13	4'-3 1/16"	3'-1 3/8"	—	—
R1	—	—	30'-0"	40'-0"
R2	—	—	53'-9 3/8"	36'-4 1/16"
R3	—	—	20'-6 1/16"	39'-6 3/16"
R4	11'-11 13/16"	18'-2 11/16"	—	—

CANTILEVER TENDON GEOMETRY
PIERS 4, 5, 6 & 7
(BACK STATION & UP STATION)

DIM.	TENDON NO. 3	4	5, 7, 9, & 11	6, 8, & 10
D1	—	—	2 5/8"	2 15/16"
D2	—	—	3 15/16"	2 11/16"
D3	—	—	3'-7 5/16"	4'-5"
D4	—	—	3'-4 11/16"	2'-7"
D5	—	—	7/16"	3/8"
D6	—	—	6"	7 7/8"
D7	—	—	7 9/16"	3 3/4"
D8	—	—	3'-9 1/8"	5'-3 3/4"
D9	—	—	3'-2 7/8"	1'-8 1/4"
D10	3 3/4"	5"	—	—
D11	10 1/4"	7"	—	—
D12	2'-11 13/16"	4'-1 9/16"	—	—
D13	4'-0 3/16"	2'-10 7/16"	—	—
R1	—	—	30'-0"	40'-0"
R2	—	—	71'-3 3/8"	53'-9 1/8"
R3	—	—	31'-10 1/4"	44'-3 15/16"
R4	14'-4 3/8"	20'-8 1/2"	—	—

MIDSPAN TENDON GEOMETRY
SPAN 2 (BACKSTATION AND UPSTATION); SPAN 3 (BACKSTA.)

DIM.	TENDON NO. 9	11
D14	2 1/4"	—
D15	4 3/4"	—
D16	3'-3"	—
D17	3'-6"	—
D18	—	2 3/4"
D19	—	3 3/4"
D20	—	7 1/2"
D21	—	3'-8 5/8"
D22	—	3'-0 3/8"
D23	—	7'-9"
R5	28'-9"	—
R6	—	30'-0"
R7	—	69'-4 15/16"

MIDSPAN TENDON GEOMETRY
SPAN 3 (UPSTATION) AND SPANS 4, 5, & 6 (BACKSTA. & UPSTA.)

DIM.	TENDON NO. 9	11
D14	2 9/16"	—
D15	4 7/16"	—
D16	3'-9"	—
D17	3'-3"	—
D18	—	2 7/16"
D19	—	4 1/8"
D20	—	7 7/16"
D21	—	3'-5 5/8"
D22	—	3'-6 3/8"
D23	—	8'-0"
R5	33'-2"	—
R6	—	30'-0"
R7	—	93'-0 13/16"

	INITIAL	DATE		INITIAL	DATE
Designed By	EPK	10-86	Checked By	EPK	10-86
Checked By	BWH	9-86	Quantities By	BWH	1-87
Detailed By	PAC	9-86	Checked By	PAC	1-87

HOWARD NEEDLES TAMMEN & BERGENDOFF HNTB

DIVISION OF HIGHWAYS

FRENCH CREEK VIADUCT-18W1
CONCRETE ALTERNATE

TOP SLAB TENDON
HORIZONTAL GEOMETRY

Designer E. Kollar	Structure Numbers	F-08-AV (18W1)
Detailer P. Carberry		
Drawing Number B-48 of 70 Drawings		

Revision Dates (Preliminary Stage Only)

LAWMAN'S SUPPLY CO. 101188

STATE OF COLORADO
STATE DEPARTMENT OF HIGHWAYS
DIVISION OF HIGHWAYS:
C. D. H. FORM NO. 117:
REV. APR. 1986

AS CONSTRUCTED			
NO REVISIONS 8-15-90	REVISED		VOID

FEDERAL ROAD REGION NO.	DIVISION	PROJECT NUMBER	SHEET NUMBER
VIII	COLORADO	I 70 - 2(134)	II-52

REVISIONS		

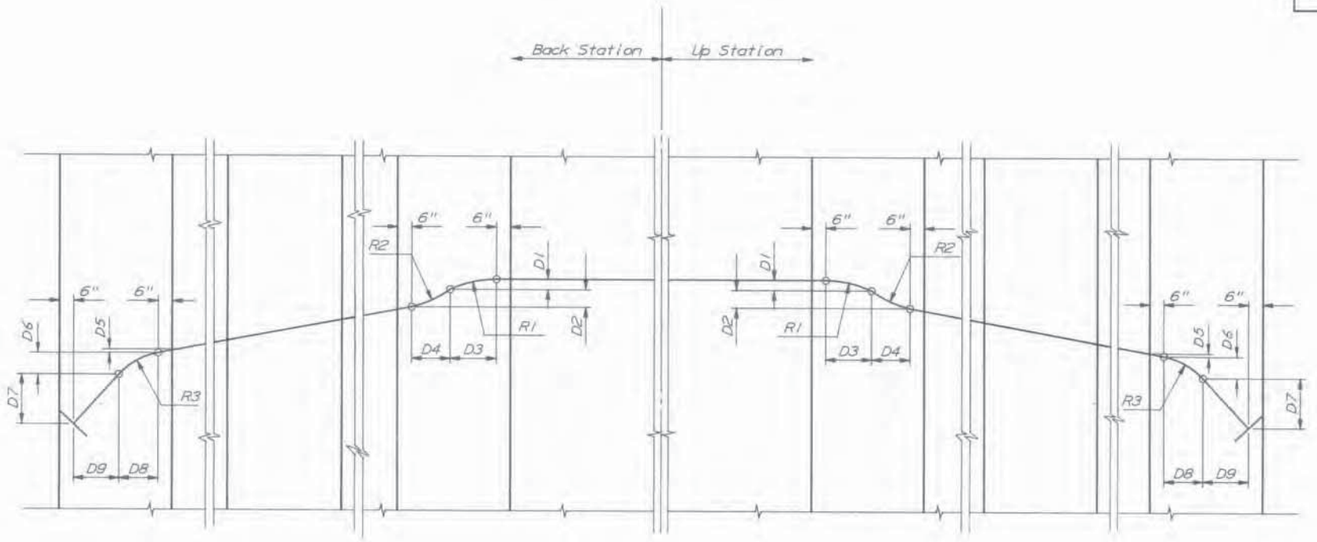

TENDON LAYOUT

For all Bottom Slab (B) Tendons unless otherwise noted.

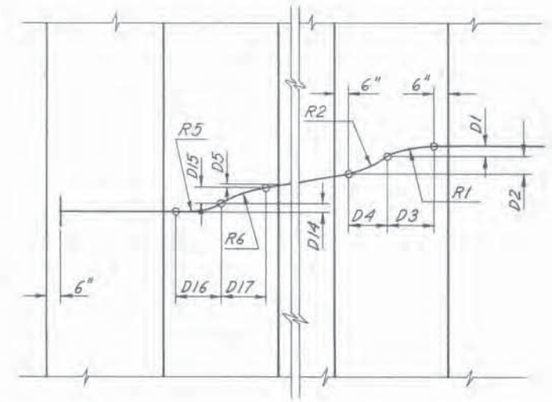

TENDON LAYOUT

For Tendons 1-B4 & 1-B5 @ Abut. 1, Tendons 7-B4 & 7-B5 @ Abut. 7, and Tendons 6-B6 & 7-B5 @ Pier 6.

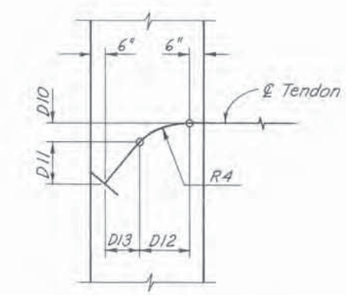

TENDON LAYOUT - ALL B2 TENDONS

TENDON GEOMETRY

DIM.	BACK STATION SPAN NO.										UP STATION SPAN NO.							
	1,2,3	1	1	1	2,3	4,5,6,7	4,5,6	7	7	7	1,2		3,4,5,6,7	3,4,5,6	6	7	7	7
	TENDON NO.	TENDON NO.	TENDON NO.	TENDON NO.	TENDON NO.	TENDON NO.	TENDON NO.	TENDON NO.	TENDON NO.	TENDON NO.	TENDON NO.		TENDON NO.	TENDON NO.	TENDON NO.	TENDON NO.	TENDON NO.	TENDON NO.
	2	3	4	5	3,4	2	3,4,5,6	3	4	5	2	3,4,5	2	3,4,5	6	3	4	5
D1	—	3 7/16"	4 3/4"	2 3/16"	3 7/16"	—	2 15/16"	2 15/16"	2 15/16"	3 3/8"	—	3 7/16"	—	2 15/16"	3"	2 15/16"	4 1/4"	1 3/8"
D2	—	2 3/16"	4 7/8"	2 11/16"	2 3/16"	—	2 11/16"	2 11/16"	2 11/16"	3 1/2"	—	2 3/16"	—	2 11/16"	3 1/16"	2 11/16"	4 1/8"	1 7/16"
D3	—	4'-9 3/16"	4'-9 3/16"	4'-9 3/16"	4'-9 3/16"	—	4'-5"	4'-5"	4'-5"	4'-5"	—	4'-9 3/16"	—	4'-5"	4'-5"	4'-5"	4'-5"	4'-5"
D4	—	1'-11 13/16"	1'-11 13/16"	1'-11 13/16"	1'-11 13/16"	—	2'-7"	2'-7"	2'-7"	2'-7"	—	1'-11 13/16"	—	2'-7"	2'-7"	2'-7"	2'-7"	2'-7"
D5	—	3/8"	5/8"	3/8"	3/8"	—	3/8"	3/8"	3/8"	7/16"	—	3/8"	—	3/8"	7/16"	3/8	5/8"	3/16"
D6	—	1 5/16"	—	—	1 5/16"	—	1 5/8"	1 5/8"	1 3/4"	—	—	1 5/16"	—	1 5/8"	—	1 5/8"	—	—
D7	—	4 5/16"	—	—	4 5/16"	—	4"	4"	3 7/8"	—	—	4 5/16"	—	4"	—	4"	—	—
D8	—	1'-6 15/16"	—	—	1'-6 15/16"	—	1'-4 5/16"	1'-4 5/16"	1'-6 7/8"	—	—	1'-6 15/16"	—	1'-4 5/16"	—	1'-4 5/16"	—	—
D9	—	5'-2 1/16"	—	—	5'-2 1/16"	—	5'-7 11/16"	5'-7 11/16"	2'-9 1/8"	—	—	5'-2 1/16"	—	5'-7 11/16"	—	5'-7 11/16"	—	—
D10	1 1/16"	—	—	—	—	1 3/8"	—	—	—	—	1 1/16"	—	1 3/8"	—	—	—	—	—
D11	4 15/16"	—	—	—	—	4 3/8"	—	—	—	—	4 15/16"	—	4 3/8"	—	—	—	—	—
D12	2'-0 13/16"	—	—	—	—	2'-6 3/4"	—	—	—	—	2'-0 13/16"	—	2'-6 3/4"	—	—	—	—	—
D13	4'-8 3/16"	—	—	—	—	4'-5 1/4"	—	—	—	—	4'-8 3/16"	—	4'-5 1/4"	—	—	—	—	—
D14	—	—	2 15/16"	1 9/16"	—	—	—	—	—	2"	—	—	—	—	2"	—	4 1/4"	1 3/8"
D15	—	—	3 1/16"	1 11/16"	—	—	—	—	—	2 1/8"	—	—	—	—	1 15/16"	—	4 1/8"	1 7/16"
D16	—	—	2'-8"	2'-8"	—	—	—	—	—	2'-0"	—	—	—	—	2'-0"	—	4'-5"	4'-5"
D17	—	—	1'-4"	1'-4"	—	—	—	—	—	2'-4"	—	—	—	—	2'-4"	—	2'-7"	2'-7"
R1	—	40'-0"	40'-0"	40'-0"	40'-0"	—	40'-0"	40'-0"	40'-0"	40'-0"	—	40'-0"	—	40'-0"	40'-0"	40'-0"	40'-0"	40'-0"
R2	—	36'-4 1/16"	53'-2 9/16"	54'-7 1/2"	36'-4 1/16"	—	53'-9 1/8"	53'-9 1/8"	53'-9 1/8"	55'-6 3/8"	—	36'-4 1/16"	—	53'-9 1/8"	54'-7 1/2"	53'-9 1/8"	53'-9 1/8"	54'-9 3/8"
R3	—	293'-7 3/8"	—	—	293'-7 3/8"	—	276'-2 3/8"	276'-2 3/8"	28'-7 1/16"	—	—	293'-7 3/8"	—	276'-2 3/8"	—	276'-2 3/8"	—	—
R4	23'-8 1/2"	—	—	—	—	29'-5 3/16"	—	—	—	—	23'-8 1/2"	—	29'-5 3/16"	—	—	—	—	—
R5	—	—	30'-0"	30'-0"	—	—	—	—	—	30'-0"	—	—	—	—	30'-0"	—	40'-0"	40'-0"
R6	—	—	26'-6 15/16"	27'-4 7/16"	—	—	—	—	—	26'-8 7/8"	—	—	—	—	27'-8 3/4"	—	53'-9 1/8"	54'-9 3/8"

	INITIAL	DATE		INITIAL	DATE
Designed By	EPK	9-86	Checked By	EPK	10-86
Checked By	BWH	10-86	Quantities By	BWH	1-87
Detailed By	PAC	9-86	Checked By	EPK	9-86
				PAC	1-87

HOWARD NEEDLES TAMMEN & BERGENDOFF HNTB

DIVISION OF HIGHWAYS

FRENCH CREEK VIADUCT - I8WI
CONCRETE ALTERNATE

BOTTOM SLAB TENDON
HORIZONTAL GEOMETRY

Designer E. Kollar	Structure	F-08-AV
Detailer P. Carberry	Numbers	(I8WI)
Drawing Number B-49 of 70 Drawings		

Revision Dates (Preliminary Stage Only)

LAMMAN'S SUPPLY CO. 101183

STATE OF COLORADO
STATE DEPARTMENT OF HIGHWAYS
DIVISION OF HIGHWAYS
D. O. H. FORM NO. 117
REV. APR. 1986

AS CONSTRUCTED		
NO REVISIONS 5-15-90	REVISED	VOID

FEDERAL ROAD REGION NO.	DIVISION	PROJECT NUMBER	SHEET NUMBER
VIII	COLORADO	170-2(134)	II-52

REVISIONS		

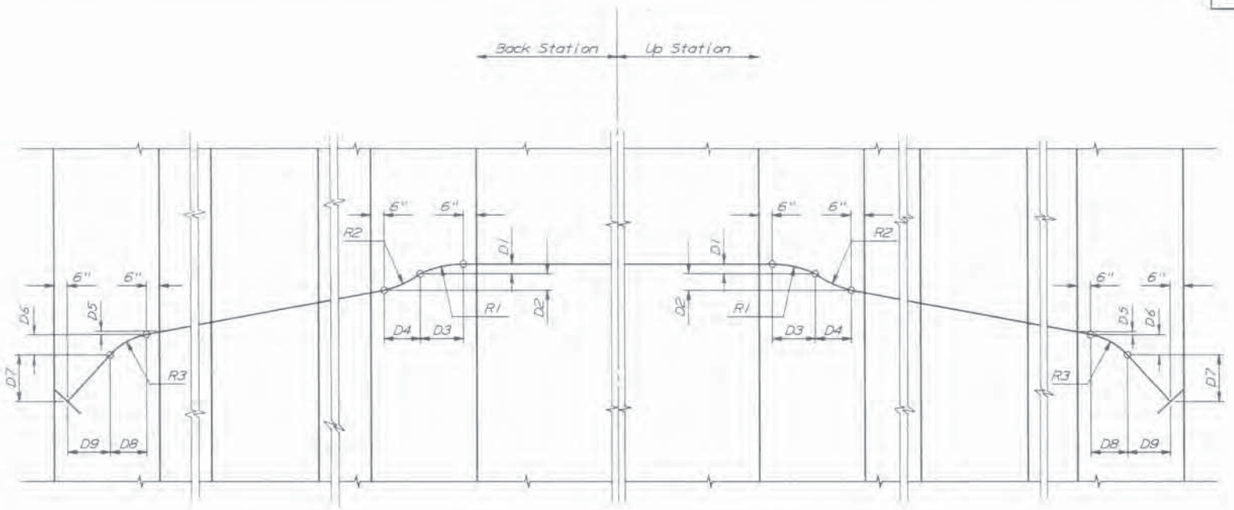

TENDON LAYOUT

For all Bottom Slab (B) Tendons unless otherwise noted.

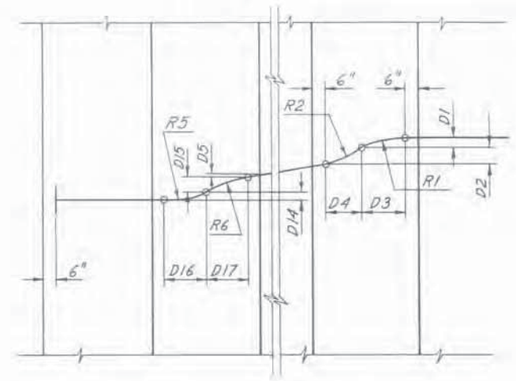

TENDON LAYOUT

For Tendons 1-B4 & 1-B5 @ Abut. 1, Tendons 7-B4 & 7-B5 @ Abut. 7, and Tendons 6-B6 & 7-B5 @ Pier 6.

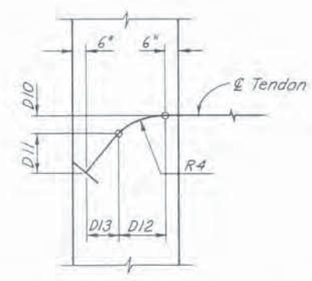

TENDON LAYOUT - ALL B2 TENDONS

TENDON GEOMETRY

DIM.	BACK STATION SPAN NO. 1,2,3	1	1	1	2,3	4,5,6,7	4,5,6	7	7	7
	TENDON NO. 2	3	4	5	3,4	2	3,4,5,6	3	4	5
D1	—	3 7/16"	4 3/4"	2 7/16"	3 7/16"	—	2 15/16"	2 15/16"	2 15/16"	3 3/8"
D2	—	2 3/16"	4 7/8"	2 11/16"	2 3/16"	—	2 11/16"	2 11/16"	2 11/16"	3 1/2"
D3	—	4'-9 3/16"	4'-9 3/16"	4'-9 3/16"	4'-9 3/16"	—	4'-5"	4'-5"	4'-5"	4'-5"
D4	—	1'-11 13/16"	1'-11 13/16"	1'-11 13/16"	1'-11 13/16"	—	2'-7"	2'-7"	2'-7"	2'-7"
D5	—	3/8"	5/8"	3/8"	3/8"	—	3/8"	3/8"	3/8"	7/16"
D6	—	1 5/16"	—	—	1 5/16"	—	1 5/8"	1 5/8"	1 3/4"	—
D7	—	4 3/16"	—	—	4 3/16"	—	4"	4"	3 7/8"	—
D8	—	1'-6 15/16"	—	—	1'-6 15/16"	—	1'-4 3/16"	1'-4 3/16"	1'-6 7/8"	—
D9	—	5'-2 1/16"	—	—	5'-2 1/16"	—	5'-7 11/16"	5'-7 11/16"	2'-9 1/8"	—
D10	1 1/16"	—	—	—	—	1 3/8"	—	—	—	—
D11	4 15/16"	—	—	—	—	4 3/8"	—	—	—	—
D12	2'-0 13/16"	—	—	—	—	2'-6 3/4"	—	—	—	—
D13	4'-8 3/16"	—	—	—	—	4'-5 1/4"	—	—	—	—
D14	—	—	2 15/16"	1 3/16"	—	—	—	—	—	2"
D15	—	—	3 1/16"	1 11/16"	—	—	—	—	—	2 1/8"
D16	—	—	2'-8"	2'-8"	—	—	—	—	—	2'-0"
D17	—	—	1'-4"	1'-4"	—	—	—	—	—	2'-4"
R1	—	40'-0"	40'-0"	40'-0"	40'-0"	—	40'-0"	40'-0"	40'-0"	40'-0"
R2	—	36'-4 1/16"	53'-2 7/16"	54'-7 1/2"	36'-4 1/16"	—	53'-9 1/8"	53'-9 1/8"	53'-9 1/8"	55'-6 3/8"
R3	—	293'-7 3/8"	—	—	293'-7 3/8"	—	276'-2 3/8"	276'-2 3/8"	28'-7 1/16"	—
R4	23'-8 1/2"	—	—	—	—	29'-5 3/16"	—	—	—	—
R5	—	—	30'-0"	30'-0"	—	—	—	—	—	30'-0"
R6	—	—	26'-6 15/16"	27'-4 7/16"	—	—	—	—	—	26'-8 7/8"

DIM.	UP STATION SPAN NO. 1,2		3,4,5,6,7	3,4,5,6	6	7	7	7
	TENDON NO. 2	3,4,5	2	3,4,5	TENDON NO. 6	TENDON NO. 3	TENDON NO. 4	TENDON NO. 5
D1	—	3 7/16"	—	2 15/16"	3"	2 15/16"	4 1/4"	1 3/8"
D2	—	2 3/16"	—	2 11/16"	3 1/16"	2 11/16"	4 1/8"	1 7/16"
D3	—	4'-9 3/16"	—	4'-5"	4'-5"	4'-5"	4'-5"	4'-5"
D4	—	1'-11 13/16"	—	2'-7"	2'-7"	2'-7"	2'-7"	2'-7"
D5	—	3/8"	—	3/8"	7/16"	3/8	5/8"	3/16"
D6	—	1 5/16"	—	1 5/8"	—	1 5/8"	—	—
D7	—	4 3/16"	—	4"	—	4"	—	—
D8	—	1'-6 15/16	—	1'-4 3/16"	—	1'-4 3/16"	—	—
D9	—	5'-2 1/16"	—	5'-7 11/16"	—	5'-7 11/16"	—	—
D10	1 1/16"	—	1 3/8"	—	—	—	—	—
D11	4 15/16"	—	4 5/8"	—	—	—	—	—
D12	2'-0 13/16"	—	2'-6 3/4"	—	—	—	—	—
D13	4'-8 3/16"	—	4'-5 1/4"	—	—	—	—	—
D14	—	—	—	—	2"	—	4 1/4"	1 3/8"
D15	—	—	—	—	1 15/16"	—	4 1/8"	1 7/16"
D16	—	—	—	—	2'-0"	—	4'-5"	4'-5"
D17	—	—	—	—	2'-4"	—	2'-7"	2'-7"
R1	—	40'-0"	—	40'-0"	40'-0"	40'-0"	40'-0"	40'-0"
R2	—	36'-4 1/16"	—	53'-9 1/8"	54'-7 1/2"	53'-9 1/8"	53'-9 1/8"	54'-9 3/8"
R3	—	293'-7 3/8"	—	276'-2 3/8"	—	276'-2 3/8"	—	—
R4	23'-8 1/2"	—	29'-5 3/16"	—	—	—	—	—
R5	—	—	—	—	30'-0"	—	40'-0"	40'-0"
R6	—	—	—	—	27'-8 3/4"	—	53'-9 1/8"	54'-9 3/8"

	INITIAL	DATE	
Designed By	EPK	9-86	Checked By
Checked By	BWH	10-86	Quantities By
Detailed By	PAC	9-86	Checked By

	INITIAL	DATE	
Checked By	EPK	10-86	
Quantities By	BWH	1-87	
Checked By	EPK	9-86	
	PAC	1-87	

HOWARD NEEDLES TAMMEN & BERGENDOFF HNTB

DIVISION OF HIGHWAYS

FRENCH CREEK VIADUCT - I8WI
CONCRETE ALTERNATE

BOTTOM SLAB TENDON
HORIZONTAL GEOMETRY

Designer E. Kollar	Structure	F-08-AV
Detailer P. Carberry	Numbers	(I8WI)
Drawing Number B-49 of 70 Drawings		

Revision Dates (Preliminary Stage Only)

LANMAR'S SUPPLY CO. 1191193

STATE OF COLORADO
STATE DEPARTMENT OF HIGHWAYS
DIVISION OF HIGHWAYS
D. C. H. FORM NO. 117
REV. APR. 1986

AS CONSTRUCTED			
NO REVISIONS	2-15-90	REVISED	VOID

FEDERAL ROAD REGION NO.	DIVISION	PROJECT NUMBER	SHEET NUMBER
VIII	COLORADO	I70-2(134)	II-63

REVISIONS

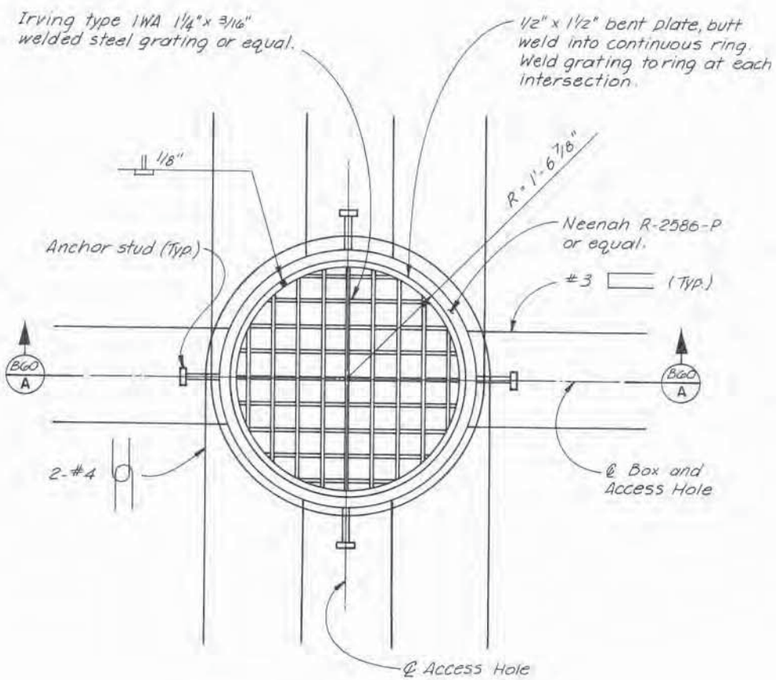

ACCESS HOLE PLAN

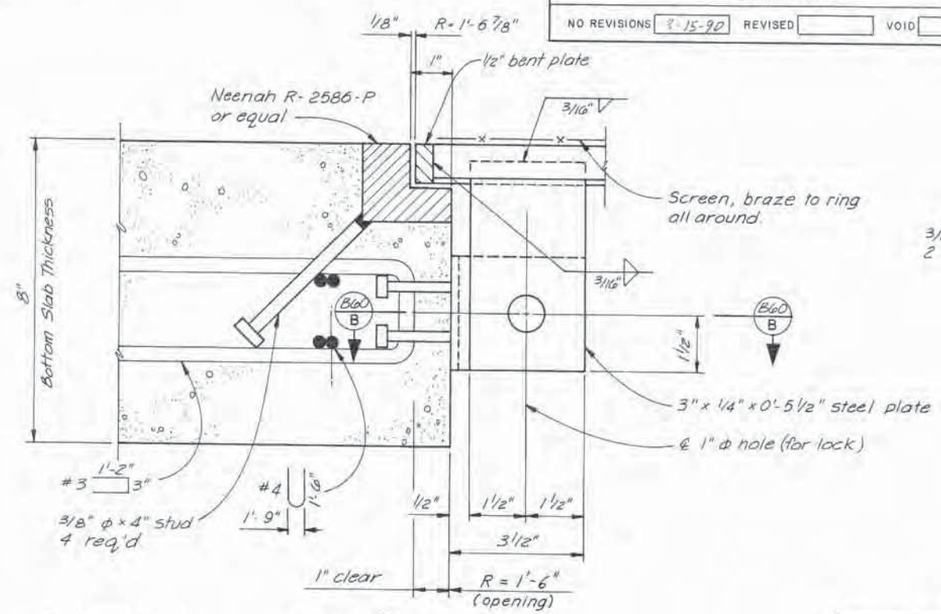

SECTION B60/B

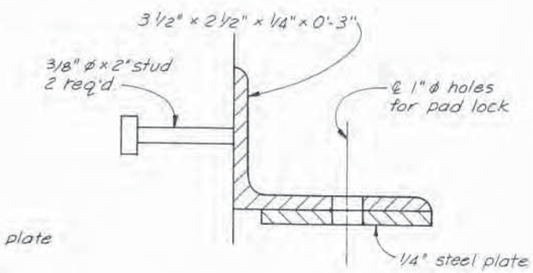

SECTION B60/B

Access Hole Notes:

Access Holes are located in segments 2 and 179, for locations see Dwg. Nos. B-26 and B-28.

Structural steel for approved access holes shall be ASTM A-36. Neenah R-2586-P or equal (with anchor studs) and the 3½" x 2½" x ¼" angle (with anchor studs) shall be galvanized after fabrication. All other portions of access hole shall be painted in accordance with the Special Provisions.

All work necessary for the furnishing and installation of the access holes shall be incidental to Item 618, Concrete Segmental Superstructure.

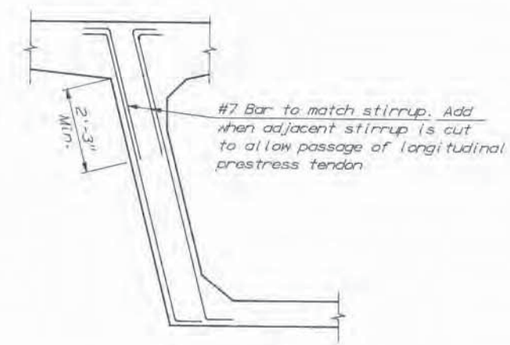

SPECIAL STIRRUP DETAIL

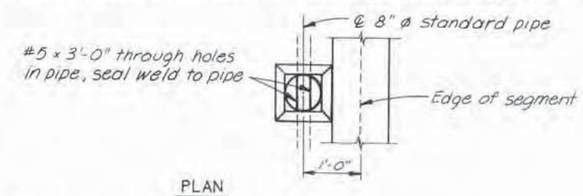

PLAN

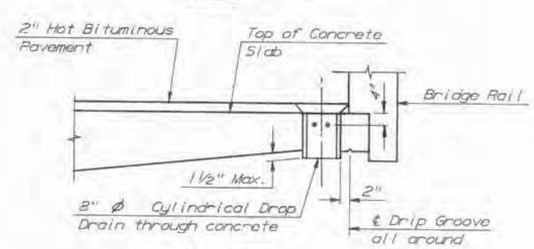

SECTION

DROP DRAIN DETAIL

Drop drain pipe shall be ASTM A-53, Grade B Standard Weight. Galvanize per ASTM A-123 after fabrication.

SEGEMENTS WITH 8" DROP DRAINS

SEGMENT NO.		
2	68	127
9	74	134
16	81	141
26	87	148
32	94	155
38	100	162
44	107	169
55	113	178
61	120	

Notes:

1. Drop drains located at ℄ of segment on low side only.
2. Drop drains are to be included in ITEM 618 "CONCRETE SEGMENTAL SUPERSTRUCTURE".

	INITIAL	DATE		
Designed By	BWH	1-87	Checked By	BWH 1-87
Checked By			Quantities By	
Detailed By	MLP	1-87	Checked By	

HOWARD NEEDLES TAMMEN & BERGENDOFF HNTB

DIVISION OF HIGHWAYS

FRENCH CREEK VIADUCT - 18W1
CONCRETE ALTERNATE

MISCELLANEOUS DETAILS

Designer B. Haynes	Structure	F-08-AV	
Detailer M. Poitra	Numbers	(18W1)	
Drawing Number B-60	of 70	Drawings	

Revision Dates (Preliminary Stage Only)

LANMAN'S SUPPLY CO. 101162

COLORADO
PARTMENT OF HIGHWAYS
OF HIGHWAYS:
FORM NO. 117:
. 1983:

AS CONSTRUCTED					
NO REVISIONS		REVISED	8-15-90	VOID	

FED. ROAD REGION	DIVISION	PROJ. NO.	SHEET NO.	TOTAL SHEETS
VIII	COLO.	I70-2(134)	II-67	

	REVISIONS During Construction	
CR-1	8-15-90	Ty. & Brand name

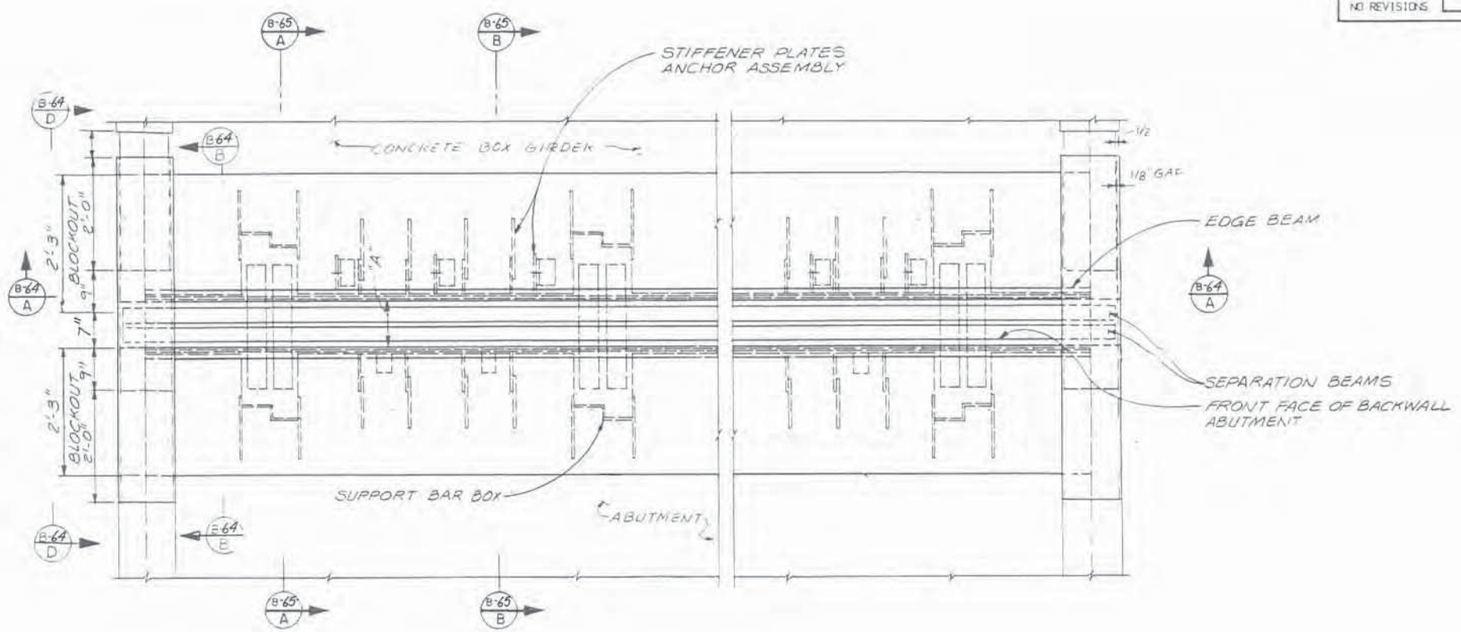

PLAN AT ABUTMENT

PAY LENGTH FOR ITEM
518 BRIDGE EXP. DEVICE

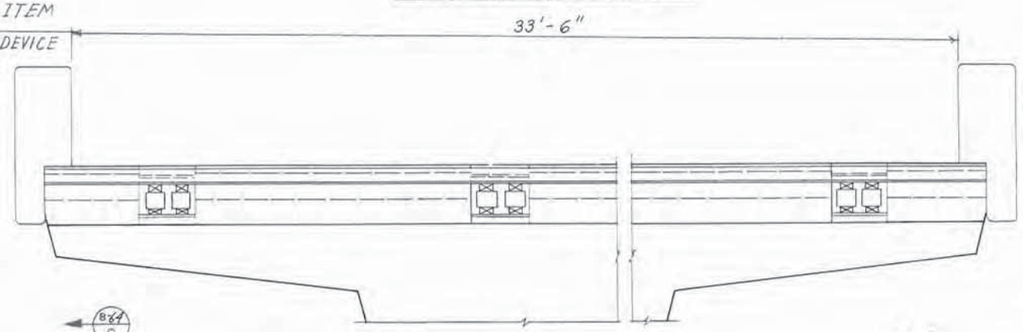

SECTION B-64 A

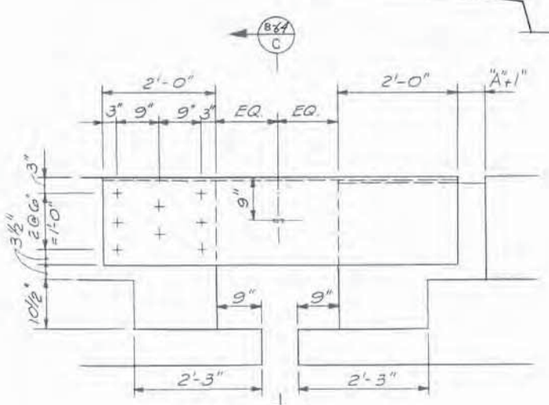

SECTION B-64 B

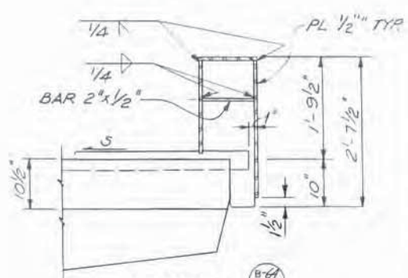

SECTION B-64 C

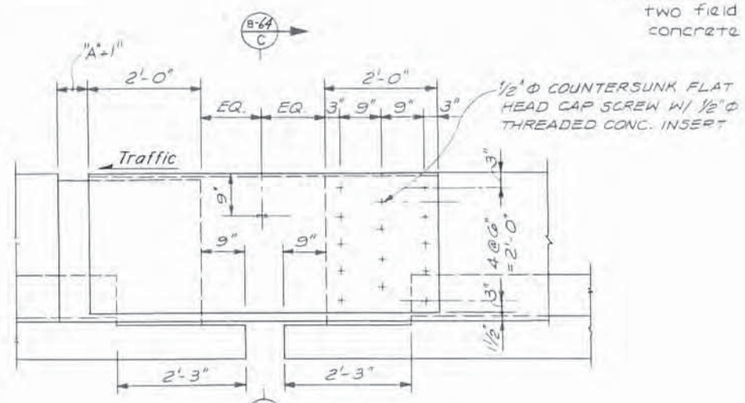

SECTION B-64 D

BRIDGE RAIL BARRIER

STRUCTURE	ABUTMENT No. 1		ABUTMENT No. 8	
TEMPERATURE	DIMENSIONS "A"		DIMENSION "A"	
30°F	10 1/2"		10 1/2"	
40°F	10"		10"	
50°F	9 1/2"		9 1/2"	
60°F	9"		9"	
70°F	8 1/2"		8 1/2"	
80°F	8"		8"	
90°F	7 1/2"		7 1/2"	
100°F	7"		7"	

Acceptable Alternates
~~Wabo Maurer D900~~ or "Maurer" D.S. Brown D241 - Abutment No. 1 & No. 8
D-241

NOTES:

1. LOCATION AND SIZE OF SUPPORT BARS, ANCHOR ASSEMBLY, ANCHOR ANGLE BRACKET FOR ATTACHMENT TO STEEL AND STIFFENER PLATES SHALL BE PER MANUFACTURER'S DRAWING.
2. SEE TABLE FOR DIMESION "A".
3. THE EXPANSION DEVICE SHALL BE INSTALLED PARALLEL TO THE SLOPE AND GRADE OF DECK.
4. WORK THIS DWG WITH DWG. B-65.
5. STEEL PL.: ASTM A36.
6. Barrier rail plates shall receive one shop coat of paint plus two field coats of approved paint that matches the concrete barrier.

DESIGNED BY	INITIAL	DATE	CHECKED BY
CHECKED BY			QUANTITIES BY
DETAILED BY			CHECKED BY

DIVISION OF HIGHWAYS
GLENWOOD CANYON

CONCRETE BOX GIRDER BRIDGE
EXPANSION JOINT PLAN AND SECTION

DESIGNER	CDOH	STRUCTURE NUMBERS	F-08-AV
DETAILER	CDOH		(18W-1)
DRAWING NUMBER B-64		OF 70	DRAWINGS

REVISION DATES (PRELIMINARY STAGE ONLY)

POST RECORDER NO. 88401

F COLORADO
DEPARTMENT OF HIGHWAYS
N OF HIGHWAYS:
4, FORM NO. 117:
T. 1983:

AS CONSTRUCTED			
NO REVISIONS	8-15-90	REVISED	VOID

FED. ROAD REGION	DIVISION	PROJ. NO.	SHEET NO.	TOTAL SHEETS
VIII	COLO.	I70-2(134)	II-68	

REVISIONS		

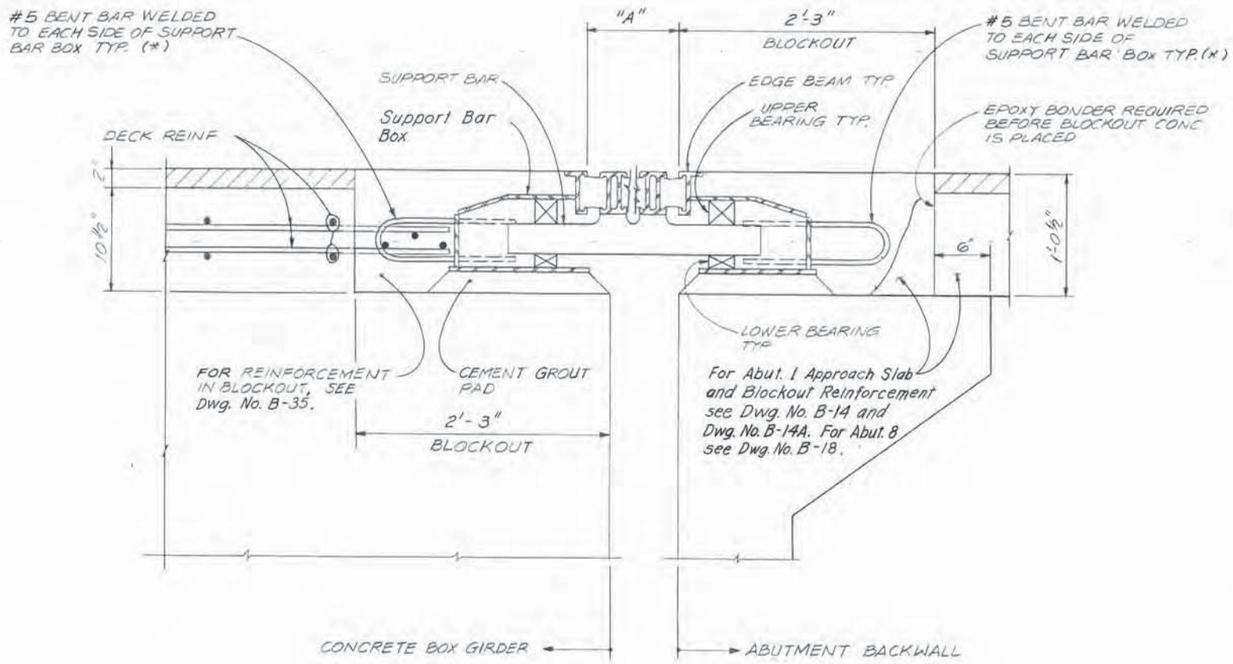

SECTION (B-65 / A)

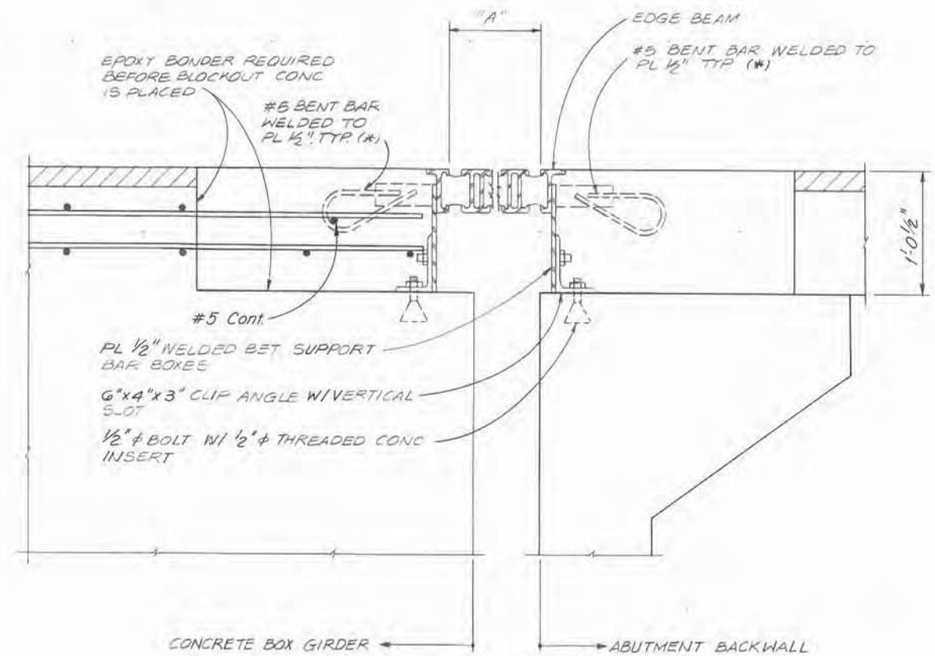

SECTION (B-65 / B)

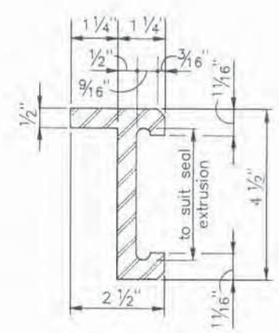

EDGE BEAM

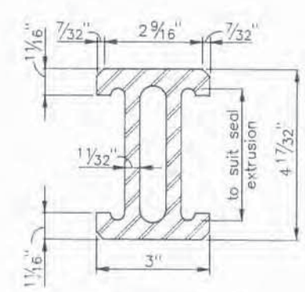

SUPPORT BEAM

NOTE:

1. WORK THIS DWG WITH DWG B-64.
2. For Abutment Backwall Details see Dwg. No's. B-14 and B-18.
3. For Dimension "A" see Dwg. B-64.

*4. ALL REINF. STEEL WELDED TO EXPANSION DEVICE SHALL BE ASTM A706 or A36 Bar.
5. FOR CEMENT GROUT, fc = 5,000 PSI MIN.

DIVISION OF HIGHWAYS

GLENWOOD CANYON

CONCRETE BOX GIRDER BRIDGE

EXPANSION JOINT DETAILS

DESIGNER	CDOH	STRUCTURE NUMBERS	F-08-AV
DETAILER	CDOH		(18W-1)

DRAWING NUMBER B-65 OF 70 DRAWINGS

DESIGNED BY		INITIAL	DATE	CHECKED BY	
CHECKED BY				QUANTITIES BY	
DETAILED BY				CHECKED BY	

REVISION DATES (PRELIMINARY STAGE ONLY)

POST RECORDER NO. 69401

STATE OF COLORADO
STATE DEPARTMENT OF HIGHWAYS
DIVISION OF HIGHWAYS
D. O. H. FORM NO. 117
REV. APR. 1986

AS CONSTRUCTED			
NO REVISIONS 8-15-90	REVISED	VOID	

FEDERAL ROAD REGION NO.	DIVISION	PROJECT NUMBER	SHEET NUMBER
VIII	COLORADO	I 70 - 2 (134)	II - 69

REVISIONS

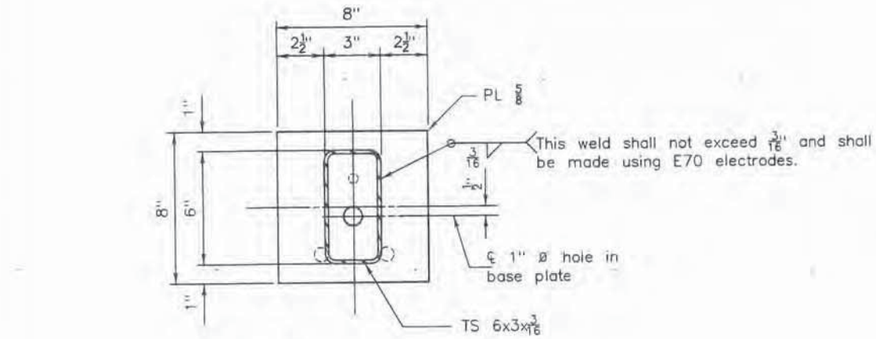

BASE PLATE DETAIL

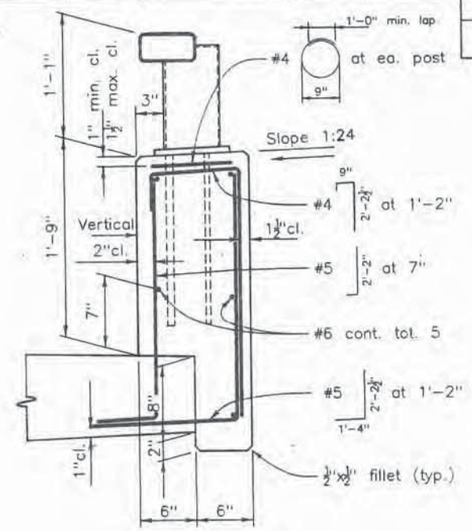

PARAPET DETAIL

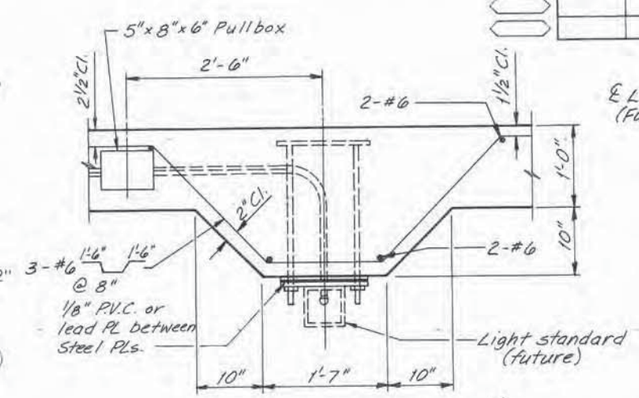

PLAN

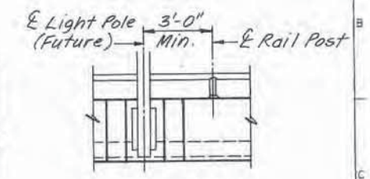

EXTERIOR ELEVATION

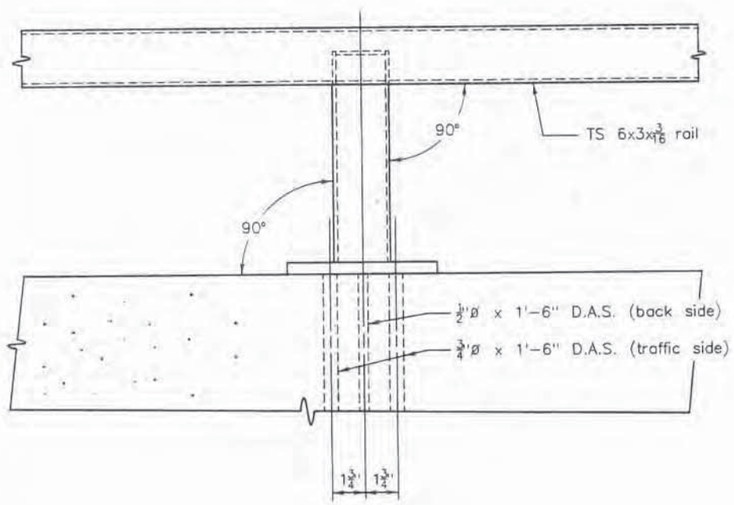

ELEVATION

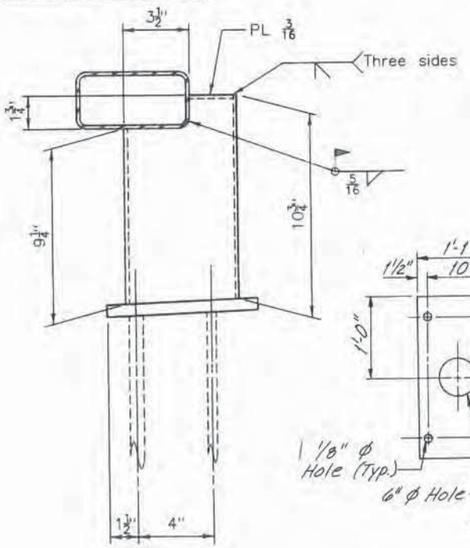

SIDE VIEW

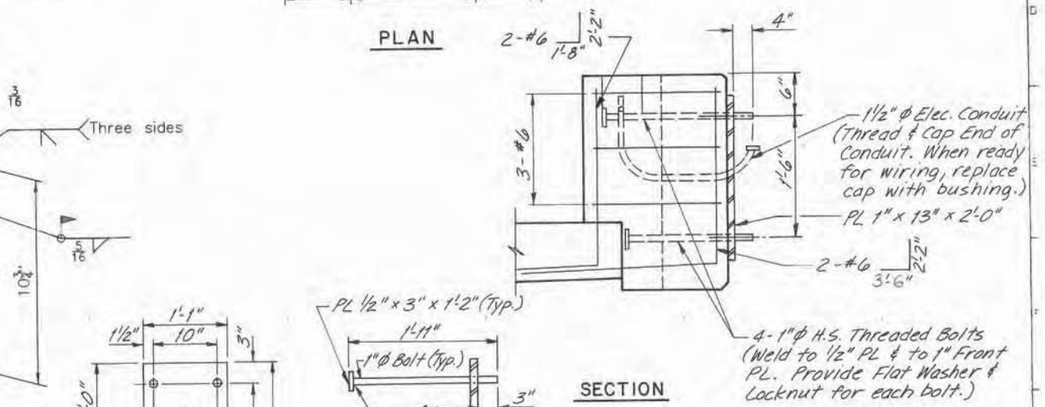

SECTION

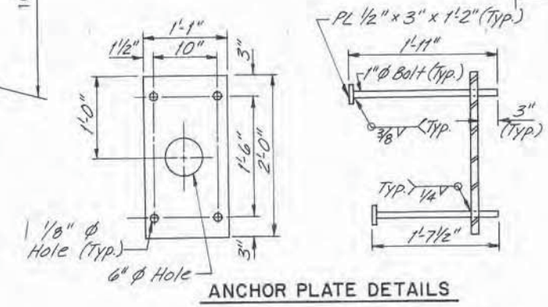

ANCHOR PLATE DETAILS

LIGHT POLE SUPPORT

'A'=1 inch for prestressed concrete pavement joints, and see Bridge Expansion Device Details for joint gap 'A' in concrete deck at bridges.

POST DETAIL

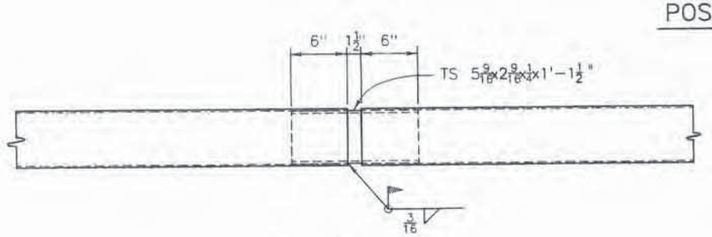

RAIL SPLICE

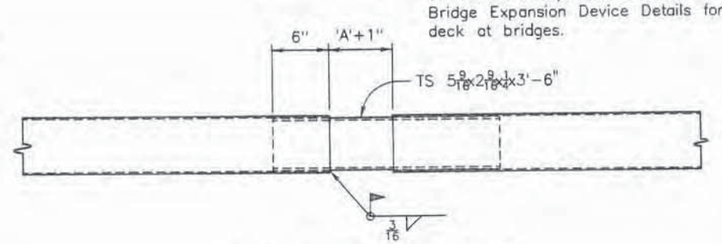

RAIL EXPANSION JOINT

Designed By	Checked By	Quantities By	Checked By
Checked By			
Detailed By			

INITIAL	DATE

DIVISION OF HIGHWAYS

BRIDGE RAIL TYPE 8

Designer	C.D.O.H.	Structure Numbers	F-08-AV (18W1)
Detailer	C.D.O.H.		
Drawing Number B - 66 of 70 Drawings			

Revision Dates (Preliminary Stage Only)

07/23/86 DUA1:(H098.STDS)NEWR8

STATE OF COLORADO
STATE DEPARTMENT OF HIGHWAYS
DIVISION OF HIGHWAYS:
D. O. H. FORM NO. 117:
REV. OCT. 1983:

AS CONSTRUCTED			
NO REVISIONS	8-15-90	REVISED	VOID

FED. ROAD REGION	DIVISION	PROJ. NO.	SHEET NO.	TOTAL SHEETS
VIII	COLO.	I70-2(134)	II-70	

REVISIONS		

SHEET 2 OF 2

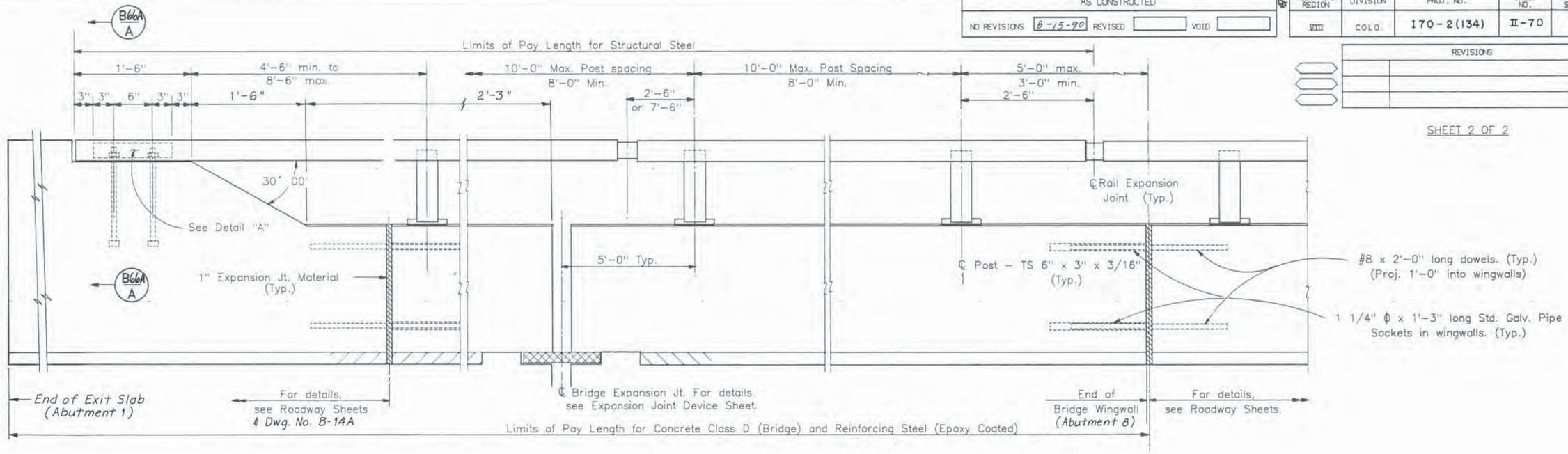

TRANSITION TO ROADWAY CONCRETE BARRIER TYPE 4

RAIL PANEL @ EXPANSION JOINT

CONNECTON TO ROADWAY RAIL BARRIER

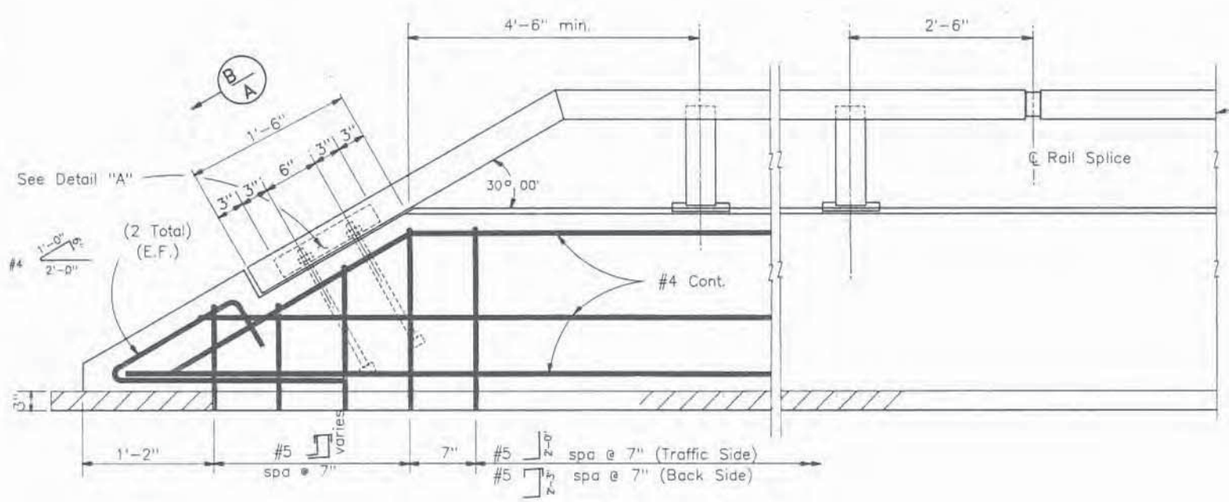

TERMINAL CONNECTION TO END OF RAIL BARRIER

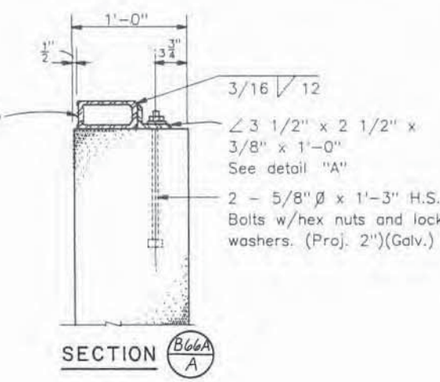

SECTION

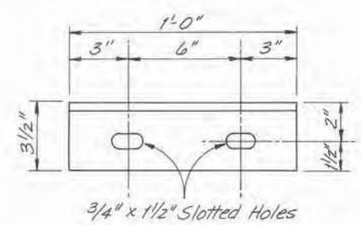

DETAIL "A"

NOTES:

TUBING SHALL BE SHOP BENT OR FABRICATED TO FIT HORIZONTAL CURVES OF LESS THAN 2,400 FOOT RADIUS.

TUBE SHALL BE CONTINUOUS OVER NOT LESS THAN THREE (3) POSTS, BUT OVER FOUR (4) POSTS IS PREFERRED, AND TERMINAL END IS CONSIDERED A POST.

TUBING SHALL BE MANUFACTURED IW ACCORDANCE WITH THE REQUIREMENTS OF ASTM A847.

ALL STRUCTURAL STEEL SHALL BE WEATHERING STEEL, AASHTO M-222(ASTM A588).

SEE ROADWAY PLANS FOR LOCATION OF TERMINAL SECTIONS.

ALL REINFORCING STEEL SHALL BE EPOXY COATED.

ALL CONCRETE SHALL BE CLASS D (BRIDGE).

D.A.S. = DEFORMED ANCHOR STUD, MINIMUM GRADE 60 MATERIAL, AUTOMATICALLY END WELDED.

STEEL PARTS OF BRIDGE RAIL SHALL BE AS SHOWN ON ROADWAY PLANS, WHICH SHALL GOVERN.

STEEL QUANTITIES FOR BRIDGE RAIL ARE NOT INCLUDED IN BRIDGE QUANTITIES.

FOR DELINEATORS, SEE ROADWAY DETAILS.

DESIGNED BY	INITIAL	DATE	CHECKED BY
DRAWN BY			QUANTITIES BY
DETAILED BY			CHECKED BY

WO number 01/17/86 16:31:35 _DUA1:(DRAW.PJ.77014.RDWY.H098.DETAIL) RKL

DIVISION OF HIGHWAYS

BRIDGE RAIL TYPE 8

DESIGNER	CDOH	STRUCTURE NUMBERS	F-08-AV (18W1)
DETAILER	CDOH		

DRAWING NUMBER B-66A OF 70 DRAWINGS

REVISION DATES (PRELIMINARY STAGE ONLY)

STATE OF COLORADO
STATE DEPARTMENT OF HIGHWAYS
DIVISION OF HIGHWAYS
D. O. H. FORM NO. 117
REV. APR. 1986

AS CONSTRUCTED			
NO REVISIONS 8-15-90	REVISED	VOID	

FEDERAL ROAD REGION NO.	DIVISION	PROJECT NUMBER	SHEET NUMBER
VIII	COLORADO	I 70-2(134)	II-71

REVISIONS		

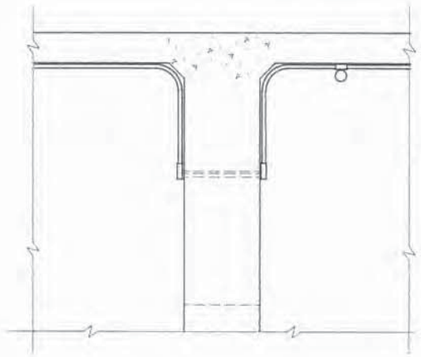

SECTION B67/A

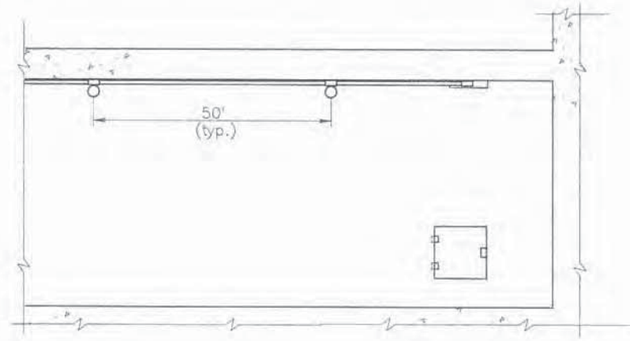

PLAN

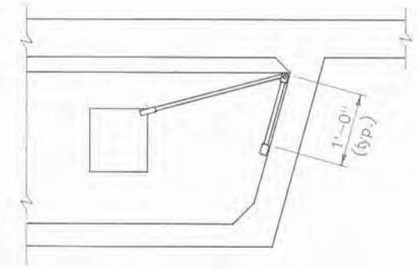

SECTION B67/B

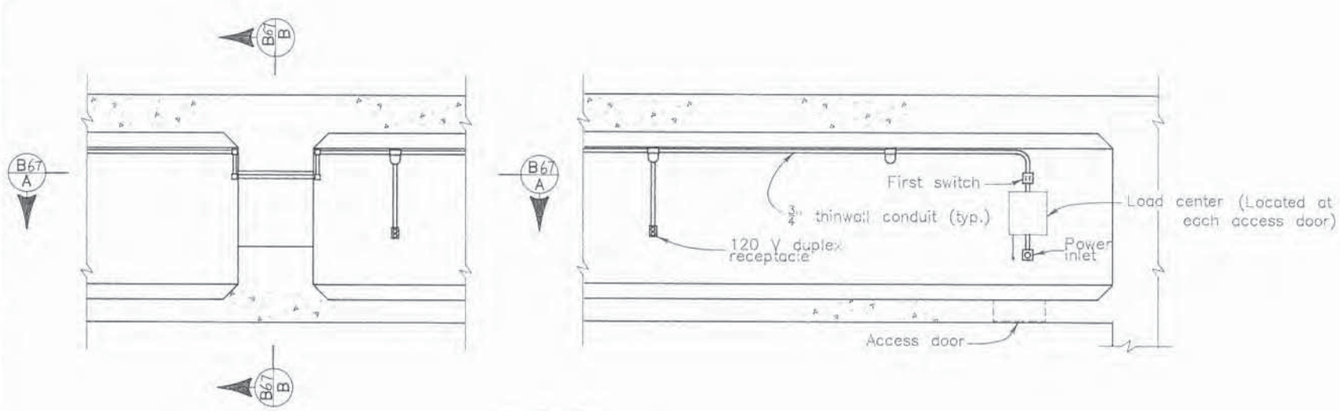

ELEVATION

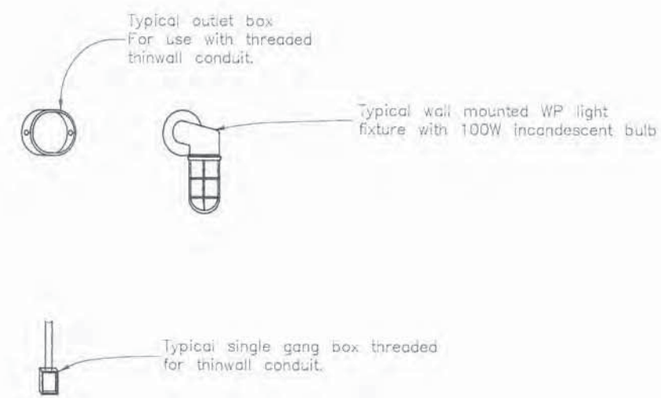

FIXTURE DETAILS

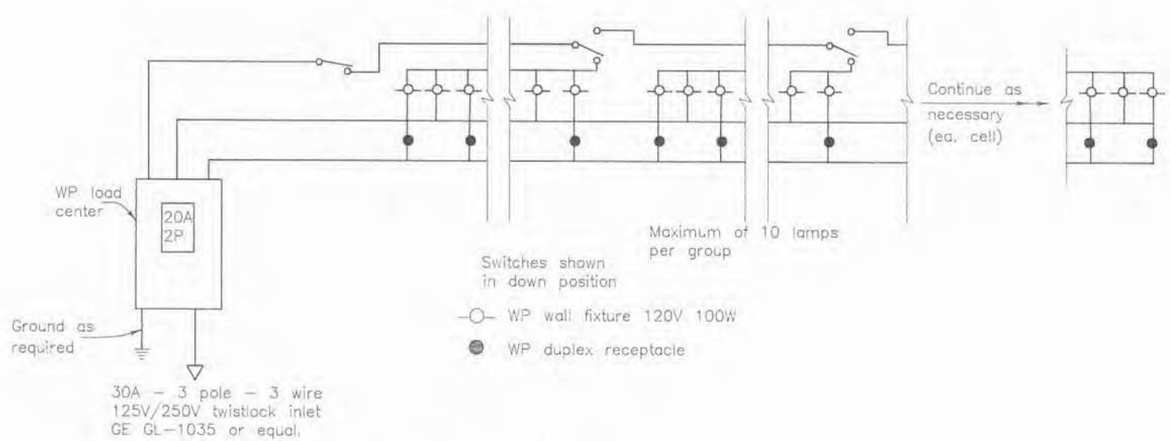

WIRING DIAGRAM

NOTE:
All fasteners shall be 1/4".
Supports for conduit shall be at 10' spacing (max.).
Lighting systems shall be similar length when more than one system is required

INITIAL	DATE	
Designed By		Checked By
Checked By		Quantities By
Detailed By		Checked By

DIVISION OF HIGHWAYS

INTERIOR LIGHTING
(CONCRETE BOX GIRDER)

Designer	C.D.O.H.	Structure	F-08-AV
Detailer	C.D.O.H.	Numbers	(18WI)
Drawing Number B-67		of	70 Drawings

Revision Dates (Preliminary Stage Only)

02/24/87 DUBOI(KHEATER-PROJ)ELECON