FED. ROAD REGION NO.	DIVISION	PROJECT NO.	SHEET NO.	TOTAL SHEETS
9	COLO.	50117 (4)	7	

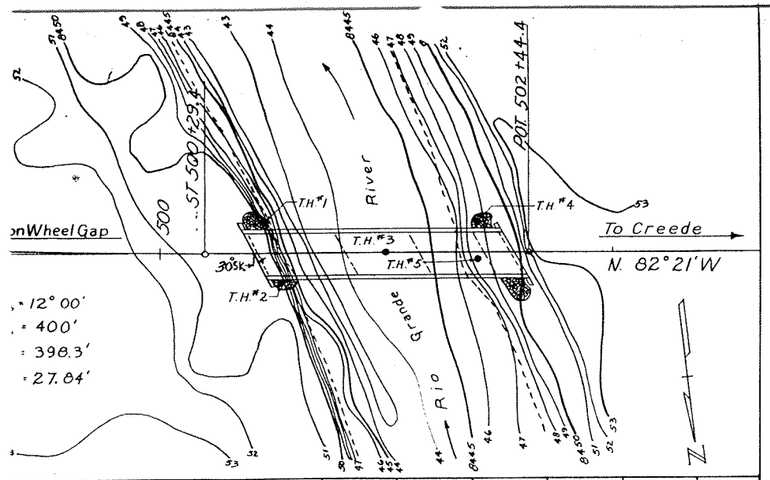

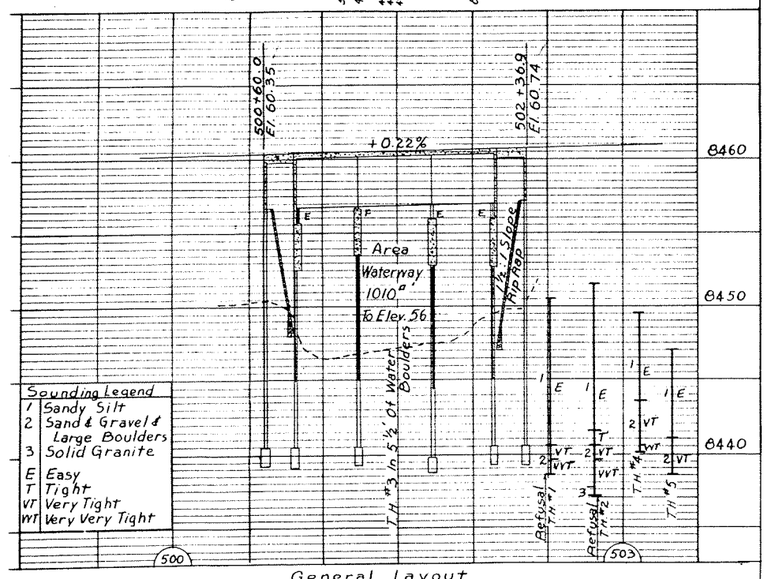

General Layout

BAR LIST ~ SUPERSTRUCTURE

MARK	SIZE	NO REQ'D	LENGTH	TYPE	DIMENSIONS ℓ	DIMENSIONS m
401	½"φ	12	17'-0"	Str.		
402	½"φ	354	4'-0"	IV	1'-2"	1'-8"
403	½"φ	76	3'-10"	I	1'-1"	6"
404	½"φ	284	21'-6"	Str.		
405	½"φ	142	25'-10"	Str.		
501	⅝"φ	264	39'-0	Str.		
502	⅝"φ	109	40'-4"	XVI		
601	¾"φ	68	18'-2"	XIX		
801	1"φ	68	17'-7"	Str.		

BAR SUMMARY

11686 Lin.ft. ½"φ @ .668#/Lin.ft. = 7806 Lb.
14692 Lin.ft. ⅝"φ @ 1.043#/Lin.ft. = 15324 Lb.
1235 Lin.ft. ¾"φ @ 1.502#/Lin.ft. = 1855 Lb.
1196 Lin.ft. 1"φ @ 2.67#/Lin.ft. = 3193 Lb.
Plus 1% ± Overrun = 282 Lb.
Total = 28460 Lb.

BAR LIST ~ ABUT. NO. 1 (ABUT. 6 SIMILAR)

MARK	SIZE	NO REQ'D	LENGTH	TYPE	DIMENSIONS ℓ	DIMENSIONS m
406			9'-4"		2'-7"	
To	½"φ	2 ea.	by 2" to	I	by 1" to	1'-9"
422			6'-8"		1'-3"	
423	½"φ	23	9'-10"	II		
424	½"φ	20	4'-0"	Str.		
425	½"φ	4	2'-4"	Str.		
430	½"φ	2	2.6'-2"	Str.		
503	⅝"φ	12	4'-0"	Str.		
504	⅝"φ	8.	19'-6"	Str.		
505	⅝"φ	4	15'-2"	Str.		
506	⅝"φ	26	4'-8"	Str.		
509	⅝"φ	4	7'-10"	VI		
802	1"φ	12	8'-8"	Str.		
901	1⅛"φ	8	20'-3"	Str.		
902	1⅛"φ	4	14'-0"	Str.		
903	1⅛"φ	4	24'-0"	Str.		
904	1⅛"φ	4	51'-6"	Str.		

BAR SUMMARY

640 Lin.ft. ½"φ @ .668#/Lin.ft. = 428 Lb.
417 Lin.ft. ⅝"φ @ 1.043#/Lin.ft. = 453 Lb.
104 Lin.ft. 1"φ @ 2.67#/Lin.ft. = 278 Lb.
520 Lin.ft. 1⅛"φ @ 3.4#/Lin.ft. = 1768 Lb.
Plus 1% ± Overrun = 31 Lb.
Total = 2940 Lb.

BAR LIST ~ PIER NO. 2 (PIER 5 SIMILAR)

MARK	SIZE	NO REQ'D	LENGTH	TYPE	DIMENSIONS ℓ	DIMENSIONS m
426	½"φ	16	8'-4"	XIII		
431	½"φ	22	8'-6"	Str.		
432	½"φ	10	18'-0"	Str.		
433	½"φ	40	12'-4"	I	3'-3"	2'-7"
434	½"φ	4	39'-0"	Str.		
510	⅝"φ	24	5'-0"	Str.		
511	⅝"φ	40	8'-3"	IV	3'-9"	9"
512	⅝"φ	3	39'-0"	Str.		
513	⅝"φ	3	18'-0"	Str.		
514	⅝"φ	39	2'-0"	Str.		
804	1"φ	16	15'-8"	Str.		
1002	1¼"φ	16	12'-6"	Str.		

BAR SUMMARY

1149 Lin.ft. ½"φ @ .668#/Lin.ft. = 767 Lb.
699 Lin.ft. ⅝"φ @ 1.043#/Lin.ft. = 729 Lb.
251 Lin.ft. 1"φ @ 2.67#/Lin.ft. = 670 Lb.
200 Lin.ft. 1¼"φ @ 4.303#/Lin.ft. = 861 Lb.
Plus 1% ± Overrun = 33 Lb.
Total = 3060 Lb.

BAR LIST ~ PIER NO. 3 (PIER 4 SIMILAR)

MARK	SIZE	NO REQ'D	LENGTH	TYPE	DIMENSIONS ℓ	DIMENSIONS m
426	½"φ	14	8'-4"	XIII		
427	½"φ	29	10'-8"	I	3'-3"	1'-9"
428	½"φ	16	23'-0"	Str.		
429	½"φ	26	9'-6"	Str.		
507	⅝"φ	32	5'-6"	Str.		
508	⅝"φ	3	37'-6"	Str.		
515	⅝"φ	3	23'-0"	Str.		
803	1"φ	16	16'-8"	Str.		
1001	1¼"φ	14	11'-0"	Str.		

BAR SUMMARY

1041 Lin.ft. ½"φ @ .668#/Lin.ft. = 695 Lb.
358 Lin.ft. ⅝"φ @ 1.043#/Lin.ft. = 373 Lb.
267 Lin.ft. 1"φ @ 2.67#/Lin.ft. = 713 Lb.
154 Lin.ft. 1¼"φ @ 4.303#/Lin.ft. = 663 Lb.
Plus 1% ± Overrun = 26 Lb.
Total = 2470 Lb.

BAR BENDING DIAGRAMS (All Dimensions Are Out To Out Of Bar)

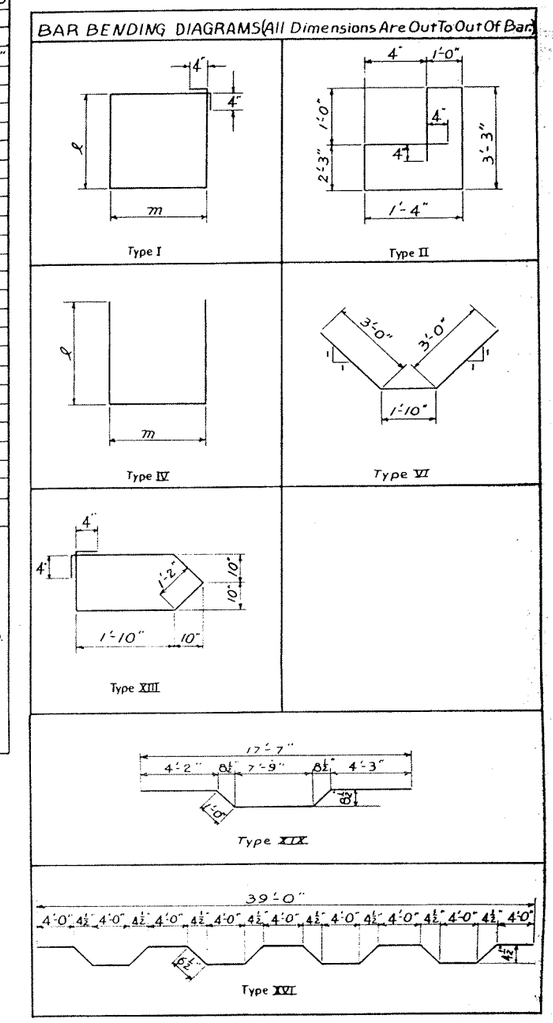

SUMMARY OF QUANTITIES

Item	Description	Unit	Super-Structure	Abut. No. 1	Pier No. 2	Pier No. 3	Pier No. 4	Pier No. 5	Abut. No. 6	Total
14g	Common Excavation (Str.)	Cu. Yd.		95	50	49	58	56	92	400
16ex	Structure Backfill (Class I)	Cu. Yd.		57	36	34	41	41	53	262
16c	Mechanical Tamping	Hrs.		10	4	3	4	4	10	35
42b	Treated Bridge Timber	Mft. bm		0.139					0.139	0.278
46a	Class "A" Concrete	Cu. Yd.	169.2	20.7	32.7	26.5	26.5	32.7	20.7	329
47	Reinforcing Steel (Plus 1% ± Overrun)	Lbs.	28,460	2940	3060	2470	2470	3060	2940	45,400
48	Structural Steel (Plus ½% for Paint)	Lbs.	9990 ①	40	225	250	250	225	40	14,020
48x	Transport, Aller and Erect Struct. Steel	Lbs.	110,940							110,940
67	Rip Rap (1'-6" thick)	Cu. Yd.		70					81	151
80c	Sheet Copper (32 oz.)	Lbs.	12							12
89a	Drain Pipe (4"φ x 2'-0") (Conc. Floor)	Each	18							18
11a	Removal of Bridge	Lump Sum								Lump Sum
③	½" Exp'n Joint Mat'l (Type I)	Sq. ft.	80							80

① Includes 3055 Lbs. of new handrail steel.
② 110,940 Lbs. of salvaged structural steel stored at Department of Highways yard at Penrose, Colorado.
③ Exp'n Joint Mat'l. shall be in accordance to A.A.S.H.O. Specification M-153-54 and of the type shown, and shall be included in the Bid Price for Item 46.

GENERAL NOTES

ALL WORK SHALL BE DONE ACCORDING TO THE STANDARD SPECIFICATIONS OF THE COLORADO DEPARTMENT OF HIGHWAYS APPLICABLE TO THE PROJECT.
ALL CONCRETE SHALL BE CLASS "A" AND AIR ENTRAINED AS SPECIFIED.
ALL CONCRETE SURFACES EXPOSED TO NORMAL VIEW BY HIGHWAY TRAFFIC SHALL RECEIVE CLASS 2 SURFACE FINISH. WING FACES SHALL RECEIVE ORDINARY FINISH.
CONCRETE GIRDERS, FLOOR SLABS, AND CURBS SHALL BE POURED MONOLITHICALLY.
FORMS FOR CONCRETE SURFACES EXPOSED IN THE FINISHED WORK SHALL BE CONSTRUCTED OF SHIPLAP OR TONGUE AND GROOVE LUMBER S 3 S UNLESS FACED WITH PANEL BOARD.
FOOTINGS IN ROCK SHALL BE POURED OUT TO ROCK AND NOT FORMED.
SOUNDINGS AND DEPTH OF FOOTING SHOWN ARE IN ACCORDANCE WITH THE BEST AVAILABLE DATA AND WHEN DIFFERENT CONDITIONS ARE ENCOUNTERED THE BRIDGE ENGINEER WILL INSPECT AND DETERMINE IF REDESIGN IS NECESSARY.
ALL REINFORCING STEEL SHALL CONFORM TO ASTM SPECIFICATION A 305-50T OR THE LATEST REVISION THEREOF, AND SHALL BE INTERMEDIATE GRADE STEEL OF A DEFORMED TYPE. EACH BAR SHALL BE TAGGED WITH THE NUMBER DESIGNATION AND THE STATION NUMBER OF THE PROJECT. PRIMARY BARS SHALL NOT BE SPLICED AND SECONDARY BARS WHEN SPLICED SHALL LAP 20 DIAMETERS OF THE BAR. DIMENSIONS FOR REINFORCING STEEL NOT SHOWN AS CLEAR SHALL BE TO THE CENTER LINE OF THE BAR.
ALL STRUCTURAL STEEL SHALL BE PAINTED ONE SHOP COAT OF ZINC CHROMATE AND TWO FIELD COATS OF ALUMINUM, UNLESS OTHERWISE NOTED, EXCEPT THE UNEXPOSED PORTION OF STEEL PILING NEED NOT BE PAINTED.
HANDRAIL BOLTS SHALL HAVE HEX HEADS, NUTS, AND LOCK WASHERS UNLESS OTHERWISE SPECIFIED AND ALL RIVETS, EXCEPT AS NOTED ARE ¾" DIA. AND SHALL BE POWER DRIVEN.
WHEN TREATED TIMBER OR PILING IS SHOWN ON THE DRAWING THE PRESERVATIVE FOR TREATMENT SHALL BE CREOSOTE OIL.
WHEN EXCAVATING FOR FOOTINGS THE FINAL ONE FOOT IN DEPTH SHALL BE DONE BY HAND LABOR METHODS.
IF BY PERMISSION OF THE ENGINEER PRIMARY BARS ARE SPLICED, THEY SHALL LAP 34 DIAMETERS, FOR BARS NEAR TOP OF BEAMS AND GIRDERS HAVING MORE THAN 12 INCHES OF CONCRETE UNDER THE BARS AND 20 DIAMETERS FOR BARS NEAR BOTTOM OF MEMBERS.
HIGH TENSILE STRENGTH BOLTS MAY BE SUBSTITUTED FOR FIELD RIVETS BUT AT NO ADDITIONAL EXPENSE TO THE STATE. THE BOLTS SHALL BE ASSEMBLED IN ACCORDANCE WITH SPECIFICATIONS APPROVED BY THE RESEARCH COUNCIL ON RIVETED AND BOLTED STRUCTURAL JOINTS OF THE ENGINEERING FOUNDATION JAN. 31, 1951.

STRUCTURE NO. M-9-B

LOADING DATA

LIVE LOAD = A.A.S.H.O. (H20-S16-44)
DEAD LOAD ASSUMES 15 LBS. PER SQ. FT. ADDITIONAL WEARING SURFACE WHICH INCLUDES THE ½ INCH CONCRETE MONOLITHIC WEARING SURFACE SHOWN.

DESIGNING DATA

A.A.S.H.O. 1953 UNIT STRESSES, EXCEPT AS NOTED.

Reinforcing Steel f_s = 20000 lbs. per sq. in.
Structural Steel f_s = 18000 lbs. per sq. in.
f_c = 1200 lbs. per sq. in.
n = 10

COLORADO DEPARTMENT OF HIGHWAYS

3 Spans (43'-6", 51'-0", 43'-6") Continuous I Beams & Concrete Slab With 2 Concrete Approach Slab Spans (17' Ea.) Layout, Quantities, Bar List & Notes.

Across Rio Grande River
Sta. 500+60 To 502+36.9
Near Wagon Wheel Gap Sec. 26 T. 41N R. 1E

Designed by
Made by
Checked by

Approved by [signature]
Bridge Engineer
Date: Oct. 7, 1957

	DIVISION	PROJECT NO.		
9	COLO.	S0117(4)	8	

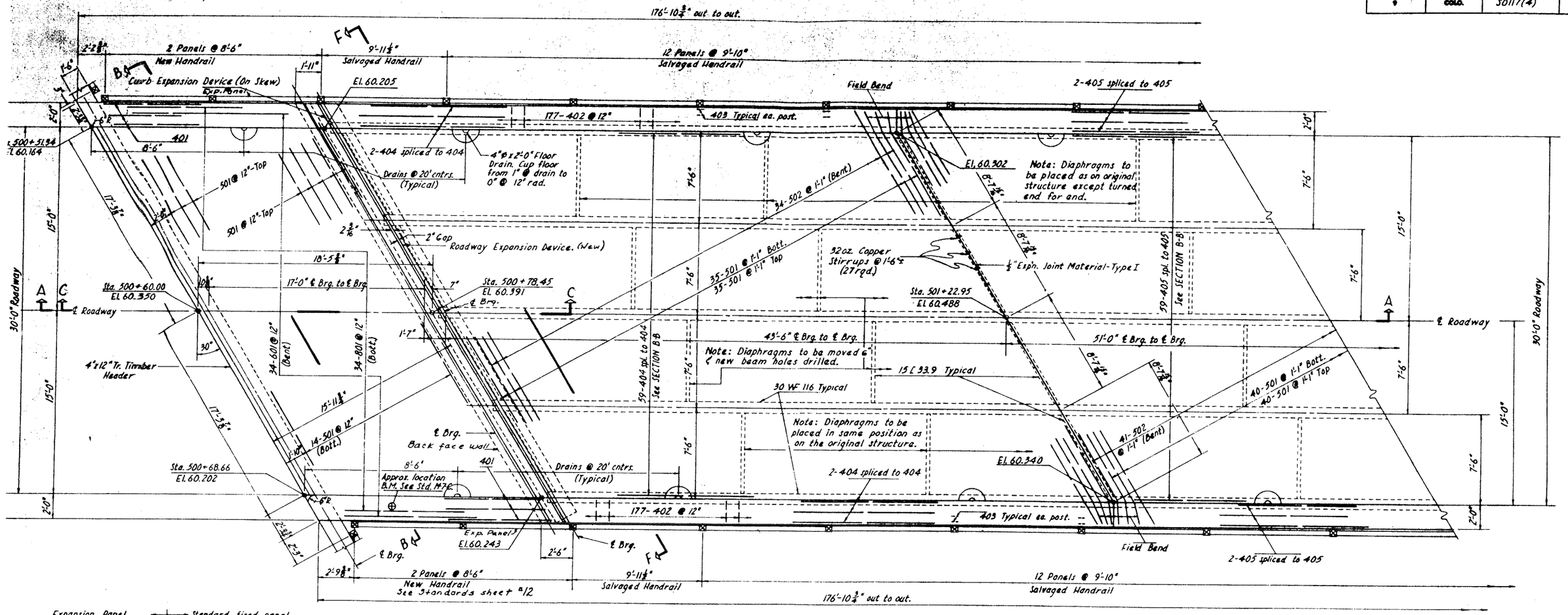

HALF SUPERSTRUCTURE PLAN

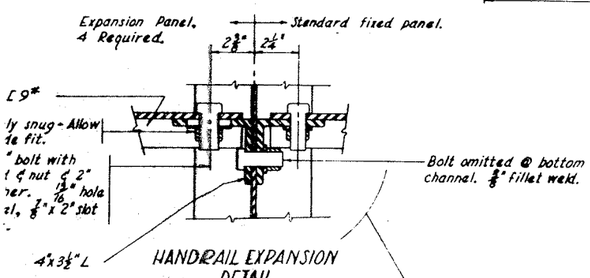

HANDRAIL EXPANSION DETAIL

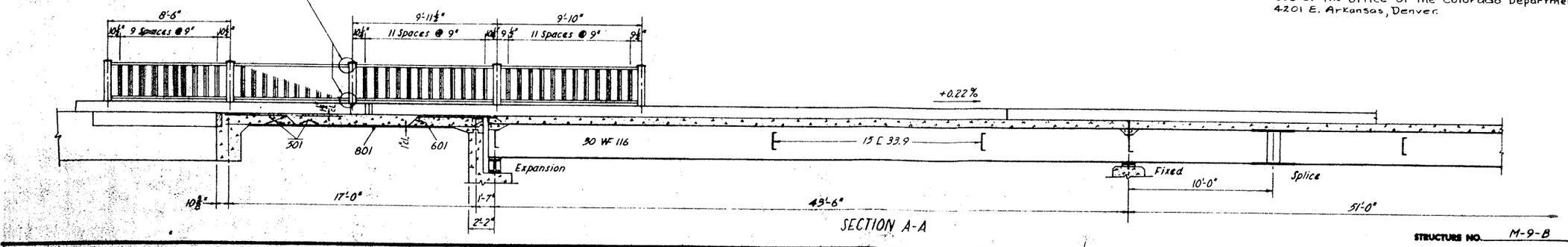

SECTION A-A

NOTE

The following materials are to be salvaged from Kettle Creek bridge formerly Project No. FI 002-2(25), Structure No. I-17-A & X; Steel Girders, Diaphragms, Bearing & Masonry Plates, Rockers & Steel Handrail as noted. Materials stored at Penrose, Colo.

In addition to above, the following items are to be furnished new; Roadway & Curb Expansion Devices, Abutment & Pier Diaphragm Clips (to conform to parabolic deck), Steel Handrail as noted & all anchor bolts for all Steel Handrail & Masonry Plates.

Shop plans for structural steel may be seen in room 330 of the office of the Colorado Department of Highways 4201 E. Arkansas, Denver.

STRUCTURE NO. M-9-B

COLORADO DEPARTMENT OF HIGHWAYS

HALF SUPERSTRUCTURE PLAN & SECTION

Across RIO GRANDE RIVER
Sta. 500+60.00 to 502+36.90
Near Wagon Wheel Gap Sec. 26 T.41N. R. 1E

Designed by GET
Made by JGG
Checked by
Approved by [illegible]
Bridge Engineer
Date Oct. 7 1957

FED. ROAD REGION	DIVISION	PROJECT NO.	SHEET NO.	TOTAL SHEETS
9	COLO.	SO 117(4)	9	

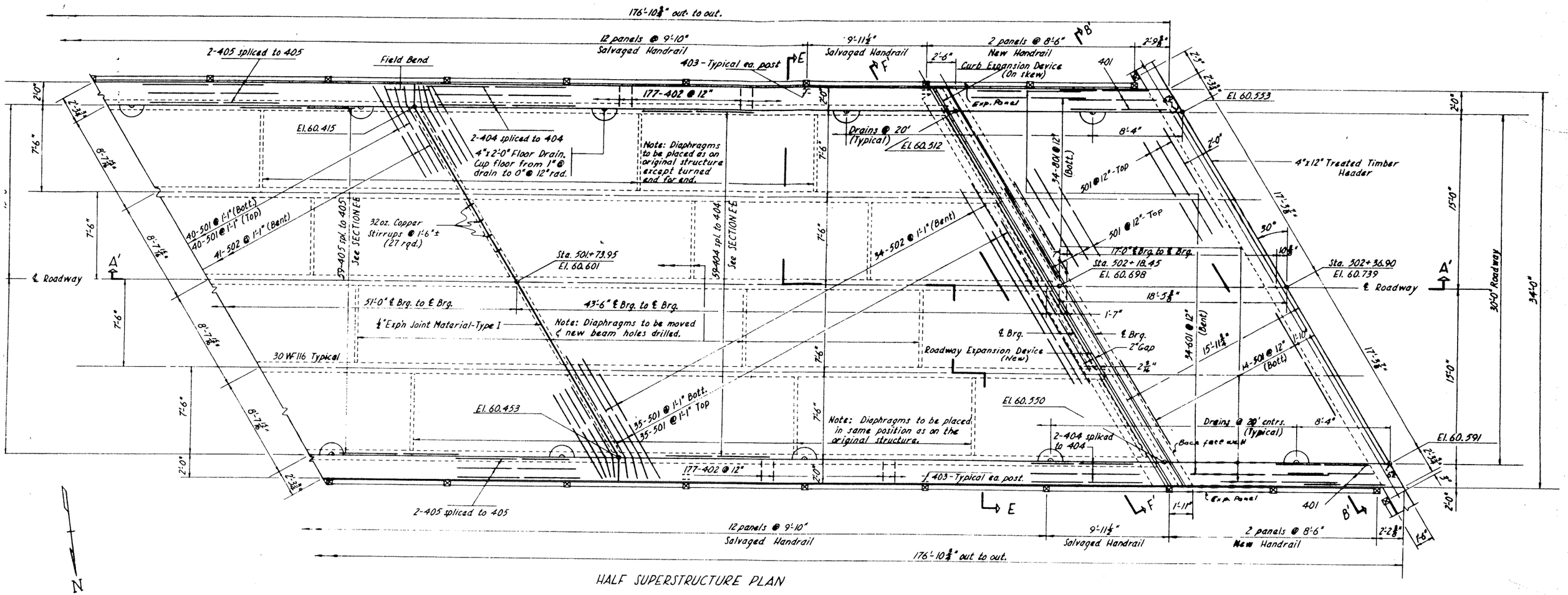

HALF SUPERSTRUCTURE PLAN

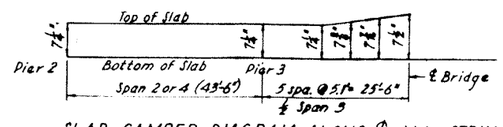

SLAB CAMBER DIAGRAM ALONG ℄ ALL STRINGERS

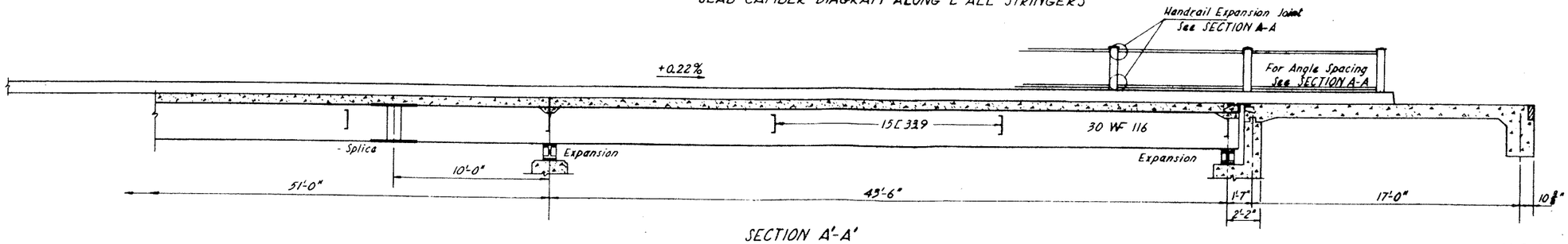

SECTION A'-A'

STRUCTURE NO. M-9-B

COLORADO DEPARTMENT OF HIGHWAYS

HALF SUPERSTRUCTURE PLAN & SECTION

Across RIO GRANDE RIVER
Sta. 500+60.00 to 502+36.90
Near Wagon Wheel Gap Sec. 26 T. 41N R. 1E

Designed by GET
Made by JGG
Checked by

Approved by [illegible]
Bridge Engineer
Date: Oct. 7, 1967

FED. RD.	DIVISION	PROJECT NO.	SHEET NO.	TOTAL SHEETS
	COLO.	S 0117 (4)	10	

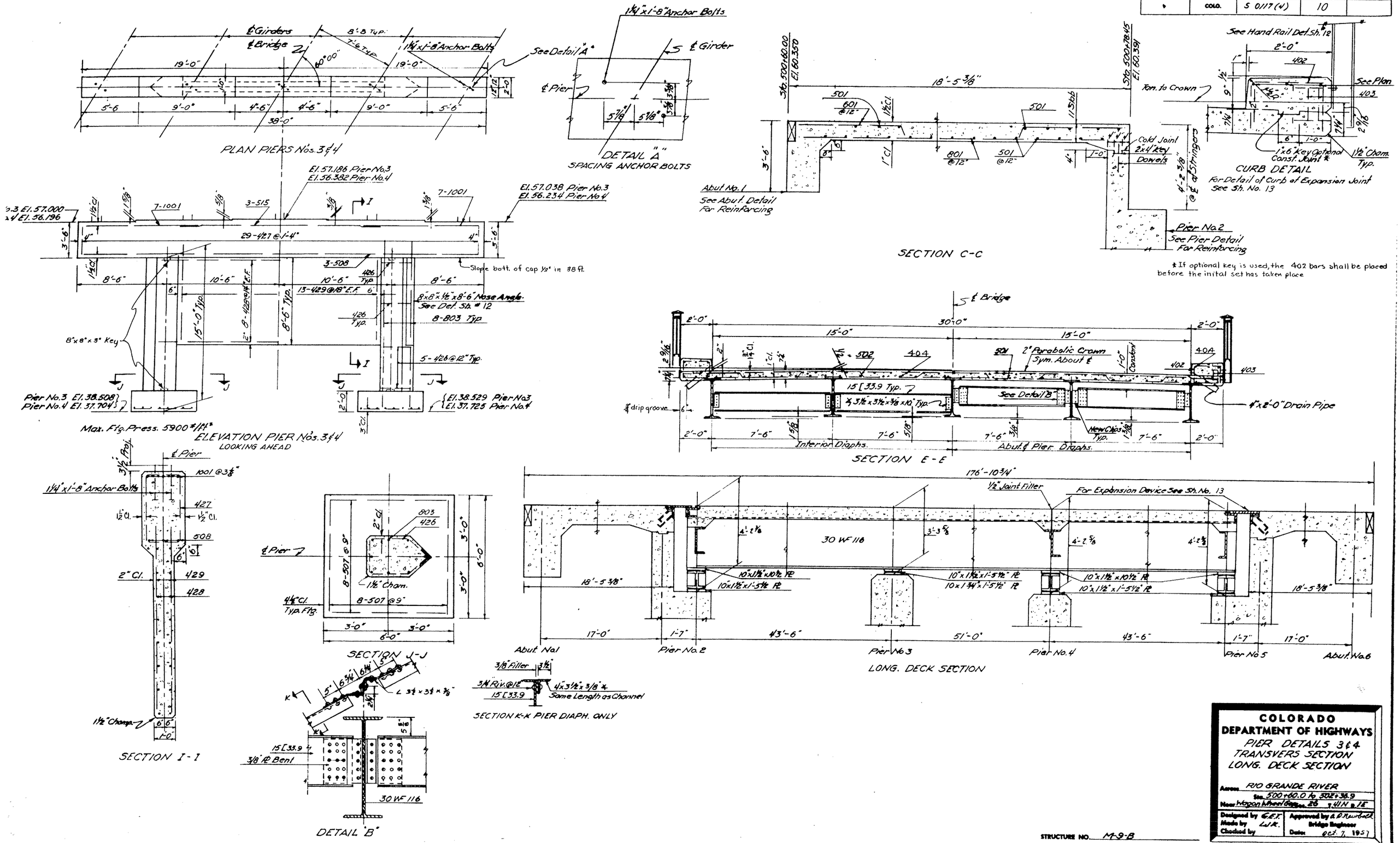

COLORADO DEPARTMENT OF HIGHWAYS

PIER DETAILS 3 & 4
TRANSVERS SECTION
LONG. DECK SECTION

Across RIO GRANDE RIVER
Sta. 500+60.0 to 502+36.9
Near Wagon Wheel Gap Sec. 26 T. 41 N. R. 1 E.

Designed by G.E.T.
Made by L.J.R.
Checked by
Approved by A. D. Newbold
Bridge Engineer
Date: Oct. 7, 1957

STRUCTURE NO. M-9-B

FED. AID REGION	DIVISION	PROJECT NO.	SHEET NO.	TOTAL SHEETS
	COLO.	50117(4)	13	

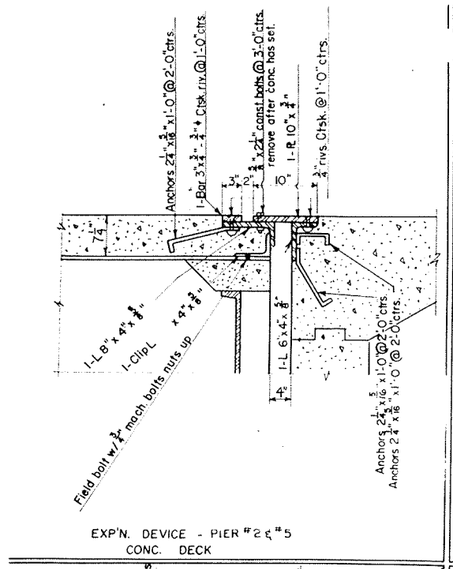

EXP'N. DEVICE - PIER #2 & #5
CONC. DECK

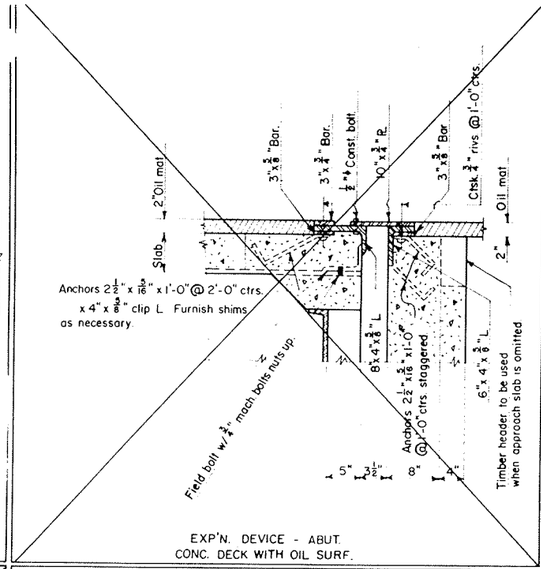

EXP'N. DEVICE - ABUT.
CONC. DECK WITH OIL SURF.

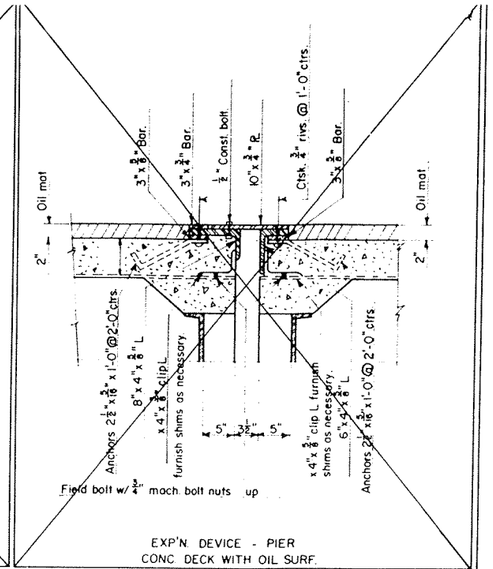

EXP'N. DEVICE - PIER
CONC. DECK WITH OIL SURF.

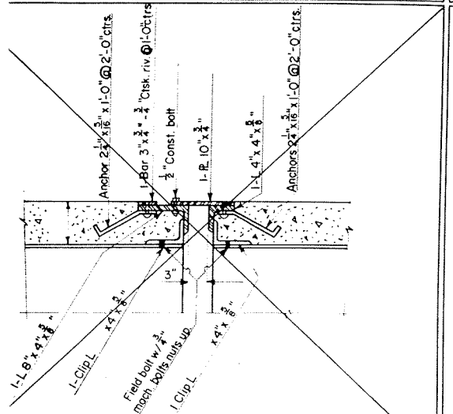

EXP'N. DEVICE - PIER
CONC. DECK

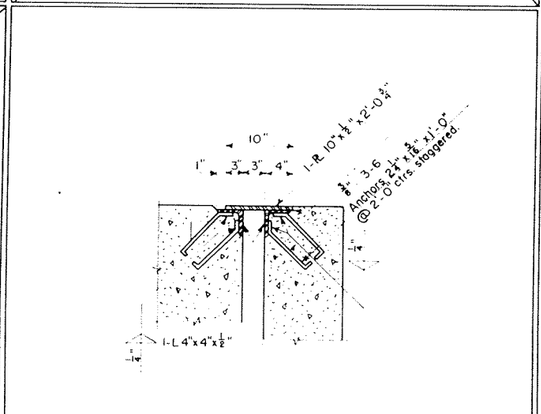

EXP'N. DEVICE - CURBS
(On Skew)

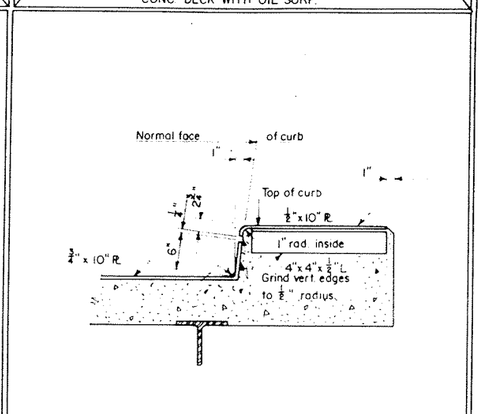

EXP'N. DEVICE
SECTION AT CURB (On Skew)

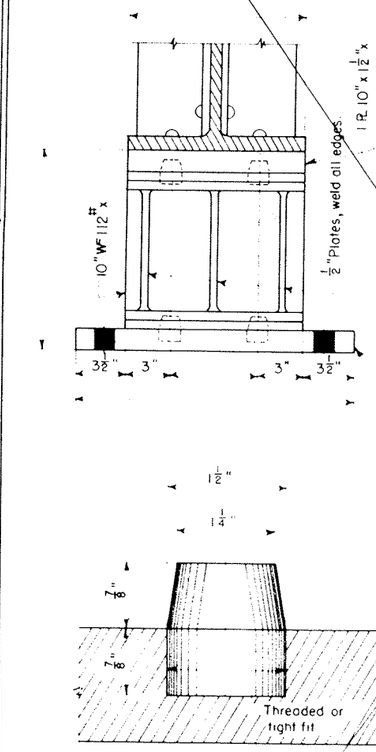

PINTLE DETAIL

NO BOLTS REQ'D.

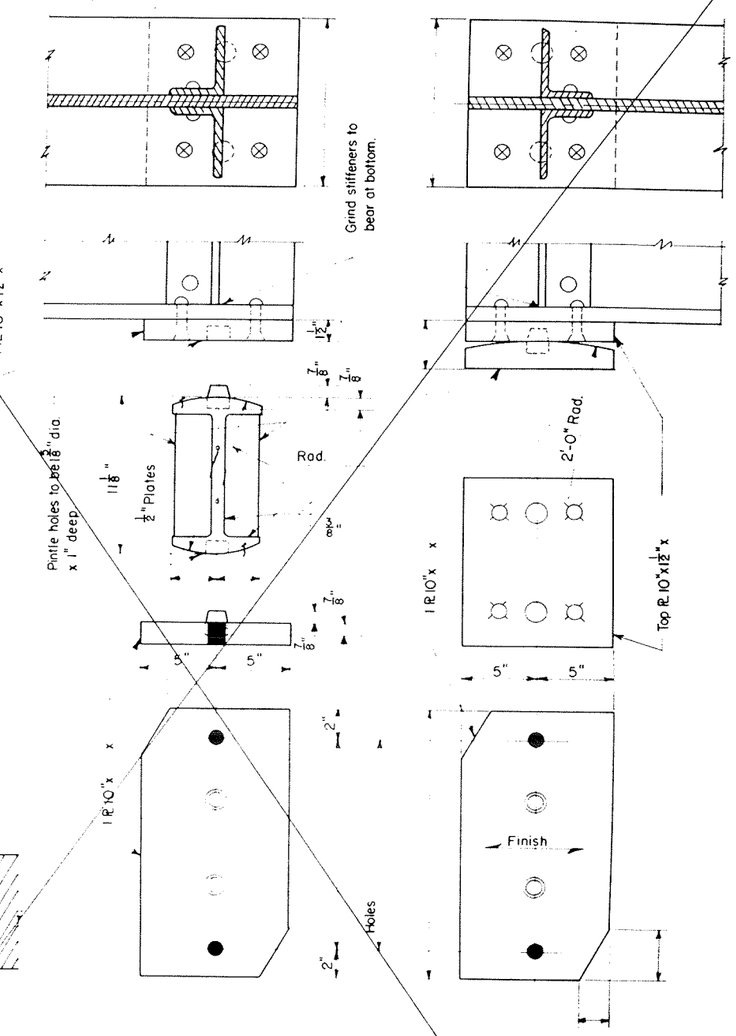

EXPANSION BEARING
No. Req'd. ____

FIXED BEARING
No. Req'd. ____

DETAIL OF BEARINGS
Rocker may be built from plates equal in thickness to designated WF Section

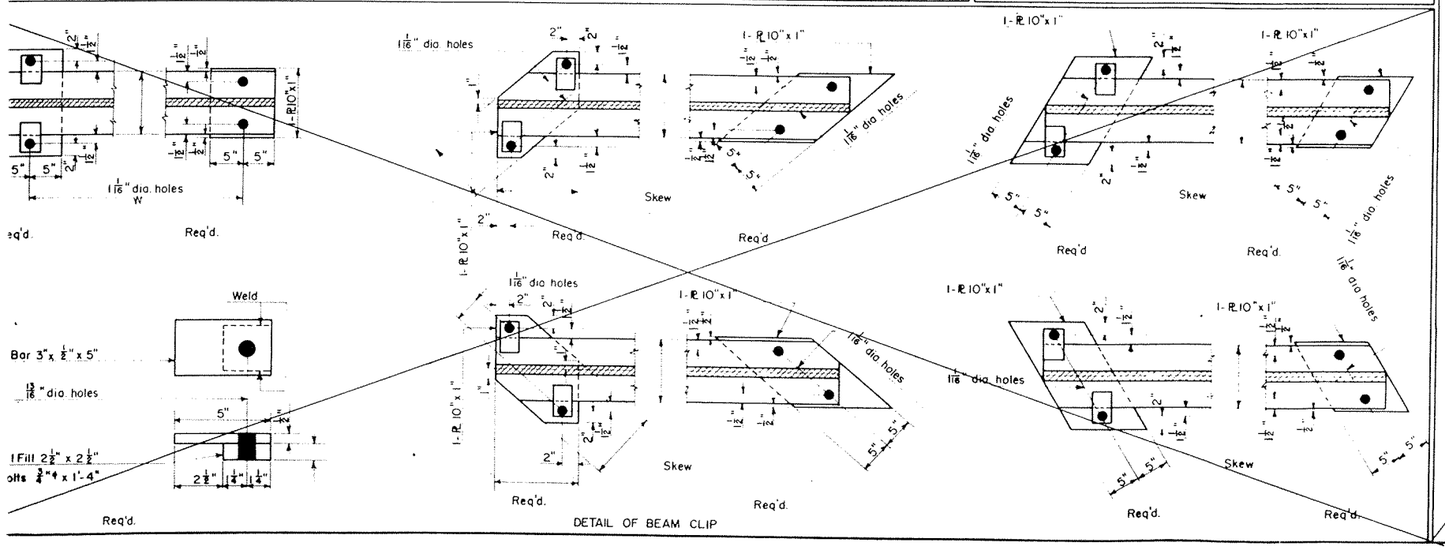

DETAIL OF BEAM CLIP

STRUCTURE NO. M-9-B

COLORADO
DEPARTMENT OF HIGHWAYS

MISCELLANEOUS BRIDGE DETAILS

Across Rio Grande River
Sta. 500+60.00 to 502+36.90
Near Wagon Wheel Gap Sec. 26 T. 41 N R. 1E

Designed by GET Made by JJB Checked by	Approved by [signature] Bridge Engineer Date: Oct. 7, 1957