STATE OF COLORADO
STATE DEPARTMENT OF HIGHWAYS
DIVISION OF HIGHWAYS:
D. O. H. FORM NO. 117:
REV. APR. 1966

AS CONSTRUCTED		
NO REVISIONS	REVISED 6-12-94	VOID

FEDERAL ROAD REGION NO.	DIVISION	PROJECT NUMBER	SHEET NUMBER
VIII	COLORADO	BRS 0149(10)	13

REVISIONS	

GENERAL NOTES

STRUCTURE EXCAVATION AND BACKFILL ~~SHALL BE~~ were IN ACCORDANCE WITH STANDARD M-206-2 AND AS SHOWN IN THE PLANS.

EXPANSION JOINT MATERIAL ~~SHALL~~ MEET AASHTO SPECIFICATION M-213.

THE COLOR OF STRUCTURAL CONCRETE COATING FINISH ~~SHALL BE~~ was FEDERAL STANDARD NO. 36595 (PEARL GRAY) AS SELECTED BY THE ENGINEER FROM TEST PANELS SUBMITTED BY THE CONTRACTOR. (2)

GRADE 60 REINFORCING STEEL ~~IS~~ was REQUIRED.

THE FOLLOWING TABLE GIVES THE MINIMUM LAP SPLICE LENGTH FOR REINFORCING BARS:

BAR SIZE	#4	#5	#6	#7	#8	#9	#10	#11
SPLICE LENGTH FOR CLASS D CONCRETE	1'-3"	1'-6"	1'-10"	2'-2"	2'-10"	3'-7"	4'-7"	5'-7"

WHEN THE CONTRACTOR ELECTS TO SUBSTITUTE EPOXY COATED REINFORCEMENT FOR BLACK STEEL BARS THE MINIMUM LAP SPLICE ~~SHALL BE~~ was AS DESCRIBED ABOVE. (2)

THE CONTRACTOR ~~SHALL BE~~ was RESPONSIBLE FOR THE STABILITY OF THE STRUCTURE DURING CONSTRUCTION.

E.F. = EACH FACE
F.F. = FAR FACE
N.F. = NEAR FACE

FOR STRUCTURE NUMBER INSTALLATION, SEE STANDARD S-614-12.

THE FOLLOWING STRUCTURAL STEEL ~~SHALL BE~~ were AASHTO M-183 (ASTM A-36): PIER NOSE ANGLES.

THE INFORMATION SHOWN ON THESE DRAWINGS CONCERNING TYPE AND LOCATION OF UNDERGROUND UTILITIES IS NOT GUARANTEED TO BE ACCURATE OR ALL INCLUSIVE. THE CONTRACTOR IS RESPONSIBLE FOR MAKING THE DETERMINATION AS TO THE TYPE AND LOCATION OF UNDERGROUND UTILITIES AS MAY BE NECESSARY TO AVOID DAMAGE THERETO. (2)

STAY-IN-PLACE FORMS ~~MAY BE~~ was USED.

DESIGN OF COFFER DAMS BY THE CONTRACTOR TO FACILITATE CONSTRUCTION ~~SHALL BE~~ was APPROVED BY THE ENGINEER.

Designed By	INITIAL	DATE	J.S.V.	05-92
Checked By	J.A.A.	03-91	J.A.A.	02-92
Quantities By	J.M.S.	05-92	J.S.V.	07-92
Checked By	J.D.	03-91		

DESIGN DATA

CURRENT AASHTO SPECIFICATIONS, FOURTEENTH EDITION AND INTERIMS

LIVE LOAD: AASHTO HS-20-44 AND INTERSTATE ALTERNATE
DEAD LOAD: ASSUMES 48 LBS. PER SQ. FT. FOR BITUMINOUS PAVEMENT AND 5 LBS. PER SQ. FT. FOR STAY-IN-PLACE FORMS
DESIGN METHOD: SERVICE LOAD DESIGN

REINFORCED CONCRETE:

CLASS D CONCRETE: f_c = 1800 psi, n = 8, f'_c = 4500 psi

REINFORCING STEEL: f_s = 24,000 psi, f_y = 60,000 psi

STRUCTURAL STEEL: AASHTO M-183 (ASTM A-36) f_s = 20,000 psi

PRESTRESSED CONCRETE: f'_s = 270,000 psi
f'_c = (SEE DETAILS)

SUMMARY OF QUANTITIES

ITEM			SUPER-STRUCTURE	ABUT. 1	PIER 2	PIER 3	ABUT. 4	APPR. SLAB	TOTAL	BK	PG
202	REMOVAL OF BRIDGE	EA							1		
206	STRUCTURE EXCAVATION	CU YD		138 ~~135~~	192 ~~275~~	304 ~~275~~	17 ~~90~~		651 ~~775~~	1	195
206	STRUCTURE BACKFILL (SPECIAL) (FLOW-FILL)	CU YD		151 ~~155~~			148 ~~160~~		299 ~~315~~	1	200
206	STRUCTURE BACKFILL (CLASS 1)	CU YD		42 ~~55~~			44 ~~55~~		86 ~~110~~	1	205
206	STRUCTURE BACKFILL (CLASS 2)	CU YD			145 ~~85~~	249 ~~85~~			394 ~~170~~	1	210
403	HOT BITUMINOUS PAVMENT (GRADING C)	TON	168						168		
502	STEEL PILING (HP 12 x 74)	LIN FT		401 ~~344~~	942 ~~918~~	940 ~~891~~	402 ~~352~~		2,685 ~~2,505~~	1	220
502	PILE TIP	EA		6	18	18	6		48	1	215
509	STRUCTURAL STEEL (GALVANIZED)	LB			300	300			600	1	225
515	WATERPROOFING (MEMBRANE)	SQ YD	1,527						1,527		
518	BRIDGE EXPANSION DEVICE (0-4 INCH)	LIN FT						105	105	1	230
601	STRUCTURAL CONCRETE COATING	SQ FT	6,966 ~~6,887~~	511 ~~478~~	1,196 ~~894~~	1285 ~~942~~	529 ~~478~~		10,487 ~~9,679~~	1	240
601	CONCRETE CLASS D (BRIDGE)	CU YD	429	55	103	106	56	66	815	1	235
602	REINFORCING STEEL	LB	102,975	7,145	16,000	16,000	7,145	9,995	159,260	1	245
605	6 INCH PERFORATED PIPE UNDERDRAIN	LIN FT		55			55		110	1	250
605	GEOCOMPOSITE DRAIN	SQ YD		35			35		70	1	255
605	SUBSURFACE DRAIN OUTLET	LIN FT		25			25		50	1	260
606	BRIDGE RAIL TYPE 10	LIN FT	705						705	1	265
613	CONDUIT (INSTALL ONLY)	LIN FT	755						755	1	270
618	PRESTRESSED CONCRETE UNIT (I SECTION) (100 TO 105 FEET)	EACH	18						18	1	275
626	MOBILIZATION	L S							00.5	1	280

(1) INCLUDES BOTH APPROACH SLABS
(2) FUTURE (FOR INFORMATION ONLY)

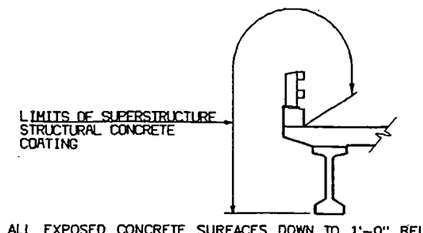

ALL EXPOSED CONCRETE SURFACES DOWN TO 1'-0" BELOW FINISHED GRADE SHALL BE FINISHED WITH CLASS 1 FINISH, FOLLOWED BY AN APPLICATION OF COLORED COATING MEETING THE REQUIRMENTS IN SPECIAL PROVISION REVISION OF SECTION 601, STRUCTURAL CONCRETE COATING AND AS SHOWN ON THE PLANS.

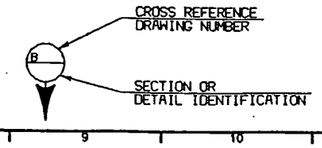

INDEX OF DRAWINGS

DWG. NO. B 1 GENERAL INFORMATION - SUMMARY OF QUANTITIES
DWG. NO. B 2 GENERAL LAYOUT
DWG. NO. B 3 ENGINEERING GEOLOGY
DWG. NO. B 4 BRIDGE HYDRAULIC INFORMATION
DWG. NO. B 5 BRIDGE HYDRAULIC INFORMATION
DWG. NO. B 6 CONSTRUCTION LAYOUT
DWG. NO. B 7 PILING LAYOUT
DWG. NO. B 8 ABUTMENT 1 AND 4 DETAILS
DWG. NO. B 9 WINGWALL DETAILS
DWG. NO. B10 PIER 2 AND 3 DETAILS
DWG. NO. B11 PIER 2 AND 3 DETAILS
DWG. NO. B12 SUPERSTRUCTURE DETAILS
DWG. NO. B13 COLORADO G-54 GIRDER
DWG. NO. B14 ALTERNATE DIAPHRAGM DETAILS
DWG. NO. B15 BRIDGE RAIL TYPE 10
DWG. NO. B16 BRIDGE RAIL TYPE 10
DWG. NO. B17 BRIDGE RAIL TYPE 10
DWG. NO. B18 APPROACH SLAB DETAILS
DWG. NO. B19 STRUCTURE BACKFILL (SPECIAL) (FLOW-FILL)
DWG. NO. B20 BRIDGE DECK ELEVATIONS
DWG. NO. B21 BRIDGE DECK ELEVATIONS
DWG. NO. B22 ROADWAY APPROACHES

BRIDGE DESCRIPTION

3 SPAN (102'-11½" X 102'-11½" X 102'-11½") BRIDGE, CONCRETE SLAB AND GIRDER, CONTINUOUS PRESTRESSED

S.H. 149 OVER RIO GRANDE RIVER

40'-0" ROADWAY CURB TO CURB. 50° 00'00" SKEW
1'-3" CURBS, BRIDGE RAIL TYPE 10

DIVISION OF HIGHWAYS		
GENERAL INFORMATION SUMMARY OF QUANTITIES		
153+94.31 to 157+10.80		
Near South Fork Sec 33	T 40 N	R 3 E
Designer J. Anderson	Structure Numbers	N-10-W
Detailer J. DiGiallonardo		
Drawing Number B 1 of 22		Drawings

Revision Dates				(Preliminary Stage Only)			

04/93 WILSON:::(USER/01200/USER/JEANETTE)W10WZERO

STATE OF COLORADO
STATE DEPARTMENT OF HIGHWAYS
DIVISION OF HIGHWAYS:
P. O. H. FORM NO. 117:
REV. APR. 1986

AS CONSTRUCTED			
NO REVISIONS 6-12-94	REVISED	VOID	

FEDERAL ROAD REGION NO.	DIVISION	PROJECT NUMBER	SHEET NUMBER
VIII	COLORADO	BRS 0149(10)	14

REVISIONS		

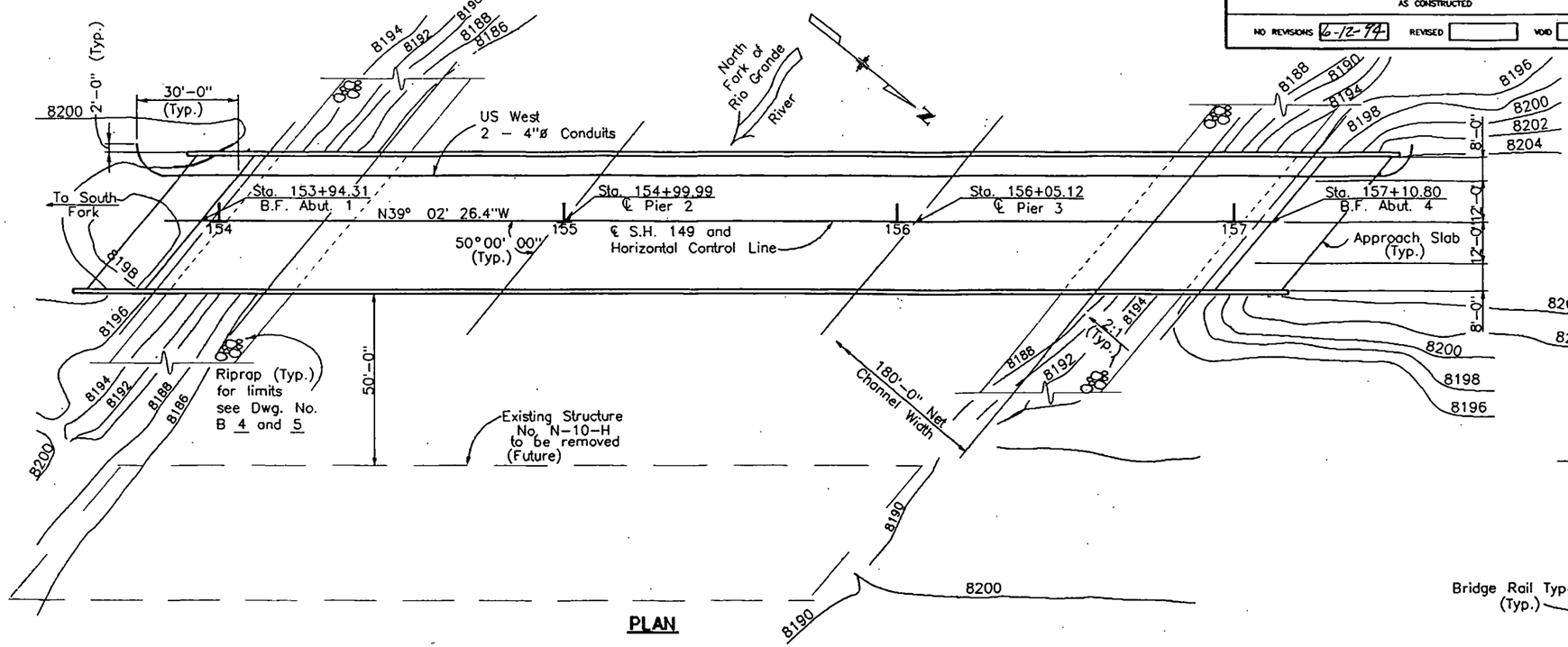

PLAN

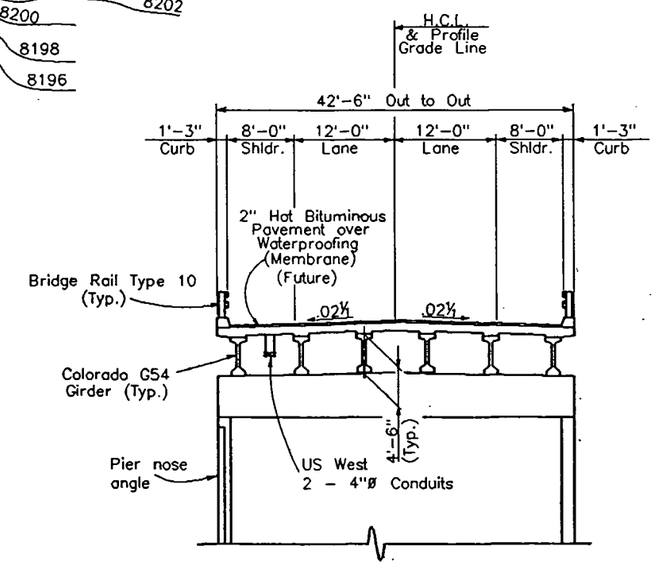

TYPICAL SECTION

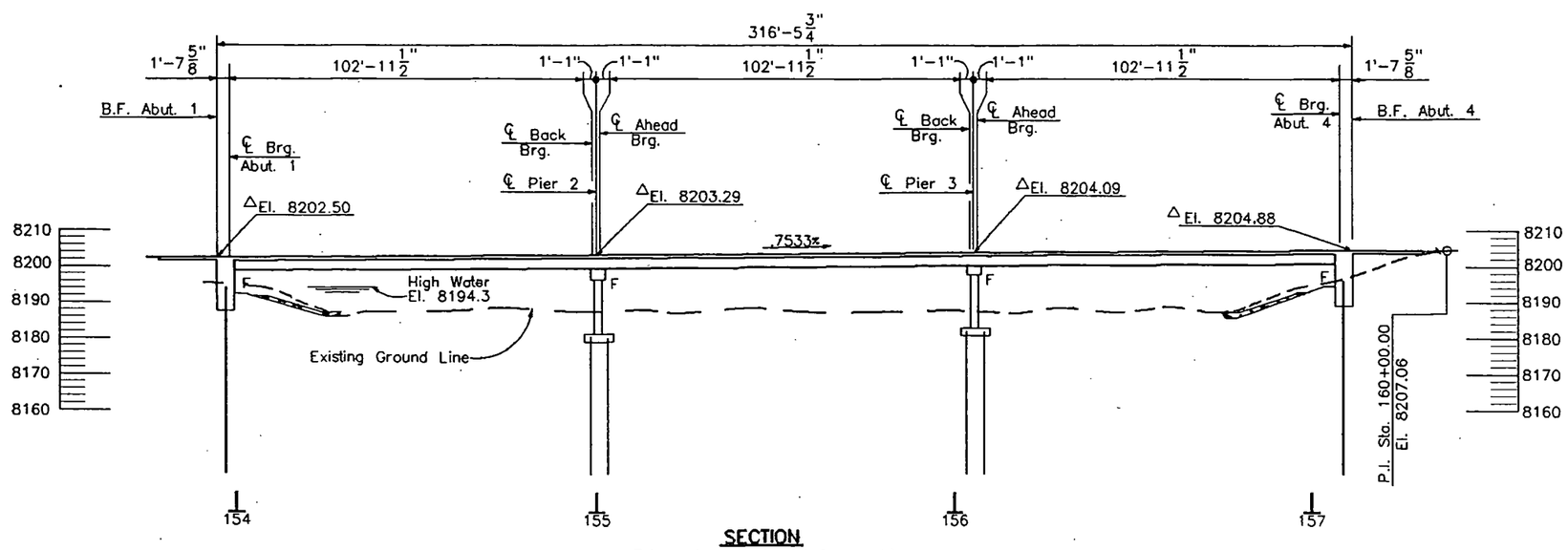

SECTION
Taken along Horizontal Control Line
△Finished Grade Elevation

Live Loading = HS20-44 and Alternate Military Loading

DIVISION OF HIGHWAYS		
GENERAL LAYOUT		
Designer J. Anderson	Structure Numbers	N-10-W
Detailer J. DiGiallonardo		
Drawing Number B 2 of 22		Drawings

Revision Dates	(Preliminary Stage Only)						

INITIAL	DATE	Designed By	Checked By	J.S.V.	05-92
J.A.A.	03-91	Checked By	Quantities By	J.A.A.	02-92
J.M.S.	03-92	Detailed By	Checked By	J.S.V.	07-92
J.D.	03-91				

10/28/93 WILSON:::(USER/01200/USER/JEANETTE)N10WGENERAL

STATE OF COLORADO
STATE DEPARTMENT OF HIGHWAYS
DIVISION OF HIGHWAYS:
D. O. H. FORM NO. 117:
REV. APR. 1986

AS CONSTRUCTED			
NO REVISIONS 6-12-94	REVISED		VOID

FEDERAL ROAD REGION NO.	DIVISION	PROJECT NUMBER	SHEET NUMBER
VIII	COLORADO	BRS 0149(10)	18

REVISIONS		

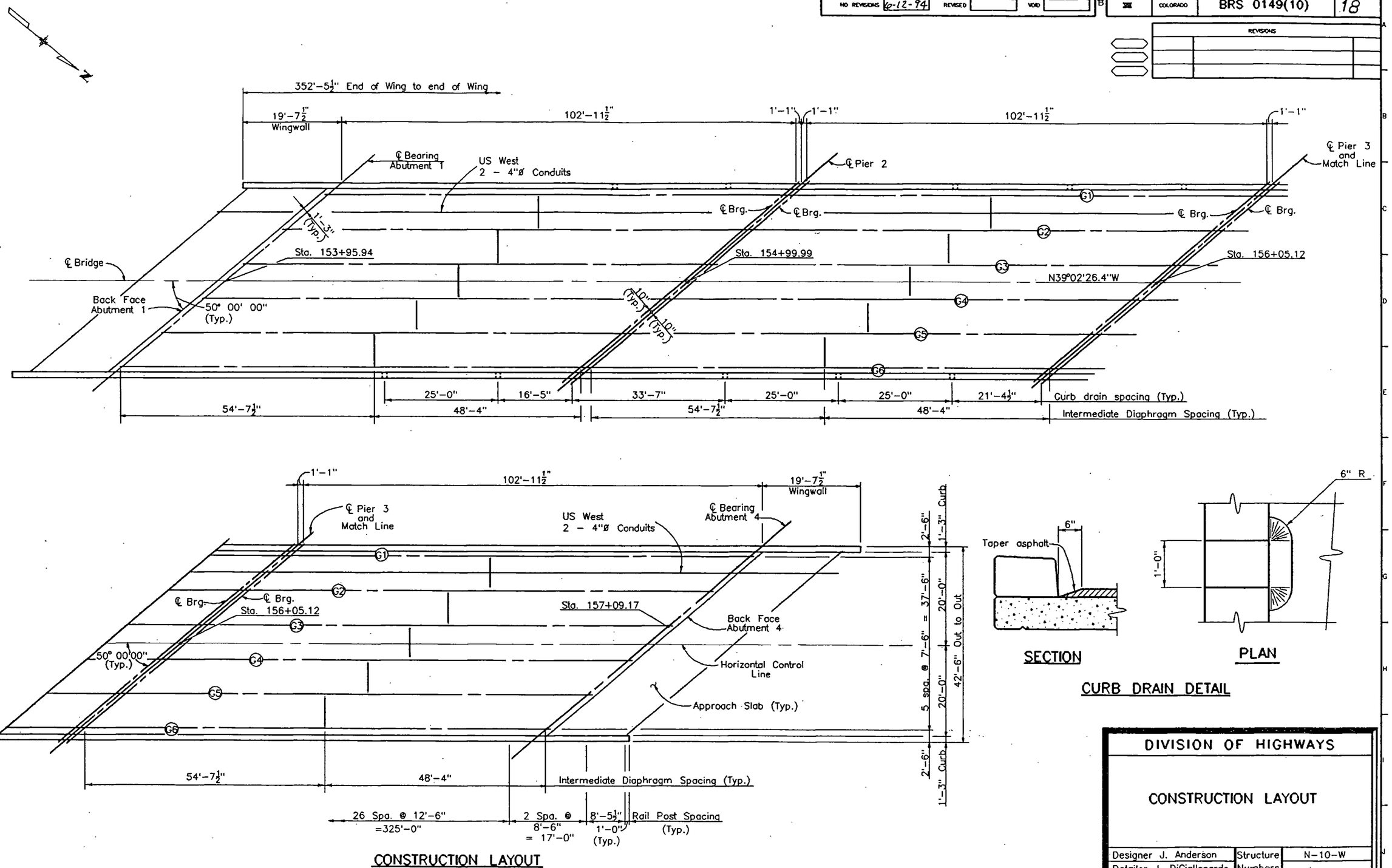

INITIAL	DATE		INITIAL	DATE
Designed By	J.A.A.	05-91	Checked By	J.S.V. 05-92
Checked By	J.M.S.	05-92	Quantities By	J.A.A. 02-92
Detailed By	J.D.	05-91	Checked By	J.S.V. 07-92

DIVISION OF HIGHWAYS

CONSTRUCTION LAYOUT

Designer J. Anderson	Structure Numbers	N-10-W
Detailer J. DiGiallonardo		
Drawing Number B 6 of 22 Drawings		

Revision Dates (Preliminary Stage Only)

3/93 WILSON:::(USER/01200/USER/JEANETTE)N10WCONST

STATE OF COLORADO
STATE DEPARTMENT OF HIGHWAYS
DIVISION OF HIGHWAYS
D. O. H. FORM NO. 117
REV. APR. 1986

AS CONSTRUCTED			BRIDGE	FEDERAL ROAD REGION NO.	DIVISION	PROJECT NUMBER	SHEET NUMBER
NO REVISIONS 6-12-94	REVISED	VOID			COLORADO	BRS 0149(10)	20

REVISIONS		

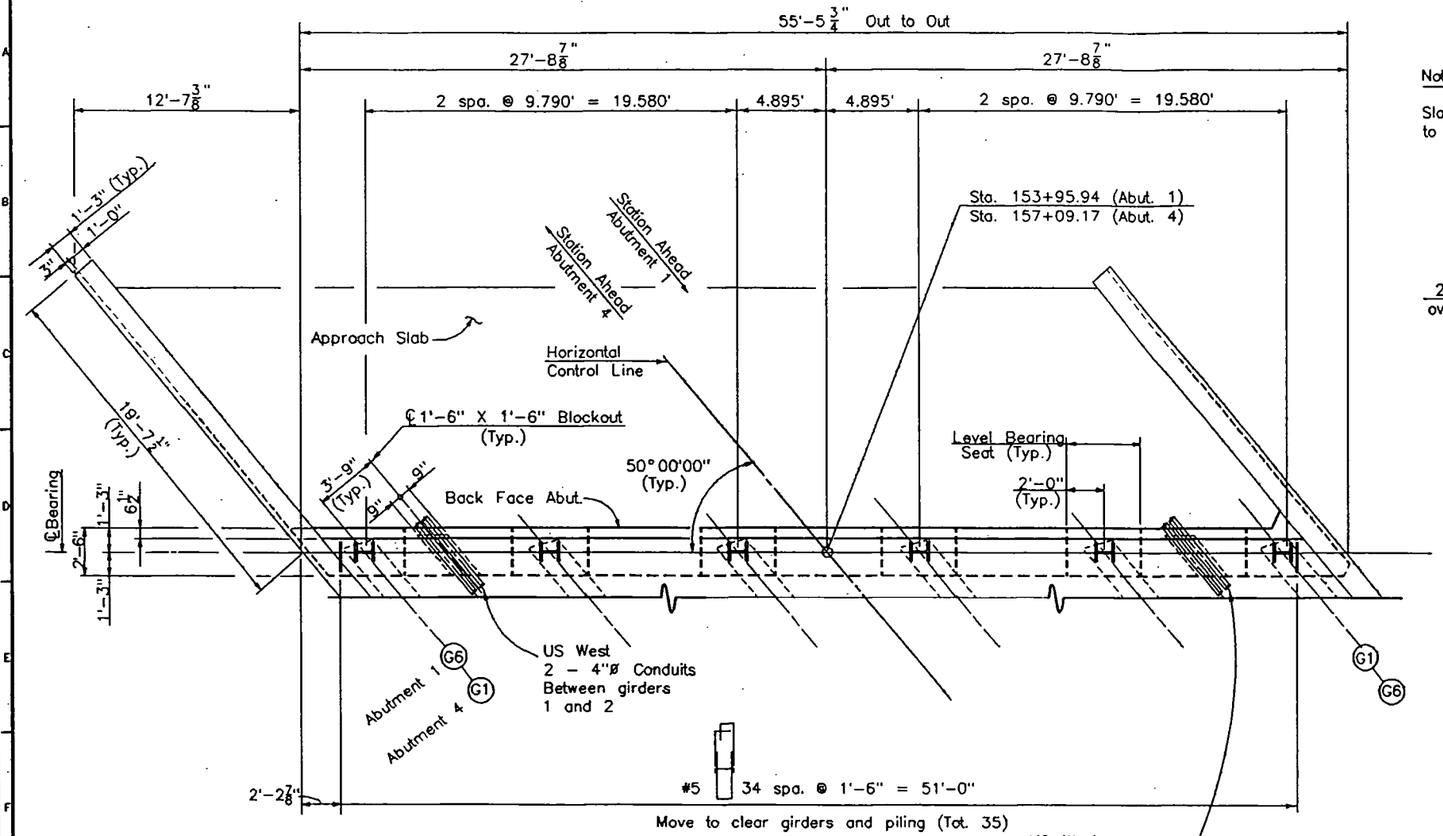

PLAN

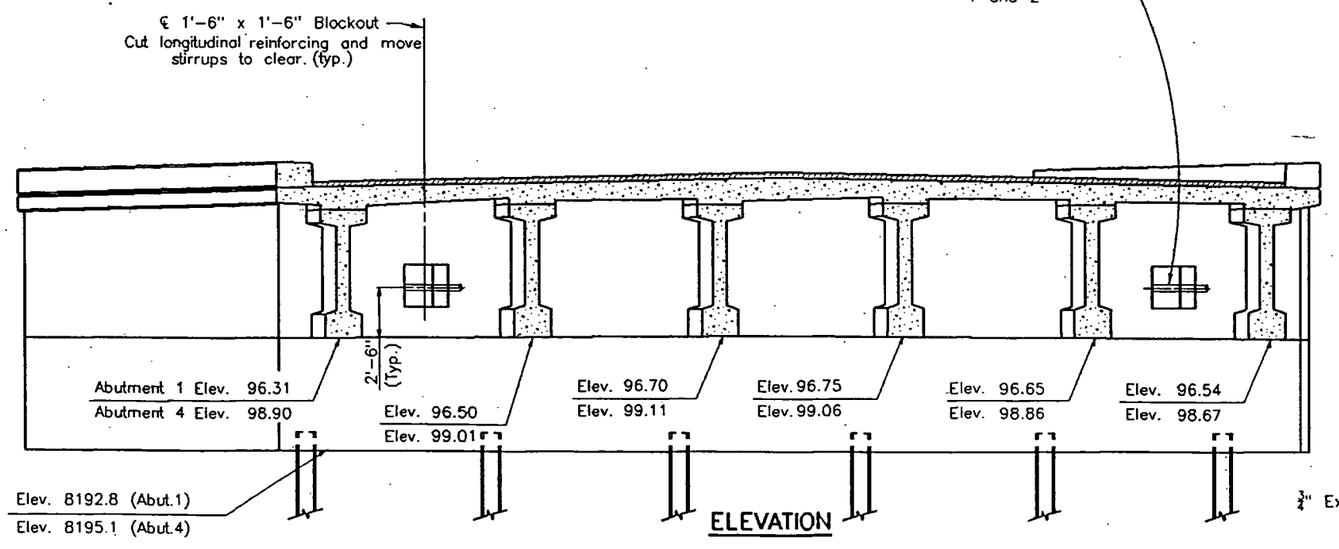

ELEVATION

Note:

Slab and portion of abutment above bearing seat to be poured monolithically.

#6 X 3'-8" Spa. @ 1'-6"
Proj. 1'-0" Min. (Tot. 27)
See Approach Slab Details, Dwg. No. B 18 .

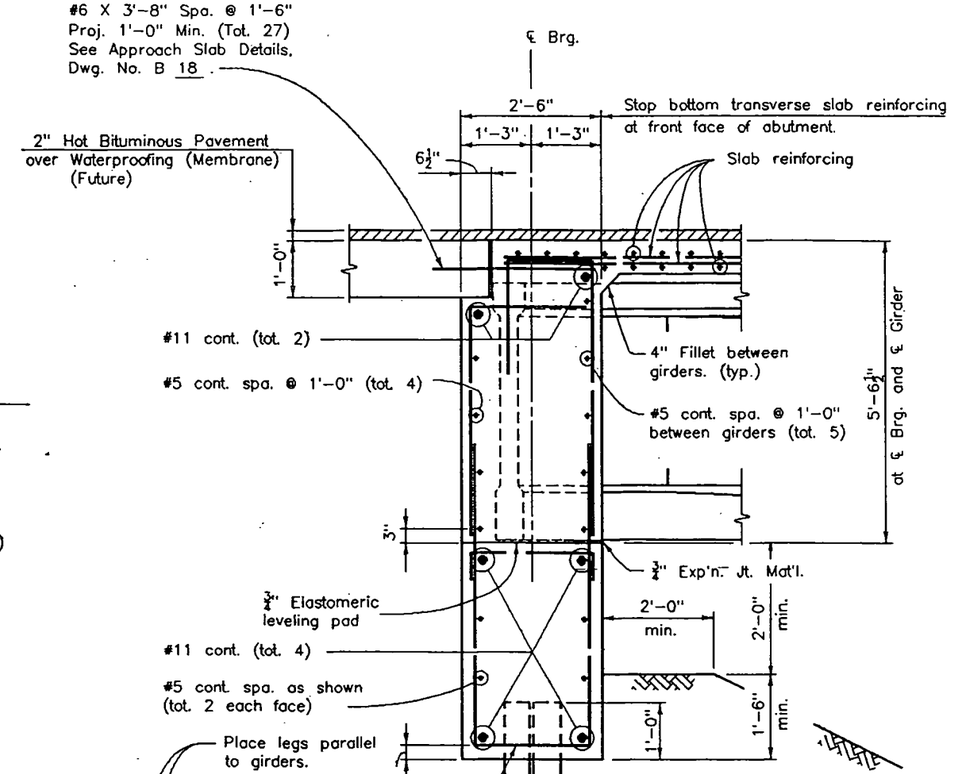

TYPICAL SECTION

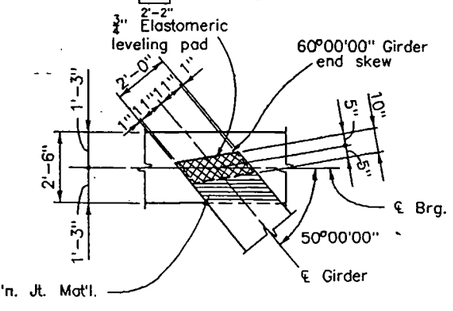

BEARING DETAIL

Notes:

For wingwall details, see Dwg. No. B 9 .

For blockout detail, see Dwg. No. B 9 .

Designed By	JAK	04-91	Checked By	J.S.V.	05-92
Checked By	J.M.S.	05-92	Quantities By	JAA	02-92
Detailed By	JD	04-91	Checked By	J.S.V.	07-92

DIVISION OF HIGHWAYS

ABUTMENT 1 AND 4 DETAILS

Designer J. Anderson	Structure Numbers	N-10-W
Detailer J. DiGiallonardo		
Drawing Number B 8 of 22		Drawings

Revision Dates	(Preliminary Stage Only)						

:/93 WILSON:::(USER/01200/USER/JEANETTE)N10WABUT

STATE OF COLORADO
STATE DEPARTMENT OF HIGHWAYS
DIVISION OF HIGHWAYS:
D. O. H. FORM NO. 117;
REV. APR. 1986

AS CONSTRUCTED				FEDERAL ROAD REGION NO.	DIVISION	PROJECT NUMBER	SHEET NUMBER
NO REVISIONS		REVISED 6-12-94	VOID	VIII	COLORADO	BRS 0149(10)	24

REVISIONS	

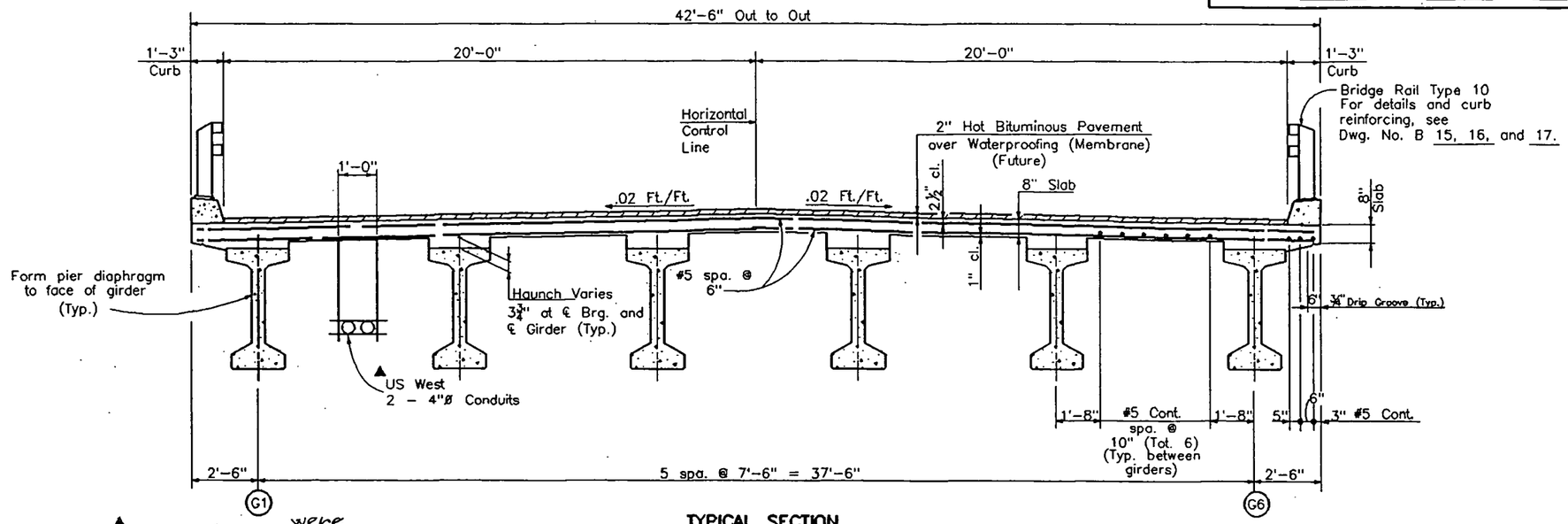

▲ Hangers and conduit ~~will be~~ were supplied by US West. Contractor will install only. Concrete inserts ~~shall be~~ was 1"ø spaced at 10'-0" centers, and ~~shall be~~ was capable of supporting 2,000 lbs. each.
Expansion joints ~~shall be~~ was spaced at 95'-0" centers max.

TYPICAL SECTION

Top longitudinal reinforcing not shown.
See Part Slab Plan.

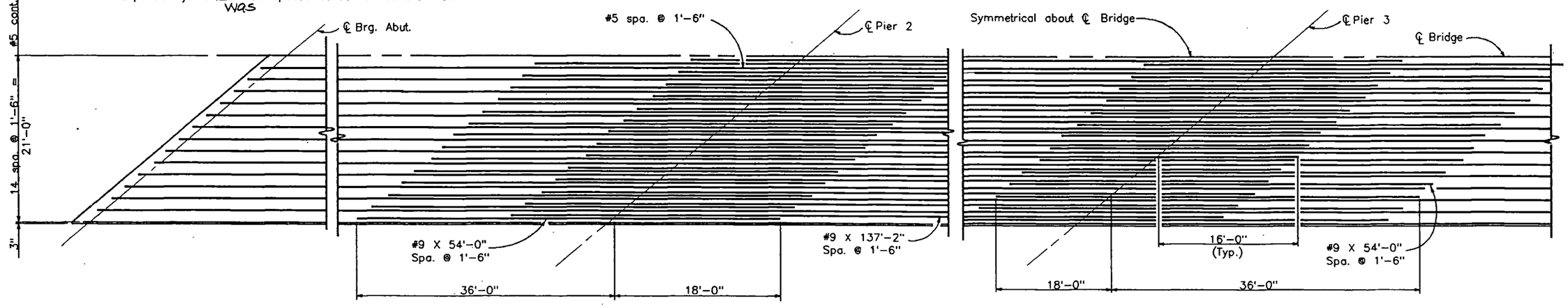

PART SLAB PLAN

Bottom longitudinal reinforcing not shown.
See Typical Section.

$\frac{56}{6\ Gir}$ #9 = 9 #9/Gir = 9.00 in²

$\frac{28}{6\ Gir}$ #5 = 5 #5/Gir = 1.55

10.55 in²

INITIAL	DATE				
Designed By	J.A.A.	04-91	Checked By	J.V.	05-92
Checked By	J.M.S.	05-92	Quantities By	J.A.A.	02-92
Detailed By	J.D.	04-91	Checked By	J.S.V.	07-92

DIVISION OF HIGHWAYS

SUPERSTRUCTURE DETAILS

Designer J. Anderson	Structure Numbers	N-10-W	
Detailer J. DiGiallonardo			
Drawing Number B 12 of 22		Drawings	

Revision Dates (Preliminary Stage Only)

...:/93 WILSON::(USER/01200/USER/JEANETTE)N10WSUPER

STATE OF COLORADO
STATE DEPARTMENT OF HIGHWAYS
DIVISION OF HIGHWAYS
B. D. K. FORM NO. 117
REV. APR. 1988

AS CONSTRUCTED			
NO REVISIONS 6-12-94	REVISED		VOID

FEDERAL ROAD REGION NO.	DIVISION	PROJECT NUMBER	SHEET NUMBER
VIII	COLORADO	BRS 0149(10)	27

REVISIONS		

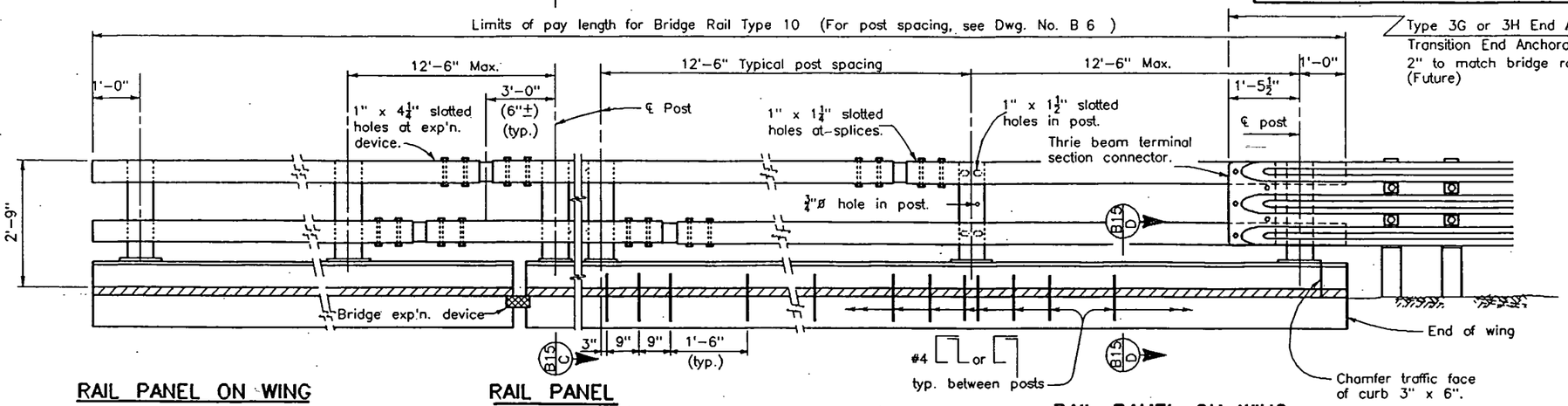

RAIL PANEL ON WING TERMINAL SECTION

(See Roadway plans for ends not attached to Guard Rail.)

RAIL PANEL AT EXPANSION DEVICE

ELEVATION – BRIDGE RAIL

RAIL PANEL ON WING TRANSITION SECTION

(See roadway plans for ends requiring attachment to guard rail.)

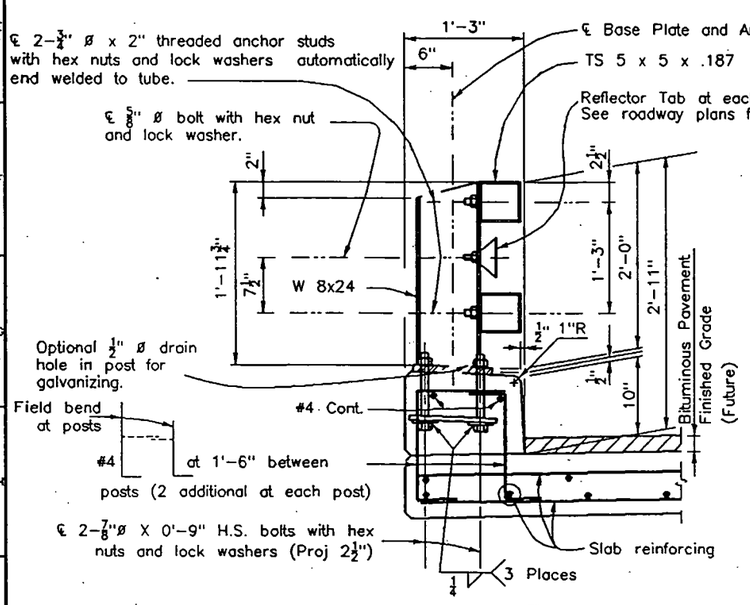

SECTION (B15/C)

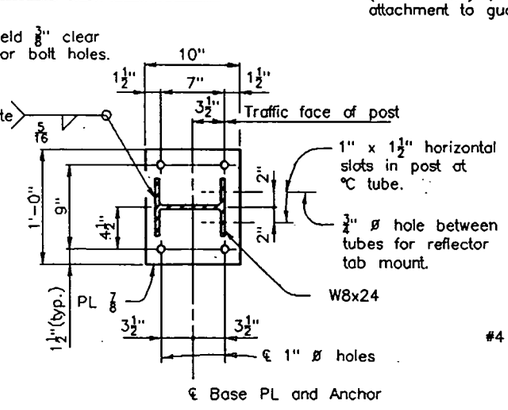

PLAN – POST DETAIL

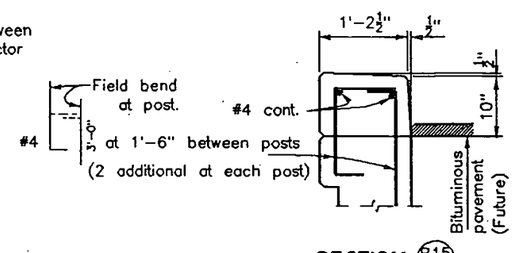

SECTION (B15/D)

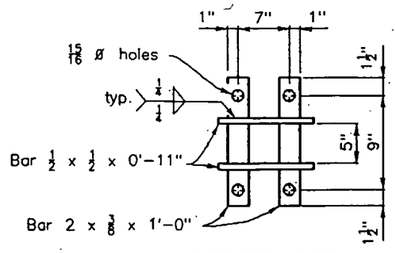

ANCHOR DETAIL

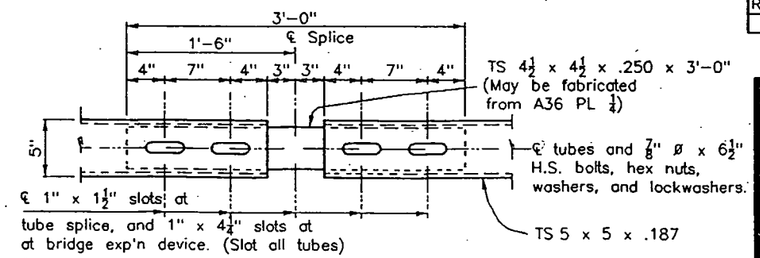

Stagger top and bottom splices into different post spacings except at expansion joint, place at opposite ends of same post space. (Range of motion = 1'-0" at bridge. expansion device.)

PLAN – TUBE SPLICE

Notes:

All tubes shall be fabricated from ASTM A-500 Grade B.
All posts shall be fabricated from ASTM A-36 steel.

The above material and all anchor bolts and miscellaneous bolts, nuts, and washers shall be galvanized after fabrication in accordance with the specifications.

Post anchor, encased in concrete, shall be ASTM A-36 or AASHTO M-169 steel and need not be galvanized.

The tubes shall be shop bent or fabricated to fit horizontal curve when radius is less than 1,500 feet.

Tubes shall be continuous over not less than two posts.

The centerline of the posts at the bridge expansion device shall be a minimum of 3'-0" from the centerline of the bridge expansion device, measured along the centerline of posts.

All bolts that have lock washers shall be tightened to snug only.

Posts shall be perpendicular to the grade of the deck.

One or more 12'-6" post spacings may be reduced (8'-4" min.) in order to maintain dimensions from the end of the wings and expansion joints.

Optional drain hole for galvanizing may be drilled, punched, or clipped leaving smooth surfaces and transitions. No flame cutting or air carbon arc gouging is allowed.

Posts, post anchors, base plates, backing plates, anchor bolts, miscellaneous bolts, nuts, washers, tubes, tube expansion devices; tube splices, end plates, curb concrete (Class D), curb reinforcing steel, and reflector tabs shall be included in Item 606 – Bridge Rail Type 10.

Prior to fabrication of this item, two sets of shop drawings which comply with the requirements of Section 105, shall be submitted to the Division for information only. One set shall be sent to the Colorado Division of Highways, Staff Materials Branch Inspection Unit, 4340 E. Louisiana Avenue, Denver, Colorado 80222. One set shall be sent to the Engineer. The shop drawings will not be approved or returned.

Structural Steel:
AASHTO M-183(ASTM A-36) f_y=36,000 psi
Cold formed ASTM A-500 Grade B f_y=46,000 psi

For additional details see next rail sheets.

INFORMATION ONLY

Description	Unit	Per Lin. Ft.
Structural Steel (Galvanized)	Lb.	33.1
Concrete Class D (Bridge)	Cu.Yd.	.04
Reinforcing Steel (Epoxy Coated)	Lb.	4.0

INITIAL	DATE	Checked By	J.S.V.	05-92
J.A.A.	04-91	Quantities By	J.A.A.	02-92
J.M.S.	05-92	Checked By	J.S.V.	07-92
K.G.S.	04-92			

Designed By	J.A.A.
Checked By	J.M.S.
Detailed By	K.G.S.

DIVISION OF HIGHWAYS

BRIDGE RAIL TYPE 10

Designer J. Anderson	Structure Numbers	N-10-W
Detailer K. Sharpley		
Drawing Number B 15 of 22 Drawings		

Revision Dates (Preliminary Stage Only)						
8-90	11-90	11-91	03-92			

WILSON::(USER/01200/USER/JEANETTE)N10WRAIL1

STATE OF COLORADO
STATE DEPARTMENT OF TRANSPORTATION
CDOT FORM NO. 117
REV.JUNE 1992

AS CONSTRUCTED			
NO REVISIONS		REVISED 6-12-94	VOID

FEDERAL ROAD REGION NO.	DIVISION	PROJECT NUMBER	SHEET NUMBER
VIII	COLORADO	BRS 0149(10)	30

REVISIONS		

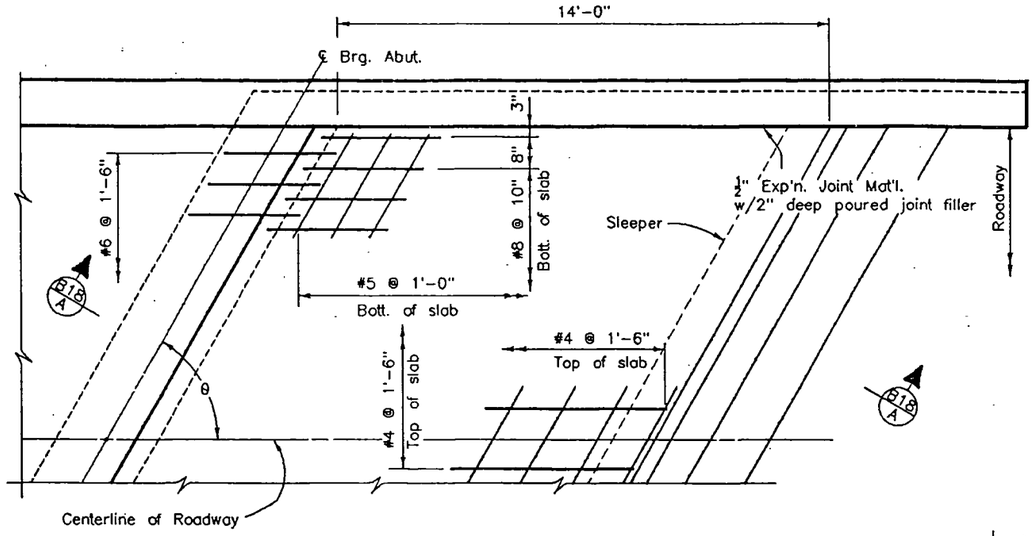

PLAN

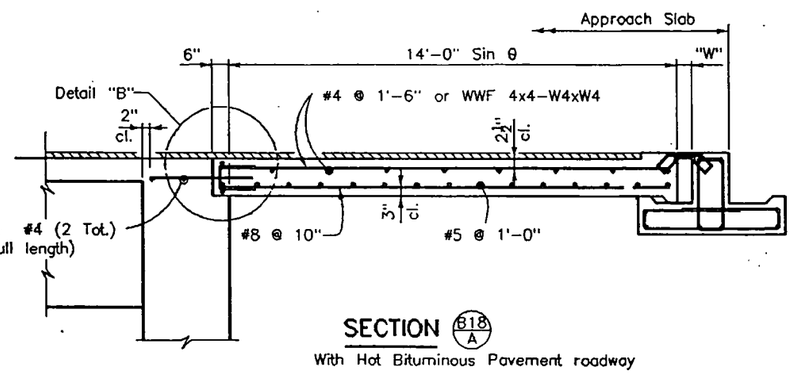

SECTION B18/A

With Hot Bituminous Pavement roadway

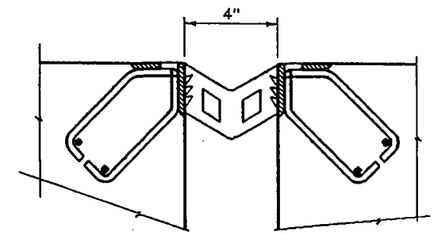

SECTION THRU APPROACH HYDROZO EXPANSION DEVICE

(Similar to Strip Seal except as shown.)

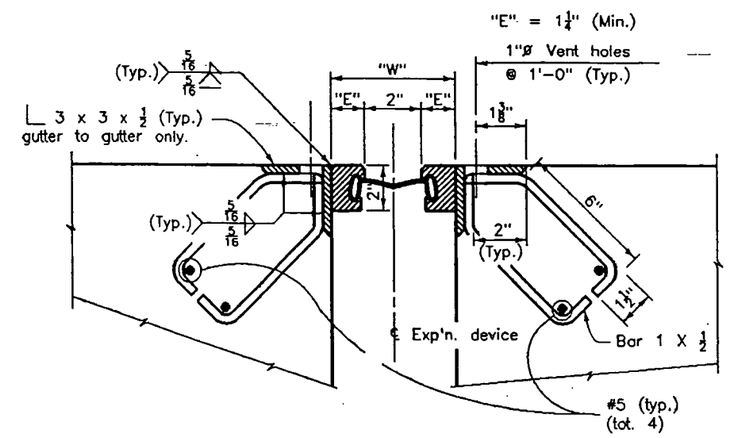

SECTION THRU APPROACH STRIP SEAL EXPANSION DEVICE

Section taken perpendicular to ℄ exp'n device.

NOTES:

Concrete Class D (Bridge) ~~shall be~~ was used for approach slabs.

½" expansion joint material ~~shall~~ meet A.A.S.H.T.O. Spec. M213.

The expansion device ~~shall be~~ was installed on grade, parallel to the slope and grade of the deck.

After the concrete has attained initial set, the attachments used to hold the angle assembly in its proper position ~~shall be~~ was removed.

Do not point steel surfaces in contact with either concrete or seal.

"W" and "E" dimensions are dependent upon the particular expansion device supplied, and ~~shall be~~ was shown on the shop drawings.

The neoprene seal ~~shall be~~ was one piece.

Vent holes ~~shall~~ was not ~~be~~ used for support bolts.

See Special Provisions for epoxy grouting of vent holes.

ACCEPTABLE ALTERNATES

WABO SE400-A3
~~ONFLEX 40SEQ-SA2~~
D.S. BROWN L400-SSA
EPOXY BRG. IND. BS400-A
LENCO L400-W
HYDROZO/JEENE 4" W

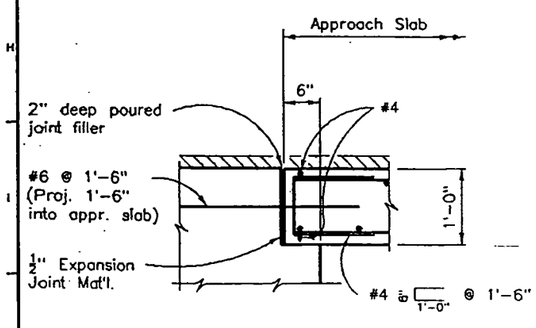

DETAIL "B"

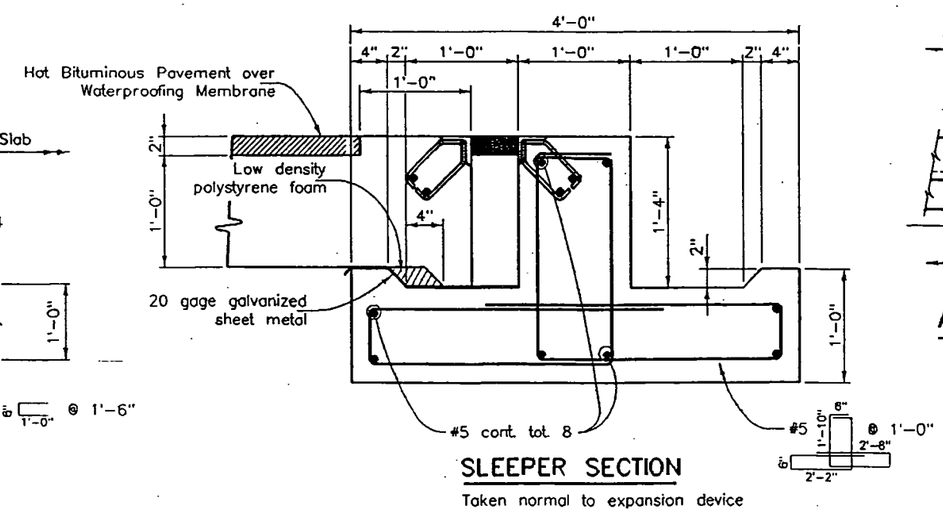

SLEEPER SECTION

Taken normal to expansion device
Sleeper may be precast.

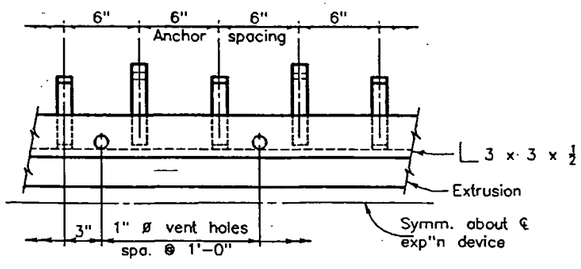

ANCHOR AND VENT HOLE SPACING

INITIAL	DATE		
J.A.A.	04-91	Checked By	J.S.V. 05-92
J.M.S.	05-92	Quantities By	J.A.A. 07-92
K.G.S.	04-92	Checked By	J.S.V. 07-92
Designed By			
Checked By			
Detailed By			

DIVISION OF HIGHWAYS		
APPROACH SLAB DETAILS		
Designer J. Anderson	Structure Numbers	N-10-W
Detailer K. Sharpley		
Drawing Number B 18 of 22 Drawings		

Revision Dates (Preliminary Stage Only)						
12-87	4-90	11-90	8-91	2-92	6-92	

1:26/93 WILSON::(USER/01200/USER/JEANETTE)N10WAPPR