FED. ROAD REG. NO.	DIVISION	PROJECT NO.	SHEET NO.	TOTAL SHEETS
9	COLO.	30111(3)	12	

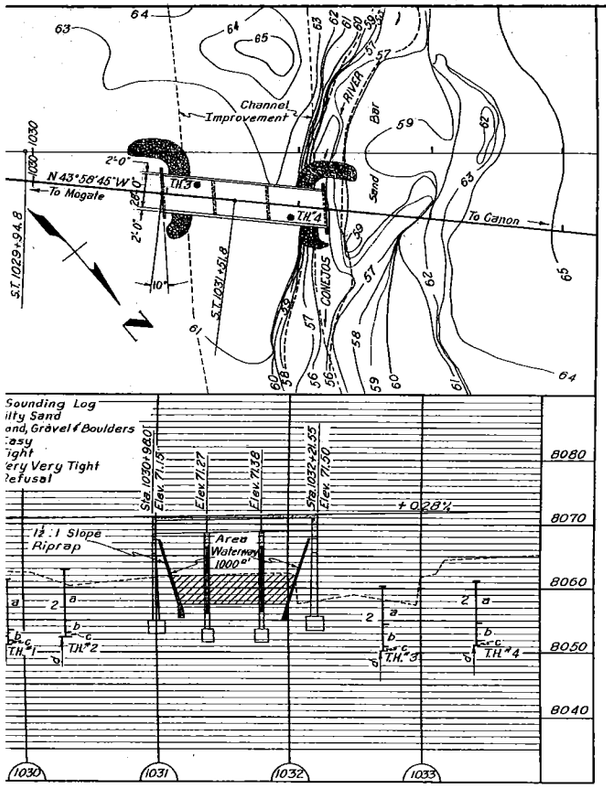

GENERAL LAYOUT

SUMMARY OF QUANTITIES

Description	Unit	Superstructure	Abut. Nº 1	Pier Nº 2	Pier Nº 3	Abut. Nº 4	Total
assified Excavation	Cu.Yd.						*11230
mon Excavation (Str.)	Cu.Yd.		76	37	37	55	205
cture Backfill (Class I)	Cu.Yd.		40	26	26	18	110
hanical Tamping	Hr.		18	3	3	25	49
tion Yard Overhaul	Sta.Yd.						1210
d Mile Overhaul	Yd.Mi.						18
ted Bridge Timber	Mfl.bm.		0.114			0.114	0.228
s "A" Concrete	Cu.Yd.	180.4	9.2	23.1	23.1	9.2	245.0
forcing Steel (Includes 1% ± Overrun)	Lb.	50,445	2,460	5,100	5,100	2,460	65,565
ctural Steel (Includes ½% ± for Paint.)	Lb.	3085		295	295		3675
ap (1'-6" thick)	Cu.Yd.		125			125	250
l Plate Guard Fence (Beam Type)	Lin.Ft.		25			25	50
l Plate Guard Rail (Beam Type)	Lin.Ft.	225					225
n Pipe (Conc. Floor) (4" ϕ x 2'0")	Each	6					6

be used in Roadway Embankments.

BAR LIST SUPERSTRUCTURE

Mark	Size	Nº Req'd	Length	Type	Dimensions ℓ	Dimensions m
401	½" ϕ	276	20'-10"	Str.		
402	½" ϕ	138	20'-8"	Str.		
403	½" ϕ	248	3'-11"	II	1'-1½"	1'-8"
404	½" ϕ	800	6'-10"	III		
416	½" ϕ	120	5'-5"	V	0'-6"	1'-10½"
501	⅝" ϕ	200	32'-3"	Str.		
502	⅝" ϕ	99	33'-3"	I		
801	1" ϕ	32	5'-0"	Str.		
901	1⅛" ϕ	8	32'-3"	Str.		
902	1⅛" ϕ	8	25'-5"	Str.		
1101	1⅜" ϕ	32	41'-0"	Str.		
1102	1⅜" ϕ	16	40'-3"	Str.		
1103	1⅜" ϕ	24	38'-0"	Str.		
1104	1⅜" ϕ	24	34'-0"	Str.		
1105	1⅜" ϕ	24	30'-0"	Str.		
1106	1⅜" ϕ	24	24'-0"	Str.		
1107	1⅜" ϕ	16	10'-0"	Str.		

BAR SUMMARY

15690 Lin.Ft. ½" ϕ @ 0.668#/Lin.Ft. = 10481 Lb.
9742 Lin.Ft. ⅝" ϕ @ 1.043#/Lin.Ft. = 10161 Lb.
160 Lin.Ft. 1" ϕ @ 2.670#/Lin.Ft. = 427 Lb.
461 Lin.Ft. 1⅛" ϕ @ 3.400#/Lin.Ft. = 1567 Lb.
5140 Lin.Ft. 1⅜" ϕ @ 5.313#/Lin.Ft. = 27,309 Lb.
Plus 1% ± for Overrun = 500 Lb.
Total = 50,445 Lb.

BAR LIST ABUTMENT Nº 1 (Abutment Nº 4 the Same)

Mark	Size	Nº Req'd	Length	Type	Dimensions ℓ	Dimensions m
405	½" ϕ	16	11'-4"	IV		
406	½" ϕ	2	37'-9"	Str.		
407	½" ϕ	3	32'-3	Str.		
408	½" ϕ	22	7'-4"	V	1'-8"	1'-8"
409	½" ϕ	14	4'-0"	Str.		
410	½" ϕ	4	3'-7"	Str.		
411	½" ϕ	4	4'-1"	Str.		
412	½" ϕ	4	4'-7"	Str.		
503	⅝" ϕ	44	6'-0"	Str.		
601	¾" ϕ	1	37'-9"	Str.		
602	¾" ϕ	4	10'-2"	VI		
1001	1¼" ϕ	2	37'-9"	Str.		
1002	1¼" ϕ	2	32'-3"	Str.		
1003	1¼" ϕ	2	9'-0"	Str.		
1004	1¼" ϕ	1	18'-0"	Str.		
1108	1⅜" ϕ	8	15'-9"	Str.		
1109	1⅜" ϕ	8	4'-9"	Str.		

BAR SUMMARY ABUT. Nº 1 (Abutment Nº 4 the Same)

620 Lin.Ft. ½" ϕ @ 0.668#/Lin.Ft. = 414 Lb.
264 Lin.Ft. ⅝" ϕ @ 1.043#/Lin.Ft. = 275 Lb.
78 Lin.Ft. ¾" ϕ @ 1.502#/Lin.Ft. = 117 Lb.

176 Lin.Ft. 1¼" ϕ @ 4.303#/Lin.Ft. = 757 Lb.
164 Lin.Ft. 1⅜" ϕ @ 5.313#/Lin.Ft. = 871 Lb.
Plus 1% ± for Overrun = 26 Lb.
Total = 2460 Lb.

BAR LIST PIER Nº 2 (Pier Nº 3 the Same)

Mark	Size	Nº Req'd	Length	Type	Dimensions ℓ	Dimensions m
408	½" ϕ	13	7'-4"	V	1'-8"	1'-8"
413	½" ϕ	45	10'-2"	V	1'-9"	3'-0"
414	½" ϕ	12	17'-8"	Str.		
415	½" ϕ	22	10'-9"	Str.		
417	½" ϕ	13	8'-0"	VII		
503	⅝" ϕ	44	6'-0"	Str.		
504	⅝" ϕ	2	27'-9"	Str.		
701	⅞" ϕ	2	19'-0"	Str.		
1005	1¼" ϕ	2	27'-9"	Str.		
1006	1¼" ϕ	6	9'-0"	Str.		
1109	1⅜" ϕ	9	4'-9"	Str.		
1110	1⅜" ϕ	9	15'-0"	Str.		

BAR SUMMARY PIER Nº 2 (Pier Nº 3 the Same)

1105 Lin.Ft. ½" ϕ @ 0.668#/Lin.Ft. = 738 Lb.
2696 Lin.Ft. ⅝" ϕ @ 1.043#/Lin.Ft. = 2812 Lb.
38 Lin.Ft. ⅞" ϕ @ 2.044#/Lin.Ft. = 78 Lb.
110 Lin.Ft. 1¼" ϕ @ 4.303#/Lin.Ft. = 473 Lb.
178 Lin.Ft. 1⅜" ϕ @ 5.313#/Lin.Ft. = 946 Lb.
Plus 1% ± for Overrun = 53 Lb.
Total = 5100 Lb.

BAR BENDING DIAGRAMS

Note: Dimensions are out to out of the bar.

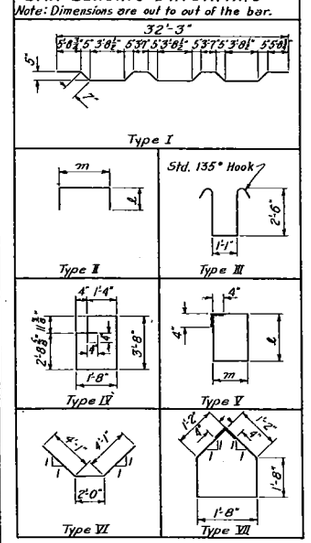

GENERAL NOTES

ALL WORK SHALL BE DONE ACCORDING TO THE STANDARD SPECIFICATIONS OF THE COLORADO DEPARTMENT OF HIGHWAYS APPLICABLE TO THE PROJECT.
ALL CONCRETE SHALL BE CLASS "A" AND AIR ENTRAINED AS SPECIFIED.
ALL CONCRETE SURFACES EXPOSED TO NORMAL VIEW BY HIGHWAY TRAFFIC SHALL RECEIVE CLASS I SURFACE FINISH.
CONCRETE GIRDERS, FLOOR SLABS, AND CURBS SHALL BE POURED MONOLITHICALLY.
FORMS FOR CONCRETE SURFACES EXPOSED IN THE FINISHED WORK SHALL BE CONSTRUCTED OF SHIPLAP OR TONGUE AND GROOVE LUMBER S 3 S UNLESS FACED WITH PANEL BOARD.
FOOTINGS IN ROCK SHALL BE POURED OUT TO ROCK AND NOT FORMED.
SOUNDINGS AND DEPTH OF FOOTING SHOWN ARE IN ACCORDANCE WITH THE BEST AVAILABLE DATA AND WHEN DIFFERENT CONDITIONS ARE ENCOUNTERED THE BRIDGE ENGINEER WILL INSPECT AND DETERMINE IF REDESIGN IS NECESSARY.
ALL REINFORCING STEEL SHALL CONFORM TO ASTM SPECIFICATION A 305-56T OR THE LATEST REVISION THEREOF, AND SHALL BE INTERMEDIATE GRADE STEEL OF A DEFORMED TYPE. EACH BAR SHALL BE TAGGED WITH THE NUMBER DESIGNATION AND THE STATION NUMBER OF THE PROJECT. PRIMARY BARS SHALL NOT BE SPLICED AND SECONDARY BARS WHEN SPLICED SHALL LAP 30 DIAMETERS OF THE BAR. DIMENSIONS FOR REINFORCING STEEL NOT SHOWN AS CLEAR SHALL BE TO THE CENTER LINE OF THE BAR.
ALL STRUCTURAL STEEL SHALL BE PAINTED ONE SHOP COAT OF ZINC CHROMATE AND TWO FIELD COATS OF ALUMINUM, UNLESS OTHERWISE NOTED, EXCEPT THE UNEXPOSED PORTION OF STEEL PILING NEED NOT BE PAINTED.
HANDRAIL BOLTS SHALL HAVE HEX HEADS, NUTS, AND LOCK WASHERS UNLESS OTHERWISE SPECIFIED AND ALL RIVETS, EXCEPT AS NOTED ARE ¾" DIA. AND SHALL BE POWER DRIVEN.
WHEN TREATED TIMBER OR PILING IS SHOWN ON THE DRAWING THE PRESERVATIVE TREATMENT SHALL BE CREOSOTE OIL.
WHEN EXCAVATING FOR FOOTINGS THE FINAL ONE FOOT IN DEPTH SHALL BE DONE BY HAND LABOR METHODS.
IF BY PERMISSION OF THE ENGINEER PRIMARY BARS ARE SPLICED, THEY SHALL LAP 34 DIAMETERS, FOR BARS NEAR TOP OF BEAMS AND GIRDERS HAVING MORE THAN 12 INCHES OF CONCRETE UNDER THE BARS AND 20 DIAMETERS FOR BARS NEAR BOTTOM OF MEMBERS.

LOADING DATA

LIVE LOAD = A.A.S.H.O. (H20-44)
DEAD LOAD ASSUMES 13 LBS. PER SQ. FT. ADDITIONAL WEARING SURFACE WHICH INCLUDES THE ½ INCH CONCRETE MONOLITHIC WEARING SURFACE SHOWN.

DESIGNING DATA

A.A.S.H.O. 1953 UNIT STRESSES, EXCEPT AS NOTED.
Reinforcing Steel f_s = 20000 lbs. per sq. in.
Structural Steel f_s = 18000 lbs. per sq. in.
f_c = 1200 lbs. per sq. in.
n = 10

COLORADO
DEPARTMENT OF HIGHWAYS
3 SPANS @ 40'-0" CONCRETE SLAB & GIRDER BRIDGE 28'-0" RDWY. 2'-0" CURBS 10° SKEW. GENERAL LAYOUT, BAR LIST, & QUANTITIES.

Across Conejos River
Sta. 1030+96.0 to 1032+21.55
Near Mogote Sec. 35 T.33 N. R. 4E

Designed by E.F.S.
Made by M.E.P.
Checked by

Approved by [signature]
Bridge Engineer
Date: July 26, 1957

STRUCTURE NO. P-12-U

Fed. Road Reg. No.	Division	Proj. No.	Sheet No.	Total Sheets
9	Colorado	S0111(3)	13	

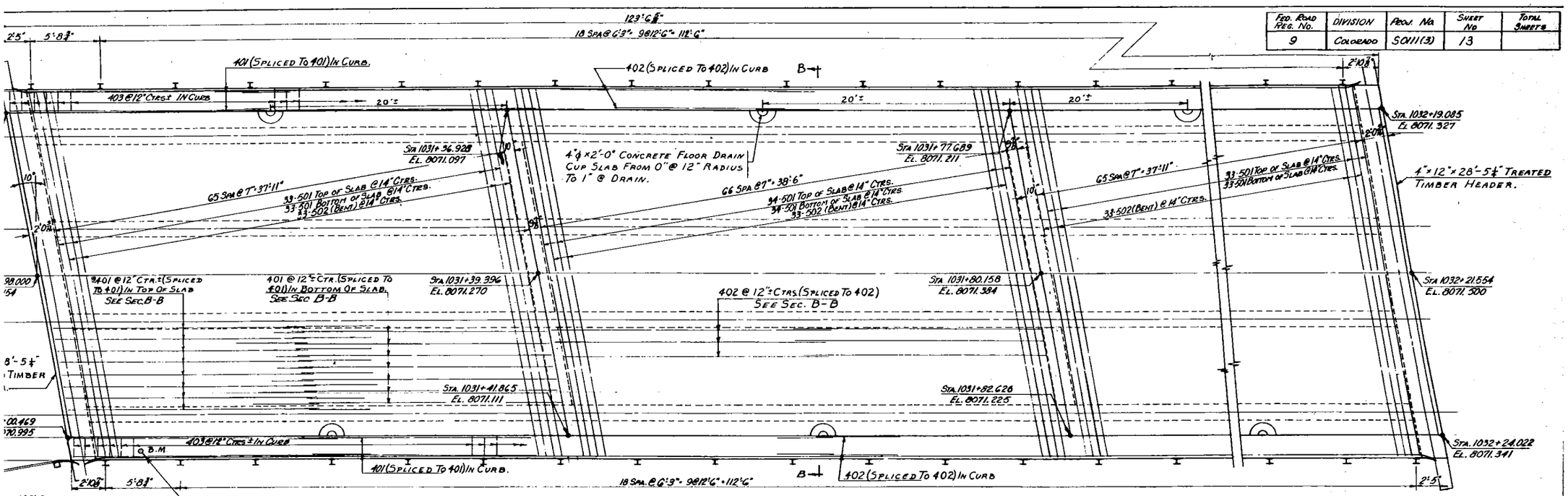

Plan

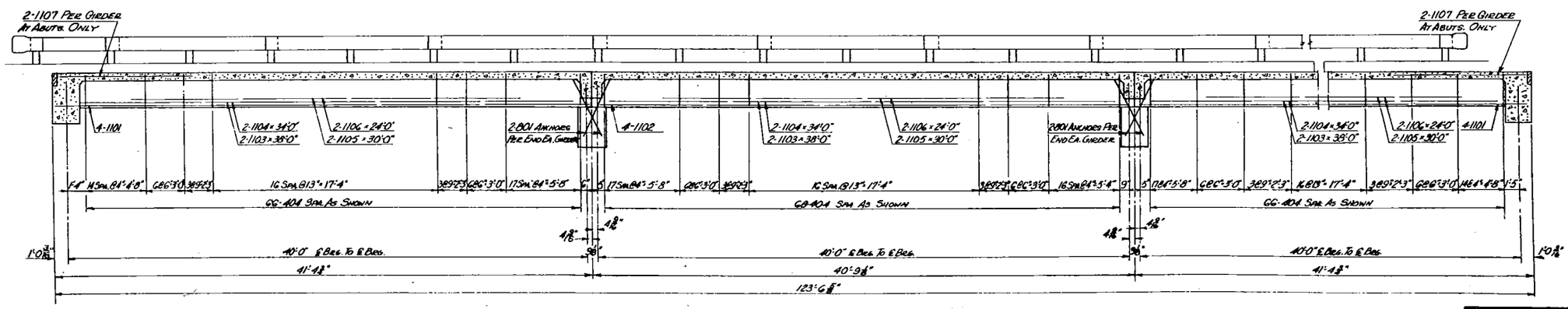

Section A-A

Colorado
Department of Highways
Details of Superstructure

Across Conejos River
Sta 1030+98.00 To 1032+21.55
Near Mogote Sec. 33 T. 33N. R. 8E.
Design By EPS
Made By JRE
Approved By A. D. Newbold
Bridge Engineer
July 26, 1957

Str. No. P-12-U

Fed. Road Reg. No.	Division	Proj. No.	Sheet No.	Total Sheets
9	Colo.	S0111(3)	14	

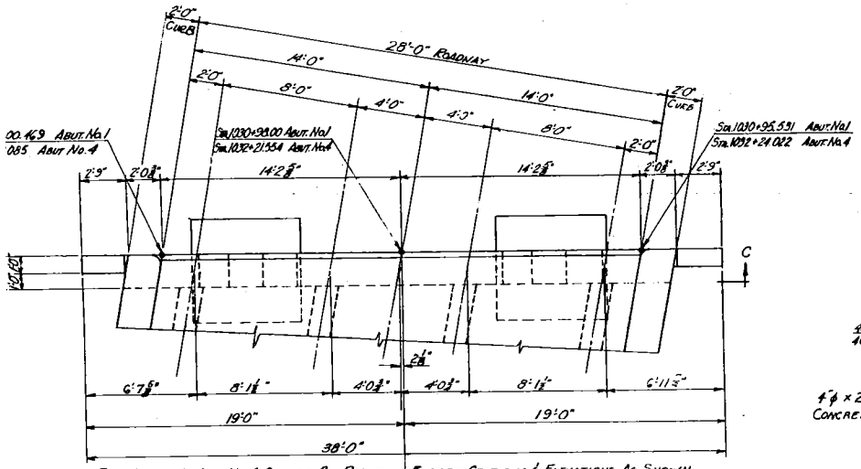

Plan Abut. No. 1 - Abut. No. 4 Similar By Rotation Except Stations & Elevations As Shown

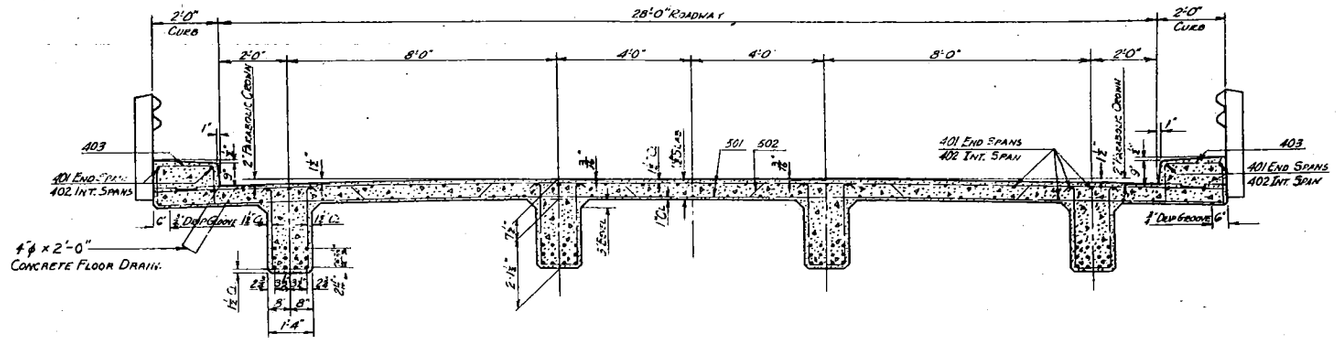

Section B-B

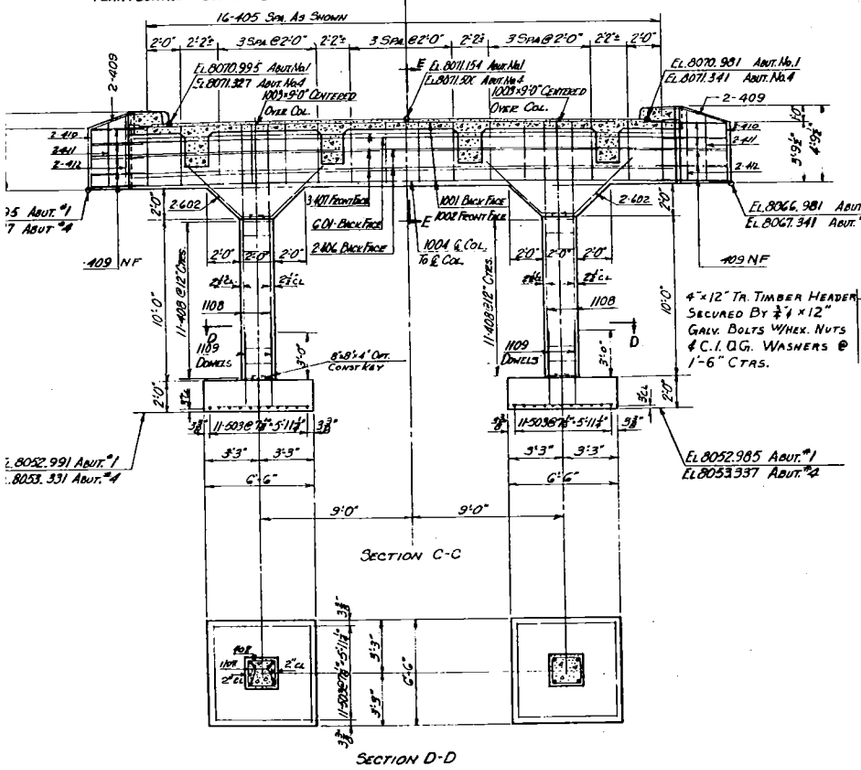

Section C-C

Section D-D

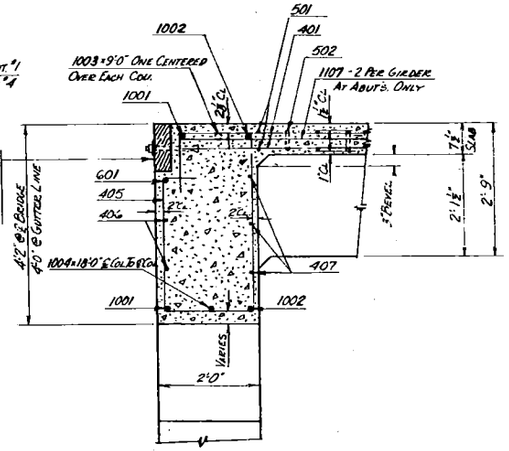

Section E-E

Colorado
Department of Highways
Details Abut. No. 1 & No. 4
Typical Superstructure Section

Across Conejos River
Sta. 1030+98.00 To 1032+21.55
Near Mogote Sec. 33 T. 33N R. 8E
Design By EFS
Made By JRE
Approved By E. D. Kurbold
Bridge Engineer
Date July 26, 1957

Str. No. P-12-U

Fed Road Reg. No.	Division	Proj. No.	Sheet No.	Total Sheets
9	Colo	S-0111(3)	15	

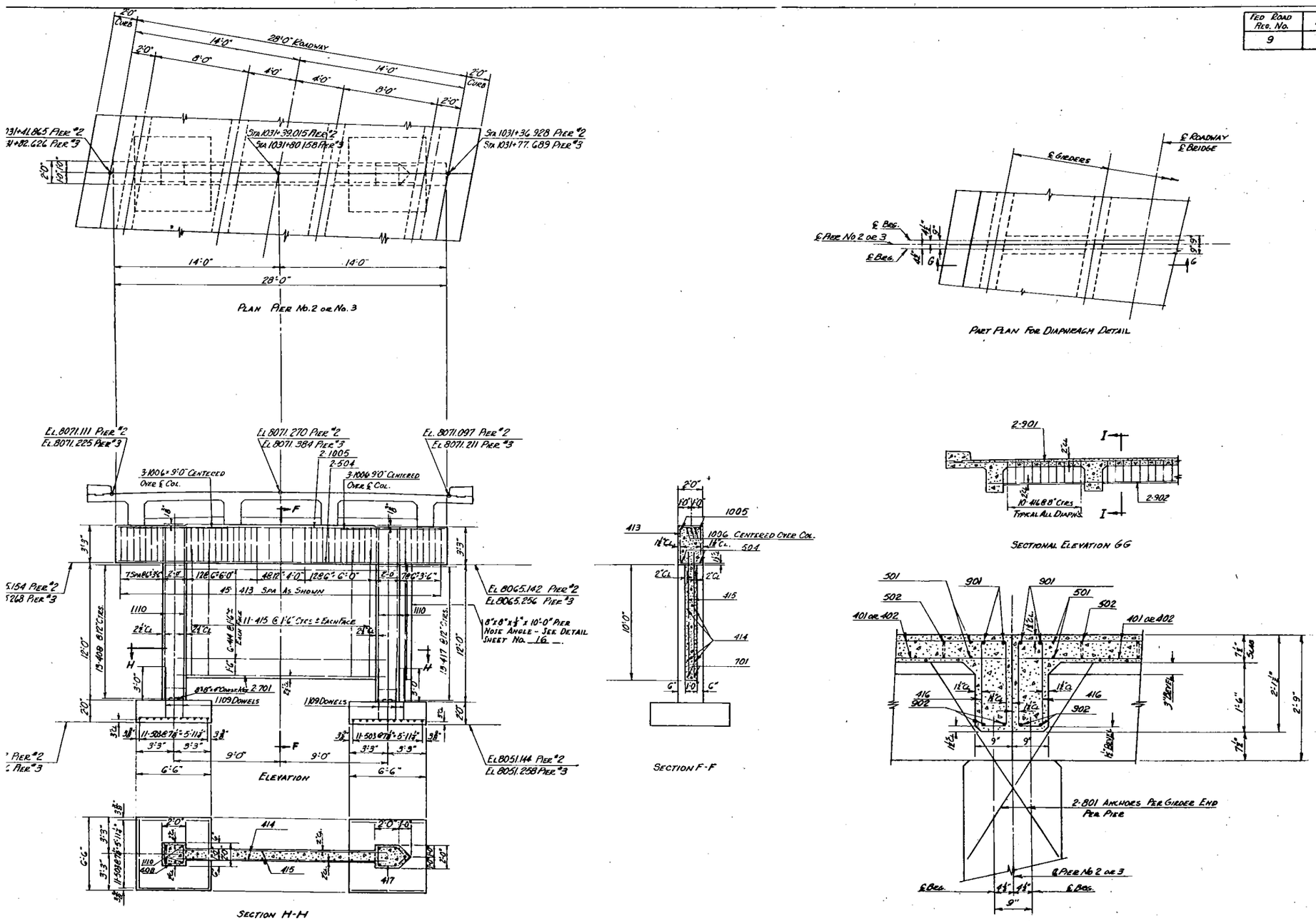

Str. No. P-12-U

Colorado Department of Highways

Details Pier No. 2 & No. 3
Diaphragm Details

Across Conejos River
Sta. 1030+98.00 to 1032+21.55
Near Mogote Sec. 33 T. 33N. R. 8E.

Design By EFS
Made By JRE
Approved By A.W. Kimball
Bridge Engineer
Date July 26, 1957