## GENERAL NOTES

EXCEPT AS SHOWN IN THE PLANS, STRUCTURE EXCAVATION AND BACKFILL SHALL BE IN ACCORDANCE WITH M-206-1 FOR CAST-IN-PLACE RETAINING WALLS AND M-206-2 FOR BRIDGE.

EXPANSION JOINT MATERIAL SHALL MEET AASHTO SPECIFICATION M213.

A COLORED STRUCTURAL CONCRETE COATING FINISH WILL BE REQUIRED, AS SHOWN ON THE PLANS, ON EXPOSED CONCRETE SURFACES. THE COLORS SHALL BE TAN AND BROWN, EQUIVALENT TO FEDERAL STANDARD 595B COLOR NO. 32630 AND 31090, AND IS TO BE SELECTED FROM TEST PANELS PROVIDED BY THE CONTRACTOR.

THE FINAL FINISH FOR THE SURFACES OF THE TYPE 7 BRIDGE RAIL AND CURBS SHALL BE CLASS 2 EXCEPT AS SHOWN. ALL OTHER EXPOSED CONCRETE SURFACES SHALL RECEIVE A CLASS 1 FINAL FINISH TO ONE FOOT BELOW THE GROUND LINE.

LEVELING PADS ARE UNLAMINATED BEARINGS. THEY SHALL BE CUT OR MOLDED FROM AASHTO ELASTOMER GRADE 3, 4, OR 5 AS DESCRIBED IN TABLES 705-1 AND 705-2 WITH A DUROMETER (SHORE "A") HARDNESS OF 60.

GRADE 60 REINFORCING STEEL IS REQUIRED.

ALL REINFORCING STEEL SHALL BE EPOXY COATED UNLESS OTHERWISE NOTED.

ALL THE PROVISIONS FOR BRIDGE DECK CONCRETE SHALL ALSO APPLY TO APPROACH SLAB CONCRETE.

THE FOLLOWING TABLE GIVES THE MINIMUM LAP SPLICE LENGTH FOR EPOXY COATED REINFORCING BARS PLACED IN ACCORDANCE WITH SUBSECTION 602.06. THESE SPLICE LENGTHS SHALL BE INCREASED BY 25% FOR BARS SPACED AT LESS THAN 6" ON CENTER.

| BAR SIZE | #4 | #5 | #6 | #7 | #8 | #9 | #10 | #11 |
|---|---|---|---|---|---|---|---|---|
| SPLICE LENGTH FOR CLASS D CONCRETE | 1'-3" | 1'-6" | 1'-10" | 2'-7" | 3'-8" | 4'-8" | 5'-11" | 7'-3" |

WHEN THE CONTRACTOR ELECTS TO SUBSTITUTE EPOXY COATED REINFORCEMENT FOR BLACK REINFORCING BARS, THE MINIMUM LAP SPLICE SHALL BE AS DESCRIBED ABOVE.

THE FOLLOWING TABLE GIVES THE MINIMUM LAP SPLICE LENGTH FOR BLACK REINFORCING BARS PLACED IN ACCORDANCE WITH SUBSECTION 602.06. THESE SPLICE LENGTHS SHALL BE INCREASED BY 25% FOR BARS SPACED AT LESS THAN 6" ON CENTER.

| BAR SIZE | #4 | #5 | #6 | #7 | #8 | #9 | #10 | #11 |
|---|---|---|---|---|---|---|---|---|
| SPLICE LENGTH FOR CLASS D CONCRETE | 1'-0" | 1'-4" | 1'-7" | 1'-10" | 2'-5" | 3'-1" | 3'-11" | 4'-10" |

THE ABOVE SPLICE LENGTHS SHALL BE INCREASED BY 20 PERCENT FOR 3 BAR BUNDLES AND 33 PERCENT FOR 4 BAR BUNDLES.

THE ABOVE SPLICE LENGTHS MAY BE REDUCED BY 20% WHEN 3" OF CLEAR COVER EXISTS AND BAR SPACING IS 6" OR GREATER ON CENTER.

THE CONTRACTOR SHALL BE RESPONSIBLE FOR THE STABILITY OF THE STRUCTURE DURING CONSTRUCTION.

E.F. = EACH FACE
F.F. = FAR FACE
N.F. = NEAR FACE

NO PERMANENT STAY IN PLACE STEEL DECK FORM ALLOWED UNLESS APPROVED BY THE ENGINEER. PRECAST CONCRETE DECK PANEL FORM IS OPTIONAL.

FOR STRUCTURE NUMBER INSTALLATION, SEE STANDARD S-614-12.

STATIONS, ELEVATIONS, AND DIMENSIONS CONTAINED IN THESE PLANS ARE CALCULATED FROM A RECENT FIELD SURVEY AND FROM EXISTING PLANS. THE CONTRACTOR SHALL VERIFY ALL DEPENDENT DIMENSIONS IN THE FIELD BEFORE ORDERING OR FABRICATING ANY MATERIAL.

STRUCTURAL STEEL FOR GIRDER DIAPHRAGMS SHALL BE AASHTO M270 GRADE (ASTM A-36).

THE INFORMATION SHOWN ON THESE PLANS CONCERNING THE TYPE AND LOCATION OF UNDERGROUND UTILITIES IS NOT GUARANTEED TO BE ACCURATE OR ALL INCLUSIVE. THE CONTRACTOR IS RESPONSIBLE FOR MAKING HIS OWN DETERMINATION AS TO THE TYPE AND LOCATION OF UNDERGROUND UTILITIES AS MAY BE NECESSARY TO AVOID DAMAGE THERETO. THE CONTRACTOR SHALL CONTACT THE UTILITY NOTIFICATION CENTER OF COLORADO AT 811 (1-800-922-1987) AT LEAST 3 DAYS (NOT INCLUDING THE DAY OF NOTIFICATION) PRIOR TO ANY EXCAVATION OR OTHER EARTHWORK.

## DESIGN DATA

AASHTO LRFD BRIDGE DESIGN SPECIFICATION 5TH EDITION 2010 WITH CURRENT INTERIMS

DESIGN METHOD: LOAD AND RESISTANCE FACTOR DESIGN LRFD

LIVE LOAD: HL-93 (DESIGN TRUCK OR TANDEM, AND DESIGN LANE LOAD)

COLLISION LOAD WITH STRUCTURE LRFD SECTION 3.6.5.2 400K HORIZONTAL FORCE.

DEAD LOAD: ASSUMES 30 LBS. PER SQ. FT. FOR BRIDGE DECK OVERLAY

UNFACTORED LOAD 600 PLF FOR 36" WATER LINE WITH 42"Ø CASING.

UNFACTORED LOAD OF 200 PLF FOR 12" WATER LINE WITH 22"Ø CASING

SULFATE EXPOSURE: CLASS 0

REINFORCED CONCRETE:

CLASS D CONCRETE: f'c = 4,500 psi
REINFORCING STEEL: fy = 60,000 psi

CAISSON CONCRETE:

CLASS BZ CONCRETE: f'c = 4,000 psi

REINFORCING STEEL: fy = 60,000 psi

PRECAST PRESTRESSED CONCRETE:

CLASS PS CONCRETE f'c = (SEE DETAILS)
f's = 270,000 psi

STEEL PILING: GRADE 50

## INDEX OF DRAWINGS


DWG. NO. B01 GENERAL INFORMATION
DWG. NO. B02 SUMMARY OF QUANTITIES
DWG. NO. B03 GENERAL LAYOUT
DWG. NO. B04 TYPICAL SECTION AND PROFILE GRADE
DWG. NO. B05 ENGINEERING GEOLOGY
DWG. NO. B06 CONSTRUCTION LAYOUT
DWG. NO. B07 CONSTRUCTION PHASING 1 OF 2
DWG. NO. B08 CONSTRUCTION PHASING 2 OF 2
DWG. NO. B09 CAISSON AND PILING LAYOUT DETAILS
DWG. NO. B10 CAISSON DETAILS
DWG. NO. B11 ABUTMENT 1 DETAILS
DWG. NO. B12 ABUTMENT 3 DETAILS
DWG. NO. B13 TYPICAL SECTION ABUTMENT 1 AND 3
DWG. NO. B14 WINGWALL DETAILS (AT ABUT. 1)
DWG. NO. B15 WINGWALL DETAILS (AT ABUT. 3)
DWG. NO. B16 PIER 2 DETAILS
DWG. NO. B17 PIER DETAILS
DWG. NO. B18 PIER DIAPHRAGM AND BEARING DETAILS
DWG. NO. B19 SUPERSTRUCTURE DETAILS 1 OF 2
DWG. NO. B20 SUPERSTRUCTURE DETAILS 2 OF 2
DWG. NO. B21 PIPE HANGER DETAILS (22")
DWG. NO. B22 PIPE HANGER DETAILS (42")
DWG. NO. B23 PRESTRESSED CONCRETE I
DWG. NO. B24 DIAPHRAGM DETAILS
DWG. NO. B25 PRECAST PANEL DECK FORM
DWG. NO. B26 PRECAST PANEL DECK FORM
DWG. NO. B27 VANE GRATE INLET (SPECIAL)
DWG. NO. B28 BRIDGE RAIL TYPE 7 (SPECIAL) W/SIDEWALK
DWG. NO. B29 SLOPE PAVING DETAILS
DWG. NO. B30 APPROACH SLAB DETAILS (NORTH)
DWG. NO. B31 APPROACH SLAB DETAILS (SOUTH)
DWG. NO. B32 BRIDGE EXPANSION DEVICE (0-4 INCH) W/SIDEWALK AND COVER PLATE
DWG. NO. B33 BRIDGE EXPANSION DEVICE DETAILS (0-4 INCH)
DWG. NO. B34 MECHANICALLY STABILIZED BACKFILL
DWG. NO. B35 EXC. AND BACKFILL FOR BRIDGE IN CUT
DWG. NO. B36 PEDESTRIAN FENCE (1 OF 3)
DWG. NO. B37 PEDESTRIAN FENCE (2 OF 3)
DWG. NO. B38 PEDESTRIAN FENCE (3 OF 3)
DWG. NO. B39 BRIDGE RAIL ARCHITECTURAL AND FENCE DETAILS
DWG. NO. B40 BRIDGE DECK ELEVATIONS
DWG. NO. B41 BRIDGE DECK ELEVATIONS
DWG. NO. B42 BRIDGE DECK ELEVATIONS
DWG. NO. B43 BRIDGE DECK ELEVATIONS
DWG. NO. B44 BRIDGE DECK ELEVATIONS
DWG. NO. B45 BRIDGE DECK ELEVATIONS
DWG. NO. B46 BRIDGE DECK ELEVATIONS


## BRIDGE DESCRIPTION

2 SPAN (105'-0",140'-0") BRIDGE,
PRECAST CONCRETE I-GIRDERS (BT72) PRESTRESSED

OVER U.S. 6
120'-0" ROADWAY CURB TO CURB (90° 00'00" SKEW)
8'-6" SIDEWALKS. TYPE 7 BRIDGE RAIL WITH PEDESTRIAN RAIL.

FOR BURIED UTILITY INFORMATION
TWO (2) BUSINESS DAYS
BEFORE YOU DIG
CALL 1-800-922-1987
UTILITY NOTIFICATION
CENTER OF COLORADO (UNCC)
www.uncc.org

B
CROSS REFERENCE DRAWING NUMBER
(IF BLANK, REFERENCE IS TO SAME SHEET)
SECTION OR DETAIL INDENTIFICATION

STATION 107+76.69 TO
STATION 110+24.69

| Design | INITIAL | DATE |
|---|---|---|
| Designed By | MM | 06/11 |
| Checked By | LF | 05/11 |

| Detail | INITIAL | DATE |
|---|---|---|
| Detailed By | RD | 06/11 |
| Checked By | MM | 06/11 |

| Quantities | INITIAL | DATE |
|---|---|---|
| Quantities By | RD | 06/11 |
| Checked By | MM/LF | 06/11 |

Print Date: 8/1/2011
Drawing File Name: 01Gen info F-16-X0.dgn
Horiz. Scale: 1:1 Vert. Scale: As Noted
Unit Information 0224 AJP

| Sheet Revisions | | |
|---|---|---|
| Date: | Comments | Init. |
| | | |
| | | |
| | | |
| | | |

Colorado Department of Transportation
8833 South Wadsworth Court
Littleton, CO 80128
Phone: 303-972-9112 FAX: 303-972-9114
Region 6 TG

As Constructed
No Revisions:
Revised:
Void:

GENERAL INFORMATION
Near Denver Sec. 8 T 4S R 68 W
Designer: M. Mohseni
Detailer: R. Olmos
Structure Numbers F-16-X0
Sheet Subset: Bridge
Subset Sheets: B01 of 46

Project No./Code
C 088A-024
16628
Sheet Number

# SUMMARY OF QUANTITIES

| Item No. | Description | Unit | Super Structure | Abut. 1 | Pier 2 | Abut. 3 | App. Slab (Both) | Total |
|---|---|---|---|---|---|---|---|---|
| 202 | Removal of Structures | Ea | 1 | | | | | 1 |
| 206 | Structure Excavation | CY | | 1,000 | 415 | 915 | | 2,330 |
| 206 | Structure Backfill (Class 1) | CY | | 1,165 | | 1,405 | | 2,570 |
| 206 | Structure Backfill (Class 2) | CY | | 193 | 375 | 129 | | 697 |
| 206 | Mechanical Reinforcement of Soil | CY | | 1,165 | | 1,405 | | 2,570 |
| 206 | Shoring (Area 1) | Ea | 1 | | | | | 1 |
| 206 | Shoring (Area 2) | Ea | 1 | | | | | 1 |
| 206 | Shoring (Area 3) | Ea | 1 | | | | | 1 |
| 403 | Stone Matrix Asphalt (Fibers) (Asphalt) | Ton | 546 | | | | 62 | 608 |
| 502 | Pile Tip | Ea | | 19 | | 19 | | 38 |
| 502 | Steel Piling (HP 12X74) | LF | | 1,747 | | 1,739 | | 3,486 |
| | | | | | | | | |
| 503 | Drilled Caisson (60 Inch) | LF | | | 541 | | | 541 |
| | | | | | | | | |
| 507 | Concrete Slope and Ditch Paving (Reinforced) | CY | | 76 | | 136 | | 212 |
| 509 | Provide Temporary Support | LS | 1 | | | | | 1 |
| 514 | Pedestrian Railing (Steel) (Special) | LF | 522 | | | | | 522 |
| | | | | | | | | |
| 515 | Waterproofing (Membrane) | SY | 3,307 | | | | 375 | 3,682 |
| | | | | | | | | |
| 518 | Bridge Expansion Device (0-4 Inch) | LF | | 138 | | 141 | | 279 |
| | | | | | | | | |
| 601 | Concrete Class D (Bridge) | CY | 1,230 | 176 | 208 | 172 | 222 | 2,008 |
| 601 | Structural Concrete Coating | SY | 2,120 | 108 | 490 | 72 | 56 | 2,846 |
| | | | | | | | | |
| 602 | Reinforcing Steel (Epoxy Coated) | Lb | 361,406 | 17,129 | 68,679 | 12,779 | 33,605 | 493,598 |
| 603 | 15 Inch Plastic Pipe | LF | | | | | 117 | 117 |
| 604 | Vane Grate Inlet Special | Ea | 2 | | | | | 2 |
| | | | | | | | | |
| 606 | Bridge Rail Type 7 Special | LF | 552 | | | | | 552 |
| | | | | | | | | |
| 613 | ¾ Inch Electrical Conduit | LF | 280 | | | | | 280 |
| 613 | 3 Inch Electrical Conduit | LF | 564 | | | | | 564 |
| | | | | | | | | |
| 618 | Prestressed Concrete I (BT72) | LF | 4,639.2 | | | | | 4,639.2 |
| | | | | | | | | |
| 619 | 12 Inch Ductile Iron Pipe | LF | 248 | | | | 28 | 276 |
| ▲ 619 | 22 Inch Welded Steel Pipe | LF | 248 | | | | 28 | 276 |
| 619 | 30 Inch Welded Steel Pipe | LF | 248 | | | | 28 | 276 |
| ▲ 619 | 42 Inch Welded Steel Pipe | LF | 248 | | | | 28 | 276 |
| | | | | | | | | |

▲ All plates pipe rollers, thread rods, support channels, bolts, nuts, and welding as well as all other assembly requirements are paid under Items 619 42 inch and 22 inch Welded Steel Pipe and will not be paid for separately. Payment for pipes are from the end of approach slab Abutment 1 to the end of approach slab abutment 3.

| Design | | | Detail | | | Quantities | | |
|---|---|---|---|---|---|---|---|---|
| | INITIAL | DATE | | INITIAL | DATE | | INITIAL | DATE |
| Designed By | MM | 06/11 | Detailed By | RD | 06/11 | Quantities By | RD | 06/11 |
| Checked By | LF | 05/11 | Checked By | MM | 06/11 | Checked By | MM/LF | 06/11 |

Print Date: 8/1/2011
File Name: 02Sum. OF Quan.dgn
Horiz. Scale: Vert. Scale: As Noted
Staff Bridge Branch - Unit 0224 AJP

| Sheet Revisions | | |
|---|---|---|
| Date: | Comments | Init. |
| | | |
| | | |
| | | |
| | | |

Colorado Department of Transportation
DOT DEPARTMENT OF TRANSPORTATION
8833 South Wadsworth Court
Littleton, CO 80128
Phone: 303-972-9112 FAX: 303-972-9114
Region 6 TG

As Constructed
No Revisions:
Revised:
Void:

SUMMARY OF QUANTITIES
Designer: M. Mohseni
Detailer: R. Olmos
Sheet Subset: Bridge
Structure Numbers F-16-XQ
Subset Sheets: B02 of 46

Project No./Code
C 088A-024
16628
Sheet Number

fussneckers 11:56:27 AM \\Public\bridge common\0224\16628_Federal_6th\My Project\02Sum. OF Quan.dgn
R:DLMS 11:56:27 AM

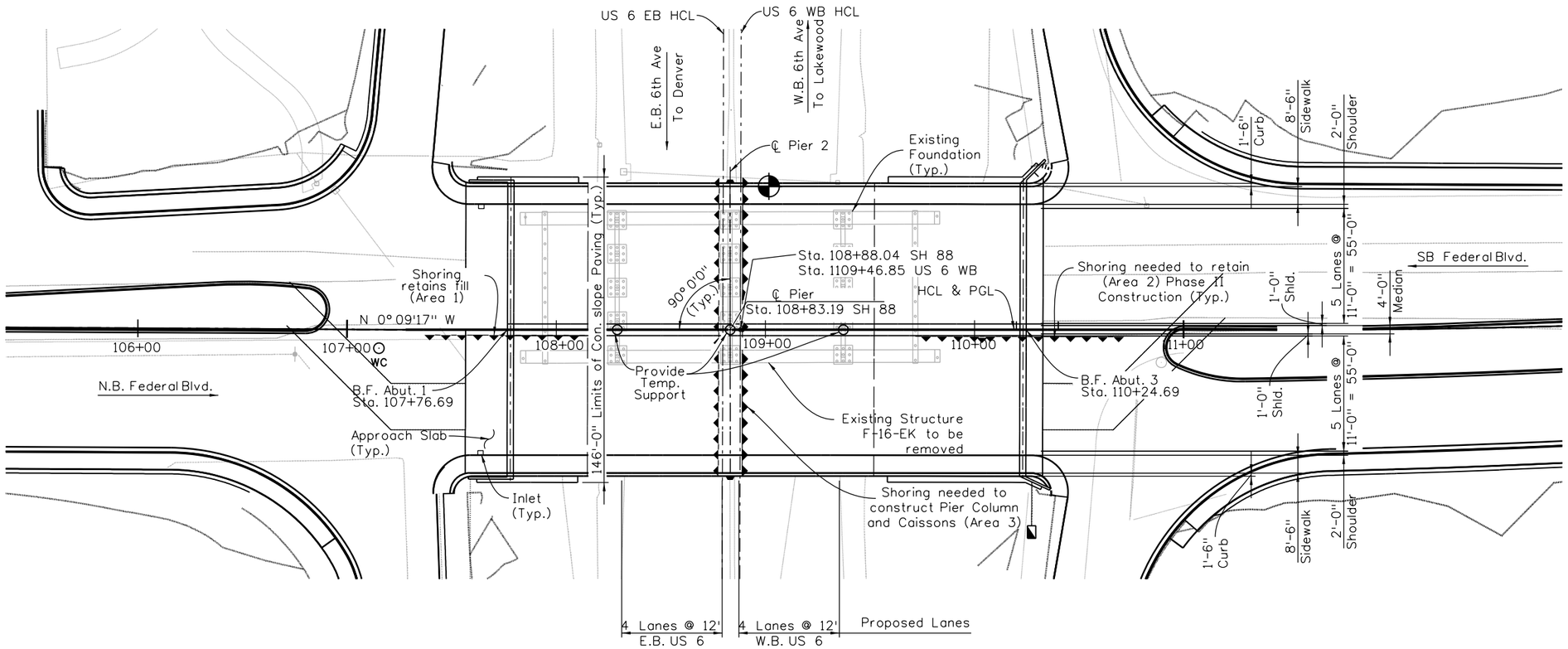


PLAN

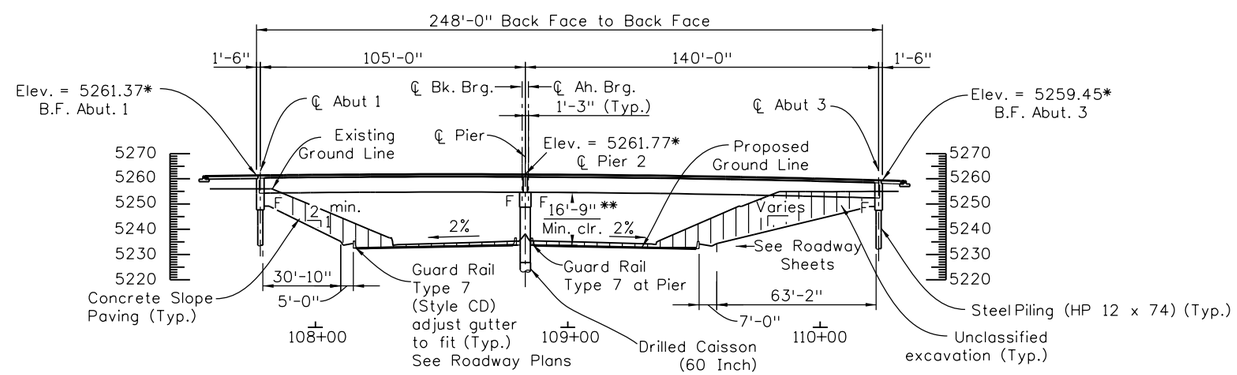


SECTION
(Taken at HCL)

Point of Minimum Clearance

* Elevations are at finished Grade

** Proposed Clearance

| Design | | | | Detail | | | | Quantities | | | |
|---|---|---|---|---|---|---|---|---|---|---|---|
| | INITIAL | DATE | | INITIAL | DATE | | INITIAL | DATE | | INITIAL | DATE |
| Designed By | MM | 06/11 | Detailed By | RO | 06/11 | Quantities By | RO | 06/11 | | | |
| Checked By | LF | 05/11 | Checked By | MM | 06/11 | Checked By | MM/LF | 06/11 | | | |

| | | | |
|---|---|---|---|
| Print Date: 8/1/2011 | Sheet Revisions | | |
| File Name: 03GeneralLayout.dgn | Date: | Comments | Init. |
| Horiz. Scale: 1" = 60' Vert. Scale: As Noted | | | |
| Staff Bridge Branch - Unit 0224 AJP | | | |

Colorado Department of Transportation
DOT
DEPARTMENT OF TRANSPORTATION
8833 South Wadsworth Court
Littleton, CO 80128
Phone: 303-972-9112 FAX: 303-972-9114
Region 6 TG

As Constructed
No Revisions:
Revised:
Void:

GENERAL LAYOUT

| | | | |
|---|---|---|---|
| Designer: | M. Mohseni | Structure Numbers | F-16-XO |
| Detailer: | R. Olmos | | |
| Sheet Subset: | Bridge | Subset Sheets: | B03 of 46 |

Project No./Code
C 088A-024
16628
Sheet Number

R:\OLMOS 11:56:33 AM

fussneckers 11:56:33 AM \\Public\bridge common\0224\16628_Federal_6th\My Project\03GeneralLayout.dgn

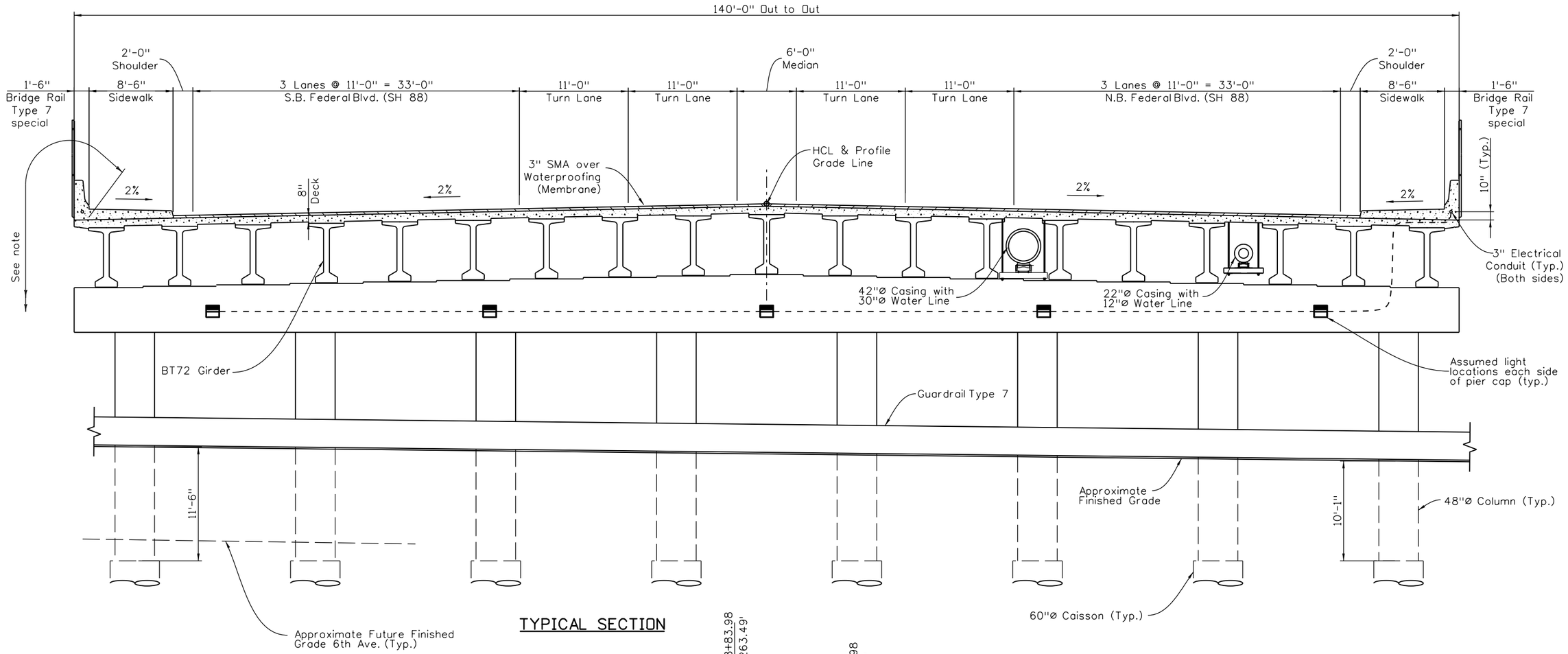


## TYPICAL SECTION

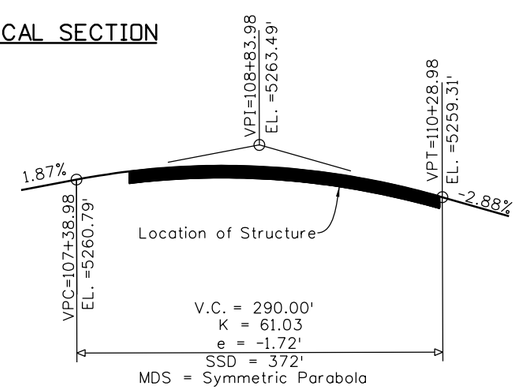


## PROFILE GRADE

## NOTES:

Apply tan structural concrete coating (color no. 32630) on Rail, overhang, exposed surface of exterior girders, bottom of all girders, Abutments, exposed Wingwalls, Pier cap and columns up to 1'-0" below the ground line of approximate Finished Grade.

| Design | | | Detail | | | Quantities | | |
|---|---|---|---|---|---|---|---|---|
| | INITIAL | DATE | | INITIAL | DATE | | INITIAL | DATE |
| Designed By | MM | 06/11 | Detailed By | RD | 06/11 | Quantities By | RD | 06/11 |
| Checked By | LF | 05/11 | Checked By | MM | 06/11 | Checked By | MM/LF | 06/11 |

| | | | |
|---|---|---|---|
| Print Date: 8/1/2011 | Sheet Revisions | | |
| File Name: 04Typical Section and profile grade .dgn | Date: | Comments | Init. |
| Horiz. Scale: None Vert. Scale: As Noted | | | |
| Staff Bridge Branch - Unit 0224 AJP | | | |


Colorado Department of Transportation
8833 South Wadsworth Court
Littleton, CO 80128
Phone: 303-972-9112 FAX: 303-972-9114
Region 6 TG


| As Constructed | TYPICAL SECTION AND PROFILE GRADE | | | Project No./Code |
|---|---|---|---|---|
| No Revisions: | | | | C 088A-024 |
| Revised: | Designer: M. Mohseni | Structure Numbers | F-16-XO | 16628 |
| | Detailer: R. Olmos | | | |
| Void: | Sheet Subset: Bridge | Subset Sheets: B04 of 46 | | Sheet Number |


R:\OLMOS 11:56:37 AM
fussneckers 11:56:37 AM \\Public\bridge common\0224\16628_Federal_6th\My Project\04Typical Section and profile grade .dgn

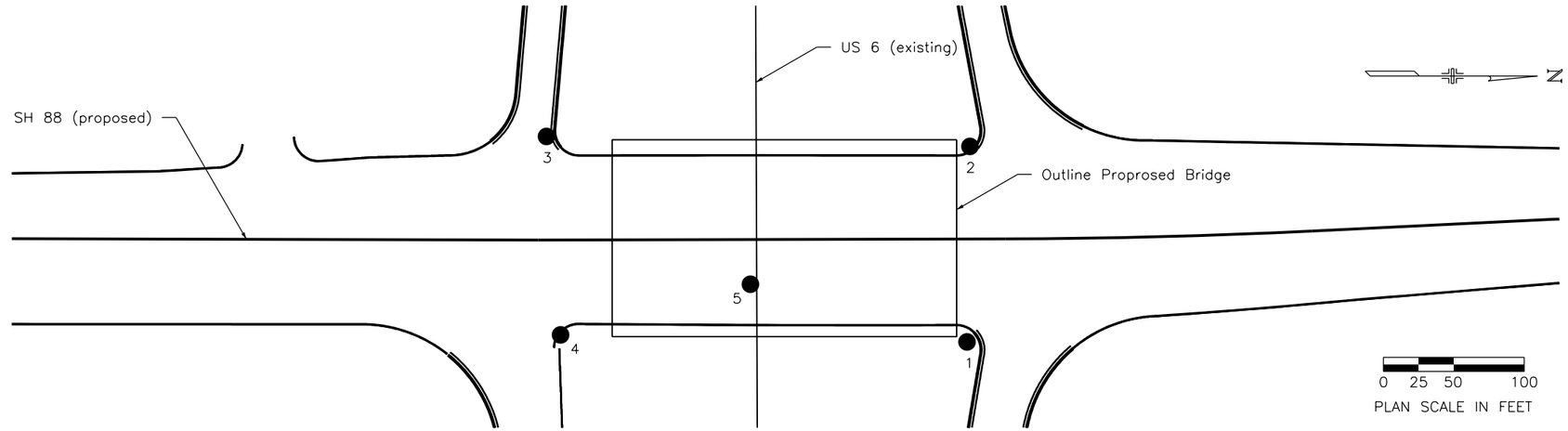


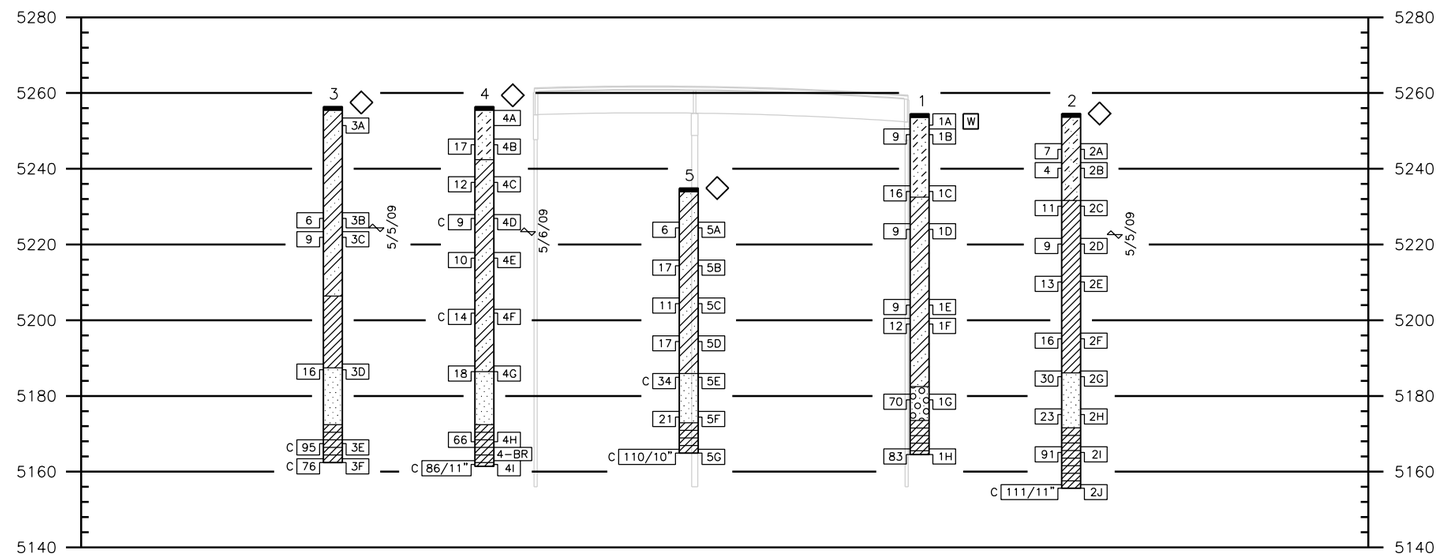


The boring logs of these test holes and geotechnical report are on file in the Geotechnical Program Office, Staff Materials and Geotechnical Branch, (303)398-6601

## SUMMARY OF TEST RESULTS

| Sample Number | Depth (feet) | Classification: Corps of Engrs. or Visual | Classification: USCS | Classification: AASHTO | Grading Analysis (AASHTO) Percent: Gravel | Coarse Sand | Fine Sand | Silt and Clay | Atterberg Limits: L.L. $L_W$ | P.L. $P_W$ | P.I. $I_W$ | Water Content W % |
|---|---|---|---|---|---|---|---|---|---|---|---|---|
| 1B | 4.0 | Clay | CL | A-6(9) | 4.8 | 8.6 | 30.0 | 56.5 | 38 | 16 | 22 | 15.6 |
| 1C | 19.0 | Clayey Sand | SC | A-6(1) | 9.0 | 17.5 | 37.5 | 35.9 | 35 | 19 | 16 | 19.8 |
| 1G | 74.0 | Gravel | GW-GC | – | 48.3 | 24.0 | 18.1 | 9.6 | – | – | – | 8.6 |
| | | | | | | | | | | | | |
| 2C | 23.0 | Clay | CL | – | 0.0 | 0.5 | 10.3 | 89.1 | – | – | – | 28.8 |
| 2G | 68.5 | Sand | SW | – | 31.4 | 33.0 | 31.5 | 4.1 | – | – | – | 13.2 |
| 2J | 98.0 | Claystone | CH | A-7-6(30) | 0.2 | 0.0 | 0.3 | 99.5 | 50 | 24 | 26 | 15.2 |
| | | | | | | | | | | | | |
| 3C | 33.0 | Clay | CL | – | 0.1 | 0.9 | 15.6 | 83.5 | – | – | – | 27.2 |
| 3F | 93.0 | Claystone | CL | – | 0.0 | 0.0 | 0.0 | 100.0 | – | – | – | 15.1 |
| | | | | | | | | | | | | |
| 4C | 18.5 | Clayey Sand | SC | – | 0.6 | 12.2 | 39.3 | 47.9 | – | – | – | 19.4 |
| 4D | 28.5 | Clay | CH | A-7-6(31) | 0.1 | 0.6 | 11.9 | 87.5 | 53 | 19 | 34 | 30.1 |
| 4F | 53.5 | Clay | CL | A-6(11) | 0.3 | 4.7 | 30.5 | 64.5 | 40 | 19 | 21 | 28.1 |
| 4I | 93.5 | Claystone | CH | A-7-6(29) | 0.0 | 0.0 | 0.1 | 99.9 | 50 | 25 | 25 | 17.1 |
| 4-BR | 90.0 | Claystone | – | – | – | – | – | – | – | – | – | 15.3 |
| | | | | | | | | | | | | |
| 5G | 69.0 | Claystone | CH | A-7-6(40) | 0.0 | 0.0 | 0.1 | 99.9 | 55 | 19 | 36 | 15.3 |

## TYPE OF MATERIAL

- Pavement, Asphalt, Topsoil
- Clay
- Sandy Clay
- Sandy Clay, Sandy Silt
- Sandy Silt
- Sand
- Gravel & Sand
- Claystone

## LEGEND

TEST BORING

- 3" Hole Size
- 1A Sample Number
- Blows per foot* 30
  R = Refusal on SPT
  C = California Sample
- 50/0.1
  50 Blows in 0.1 ft
- Water Level
- Core Recovery 50
  R.Q.D. 25
- *Standard Penetration Test (AASHTO T 206-87(2000))

CONTINUOUS PENETRATION TEST

- 2 Inch Diameter Drive Point
  30 Inch Free Fall
  140 Pound Hammer
- 0 50 100
  Blows Per Foot

- Location of Test Boring
- Location of Continuous Penetration Test
- W 3 Inch Wireline Boring
- Rotary Boring
- Auger Boring

Print Date: 8/1/2011
Drawing File Name: 05geosheet01 bridge.dgn
Horiz. Scale: 1:100 Vert. Scale: As Noted
Staff Geotechnical Program HCL

Sheet Revisions

| Date: | Comments | Init. |
|---|---|---|
| | | |
| | | |
| | | |
| | | |


Colorado Department of Transportation
DOT DEPARTMENT OF TRANSPORTATION
4670 Holly Street, Unit A
Denver, CO 80216
Phone: 303-398-6601 FAX: 303-398-6504
Staff Geotechnical Program HCL


As Constructed
No Revisions:
Revised:
Void:

ENGINEERING GEOLOGY

Designer: D. Thomas
Detailer: T. McNulty
Sheet Subset: Geology
Structure Numbers
Subset Sheets: B05 of 46

Project No./Code
C 088A-24
16628
Sheet Number

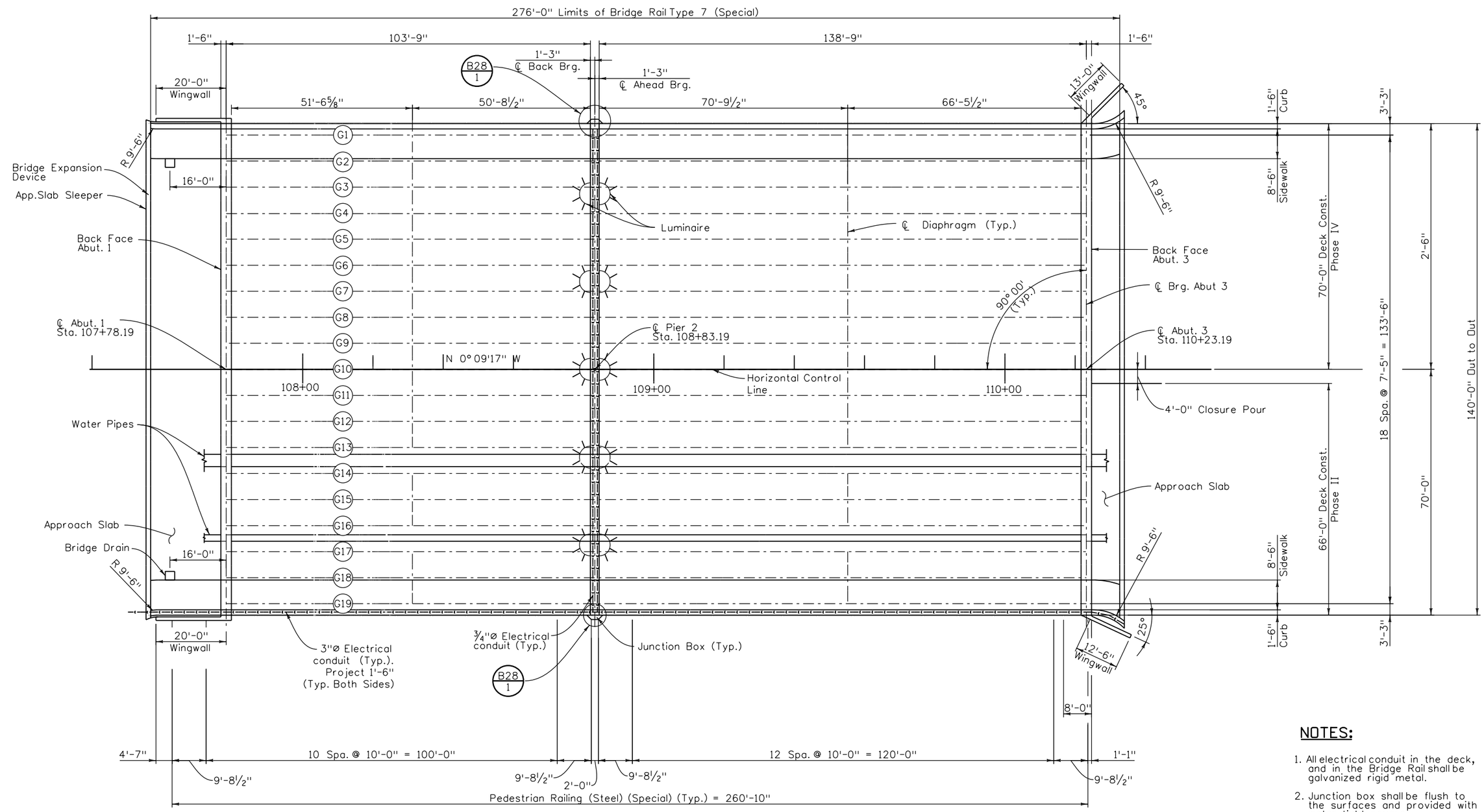


## CONSTRUCTION LAYOUT

## NOTES:

1. All electrical conduit in the deck, and in the Bridge Rail shall be galvanized rigid metal.
2. Junction box shall be flush to the surfaces and provided with water tight covers.

| Design | | | Detail | | | Quantities | | |
|---|---|---|---|---|---|---|---|---|
| | INITIAL | DATE | | INITIAL | DATE | | INITIAL | DATE |
| Designed By | MM | 06/11 | Detailed By | RD | 06/11 | Quantities By | RD | 06/11 |
| Checked By | LF | 05/11 | Checked By | MM | 06/11 | Checked By | MM/LF | 06/11 |

Print Date: 8/1/2011
File Name: 06Const Layout.dgn
Horiz. Scale: None Vert. Scale: As Noted
Staff Bridge Branch - Unit 0224 AJP

| Sheet Revisions | | |
|---|---|---|
| Date: | Comments | Init. |
| | | |
| | | |
| | | |
| | | |

Colorado Department of Transportation
8833 South Wadsworth Court
Littleton, CO 80128
Phone: 303-972-9112 FAX: 303-972-9114
Region 6 TG

As Constructed
No Revisions:
Revised:
Void:

CONSTRUCTION LAYOUT

| | | | |
|---|---|---|---|
| Designer: | M. Mohseni | Structure Numbers | F-16-XO |
| Detailer: | R. Olmos | | |
| Sheet Subset: | Bridge | Subset Sheets: | B06 of 46 |

Project No./Code
C 088A-024
16628
Sheet Number

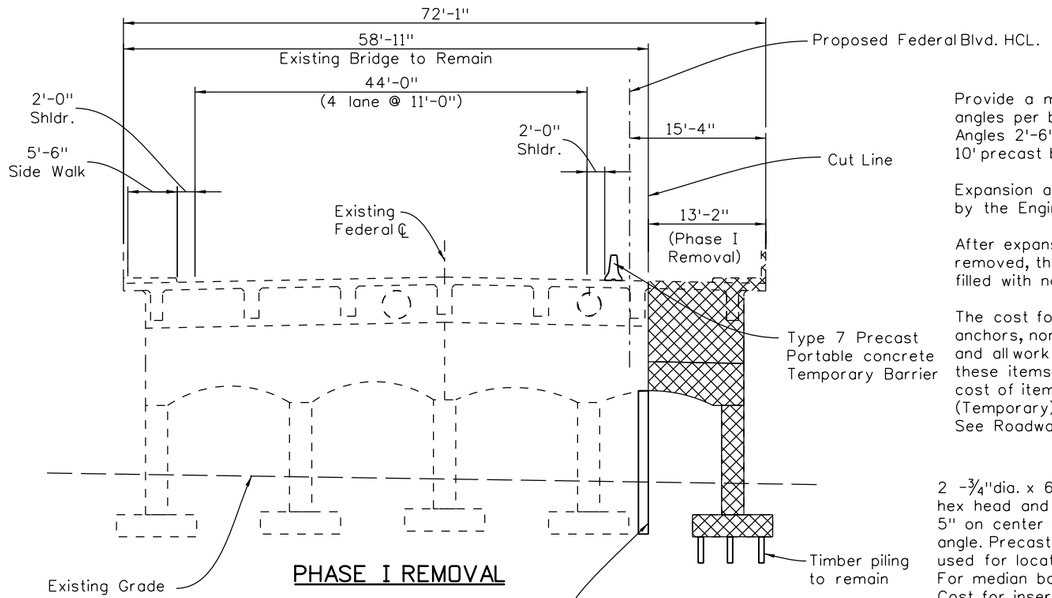


PHASE I REMOVAL

## TEMPORARY CONCRETE BARRIER DETAILS

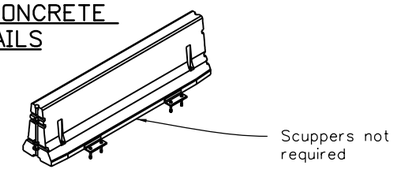


ISOMETRIC VIEW

Provide a minimum of 2 keeper angles per barrier. Space Keeper Angles 2'-6" from each end of each 10' precast barrier section.

Expansion anchors shall be approved by the Engineer prior to installation.

After expansion anchors are removed, the remaining holes shall be filled with non-shrink grout.

The cost for angles, expansion anchors, non-shrink grout, epoxy etc. and all work necessary to install these items shall be included in the cost of item 630 Concrete Barrier (Temporary) unless noted otherwise. See Roadway Plans.

2 -¾"dia. x 6" Expansion anchors w/ hex head and lock washers placed at 5" on center and 2" from end of angle. Precast threaded inserts shall be used for locations on precast panels. For median barrier, place on both sides. Cost for inserts shall be included in the cost of the work.

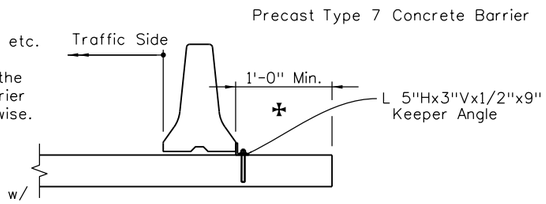


SECTION

✠ Keeper angle and anchor is not required for distances ≥ 3'-0"

## CONSTRUCTION SEQUENCE

Phase I

1. Place temporary support and shoring. Remove 13'-2" from east side of Existing structure as shown.

Phase II

1. Traffic to remain on existing structure during construction.
2. Use shoring and supports at Pier and Abutments.
3. Place type 7 precast portable concrete temporary barrier on the west side. Traffic is to remain on the portion of existing structure during construction.
4. Construct new substructure and superstructure to the east of existing structure with Type 7 Bridge Rail and Curb on the east edge.

Phase III

1. Move traffic to the newly constructed portion of new structure. Use Temporary Barrier and lanes as shown.
2. Remove the Remaining portion of the existing structure.

Phase IV

1. Construct remaining portion of new substructures.
2. Construct remaining portion of new superstructure, with night closures for girder erection and deck pour.
3. Construct curbs and railing along west edge of new structure.
4. Finish sidewalk and pedesrian rail portion of new structure during this phase.
5. Construct closure pour.

Phase V

1. Finish sidewalks. Remove temporary barrier.
2. Complete Final Paving operation.
3. Apply lane and shoulder pavement markings.
4. Shift traffic and open structure for full width

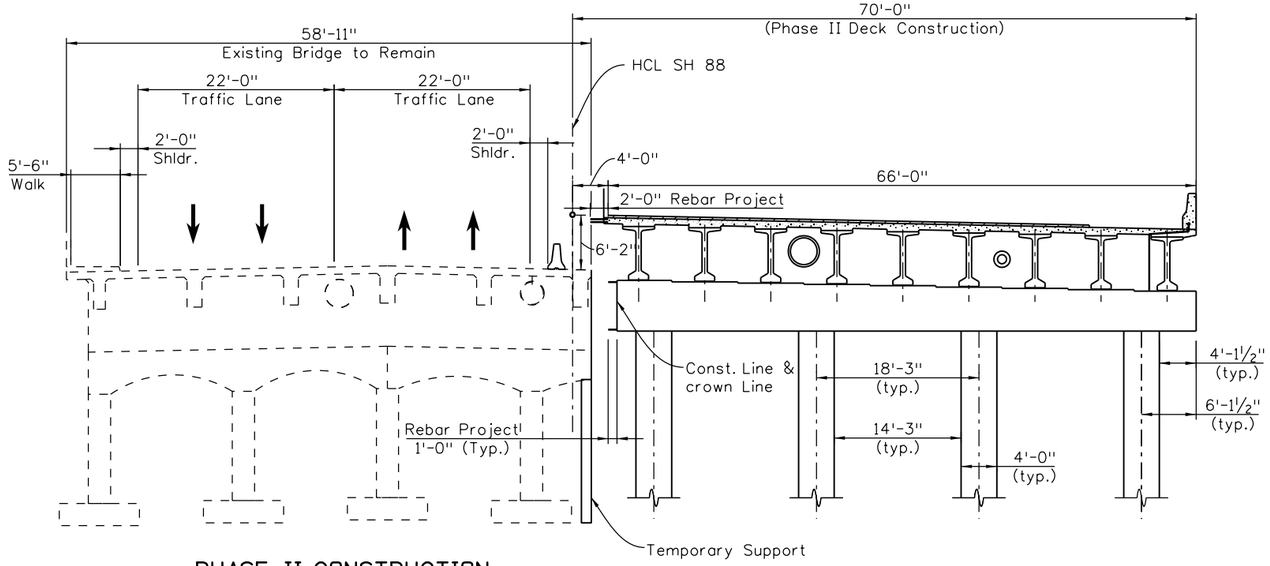


PHASE II CONSTRUCTION

(Looking Ahead Station)

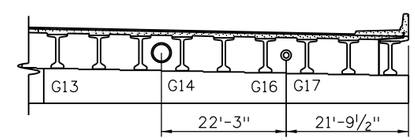


PIPE LOCATION AND SPACING DETAILS

(Looking Ahead Station)

## NOTES:

1. Shoring will be required to confine/support the existing roadway embankment and pier caps during Phase 1 construction and the new roadway embankment during phase II. Temporary support shall be able to support 300K max. load (Typ.). They shall be Designed and placed by the Contractor.
2. The Contractor shall be responsible for the stability of the new and existing structures during all phases of construction.
3. Phased construction requires the partial removal of the abutment seat and wingwalls. Sawcut the limits of removal a minimum of 2 inches deep to minimize damage to the existing deck abutment, and pier caps. Sawcuting will not be paid for separately but shall be included in the cost of work.

| Design | INITIAL | DATE | Detail | INITIAL | DATE | Quantities | INITIAL | DATE |
|---|---|---|---|---|---|---|---|---|
| Designed By | MM | 06/11 | Detailed By | RO | 06/11 | Quantities By | RO | 06/11 |
| Checked By | LF | 05/11 | Checked By | MM | 06/11 | Checked By | MM/LF | 06/11 |

| | | | |
|---|---|---|---|
| Print Date: 8/1/2011 | Sheet Revisions | Colorado Department of Transportation | As Constructed |
| File Name: 07construction Phasing(1of 2) .dgn | Date: / Comments / Init. | 8833 South Wadsworth Court, Littleton, CO 80128, Phone: 303-972-9112 FAX: 303-972-9114 | No Revisions: |
| Horiz. Scale: None / Vert. Scale: As Noted | | Region 6 TG | Revised: |
| Unit Information 0224 AJP | | | Void: |

| CONSTRUCTION PHASING (1 of 2) | | | | Project No./Code |
|---|---|---|---|---|
| Designer: M. Mohseni | Structure Numbers | F-16-XD | | C 088A-024 |
| Detailer: R. Olmos | | | | 16628 |
| Sheet Subset: Bridge | Subset Sheets: B07 of 46 | | | Sheet Number |

fussneckers 11:56:49 AM \\Public\bridge common\0224\16628_Federal_6th\My Project\07construction Phasing(1of 2) .dgn
R2LMOS 11:56:49 AM

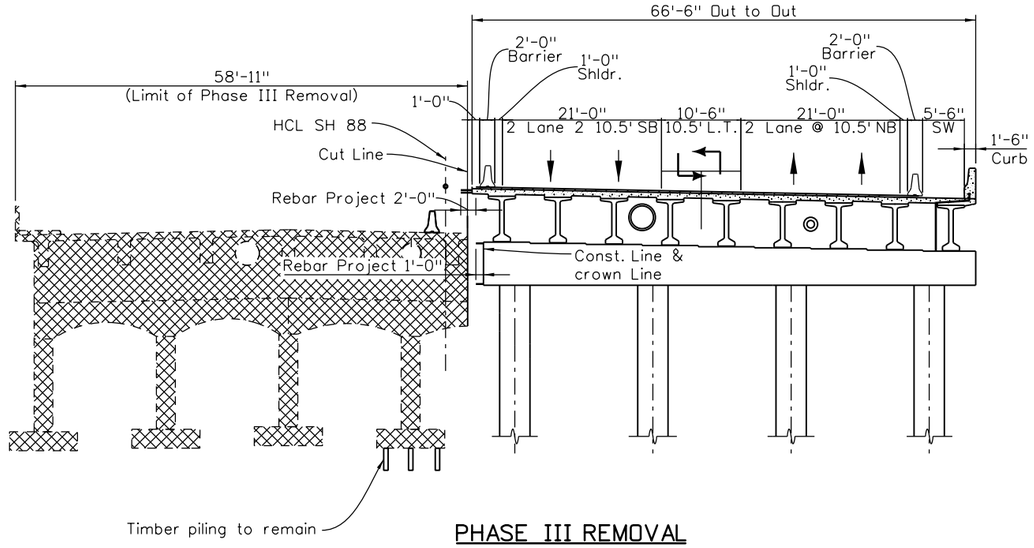


## PHASE III REMOVAL

(Looking Ahead Station)

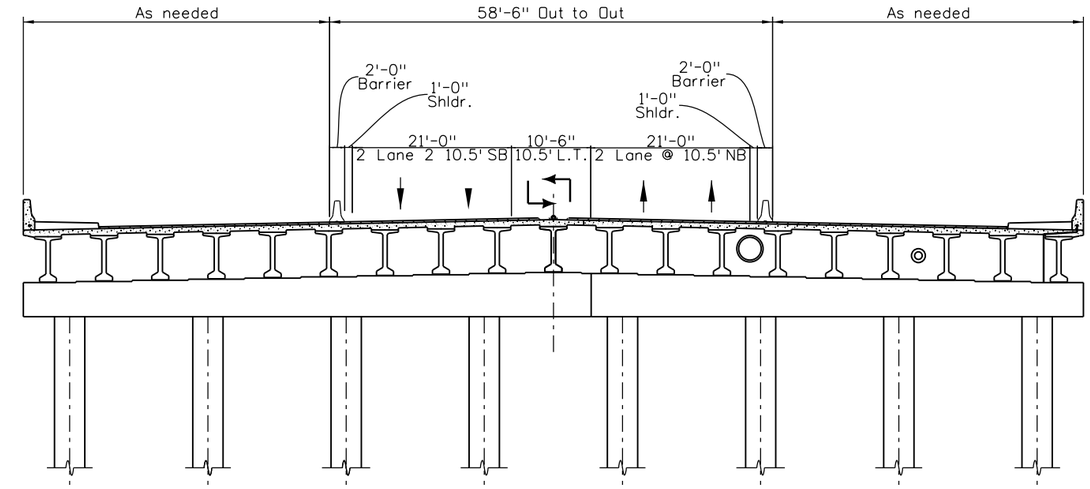


## PHASE IV CONSTRUCTION

(Construction of Sidewalks)
(Looking Ahead Station)

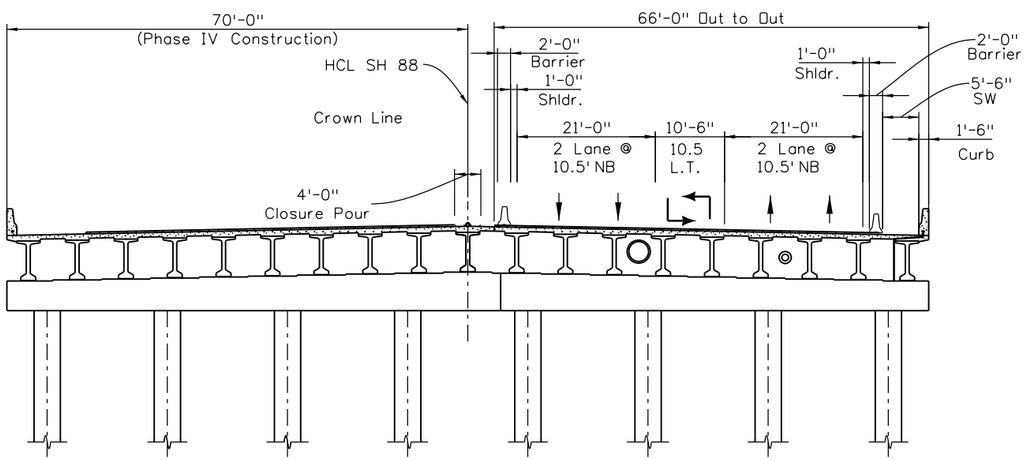


## PHASE IV CONSTRUCTION

(Construction West Side)
(Looking Ahead Station)

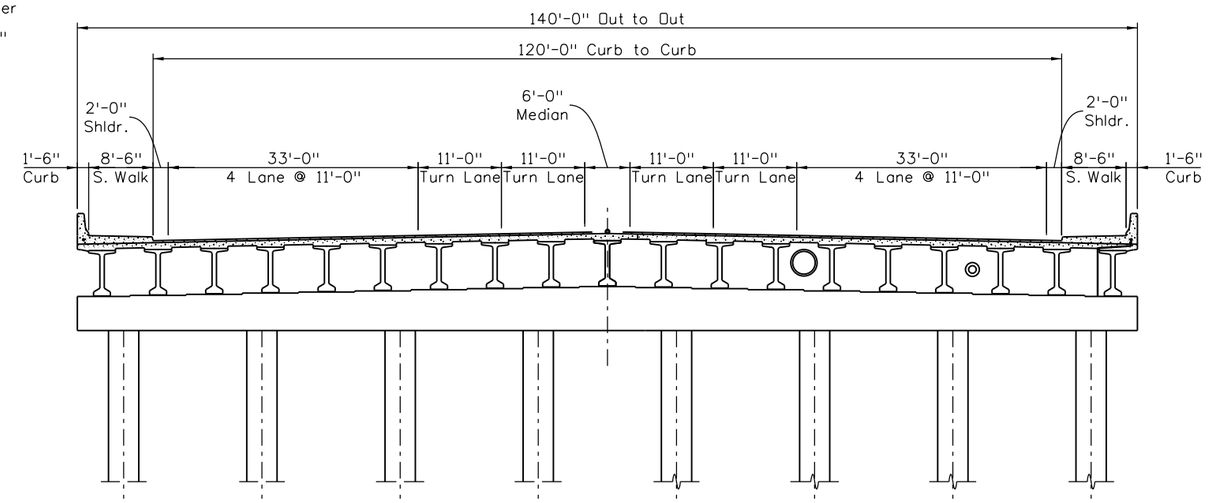


## PHASE V FINISH

(Looking Ahead Station)

| Design | | | | Detail | | | | Quantities | | | |
|---|---|---|---|---|---|---|---|---|---|---|---|
| | INITIAL | DATE | | | INITIAL | DATE | | | INITIAL | DATE |
| Designed By | MM | 06/11 | Detailed By | RO | 06/11 | Quantities By | RO | 06/11 |
| Checked By | LF | 05/11 | Checked By | MM | 06/11 | Checked By | MM/LF | 06/11 |

Print Date: 8/1/2011
File Name: 08construction Phasing (2 of 2)-For Nick.dgn
Horiz. Scale: None Vert. Scale: As Noted
Unit Information 0224 AJP

| Sheet Revisions | | |
|---|---|---|
| Date: | Comments | Init. |
| | | |
| | | |
| | | |
| | | |

Colorado Department of Transportation
8833 South Wadsworth Court
Littleton, CO 80128
Phone: 303-972-9112 FAX: 303-972-9114
Region 6 TG

As Constructed
No Revisions:
Revised:
Void:

CONSTRUCTION PHASING
(2 of 2)

Designer: M. Mohseni
Detailer: R. Olmos
Sheet Subset: Bridge
Structure Numbers: F-16-XO
Subset Sheets: B08 of 46

Project No./Code
C 088A-024
16628
Sheet Number

fussneckers 11:56:52 AM \\Public\bridge common\0224\16628_Federal_6th\My Project\08construction Phasing (2 of 2)-For Nick.dgn
R2LADS 11:56:52 AM

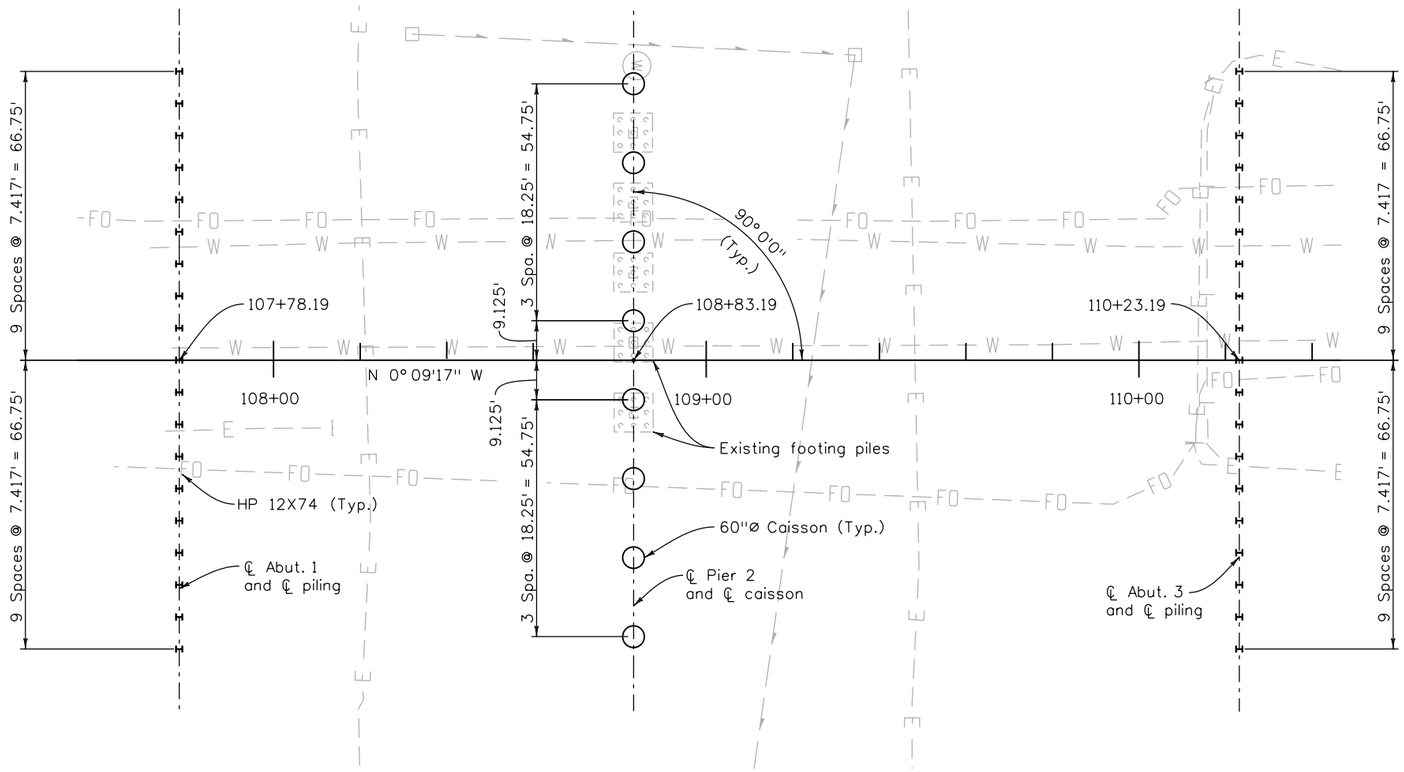


## CAISSON AND PILING LAYOUT

## NOTES:

Caissons and H-Piles capacities are based upon a performance factor of 0.5 and 0.65 respectively.

Subsurface investigation suggests that ground water may be encountered during the pier caissons drilling. Cost of dewatering, casing or any other incidental work to the caissons drilling and completion will not be measured and paid for separately but shall be included in the work.

All steel piles shall be (AASHTO M270, Grade 50) HP 12 X 74 with a protective cast-steel pile point driven by an open-ended diesel hammer with a manufacturer's rated energy of 70 to 75 kft. The protective pile point will be paid for under item 502-Pile Tip (Ea).

Orient the H-Pile web to be perpendicular to the centerline of bearing as shown.

Competent bedrock elevations were estimated in accordance with generally accepted geotechnical engineering practice. The elevation at which competent bedrock exists may not become evident until caissons are drilled. On site observation of the drilling or pile driving to confirm the bearing strata and determine the exact elevation at which the competent bedrock exists, and to check for pile crimping, buckling and alignment by a representative of the geotechnical engineer will be provided.

The Contractor shall coordinate the pile driving and the Dynamic Load testing (PDA).

For piles or caisson adjacent to the existing utilities, the contractor shall pothole to determine if there is any conflict with proposed construction. If adjustment is necessary to any pile or caisson, the contractor shall notify the Engineer IMMEDIATELY. Pile or caisson adjustment may require redesigning the abutment or pier cap. The redesign may take up to 3 weeks.

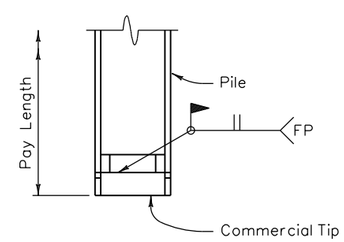


## REINFORCING TIP DETAIL

Use commercial tip APF Hard Bite 77600 or approved alternate.

| Location | Max. load (Unfactored) (kips) | Max. load (Factored) (kips) | Caisson Top Elevation | Top of Estimated Bedrock Elevation | Estimated Tip Elevation | Caisson size | Pile size | Min. Embedment into Rock (Ft.) |
|---|---|---|---|---|---|---|---|---|
| Abutment 1 | 263 | 353 | - | 5172 | 5157 | | HP 12X74 | 15' |
| Pier 2 | 1281 | 1825 | 5225.54 | 5173 | 5158 | 60" | | 15 |
| Abutment 3 | 296 | 405 | - | 5172 | 5157 | | HP 12X74 | 15' |

| Design | | | |
|---|---|---|---|
| | INITIAL | DATE | |
| Designed By | MM | 06/11 | |
| Checked By | LF | 05/11 | |

| Detail | | | |
|---|---|---|---|
| | INITIAL | DATE | |
| Detailed By | RD | 06/11 | |
| Checked By | MM | 06/11 | |

| Quantities | | | |
|---|---|---|---|
| | INITIAL | DATE | |
| Quantities By | RD | 06/11 | |
| Checked By | MM/LF | 06/11 | |

R:\DLMOS 11:06:55 AM

| | | | |
|---|---|---|---|
| Print Date: 8/1/2011 | | | |
| File Name: 09Caisson and Piling Layout.dgn | | | |
| Horiz. Scale: 1:1 | Vert. Scale: As Noted | | |
| Unit Information 0224 | AJP | | |

Sheet Revisions

| Date: | Comments | Init. |
|---|---|---|
| | | |
| | | |
| | | |
| | | |

Colorado Department of Transportation
8833 South Wadsworth Court
Littleton, CO 80128
Phone: 303-972-9112 FAX: 303-972-9114
Region 6 TG

As Constructed
No Revisions:
Revised:
Void:

CAISSON AND PILING LAYOUT DETAILS

| | | | |
|---|---|---|---|
| Designer: | M. Mohseni | Structure Numbers | F-16-XD |
| Detailer: | R. Olmos | | |
| Sheet Subset: | Bridge | Subset Sheets: | B09 of 46 |

Project No./Code
C 088A-024
16628
Sheet Number

## NOTES

1. Caissons shall at least extend to the estimated tip elevation. Caissons shall be further Advanced into the bedrock if necessary to obtain the specified minimum embedment.
2. Top of bedrock elevation shall be verified at time of construction by the Engineer.
3. The use of temporary casing &. dewatering during drilling caisson may be required. The cost of temporary casing & dewatering shall not be paid for separately but shall be included in the work.
4. For soil boring logs and geotechnical information see soils report by CDOT.
5. See utility plans for approximate location of know utilities. The Contractor is responsible for determining the exact location of Utilities and protection against damage to them during construction activities, including caisson drilling operation. The Contractor should immediately notify the engineer of any utility conflict that arise during construction.

## NOTES

1. Drilled Caisson concrete shall be Class BZ, f'c = 4000 psi.
2. See Pilling & caisson Layout Dwg. for Caisson locations.
3. All reinforcing steel shall be epoxy coated unless otherwise noted.
4. Ⓝ Denotes non coated reinforcing steel.

## KEY NOTES

① Alternate splices.

② A 6" uniform cage clearance shall be provided to accommodate a 3" caisson location tolerance with a minimum cage clearance of 3". Caisson and column reinforcing shall be placed such that ℄ cages equals planned ℄ of column.

③ See Piling & Caisson Layout for Estimated Tip elevation.

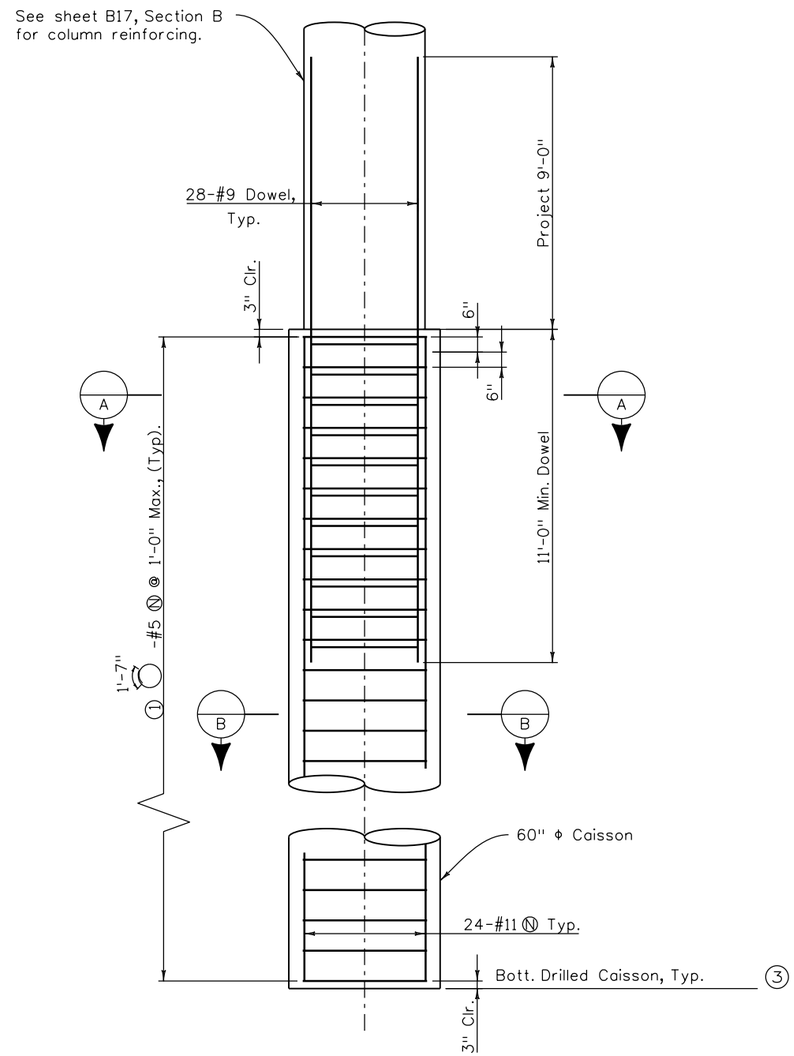


ELEVATION

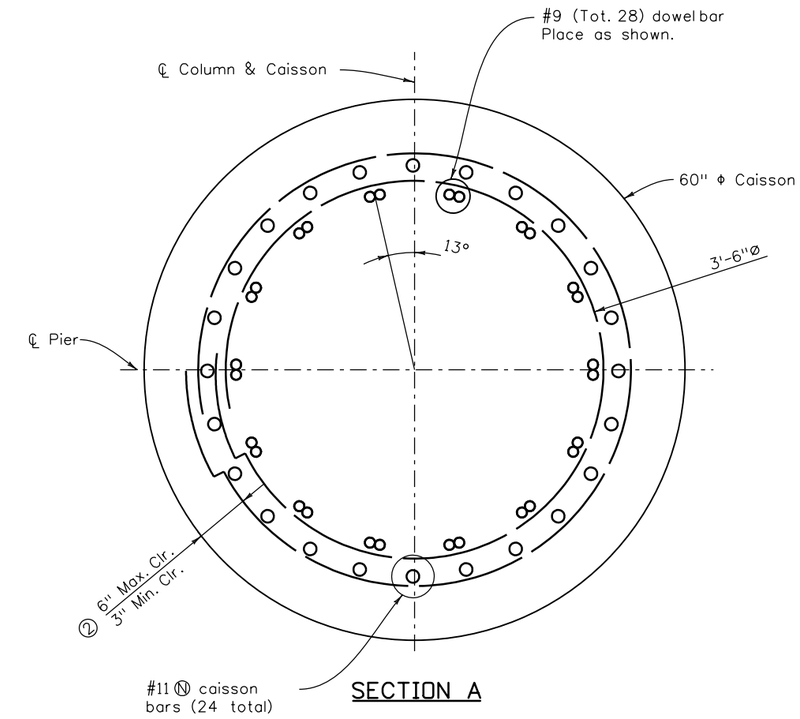


SECTION A

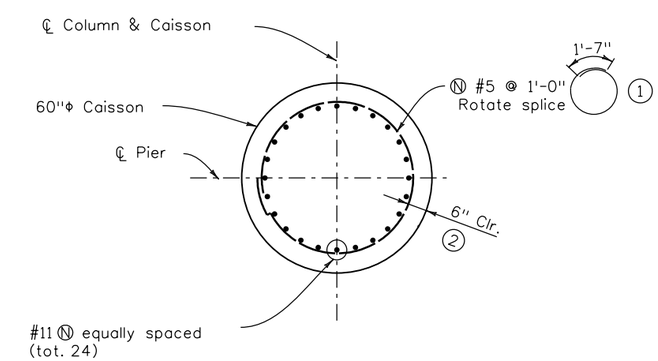


SECTION B

| Design | | | | Detail | | | | Quantities | | | |
|---|---|---|---|---|---|---|---|---|---|---|---|
| | INITIAL | DATE | | INITIAL | DATE | | INITIAL | DATE | | INITIAL | DATE |
| Designed By | MM | 06/11 | Detailed By | RD | 06/11 | Quantities By | RD | 06/11 | | | |
| Checked By | LF | 05/11 | Checked By | MM | 06/11 | Checked By | MM/LF | 06/11 | | | |

| | | | |
|---|---|---|---|
| Print Date: 8/1/2011 | Sheet Revisions | | |
| File Name: 10Caisson and Column Details.dgn | Date: | Comments | Init. |
| Horiz. Scale: 1:1 Vert. Scale: As Noted | | | |
| Unit Information 0224 AJP | | | |

Colorado Department of Transportation
8833 South Wadsworth Court
Littleton, CO 80128
Phone: 303-972-9112 FAX: 303-972-9114
Region 6 TG

As Constructed
No Revisions:
Revised:
Void:

CAISSON DETAILS

| | | | |
|---|---|---|---|
| Designer: | M. Mohseni | Structure Numbers | F-16-XD |
| Detailer: | R. Olmos | | |
| Sheet Subset: | Bridge | Subset Sheets: | B10 of 46 |

Project No./Code
C 088A-024
16628
Sheet Number

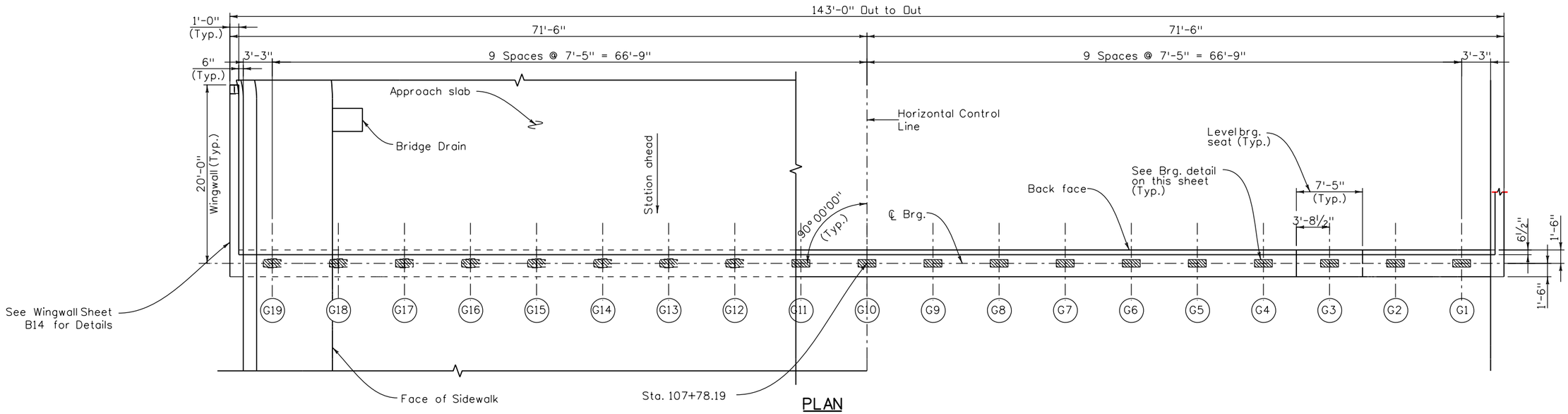


## PLAN

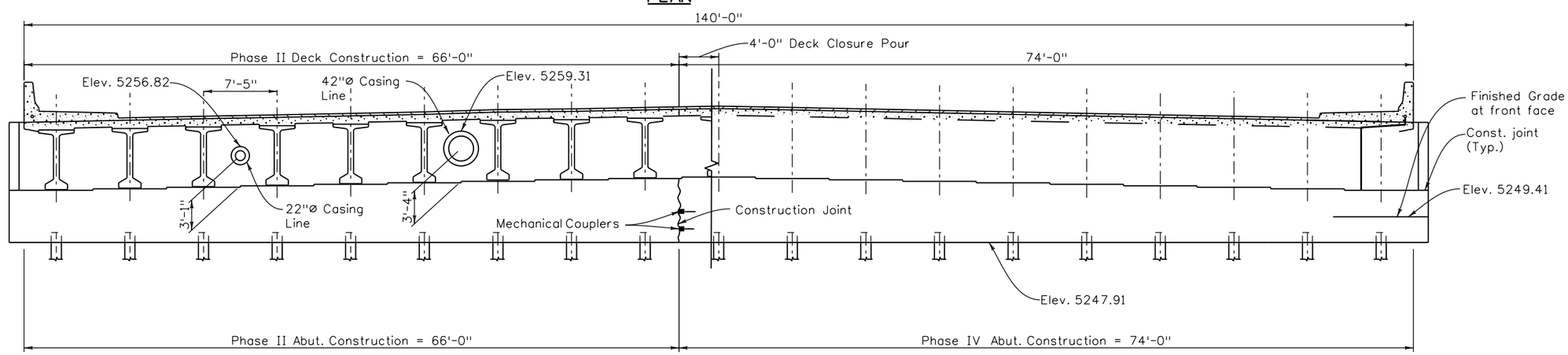


## ELEVATION

For bearing seat elevations see seat elevation table

## SEAT ELEVATION TABLE

| Location | Elevation |
|---|---|
| Girder 1 | 5252.91 |
| Girder 2 | 5253.06 |
| Girder 3 | 5253.20 |
| Girder 4 | 5253.35 |
| Girder 5 | 5253.50 |
| Girder 6 | 5253.65 |
| Girder 7 | 5253.80 |
| Girder 8 | 5253.94 |
| Girder 9 | 5254.09 |
| Girder 10 | 5254.24 |
| Girder 11 | 5254.09 |
| Girder 12 | 5253.94 |
| Girder 13 | 5253.80 |
| Girder 14 | 5253.65 |
| Girder 15 | 5253.50 |
| Girder 16 | 5253.35 |
| Girder 17 | 5253.20 |
| Girder 18 | 5253.06 |
| Girder 19 | 5252.91 |

## NOTE:

All exposed surfaces of Abutments fed. color No. 32630 (tan).

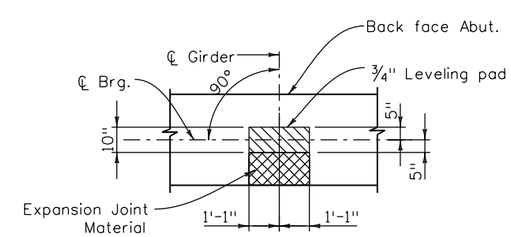


## BEARING DETAIL

| Design | | | Detail | | | Quantities | | |
|---|---|---|---|---|---|---|---|---|
| | INITIAL | DATE | | INITIAL | DATE | | INITIAL | DATE |
| Designed By | MM | 06/11 | Detailed By | RD | 06/11 | Quantities By | RD | 06/11 |
| Checked By | LF | 05/11 | Checked By | MM | 06/11 | Checked By | MM/LF | 06/11 |

| | | | |
|---|---|---|---|
| Print Date: 8/1/2011 | Sheet Revisions | | |
| File Name: 11Abutment 1 Det.dgn | Date: | Comments | Init. |
| Horiz. Scale: 1:1 Vert. Scale: As Noted | | | |
| Staff Bridge Branch - Unit 0224 AJP | | | |

Colorado Department of Transportation
8833 South Wadsworth Court
Littleton, CO 80128
Phone: 303-972-9112 FAX: 303-972-9114
Region 6 TG

As Constructed
No Revisions:
Revised:
Void:

ABUTMENT 1 DETAILS

| | | | |
|---|---|---|---|
| Designer: | M. Mohseni | Structure Numbers | F-16-XD |
| Detailer: | R. Olmos | | |
| Sheet Subset: | Bridge | Subset Sheets: | B11 of 46 |

Project No./Code
C 088A-024
16628
Sheet Number

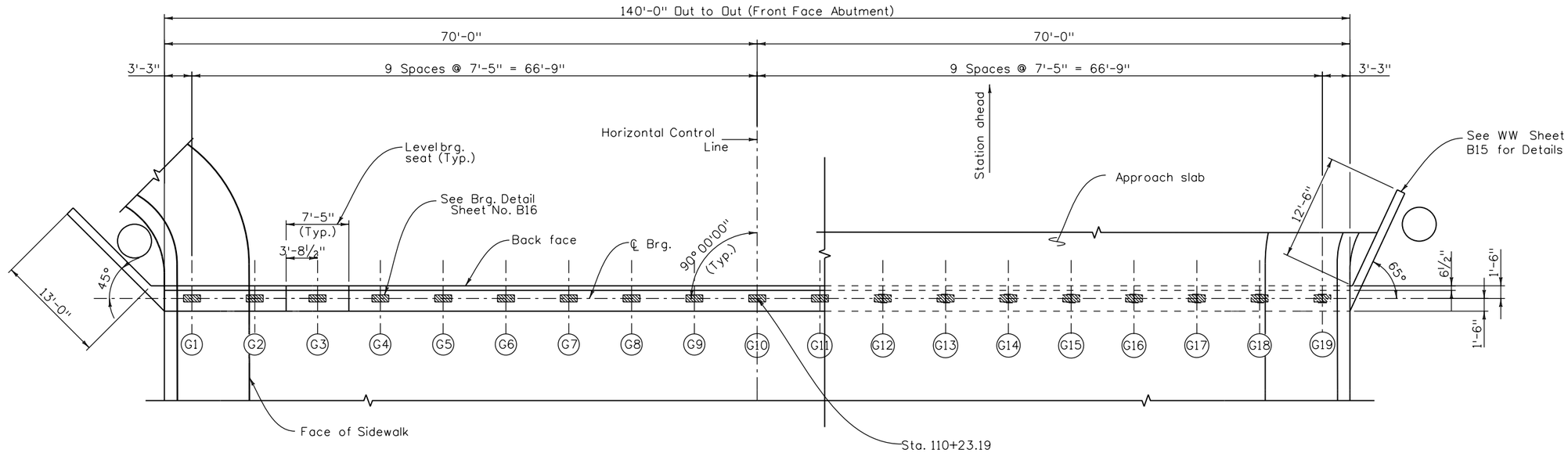


## PLAN

**SEAT ELEVATION TABLE**

| Location | Elevation |
|---|---|
| Girder 1 | 5251.00 |
| Girder 2 | 5251.15 |
| Girder 3 | 5251.29 |
| Girder 4 | 5251.44 |
| Girder 5 | 5251.59 |
| Girder 6 | 5251.74 |
| Girder 7 | 5251.89 |
| Girder 8 | 5252.04 |
| Girder 9 | 5252.18 |
| Girder 10 | 5252.33 |
| Girder 11 | 5252.18 |
| Girder 12 | 5252.04 |
| Girder 13 | 5251.89 |
| Girder 14 | 5251.74 |
| Girder 15 | 5251.59 |
| Girder 16 | 5251.44 |
| Girder 17 | 5251.29 |
| Girder 18 | 5251.15 |
| Girder 19 | 5251.00 |

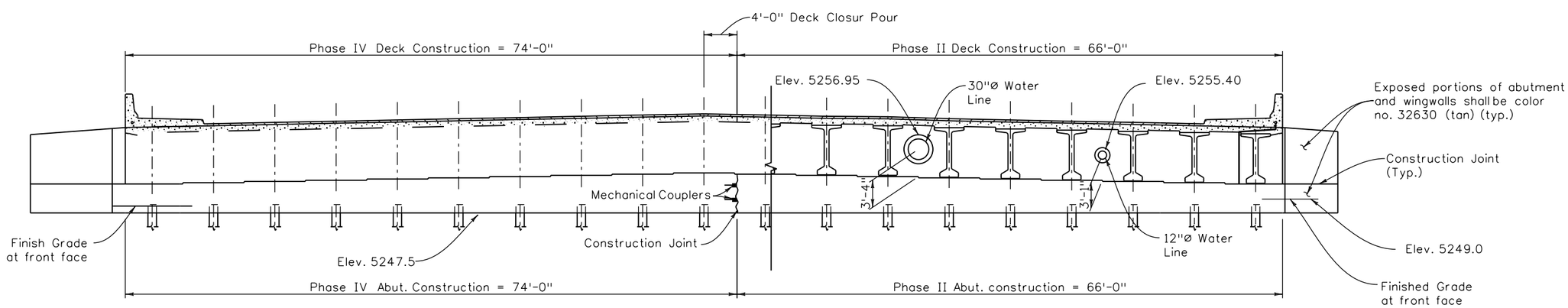


## ELEVATION

For bearing seat elevations see seat elevation table

**NOTE:**

All exposed surfaces of Abutments fed. color No. 32630 (tan).

| Quantities | INITIAL | DATE |
|---|---|---|
| Quantities By | RD | 06/11 |
| Checked By | MM/LF | 06/11 |

| Detail | INITIAL | DATE |
|---|---|---|
| Detailed By | RD | 06/11 |
| Checked By | MM | 06/11 |

| Design | INITIAL | DATE |
|---|---|---|
| Designed By | MM | 06/11 |
| Checked By | LF | 05/11 |

Print Date: 8/1/2011
File Name: 12Abut 3 Details.dgn
Horiz. Scale: None Vert. Scale: As Noted
Staff Bridge Branch - Unit 0224 AJP

| Sheet Revisions | | |
|---|---|---|
| Date: | Comments | Init. |
| | | |
| | | |
| | | |
| | | |

Colorado Department of Transportation
DOT
DEPARTMENT OF TRANSPORTATION
8833 South Wadsworth Court
Littleton, CO 80128
Phone: 303-972-9112 FAX: 303-972-9114
Region 6 TG

As Constructed
No Revisions:
Revised:
Void:

ABUTMENT 3 DETAILS

Designer: M. Mohseni
Detailer: R. Olmos
Sheet Subset: Bridge
Structure Numbers: F-16-XD
Subset Sheets: B12 of 46

Project No./Code
C 088A-024
16628
Sheet Number

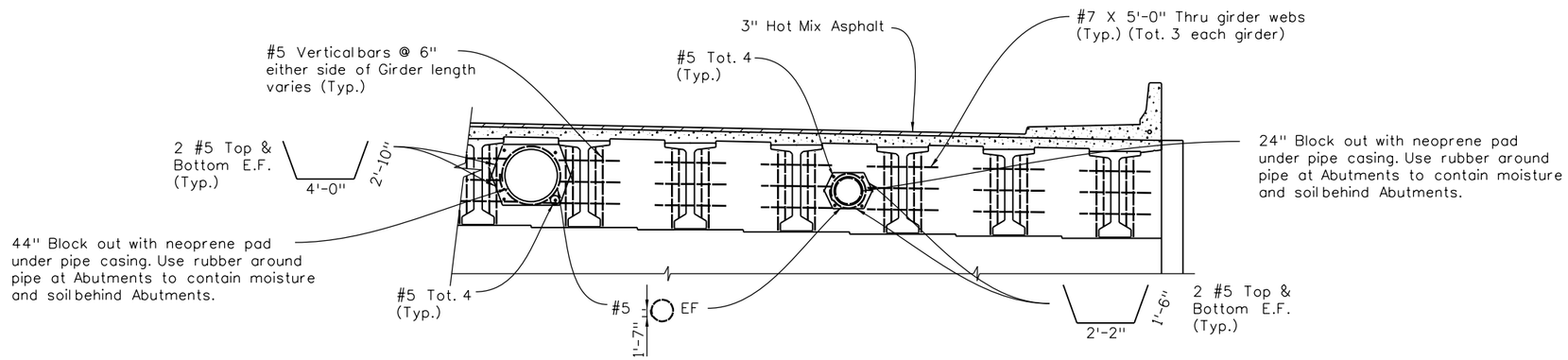


## PARTIAL ELEVATION ABUTMENT 1 OR 3

Rest of Abutment reinforcing not shown for clarity.

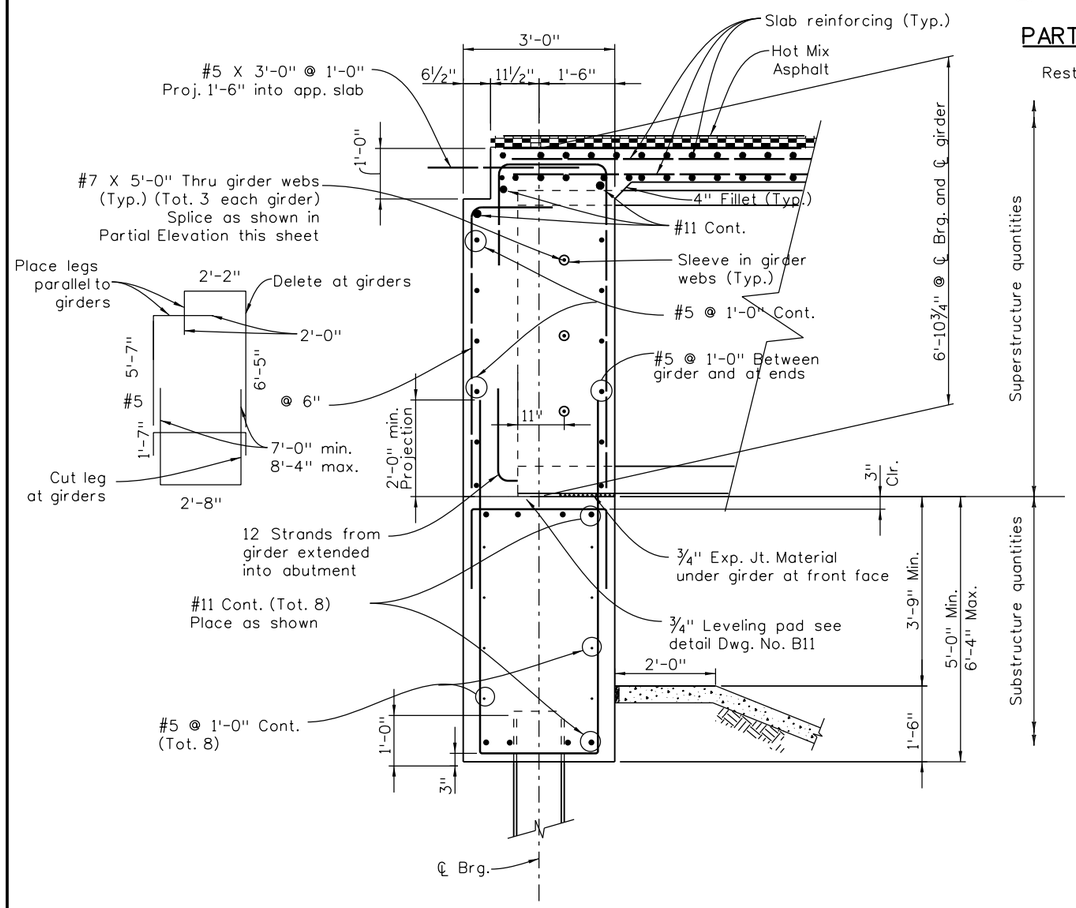


TYPICAL SECTION ABUT. 1

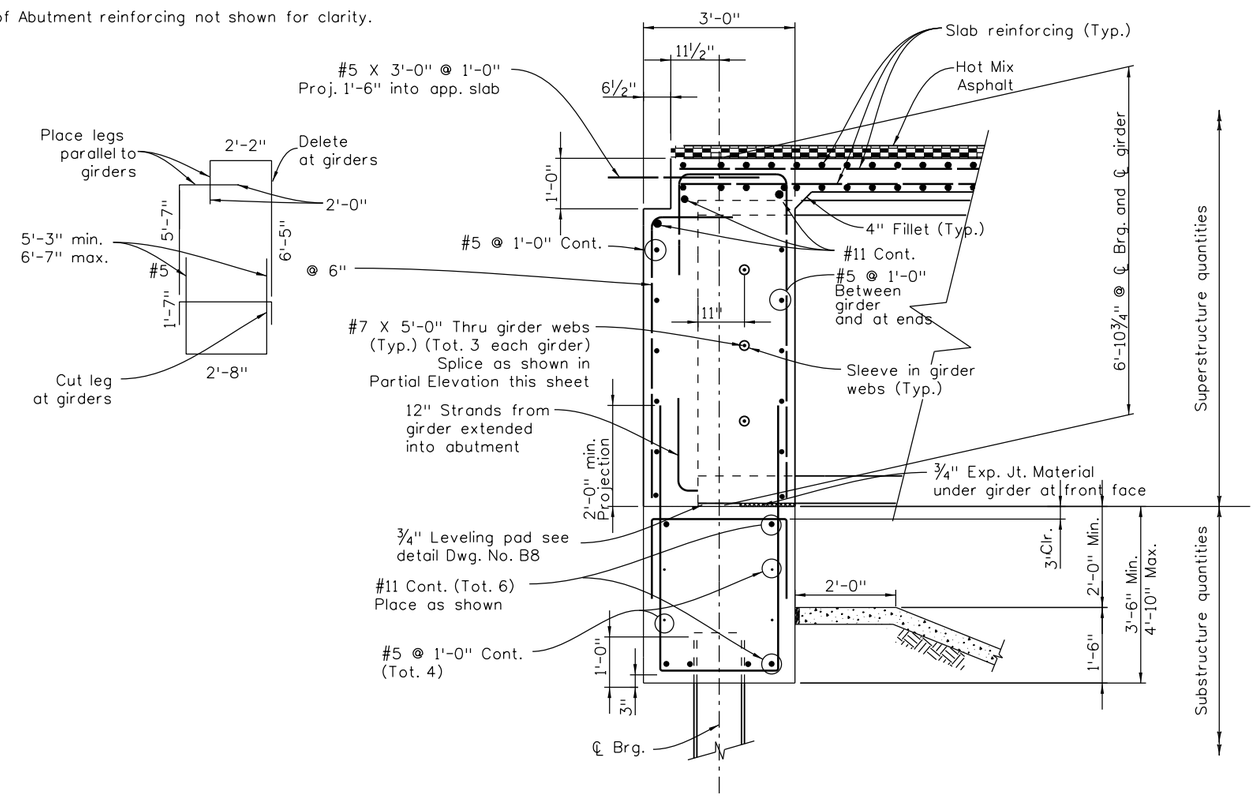


TYPICAL SECTION ABUT. 3

| Quantities | | | |
|---|---|---|---|
| Quantities By | INITIAL | RD | DATE 06/11 |
| Checked By | | MM/LF | 06/11 |

| Detail | | | |
|---|---|---|---|
| Detailed By | INITIAL | RD | DATE 06/11 |
| Checked By | | MM | 06/11 |

| Design | | | |
|---|---|---|---|
| Designed By | INITIAL | MM | DATE 06/11 |
| Checked By | | LF | 05/11 |

Print Date: 8/1/2011
File Name: 13Typical Section Abuts. 1 and 3 .dgn
Horiz. Scale: 1:1 Vert. Scale: As Noted
Staff Bridge Branch - Unit 0224 AJP

| Sheet Revisions | | |
|---|---|---|
| Date: | Comments | Init. |
| | | |
| | | |
| | | |
| | | |

Colorado Department of Transportation
DOT
DEPARTMENT OF TRANSPORTATION
8833 South Wadsworth Court
Littleton, CO 80128
Phone: 303-972-9112 FAX: 303-972-9114
Region 6 TG

As Constructed
No Revisions:
Revised:
Void:

TYPICAL SECTION ABUTMENT 1 AND 3

| | | | |
|---|---|---|---|
| Designer: | M. Mohseni | Structure Numbers | F-16-XD |
| Detailer: | R.Olmos | | |
| Sheet Subset: | Bridge | Subset Sheets: | B13 of 46 |

Project No./Code
C 088A-024
16628
Sheet Number

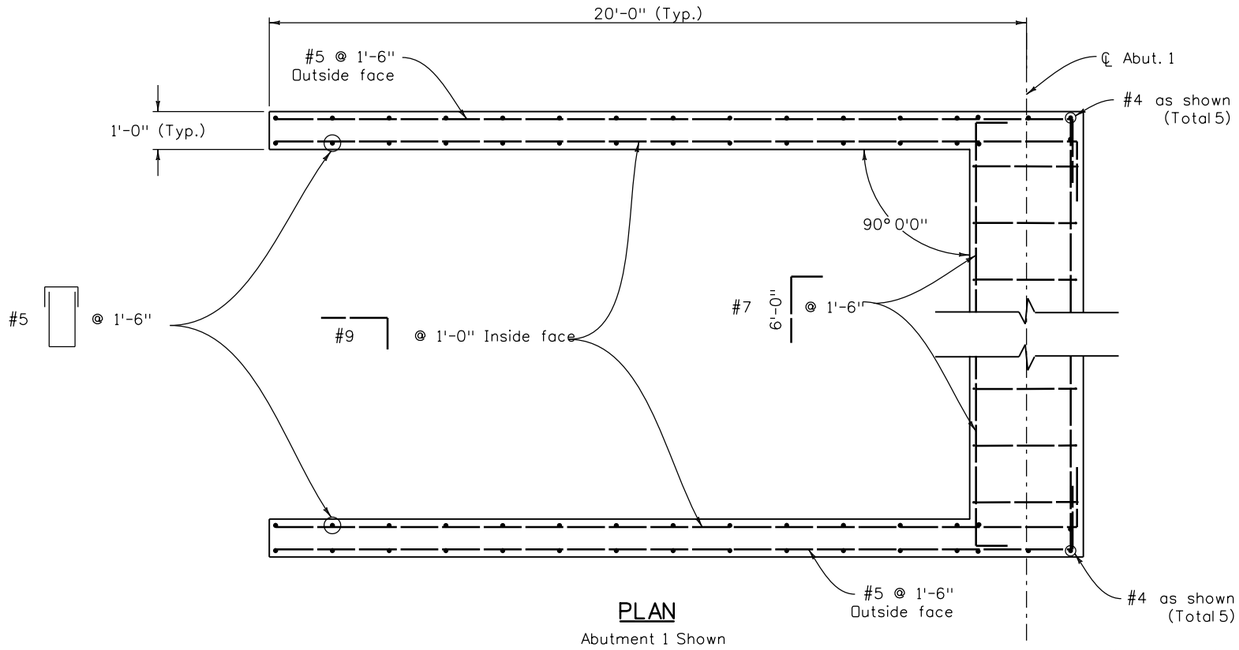


PLAN

Abutment 1 Shown

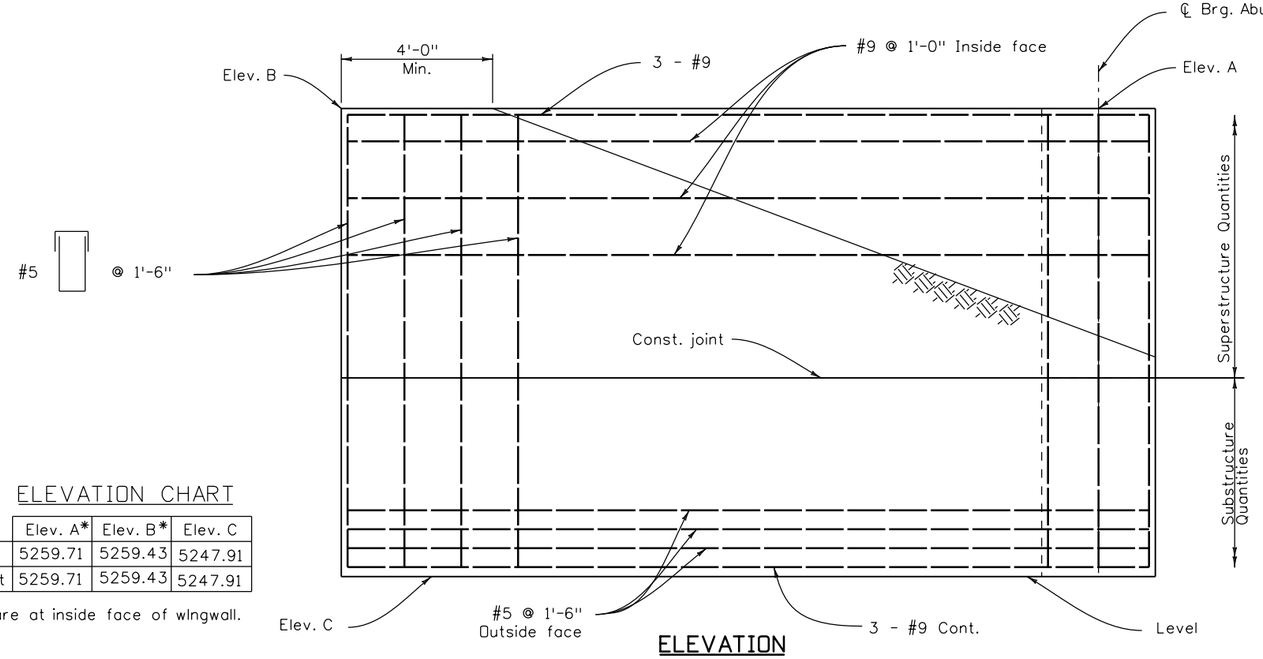


ELEVATION

ELEVATION CHART

| | | Elev. A* | Elev. B* | Elev. C |
|---|---|---|---|---|
| Abut. 1 | Wingwall Left | 5259.71 | 5259.43 | 5247.91 |
| | Wingwall Right | 5259.71 | 5259.43 | 5247.91 |

* Elevations shown are at inside face of wingwall.

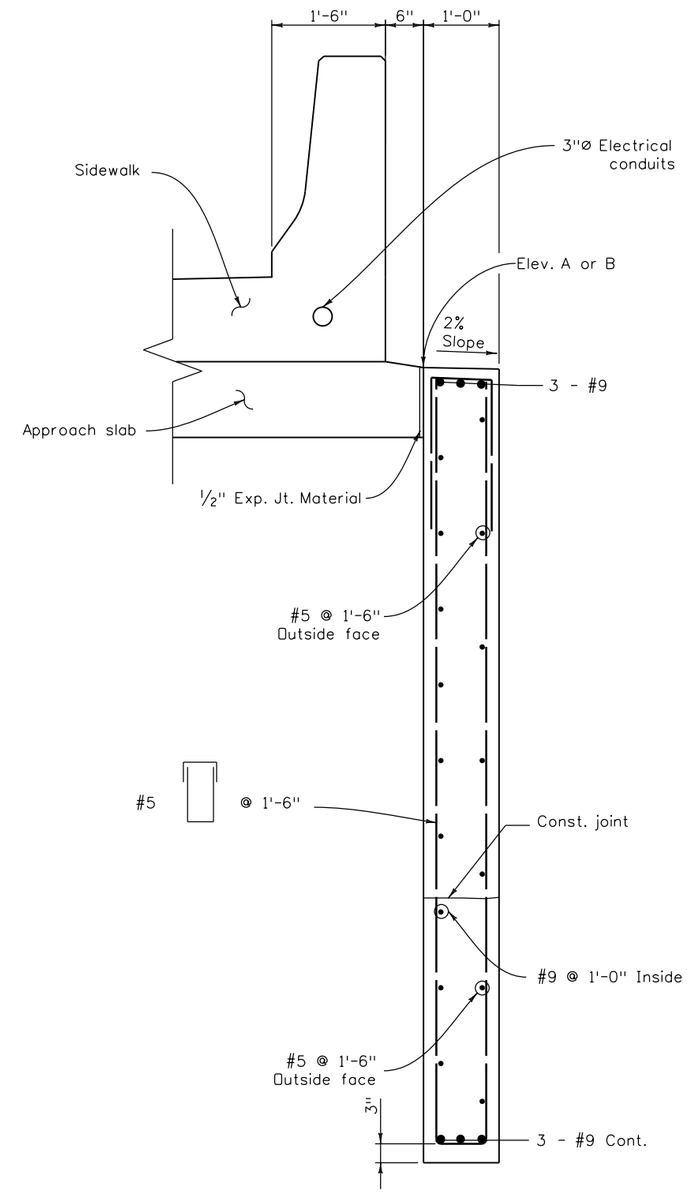


TYPICAL SECTION

| Design | | | Detail | | | Quantities | | |
|---|---|---|---|---|---|---|---|---|
| | INITIAL | DATE | | INITIAL | DATE | | INITIAL | DATE |
| Designed By | MM | 06/11 | Detailed By | RD | 06/11 | Quantities By | RD | 06/11 |
| Checked By | LF | 05/11 | Checked By | MM | 06/11 | Checked By | MM/LF | 06/11 |

| | | | |
|---|---|---|---|
| Print Date: 8/1/2011 | Sheet Revisions | Colorado Department of Transportation | As Constructed |
| File Name: 14Wingwall Details (Abut.1).dgn | Date: / Comments / Init. | 8833 South Wadsworth Court, Littleton, CO 80128, Phone: 303-972-9112 FAX: 303-972-9114 | No Revisions: |
| Horiz. Scale: 1:1 Vert. Scale: As Noted | | Region 6 TG | Revised: |
| Staff Bridge Branch - Unit 0224 AJP | | | Void: |

| WINGWALL DETAILS (AT ABUT. 1) | | | | Project No./Code |
|---|---|---|---|---|
| Designer: M. Mohseni | Structure Numbers | F-16-XO | | C 088A-024 |
| Detailer: R. Olmos | | | | 16628 |
| Sheet Subset: Bridge | Subset Sheets: B14 of 46 | | | Sheet Number |

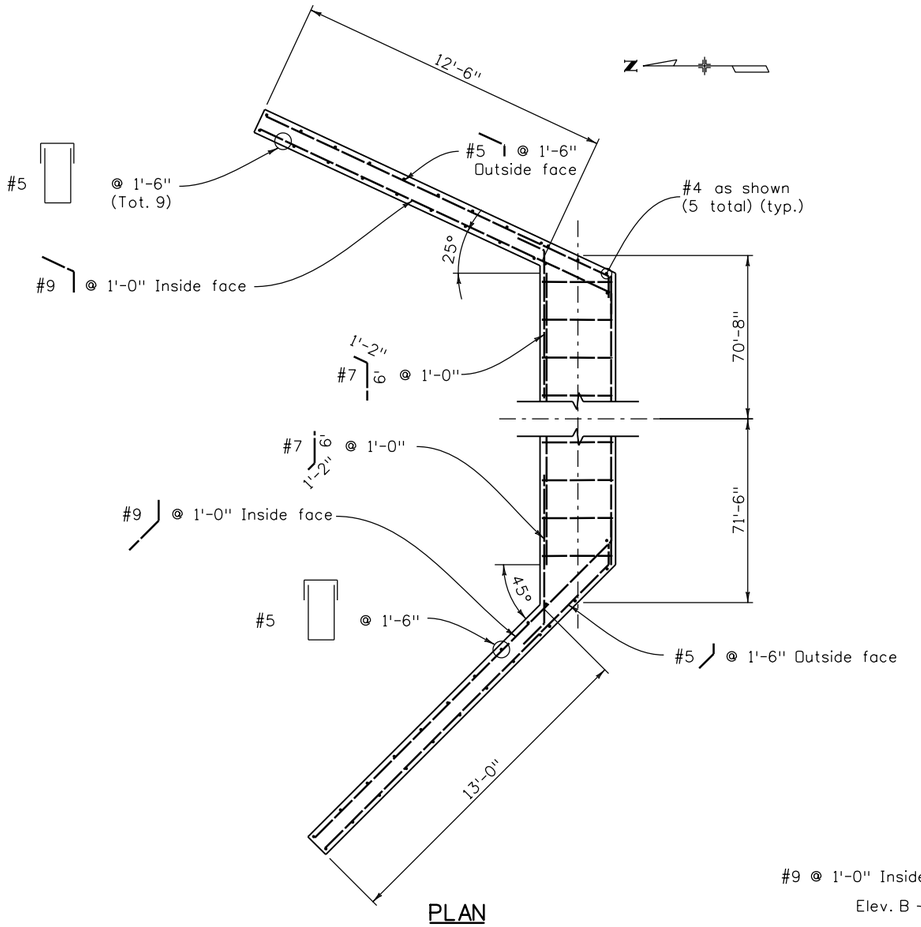


PLAN

Abutment 3 Shown

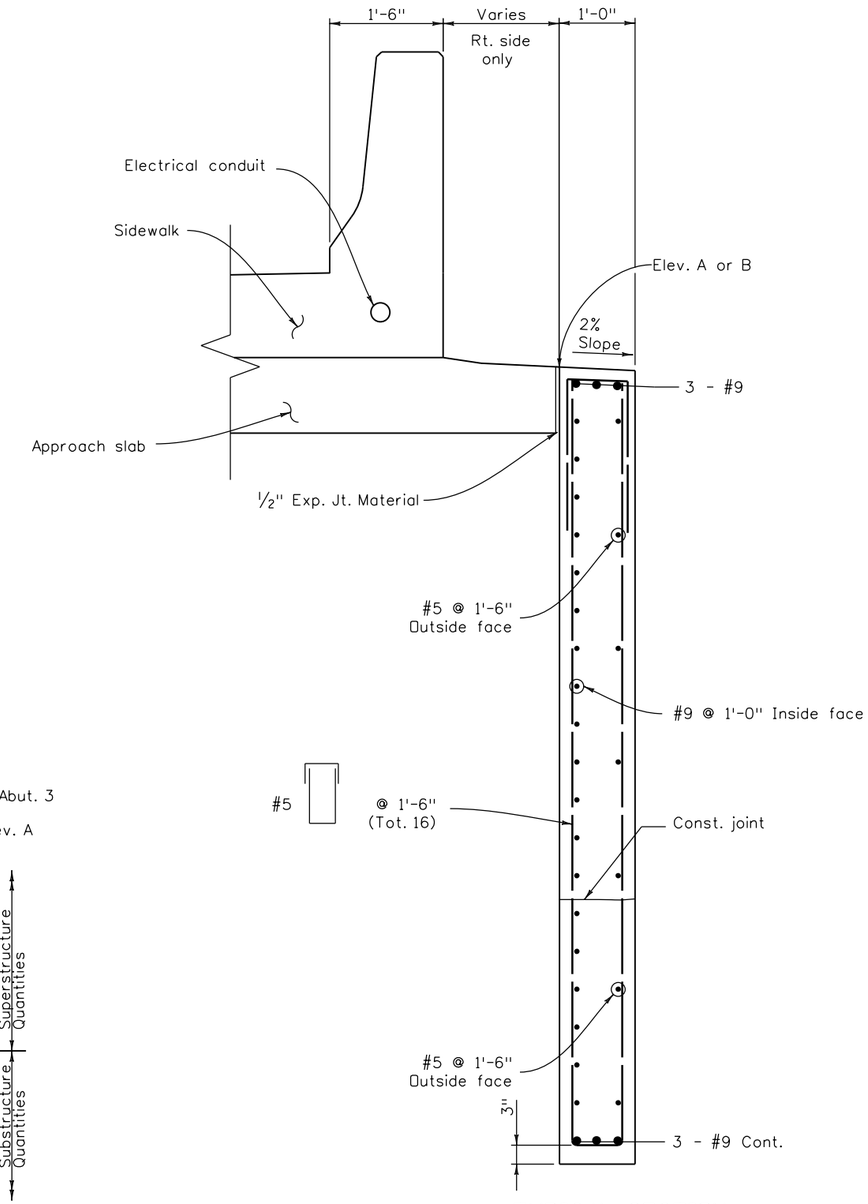


TYPICAL SECTION

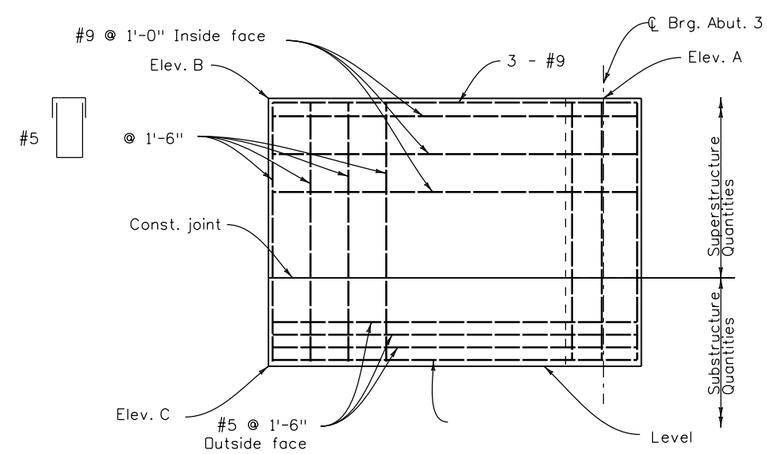


ELEVATION

ELEVATION CHART

| | | Elev. A* | Elev. B* | Elev. C |
|---|---|---|---|---|
| Abut. 3 | Wingwall Left | 5257.50 | 5257.30 | 5247.50 |
| | Wingwall Right | 5257.43 | 5257.31 | 5247.50 |

* Elevations shown are at inside face of wingwall.

| Design | | | | Detail | | | | Quantities | | | |
|---|---|---|---|---|---|---|---|---|---|---|---|
| | INITIAL | DATE | | INITIAL | DATE | | INITIAL | DATE | | INITIAL | DATE |
| Designed By | MM | 06/11 | Detailed By | RD | 06/11 | Quantities By | RD | 06/11 | | | |
| Checked By | LF | 05/11 | Checked By | MM | 06/11 | Checked By | MM/LF | 06/11 | | | |

Print Date: 8/1/2011
File Name: 15 Wingwall Details (Abut.3).dgn
Horiz. Scale: 1:1 Vert. Scale: As Noted
Staff Bridge Branch - Unit 0224 AJP

| Sheet Revisions | | |
|---|---|---|
| Date: | Comments | Init. |
| | | |
| | | |
| | | |
| | | |

Colorado Department of Transportation
DOT
DEPARTMENT OF TRANSPORTATION
8833 South Wadsworth Court
Littleton, CO 80128
Phone: 303-972-9112 FAX: 303-972-9114
Region 6 TG

As Constructed
No Revisions:
Revised:
Void:

WINGWALL DETAILS (AT ABUT. 3)

| | | | |
|---|---|---|---|
| Designer: | M. Mohseni | Structure Numbers | F-16-XD |
| Detailer: | R. Olmos | | |
| Sheet Subset: | Bridge | Subset Sheets: | B15 of 46 |

Project No./Code
C 088A-024
16628
Sheet Number

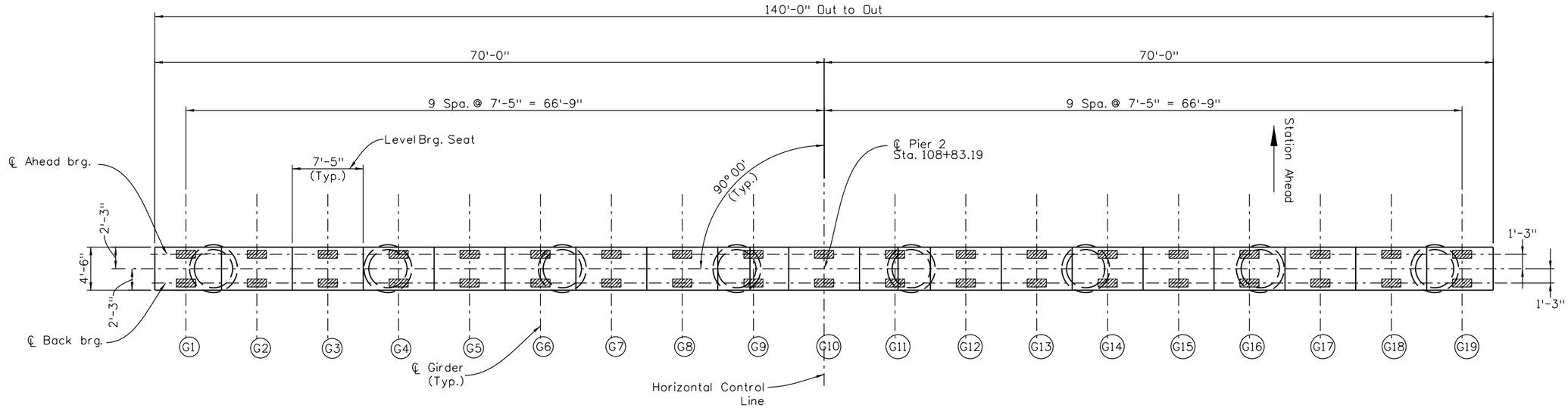


## PLAN

**NOTE:**

All exposed surfaces of Pier to 2'-0" below finished grade Fed. color No. 32630 (tan).

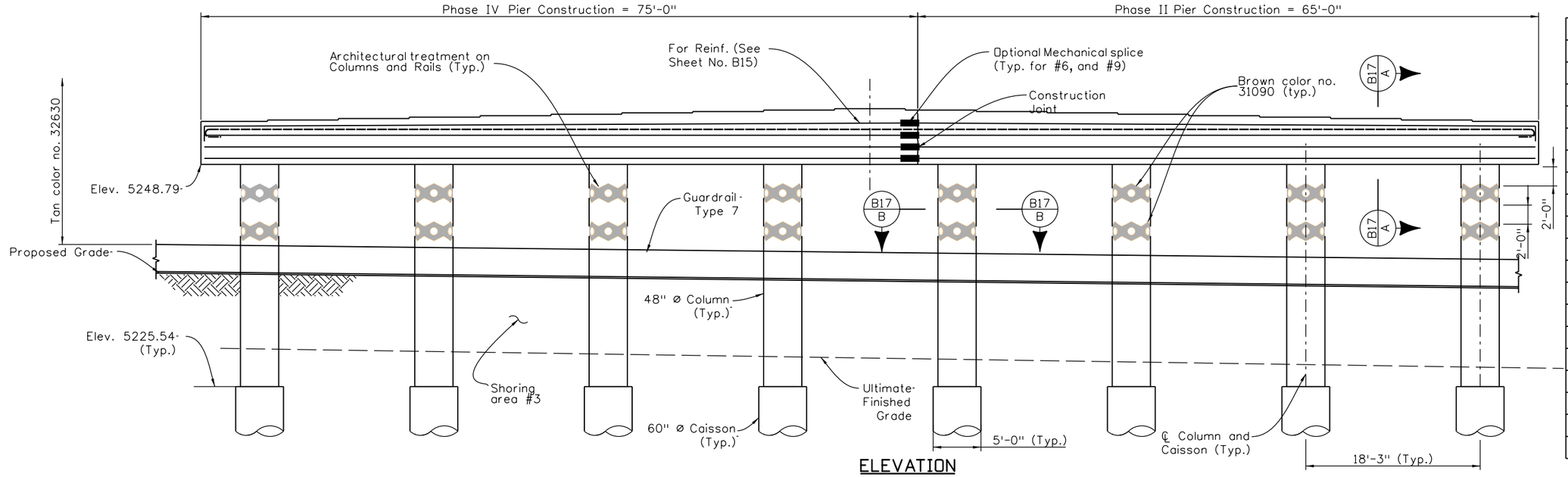


## ELEVATION

**SEAT ELEVATION TABLE**

| Location | Elevation |
|---|---|
| Girder 1 | 5253.29 |
| Girder 2 | 5253.44 |
| Girder 3 | 5253.59 |
| Girder 4 | 5253.73 |
| Girder 5 | 5253.88 |
| Girder 6 | 5254.03 |
| Girder 7 | 5254.18 |
| Girder 8 | 5254.33 |
| Girder 9 | 5254.47 |
| Girder 10 | 5254.62 |
| Girder 11 | 5254.47 |
| Girder 12 | 5254.33 |
| Girder 13 | 5254.18 |
| Girder 14 | 5254.03 |
| Girder 15 | 5253.88 |
| Girder 16 | 5253.73 |
| Girder 17 | 5253.59 |
| Girder 18 | 5253.44 |
| Girder 19 | 5253.29 |

| Design | | | |
|---|---|---|---|
| | INITIAL | DATE | |
| Designed By | MM | 06/11 | |
| Checked By | LF | 05/11 | |

| Detail | | | |
|---|---|---|---|
| | INITIAL | DATE | |
| Detailed By | RD | 06/11 | |
| Checked By | MM | 06/11 | |

| Quantities | | | |
|---|---|---|---|
| | INITIAL | DATE | |
| Quantities By | RD | 06/11 | |
| Checked By | MM/LF | 06/11 | |

Print Date: 8/1/2011
File Name: 16Pier 2 Details.dgn
Horiz. Scale: None Vert. Scale: As Noted
Staff Bridge Branch - Unit 0224 AJP

**Sheet Revisions**

| Date: | Comments | Init. |
|---|---|---|
| | | |
| | | |
| | | |
| | | |


Colorado Department of Transportation
8833 South Wadsworth Court
Littleton, CO 80128
Phone: 303-972-9112 FAX: 303-972-9114
Region 6 TG


As Constructed
No Revisions:
Revised:
Void:

**PIER 2 DETAILS**

| | | | |
|---|---|---|---|
| Designer: | M. Mohseni | Structure Numbers | F-16-XD |
| Detailer: | R. Olmos | | |
| Sheet Subset: | Bridge | Subset Sheets: | B16 of 46 |

Project No./Code
C 088A-024
16628
Sheet Number

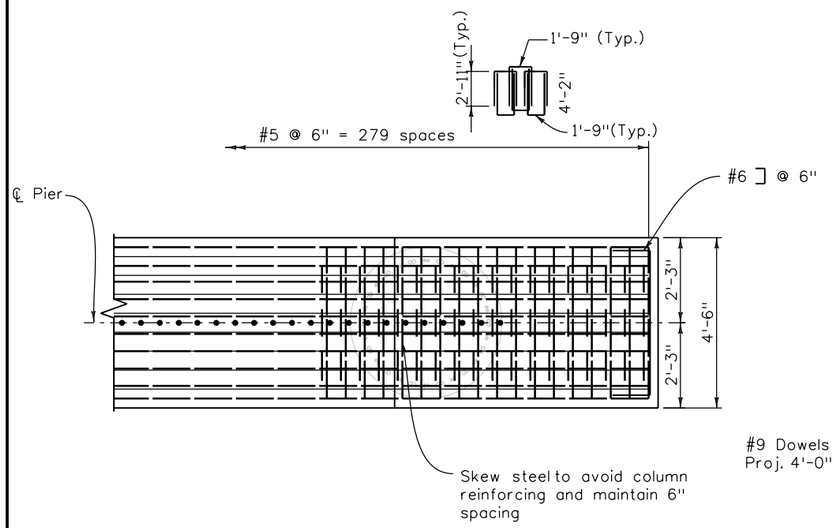


PLAN VIEW AT END OF PIER CAP

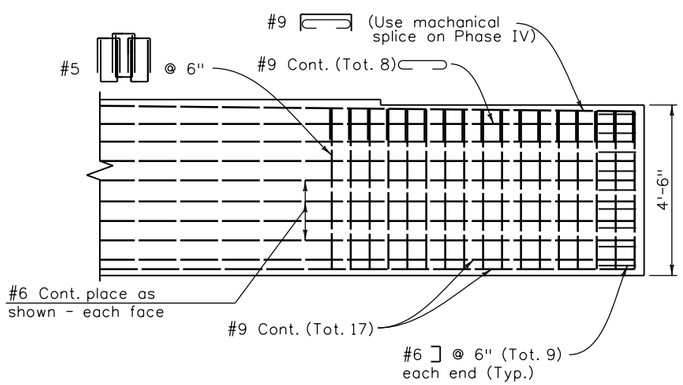


SECTION AT ℄ OF PIER CAP

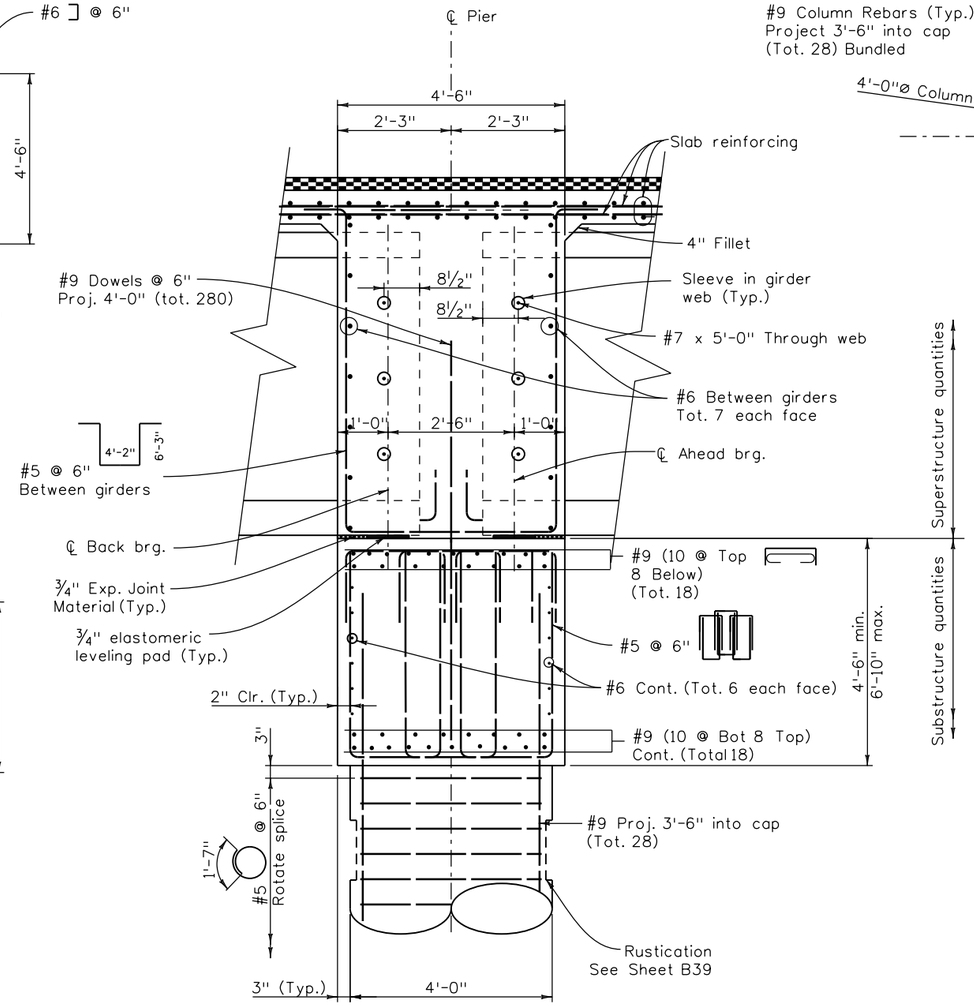


SECTION B16/A

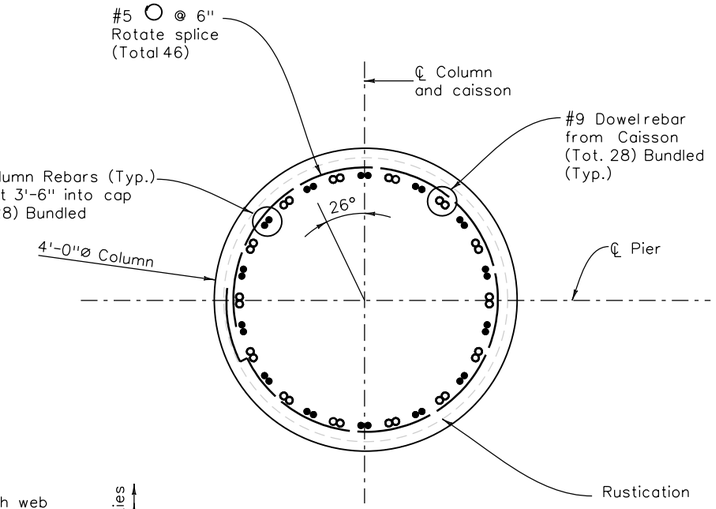


SECTION B16/B

| Design | INITIAL | DATE | Detail | INITIAL | DATE | Quantities | INITIAL | DATE |
|---|---|---|---|---|---|---|---|---|
| Designed By | MM | 06/11 | Detailed By | RD | 06/11 | Quantities By | RD | 06/11 |
| Checked By | LF | 05/11 | Checked By | MM | 06/11 | Checked By | MM/LF | 06/11 |

| | | | | | |
|---|---|---|---|---|---|
| Print Date: 8/1/2011 | Sheet Revisions | | | As Constructed | PIER DETAILS |
| File Name: 17Pier Details.dgn | Date: | Comments | Init. | No Revisions: | |
| Horiz. Scale: None Vert. Scale: As Noted | | | | Revised: | Designer: M. Mohseni / Structure Numbers: E-16-XO |
| Staff Bridge Branch - Unit 0224 AJP | | | | Void: | Detailer: R. Olmos |
| | | | | | Sheet Subset: Bridge / Subset Sheets: B17 of 46 |

Colorado Department of Transportation
8833 South Wadsworth Court
Littleton, CO 80128
Phone: 303-972-9112 FAX: 303-972-9114
Region 6 TG

Project No./Code: C 088A-024
16628
Sheet Number

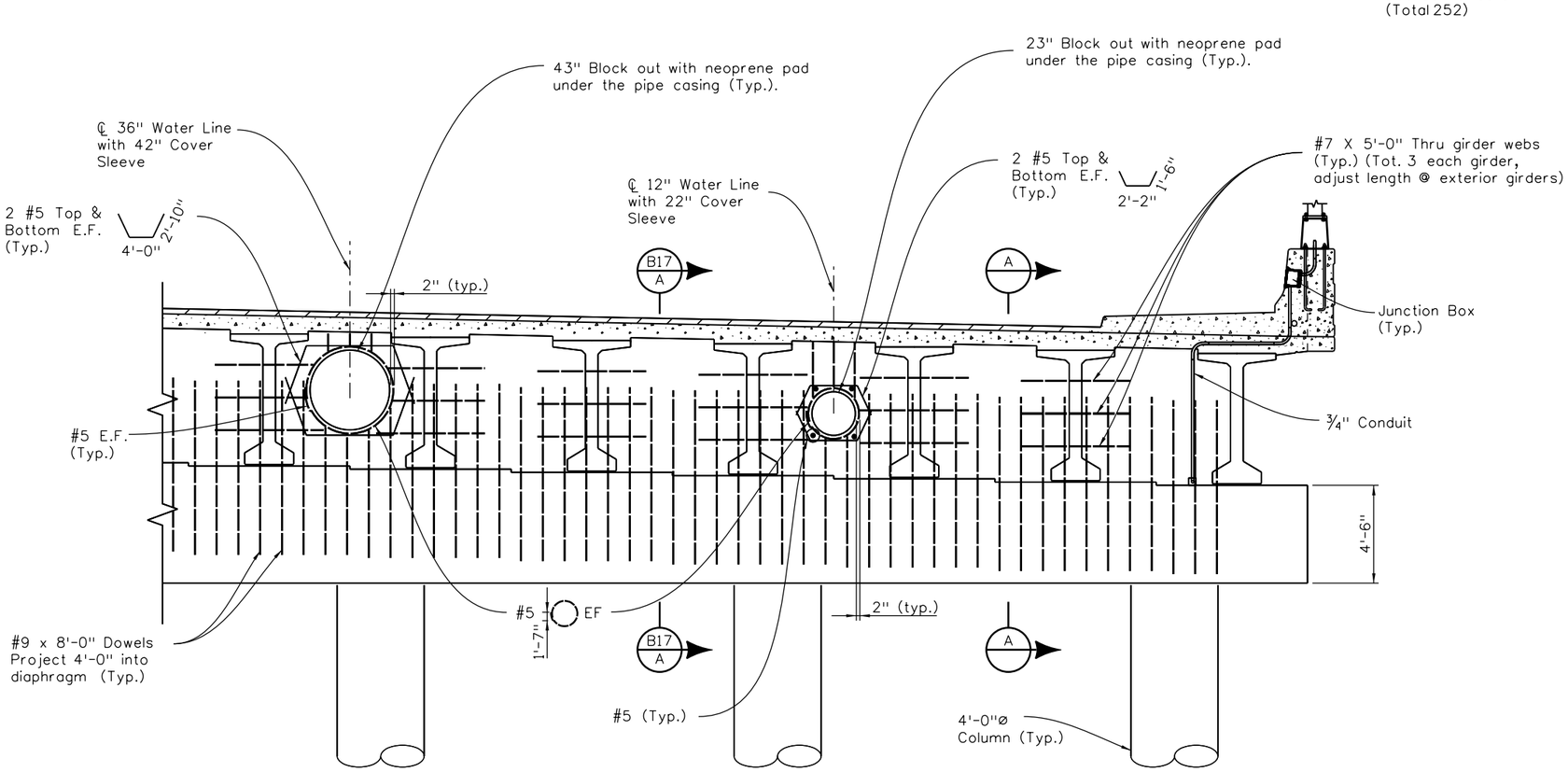


ELEVATION

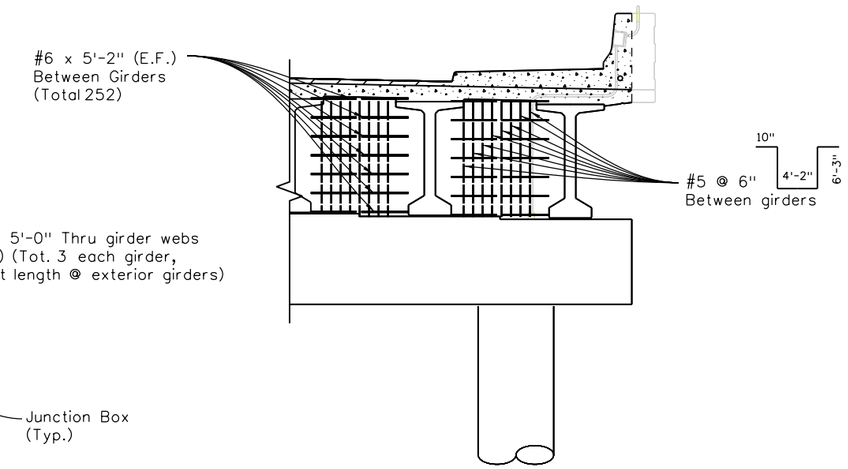


SECTION A

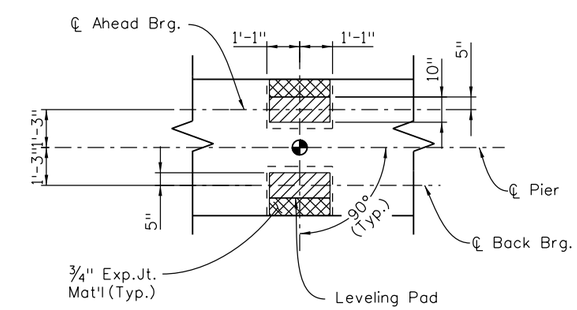


TYPICAL BEARING DETAIL

| Design | | | | Detail | | | | Quantities | | | |
|---|---|---|---|---|---|---|---|---|---|---|---|
| | INITIAL | DATE | | | INITIAL | DATE | | | INITIAL | DATE |
| Designed By | MM | 06/11 | Detailed By | RD | 06/11 | Quantities By | RD | 06/11 |
| Checked By | LF | 05/11 | Checked By | MM | 06/11 | Checked By | MM/LF | 06/11 |

| | | | |
|---|---|---|---|
| Print Date: 8/1/2011 | | | |
| File Name: 18Pier Diaphragm and Brg. Detail.dgn | | | |
| Horiz. Scale: None | Vert. Scale: As Noted | | |
| Staff Bridge Branch - Unit 0224 | AJP | | |

Sheet Revisions

| Date: | Comments | Init. |
|---|---|---|
| | | |
| | | |
| | | |
| | | |

Colorado Department of Transportation
8833 South Wadsworth Court
Littleton, CO 80128
Phone: 303-972-9112 FAX: 303-972-9114
Region 6 TG

As Constructed
No Revisions:
Revised:
Void:

PIER DIAPHRAGM AND BEARING DETAILS

| | | | |
|---|---|---|---|
| Designer: | M. Mohseni | Structure Numbers | F-16-XD |
| Detailer: | R. Olmos | | |
| Sheet Subset: | Bridge | Subset Sheets: | B18 of 46 |

Project No./Code
C 088A-024
16628
Sheet Number

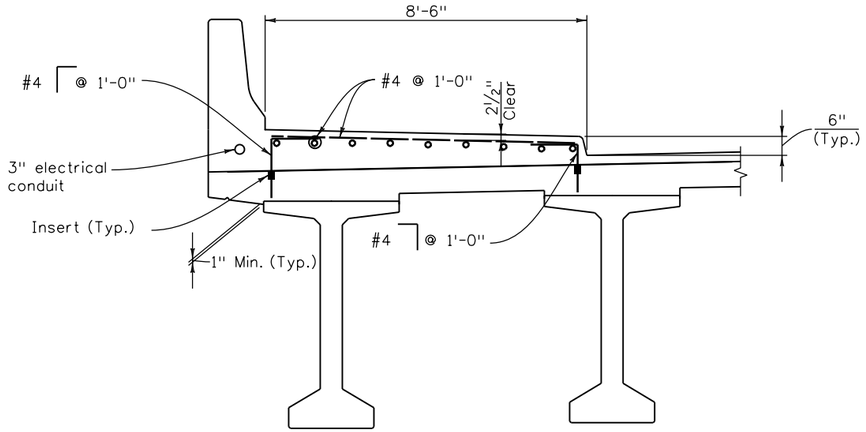


SIDEWALK REINFORCING

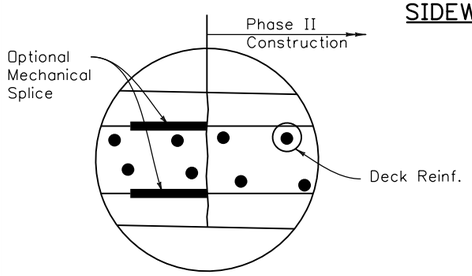


DETAIL I

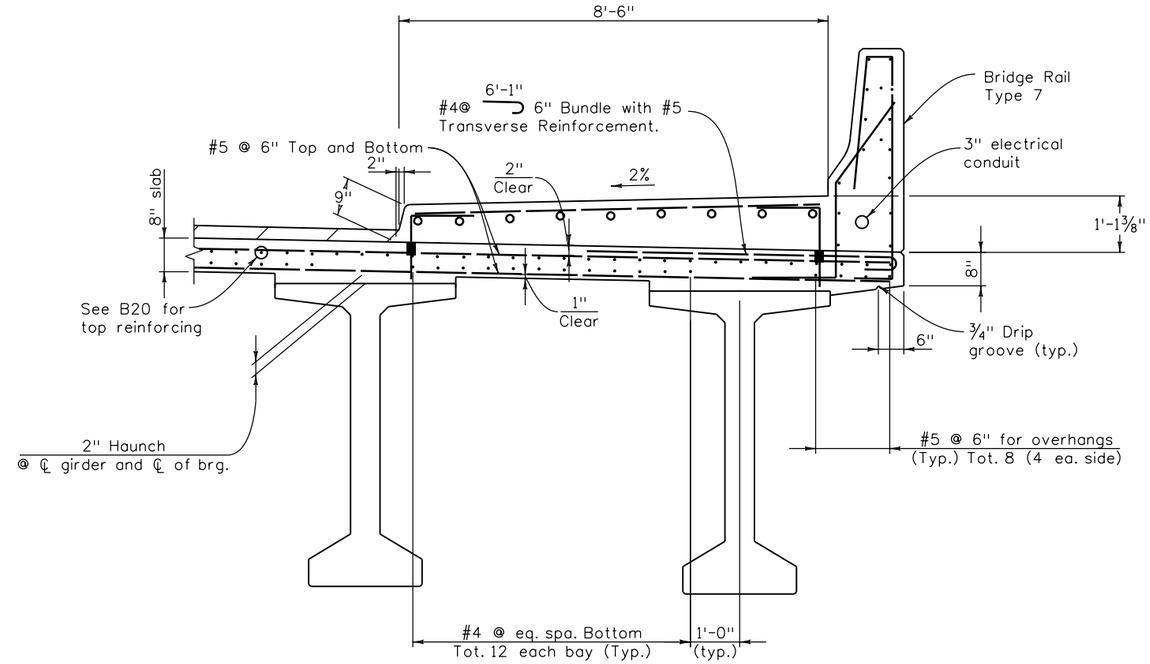


SLAB REINFORCING

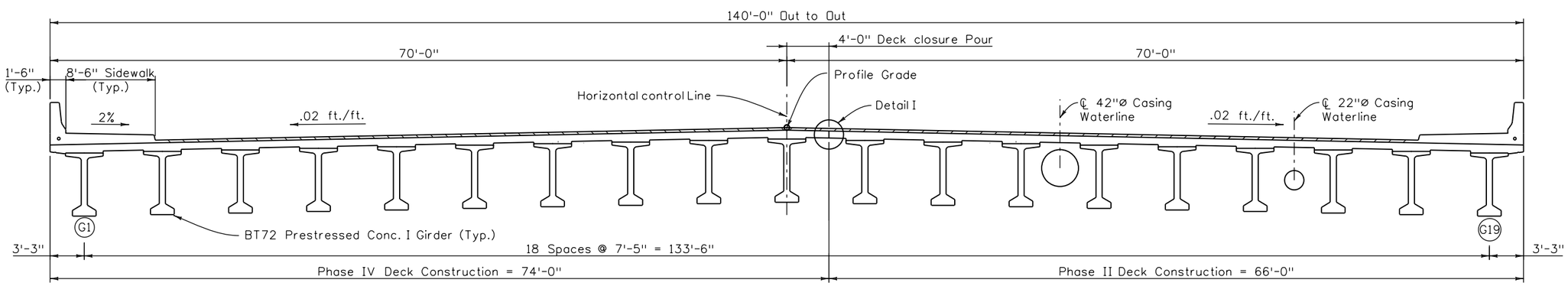


TYPICAL SECTION

| Design | INITIAL | DATE |
|---|---|---|
| Designed By | MM | 06/11 |
| Checked By | LF | 05/11 |

| Detail | INITIAL | DATE |
|---|---|---|
| Detailed By | RD | 06/11 |
| Checked By | MM | 06/11 |

| Quantities | INITIAL | DATE |
|---|---|---|
| Quantities By | RD | 06/11 |
| Checked By | MM/LF | 06/11 |

R:\DLMOS 11:57:26 AM

Print Date: 8/1/2011
File Name: 19Super Details 1 of 2.dgn
Horiz. Scale: None Vert. Scale: As Noted
Unit Information 0224 AJP

| Sheet Revisions | | |
|---|---|---|
| Date: | Comments | Init. |
| | | |
| | | |
| | | |
| | | |

Colorado Department of Transportation
8833 South Wadsworth Court
Littleton, CO 80128
Phone: 303-972-9112 FAX: 303-972-9114
Region 6 TG

As Constructed
No Revisions:
Revised:
Void:

SUPERSTRUCTURE DETAILS
1 of 2

Designer: M.Mohseni
Detailer: R. Olmos
Sheet Subset: Bridge
Structure Numbers: F-16-XD
Subset Sheets: B19 of 46

Project No./Code
C 088A-024
16628
Sheet Number

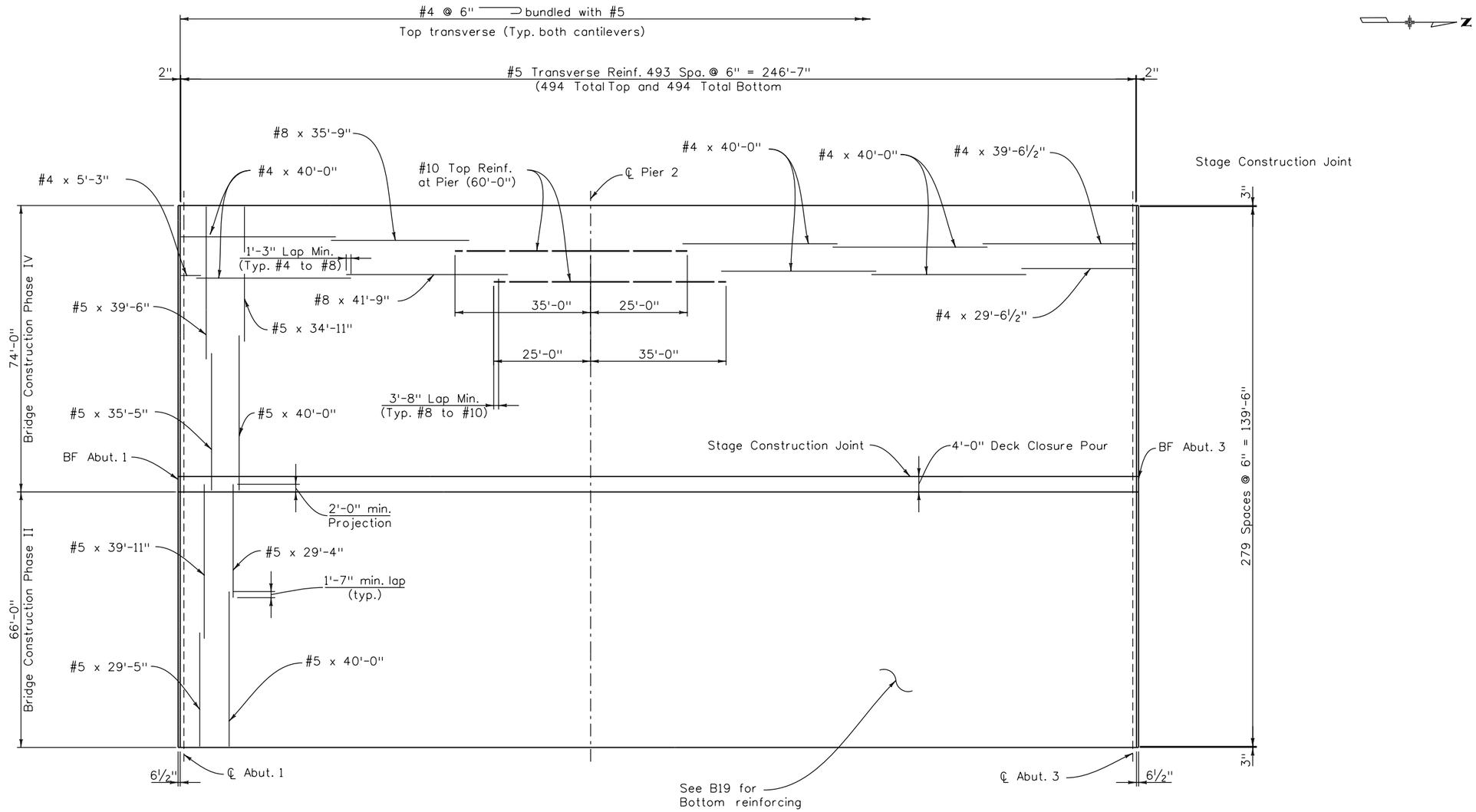


## SLAB REINFORCING

For reinforcing in the overhang in the bottom and bottom longitudinal reinforcing see Typical Slab Reinforcing details on sheet B18

| Design | | INITIAL | DATE |
|---|---|---|---|
| | Designed By | MM | 06/11 |
| | Checked By | LF | 05/11 |

| Detail | | INITIAL | DATE |
|---|---|---|---|
| | Detailed By | RD | 06/11 |
| | Checked By | MM | 06/11 |

| Quantities | | INITIAL | DATE |
|---|---|---|---|
| | Quantities By | RD | 06/11 |
| | Checked By | MM/LF | 06/11 |

| | |
|---|---|
| Print Date: 8/1/2011 | |
| File Name: 20Super Details 2 of 2.dgn | |
| Horiz. Scale: 1" = 30' | Vert. Scale: As Noted |
| Unit Information 0224 | AJP |

| Sheet Revisions | | |
|---|---|---|
| Date: | Comments | Init. |
| | | |
| | | |
| | | |
| | | |

Colorado Department of Transportation
8833 South Wadsworth Court
Littleton, CO 80128
Phone: 303-972-9112 FAX: 303-972-9114
Region 6 TG

| As Constructed |
|---|
| No Revisions: |
| Revised: |
| Void: |

SUPERSTRUCTURE DETAILS
2 of 2

| | | | |
|---|---|---|---|
| Designer: | M.Mohseni | Structure Numbers | F-16-XD |
| Detailer: | R. Olmos | | |
| Sheet Subset: | Bridge | Subset Sheets: | B20 of 46 |

| Project No./Code |
|---|
| C 088A-024 |
| 16628 |
| Sheet Number |

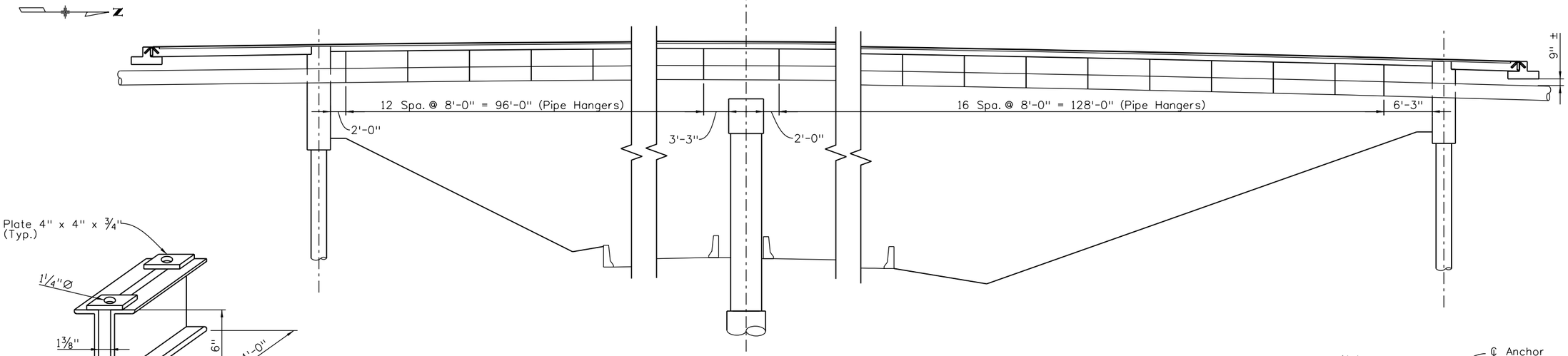


## 12"ø WATER LINE PROFILE

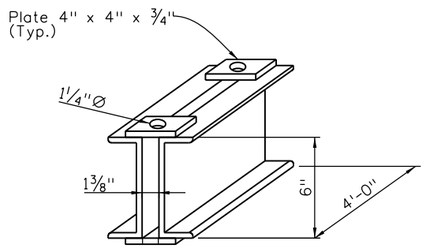


## SECTION "A"

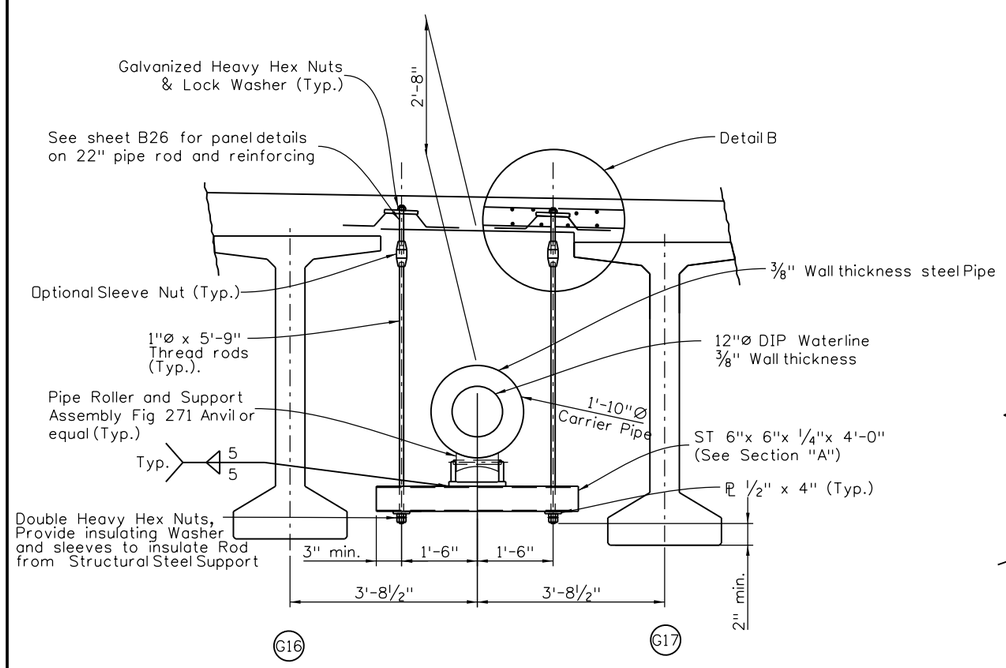


## PIPE HANGER DETAIL

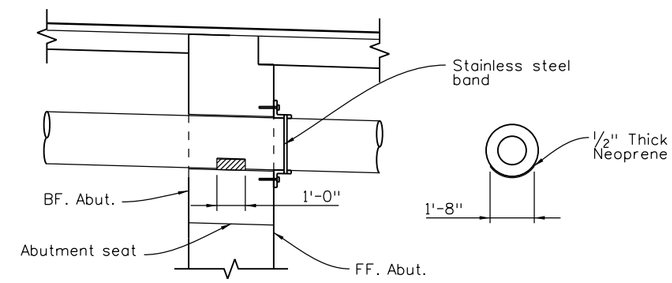


## NEOPRENE DETAILS FOR PIPE 42" AND 22"

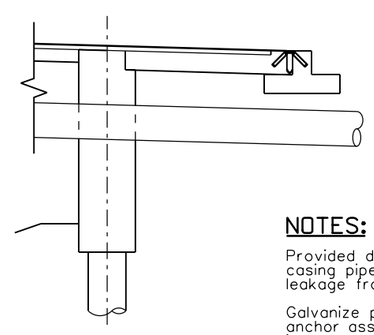

## SECTION ABUT. 3

### NOTES:

Provided drain holes in the casing pipes to detail any leakage from water lines. (Typ.).

Galvanize plates, nuts and bar anchor assembly after fabrication in accordance with ASTM123.

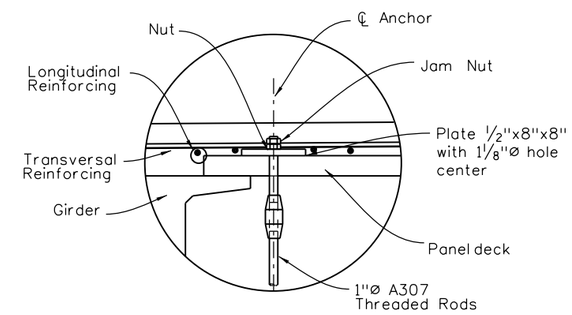


## DECK PANEL OPTION

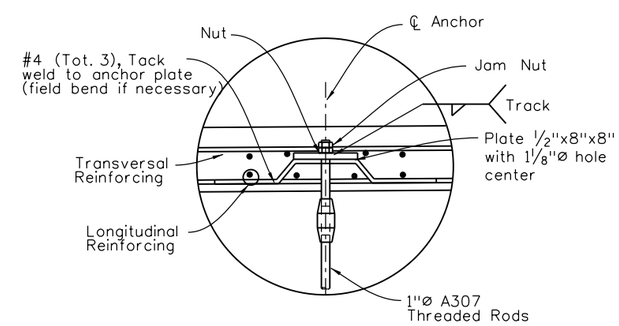


## CAST-IN-PLACE OPTION

## DETAIL B

| Design | | | | Detail | | | | Quantities | | | |
|---|---|---|---|---|---|---|---|---|---|---|---|
| | INITIAL | DATE | | INITIAL | DATE | | INITIAL | DATE | | INITIAL | DATE |
| Designed By | MM | 06/11 | Detailed By | RD | 06/11 | Quantities By | RD | 06/11 | | | |
| Checked By | LF | 05/11 | Checked By | MM | 06/11 | Checked By | MM/LF | 06/11 | | | |

| | | | | | |
|---|---|---|---|---|---|
| Print Date: 8/1/2011 | | Sheet Revisions | | | |
| File Name: 21Pipe Hanger1 Details(22).dgn | | Date: | Comments | Init. | |
| Horiz. Scale: None Vert. Scale: As Noted | | | | | |
| Staff Bridge Branch - Unit 0224 AJP | | | | | |

Colorado Department of Transportation
8833 South Wadsworth Court
Littleton, CO 80128
Phone: 303-972-9112 FAX: 303-972-9114
Region 6 TG

| As Constructed | PIPE HANGER DETAILS (22") | | | Project No./Code |
|---|---|---|---|---|
| No Revisions: | | | | C 088A-024 |
| Revised: | Designer: M. Mohseni | Structure Numbers | F-16-XO | 16628 |
| Void: | Detailer: R. Olmos | | | Sheet Number |
| | Sheet Subset: Bridge | Subset Sheets: | B21 of 46 | |

R:\OLMOS 11:57:32 AM

fussneckers 11:57:32 AM \\Public\bridge common\0224\16628_Federal_6th\My Project\21Pipe Hanger1 Details(22).dgn

## NOTE:

1. Girders 13 and 14 shall be cast with 1¼"Ø sleeve holes in the top flange to accommodate pipe rod hangers. (Typ.)
2. Sleeper slab footer may be cut as shown to make room for pipe crossing. See Special Sleeper Detail.

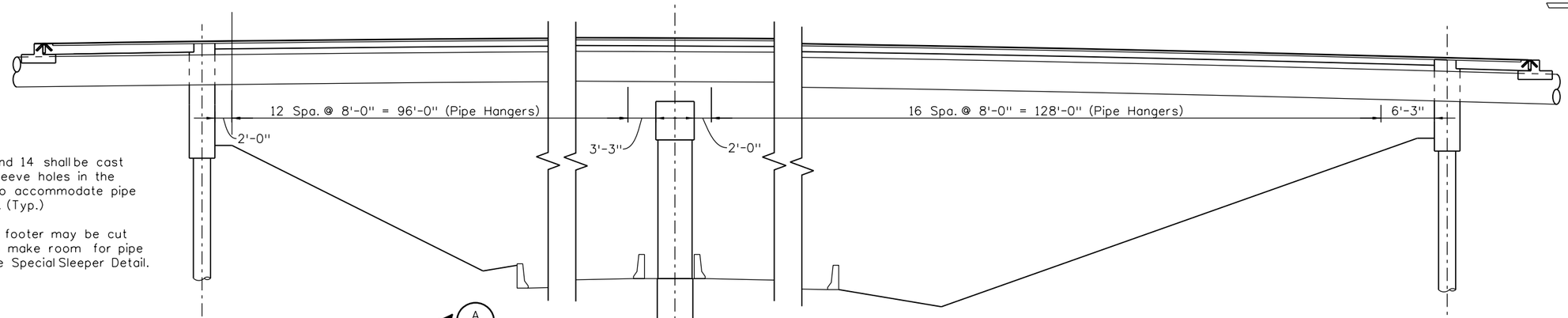


30"Ø WATER LINE PROFILE

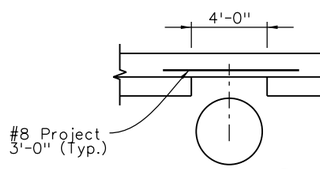


SECTION A

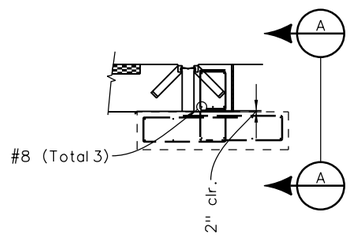


SPECIAL SLEEPER DETAIL

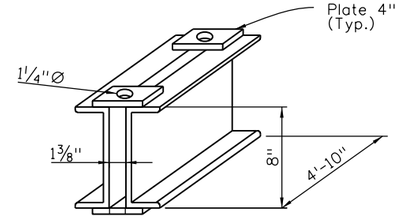


SECTION "A"

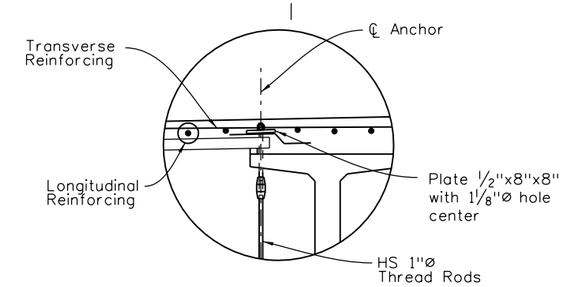


DECK PANEL OPTION

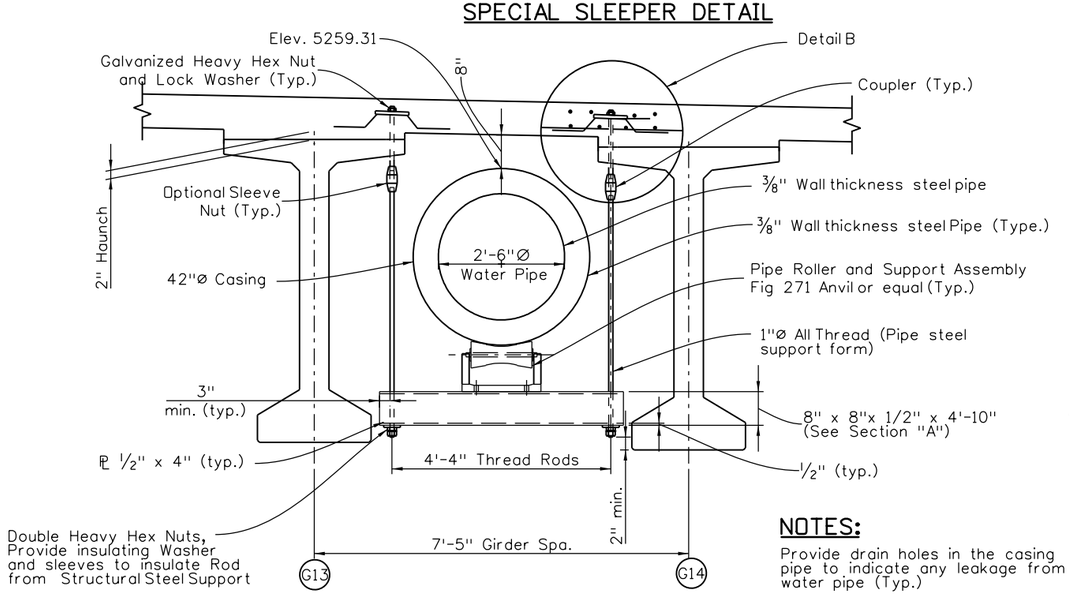


PIPE HANGER DETAIL

## NOTES:

Provide drain holes in the casing pipe to indicate any leakage from water pipe (Typ.)

Galvanize plates, bars, nuts, and anchor assembly after fabrication in accordance with ASTM123.

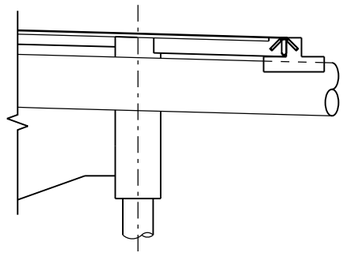

SECTION ABUT. 3

## NOTES:

Galvanize plate and bar anchor assembly after fabrication.

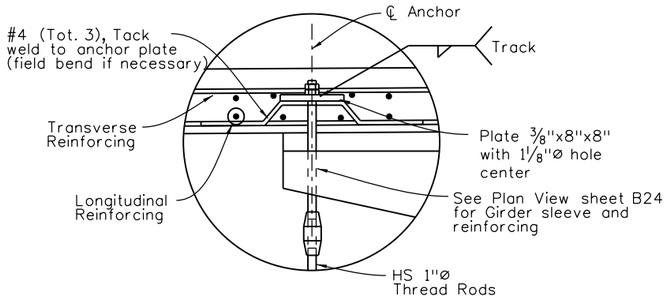


CAST-IN-PLACE OPTION

DETAIL B

(See sheet B26 for Optional Panel Deck Details)

| Quantities | | | |
|---|---|---|---|
| Quantities By | INITIAL | DATE | |
| Checked By | RO | 06/11 | |
| | MM/LF | 06/11 | |

| Detail | | | |
|---|---|---|---|
| Detailed By | INITIAL | DATE | |
| Checked By | RO | 06/11 | |
| | MM | 06/11 | |

| Design | | | |
|---|---|---|---|
| Designed By | INITIAL | DATE | |
| Checked By | MM | 06/11 | |
| | LF | 05/11 | |

| | | | |
|---|---|---|---|
| Print Date: 8/5/2011 | | | |
| File Name: 22Pipe Hanger Details(42).dgn | | | |
| Horiz. Scale: None | Vert. Scale: As Noted | | |
| Staff Bridge Branch - Unit 0224 | | | AJP |

Sheet Revisions

| Date: | Comments | Init. |
|---|---|---|
| | | |
| | | |
| | | |
| | | |


Colorado Department of Transportation
8833 South Wadsworth Court
Littleton, CO 80128
Phone: 303-972-9112 FAX: 303-972-9114
Region 6 TG


As Constructed

No Revisions:

Revised:

Void:

PIPE HANGER DETAILS (42")

| | | | |
|---|---|---|---|
| Designer: | M. Mohseni | Structure Numbers | F-16-XD |
| Detailer: | R. Olmos | | |
| Sheet Subset: | Bridge | Subset Sheets: | B22 of 46 |

Project No./Code

C 088A-024

16628

Sheet Number

fussneckers 9:57:10 AM B:\0224\16628_Federal_6th\My Project\22Pipe Hanger Details(42).dgn

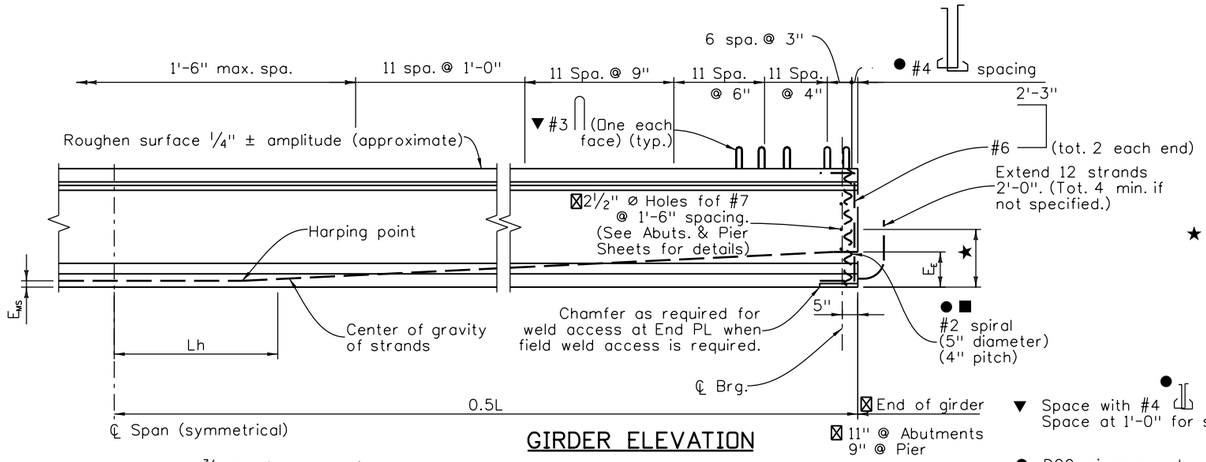


## GIRDER ELEVATION

▼ Space with #4 ● for stirrup spacings of 9" or more. Space at 1'-0" for stirrup spacings less than 9".

■ The Contractor may submit an alternate cross tie arrangement, at the end of the web, for approval by the Engineer.

● D20 wires may be used in lieu of #4.
2 - D20 wires may be used in lieu of #6.
D11 or W10.9 wires may be used in lieu of #3.
W5 wires my be used in lieu of #2.

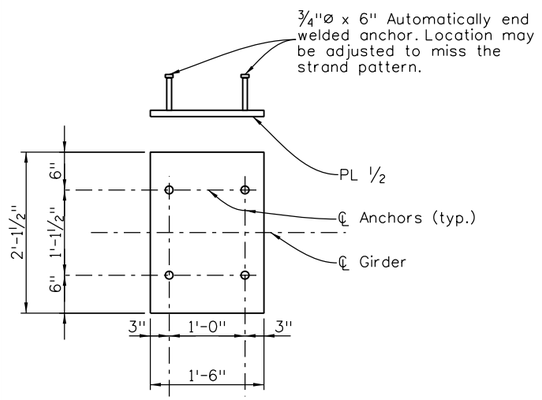


## END PLATE DETAIL

Galvanize after fabrication.

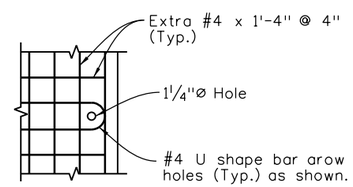


## HOLE THROUGH TOP FLANGE

Additional Reinforcing (Typ).

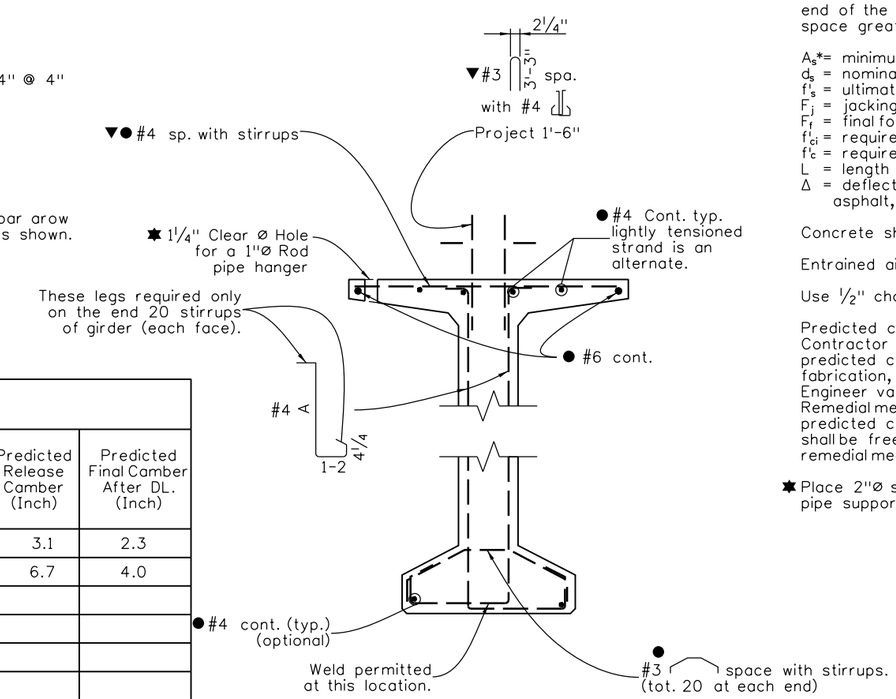


## TYPICAL GIRDER SECTION

A = girder depth - 3"

## GIRDER SCHEDULE

| Girder Type | Span No. | Girder No. | L (Feet) | Lh (Feet) | $A_s$* (Square Inch) | $E_{MS}$ (Inch) | $E_E$ (Inch) | $F_j$ (KIPS) | $F_f$ (KIPS) | Concrete Strength $f'_{ci}$ (PSI) | Concrete Strength $f'_c$ (PSI) | Δ (Inch) | Predicted Release Camber (Inch) | Predicted Final Camber After DL. (Inch) |
|---|---|---|---|---|---|---|---|---|---|---|---|---|---|---|
| BT72 | 1 | 1-19 | 104'-7" | 10.5' | 6.1 | 3.93 | 17.21 | 1231 | 1054 | 7250 | 8750 | .80 | 3.1 | 2.3 |
| BT72 | 2 | 1-19 | 139'-7" | 14' | 8.7 | 5.3 | 13.0 | 1758 | 1484 | 7250 | 8750 | 2.7 | 6.7 | 4.0 |
| | | | | | | | | | | | | | | |
| | | | | | | | | | | | | | | |
| | | | | | | | | | | | | | | |
| | | | | | | | | | | | | | | |
| | | | | | | | | | | | | | | |
| | | | | | | | | | | | | | | |

## NOTES:

All work necessary to fabricate and install the integral parts of the girder (including the intermediate diaphragms, 7/8"ø threaded rods, and leveling pads), as shown on the plans, shall be included in the bid price for Item No. 618, Prestressed Concrete I (BT__), with a pay unit of Feet which shall be measured by dimension L.

When approved by the Engineer, a minimum of tack welding will be permitted on ASTM A706 uncoated reinforcing steel.

Reinforcing projecting from the top of the girder and reinforcing within eight feet of an expansion device in the bridge deck shall be epoxy coated. Damaged coating on girder reinforcing need not be repaired. The minimum cover for reinforcing steel is 1".

At girder ends not embedded in concrete diaphragms, cut strands off 1" below the surface of the concrete and finish with an approved epoxy grout. At girder ends embedded in concrete diaphragms, cut strands to project 3", except as shown. Do not make cosmetic repairs (damage less than 1 1/2" deep) to the parts of the girders embedded in concrete.

Use low relaxation strands meeting the requirements of ASTM A-416 Grade 270. The minimum clear distance between groups or individual strands shall be 2.3($d_s$) but not less than 1 1/4". The minimum cover for prestressing steel is 1 1/2".

A minimum of two harping points shall be used per girder. Harped strands shall be well distributed at the girder ends, starting within 4" of the top of the girder and distributed such that there is no space between strands greater than 1'-0" at the end of the girder. As an alternate the Contractor may place #4 ● x 10'-0" in the sides of the end of the web parallel to the harped strands such that there is no space greater than 1'-0".

$A_s$*= minimum area of the prestressing steel.
$d_s$ = nominal strand diameter.
$f'_s$ = ultimate strength of prestressing steel.
$F_j$ = jacking force per girder.
$F_f$ = final force per girder after all losses.
$f'_{ci}$ = required concrete strength at release of prestress force.
$f'_c$ = required concrete strength at 28 days of age.
L = length of girder along the grade of the girder.
Δ = deflection at centerline of span due to cast-in-place slab, diaphragms, asphalt, curbs, rails, and walks.

Concrete shall be Class PS.

Entrained air is not required for girder concrete.

Use 1/2" chamfer on all corners, except as noted.

Predicted camber is the camber for the girder alone at 90 days. The Contractor shall limit the camber growth to a value not to exceed the predicted camber plus 1" prior to the deck pour by weighting, scheduling fabrication, post tensioning, or other means and must report to the Engineer values of camber which exceed the predicted camber plus 1". Remedial measures, as approved by the Engineer, shall be taken if the predicted camber plus 1" is exceeded. The approved remedial measures shall be free of any adverse impact. The costs associated with all remedial measures shall be borne by the Contractor.

✱ Place 2"ø sleeve girders 13 and 14 holes in top flange to accommodate pipe support rails hangers accordingly.

| Quantities | INITIAL | DATE |
|---|---|---|
| Quantities By | RQ | 06/11 |
| Checked By | MM/LF | 06/11 |

| Detail | INITIAL | DATE |
|---|---|---|
| Detailed By | RQ | 06/11 |
| Checked By | MM | 06/11 |

| Design | INITIAL | DATE |
|---|---|---|
| Designed By | MM | 06/11 |
| Checked By | LF | 05/11 |

Print Date: 8/1/2011
Drawing File Name: 23Prestressed Concrete I.dgn
Horiz. Scale: None Vert. Scale: As Noted
Unit Information 0224 AJP

| Sheet Revisions | | |
|---|---|---|
| Date: | Comments | Init. |
| | | |
| | | |
| | | |
| | | |

Colorado Department of Transportation
8833 South Wadsworth Court
Littleton, CO 80128
Phone: 303-972-9112 FAX: 303-972-9114
Region 6 TG

As Constructed
No Revisions:
Revised:
Void:

PRESTRESSED CONCRETE I

Designer: M. Mohseni
Detailer: R. Olmos
Sheet Subset: Bridge
Structure Numbers: F-16-XO
Subset Sheets: B23 of 46

Project No./Code
C 088A-024
16628
Sheet Number

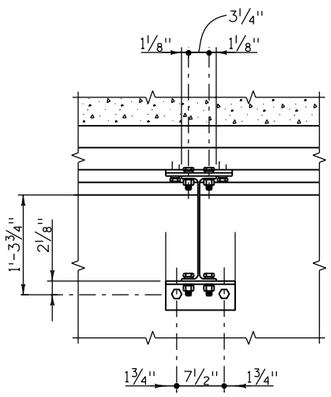


SECTION B/A

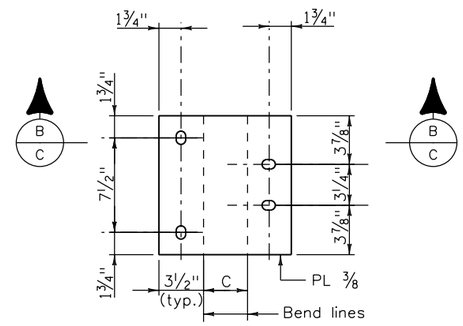


PLAN
(Before bending)

PLATE DETAIL

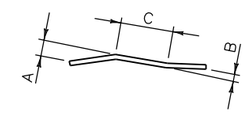


▲ SECTION B/C

## NOTES

All diaphragm materials, including bolts, nuts, and washers shall be galvanized. Galvanize after fabrication.

★ If the construction layout does not specify diaphragms, there shall be at least one diaphragm at mid span.

Bolts, nuts and lock washers may be zinc plated in lieu of being galvanized.

▲ Dimensions A, B and C shall be shown on the shop drawings.

The diaphragms may be placed on a skew such that they are between 80° and 100° to the girders. Additionally, all diaphragms shall be installed level.

The Contractor is responsible for determining necessary bracing requirements and for providing adequate bracing for the specific wind and weather conditions to be encountered for each specific project.

When bracing or diaphragms are required, no girders shall be erected and left unbraced. The intermediate diaphragms (when used) shall be connected to the adjacent girders simultaneously with the erection of the girders.

Use and installation of the intermediate diaphragms shall not relieve the Contractor of full responsibility to construct the Work in a manner which provides all necessary rigidity, supports all loads imposed, and provides in the finished structure the lines and grades indicated on the plans.

Diaphragms in bays between Girders 13,14, and 16,17 may be removed after the deck slab is cured in order to install water pipes and casing.

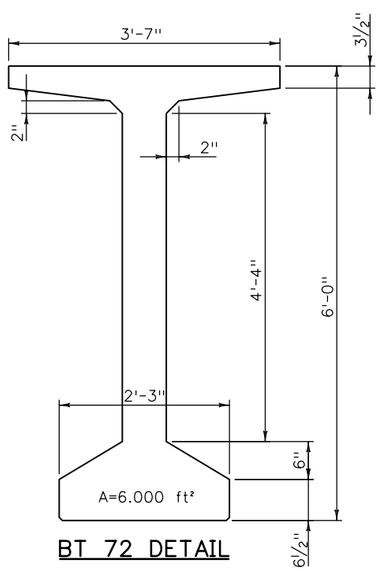


BT 72 DETAIL

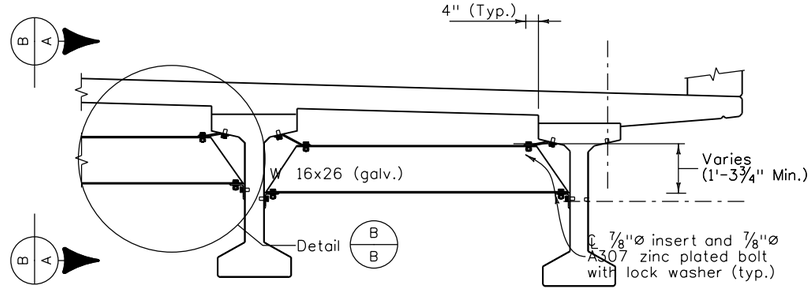


INTERMEDIATE DIAPHRAGM DETAILS

★ For location of diaphragms, see Construction Layout.

## NOTES

Diaphragms between Girders (13,14),(16,17) may be removed after the Deck is cured in order to install the water line.

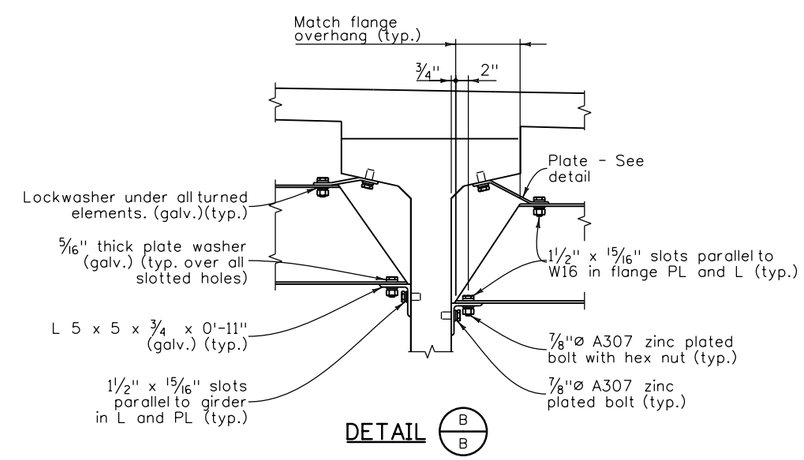


DETAIL B/B

| Quantities | | | |
|---|---|---|---|
| | | INITIAL | DATE |
| Quantities By | | RQ | 06/11 |
| Checked By | | MM/LF | 06/11 |

| Detail | | | |
|---|---|---|---|
| | | INITIAL | DATE |
| Detailed By | | RQ | 06/11 |
| Checked By | | MM | 06/11 |

| Design | | | |
|---|---|---|---|
| | | INITIAL | DATE |
| Designed By | | MM | 06/11 |
| Checked By | | LF | 05/11 |

| | | | | |
|---|---|---|---|---|
| Print Date: 8/1/2011 | | Sheet Revisions | | |
| Drawing File Name: 24Diaph Det.dgn | | Date: | Comments | Init. |
| Horiz. Scale: Varies | Vert. Scale: As Noted | | | |
| Unit Information | AJP | | | |

Colorado Department of Transportation
8833 South Wadsworth Court
Littleton, CO 80128
Phone: 303-972-9112 FAX: 303-972-9114
Region 6 TG

| As Constructed | | | | Project No./Code |
|---|---|---|---|---|
| No Revisions: | DIAPHRAGM DETAILS | | | C 088A-024 |
| Revised: | Designer: M. Mohseni | Structure Numbers | F-16-XO | 16628 |
| Void: | Detailer: R. Olmos | | | Sheet Number |
| | Sheet Subset: Bridge | Subset Sheets: B24 of 46 | | |

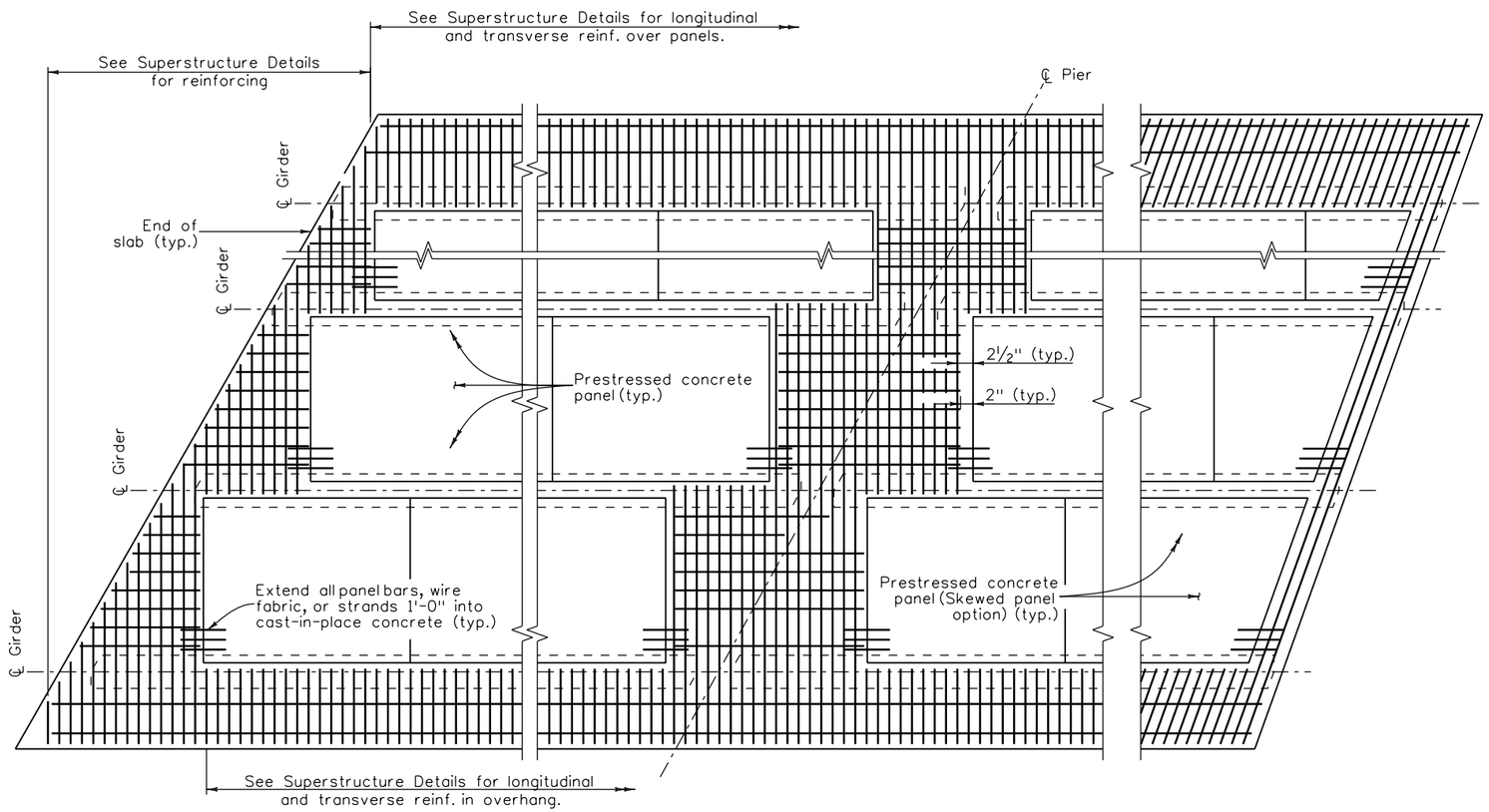


END OF SLAB
RECTANGULAR PANEL OPTION AND
SKEWS LESS THAN 70°

Rectangular panel option shall be used for skews less than 70°.

CONTINUOUS SLAB
OVER PIER

PART PLAN

END OF SLAB
SKEWED PANEL OPTION FOR
SKEWS 70° to 90°

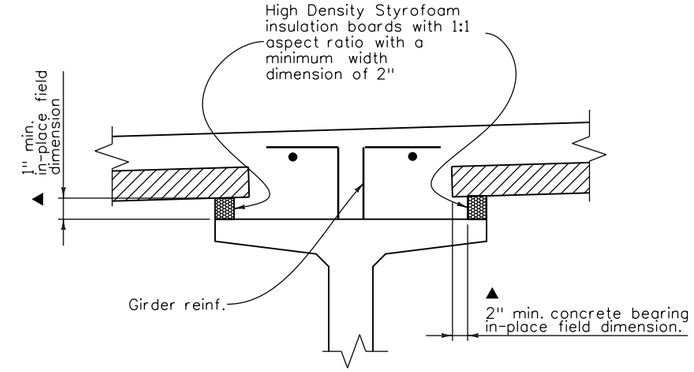


SUPPORT DETAIL

## NOTES:

Composite total slab designed for HS 25-44 and Alternate Military Loading.

All concrete shall be Class PS with release strength $f'_{ci}$ = 4500 psi and minimum 28 day strength $f'_c$ = 6000 psi. Entrained air is not required for precast panel deck form concrete. The strength shall be at least 5000 psi at the time of the deck pour.

Use ⅜"Ø low relaxation strands meeting the requirements of ASTM A416 grade 270. Jacking force per strand ($F_i$) shall be at least 17.2 kips. Final force per strand ($F_f$) is estimated to be 14.2 kips.

Installation of Bar U (#3) is mandatory. All four Bar U (#3) loops shall be used simultaneously for lifting the panels.

Care must be taken to ensure proper cleaning of construction debris off the tops of the panels and consolidation of concrete mortar under the edges of the panels. Water, dirt or other debris on top of the panels will inhibit the bond of the cast-in-place concrete. It is also important that adequate space (▲ min. 1" x 2") is provided for the concrete to fill the space under the panel as the slab concrete is placed. Panel lengths and width shall be determined by the Contractor and shown on the shop plans.

The Contractor is responsible for the stability of the panels on the girders. Erected panels shall be uniformly supported along the length of the panel. The Contractor is responsible for meeting the total slab thickness shown on the Superstructure Details.

All planes of reinforcing steel shown in the superstructure details are required for areas not formed with precast panels.

## NOTES:

For waterline hangers provide 1½"Ø min. holes in the panels as needed to accommodate the hangers for water pipes inserts into the panels
See Sheet B20, B21.

| Design | | | | Detail | | | | Quantities | | | |
|---|---|---|---|---|---|---|---|---|---|---|---|
| | INITIAL | DATE | | INITIAL | DATE | | INITIAL | DATE | | INITIAL | DATE |
| Designed By | MM | 06/11 | Detailed By | RD | 06/11 | Quantities By | RD | 06/11 | | | |
| Checked By | LF | 05/11 | Checked By | MM | 06/11 | Checked By | MM/LF | 06/11 | | | |

| | | | | | |
|---|---|---|---|---|---|
| Print Date: 8/1/2011 | Sheet Revisions | | | As Constructed | PRECAST PANEL DECK FORM |
| Drawing File Name: 25PreCast Panel Deck form.dgn | Date: | Comments | Init. | No Revisions: | Designer: M. Mohseni — Structure Numbers: F-16-XD |
| Horiz. Scale: None — Vert. Scale: As Noted | | | | Revised: | Detailer: R. Olmos |
| Unit Information 0224 — AJP | | | | Void: | Sheet Subset: Bridge — Subset Sheets: B25 of 46 |

Colorado Department of Transportation
8833 South Wadsworth Court
Littleton, CO 80128
Phone: 303-972-9112 FAX: 303-972-9114
Region 6 TG

Project No./Code
C 088A-024
16628
Sheet Number

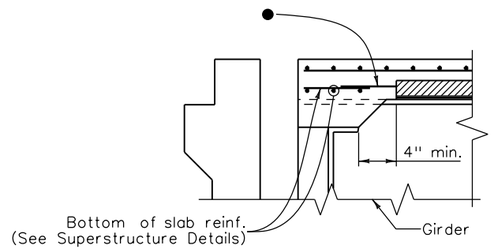


SECTION AT ABUTMENT

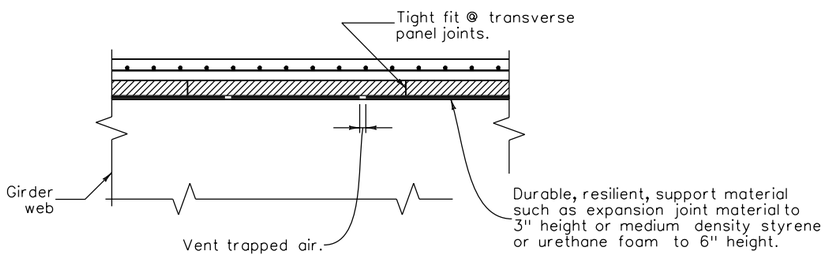


SECTION THRU TRANSVERSE PANEL JOINTS

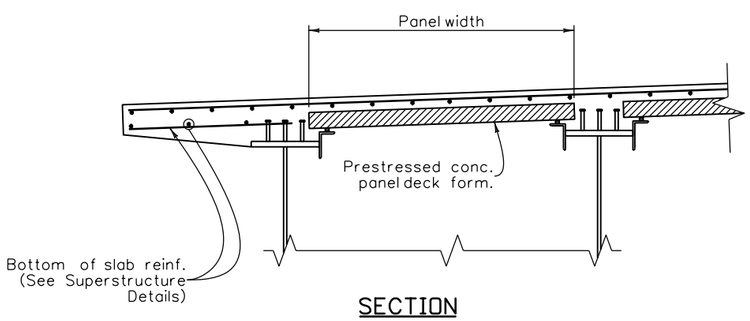


SECTION

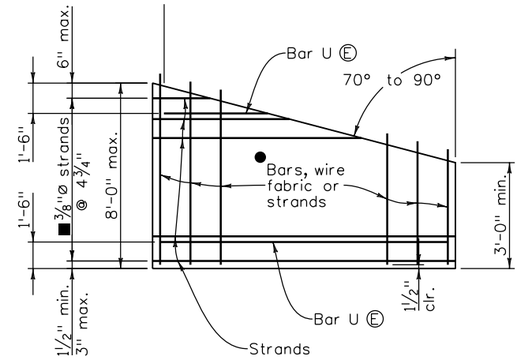


PLAN - SKEWS 70° TO 90°
OPTIONAL END PANEL

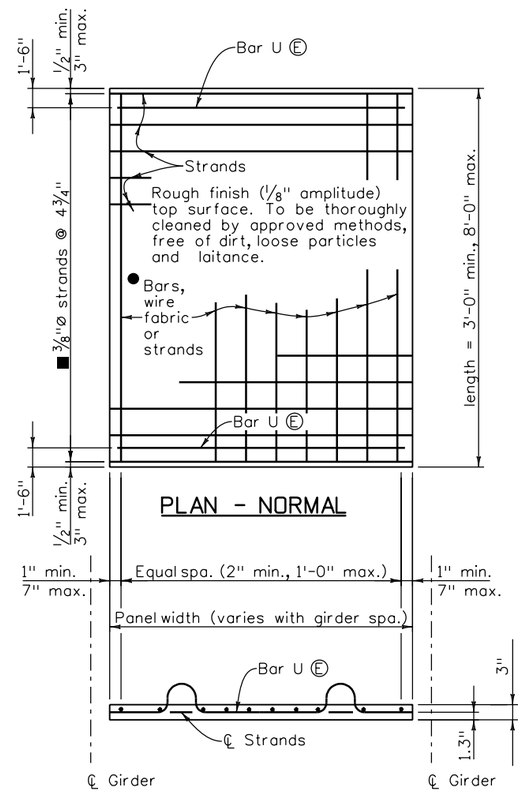


PRESTRESSED PANEL DETAILS

## NOTES:

Sawing of panels is acceptable in areas where projecting reinforcement is not required. It is desirable to have the prestressing strands project from the panels as long as the projecting strands do not interfere with other bridge components.

● Reinforcing perpendicular to strands may be deformed reinf. bars, welded wire fabric, or welded deformed bar mats, and shall be placed directly above the strands. Minimum area of reinforcing perpendicular to strands shall be 0.11 sq. in. per ft. Tensioned or untensioned strands may also be used. These individual bars or wires shall be no larger than .375" diameter. For location of longitudinal bar extensions, see sheet 2 of 2.

■ May be reduced to 3/8"Ø strands at 9 1/2" when the panel width is less than 5'-7" and the design span is less than 7'-7".

The longitudinal reinforcing steel in the cast-in-place portion of the deck may rest directly on the panels as necessary to obtain clearances at the top of deck, unless otherwise noted.

Ⓔ denotes epoxy coated reinforcing.

The tolerance on strand placement shall not exceed ±1/4".

The tolerance on panel thickness shall not exceed ±1/4".

Concentrated construction loads shall not exceed 500 lb for 3" panels, 700 lb for 3.5" panels, nor 1100 lb for 4" panels unless the load is distributed to less than 117 psf.

Total loads applied to any panel during construction shall not exceed 117 psf.

Bottom flexural cracks, sags greater than .5", or cambers greater than .5" will be considered evidence of mishandling, overloading, or exceeding allowable tolerances, and may be cause for rejecting panels at the Engineer's discretion.

★ Place extra #3 bar around rod hanger holes in the panel as shown below detail at pipe hanger

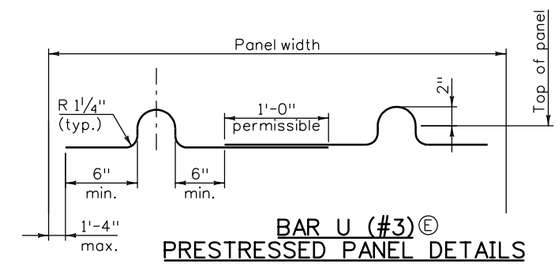


BAR U (#3) Ⓔ
PRESTRESSED PANEL DETAILS

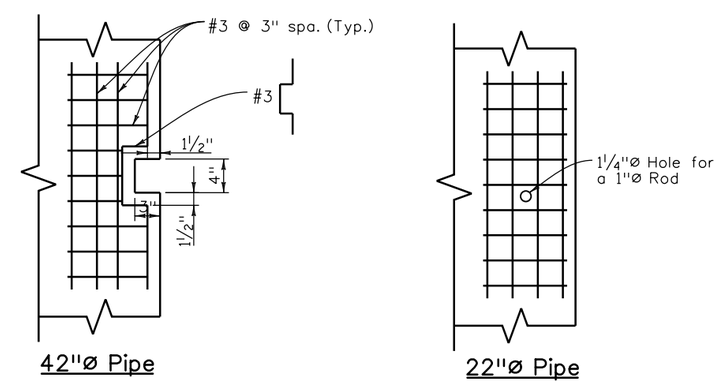


42"Ø Pipe

22"Ø Pipe

★ DETAIL AT PIPE (42") AND (22") HANGER RODS
(additional Reinforcing) (Optional Panel Deck Form)

| Quantities | INITIAL | DATE |
|---|---|---|
| Quantities By | RO | 06/11 |
| Checked By | MM/LF | 06/11 |

| Detail | INITIAL | DATE |
|---|---|---|
| Detailed By | RO | 06/11 |
| Checked By | MM | 06/11 |

| Design | INITIAL | DATE |
|---|---|---|
| Designed By | MM | 06/11 |
| Checked By | LF | 05/11 |

Print Date: 8/1/2011
Drawing File Name: 26PreCast Panel Deck Form.dgn
Horiz. Scale: None Vert. Scale: As Noted
Unit Information 0224 AJP

| Sheet Revisions | | |
|---|---|---|
| Date: | Comments | Init. |
| | | |
| | | |
| | | |
| | | |

Colorado Department of Transportation
DOT
DEPARTMENT OF TRANSPORTATION
8833 South Wadsworth Court
Littleton, CO 80128
Phone: 303-972-9112 FAX: 303-972-9114
Region 6 TG

As Constructed
No Revisions:
Revised:
Void:

PRECAST PANEL DECK FORM

| | | | |
|---|---|---|---|
| Designer: | M. Mohseni | Structure Numbers | F-16-XO |
| Detailer: | R. Olmos | | |
| Sheet Subset: | Bridge | Subset Sheets: | B26 of 46 |

Project No./Code
C 088A-024
16628
Sheet Number

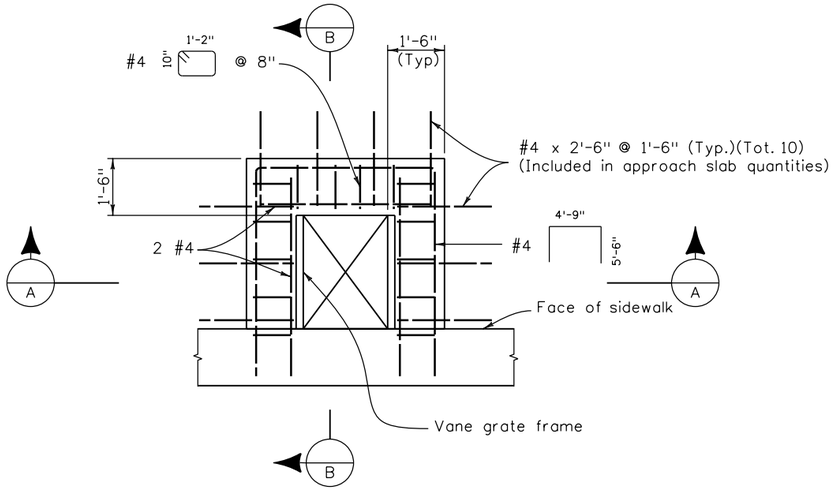


PLAN

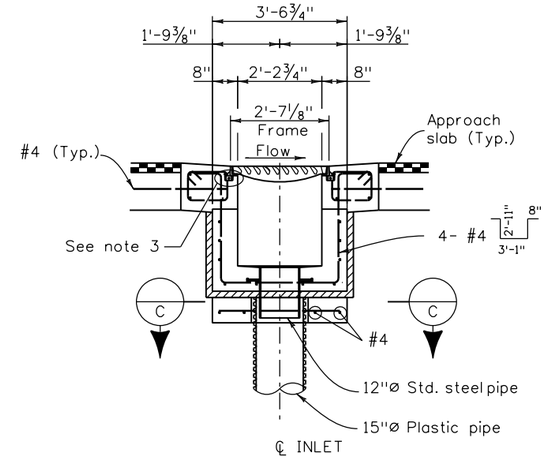


SECTION A

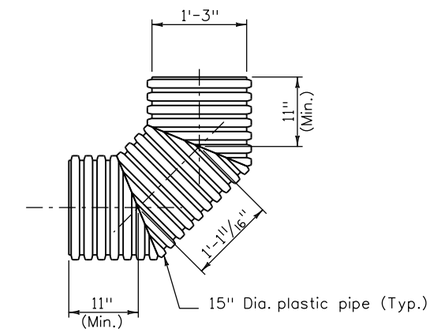


90° ELBOW DETAIL

FOR INFORMATION ONLY

| Description | Unit | Per inlet |
|---|---|---|
| Concrete Class D (Bridge) | CY | 1.86 |
| Reinforcing Steel (Epoxy Coated) | LB | 237 |

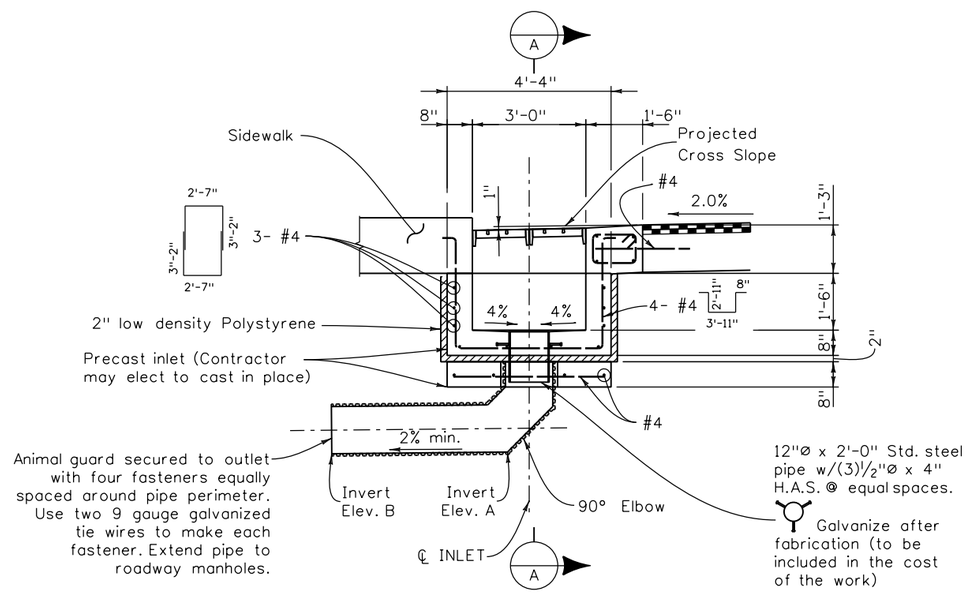


SECTION B

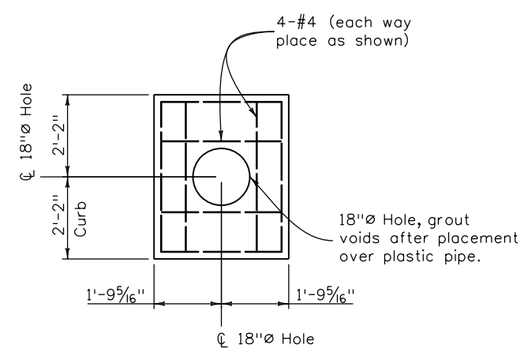


SECTION C

## INLET NOTES:

1. Cutting of approach slab reinforcement will not be allowed
2. Grate to be installed during construction of inlet with the vane grate bolted in place to the frame. The cost of the grate, grate frame, expansion joint material, expanded polystyrene, plastic pipe, and steel pipe shall be included in the cost of the work.
3. The cost of elbows, galvanized metals, end section, flowfill and all miscellaneous items required to install outlet piping shall be included in the cost of the work.
4. Plastic pipe shall conform to the requirements of AASHTO M294, type S. Plastic pipe shall be joined by watertight couplings as recommended by the pipe supplier or as approved. All joints shall be mechanically restrained to prevent separation.
5. Concrete (Class D), reinforcement, and anchors will not be measured but will be paid for under Item No. 604, Vane Grate Inlet Special.

| Quantities | | | |
|---|---|---|---|
| | INITIAL | DATE | |
| Quantities By | RD | 06/11 | |
| Checked By | MM/LF | 06/11 | |

| Detail | | | |
|---|---|---|---|
| | INITIAL | DATE | |
| Detailed By | RD | 06/11 | |
| Checked By | MM | 06/11 | |

| Design | | | |
|---|---|---|---|
| | INITIAL | DATE | |
| Designed By | MM | 06/11 | |
| Checked By | LF | 05/11 | |

Plot Time: 11:57:50 AM Path: \\Public\bridge common\0224\16628_Federal_6th\My Project\27Bridge Drain Details.dgn

Print Date: 8/1/2011
File Name: 27Bridge Drain Details.dgn
Horiz. Scale: Varies Vert. Scale: As Noted
Staff Bridge Branch - Unit 0224 AJP

Sheet Revisions

| Date: | Comments | Init. |
|---|---|---|
| | | |
| | | |
| | | |
| | | |

Colorado Department of Transportation
8833 South Wadsworth Court
Littleton, CO 80128
Phone: 303-972-9112 FAX: 303-972-9114
Region 6 TG

As Constructed
No Revisions:
Revised:
Void:

VANE GRATE INLET (SPECIAL)

Designer: M. Mohseni
Detailer: R. Olmos
Sheet Subset: Bridge
Structure Numbers: F-16-XO
Subset Sheets: B27 of 46

Project No./Code
C 088A-024
16628
Sheet Number

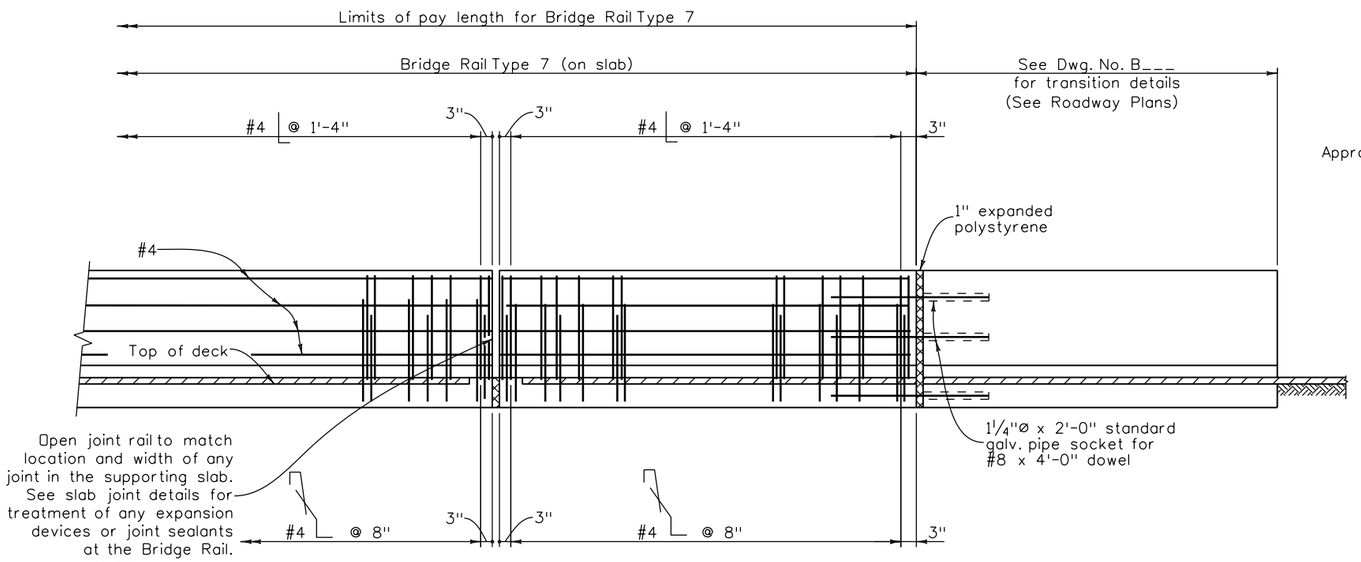


ELEVATION

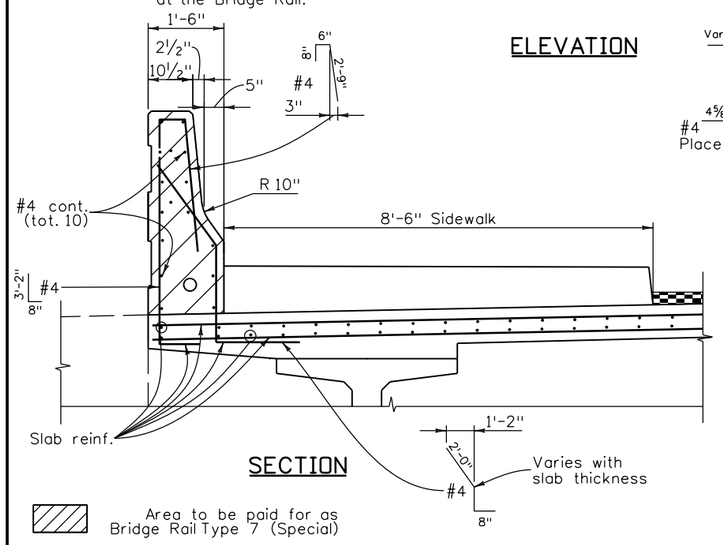


SECTION

Area to be paid for as
Bridge Rail Type 7 (Special)

## INFORMATION ONLY

| Description | Unit | |
|---|---|---|
| | | |
| Concrete Class D | Cu. Yd. | 0.12 |
| | | |
| Reinforcing Steel (Epoxy) | Lb. | 16.2 |
| | | |
| | | |

## TRANSITION TO CONNECT BRIDGE RAIL TYPE 7 TO GUARD RAIL

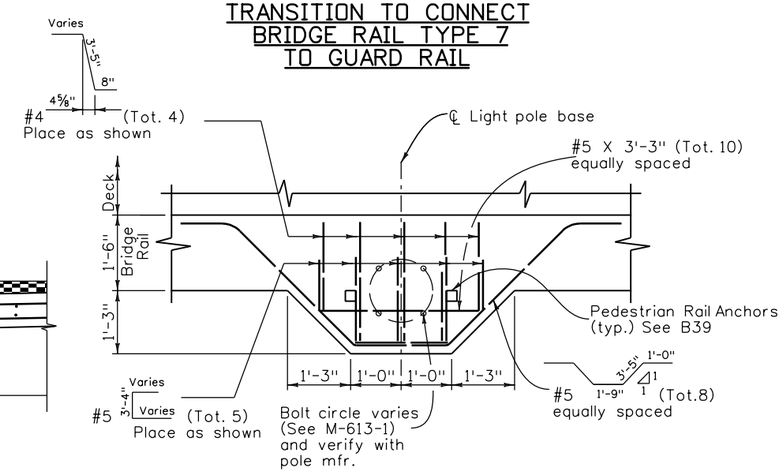


PLAN - LIGHT POLE BASE (B06 / 1)

Rail reinforcing not shown for clarity.
Will be paid for under Item No. 601, Concrete Class D (Bridge) and Item No. 602, Reinforcing Steel (Epoxy Coated).

## DESIGN DATA

Reinforced Concrete:

Class D Concrete: $f'_c$ = 4,500 psi
Reinforcing Steel: $f_y$ = 60,000 psi

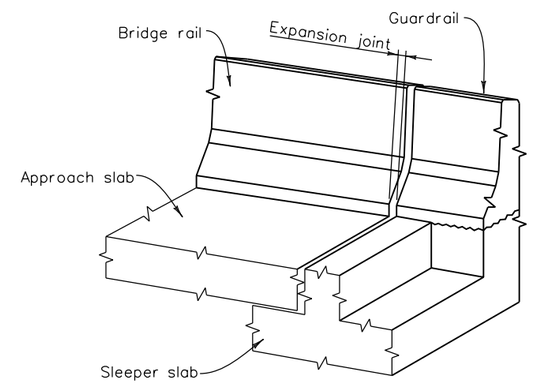


ISOMETRIC VIEW - TYPE 7 RAIL

## NOTES:

Backfill wingwalls and retaining walls before barrier is placed.

All bridge rail concrete shall be Class D.

Longitudinal reinforcement shall stop at all expansion joints.

Bridge rail shall be constructed plumb.

See Std. M-606-1 and M-606-13 for Guard Rail Type 3 details and details of transition.

Concrete and reinforcing steel shall conform to the requirements of Sections 601 and 602. Payment will be made under Item 606, Bridge Rail Type 7 (Special).

The surface of the rail shall be tested with a 10 foot straightedge laid along the surface in the longitudinal direction. Deviation of the concrete surface from the straightedge shall be less than ¼" plus allowance for roadway horizontal and vertical curvature, if any.

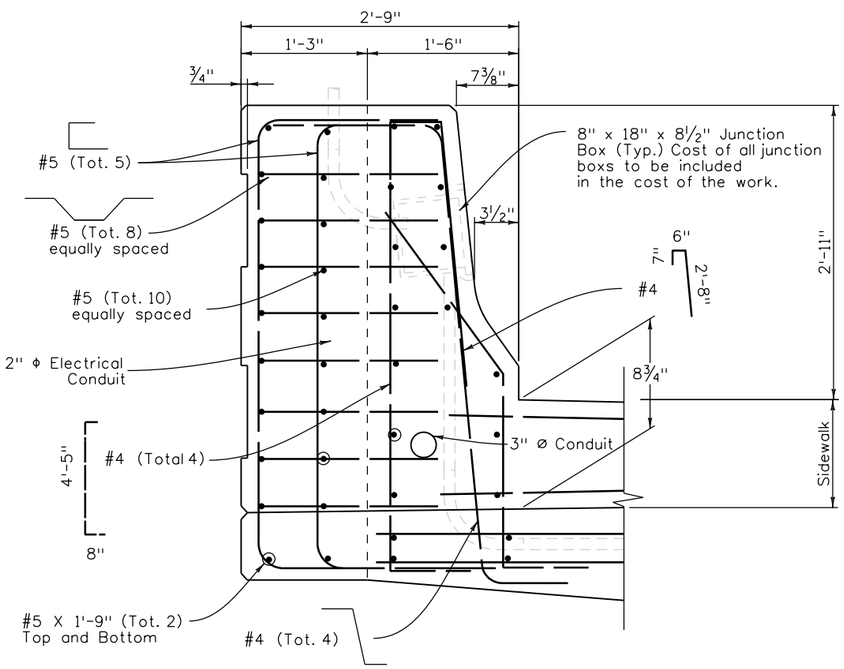


SECTION - LIGHT POLE BASE

| Design | INITIAL | DATE |
|---|---|---|
| Designed By | MM | 06/11 |
| Checked By | LF | 05/11 |

| Detail | INITIAL | DATE |
|---|---|---|
| Detailed By | RD | 06/11 |
| Checked By | MM | 06/11 |

| Quantities | INITIAL | DATE |
|---|---|---|
| Quantities By | RD | 06/11 |
| Checked By | MM/LF | 06/11 |

| | | | | |
|---|---|---|---|---|
| Print Date: 8/1/2011 | Sheet Revisions | | | |
| Drawing File Name: 28heet Br Rail 7 (Special) WSidewalk.dgn | Date: | Comments | Init. | |
| Horiz. Scale: None Vert. Scale: As Noted | | | | |
| Staff Bridge Branch - Unit 0224 AJP | | | | |

Colorado Department of Transportation
8833 South Wadsworth Court
Littleton, CO 80128
Phone: 303-972-9112 FAX: 303-972-9114
Region 6 TG

| As Constructed | | | |
|---|---|---|---|
| No Revisions: | BRIDGE RAIL TYPE 7 (SPECIAL) W/SIDEWALK | | Project No./Code |
| Revised: | Designer: M. Mohseni | Structure Numbers F-16-XD | C 088A-024 |
| Void: | Detailer: R. Olmos | | 16628 |
| | Sheet Subset: Bridge | Subset Sheets: B28 of 46 | Sheet Number |

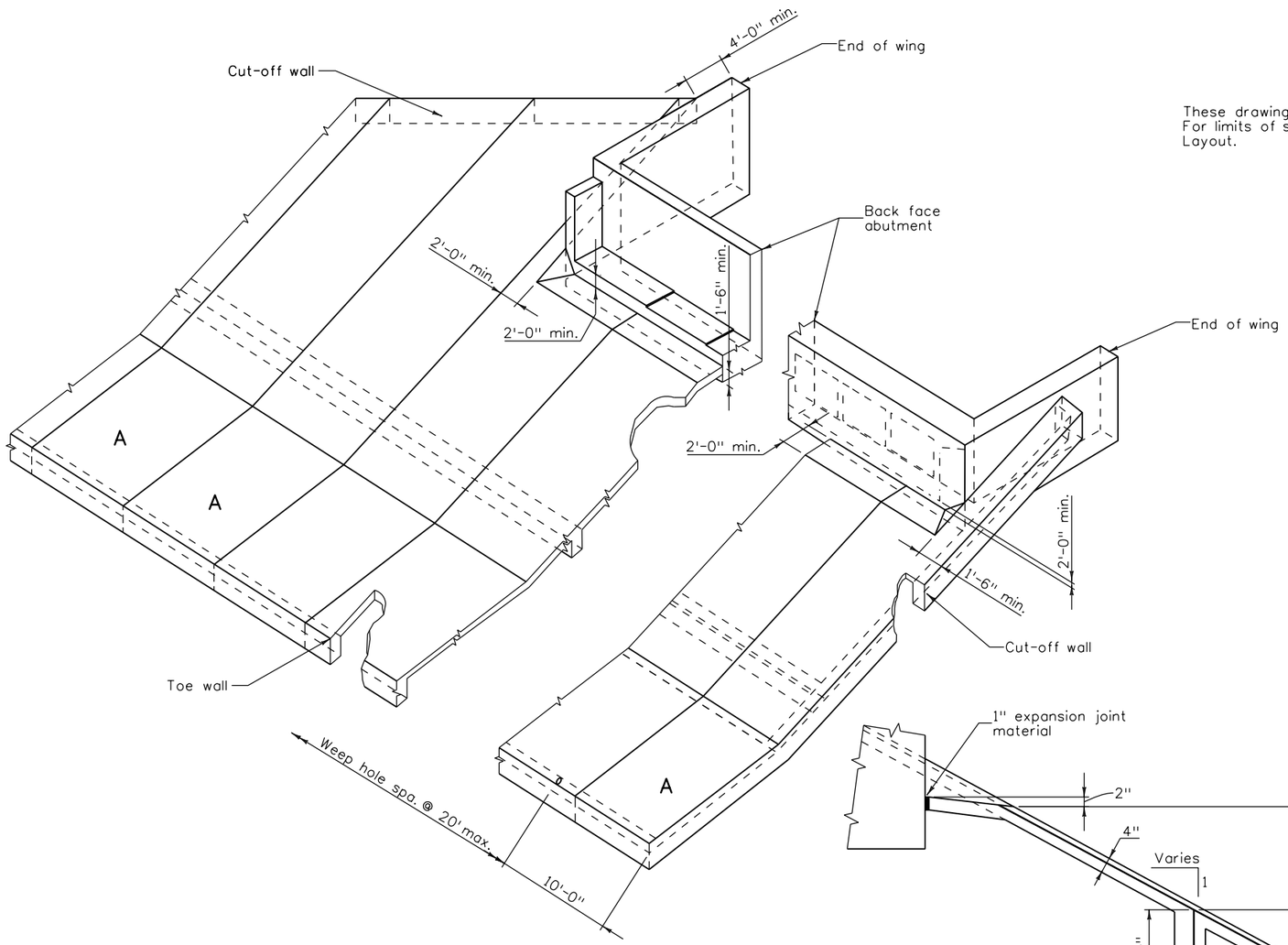


These drawings show general details only. For limits of slope paving see General Layout.

## NOTES:

Slope paving shall be poured in 10 ft. transverse sections with a tooled construction joint at each section.

Wire fabric shall be 2" from the end of joints and shall lap 8" at splices.

Where slope or berm paving butts against structural concrete, separate with 1" expansion joint material.

Expansion joint material and welded wire fabric shall not be paid for separately, but shall be included in the work.

Structure excavation for concrete slope and ditch paving shall be limited to the actual volume occupied by the slope paving concrete.

Panels marked thus, "A", are to receive an exposed aggregate finish. After the concrete is struck to grade, the surface shall be sprayed with an approved retarder. The amount of retarder sprayed on the surface shall be as recommended by the manufacturer.

In all cases, the exposed aggregate finish shall be started on the first panel facing on-coming traffic.

The concrete shall then be allowed to set. After setting the prescribed time, the surface shall be broomed and washed with water to expose the aggregate.

The exposed aggregate finish shall then be sprayed with a clear curing compound. Coarse aggregate used in exposed aggregate panels shall be composed predominately of stone contrasting in color to that of normal concrete in adjacent panels.

Coarse aggregate shall meet the requirements of AASHTO designation M-43, size number 6.

■ 2.5 lbs. of an approved polypropylene fiber, per cubic yard of concrete, may be substituted for the WWF in this slope paving. If this substitution is made, a continuous #5 reinforcing bar shall be added near the top and bottom of the cutoff wall. The fiber shall be added to the concrete mix in such a fashion that the fibers are uniformly dispersed in the concrete without visible balls or clumps in either the finished slope paving or in the plastic concrete delivered from the concrete truck.

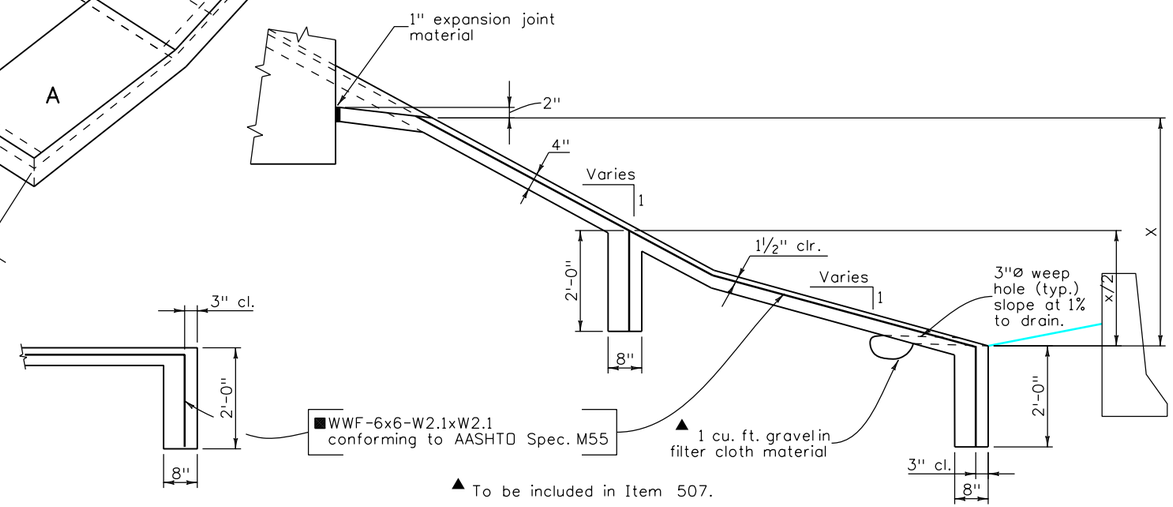


▲ To be included in Item 507.

TYPICAL SECTION THRU CUT-OFF WALL

TYPICAL SECTION THRU SLOPE PAVING

| Design | | | | Detail | | | | Quantities | | | |
|---|---|---|---|---|---|---|---|---|---|---|---|
| | INITIAL | DATE | | | INITIAL | DATE | | | INITIAL | DATE |
| Designed By | MM | 06/11 | Detailed By | RD | 06/11 | Quantities By | RD | 06/11 |
| Checked By | LF | 05/11 | Checked By | MM | 06/11 | Checked By | MM/LF | 06/11 |

| | | | | | |
|---|---|---|---|---|---|
| Print Date: 8/1/2011 | | Sheet Revisions | | | |
| Drawing File Name: 29Sheet SlPvg.dgn | | Date: | Comments | Init. | |
| Horiz. Scale: None | Vert. Scale: As Noted | | | | |
| Unit Information 0224 | AJP | | | | |

Colorado Department of Transportation
8833 South Wadsworth Court
Littleton, CO 80128
Phone: 303-972-9112 FAX: 303-972-9114
Region 6 TG

| As Constructed | | | | |
|---|---|---|---|---|
| No Revisions: | SLOPE PAVING DETAILS | | | Project No./Code |
| Revised: | Designer: M. Mohseni | Structure Numbers | F-16-XO | C 088A-024 |
| | Detailer: R. Olmos | | | 16628 |
| Void: | Sheet Subset: Bridge | Subset Sheets: B29 of 46 | | Sheet Number |

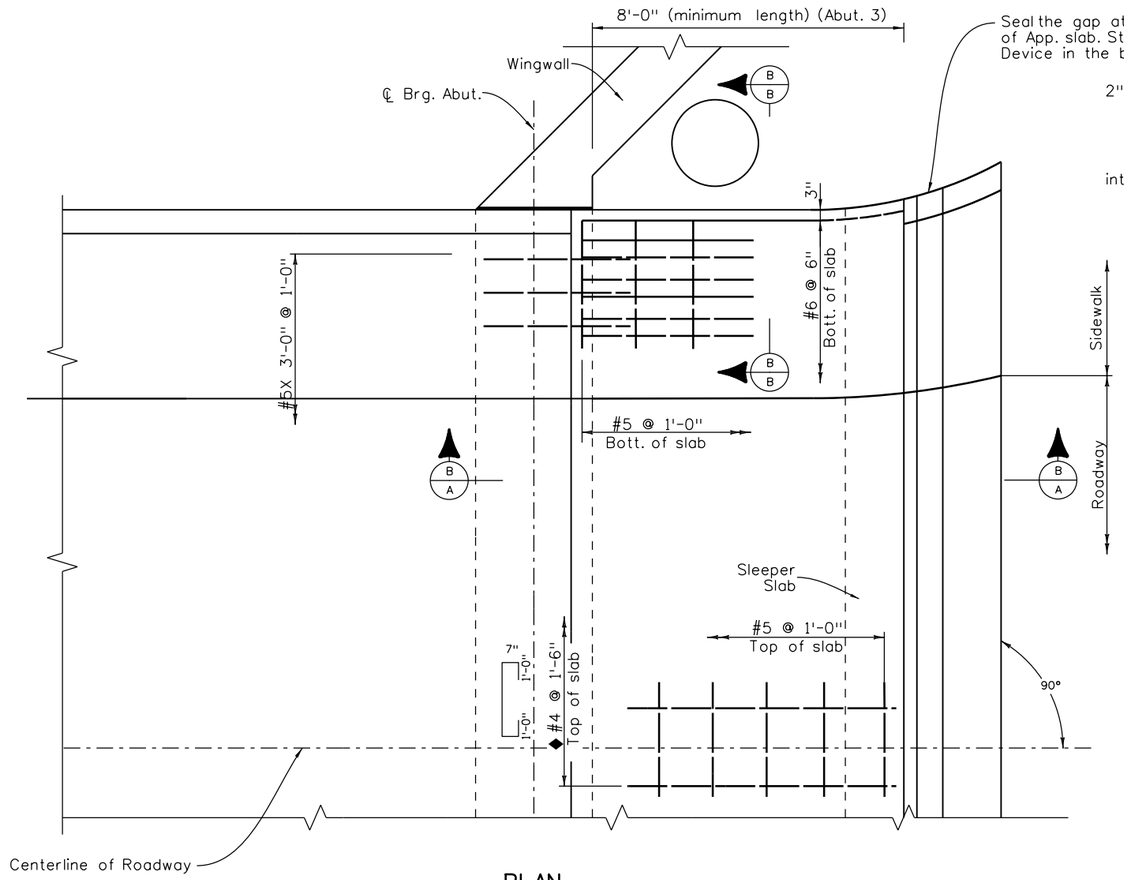


PLAN

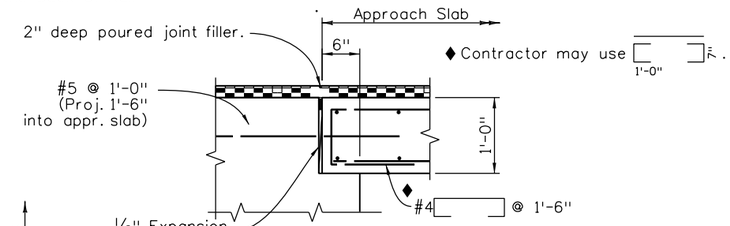


DETAIL "B"

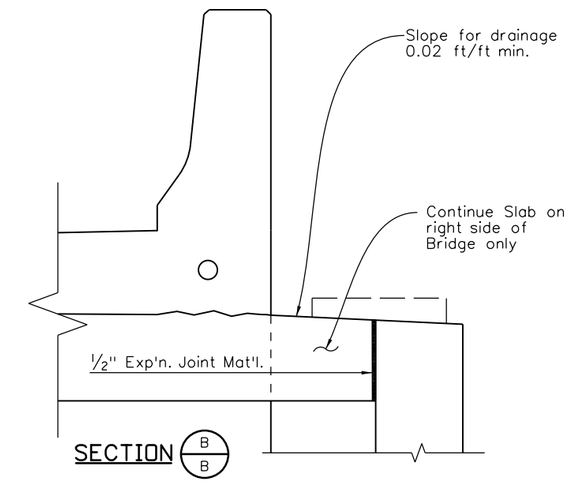


SECTION B/B

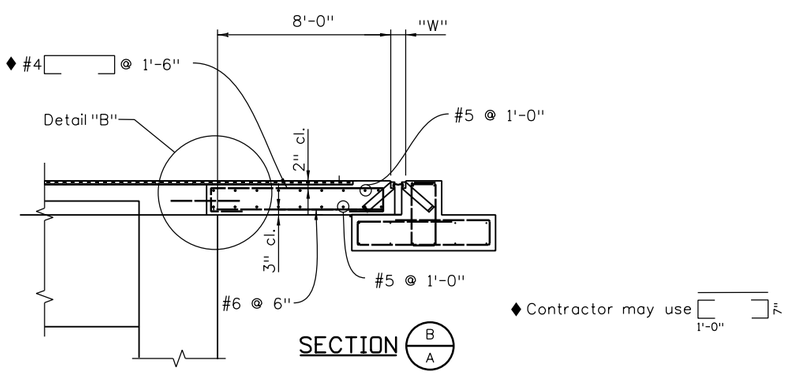


SECTION B/A

With Hot Bituminous Pavement roadway

## NOTES:

Concrete Class D (Bridge) shall be used for approach slabs.

½" expansion joint material shall meet AASHTO Spec. M213.

For expansion device details see Dwg. No. B29, 30.

For Vane Grate Inlet (Special) see Dwg. No. B27.

Approach slab concrete shall be cured in accordance with the Specifications for Bridge Deck Concrete in Subsection 601.

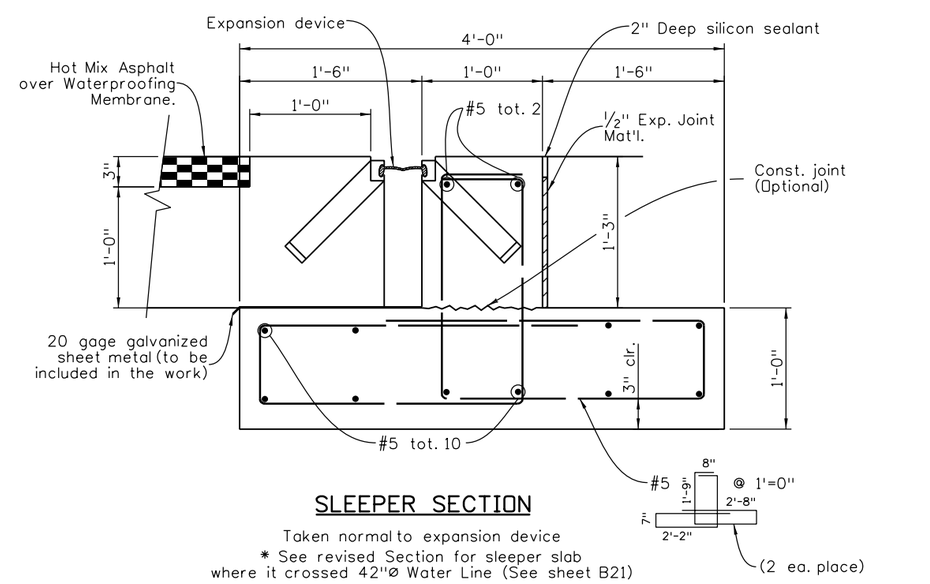


SLEEPER SECTION

Taken normal to expansion device

* See revised Section for sleeper slab where it crossed 42"Ø Water Line (See sheet B21)

| Design | | | Detail | | | Quantities | | |
|---|---|---|---|---|---|---|---|---|
| | INITIAL | DATE | | INITIAL | DATE | | INITIAL | DATE |
| Designed By | MM | 06/11 | Detailed By | RD | 06/11 | Quantities By | RD | 06/11 |
| Checked By | LF | 05/11 | Checked By | MM | 06/11 | Checked By | MM/LF | 06/11 |

| | | | |
|---|---|---|---|
| Print Date: 8/1/2011 | Sheet Revisions | Colorado Department of Transportation | As Constructed |
| Drawing File Name: 30Sheet App Slab (North).dgn | Date: / Comments / Init. | 8833 South Wadsworth Court<br>Littleton, CO 80128<br>Phone: 303-972-9112 FAX: 303-972-9114 | No Revisions: |
| Horiz. Scale: None Vert. Scale: As Noted | | Region 6 TG | Revised: |
| Staff Bridge Branch - Unit 0224 AJP | | | Void: |

| APPROACH SLAB DETAILS NORTH | | | Project No./Code |
|---|---|---|---|
| Designer: M. Mohseni | Structure Numbers | F-16-XO | C 088A-024 |
| Detailer: R. Olmos | | | 16628 |
| Sheet Subset: Bridge | Subset Sheets: B30 of 46 | | Sheet Number |

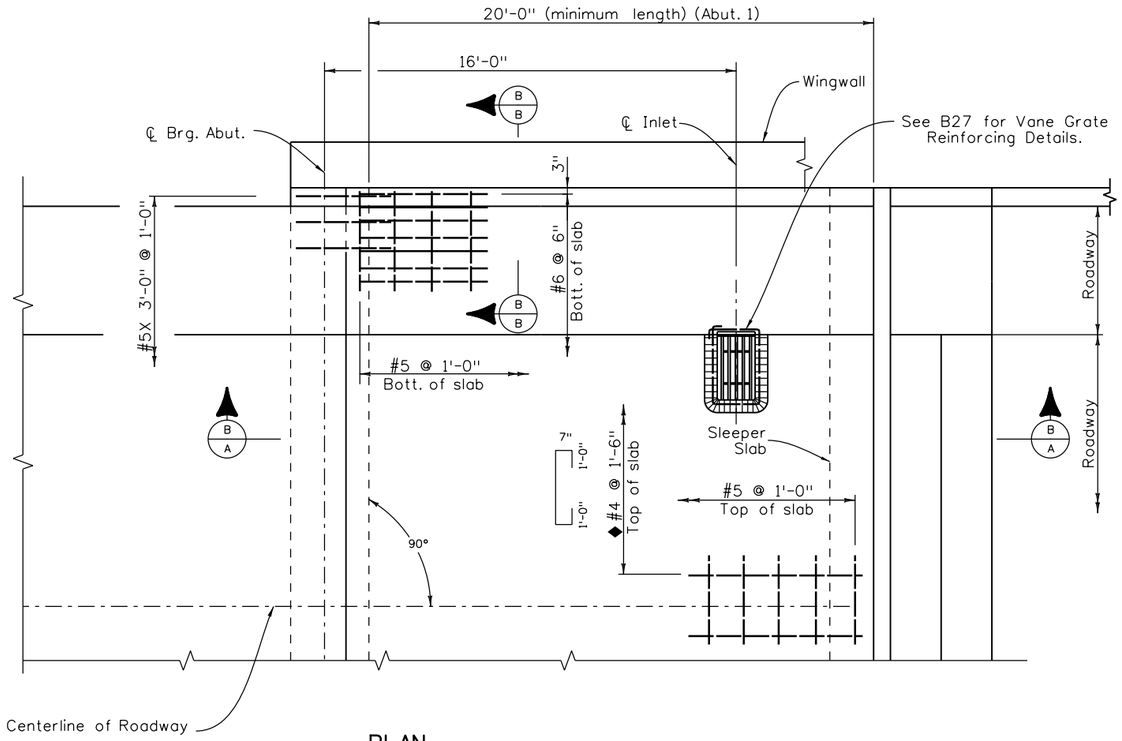


PLAN

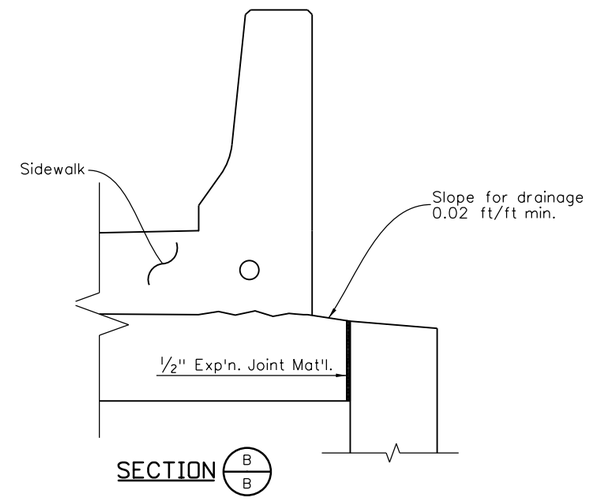


SECTION B/B

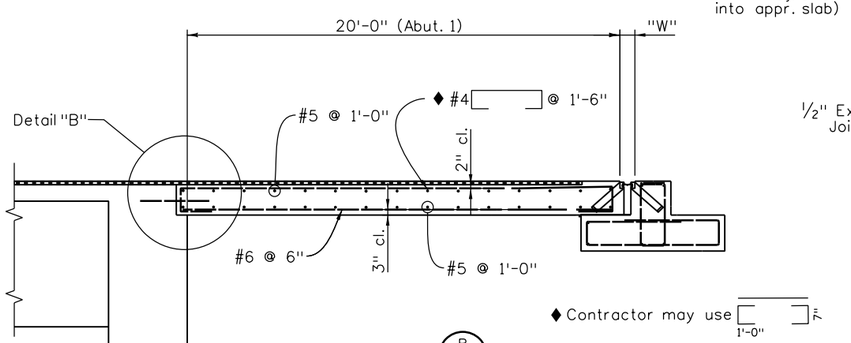


SECTION B/A

With Hot Bituminous Pavement roadway

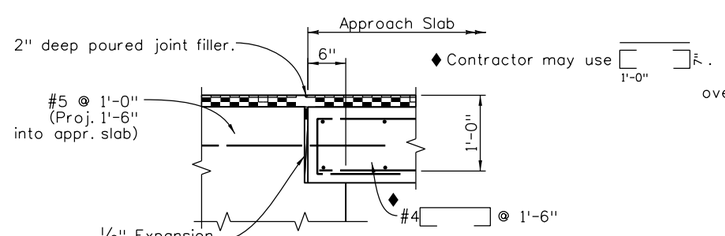


DETAIL "B"

## NOTES:

Concrete Class D (Bridge) shall be used for approach slabs.

1/2" expansion joint material shall meet AASHTO Spec. M213.

For expansion device details see Dwg. No. B32, 33.

For Vane Grate Inlet (Special) see Dwg. No. B27.

Approach slab concrete shall be cured in accordance with the Specifications for Bridge Deck Concrete in Subsection 601.

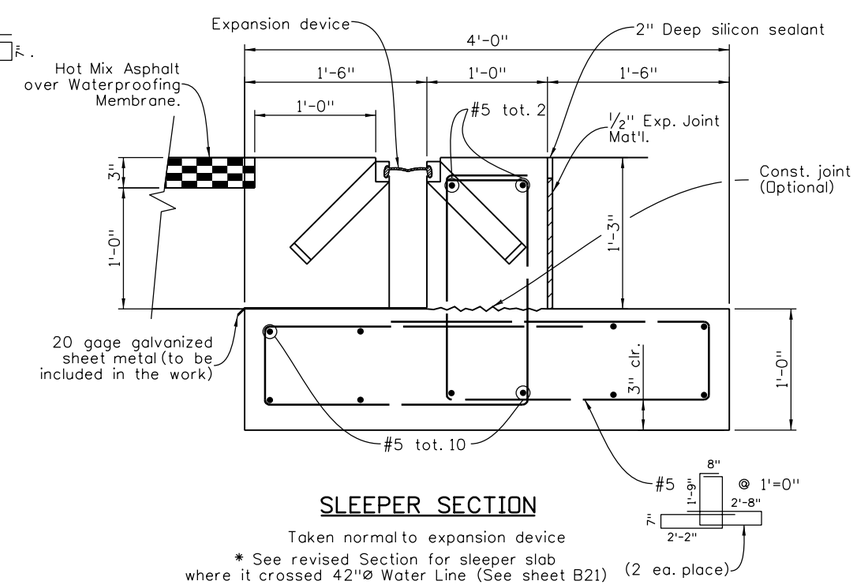


SLEEPER SECTION

Taken normal to expansion device

* See revised Section for sleeper slab where it crossed 42"Ø Water Line (See sheet B21)

| Design | | | Detail | | | Quantities | | |
|---|---|---|---|---|---|---|---|---|
| | INITIAL | DATE | | INITIAL | DATE | | INITIAL | DATE |
| Designed By | MM | 06/11 | Detailed By | RD | 06/11 | Quantities By | RD | 06/11 |
| Checked By | LF | 05/11 | Checked By | MM | 06/11 | Checked By | MM/LF | 06/11 |

Print Date: 8/1/2011
Drawing File Name: 31Sheet App Slab (South).dgn
Horiz. Scale: None Vert. Scale: As Noted
Staff Bridge Branch - Unit 0224 AJP

| Sheet Revisions | | |
|---|---|---|
| Date: | Comments | Init. |
| | | |
| | | |
| | | |
| | | |

Colorado Department of Transportation
DOT DEPARTMENT OF TRANSPORTATION
8833 South Wadsworth Court
Littleton, CO 80128
Phone: 303-972-9112 FAX: 303-972-9114
Region 6 TG

As Constructed
No Revisions:
Revised:
Void:

APPROACH SLAB DETAILS SOUTH

| | | | |
|---|---|---|---|
| Designer: | M. Mohseni | Structure Numbers | F-16-XO |
| Detailer: | R. Olmos | | |
| Sheet Subset: | Bridge | Subset Sheets: | B31 of 46 |

Project No./Code
C 088A-024
16628
Sheet Number

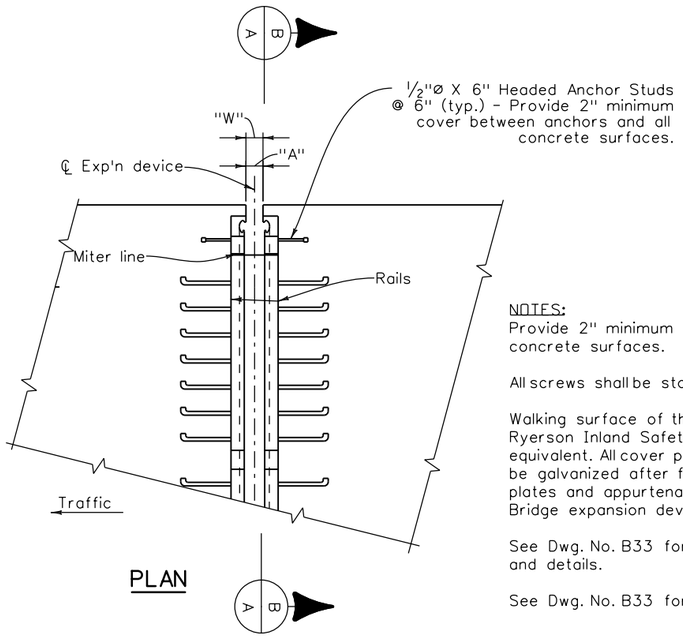


PLAN

NOTES:
Provide 2" minimum cover between anchors and all concrete surfaces.

All screws shall be stainless steel.

Walking surface of the Sidewalk Cover Plate shall be Ryerson Inland Safety Plate or Engineer approved equivalent. All cover plates and concrete inserts shall be galvanized after fabrication. The cost of the cover plates and appurtenances shall be included in item 518, Bridge expansion device (0-4 inch).

See Dwg. No. B33 for expansion device notes and details.

See Dwg. No. B33 for "A" dimension.

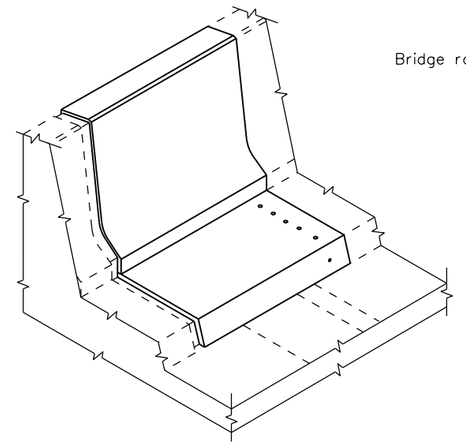

ISOMETRIC VIEW

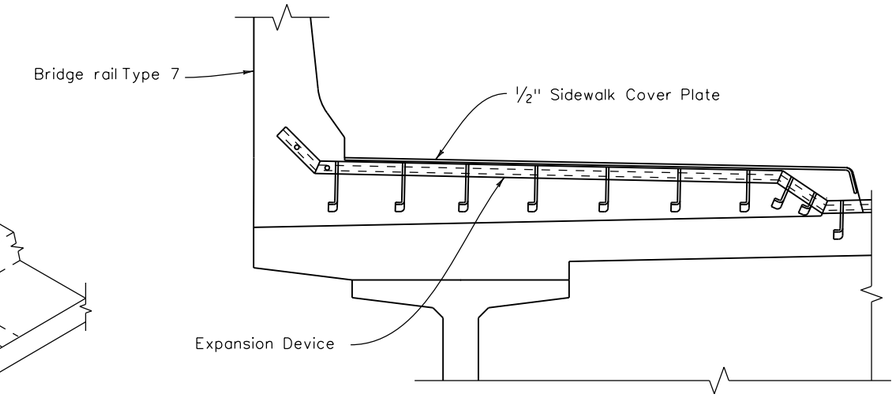


SECTION B/A

# TYPE 7 RAIL DETAILS

With Sidewalk and cover plate

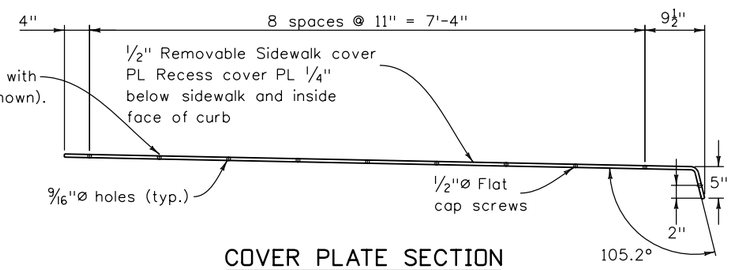


COVER PLATE SECTION

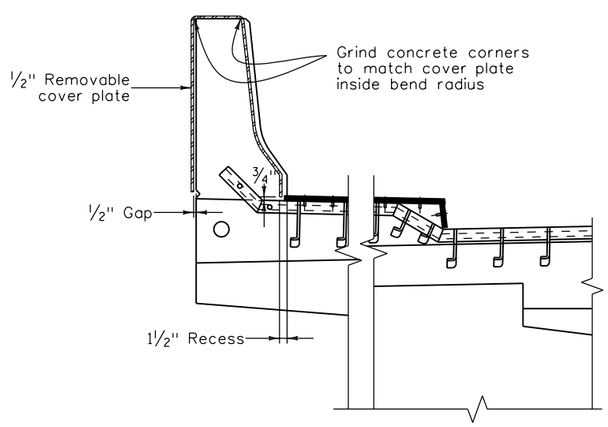


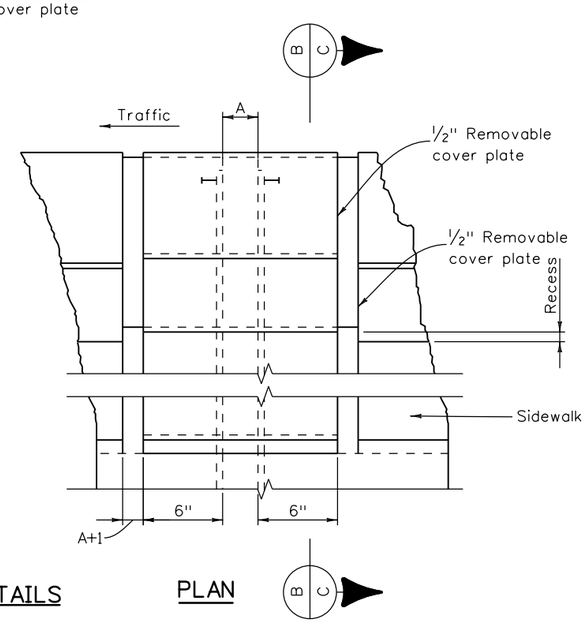


PLAN

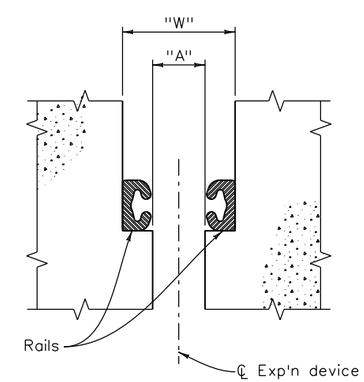


SECTION B/B

# TYPE 7 COVER PLATE DETAILS

(Galvanize after fabrication)

| Design | | | | Detail | | | | Quantities | | | |
|---|---|---|---|---|---|---|---|---|---|---|---|
| | INITIAL | DATE | | INITIAL | DATE | | INITIAL | DATE | | INITIAL | DATE |
| Designed By | MM | 06/11 | Detailed By | RO | 06/11 | Quantities By | RO | 06/11 | | | |
| Checked By | LF | 05/11 | Checked By | MM | 06/11 | Checked By | MM/LF | 06/11 | | | |

| | | | | | |
|---|---|---|---|---|---|
| Print Date: 8/1/2011 | | Sheet Revisions | | | |
| Drawing File Name: 32Bridge Exp. Dev. (0-4 Inch) w. sidewalk and cover plate.dgn | | Date: | Comments | Init. | |
| Horiz. Scale: None | Vert. Scale: As Noted | | | | |
| Unit Information 0224 | AJP | | | | |

Colorado Department of Transportation
8833 South Wadsworth Court
Littleton, CO 80128
Phone: 303-972-9112 FAX: 303-972-9114
Region 6 TG

As Constructed
No Revisions:
Revised:
Void:

BRIDGE EXP. DEVICE (0-4 INCH) W/ SIDEWALK AND COVER PLATE

| | | | |
|---|---|---|---|
| Designer: | M. Mohseni | Structure Numbers | F-16-XO |
| Detailer: | R. Olmos | | |
| Sheet Subset: | Bridge | Subset Sheets: | B32 of 46 |

Project No./Code
C 088A-024
16628
Sheet Number

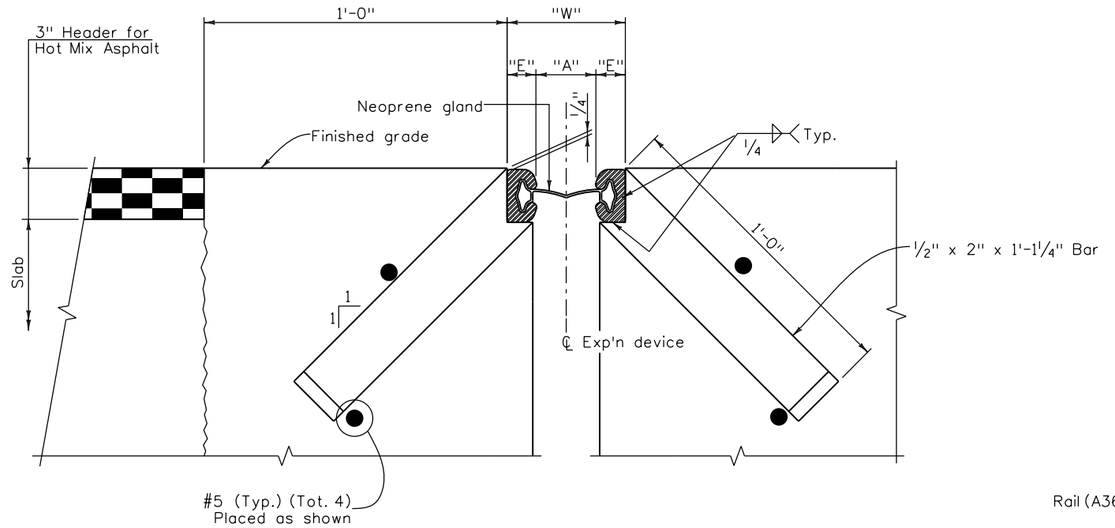


## SECTION THRU STRIP SEAL BRIDGE EXPANSION DEVICE

Section taken perpendicular to ℄ exp'n device

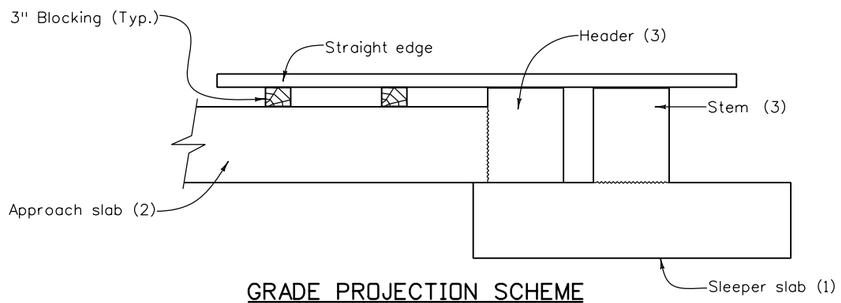


## GRADE PROJECTION SCHEME

(Numbers in parenthesis refer to first, second and third concrete pours)

| STR. TEMP | Span 1 "A" | Span 1 "W"* | Span 2 "A" | Span 2 "W"* |
|---|---|---|---|---|
| -30° F | 2 5/8" | 5 1/8" | 3" | 5 1/2" |
| 0° F | 2 7/16" | 4 15/16" | 2 3/4" | 5 1/4" |
| 30° F | 2 3/16" | 4 11/16" | 2 7/16" | 4 15/16" |
| 60° F | 11 5/16" | 4 7/16" | 2 1/8" | 4 5/8" |
| 90° F | 1 3/4" | 4 1/4" | 1 13/16" | 4 5/16" |
| 120° F | 1 1/2" | 4" | 1 1/2" | 4" |

*For E = 1 1/4" (Min.)

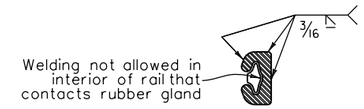


## RAIL FIELD SPLICE DETAIL

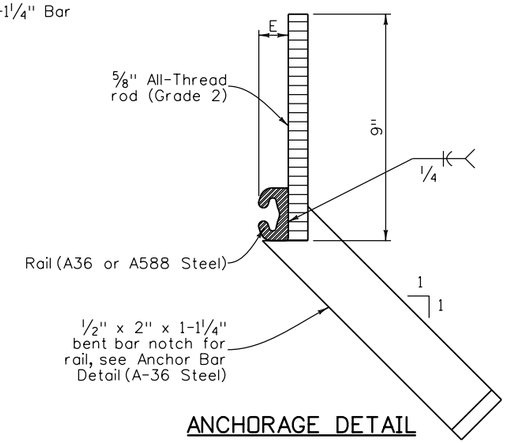


## ANCHORAGE DETAIL

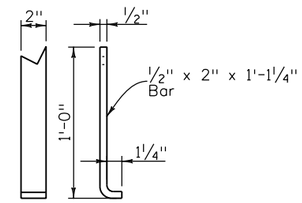


## TYPICAL ANCHOR BAR DETAIL

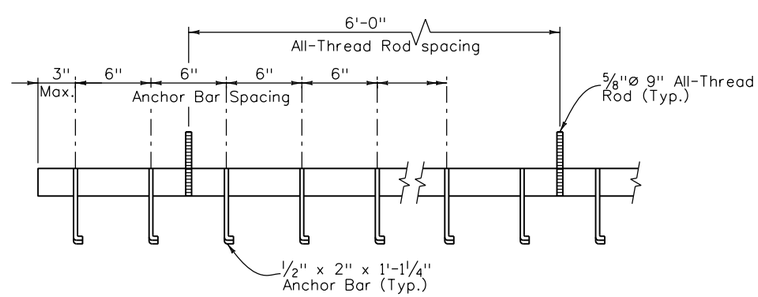


## ANCHOR BAR SPACING

## NOTES:

The expansion device shall be installed on grade, parallel to the slope and grade of the deck.

After the concrete has attained initial set, the attachments used to hold the expansion device assembly in it's proper position shall be removed.

Do not paint steel surfaces in contact with either concrete or seal.

"W" and "E" dimensions are dependent upon the particular expansion device supplied, and shall be shown on the working drawings.

See table for dimensions "A" and "W"; interpolate as needed. Do not install the gland until dimension "A" has opened up to at least 1 1/2". Use section 518.10(b) in the standard specifications to determine the structure temperature.

The neoprene gland shall be installed in one piece in accordance with section 518 of the standard specifications.

See section 518 in the standard specifications for water tight integrity testing requirements.

Set elevations at top of header and sleeper stem with the grade projection scheme.

## ACCEPTABLE EXPANSION DEVICE ALTERNATES

D.S. Brown A2R400-SSA2
WABO SE400 Type A
E-poxy Engineered Materials S400-A Strip Seal

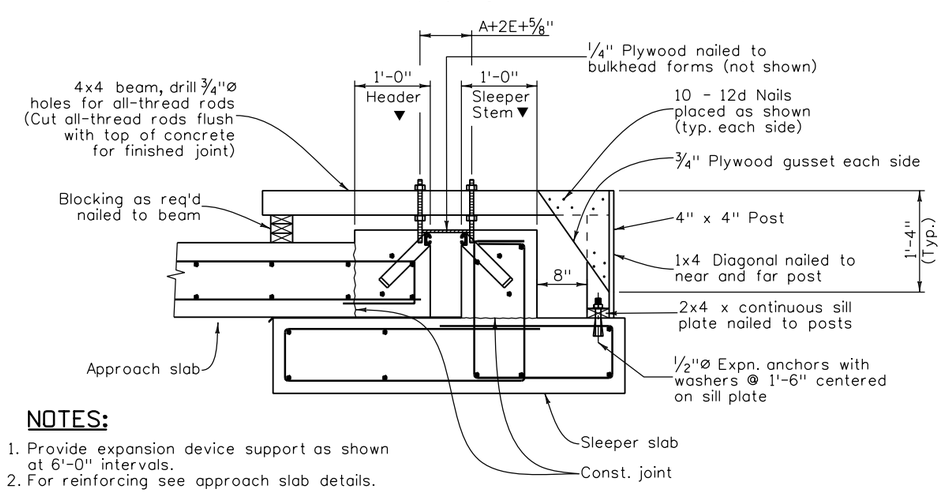


## NOTES:

1. Provide expansion device support as shown at 6'-0" intervals.
2. For reinforcing see approach slab details.

▼ Concrete shall be placed after expansion device has been adjusted to proper grade and approved by the engineer using the Grade Projection Scheme.

## MINIMUM SUPPORT BRACKET REQUIREMENTS

| Quantities | INITIAL | DATE |
|---|---|---|
| Quantities By | RG | 06/11 |
| Checked By | MM/LF | 06/11 |

| Detail | INITIAL | DATE |
|---|---|---|
| Detailed By | RG | 06/11 |
| Checked By | MM | 06/11 |

| Design | INITIAL | DATE |
|---|---|---|
| Designed By | MM | 06/11 |
| Checked By | LF | 05/11 |

Print Date: 8/1/2011
Drawing File Name: 33Sheet Exp.Dev. (0-4 Inch).dgn
Horiz. Scale: None Vert. Scale: As Noted
Unit Information 0224 AJP

| Sheet Revisions | | |
|---|---|---|
| Date: | Comments | Init. |
| | | |
| | | |
| | | |
| | | |


Colorado Department of Transportation
8833 South Wadsworth Court
Littleton, CO 80128
Phone: 303-972-9112 FAX: 303-972-9114
Region 6 TG


As Constructed
No Revisions:
Revised:
Void:

BRIDGE EXPANSION DEVICE
(0 - 4 INCH)

Designer: M. Mohseni
Detailer: R. Olmos
Sheet Subset: Bridge
Structure Numbers: F-16-XO
Subset Sheets: B33 of 46

Project No./Code
C 088A-024
16628
Sheet Number

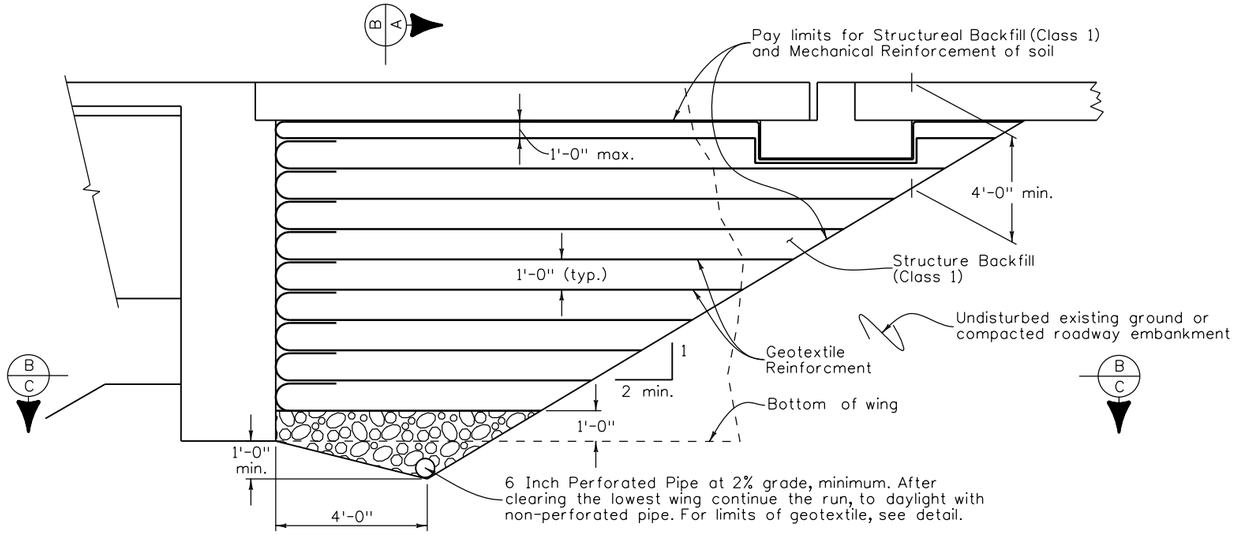


SECTION PERPENDICULAR TO ABUTMENT

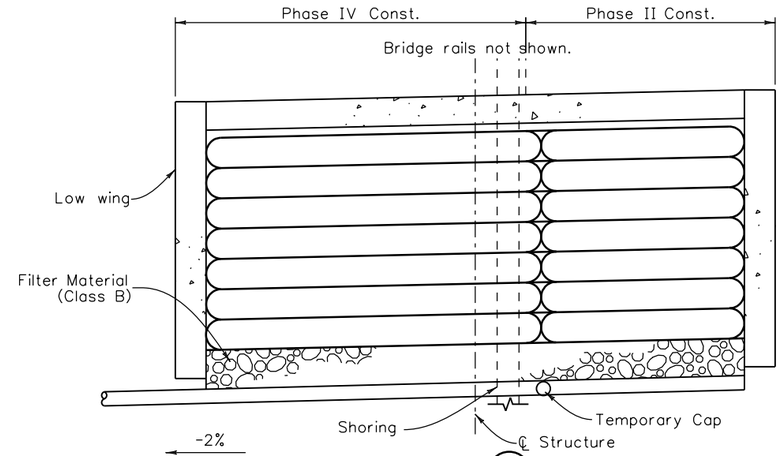


SECTION B/A

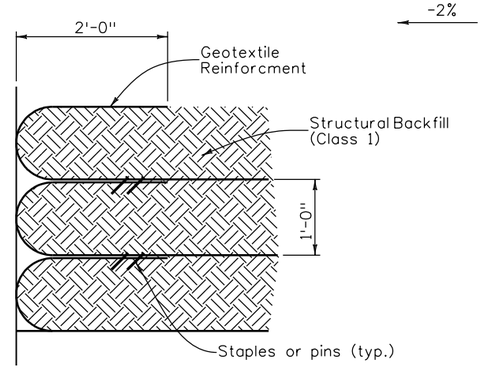


WRAP DETAIL

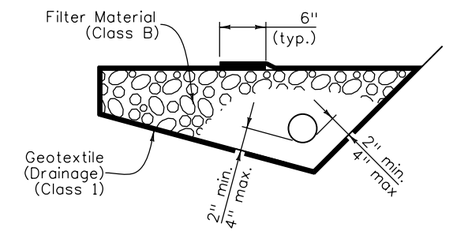


6 INCH PERFORATED PIPE UNDERDRAIN

6 Inch Perforated Pipe Underdrain includes all Filter Material (Class B) and Geotextile (Drainage) (Class 1) surrounding the filter Material (Class B).

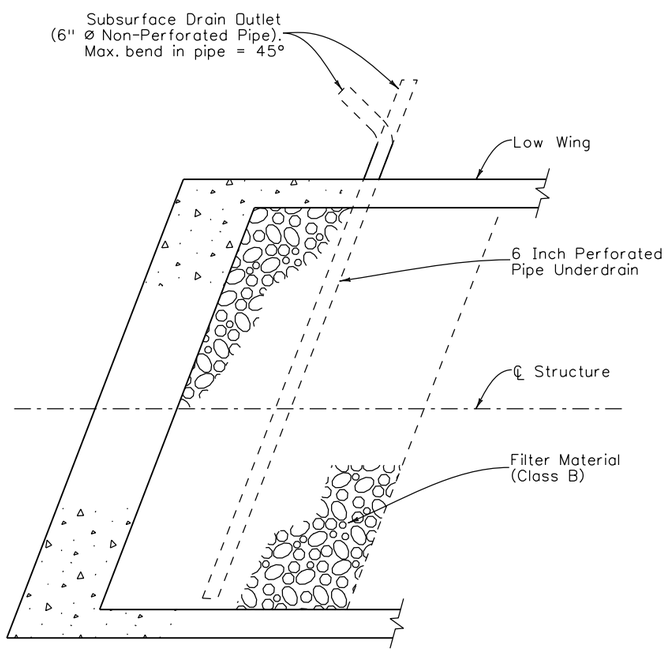


SECTION B/C

## NOTES:

Geotextile reinforcement shall be woven fabric with a Minimum Average Roll Value of 4800 lb/ft for installations with a gap and 2400 lb/ft for installations without a gap based on ASTM D4595.

Geotextile Reinforcement shall be placed by alternating Machine Direction (MD) with Cross Machine Direction (XD) from layer to layer.

The Geotextile Reinforcement wrap at Back Face of Abutment shall Be pulled back slack free with its end anchored to soil underneath with staples or pins.

Minimum splice of all Geofabric shall consist of 6" of overlap.

Payment will be made under item 206 Mechanical Reinforcement of Soil (cu.yd.) and item 206 Structure Backfill (Class 1) (cu.yd.) and Shall include the cost for 6 inch Perforated Pipe underdrain and Subsurface Drain Outlet (6"ø Non-Perforated Pipe).

Installation of Pipe Underdrain and Subsurface Drain Outlet will conform to the Construction requirements of section 605.03 and 605.06, respectively.

| Design | | | Detail | | | Quantities | | |
|---|---|---|---|---|---|---|---|---|
| | INITIAL | DATE | | INITIAL | DATE | | INITIAL | DATE |
| Designed By | MM | 06/11 | Detailed By | RD | 06/11 | Quantities By | RD | 06/11 |
| Checked By | LF | 05/11 | Checked By | MM | 06/11 | Checked By | MM/LF | 06/11 |

Print Date: 8/1/2011
Drawing File Name: 34 Mech Stab Bkfill.dgn
Horiz. Scale: None Vert. Scale: As Noted
Unit Information 0224 AJP

| Sheet Revisions | | |
|---|---|---|
| Date: | Comments | Init. |
| | | |
| | | |
| | | |
| | | |

Colorado Department of Transportation
8833 South Wadsworth Court
Littleton, CO 80128
Phone: 303-972-9112 FAX: 303-972-9114
Region 6 TG

As Constructed
No Revisions:
Revised:
Void:

MECHANICALLY STABILIZED BACKFILL

Designer: M. Mohseni
Detailer: R. Olmos
Sheet Subset: Bridge
Structure Numbers: F-16-XD
Subset Sheets: B34 of 46

Project No./Code
C 088A-024
16628
Sheet Number

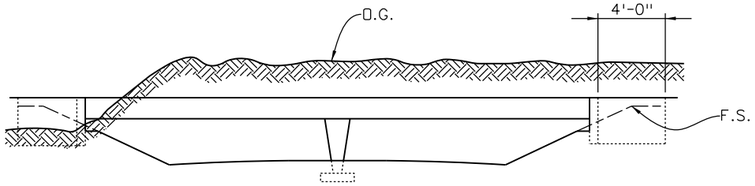


ELEVATION

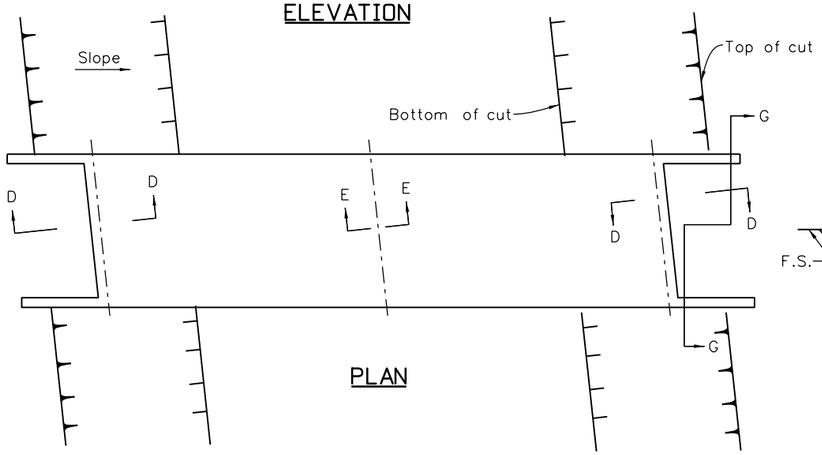


PLAN

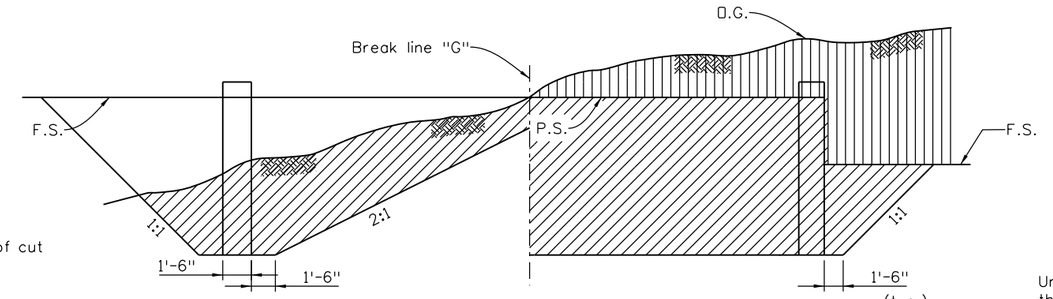


NEAR END OF WINGWALL

NEAR B.F. OF ABUTMENT

SECTION G-G (EXCAVATION)

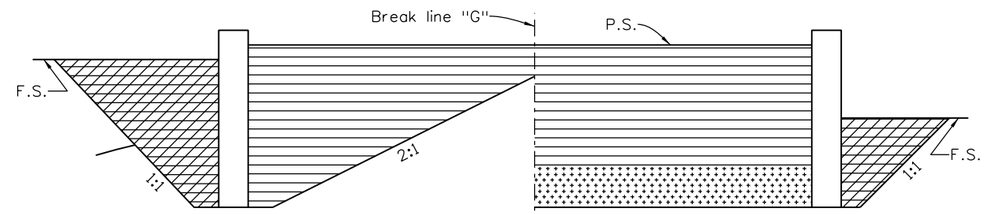


★ NEAR END OF WINGWALL

NEAR B.F. OF ABUTMENT

SECTION G-G (BACKFILL)

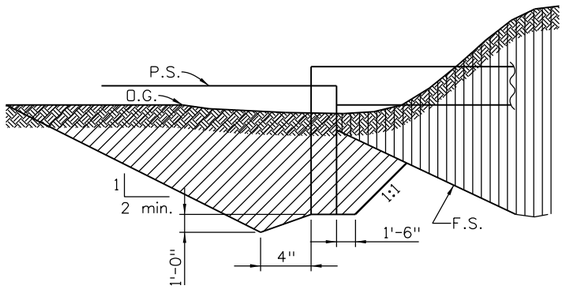


SECTION D-D (EXCAVATION)

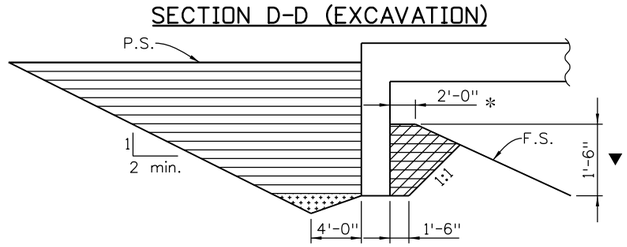


SECTION D-D (BACKFILL)

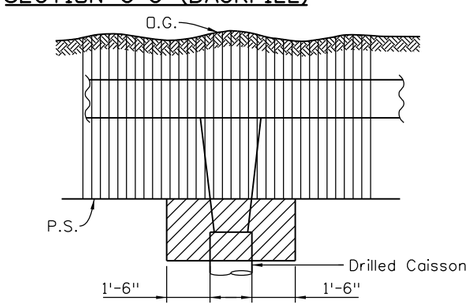


SECTION E-E (EXCAVATION)

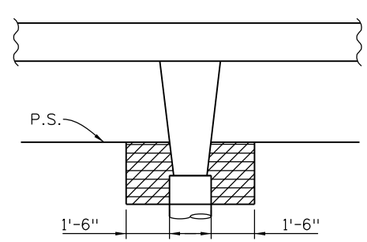


SECTION E-E (BACKFILL)

## GENERAL NOTES

Unless shown otherwise in the plans, this drawing gives the minimum extent of Structure Excavation and Structure Backfill. The Contractor may elect to extend the Structure Excavation and Structure Backfill beyond the limits shown here. Any additional Excavation or Backfill beyond these limits will not be measured nor paid for.

Structure footings which are located in rock shall be poured out to undisturbed rock, without forming, in conformance with 601.09.

Structure Excavation for Slope Paving not shown.

★ For purposes of quantity calculations this template applies out to end of wingwall.

## LEGEND

- Roadway Excavation
- Structure Excavation
- Structure Backfill (Flow-Fill), or Structure Backfill (Class 1) with Mechanical Reinforcement of Soil, as shown elsewhere in the plans.
- Structure Backfill (Class 2)
- Filter Material

## ABBREVIATIONS

| | |
|---|---|
| O.G. | Original Ground |
| P.S. | Plan Subgrade |
| F.S. | Plan Finished Surface |

* = Minimum berm dimension.
▼ = Minimum embedment, of abut., in Structure Backfill.

| Design | INITIAL | DATE |
|---|---|---|
| Designed By | MM | 06/11 |
| Checked By | LF | 05/11 |

| Detail | INITIAL | DATE |
|---|---|---|
| Detailed By | RD | 06/11 |
| Checked By | MM | 06/11 |

| Quantities | INITIAL | DATE |
|---|---|---|
| Quantities By | RD | 06/11 |
| Checked By | MM/LF | 06/11 |

Print Date: 8/1/2011
Drawing File Name: 35Exc. and Bkfill for Bridge in Cut.dgn
Horiz. Scale: None Vert. Scale: As Noted
Unit Information 0224 AJP

| Sheet Revisions | | |
|---|---|---|
| Date: | Comments | Init. |
| | | |
| | | |
| | | |
| | | |

Colorado Department of Transportation
DOT DEPARTMENT OF TRANSPORTATION
8833 South Wadsworth Court
Littleton, CO 80128
Phone: 303-972-9112 FAX: 303-972-9114
Region 6 TG

As Constructed
No Revisions:
Revised:
Void:

EXC. AND BACKFILL FOR BRIDGE IN CUT

| | | | |
|---|---|---|---|
| Designer: | M. Mohseni | Structure Numbers | F-16-XO |
| Detailer: | R. Olmos | | |
| Sheet Subset: | Bridge | Subset Sheets: | B35 of 46 |

| Project No./Code |
|---|
| C 088A-024 |
| 16628 |
| Sheet Number |

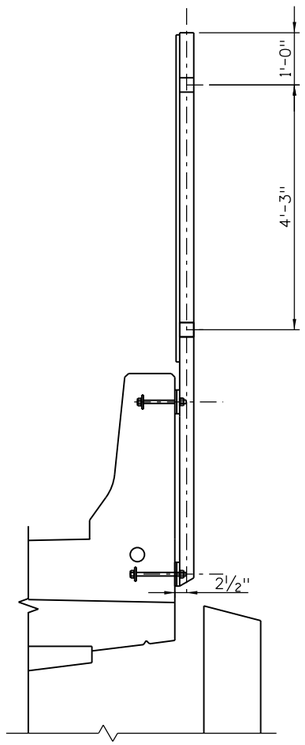


CORNER PANEL

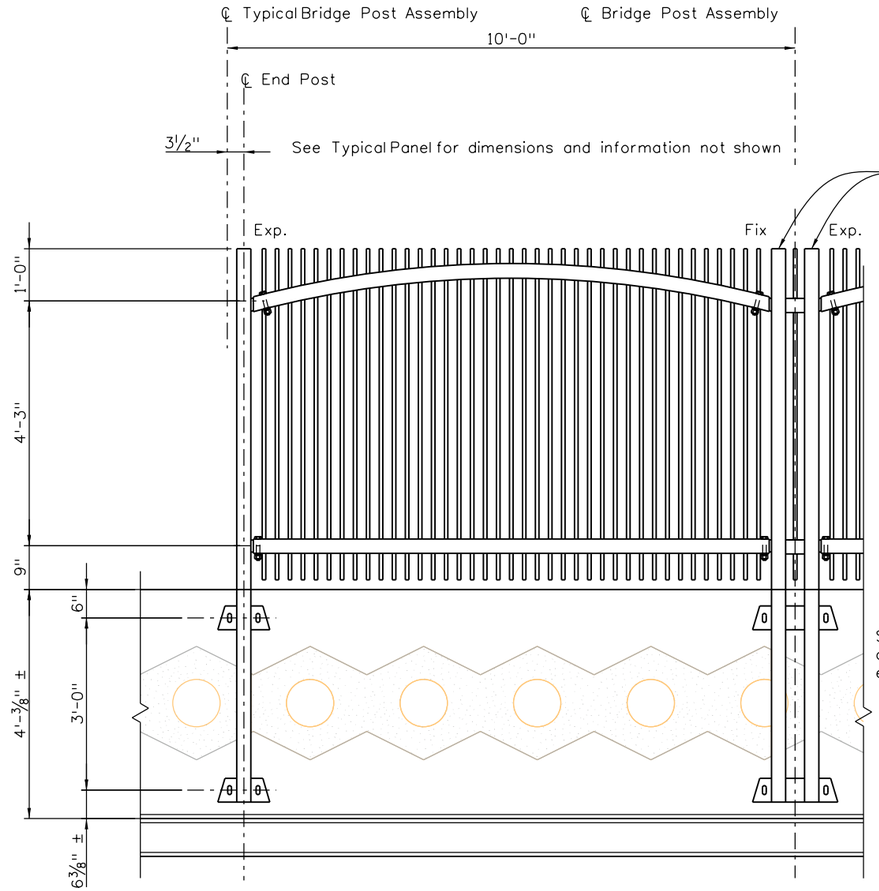


END PANEL

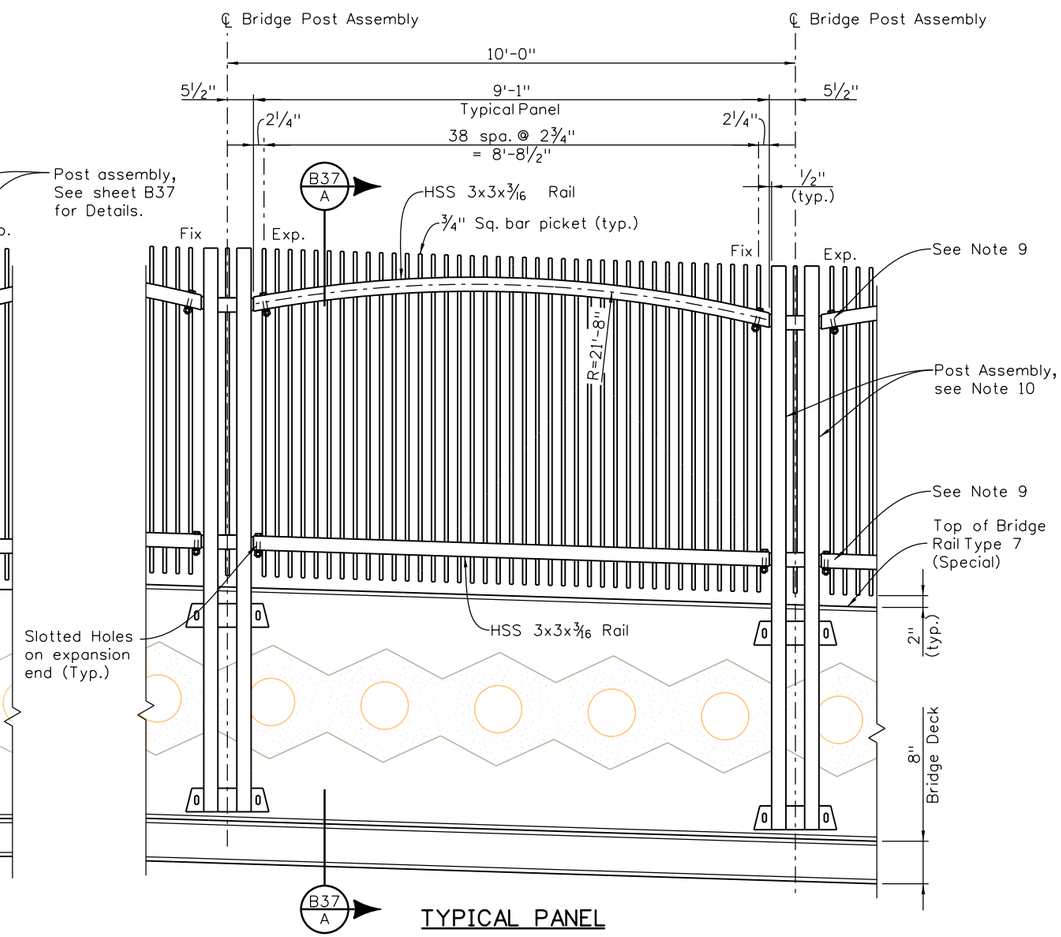


TYPICAL PANEL

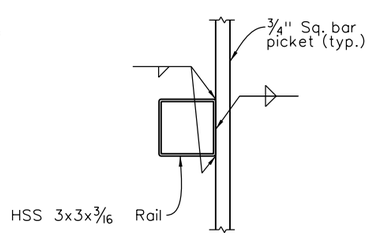


RAIL/PICKET DETAIL

(Weld shall be continuous to seal out moisture)

## PEDESTRIAN RAILING ELEVATIONS

Notes:

1. Payment for pedestrian panels (including attachment & spacer plates, anchor bolts, bolts, nuts, & washers) shall be made under Item 514 - Pedestrian Railing (Steel) (Special).
2. Structural tubing shall conform to ASTM A-500, Grade B.
3. All other structural steel shall conform to AASHTO M-270 (ASTM A-709) Grade 36.
4. All bolts shall be ¾"Ø and conform to ASTM A-325.
5. Prior to fabrication, Shop Drawings shall be submitted to the Engineer for review in accordance with CDOT Specifications, Section 105.
6. Railing panels, post assemblies & all connection & spacer plates shall be powder coated after fabrication by the Manufacturer. Matching field touch-up paint shall be supplied by the powder coating applicator. The Color shall be equivalent to Federal Color No. 20227 (Beige).
7. The cost of powder coating and field touch-up painting will not be paid for separately, but shall be included in the cost of Item 514 - Pedestrian Railing (Steel)(Special).
8. Field sample of the powder coated Pedestrian Railing shall be provided for review and Engineer approval prior to performing the work. A full panel section should be painted. The cost of the powder coated sample will not be paid for separately, but shall be incuded in the work.
9. At fixed connection: provide 15/16"Ø hole in HSS 3x3. At expansion connection: provide 15/16X1¾" slotted hole in HSS 3x3. See details B38/4 & B38/5
10. Post assemblies shall be erected plumb (vertical), see Sht. B38.
11. Railing panels shall be fabricated to follow the slope of the top of the concrete Bridge Rail, as shown on the railing panel elevations above. See Bridge Plans for deck/rail geometry and elevations.

| | | | | | |
|---|---|---|---|---|---|
| Print Date: 8/1/2011 | Sheet Revisions | | | Colorado Department of Transportation | As Constructed |
| Drawing File Name: 36-37-38Pedestrian Fence.dgn | Date: | Comments | Init. | 8833 South Wadsworth Court<br>Littleton, CO 80128<br>Phone: 303-972-9112 FAX: 303-972-9114 | No Revisions: |
| Horiz. Scale: None Vert. Scale: As Noted | | | | | Revised: |
| Staff Bridge Branch - Unit 0224 AJP | | | | Region 6 TG | Void: |

| PEDESTRIAN FENCE (1 OF 3) | | | | Project No./Code |
|---|---|---|---|---|
| Designer: M. Mohseni | Structure Numbers | F-16-XD | | C 088A-024 |
| Detailer: R. Olmos | | | | 16628 |
| Sheet Subset: Bridge | Subset Sheets: B36 of 46 | | | Sheet Number |

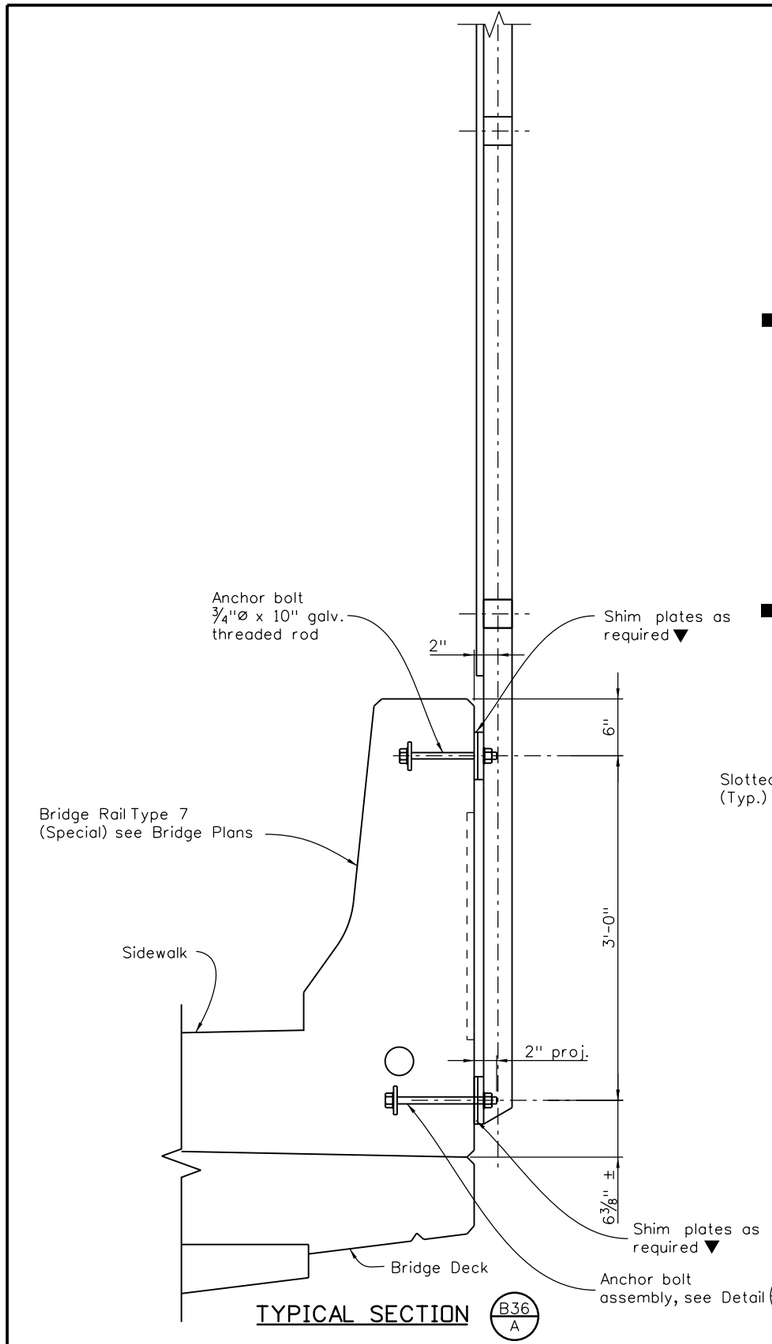


TYPICAL SECTION B36/A

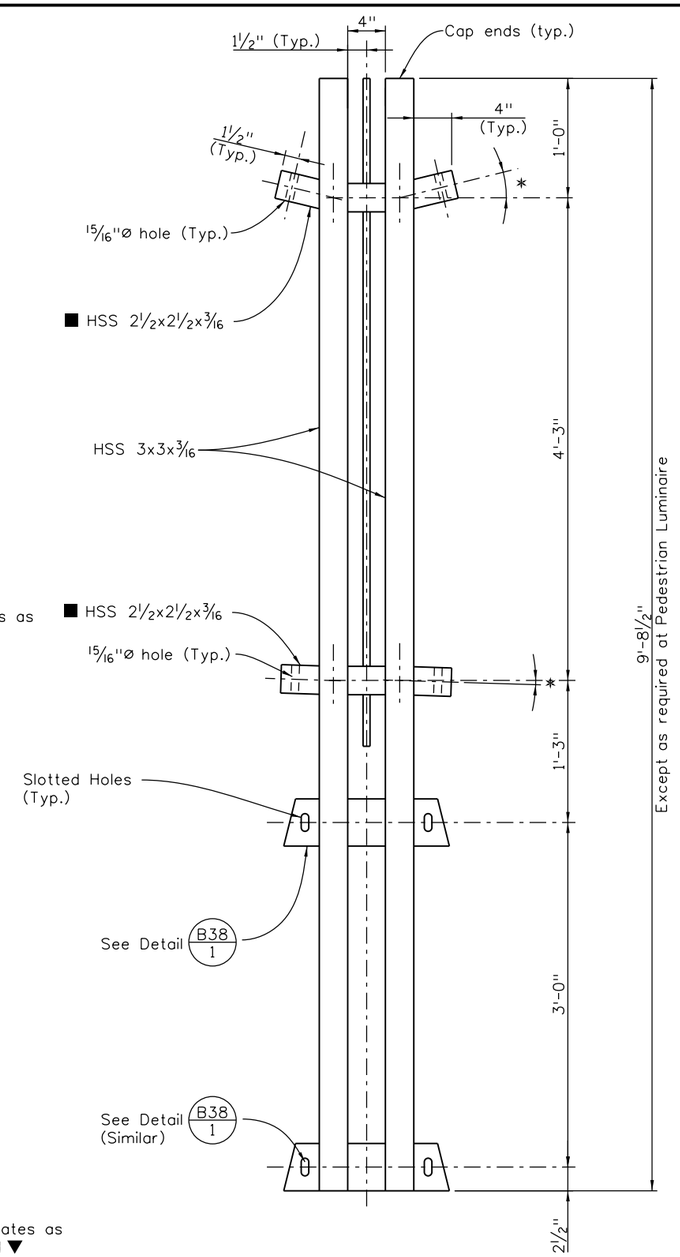


POST ASSEMBLY

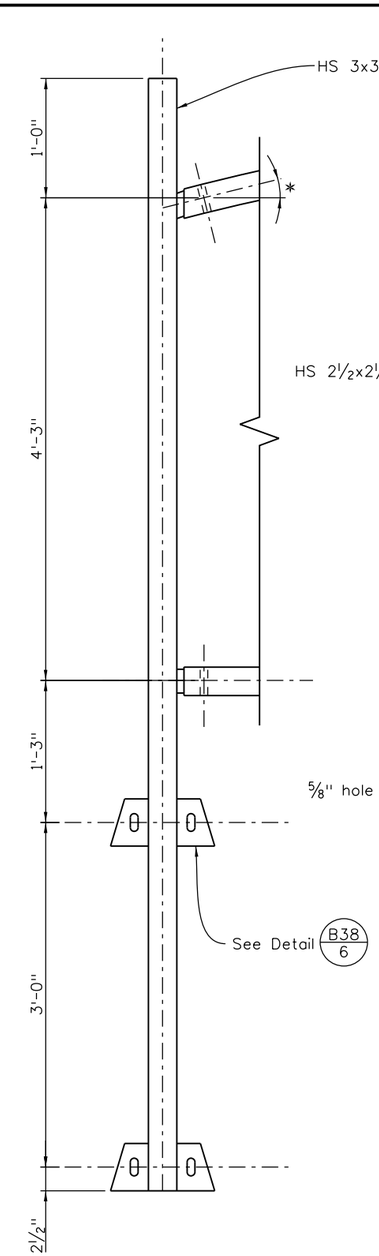


END POST ASSEMBLY

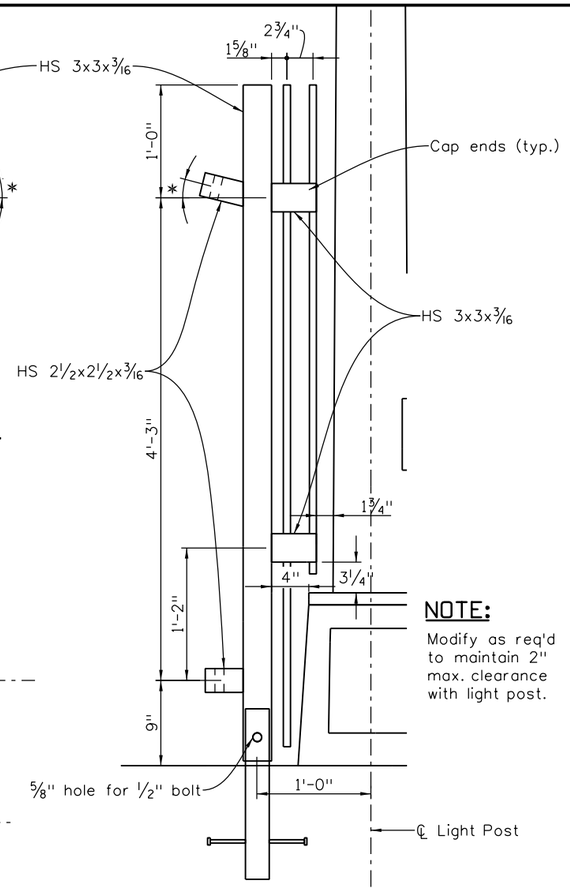


POST ASSEMBLY
AT LIGHT POST

**NOTE:**
Modify as req'd to maintain 2" max. clearance with light post.

Notes:

1. For Pedestrian Luminaire Details, see Sht. B28

■ Fabricate and align such that railing panels follow slope of top of bridge rail.

▼ Provide shim plates as required to erect post assembly plumb & vertical, see Detail B38/3.

∗ Angle varies with vertical profile and post location.

| Design | | | Detail | | | Quantities | | |
|---|---|---|---|---|---|---|---|---|
| | INITIAL | DATE | | INITIAL | DATE | | INITIAL | DATE |
| Designed By | MM | 06/11 | Detailed By | RD | 06/11 | Quantities By | RD | 06/11 |
| Checked By | LF | 05/11 | Checked By | MM | 06/11 | Checked By | MM/LF | 06/11 |

Print Date: 8/1/2011
Drawing File Name: 36-37-38Pedestrian Fence.dgn
Horiz. Scale: None Vert. Scale: As Noted
Staff Bridge Branch - Unit 0224 AJP

| Sheet Revisions | | |
|---|---|---|
| Date: | Comments | Init. |
| | | |
| | | |
| | | |
| | | |

Colorado Department of Transportation
8833 South Wadsworth Court
Littleton, CO 80128
Phone: 303-972-9112 FAX: 303-972-9114
Region 6 TG

As Constructed
No Revisions:
Revised:
Void:

PEDESTRIAN FENCE
(2 OF 3)

Designer: M. Mohseni
Detailer: R. Olmos
Sheet Subset: Bridge
Structure Numbers: F-16-XO
Subset Sheets: B37 of 46

Project No./Code
C 088A-024
16628
Sheet Number

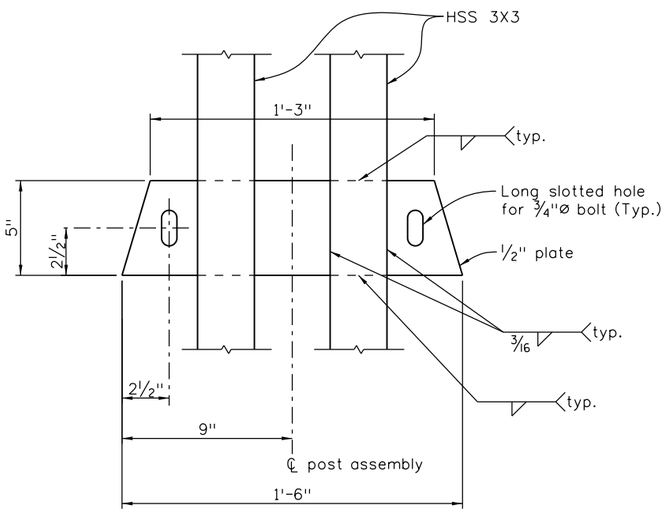


DETAIL (B37/1)

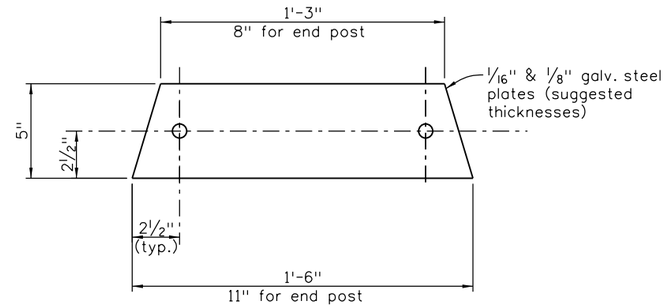


Notes:
Contractor shall determine the quantity of shim plates required to erect posts plumb & vertical. Cost of shim plates to be included in cost of item 514, pedestrian railing.

SHIM PLATE DETAIL (B37/3)

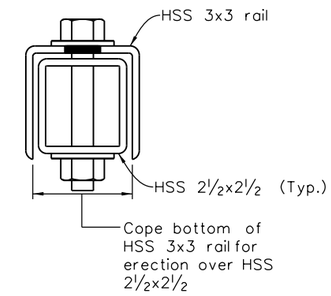


SECTION (A)

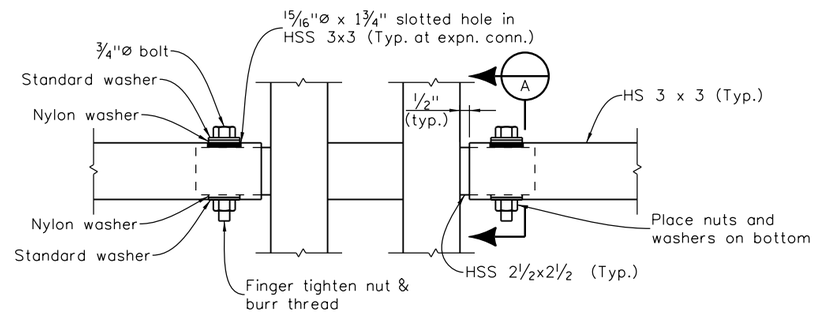


EXPANSION CONNECTION (B36/4)

Pickets not shown for clarity.

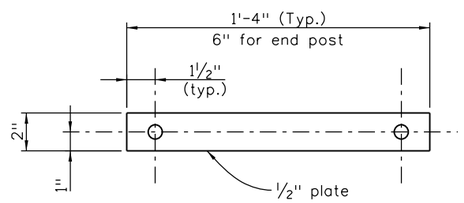


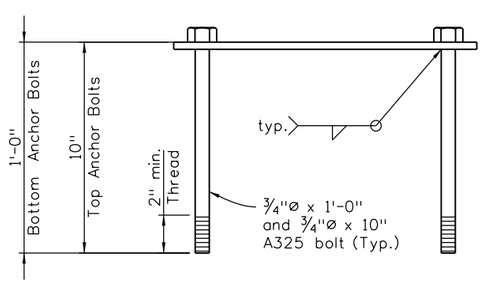


ANCHOR BOLT ASSEMBLY (B37/2)

Galvanize assembly after fabrication

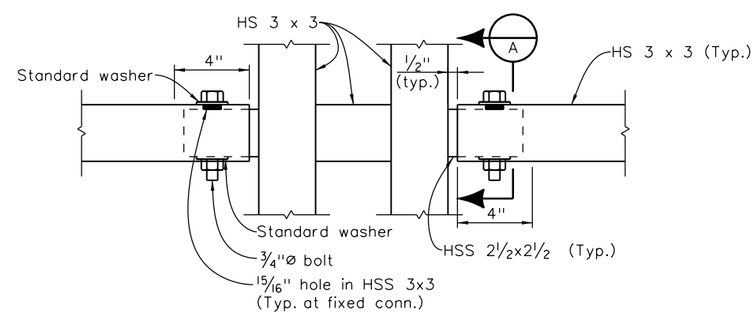


FIXED CONNECTION (B36/5)

Pickets not shown for clarity.

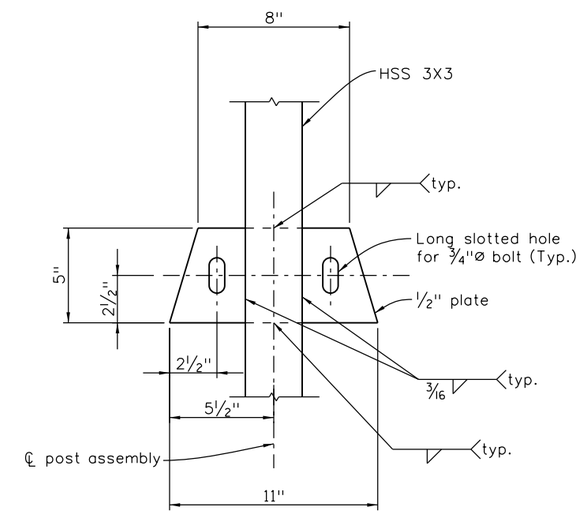


DETAIL (B37/6)

| Design | | | | Detail | | | | Quantities | | | |
|---|---|---|---|---|---|---|---|---|---|---|---|
| Designed By | INITIAL | DATE | | Detailed By | INITIAL | DATE | | Quantities By | INITIAL | DATE | |
| MM | xx-xx | | | RD | | xx/xx | | xxx | | xx/xx | |
| Checked By | zxzz | xx/xx | | Checked By | xxx | xx\xx | | Checked By | xxxx | xx/xx | |

| | | | |
|---|---|---|---|
| Print Date: 8/1/2011 | Sheet Revisions | Colorado Department of Transportation | As Constructed |
| Drawing File Name: 36-37-38Pedestrian Fence.dgn | Date: / Comments / Init. | 8833 South Wadsworth Court<br>Littleton, CO 80128<br>Phone: 303-972-9112 FAX: 303-972-9114 | No Revisions: |
| Horiz. Scale: None / Vert. Scale: As Noted | | Region 6 TG | Revised: |
| Staff Bridge Branch - Unit 0224 AJP | | | Void: |

| PEDESTRIAN FENCE (3 OF 3) | | | | Project No./Code |
|---|---|---|---|---|
| Designer: M. Mohseni | Structure Numbers | F-16-XO | | C 088A-024 |
| Detailer: R. Olmos | | | | 16628 |
| Sheet Subset: Bridge | Subset Sheets: B38 of 46 | | | Sheet Number |

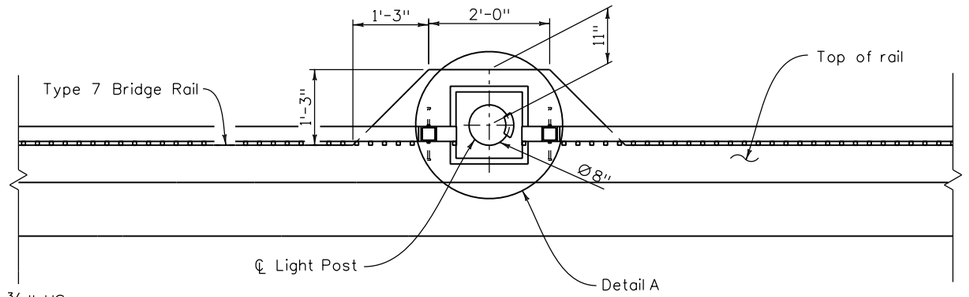


PLAN

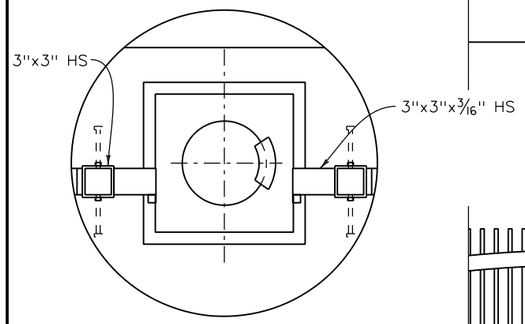


DETAIL A

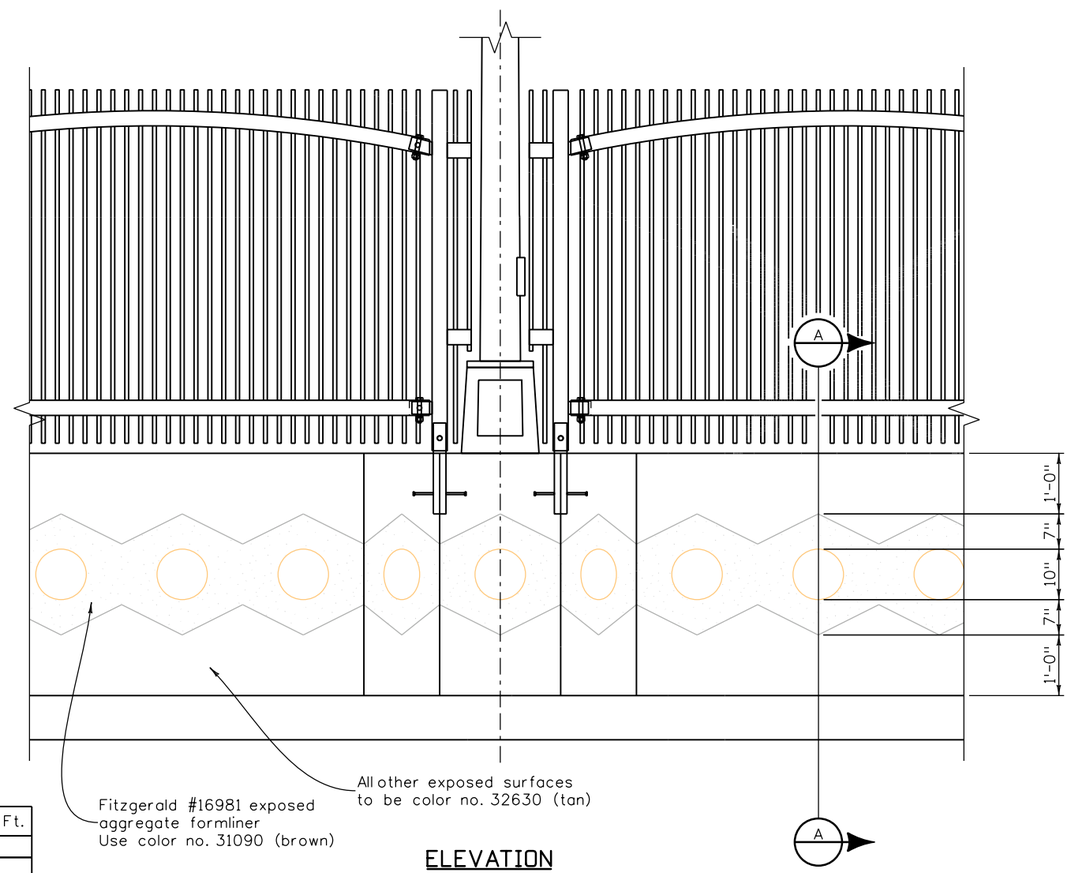


ELEVATION

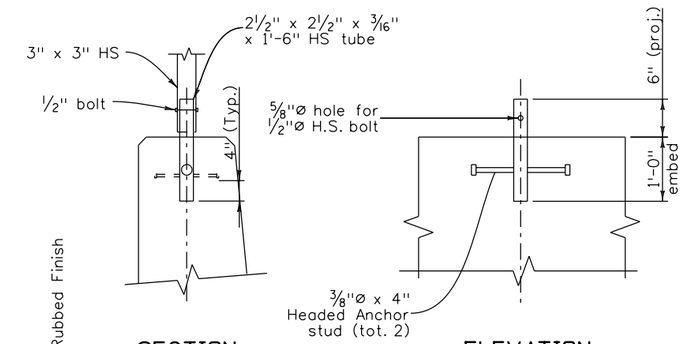


SECTION ELEVATION

ANCHORAGE DETAIL

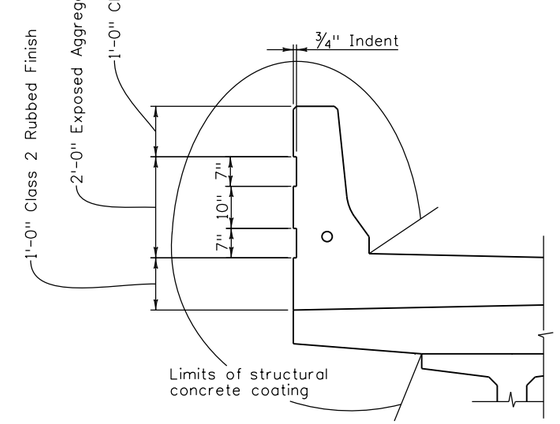


SECTION A

INFORMATION ONLY

| Description | Unit | Per Lin. Ft. |
|---|---|---|
| | | |
| Concrete Class D | Cu. Yd. | 0.12 |
| | | |
| Reinforcing Steel (Epoxy) | Lb. | 16.2 |
| | | |
| | | |

| Design | | | | Detail | | | | Quantities | | |
|---|---|---|---|---|---|---|---|---|---|---|
| | INITIAL | DATE | | INITIAL | DATE | | INITIAL | DATE |
| Designed By | MM | 06/11 | Detailed By | RQ | 06/11 | Quantities By | RQ | 06/11 |
| Checked By | LF | 05/11 | Checked By | MM | 06/11 | Checked By | MM/LF | 06/11 |

Print Date: 8/1/2011
Drawing File Name: 39Bridge Rail Arch.and Fence Detail.dgn
Horiz. Scale: None Vert. Scale: As Noted
Staff Bridge Branch - Unit 0224 AJP

| Sheet Revisions | | |
|---|---|---|
| Date: | Comments | Init. |
| | | |
| | | |
| | | |
| | | |

Colorado Department of Transportation
8833 South Wadsworth Court
Littleton, CO 80128
Phone: 303-972-9112 FAX: 303-972-9114
Region 6 TG

As Constructed
No Revisions:
Revised:
Void:

BRIDGE RAIL ARCHITECTURAL AND FENCE DETAILS

Designer: M. Mohseni
Detailer: R. Olmos
Sheet Subset: Bridge
Structure Numbers: F-16-XD
Subset Sheets: B39 of 46

Project No./Code
C 088A-024
16628
Sheet Number

DESCRIPTION

Units: feet;
Project: C 088A-024; Subaccount: 16628;
Designer: M. Mohseni; Detailer: S. Fussnecker;
Location: Federal Blvd (SH 88) over US 6;
2 Span (105'-0", 140'-0") Prestressed Concrete I-Girder (BT72) Continuous
140'-0" Out to Out (120'-0" Curb to Curb)

HORIZONTAL ALIGNMENT DATA

HORIZONTAL TANGENT

VERTICAL ALIGNMENT DATA

| ELEVATION AT PI | ELEVATION AT GRADE | STATION | | ELEVATION AT GRADE | ELEVATION AT PI | PERCENT GRADE |
|---|---|---|---|---|---|---|
| | | | | | | 1.870000 |
| | | 107+38.9800 | PC | 5260.7785 | | |
| | | 108+83.9800 | PI | 5261.7681 | 5263.4900 | |
| | | 110+28.9800 | PT | 5259.3140 | | |
| | | | | | | -2.880000 |

TABLE OF ROADWAY CROSS-SLOPES (SUPERELEVATION: E= -NC- )

| STATION | SLOPE LEFT | SLOPE RIGHT | VC LENGTH |
|---|---|---|---|
| (ON TANGENT) | -0.0200 | 0.0200 | 75.00 (MAX) |

OFFSET PROFILE CONTROL TO PIVOT POINT = 0.0000 FEET

LIMITS OF VALID ELEVATION AND CROSS-SLOPE DATA

| BEGIN | END |
|---|---|
| * UNLIMITED * | * UNLIMITED * |

LAYOUT LINE DATA

LAYOUT LINE DEFINED TO BE COINCIDENT WITH HORIZONTAL CONTROL

| | HCL STA | OFFSET | X | Y |
|---|---|---|---|---|
| LAYOUT LINE INTERSECTS REF LINE AT | 107+76.6900 | 0.00000000 | 0.0000 | 0.0000 |

DEAD LOAD DEFLECTION DATA

DEFLECTIONS AT TENTH POINTS FROM FITTED CURVE

| | 0.0 | 0.1 | 0.2 | 0.3 | 0.4 | 0.5 | 0.6 | 0.7 | 0.8 | 0.9 | 1.0 | |
|---|---|---|---|---|---|---|---|---|---|---|---|---|
| FOR BENT LINE: CL ABUT 1 07 CARD(S): 1 GIRDER LINES REFERENCED BY: (BLANK) | | | | | | | | | | | | |
| INCH | 0.0000 | 0.2574 | 0.4883 | 0.6668 | 0.7753 | 0.8044 | 0.7528 | 0.6273 | 0.4432 | 0.2236 | 0.0000 | INCH |
| FOOT | 0.0000 | 0.0214 | 0.0407 | 0.0556 | 0.0646 | 0.0670 | 0.0627 | 0.0523 | 0.0369 | 0.0186 | 0.0000 | FOOT |
| SLOPE | 0.216648 | | | | | | | | | | -0.177510 | SLOPE |

A4= 0.00000
A3= 0.00000
A2= 3.41085
A1=-2.94119
A0=-2.59978

| | 0.0 | 0.1 | 0.2 | 0.3 | 0.4 | 0.5 | 0.6 | 0.7 | 0.8 | 0.9 | 1.0 | |
|---|---|---|---|---|---|---|---|---|---|---|---|---|
| FOR BENT LINE: AHBRG P2 07 CARD(S): 1 GIRDER LINES REFERENCED BY: (BLANK) | | | | | | | | | | | | |
| INCH | 0.0000 | 0.8149 | 1.5762 | 2.1932 | 2.5997 | 2.7541 | 2.6392 | 2.2623 | 1.6552 | 0.8742 | 0.0000 | INCH |
| FOOT | 0.0000 | 0.0679 | 0.1313 | 0.1828 | 0.2166 | 0.2295 | 0.2199 | 0.1885 | 0.1379 | 0.0728 | 0.0000 | FOOT |
| SLOPE | 0.671108 | | | | | | | | | | -0.739710 | SLOPE |

A4= 0.00000
A3= 0.00000
A2= 10.2067
A1=-11.0299
A0=-8.05330

| BENT LINE DESCRIPTION | STATION | OFFSET | ELEVATION | | FROM LAYOUT LINE OFFSET X | ORDINATE Y | BENT LINE LENGTH FROM Y-AXIS | SKEW D M S | GIRDER LINE LENGTH FROM REF LINE | ROADWAY CROSS-SLOPE |
|---|---|---|---|---|---|---|---|---|---|---|
| * HORIZONTAL CONTROL LINE * | | | AT FINISHED GRADE | | | | | | | |
| END APP1 | 107+56.6900 | 0.0000 | 5261.0840 | | 0.0000 | -20.0000 | 0.0000 | 0 00 00.00 | -20.0000 | +/-.020000 |
| END WWA1 | 107+58.1900 | 0.0000 | 5261.1075 | | 0.0000 | -18.5000 | 0.0000 | 0 00 00.00 | -18.5000 | +/-.020000 |
| BF ABUT 1 | 107+76.6900 | 0.0000 | 5261.3672 | | 0.0000 | 0.0000 | 0.0000 | 0 00 00.00 | 0.0000 | +/-.020000 |
| CL ABUT 1 | 107+78.1900 | 0.0000 | 5261.3858 | 10 | 0.0000 | 1.5000 | 0.0000 | 0 00 00.00 | 1.5000 | +/-.020000 |
| BKBRG P2 | 108+81.9400 | 0.0000 | 5261.7781 | 1 | 0.0000 | 105.2500 | 0.0000 | 0 00 00.00 | 105.2500 | +/-.020000 |
| CL PIER 2 | 108+83.1900 | 0.0000 | 5261.7721 | | 0.0000 | 106.5000 | 0.0000 | 0 00 00.00 | 106.5000 | +/-.020000 |
| AHBRG P2 | 108+84.4400 | 0.0000 | 5261.7658 | 10 | 0.0000 | 107.7500 | 0.0000 | 0 00 00.00 | 107.7500 | +/-.020000 |
| CL ABUT 3 | 110+23.1900 | 0.0000 | 5259.4780 | 1 | 0.0000 | 246.5000 | 0.0000 | 0 00 00.00 | 246.5000 | +/-.020000 |
| BF ABUT 3 | 110+24.6900 | 0.0000 | 5259.4360 | | 0.0000 | 248.0000 | 0.0000 | 0 00 00.00 | 248.0000 | +/-.020000 |
| END APP3 | 110+32.6900 | 0.0000 | 5259.2072 | 0.0 | 0.0000 | 256.0000 | 0.0000 | 0 00 00.00 | 256.0000 | +/-.020000 |

L EDGE DECK — PARALLEL TO HORIZONTAL CONTROL — 0.250000 FEET BELOW FINISHED GRADE

| BENT LINE | STATION | OFFSET | ELEVATION | ELEV+DL | X | Y | BENT LNTH | SKEW | GIRDER LNTH | CRS-SLP |
|---|---|---|---|---|---|---|---|---|---|---|
| END APP1 | 107+56.6900 | -70.0000 | 5259.4340 | | -70.0000 | -20.0000 | -70.0000 | 0 00 00.00 | -20.0000 | -0.020000 |
| END WWA1 | 107+58.1900 | -70.0000 | 5259.4575 | | -70.0000 | -18.5000 | -70.0000 | 0 00 00.00 | -18.5000 | -0.020000 |
| BF ABUT 1 | 107+76.6900 | -70.0000 | 5259.7172 | | -70.0000 | 0.0000 | -70.0000 | 0 00 00.00 | 0.0000 | -0.020000 |
| CL ABUT 1 | 107+78.1900 | -70.0000 | 5259.7358 | 259.7358 | -70.0000 | 1.5000 | -70.0000 | 0 00 00.00 | 1.5000 | -0.020000 |
| F-1 | 107+88.5650 | -70.0000 | 5259.8544 | 259.8758 | -70.0000 | 11.8750 | | | 11.8750 | -0.020000 |
| F-2 | 107+98.9400 | -70.0000 | 5259.9553 | 259.9960 | -70.0000 | 22.2500 | | | 22.2500 | -0.020000 |
| F-3 | 108+09.3150 | -70.0000 | 5260.0386 | 260.0942 | -70.0000 | 32.6250 | | | 32.6250 | -0.020000 |
| F-4 | 108+19.6900 | -70.0000 | 5260.1043 | 260.1689 | -70.0000 | 43.0000 | | | 43.0000 | -0.020000 |
| F-5 | 108+30.0650 | -70.0000 | 5260.1523 | 260.2194 | -70.0000 | 53.3750 | | | 53.3750 | -0.020000 |
| F-6 | 108+40.4400 | -70.0000 | 5260.1827 | 260.2455 | -70.0000 | 63.7500 | | | 63.7500 | -0.020000 |
| F-7 | 108+50.8150 | -70.0000 | 5260.1955 | 260.2478 | -70.0000 | 74.1250 | | | 74.1250 | -0.020000 |
| F-8 | 108+61.1900 | -70.0000 | 5260.1907 | 260.2276 | -70.0000 | 84.5000 | | | 84.5000 | -0.020000 |
| F-9 | 108+71.5650 | -70.0000 | 5260.1682 | 260.1868 | -70.0000 | 94.8750 | | | 94.8750 | -0.020000 |
| BKBRG P2 | 108+81.9400 | -70.0000 | 5260.1281 | 260.1281 | -70.0000 | 105.2500 | -70.0000 | 0 00 00.00 | 105.2500 | -0.020000 |
| CL PIER 2 | 108+83.1900 | -70.0000 | 5260.1221 | | -70.0000 | 106.5000 | -70.0000 | 0 00 00.00 | 106.5000 | -0.020000 |
| AHBRG P2 | 108+84.4400 | -70.0000 | 5260.1158 | 260.1158 | -70.0000 | 107.7500 | -70.0000 | 0 00 00.00 | 107.7500 | -0.020000 |
| F-1 | 108+98.3150 | -70.0000 | 5260.0289 | 260.0968 | -70.0000 | 121.6250 | | | 121.6250 | -0.020000 |
| F-2 | 109+12.1900 | -70.0000 | 5259.9105 | 260.0418 | -70.0000 | 135.5000 | | | 135.5000 | -0.020000 |
| F-3 | 109+26.0650 | -70.0000 | 5259.7605 | 259.9433 | -70.0000 | 149.3750 | | | 149.3750 | -0.020000 |
| F-4 | 109+39.9400 | -70.0000 | 5259.5791 | 259.7957 | -70.0000 | 163.2500 | | | 163.2500 | -0.020000 |
| F-5 | 109+53.8150 | -70.0000 | 5259.3661 | 259.5956 | -70.0000 | 177.1250 | | | 177.1250 | -0.020000 |
| F-6 | 109+67.6900 | -70.0000 | 5259.1215 | 259.3414 | -70.0000 | 191.0000 | | | 191.0000 | -0.020000 |
| F-7 | 109+81.5650 | -70.0000 | 5258.8454 | 259.0340 | -70.0000 | 204.8750 | | | 204.8750 | -0.020000 |
| F-8 | 109+95.4400 | -70.0000 | 5258.5378 | 258.6758 | -70.0000 | 218.7500 | | | 218.7500 | -0.020000 |
| F-9 | 110+09.3150 | -70.0000 | 5258.1987 | 258.2715 | -70.0000 | 232.6250 | | | 232.6250 | -0.020000 |
| CL ABUT 3 | 110+23.1900 | -70.0000 | 5257.8280 | 257.8280 | -70.0000 | 246.5000 | -70.0000 | 0 00 00.00 | 246.5000 | -0.020000 |
| BF ABUT 3 | 110+24.6900 | -70.0000 | 5257.7860 | | -70.0000 | 248.0000 | -70.0000 | 0 00 00.00 | 248.0000 | -0.020000 |
| END APP3 | 110+32.6900 | -70.0000 | 5257.5572 | | -70.0000 | 256.0000 | -70.0000 | 0 00 00.00 | 256.0000 | -0.020000 |

Note: Elevations are at top of concrete deck 3 Inches below Finished Grade.

Positive Roadway Cross Slope is Upwards from the Profile Grade Line.

These Stations, Coordinates, Offsets and Lengths define the layout of the structure in a two dimensional horizontal plane. Elevations define the final grade of the finished concrete deck. Fabrication of structural components through the direct use of this information is not intended or advisable.

| Design | INITIAL | DATE | Detail | INITIAL | DATE | Quantities | INITIAL | DATE |
|---|---|---|---|---|---|---|---|---|
| Designed By | MM | 06/11 | Detailed By | SJF | 07/11 | Quantities By | RD | 06/11 |
| Checked By | LF | 05/11 | Checked By | MM | 07/11 | Checked By | MM/LF | 06/11 |

Print Date: 8/1/2011
File Name: 40-46 deck elevations.dgn
Horiz. Scale: None Vert. Scale: As Noted
Staff Bridge Branch - Unit 0224 Unit Leader: AJP

| Sheet Revisions | | |
|---|---|---|
| Date: | Comments | Init. |
| | | |
| | | |
| | | |
| | | |

Colorado Department of Transportation
DOT DEPARTMENT OF TRANSPORTATION
8833 South Wadsworth Court
Littleton, CO 80128
Phone: 303-972-9112 FAX: 303-972-9114
Region 6 TG

As Constructed
No Revisions:
Revised:
Void:

BRIDGE DECK ELEVATIONS

Designer: M. Mohseni
Detailer: S. Fussnecker
Sheet Subset: Bridge
Structure Numbers: F-16-XO
Subset Sheets: B40 of 46

Project No./Code
C 088A-024
16628
Sheet Number

fussneckers 11:58:30 AM B:\0224\16628_Federal_6th\My Project\40-46 deck elevations.dgn

L BRDGRAIL — PARALLEL TO HORIZONTAL CONTROL — 0.250000 FEET BELOW FINISHED GRADE

| BENT LINE | STATION | OFFSET | ELEVATION | ELEV+DL | X | Y | BENT LNTH | SKEW | GIRDER LNTH | CRS-SLP |
|---|---|---|---|---|---|---|---|---|---|---|
| END APP1 | 107+56.6900 | -68.5000 | 5259.4640 | | -68.5000 | -20.0000 | -68.5000 | 0 00 00.00 | -20.0000 | -0.020000 |
| BF ABUT 1 | 107+76.6900 | -68.5000 | 5259.7472 | | -68.5000 | 0.0000 | -68.5000 | 0 00 00.00 | 0.0000 | -0.020000 |
| CL ABUT 1 | 107+78.1900 | -68.5000 | 5259.7658 | 259.7658 | -68.5000 | 1.5000 | -68.5000 | 0 00 00.00 | 1.5000 | -0.020000 |
| F-1 | 107+88.5650 | -68.5000 | 5259.8844 | 259.9058 | -68.5000 | 11.8750 | | | 11.8750 | -0.020000 |
| F-2 | 107+98.9400 | -68.5000 | 5259.9853 | 260.0260 | -68.5000 | 22.2500 | | | 22.2500 | -0.020000 |
| F-3 | 108+09.3150 | -68.5000 | 5260.0686 | 260.1242 | -68.5000 | 32.6250 | | | 32.6250 | -0.020000 |
| F-4 | 108+19.6900 | -68.5000 | 5260.1343 | 260.1989 | -68.5000 | 43.0000 | | | 43.0000 | -0.020000 |
| F-5 | 108+30.0650 | -68.5000 | 5260.1823 | 260.2494 | -68.5000 | 53.3750 | | | 53.3750 | -0.020000 |
| F-6 | 108+40.4400 | -68.5000 | 5260.2127 | 260.2755 | -68.5000 | 63.7500 | | | 63.7500 | -0.020000 |
| F-7 | 108+50.8150 | -68.5000 | 5260.2255 | 260.2778 | -68.5000 | 74.1250 | | | 74.1250 | -0.020000 |
| F-8 | 108+61.1900 | -68.5000 | 5260.2207 | 260.2576 | -68.5000 | 84.5000 | | | 84.5000 | -0.020000 |
| F-9 | 108+71.5650 | -68.5000 | 5260.1982 | 260.2168 | -68.5000 | 94.8750 | | | 94.8750 | -0.020000 |
| BKBRG P2 | 108+81.9400 | -68.5000 | 5260.1581 | 260.1581 | -68.5000 | 105.2500 | -68.5000 | 0 00 00.00 | 105.2500 | -0.020000 |
| CL PIER 2 | 108+83.1900 | -68.5000 | 5260.1521 | | -68.5000 | 106.5000 | -68.5000 | 0 00 00.00 | 106.5000 | -0.020000 |
| AHBRG P2 | 108+84.4400 | -68.5000 | 5260.1458 | 260.1458 | -68.5000 | 107.7500 | -68.5000 | 0 00 00.00 | 107.7500 | -0.020000 |
| F-1 | 108+98.3150 | -68.5000 | 5260.0589 | 260.1268 | -68.5000 | 121.6250 | | | 121.6250 | -0.020000 |
| F-2 | 109+12.1900 | -68.5000 | 5259.9405 | 260.0718 | -68.5000 | 135.5000 | | | 135.5000 | -0.020000 |
| F-3 | 109+26.0650 | -68.5000 | 5259.7905 | 259.9733 | -68.5000 | 149.3750 | | | 149.3750 | -0.020000 |
| F-4 | 109+39.9400 | -68.5000 | 5259.6091 | 259.8257 | -68.5000 | 163.2500 | | | 163.2500 | -0.020000 |
| F-5 | 109+53.8150 | -68.5000 | 5259.3961 | 259.6256 | -68.5000 | 177.1250 | | | 177.1250 | -0.020000 |
| F-6 | 109+67.6900 | -68.5000 | 5259.1515 | 259.3714 | -68.5000 | 191.0000 | | | 191.0000 | -0.020000 |
| F-7 | 109+81.5650 | -68.5000 | 5258.8754 | 259.0640 | -68.5000 | 204.8750 | | | 204.8750 | -0.020000 |
| F-8 | 109+95.4400 | -68.5000 | 5258.5678 | 258.7058 | -68.5000 | 218.7500 | | | 218.7500 | -0.020000 |
| F-9 | 110+09.3150 | -68.5000 | 5258.2287 | 258.3015 | -68.5000 | 232.6250 | | | 232.6250 | -0.020000 |
| CL ABUT 3 | 110+23.1900 | -68.5000 | 5257.8580 | 257.8580 | -68.5000 | 246.5000 | -68.5000 | 0 00 00.00 | 246.5000 | -0.020000 |
| BF ABUT 3 | 110+24.6900 | -68.5000 | 5257.8160 | | -68.5000 | 248.0000 | -68.5000 | 0 00 00.00 | 248.0000 | -0.020000 |
| END APP3 | 110+32.6900 | -68.5000 | 5257.5872 | | -68.5000 | 256.0000 | -68.5000 | 0 00 00.00 | 256.0000 | -0.020000 |

CL GIRDER 1 — PARALLEL TO HORIZONTAL CONTROL — 0.250000 FEET BELOW FINISHED GRADE

| BENT LINE | STATION | OFFSET | ELEVATION | ELEV+DL | X | Y | BENT LNTH | SKEW | GIRDER LNTH | CRS-SLP |
|---|---|---|---|---|---|---|---|---|---|---|
| END APP1 | 107+56.6900 | -66.7500 | 5259.4990 | | -66.7500 | -20.0000 | -66.7500 | 0 00 00.00 | -20.0000 | -0.020000 |
| BF ABUT 1 | 107+76.6900 | -66.7500 | 5259.7822 | | -66.7500 | 0.0000 | -66.7500 | 0 00 00.00 | 0.0000 | -0.020000 |
| CL ABUT 1 | 107+78.1900 | -66.7500 | 5259.8008 | 259.8008 | -66.7500 | 1.5000 | -66.7500 | 0 00 00.00 | 1.5000 | -0.020000 |
| F-1 | 107+88.5650 | -66.7500 | 5259.9194 | 259.9408 | -66.7500 | 11.8750 | | | 11.8750 | -0.020000 |
| F-2 | 107+98.9400 | -66.7500 | 5260.0203 | 260.0610 | -66.7500 | 22.2500 | | | 22.2500 | -0.020000 |
| F-3 | 108+09.3150 | -66.7500 | 5260.1036 | 260.1592 | -66.7500 | 32.6250 | | | 32.6250 | -0.020000 |
| F-4 | 108+19.6900 | -66.7500 | 5260.1693 | 260.2339 | -66.7500 | 43.0000 | | | 43.0000 | -0.020000 |
| F-5 | 108+30.0650 | -66.7500 | 5260.2173 | 260.2844 | -66.7500 | 53.3750 | | | 53.3750 | -0.020000 |
| F-6 | 108+40.4400 | -66.7500 | 5260.2477 | 260.3105 | -66.7500 | 63.7500 | | | 63.7500 | -0.020000 |
| F-7 | 108+50.8150 | -66.7500 | 5260.2605 | 260.3128 | -66.7500 | 74.1250 | | | 74.1250 | -0.020000 |
| F-8 | 108+61.1900 | -66.7500 | 5260.2557 | 260.2926 | -66.7500 | 84.5000 | | | 84.5000 | -0.020000 |
| F-9 | 108+71.5650 | -66.7500 | 5260.2332 | 260.2518 | -66.7500 | 94.8750 | | | 94.8750 | -0.020000 |
| BKBRG P2 | 108+81.9400 | -66.7500 | 5260.1931 | 260.1931 | -66.7500 | 105.2500 | -66.7500 | 0 00 00.00 | 105.2500 | -0.020000 |
| CL PIER 2 | 108+83.1900 | -66.7500 | 5260.1871 | | -66.7500 | 106.5000 | -66.7500 | 0 00 00.00 | 106.5000 | -0.020000 |
| AHBRG P2 | 108+84.4400 | -66.7500 | 5260.1808 | 260.1808 | -66.7500 | 107.7500 | -66.7500 | 0 00 00.00 | 107.7500 | -0.020000 |
| F-1 | 108+98.3150 | -66.7500 | 5260.0939 | 260.1618 | -66.7500 | 121.6250 | | | 121.6250 | -0.020000 |
| F-2 | 109+12.1900 | -66.7500 | 5259.9755 | 260.1068 | -66.7500 | 135.5000 | | | 135.5000 | -0.020000 |
| F-3 | 109+26.0650 | -66.7500 | 5259.8255 | 260.0083 | -66.7500 | 149.3750 | | | 149.3750 | -0.020000 |
| F-4 | 109+39.9400 | -66.7500 | 5259.6441 | 259.8607 | -66.7500 | 163.2500 | | | 163.2500 | -0.020000 |
| F-5 | 109+53.8150 | -66.7500 | 5259.4311 | 259.6606 | -66.7500 | 177.1250 | | | 177.1250 | -0.020000 |
| F-6 | 109+67.6900 | -66.7500 | 5259.1865 | 259.4064 | -66.7500 | 191.0000 | | | 191.0000 | -0.020000 |
| F-7 | 109+81.5650 | -66.7500 | 5258.9104 | 259.0990 | -66.7500 | 204.8750 | | | 204.8750 | -0.020000 |
| F-8 | 109+95.4400 | -66.7500 | 5258.6028 | 258.7408 | -66.7500 | 218.7500 | | | 218.7500 | -0.020000 |
| F-9 | 110+09.3150 | -66.7500 | 5258.2637 | 258.3365 | -66.7500 | 232.6250 | | | 232.6250 | -0.020000 |
| CL ABUT 3 | 110+23.1900 | -66.7500 | 5257.8930 | 257.8930 | -66.7500 | 246.5000 | -66.7500 | 0 00 00.00 | 246.5000 | -0.020000 |
| BF ABUT 3 | 110+24.6900 | -66.7500 | 5257.8510 | | -66.7500 | 248.0000 | -66.7500 | 0 00 00.00 | 248.0000 | -0.020000 |
| END APP3 | 110+32.6900 | -66.7500 | 5257.6222 | | -66.7500 | 256.0000 | -66.7500 | 0 00 00.00 | 256.0000 | -0.020000 |

L WALK CURB — PARALLEL TO HORIZONTAL CONTROL — 0.250000 FEET BELOW FINISHED GRADE

| BENT LINE | STATION | OFFSET | ELEVATION | ELEV+DL | X | Y | BENT LNTH | SKEW | GIRDER LNTH | CRS-SLP |
|---|---|---|---|---|---|---|---|---|---|---|
| END APP1 | 107+56.6900 | -60.0000 | 5259.6340 | | -60.0000 | -20.0000 | -60.0000 | 0 00 00.00 | -20.0000 | -0.020000 |
| BF ABUT 1 | 107+76.6900 | -60.0000 | 5259.9172 | | -60.0000 | 0.0000 | -60.0000 | 0 00 00.00 | 0.0000 | -0.020000 |
| CL ABUT 1 | 107+78.1900 | -60.0000 | 5259.9358 | 259.9358 | -60.0000 | 1.5000 | -60.0000 | 0 00 00.00 | 1.5000 | -0.020000 |
| F-1 | 107+88.5650 | -60.0000 | 5260.0544 | 260.0758 | -60.0000 | 11.8750 | | | 11.8750 | -0.020000 |
| F-2 | 107+98.9400 | -60.0000 | 5260.1553 | 260.1960 | -60.0000 | 22.2500 | | | 22.2500 | -0.020000 |
| F-3 | 108+09.3150 | -60.0000 | 5260.2386 | 260.2942 | -60.0000 | 32.6250 | | | 32.6250 | -0.020000 |
| F-4 | 108+19.6900 | -60.0000 | 5260.3043 | 260.3689 | -60.0000 | 43.0000 | | | 43.0000 | -0.020000 |
| F-5 | 108+30.0650 | -60.0000 | 5260.3523 | 260.4194 | -60.0000 | 53.3750 | | | 53.3750 | -0.020000 |
| F-6 | 108+40.4400 | -60.0000 | 5260.3827 | 260.4455 | -60.0000 | 63.7500 | | | 63.7500 | -0.020000 |
| F-7 | 108+50.8150 | -60.0000 | 5260.3955 | 260.4478 | -60.0000 | 74.1250 | | | 74.1250 | -0.020000 |
| F-8 | 108+61.1900 | -60.0000 | 5260.3907 | 260.4276 | -60.0000 | 84.5000 | | | 84.5000 | -0.020000 |
| F-9 | 108+71.5650 | -60.0000 | 5260.3682 | 260.3868 | -60.0000 | 94.8750 | | | 94.8750 | -0.020000 |
| BKBRG P2 | 108+81.9400 | -60.0000 | 5260.3281 | 260.3281 | -60.0000 | 105.2500 | -60.0000 | 0 00 00.00 | 105.2500 | -0.020000 |
| CL PIER 2 | 108+83.1900 | -60.0000 | 5260.3221 | | -60.0000 | 106.5000 | -60.0000 | 0 00 00.00 | 106.5000 | -0.020000 |
| AHBRG P2 | 108+84.4400 | -60.0000 | 5260.3158 | 260.3158 | -60.0000 | 107.7500 | -60.0000 | 0 00 00.00 | 107.7500 | -0.020000 |
| F-1 | 108+98.3150 | -60.0000 | 5260.2289 | 260.2968 | -60.0000 | 121.6250 | | | 121.6250 | -0.020000 |
| F-2 | 109+12.1900 | -60.0000 | 5260.1105 | 260.2418 | -60.0000 | 135.5000 | | | 135.5000 | -0.020000 |
| F-3 | 109+26.0650 | -60.0000 | 5259.9605 | 260.1433 | -60.0000 | 149.3750 | | | 149.3750 | -0.020000 |
| F-4 | 109+39.9400 | -60.0000 | 5259.7791 | 259.9957 | -60.0000 | 163.2500 | | | 163.2500 | -0.020000 |
| F-5 | 109+53.8150 | -60.0000 | 5259.5661 | 259.7956 | -60.0000 | 177.1250 | | | 177.1250 | -0.020000 |
| F-6 | 109+67.6900 | -60.0000 | 5259.3215 | 259.5414 | -60.0000 | 191.0000 | | | 191.0000 | -0.020000 |
| F-7 | 109+81.5650 | -60.0000 | 5259.0454 | 259.2340 | -60.0000 | 204.8750 | | | 204.8750 | -0.020000 |
| F-8 | 109+95.4400 | -60.0000 | 5258.7378 | 258.8758 | -60.0000 | 218.7500 | | | 218.7500 | -0.020000 |
| F-9 | 110+09.3150 | -60.0000 | 5258.3987 | 258.4715 | -60.0000 | 232.6250 | | | 232.6250 | -0.020000 |
| CL ABUT 3 | 110+23.1900 | -60.0000 | 5258.0280 | 258.0280 | -60.0000 | 246.5000 | -60.0000 | 0 00 00.00 | 246.5000 | -0.020000 |
| BF ABUT 3 | 110+24.6900 | -60.0000 | 5257.9860 | | -60.0000 | 248.0000 | -60.0000 | 0 00 00.00 | 248.0000 | -0.020000 |
| END APP3 | 110+32.6900 | -60.0000 | 5257.7572 | | -60.0000 | 256.0000 | -60.0000 | 0 00 00.00 | 256.0000 | -0.020000 |

CL GIRDER 2 — PARALLEL TO HORIZONTAL CONTROL — 0.250000 FEET BELOW FINISHED GRADE

| BENT LINE | STATION | OFFSET | ELEVATION | ELEV+DL | X | Y | BENT LNTH | SKEW | GIRDER LNTH | CRS-SLP |
|---|---|---|---|---|---|---|---|---|---|---|
| END APP1 | 107+56.6900 | -59.3333 | 5259.6473 | | -59.3333 | -20.0000 | -59.3333 | 0 00 00.00 | -20.0000 | -0.020000 |
| BF ABUT 1 | 107+76.6900 | -59.3333 | 5259.9306 | | -59.3333 | 0.0000 | -59.3333 | 0 00 00.00 | 0.0000 | -0.020000 |
| CL ABUT 1 | 107+78.1900 | -59.3333 | 5259.9492 | 259.9492 | -59.3333 | 1.5000 | -59.3333 | 0 00 00.00 | 1.5000 | -0.020000 |
| F-1 | 107+88.5650 | -59.3333 | 5260.0677 | 260.0892 | -59.3333 | 11.8750 | | | 11.8750 | -0.020000 |
| F-2 | 107+98.9400 | -59.3333 | 5260.1687 | 260.2093 | -59.3333 | 22.2500 | | | 22.2500 | -0.020000 |
| F-3 | 108+09.3150 | -59.3333 | 5260.2520 | 260.3075 | -59.3333 | 32.6250 | | | 32.6250 | -0.020000 |
| F-4 | 108+19.6900 | -59.3333 | 5260.3176 | 260.3822 | -59.3333 | 43.0000 | | | 43.0000 | -0.020000 |
| F-5 | 108+30.0650 | -59.3333 | 5260.3657 | 260.4327 | -59.3333 | 53.3750 | | | 53.3750 | -0.020000 |
| F-6 | 108+40.4400 | -59.3333 | 5260.3961 | 260.4588 | -59.3333 | 63.7500 | | | 63.7500 | -0.020000 |
| F-7 | 108+50.8150 | -59.3333 | 5260.4089 | 260.4611 | -59.3333 | 74.1250 | | | 74.1250 | -0.020000 |
| F-8 | 108+61.1900 | -59.3333 | 5260.4040 | 260.4409 | -59.3333 | 84.5000 | | | 84.5000 | -0.020000 |
| F-9 | 108+71.5650 | -59.3333 | 5260.3815 | 260.4002 | -59.3333 | 94.8750 | | | 94.8750 | -0.020000 |
| BKBRG P2 | 108+81.9400 | -59.3333 | 5260.3414 | 260.3414 | -59.3333 | 105.2500 | -59.3333 | 0 00 00.00 | 105.2500 | -0.020000 |
| CL PIER 2 | 108+83.1900 | -59.3333 | 5260.3354 | | -59.3333 | 106.5000 | -59.3333 | 0 00 00.00 | 106.5000 | -0.020000 |
| AHBRG P2 | 108+84.4400 | -59.3333 | 5260.3291 | 260.3291 | -59.3333 | 107.7500 | -59.3333 | 0 00 00.00 | 107.7500 | -0.020000 |
| F-1 | 108+98.3150 | -59.3333 | 5260.2422 | 260.3101 | -59.3333 | 121.6250 | | | 121.6250 | -0.020000 |
| F-2 | 109+12.1900 | -59.3333 | 5260.1238 | 260.2552 | -59.3333 | 135.5000 | | | 135.5000 | -0.020000 |
| F-3 | 109+26.0650 | -59.3333 | 5259.9739 | 260.1566 | -59.3333 | 149.3750 | | | 149.3750 | -0.020000 |
| F-4 | 109+39.9400 | -59.3333 | 5259.7924 | 260.0090 | -59.3333 | 163.2500 | | | 163.2500 | -0.020000 |
| F-5 | 109+53.8150 | -59.3333 | 5259.5794 | 259.8089 | -59.3333 | 177.1250 | | | 177.1250 | -0.020000 |
| F-6 | 109+67.6900 | -59.3333 | 5259.3348 | 259.5548 | -59.3333 | 191.0000 | | | 191.0000 | -0.020000 |
| F-7 | 109+81.5650 | -59.3333 | 5259.0588 | 259.2473 | -59.3333 | 204.8750 | | | 204.8750 | -0.020000 |
| F-8 | 109+95.4400 | -59.3333 | 5258.7512 | 258.8891 | -59.3333 | 218.7500 | | | 218.7500 | -0.020000 |
| F-9 | 110+09.3150 | -59.3333 | 5258.4120 | 258.4849 | -59.3333 | 232.6250 | | | 232.6250 | -0.020000 |
| CL ABUT 3 | 110+23.1900 | -59.3333 | 5258.0413 | 258.0413 | -59.3333 | 246.5000 | -59.3333 | 0 00 00.00 | 246.5000 | -0.020000 |
| BF ABUT 3 | 110+24.6900 | -59.3333 | 5257.9994 | | -59.3333 | 248.0000 | -59.3333 | 0 00 00.00 | 248.0000 | -0.020000 |
| END APP3 | 110+32.6900 | -59.3333 | 5257.7705 | | -59.3333 | 256.0000 | -59.3333 | 0 00 00.00 | 256.0000 | -0.020000 |

| Quantities | | |
|---|---|---|
| Quantities By | INITIAL | DATE |
| RO | 06/11 | 06/11 |
| MM/LF | 06/11 | 06/11 |

| Detail | | |
|---|---|---|
| Detailed By | INITIAL | DATE |
| SJF | 07/11 | 07/11 |
| MM | 07/11 | 07/11 |

| Design | | |
|---|---|---|
| Designed By | INITIAL | DATE |
| MM | 06/11 | 06/11 |
| LF | 05/11 | 06/11 |

Note: Elevations are at top of concrete deck 3 Inches below Finished Grade.

Positive Roadway Cross Slope is Upwards from the Profile Grade Line.

These Stations, Coordinates, Offsets and Lengths define the layout of the structure in a two dimensional horizontal plane. Elevations define the final grade of the finished concrete deck. Fabrication of structural components through the direct use of this information is not intended or advisable.

Print Date: 8/1/2011
File Name: 40-46 deck elevations.dgn
Horiz. Scale: None Vert. Scale: As Noted
Staff Bridge Branch - Unit 0224 Unit Leader: AJP

Sheet Revisions

| Date: | Comments | Init. |
|---|---|---|
| | | |
| | | |
| | | |
| | | |

Colorado Department of Transportation
DOT DEPARTMENT OF TRANSPORTATION
8833 South Wadsworth Court
Littleton, CO 80128
Phone: 303-972-9112 FAX: 303-972-9114
Region 6 TG

As Constructed
No Revisions:
Revised:
Void:

BRIDGE DECK ELEVATIONS

Designer: M. Mohseni
Detailer: S. Fussnecker
Sheet Subset: Bridge
Structure Numbers: F-16-X0
Subset Sheets: B41 of 46

Project No./Code
C 088A-024
16628
Sheet Number

fussneckers 11:58:33 AM B:\0224\16628_Federal_6th\My Project\40-46 deck elevations.dgn

CL GIRDER 3 — PARALLEL TO HORIZONTAL CONTROL — 0.250000 FEET BELOW FINISHED GRADE

| BENT LINE | STATION | OFFSET | ELEVATION | ELEV+DL | X | Y | BENT LNTH | SKEW | GIRDER LNTH | CRS-SLP |
|---|---|---|---|---|---|---|---|---|---|---|
| END APP1 | 107+56.6900 | -51.9200 | 5259.7956 | | -51.9200 | -20.0000 | -51.9200 | 0 00 00.00 | -20.0000 | -0.020000 |
| BF ABUT 1 | 107+76.6900 | -51.9200 | 5260.0788 | | -51.9200 | 0.0000 | -51.9200 | 0 00 00.00 | 0.0000 | -0.020000 |
| CL ABUT 1 | 107+78.1900 | -51.9200 | 5260.0974 | 260.0974 | -51.9200 | 1.5000 | -51.9200 | 0 00 00.00 | 1.5000 | -0.020000 |
| F-1 | 107+88.5650 | -51.9200 | 5260.2160 | 260.2374 | -51.9200 | 11.8750 | | | 11.8750 | -0.020000 |
| F-2 | 107+98.9400 | -51.9200 | 5260.3169 | 260.3576 | -51.9200 | 22.2500 | | | 22.2500 | -0.020000 |
| F-3 | 108+09.3150 | -51.9200 | 5260.4002 | 260.4558 | -51.9200 | 32.6250 | | | 32.6250 | -0.020000 |
| F-4 | 108+19.6900 | -51.9200 | 5260.4659 | 260.5305 | -51.9200 | 43.0000 | | | 43.0000 | -0.020000 |
| F-5 | 108+30.0650 | -51.9200 | 5260.5139 | 260.5810 | -51.9200 | 53.3750 | | | 53.3750 | -0.020000 |
| F-6 | 108+40.4400 | -51.9200 | 5260.5443 | 260.6071 | -51.9200 | 63.7500 | | | 63.7500 | -0.020000 |
| F-7 | 108+50.8150 | -51.9200 | 5260.5571 | 260.6094 | -51.9200 | 74.1250 | | | 74.1250 | -0.020000 |
| F-8 | 108+61.1900 | -51.9200 | 5260.5523 | 260.5892 | -51.9200 | 84.5000 | | | 84.5000 | -0.020000 |
| F-9 | 108+71.5650 | -51.9200 | 5260.5298 | 260.5484 | -51.9200 | 94.8750 | | | 94.8750 | -0.020000 |
| BKBRG P2 | 108+81.9400 | -51.9200 | 5260.4897 | 260.4897 | -51.9200 | 105.2500 | -51.9200 | 0 00 00.00 | 105.2500 | -0.020000 |
| CL PIER 2 | 108+83.1900 | -51.9200 | 5260.4837 | | -51.9200 | 106.5000 | -51.9200 | 0 00 00.00 | 106.5000 | -0.020000 |
| AHBRG P2 | 108+84.4400 | -51.9200 | 5260.4774 | 260.4774 | -51.9200 | 107.7500 | -51.9200 | 0 00 00.00 | 107.7500 | -0.020000 |
| F-1 | 108+98.3150 | -51.9200 | 5260.3905 | 260.4584 | -51.9200 | 121.6250 | | | 121.6250 | -0.020000 |
| F-2 | 109+12.1900 | -51.9200 | 5260.2721 | 260.4034 | -51.9200 | 135.5000 | | | 135.5000 | -0.020000 |
| F-3 | 109+26.0650 | -51.9200 | 5260.1221 | 260.3049 | -51.9200 | 149.3750 | | | 149.3750 | -0.020000 |
| F-4 | 109+39.9400 | -51.9200 | 5259.9407 | 260.1573 | -51.9200 | 163.2500 | | | 163.2500 | -0.020000 |
| F-5 | 109+53.8150 | -51.9200 | 5259.7277 | 259.9572 | -51.9200 | 177.1250 | | | 177.1250 | -0.020000 |
| F-6 | 109+67.6900 | -51.9200 | 5259.4831 | 259.7030 | -51.9200 | 191.0000 | | | 191.0000 | -0.020000 |
| F-7 | 109+81.5650 | -51.9200 | 5259.2070 | 259.3956 | -51.9200 | 204.8750 | | | 204.8750 | -0.020000 |
| F-8 | 109+95.4400 | -51.9200 | 5258.8994 | 259.0374 | -51.9200 | 218.7500 | | | 218.7500 | -0.020000 |
| F-9 | 110+09.3150 | -51.9200 | 5258.5603 | 258.6331 | -51.9200 | 232.6250 | | | 232.6250 | -0.020000 |
| CL ABUT 3 | 110+23.1900 | -51.9200 | 5258.1896 | 258.1896 | -51.9200 | 246.5000 | -51.9200 | 0 00 00.00 | 246.5000 | -0.020000 |
| BF ABUT 3 | 110+24.6900 | -51.9200 | 5258.1476 | | -51.9200 | 248.0000 | -51.9200 | 0 00 00.00 | 248.0000 | -0.020000 |
| END APP3 | 110+32.6900 | -51.9200 | 5257.9188 | | -51.9200 | 256.0000 | -51.9200 | 0 00 00.00 | 256.0000 | -0.020000 |

CL GIRDER 4 — PARALLEL TO HORIZONTAL CONTROL — 0.250000 FEET BELOW FINISHED GRADE

| BENT LINE | STATION | OFFSET | ELEVATION | ELEV+DL | X | Y | BENT LNTH | SKEW | GIRDER LNTH | CRS-SLP |
|---|---|---|---|---|---|---|---|---|---|---|
| END APP1 | 107+56.6900 | -44.5000 | 5259.9440 | | -44.5000 | -20.0000 | -44.5000 | 0 00 00.00 | -20.0000 | -0.020000 |
| BF ABUT 1 | 107+76.6900 | -44.5000 | 5260.2272 | | -44.5000 | 0.0000 | -44.5000 | 0 00 00.00 | 0.0000 | -0.020000 |
| CL ABUT 1 | 107+78.1900 | -44.5000 | 5260.2458 | 260.2458 | -44.5000 | 1.5000 | -44.5000 | 0 00 00.00 | 1.5000 | -0.020000 |
| F-1 | 107+88.5650 | -44.5000 | 5260.3644 | 260.3858 | -44.5000 | 11.8750 | | | 11.8750 | -0.020000 |
| F-2 | 107+98.9400 | -44.5000 | 5260.4653 | 260.5060 | -44.5000 | 22.2500 | | | 22.2500 | -0.020000 |
| F-3 | 108+09.3150 | -44.5000 | 5260.5486 | 260.6042 | -44.5000 | 32.6250 | | | 32.6250 | -0.020000 |
| F-4 | 108+19.6900 | -44.5000 | 5260.6143 | 260.6789 | -44.5000 | 43.0000 | | | 43.0000 | -0.020000 |
| F-5 | 108+30.0650 | -44.5000 | 5260.6623 | 260.7294 | -44.5000 | 53.3750 | | | 53.3750 | -0.020000 |
| F-6 | 108+40.4400 | -44.5000 | 5260.6927 | 260.7555 | -44.5000 | 63.7500 | | | 63.7500 | -0.020000 |
| F-7 | 108+50.8150 | -44.5000 | 5260.7055 | 260.7578 | -44.5000 | 74.1250 | | | 74.1250 | -0.020000 |
| F-8 | 108+61.1900 | -44.5000 | 5260.7007 | 260.7376 | -44.5000 | 84.5000 | | | 84.5000 | -0.020000 |
| F-9 | 108+71.5650 | -44.5000 | 5260.6782 | 260.6968 | -44.5000 | 94.8750 | | | 94.8750 | -0.020000 |
| BKBRG P2 | 108+81.9400 | -44.5000 | 5260.6381 | 260.6381 | -44.5000 | 105.2500 | -44.5000 | 0 00 00.00 | 105.2500 | -0.020000 |
| CL PIER 2 | 108+83.1900 | -44.5000 | 5260.6321 | | -44.5000 | 106.5000 | -44.5000 | 0 00 00.00 | 106.5000 | -0.020000 |
| AHBRG P2 | 108+84.4400 | -44.5000 | 5260.6258 | 260.6258 | -44.5000 | 107.7500 | -44.5000 | 0 00 00.00 | 107.7500 | -0.020000 |
| F-1 | 108+98.3150 | -44.5000 | 5260.5389 | 260.6068 | -44.5000 | 121.6250 | | | 121.6250 | -0.020000 |
| F-2 | 109+12.1900 | -44.5000 | 5260.4205 | 260.5518 | -44.5000 | 135.5000 | | | 135.5000 | -0.020000 |
| F-3 | 109+26.0650 | -44.5000 | 5260.2705 | 260.4533 | -44.5000 | 149.3750 | | | 149.3750 | -0.020000 |
| F-4 | 109+39.9400 | -44.5000 | 5260.0891 | 260.3057 | -44.5000 | 163.2500 | | | 163.2500 | -0.020000 |
| F-5 | 109+53.8150 | -44.5000 | 5259.8761 | 260.1056 | -44.5000 | 177.1250 | | | 177.1250 | -0.020000 |
| F-6 | 109+67.6900 | -44.5000 | 5259.6315 | 259.8514 | -44.5000 | 191.0000 | | | 191.0000 | -0.020000 |
| F-7 | 109+81.5650 | -44.5000 | 5259.3554 | 259.5440 | -44.5000 | 204.8750 | | | 204.8750 | -0.020000 |
| F-8 | 109+95.4400 | -44.5000 | 5259.0478 | 259.1858 | -44.5000 | 218.7500 | | | 218.7500 | -0.020000 |
| F-9 | 110+09.3150 | -44.5000 | 5258.7087 | 258.7815 | -44.5000 | 232.6250 | | | 232.6250 | -0.020000 |
| CL ABUT 3 | 110+23.1900 | -44.5000 | 5258.3380 | 258.3380 | -44.5000 | 246.5000 | -44.5000 | 0 00 00.00 | 246.5000 | -0.020000 |
| BF ABUT 3 | 110+24.6900 | -44.5000 | 5258.2960 | | -44.5000 | 248.0000 | -44.5000 | 0 00 00.00 | 248.0000 | -0.020000 |
| END APP3 | 110+32.6900 | -44.5000 | 5258.0672 | | -44.5000 | 256.0000 | -44.5000 | 0 00 00.00 | 256.0000 | -0.020000 |

CL GIRDER 5 — PARALLEL TO HORIZONTAL CONTROL — 0.250000 FEET BELOW FINISHED GRADE

| BENT LINE | STATION | OFFSET | ELEVATION | ELEV+DL | X | Y | BENT LNTH | SKEW | GIRDER LNTH | CRS-SLP |
|---|---|---|---|---|---|---|---|---|---|---|
| END APP1 | 107+56.6900 | -37.0833 | 5260.0923 | | -37.0833 | -20.0000 | -37.0833 | 0 00 00.00 | -20.0000 | -0.020000 |
| BF ABUT 1 | 107+76.6900 | -37.0833 | 5260.3756 | | -37.0833 | 0.0000 | -37.0833 | 0 00 00.00 | 0.0000 | -0.020000 |
| CL ABUT 1 | 107+78.1900 | -37.0833 | 5260.3942 | 260.3942 | -37.0833 | 1.5000 | -37.0833 | 0 00 00.00 | 1.5000 | -0.020000 |
| F-1 | 107+88.5650 | -37.0833 | 5260.5127 | 260.5342 | -37.0833 | 11.8750 | | | 11.8750 | -0.020000 |
| F-2 | 107+98.9400 | -37.0833 | 5260.6137 | 260.6543 | -37.0833 | 22.2500 | | | 22.2500 | -0.020000 |
| F-3 | 108+09.3150 | -37.0833 | 5260.6970 | 260.7525 | -37.0833 | 32.6250 | | | 32.6250 | -0.020000 |
| F-4 | 108+19.6900 | -37.0833 | 5260.7626 | 260.8272 | -37.0833 | 43.0000 | | | 43.0000 | -0.020000 |
| F-5 | 108+30.0650 | -37.0833 | 5260.8107 | 260.8777 | -37.0833 | 53.3750 | | | 53.3750 | -0.020000 |
| F-6 | 108+40.4400 | -37.0833 | 5260.8411 | 260.9038 | -37.0833 | 63.7500 | | | 63.7500 | -0.020000 |
| F-7 | 108+50.8150 | -37.0833 | 5260.8539 | 260.9061 | -37.0833 | 74.1250 | | | 74.1250 | -0.020000 |
| F-8 | 108+61.1900 | -37.0833 | 5260.8490 | 260.8859 | -37.0833 | 84.5000 | | | 84.5000 | -0.020000 |
| F-9 | 108+71.5650 | -37.0833 | 5260.8265 | 260.8452 | -37.0833 | 94.8750 | | | 94.8750 | -0.020000 |
| BKBRG P2 | 108+81.9400 | -37.0833 | 5260.7864 | 260.7864 | -37.0833 | 105.2500 | -37.0833 | 0 00 00.00 | 105.2500 | -0.020000 |
| CL PIER 2 | 108+83.1900 | -37.0833 | 5260.7804 | | -37.0833 | 106.5000 | -37.0833 | 0 00 00.00 | 106.5000 | -0.020000 |
| AHBRG P2 | 108+84.4400 | -37.0833 | 5260.7741 | 260.7741 | -37.0833 | 107.7500 | -37.0833 | 0 00 00.00 | 107.7500 | -0.020000 |
| F-1 | 108+98.3150 | -37.0833 | 5260.6872 | 260.7551 | -37.0833 | 121.6250 | | | 121.6250 | -0.020000 |
| F-2 | 109+12.1900 | -37.0833 | 5260.5688 | 260.7002 | -37.0833 | 135.5000 | | | 135.5000 | -0.020000 |
| F-3 | 109+26.0650 | -37.0833 | 5260.4189 | 260.6016 | -37.0833 | 149.3750 | | | 149.3750 | -0.020000 |
| F-4 | 109+39.9400 | -37.0833 | 5260.2374 | 260.4540 | -37.0833 | 163.2500 | | | 163.2500 | -0.020000 |
| F-5 | 109+53.8150 | -37.0833 | 5260.0244 | 260.2539 | -37.0833 | 177.1250 | | | 177.1250 | -0.020000 |
| F-6 | 109+67.6900 | -37.0833 | 5259.7798 | 259.9998 | -37.0833 | 191.0000 | | | 191.0000 | -0.020000 |
| F-7 | 109+81.5650 | -37.0833 | 5259.5038 | 259.6923 | -37.0833 | 204.8750 | | | 204.8750 | -0.020000 |
| F-8 | 109+95.4400 | -37.0833 | 5259.1962 | 259.3341 | -37.0833 | 218.7500 | | | 218.7500 | -0.020000 |
| F-9 | 110+09.3150 | -37.0833 | 5258.8570 | 258.9299 | -37.0833 | 232.6250 | | | 232.6250 | -0.020000 |
| CL ABUT 3 | 110+23.1900 | -37.0833 | 5258.4863 | 258.4863 | -37.0833 | 246.5000 | -37.0833 | 0 00 00.00 | 246.5000 | -0.020000 |
| BF ABUT 3 | 110+24.6900 | -37.0833 | 5258.4444 | | -37.0833 | 248.0000 | -37.0833 | 0 00 00.00 | 248.0000 | -0.020000 |
| END APP3 | 110+32.6900 | -37.0833 | 5258.2155 | | -37.0833 | 256.0000 | -37.0833 | 0 00 00.00 | 256.0000 | -0.020000 |

CL GIRDER 6 — PARALLEL TO HORIZONTAL CONTROL — 0.250000 FEET BELOW FINISHED GRADE

| BENT LINE | STATION | OFFSET | ELEVATION | ELEV+DL | X | Y | BENT LNTH | SKEW | GIRDER LNTH | CRS-SLP |
|---|---|---|---|---|---|---|---|---|---|---|
| END APP1 | 107+56.6900 | -29.6667 | 5260.2407 | | -29.6667 | -20.0000 | -29.6667 | 0 00 00.00 | -20.0000 | -0.020000 |
| BF ABUT 1 | 107+76.6900 | -29.6667 | 5260.5239 | | -29.6667 | 0.0000 | -29.6667 | 0 00 00.00 | 0.0000 | -0.020000 |
| CL ABUT 1 | 107+78.1900 | -29.6667 | 5260.5425 | 260.5425 | -29.6667 | 1.5000 | -29.6667 | 0 00 00.00 | 1.5000 | -0.020000 |
| F-1 | 107+88.5650 | -29.6667 | 5260.6610 | 260.6825 | -29.6667 | 11.8750 | | | 11.8750 | -0.020000 |
| F-2 | 107+98.9400 | -29.6667 | 5260.7620 | 260.8027 | -29.6667 | 22.2500 | | | 22.2500 | -0.020000 |
| F-3 | 108+09.3150 | -29.6667 | 5260.8453 | 260.9009 | -29.6667 | 32.6250 | | | 32.6250 | -0.020000 |
| F-4 | 108+19.6900 | -29.6667 | 5260.9110 | 260.9756 | -29.6667 | 43.0000 | | | 43.0000 | -0.020000 |
| F-5 | 108+30.0650 | -29.6667 | 5260.9590 | 261.0260 | -29.6667 | 53.3750 | | | 53.3750 | -0.020000 |
| F-6 | 108+40.4400 | -29.6667 | 5260.9894 | 261.0521 | -29.6667 | 63.7500 | | | 63.7500 | -0.020000 |
| F-7 | 108+50.8150 | -29.6667 | 5261.0022 | 261.0545 | -29.6667 | 74.1250 | | | 74.1250 | -0.020000 |
| F-8 | 108+61.1900 | -29.6667 | 5260.9973 | 261.0343 | -29.6667 | 84.5000 | | | 84.5000 | -0.020000 |
| F-9 | 108+71.5650 | -29.6667 | 5260.9749 | 260.9935 | -29.6667 | 94.8750 | | | 94.8750 | -0.020000 |
| BKBRG P2 | 108+81.9400 | -29.6667 | 5260.9348 | 260.9348 | -29.6667 | 105.2500 | -29.6667 | 0 00 00.00 | 105.2500 | -0.020000 |
| CL PIER 2 | 108+83.1900 | -29.6667 | 5260.9287 | | -29.6667 | 106.5000 | -29.6667 | 0 00 00.00 | 106.5000 | -0.020000 |
| AHBRG P2 | 108+84.4400 | -29.6667 | 5260.9225 | 260.9225 | -29.6667 | 107.7500 | -29.6667 | 0 00 00.00 | 107.7500 | -0.020000 |
| F-1 | 108+98.3150 | -29.6667 | 5260.8356 | 260.9035 | -29.6667 | 121.6250 | | | 121.6250 | -0.020000 |
| F-2 | 109+12.1900 | -29.6667 | 5260.7172 | 260.8485 | -29.6667 | 135.5000 | | | 135.5000 | -0.020000 |
| F-3 | 109+26.0650 | -29.6667 | 5260.5672 | 260.7500 | -29.6667 | 149.3750 | | | 149.3750 | -0.020000 |
| F-4 | 109+39.9400 | -29.6667 | 5260.3857 | 260.6024 | -29.6667 | 163.2500 | | | 163.2500 | -0.020000 |
| F-5 | 109+53.8150 | -29.6667 | 5260.1727 | 260.4022 | -29.6667 | 177.1250 | | | 177.1250 | -0.020000 |
| F-6 | 109+67.6900 | -29.6667 | 5259.9282 | 260.1481 | -29.6667 | 191.0000 | | | 191.0000 | -0.020000 |
| F-7 | 109+81.5650 | -29.6667 | 5259.6521 | 259.8406 | -29.6667 | 204.8750 | | | 204.8750 | -0.020000 |
| F-8 | 109+95.4400 | -29.6667 | 5259.3445 | 259.4824 | -29.6667 | 218.7500 | | | 218.7500 | -0.020000 |
| F-9 | 110+09.3150 | -29.6667 | 5259.0053 | 259.0782 | -29.6667 | 232.6250 | | | 232.6250 | -0.020000 |
| CL ABUT 3 | 110+23.1900 | -29.6667 | 5258.6347 | 258.6347 | -29.6667 | 246.5000 | -29.6667 | 0 00 00.00 | 246.5000 | -0.020000 |
| BF ABUT 3 | 110+24.6900 | -29.6667 | 5258.5927 | | -29.6667 | 248.0000 | -29.6667 | 0 00 00.00 | 248.0000 | -0.020000 |
| END APP3 | 110+32.6900 | -29.6667 | 5258.3638 | | -29.6667 | 256.0000 | -29.6667 | 0 00 00.00 | 256.0000 | -0.020000 |

Note: Elevations are at top of concrete deck 3 Inches below Finished Grade.

Positive Roadway Cross Slope is Upwards from the Profile Grade Line.

These Stations, Coordinates, Offsets and Lengths define the layout of the structure in a two dimensional horizontal plane. Elevations define the final grade of the finished concrete deck. Fabrication of structural components through the direct use of this information is not intended or advisable.

| Design | | | Detail | | | Quantities | | |
|---|---|---|---|---|---|---|---|---|
| | INITIAL | DATE | | INITIAL | DATE | | INITIAL | DATE |
| Designed By | MM | 06/11 | Detailed By | SJF | 07/11 | Quantities By | RD | 06/11 |
| Checked By | LF | 05/11 | Checked By | MM | 07/11 | Checked By | MM/LF | 06/11 |

fussneckers 11:58:36 AM B:\0224\16628_Federal_6th\My Project\40-46 deck elevations.dgn

Print Date: 8/1/2011
File Name: 40-46 deck elevations.dgn
Horiz. Scale: None Vert. Scale: As Noted
Staff Bridge Branch - Unit 0224 Unit Leader: AJP

| Sheet Revisions | | |
|---|---|---|
| Date: | Comments | Init. |
| | | |
| | | |
| | | |

Colorado Department of Transportation
8833 South Wadsworth Court
Littleton, CO 80128
Phone: 303-972-9112 FAX: 303-972-9114
Region 6 TG

As Constructed
No Revisions:
Revised:
Void:

# BRIDGE DECK ELEVATIONS

Designer: M. Mohseni
Detailer: S. Fussnecker
Structure Numbers: F-16-XO
Sheet Subset: Bridge
Subset Sheets: B42 of 46

Project No./Code: C 088A-024
16628
Sheet Number

CL GIRDER 7 — PARALLEL TO HORIZONTAL CONTROL — 0.250000 FEET BELOW FINISHED GRADE

| BENT LINE | STATION | OFFSET | ELEVATION | ELEV+DL | X | Y | BENT LNTH | SKEW | GIRDER LNTH | CRS-SLP |
|---|---|---|---|---|---|---|---|---|---|---|
| END APP1 | 107+56.6900 | -22.2500 | 5260.3890 | | -22.2500 | -20.0000 | -22.2500 | 0 00 00.00 | -20.0000 | -0.020000 |
| BF ABUT 1 | 107+76.6900 | -22.2500 | 5260.6722 | | -22.2500 | 0.0000 | -22.2500 | 0 00 00.00 | 0.0000 | -0.020000 |
| CL ABUT 1 | 107+78.1900 | -22.2500 | 5260.6908 | 260.6908 | -22.2500 | 1.5000 | -22.2500 | 0 00 00.00 | 1.5000 | -0.020000 |
| F-1 | 107+88.5650 | -22.2500 | 5260.8094 | 260.8308 | -22.2500 | 11.8750 | | | 11.8750 | -0.020000 |
| F-2 | 107+98.9400 | -22.2500 | 5260.9103 | 260.9510 | -22.2500 | 22.2500 | | | 22.2500 | -0.020000 |
| F-3 | 108+09.3150 | -22.2500 | 5260.9936 | 261.0492 | -22.2500 | 32.6250 | | | 32.6250 | -0.020000 |
| F-4 | 108+19.6900 | -22.2500 | 5261.0593 | 261.1239 | -22.2500 | 43.0000 | | | 43.0000 | -0.020000 |
| F-5 | 108+30.0650 | -22.2500 | 5261.1073 | 261.1744 | -22.2500 | 53.3750 | | | 53.3750 | -0.020000 |
| F-6 | 108+40.4400 | -22.2500 | 5261.1377 | 261.2005 | -22.2500 | 63.7500 | | | 63.7500 | -0.020000 |
| F-7 | 108+50.8150 | -22.2500 | 5261.1505 | 261.2028 | -22.2500 | 74.1250 | | | 74.1250 | -0.020000 |
| F-8 | 108+61.1900 | -22.2500 | 5261.1457 | 261.1826 | -22.2500 | 84.5000 | | | 84.5000 | -0.020000 |
| F-9 | 108+71.5650 | -22.2500 | 5261.1232 | 261.1418 | -22.2500 | 94.8750 | | | 94.8750 | -0.020000 |
| BKBRG P2 | 108+81.9400 | -22.2500 | 5261.0831 | 261.0831 | -22.2500 | 105.2500 | -22.2500 | 0 00 00.00 | 105.2500 | -0.020000 |
| CL PIER 2 | 108+83.1900 | -22.2500 | 5261.0771 | | -22.2500 | 106.5000 | -22.2500 | 0 00 00.00 | 106.5000 | -0.020000 |
| AHBRG P2 | 108+84.4400 | -22.2500 | 5261.0708 | 261.0708 | -22.2500 | 107.7500 | -22.2500 | 0 00 00.00 | 107.7500 | -0.020000 |
| F-1 | 108+98.3150 | -22.2500 | 5260.9839 | 261.0518 | -22.2500 | 121.6250 | | | 121.6250 | -0.020000 |
| F-2 | 109+12.1900 | -22.2500 | 5260.8655 | 260.9968 | -22.2500 | 135.5000 | | | 135.5000 | -0.020000 |
| F-3 | 109+26.0650 | -22.2500 | 5260.7155 | 260.8983 | -22.2500 | 149.3750 | | | 149.3750 | -0.020000 |
| F-4 | 109+39.9400 | -22.2500 | 5260.5341 | 260.7507 | -22.2500 | 163.2500 | | | 163.2500 | -0.020000 |
| F-5 | 109+53.8150 | -22.2500 | 5260.3211 | 260.5506 | -22.2500 | 177.1250 | | | 177.1250 | -0.020000 |
| F-6 | 109+67.6900 | -22.2500 | 5260.0765 | 260.2964 | -22.2500 | 191.0000 | | | 191.0000 | -0.020000 |
| F-7 | 109+81.5650 | -22.2500 | 5259.8004 | 259.9890 | -22.2500 | 204.8750 | | | 204.8750 | -0.020000 |
| F-8 | 109+95.4400 | -22.2500 | 5259.4928 | 259.6308 | -22.2500 | 218.7500 | | | 218.7500 | -0.020000 |
| F-9 | 110+09.3150 | -22.2500 | 5259.1537 | 259.2265 | -22.2500 | 232.6250 | | | 232.6250 | -0.020000 |
| CL ABUT 3 | 110+23.1900 | -22.2500 | 5258.7830 | 258.7830 | -22.2500 | 246.5000 | -22.2500 | 0 00 00.00 | 246.5000 | -0.020000 |
| BF ABUT 3 | 110+24.6900 | -22.2500 | 5258.7410 | | -22.2500 | 248.0000 | -22.2500 | 0 00 00.00 | 248.0000 | -0.020000 |
| END APP3 | 110+32.6900 | -22.2500 | 5258.5122 | | -22.2500 | 256.0000 | -22.2500 | 0 00 00.00 | 256.0000 | -0.020000 |

CL GIRDER 8 — PARALLEL TO HORIZONTAL CONTROL — 0.250000 FEET BELOW FINISHED GRADE

| BENT LINE | STATION | OFFSET | ELEVATION | ELEV+DL | X | Y | BENT LNTH | SKEW | GIRDER LNTH | CRS-SLP |
|---|---|---|---|---|---|---|---|---|---|---|
| END APP1 | 107+56.6900 | -14.8300 | 5260.5374 | | -14.8300 | -20.0000 | -14.8300 | 0 00 00.00 | -20.0000 | -0.020000 |
| BF ABUT 1 | 107+76.6900 | -14.8300 | 5260.8206 | | -14.8300 | 0.0000 | -14.8300 | 0 00 00.00 | 0.0000 | -0.020000 |
| CL ABUT 1 | 107+78.1900 | -14.8300 | 5260.8392 | 260.8392 | -14.8300 | 1.5000 | -14.8300 | 0 00 00.00 | 1.5000 | -0.020000 |
| F-1 | 107+88.5650 | -14.8300 | 5260.9578 | 260.9792 | -14.8300 | 11.8750 | | | 11.8750 | -0.020000 |
| F-2 | 107+98.9400 | -14.8300 | 5261.0587 | 261.0994 | -14.8300 | 22.2500 | | | 22.2500 | -0.020000 |
| F-3 | 108+09.3150 | -14.8300 | 5261.1420 | 261.1976 | -14.8300 | 32.6250 | | | 32.6250 | -0.020000 |
| F-4 | 108+19.6900 | -14.8300 | 5261.2077 | 261.2723 | -14.8300 | 43.0000 | | | 43.0000 | -0.020000 |
| F-5 | 108+30.0650 | -14.8300 | 5261.2557 | 261.3228 | -14.8300 | 53.3750 | | | 53.3750 | -0.020000 |
| F-6 | 108+40.4400 | -14.8300 | 5261.2861 | 261.3489 | -14.8300 | 63.7500 | | | 63.7500 | -0.020000 |
| F-7 | 108+50.8150 | -14.8300 | 5261.2989 | 261.3512 | -14.8300 | 74.1250 | | | 74.1250 | -0.020000 |
| F-8 | 108+61.1900 | -14.8300 | 5261.2941 | 261.3310 | -14.8300 | 84.5000 | | | 84.5000 | -0.020000 |
| F-9 | 108+71.5650 | -14.8300 | 5261.2716 | 261.2902 | -14.8300 | 94.8750 | | | 94.8750 | -0.020000 |
| BKBRG P2 | 108+81.9400 | -14.8300 | 5261.2315 | 261.2315 | -14.8300 | 105.2500 | -14.8300 | 0 00 00.00 | 105.2500 | -0.020000 |
| CL PIER 2 | 108+83.1900 | -14.8300 | 5261.2255 | | -14.8300 | 106.5000 | -14.8300 | 0 00 00.00 | 106.5000 | -0.020000 |
| AHBRG P2 | 108+84.4400 | -14.8300 | 5261.2192 | 261.2192 | -14.8300 | 107.7500 | -14.8300 | 0 00 00.00 | 107.7500 | -0.020000 |
| F-1 | 108+98.3150 | -14.8300 | 5261.1323 | 261.2002 | -14.8300 | 121.6250 | | | 121.6250 | -0.020000 |
| F-2 | 109+12.1900 | -14.8300 | 5261.0139 | 261.1452 | -14.8300 | 135.5000 | | | 135.5000 | -0.020000 |
| F-3 | 109+26.0650 | -14.8300 | 5260.8639 | 261.0467 | -14.8300 | 149.3750 | | | 149.3750 | -0.020000 |
| F-4 | 109+39.9400 | -14.8300 | 5260.6825 | 260.8991 | -14.8300 | 163.2500 | | | 163.2500 | -0.020000 |
| F-5 | 109+53.8150 | -14.8300 | 5260.4695 | 260.6990 | -14.8300 | 177.1250 | | | 177.1250 | -0.020000 |
| F-6 | 109+67.6900 | -14.8300 | 5260.2249 | 260.4448 | -14.8300 | 191.0000 | | | 191.0000 | -0.020000 |
| F-7 | 109+81.5650 | -14.8300 | 5259.9488 | 260.1374 | -14.8300 | 204.8750 | | | 204.8750 | -0.020000 |
| F-8 | 109+95.4400 | -14.8300 | 5259.6412 | 259.7792 | -14.8300 | 218.7500 | | | 218.7500 | -0.020000 |
| F-9 | 110+09.3150 | -14.8300 | 5259.3021 | 259.3749 | -14.8300 | 232.6250 | | | 232.6250 | -0.020000 |
| CL ABUT 3 | 110+23.1900 | -14.8300 | 5258.9314 | 258.9314 | -14.8300 | 246.5000 | -14.8300 | 0 00 00.00 | 246.5000 | -0.020000 |
| BF ABUT 3 | 110+24.6900 | -14.8300 | 5258.8894 | | -14.8300 | 248.0000 | -14.8300 | 0 00 00.00 | 248.0000 | -0.020000 |
| END APP3 | 110+32.6900 | -14.8300 | 5258.6606 | | -14.8300 | 256.0000 | -14.8300 | 0 00 00.00 | 256.0000 | -0.020000 |

CL GIRDER 9 — PARALLEL TO HORIZONTAL CONTROL — 0.250000 FEET BELOW FINISHED GRADE

| BENT LINE | STATION | OFFSET | ELEVATION | ELEV+DL | X | Y | BENT LNTH | SKEW | GIRDER LNTH | CRS-SLP |
|---|---|---|---|---|---|---|---|---|---|---|
| END APP1 | 107+56.6900 | -7.4200 | 5260.6856 | | -7.4200 | -20.0000 | -7.4200 | 0 00 00.00 | -20.0000 | -0.020000 |
| BF ABUT 1 | 107+76.6900 | -7.4200 | 5260.9688 | | -7.4200 | 0.0000 | -7.4200 | 0 00 00.00 | 0.0000 | -0.020000 |
| CL ABUT 1 | 107+78.1900 | -7.4200 | 5260.9874 | 260.9874 | -7.4200 | 1.5000 | -7.4200 | 0 00 00.00 | 1.5000 | -0.020000 |
| F-1 | 107+88.5650 | -7.4200 | 5261.1060 | 261.1274 | -7.4200 | 11.8750 | | | 11.8750 | -0.020000 |
| F-2 | 107+98.9400 | -7.4200 | 5261.2069 | 261.2476 | -7.4200 | 22.2500 | | | 22.2500 | -0.020000 |
| F-3 | 108+09.3150 | -7.4200 | 5261.2902 | 261.3458 | -7.4200 | 32.6250 | | | 32.6250 | -0.020000 |
| F-4 | 108+19.6900 | -7.4200 | 5261.3559 | 261.4205 | -7.4200 | 43.0000 | | | 43.0000 | -0.020000 |
| F-5 | 108+30.0650 | -7.4200 | 5261.4039 | 261.4710 | -7.4200 | 53.3750 | | | 53.3750 | -0.020000 |
| F-6 | 108+40.4400 | -7.4200 | 5261.4343 | 261.4971 | -7.4200 | 63.7500 | | | 63.7500 | -0.020000 |
| F-7 | 108+50.8150 | -7.4200 | 5261.4471 | 261.4994 | -7.4200 | 74.1250 | | | 74.1250 | -0.020000 |
| F-8 | 108+61.1900 | -7.4200 | 5261.4423 | 261.4792 | -7.4200 | 84.5000 | | | 84.5000 | -0.020000 |
| F-9 | 108+71.5650 | -7.4200 | 5261.4198 | 261.4384 | -7.4200 | 94.8750 | | | 94.8750 | -0.020000 |
| BKBRG P2 | 108+81.9400 | -7.4200 | 5261.3797 | 261.3797 | -7.4200 | 105.2500 | -7.4200 | 0 00 00.00 | 105.2500 | -0.020000 |
| CL PIER 2 | 108+83.1900 | -7.4200 | 5261.3737 | | -7.4200 | 106.5000 | -7.4200 | 0 00 00.00 | 106.5000 | -0.020000 |
| AHBRG P2 | 108+84.4400 | -7.4200 | 5261.3674 | 261.3674 | -7.4200 | 107.7500 | -7.4200 | 0 00 00.00 | 107.7500 | -0.020000 |
| F-1 | 108+98.3150 | -7.4200 | 5261.2805 | 261.3484 | -7.4200 | 121.6250 | | | 121.6250 | -0.020000 |
| F-2 | 109+12.1900 | -7.4200 | 5261.1621 | 261.2934 | -7.4200 | 135.5000 | | | 135.5000 | -0.020000 |
| F-3 | 109+26.0650 | -7.4200 | 5261.0121 | 261.1949 | -7.4200 | 149.3750 | | | 149.3750 | -0.020000 |
| F-4 | 109+39.9400 | -7.4200 | 5260.8307 | 261.0473 | -7.4200 | 163.2500 | | | 163.2500 | -0.020000 |
| F-5 | 109+53.8150 | -7.4200 | 5260.6177 | 260.8472 | -7.4200 | 177.1250 | | | 177.1250 | -0.020000 |
| F-6 | 109+67.6900 | -7.4200 | 5260.3731 | 260.5930 | -7.4200 | 191.0000 | | | 191.0000 | -0.020000 |
| F-7 | 109+81.5650 | -7.4200 | 5260.0970 | 260.2856 | -7.4200 | 204.8750 | | | 204.8750 | -0.020000 |
| F-8 | 109+95.4400 | -7.4200 | 5259.7894 | 259.9274 | -7.4200 | 218.7500 | | | 218.7500 | -0.020000 |
| F-9 | 110+09.3150 | -7.4200 | 5259.4503 | 259.5231 | -7.4200 | 232.6250 | | | 232.6250 | -0.020000 |
| CL ABUT 3 | 110+23.1900 | -7.4200 | 5259.0796 | 259.0796 | -7.4200 | 246.5000 | -7.4200 | 0 00 00.00 | 246.5000 | -0.020000 |
| BF ABUT 3 | 110+24.6900 | -7.4200 | 5259.0376 | | -7.4200 | 248.0000 | -7.4200 | 0 00 00.00 | 248.0000 | -0.020000 |
| END APP3 | 110+32.6900 | -7.4200 | 5258.8088 | | -7.4200 | 256.0000 | -7.4200 | 0 00 00.00 | 256.0000 | -0.020000 |

CL GIRDER 10/ HCL — PARALLEL TO HORIZONTAL CONTROL — 0.250000 FEET BELOW FINISHED GRADE

| BENT LINE | STATION | OFFSET | ELEVATION | ELEV+DL | X | Y | BENT LNTH | SKEW | GIRDER LNTH | CRS-SLP |
|---|---|---|---|---|---|---|---|---|---|---|
| END APP1 | 107+56.6900 | 0.0000 | 5260.8340 | | 0.0000 | -20.0000 | 0.0000 | 0 00 00.00 | -20.0000 | +/-.020000 |
| BF ABUT 1 | 107+76.6900 | 0.0000 | 5261.1172 | | 0.0000 | 0.0000 | 0.0000 | 0 00 00.00 | 0.0000 | +/-.020000 |
| CL ABUT 1 | 107+78.1900 | 0.0000 | 5261.1358 | 261.1358 | 0.0000 | 1.5000 | 0.0000 | 0 00 00.00 | 1.5000 | +/-.020000 |
| F-1 | 107+88.5650 | 0.0000 | 5261.2544 | 261.2758 | 0.0000 | 11.8750 | | | 11.8750 | +/-.020000 |
| F-2 | 107+98.9400 | 0.0000 | 5261.3553 | 261.3960 | 0.0000 | 22.2500 | | | 22.2500 | +/-.020000 |
| F-3 | 108+09.3150 | 0.0000 | 5261.4386 | 261.4942 | 0.0000 | 32.6250 | | | 32.6250 | +/-.020000 |
| F-4 | 108+19.6900 | 0.0000 | 5261.5043 | 261.5689 | 0.0000 | 43.0000 | | | 43.0000 | +/-.020000 |
| F-5 | 108+30.0650 | 0.0000 | 5261.5523 | 261.6194 | 0.0000 | 53.3750 | | | 53.3750 | +/-.020000 |
| F-6 | 108+40.4400 | 0.0000 | 5261.5827 | 261.6455 | 0.0000 | 63.7500 | | | 63.7500 | +/-.020000 |
| F-7 | 108+50.8150 | 0.0000 | 5261.5955 | 261.6478 | 0.0000 | 74.1250 | | | 74.1250 | +/-.020000 |
| F-8 | 108+61.1900 | 0.0000 | 5261.5907 | 261.6276 | 0.0000 | 84.5000 | | | 84.5000 | +/-.020000 |
| F-9 | 108+71.5650 | 0.0000 | 5261.5682 | 261.5868 | 0.0000 | 94.8750 | | | 94.8750 | +/-.020000 |
| BKBRG P2 | 108+81.9400 | 0.0000 | 5261.5281 | 261.5281 | 0.0000 | 105.2500 | 0.0000 | 0 00 00.00 | 105.2500 | +/-.020000 |
| CL PIER 2 | 108+83.1900 | 0.0000 | 5261.5221 | | 0.0000 | 106.5000 | 0.0000 | 0 00 00.00 | 106.5000 | +/-.020000 |
| AHBRG P2 | 108+84.4400 | 0.0000 | 5261.5158 | 261.5158 | 0.0000 | 107.7500 | 0.0000 | 0 00 00.00 | 107.7500 | +/-.020000 |
| F-1 | 108+98.3150 | 0.0000 | 5261.4289 | 261.4968 | 0.0000 | 121.6250 | | | 121.6250 | +/-.020000 |
| F-2 | 109+12.1900 | 0.0000 | 5261.3105 | 261.4418 | 0.0000 | 135.5000 | | | 135.5000 | +/-.020000 |
| F-3 | 109+26.0650 | 0.0000 | 5261.1605 | 261.3433 | 0.0000 | 149.3750 | | | 149.3750 | +/-.020000 |
| F-4 | 109+39.9400 | 0.0000 | 5260.9791 | 261.1957 | 0.0000 | 163.2500 | | | 163.2500 | +/-.020000 |
| F-5 | 109+53.8150 | 0.0000 | 5260.7661 | 260.9956 | 0.0000 | 177.1250 | | | 177.1250 | +/-.020000 |
| F-6 | 109+67.6900 | 0.0000 | 5260.5215 | 260.7414 | 0.0000 | 191.0000 | | | 191.0000 | +/-.020000 |
| F-7 | 109+81.5650 | 0.0000 | 5260.2454 | 260.4340 | 0.0000 | 204.8750 | | | 204.8750 | +/-.020000 |
| F-8 | 109+95.4400 | 0.0000 | 5259.9378 | 260.0758 | 0.0000 | 218.7500 | | | 218.7500 | +/-.020000 |
| F-9 | 110+09.3150 | 0.0000 | 5259.5987 | 259.6715 | 0.0000 | 232.6250 | | | 232.6250 | +/-.020000 |
| CL ABUT 3 | 110+23.1900 | 0.0000 | 5259.2280 | 259.2280 | 0.0000 | 246.5000 | 0.0000 | 0 00 00.00 | 246.5000 | +/-.020000 |
| BF ABUT 3 | 110+24.6900 | 0.0000 | 5259.1860 | | 0.0000 | 248.0000 | 0.0000 | 0 00 00.00 | 248.0000 | +/-.020000 |
| END APP3 | 110+32.6900 | 0.0000 | 5258.9572 | | 0.0000 | 256.0000 | 0.0000 | 0 00 00.00 | 256.0000 | +/-.020000 |

Note: Elevations are at top of concrete deck 3 Inches below Finished Grade.

Positive Roadway Cross Slope is Upwards from the Profile Grade Line.

These Stations, Coordinates, Offsets and Lengths define the layout of the structure in a two dimensional horizontal plane. Elevations define the final grade of the finished concrete deck. Fabrication of structural components through the direct use of this information is not intended or advisable.

| Quantities | | |
|---|---|---|
| | INITIAL | DATE |
| Quantities By | RO | 06/11 |
| Checked By | MM/LF | 06/11 |

| Detail | | |
|---|---|---|
| | INITIAL | DATE |
| Detailed By | SJF | 07/11 |
| Checked By | MM | 07/11 |

| Design | | |
|---|---|---|
| | INITIAL | DATE |
| Designed By | MM | 06/11 |
| Checked By | LF | 05/11 |

fussneckers 11:58:39 AM B:\0224\16628_Federal_6th\My Project\40-46 deck elevations.dgn

Print Date: 8/1/2011
File Name: 40-46 deck elevations.dgn
Horiz. Scale: None Vert. Scale: As Noted
Staff Bridge Branch - Unit 0224 Unit Leader: AJP

| Sheet Revisions | | |
|---|---|---|
| Date: | Comments | Init. |
| | | |
| | | |
| | | |
| | | |

Colorado Department of Transportation
DOT DEPARTMENT OF TRANSPORTATION
8833 South Wadsworth Court
Littleton, CO 80128
Phone: 303-972-9112 FAX: 303-972-9114
Region 6 TG

As Constructed
No Revisions:
Revised:
Void:

BRIDGE DECK ELEVATIONS

Designer: M. Mohseni
Detailer: S. Fussnecker
Sheet Subset: Bridge
Structure Numbers: F-16-XO
Subset Sheets: B43 of 46

Project No./Code
C 088A-024
16628
Sheet Number

CL GIRDER 9 — PARALLEL TO HORIZONTAL CONTROL — 0.250000 FEET BELOW FINISHED GRADE

| BENT LINE | STATION | OFFSET | ELEVATION | ELEV+DL | X | Y | BENT LNTH | SKEW | GIRDER LNTH | CRS-SLP |
|---|---|---|---|---|---|---|---|---|---|---|
| END APP1 | 107+56.6900 | -7.4200 | 5260.6856 | | -7.4200 | -20.0000 | -7.4200 | 0 00 00.00 | -20.0000 | -0.020000 |
| BF ABUT 1 | 107+76.6900 | -7.4200 | 5260.9688 | | -7.4200 | 0.0000 | -7.4200 | 0 00 00.00 | 0.0000 | -0.020000 |
| CL ABUT 1 | 107+78.1900 | -7.4200 | 5260.9874 | 260.9874 | -7.4200 | 1.5000 | -7.4200 | 0 00 00.00 | 1.5000 | -0.020000 |
| F-1 | 107+88.5650 | -7.4200 | 5261.1060 | 261.1274 | -7.4200 | 11.8750 | | | 11.8750 | -0.020000 |
| F-2 | 107+98.9400 | -7.4200 | 5261.2069 | 261.2476 | -7.4200 | 22.2500 | | | 22.2500 | -0.020000 |
| F-3 | 108+09.3150 | -7.4200 | 5261.2902 | 261.3458 | -7.4200 | 32.6250 | | | 32.6250 | -0.020000 |
| F-4 | 108+19.6900 | -7.4200 | 5261.3559 | 261.4205 | -7.4200 | 43.0000 | | | 43.0000 | -0.020000 |
| F-5 | 108+30.0650 | -7.4200 | 5261.4039 | 261.4710 | -7.4200 | 53.3750 | | | 53.3750 | -0.020000 |
| F-6 | 108+40.4400 | -7.4200 | 5261.4343 | 261.4971 | -7.4200 | 63.7500 | | | 63.7500 | -0.020000 |
| F-7 | 108+50.8150 | -7.4200 | 5261.4471 | 261.4994 | -7.4200 | 74.1250 | | | 74.1250 | -0.020000 |
| F-8 | 108+61.1900 | -7.4200 | 5261.4423 | 261.4792 | -7.4200 | 84.5000 | | | 84.5000 | -0.020000 |
| F-9 | 108+71.5650 | -7.4200 | 5261.4198 | 261.4384 | -7.4200 | 94.8750 | | | 94.8750 | -0.020000 |
| BKBRG P2 | 108+81.9400 | -7.4200 | 5261.3797 | 261.3797 | -7.4200 | 105.2500 | -7.4200 | 0 00 00.00 | 105.2500 | -0.020000 |
| CL PIER 2 | 108+83.1900 | -7.4200 | 5261.3737 | | -7.4200 | 106.5000 | -7.4200 | 0 00 00.00 | 106.5000 | -0.020000 |
| AHBRG P2 | 108+84.4400 | -7.4200 | 5261.3674 | 261.3674 | -7.4200 | 107.7500 | -7.4200 | 0 00 00.00 | 107.7500 | -0.020000 |
| F-1 | 108+98.3150 | -7.4200 | 5261.2805 | 261.3484 | -7.4200 | 121.6250 | | | 121.6250 | -0.020000 |
| F-2 | 109+12.1900 | -7.4200 | 5261.1621 | 261.2934 | -7.4200 | 135.5000 | | | 135.5000 | -0.020000 |
| F-3 | 109+26.0650 | -7.4200 | 5261.0121 | 261.1949 | -7.4200 | 149.3750 | | | 149.3750 | -0.020000 |
| F-4 | 109+39.9400 | -7.4200 | 5260.8307 | 261.0473 | -7.4200 | 163.2500 | | | 163.2500 | -0.020000 |
| F-5 | 109+53.8150 | -7.4200 | 5260.6177 | 260.8472 | -7.4200 | 177.1250 | | | 177.1250 | -0.020000 |
| F-6 | 109+67.6900 | -7.4200 | 5260.3731 | 260.5930 | -7.4200 | 191.0000 | | | 191.0000 | -0.020000 |
| F-7 | 109+81.5650 | -7.4200 | 5260.0970 | 260.2856 | -7.4200 | 204.8750 | | | 204.8750 | -0.020000 |
| F-8 | 109+95.4400 | -7.4200 | 5259.7894 | 259.9274 | -7.4200 | 218.7500 | | | 218.7500 | -0.020000 |
| F-9 | 110+09.3150 | -7.4200 | 5259.4503 | 259.5231 | -7.4200 | 232.6250 | | | 232.6250 | -0.020000 |
| CL ABUT 3 | 110+23.1900 | -7.4200 | 5259.0796 | 259.0796 | -7.4200 | 246.5000 | -7.4200 | 0 00 00.00 | 246.5000 | -0.020000 |
| BF ABUT 3 | 110+24.6900 | -7.4200 | 5259.0376 | | -7.4200 | 248.0000 | -7.4200 | 0 00 00.00 | 248.0000 | -0.020000 |
| END APP3 | 110+32.6900 | -7.4200 | 5258.8088 | | -7.4200 | 256.0000 | -7.4200 | 0 00 00.00 | 256.0000 | -0.020000 |

CL GIRDER 10/ HCL — PARALLEL TO HORIZONTAL CONTROL — 0.250000 FEET BELOW FINISHED GRADE

| BENT LINE | STATION | OFFSET | ELEVATION | ELEV+DL | X | Y | BENT LNTH | SKEW | GIRDER LNTH | CRS-SLP |
|---|---|---|---|---|---|---|---|---|---|---|
| END APP1 | 107+56.6900 | 0.0000 | 5260.8340 | | 0.0000 | -20.0000 | 0.0000 | 0 00 00.00 | -20.0000 | +/-.020000 |
| BF ABUT 1 | 107+76.6900 | 0.0000 | 5261.1172 | | 0.0000 | 0.0000 | 0.0000 | 0 00 00.00 | 0.0000 | +/-.020000 |
| CL ABUT 1 | 107+78.1900 | 0.0000 | 5261.1358 | 261.1358 | 0.0000 | 1.5000 | 0.0000 | 0 00 00.00 | 1.5000 | +/-.020000 |
| F-1 | 107+88.5650 | 0.0000 | 5261.2544 | 261.2758 | 0.0000 | 11.8750 | | | 11.8750 | +/-.020000 |
| F-2 | 107+98.9400 | 0.0000 | 5261.3553 | 261.3960 | 0.0000 | 22.2500 | | | 22.2500 | +/-.020000 |
| F-3 | 108+09.3150 | 0.0000 | 5261.4386 | 261.4942 | 0.0000 | 32.6250 | | | 32.6250 | +/-.020000 |
| F-4 | 108+19.6900 | 0.0000 | 5261.5043 | 261.5689 | 0.0000 | 43.0000 | | | 43.0000 | +/-.020000 |
| F-5 | 108+30.0650 | 0.0000 | 5261.5523 | 261.6194 | 0.0000 | 53.3750 | | | 53.3750 | +/-.020000 |
| F-6 | 108+40.4400 | 0.0000 | 5261.5827 | 261.6455 | 0.0000 | 63.7500 | | | 63.7500 | +/-.020000 |
| F-7 | 108+50.8150 | 0.0000 | 5261.5955 | 261.6478 | 0.0000 | 74.1250 | | | 74.1250 | +/-.020000 |
| F-8 | 108+61.1900 | 0.0000 | 5261.5907 | 261.6276 | 0.0000 | 84.5000 | | | 84.5000 | +/-.020000 |
| F-9 | 108+71.5650 | 0.0000 | 5261.5682 | 261.5868 | 0.0000 | 94.8750 | | | 94.8750 | +/-.020000 |
| BKBRG P2 | 108+81.9400 | 0.0000 | 5261.5281 | 261.5281 | 0.0000 | 105.2500 | 0.0000 | 0 00 00.00 | 105.2500 | +/-.020000 |
| CL PIER 2 | 108+83.1900 | 0.0000 | 5261.5221 | | 0.0000 | 106.5000 | 0.0000 | 0 00 00.00 | 106.5000 | +/-.020000 |
| AHBRG P2 | 108+84.4400 | 0.0000 | 5261.5158 | 261.5158 | 0.0000 | 107.7500 | 0.0000 | 0 00 00.00 | 107.7500 | +/-.020000 |
| F-1 | 108+98.3150 | 0.0000 | 5261.4289 | 261.4968 | 0.0000 | 121.6250 | | | 121.6250 | +/-.020000 |
| F-2 | 109+12.1900 | 0.0000 | 5261.3105 | 261.4418 | 0.0000 | 135.5000 | | | 135.5000 | +/-.020000 |
| F-3 | 109+26.0650 | 0.0000 | 5261.1605 | 261.3433 | 0.0000 | 149.3750 | | | 149.3750 | +/-.020000 |
| F-4 | 109+39.9400 | 0.0000 | 5260.9791 | 261.1957 | 0.0000 | 163.2500 | | | 163.2500 | +/-.020000 |
| F-5 | 109+53.8150 | 0.0000 | 5260.7661 | 260.9956 | 0.0000 | 177.1250 | | | 177.1250 | +/-.020000 |
| F-6 | 109+67.6900 | 0.0000 | 5260.5215 | 260.7414 | 0.0000 | 191.0000 | | | 191.0000 | +/-.020000 |
| F-7 | 109+81.5650 | 0.0000 | 5260.2454 | 260.4340 | 0.0000 | 204.8750 | | | 204.8750 | +/-.020000 |
| F-8 | 109+95.4400 | 0.0000 | 5259.9378 | 260.0758 | 0.0000 | 218.7500 | | | 218.7500 | +/-.020000 |
| F-9 | 110+09.3150 | 0.0000 | 5259.5987 | 259.6715 | 0.0000 | 232.6250 | | | 232.6250 | +/-.020000 |
| CL ABUT 3 | 110+23.1900 | 0.0000 | 5259.2280 | 259.2280 | 0.0000 | 246.5000 | 0.0000 | 0 00 00.00 | 246.5000 | +/-.020000 |
| BF ABUT 3 | 110+24.6900 | 0.0000 | 5259.1860 | | 0.0000 | 248.0000 | 0.0000 | 0 00 00.00 | 248.0000 | +/-.020000 |
| END APP3 | 110+32.6900 | 0.0000 | 5258.9572 | | 0.0000 | 256.0000 | 0.0000 | 0 00 00.00 | 256.0000 | +/-.020000 |

CL GIRDER 13 — PARALLEL TO HORIZONTAL CONTROL — 0.250000 FEET BELOW FINISHED GRADE

| BENT LINE | STATION | OFFSET | ELEVATION | ELEV+DL | X | Y | BENT LNTH | SKEW | GIRDER LNTH | CRS-SLP |
|---|---|---|---|---|---|---|---|---|---|---|
| END APP1 | 107+56.6900 | 22.2500 | 5261.2790 | | 22.2500 | -20.0000 | 22.2500 | 0 00 00.00 | -20.0000 | +0.020000 |
| BF ABUT 1 | 107+76.6900 | 22.2500 | 5261.5622 | | 22.2500 | 0.0000 | 22.2500 | 0 00 00.00 | 0.0000 | +0.020000 |
| CL ABUT 1 | 107+78.1900 | 22.2500 | 5261.5808 | 261.5808 | 22.2500 | 1.5000 | 22.2500 | 0 00 00.00 | 1.5000 | +0.020000 |
| F-1 | 107+88.5650 | 22.2500 | 5261.6994 | 261.7208 | 22.2500 | 11.8750 | | | 11.8750 | +0.020000 |
| F-2 | 107+98.9400 | 22.2500 | 5261.8003 | 261.8410 | 22.2500 | 22.2500 | | | 22.2500 | +0.020000 |
| F-3 | 108+09.3150 | 22.2500 | 5261.8836 | 261.9392 | 22.2500 | 32.6250 | | | 32.6250 | +0.020000 |
| F-4 | 108+19.6900 | 22.2500 | 5261.9493 | 262.0139 | 22.2500 | 43.0000 | | | 43.0000 | +0.020000 |
| F-5 | 108+30.0650 | 22.2500 | 5261.9973 | 262.0644 | 22.2500 | 53.3750 | | | 53.3750 | +0.020000 |
| F-6 | 108+40.4400 | 22.2500 | 5262.0277 | 262.0905 | 22.2500 | 63.7500 | | | 63.7500 | +0.020000 |
| F-7 | 108+50.8150 | 22.2500 | 5262.0405 | 262.0928 | 22.2500 | 74.1250 | | | 74.1250 | +0.020000 |
| F-8 | 108+61.1900 | 22.2500 | 5262.0357 | 262.0726 | 22.2500 | 84.5000 | | | 84.5000 | +0.020000 |
| F-9 | 108+71.5650 | 22.2500 | 5262.0132 | 262.0318 | 22.2500 | 94.8750 | | | 94.8750 | +0.020000 |
| BKBRG P2 | 108+81.9400 | 22.2500 | 5261.9731 | 261.9731 | 22.2500 | 105.2500 | 22.2500 | 0 00 00.00 | 105.2500 | +0.020000 |
| CL PIER 2 | 108+83.1900 | 22.2500 | 5261.9671 | | 22.2500 | 106.5000 | 22.2500 | 0 00 00.00 | 106.5000 | +0.020000 |
| AHBRG P2 | 108+84.4400 | 22.2500 | 5261.9608 | 261.9608 | 22.2500 | 107.7500 | 22.2500 | 0 00 00.00 | 107.7500 | +0.020000 |
| F-1 | 108+98.3150 | 22.2500 | 5261.8739 | 261.9418 | 22.2500 | 121.6250 | | | 121.6250 | +0.020000 |
| F-2 | 109+12.1900 | 22.2500 | 5261.7555 | 261.8868 | 22.2500 | 135.5000 | | | 135.5000 | +0.020000 |
| F-3 | 109+26.0650 | 22.2500 | 5261.6055 | 261.7883 | 22.2500 | 149.3750 | | | 149.3750 | +0.020000 |
| F-4 | 109+39.9400 | 22.2500 | 5261.4241 | 261.6407 | 22.2500 | 163.2500 | | | 163.2500 | +0.020000 |
| F-5 | 109+53.8150 | 22.2500 | 5261.2111 | 261.4406 | 22.2500 | 177.1250 | | | 177.1250 | +0.020000 |
| F-6 | 109+67.6900 | 22.2500 | 5260.9665 | 261.1864 | 22.2500 | 191.0000 | | | 191.0000 | +0.020000 |
| F-7 | 109+81.5650 | 22.2500 | 5260.6904 | 260.8790 | 22.2500 | 204.8750 | | | 204.8750 | +0.020000 |
| F-8 | 109+95.4400 | 22.2500 | 5260.3828 | 260.5208 | 22.2500 | 218.7500 | | | 218.7500 | +0.020000 |
| F-9 | 110+09.3150 | 22.2500 | 5260.0437 | 260.1165 | 22.2500 | 232.6250 | | | 232.6250 | +0.020000 |
| CL ABUT 3 | 110+23.1900 | 22.2500 | 5259.6730 | 259.6730 | 22.2500 | 246.5000 | 22.2500 | 0 00 00.00 | 246.5000 | +0.020000 |
| BF ABUT 3 | 110+24.6900 | 22.2500 | 5259.6310 | | 22.2500 | 248.0000 | 22.2500 | 0 00 00.00 | 248.0000 | +0.020000 |
| END APP3 | 110+32.6900 | 22.2500 | 5259.4022 | | 22.2500 | 256.0000 | 22.2500 | 0 00 00.00 | 256.0000 | +0.020000 |

CL GIRDER 14 — PARALLEL TO HORIZONTAL CONTROL — 0.250000 FEET BELOW FINISHED GRADE

| BENT LINE | STATION | OFFSET | ELEVATION | ELEV+DL | X | Y | BENT LNTH | SKEW | GIRDER LNTH | CRS-SLP |
|---|---|---|---|---|---|---|---|---|---|---|
| END APP1 | 107+56.6900 | 29.6660 | 5261.4273 | | 29.6660 | -20.0000 | 29.6660 | 0 00 00.00 | -20.0000 | +0.020000 |
| BF ABUT 1 | 107+76.6900 | 29.6660 | 5261.7105 | | 29.6660 | 0.0000 | 29.6660 | 0 00 00.00 | 0.0000 | +0.020000 |
| CL ABUT 1 | 107+78.1900 | 29.6660 | 5261.7291 | 261.7291 | 29.6660 | 1.5000 | 29.6660 | 0 00 00.00 | 1.5000 | +0.020000 |
| F-1 | 107+88.5650 | 29.6660 | 5261.8477 | 261.8692 | 29.6660 | 11.8750 | | | 11.8750 | +0.020000 |
| F-2 | 107+98.9400 | 29.6660 | 5261.9486 | 261.9893 | 29.6660 | 22.2500 | | | 22.2500 | +0.020000 |
| F-3 | 108+09.3150 | 29.6660 | 5262.0319 | 262.0875 | 29.6660 | 32.6250 | | | 32.6250 | +0.020000 |
| F-4 | 108+19.6900 | 29.6660 | 5262.0976 | 262.1622 | 29.6660 | 43.0000 | | | 43.0000 | +0.020000 |
| F-5 | 108+30.0650 | 29.6660 | 5262.1457 | 262.2127 | 29.6660 | 53.3750 | | | 53.3750 | +0.020000 |
| F-6 | 108+40.4400 | 29.6660 | 5262.1761 | 262.2388 | 29.6660 | 63.7500 | | | 63.7500 | +0.020000 |
| F-7 | 108+50.8150 | 29.6660 | 5262.1888 | 262.2411 | 29.6660 | 74.1250 | | | 74.1250 | +0.020000 |
| F-8 | 108+61.1900 | 29.6660 | 5262.1840 | 262.2209 | 29.6660 | 84.5000 | | | 84.5000 | +0.020000 |
| F-9 | 108+71.5650 | 29.6660 | 5262.1615 | 262.1801 | 29.6660 | 94.8750 | | | 94.8750 | +0.020000 |
| BKBRG P2 | 108+81.9400 | 29.6660 | 5262.1214 | 262.1214 | 29.6660 | 105.2500 | 29.6660 | 0 00 00.00 | 105.2500 | +0.020000 |
| CL PIER 2 | 108+83.1900 | 29.6660 | 5262.1154 | | 29.6660 | 106.5000 | 29.6660 | 0 00 00.00 | 106.5000 | +0.020000 |
| AHBRG P2 | 108+84.4400 | 29.6660 | 5262.1091 | 262.1091 | 29.6660 | 107.7500 | 29.6660 | 0 00 00.00 | 107.7500 | +0.020000 |
| F-1 | 108+98.3150 | 29.6660 | 5262.0222 | 262.0901 | 29.6660 | 121.6250 | | | 121.6250 | +0.020000 |
| F-2 | 109+12.1900 | 29.6660 | 5261.9038 | 262.0352 | 29.6660 | 135.5000 | | | 135.5000 | +0.020000 |
| F-3 | 109+26.0650 | 29.6660 | 5261.7539 | 261.9366 | 29.6660 | 149.3750 | | | 149.3750 | +0.020000 |
| F-4 | 109+39.9400 | 29.6660 | 5261.5724 | 261.7890 | 29.6660 | 163.2500 | | | 163.2500 | +0.020000 |
| F-5 | 109+53.8150 | 29.6660 | 5261.3594 | 261.5889 | 29.6660 | 177.1250 | | | 177.1250 | +0.020000 |
| F-6 | 109+67.6900 | 29.6660 | 5261.1148 | 261.3348 | 29.6660 | 191.0000 | | | 191.0000 | +0.020000 |
| F-7 | 109+81.5650 | 29.6660 | 5260.8388 | 261.0273 | 29.6660 | 204.8750 | | | 204.8750 | +0.020000 |
| F-8 | 109+95.4400 | 29.6660 | 5260.5311 | 260.6691 | 29.6660 | 218.7500 | | | 218.7500 | +0.020000 |
| F-9 | 110+09.3150 | 29.6660 | 5260.1920 | 260.2648 | 29.6660 | 232.6250 | | | 232.6250 | +0.020000 |
| CL ABUT 3 | 110+23.1900 | 29.6660 | 5259.8213 | 259.8213 | 29.6660 | 246.5000 | 29.6660 | 0 00 00.00 | 246.5000 | +0.020000 |
| BF ABUT 3 | 110+24.6900 | 29.6660 | 5259.7794 | | 29.6660 | 248.0000 | 29.6660 | 0 00 00.00 | 248.0000 | +0.020000 |
| END APP3 | 110+32.6900 | 29.6660 | 5259.5505 | | 29.6660 | 256.0000 | 29.6660 | 0 00 00.00 | 256.0000 | +0.020000 |

Note: Elevations are at top of concrete deck 3 Inches below Finished Grade.

Positive Roadway Cross Slope is Upwards from the Profile Grade Line.

These Stations, Coordinates, Offsets and Lengths define the layout of the structure in a two dimensional horizontal plane. Elevations define the final grade of the finished concrete deck. Fabrication of structural components through the direct use of this information is not intended or advisable.

| Quantities | INITIAL | DATE |
|---|---|---|
| Quantities By | RO | 06/11 |
| Checked By | MM/LF | 06/11 |

| Detail | INITIAL | DATE |
|---|---|---|
| Detailed By | SJF | 07/11 |
| Checked By | MM | 07/11 |

| Design | INITIAL | DATE |
|---|---|---|
| Designed By | MM | 06/11 |
| Checked By | LF | 05/11 |

fussneckers 11:58:42 AM B:\0224\16628_Federal_6th\My Project\40-46 deck elevations.dgn

Print Date: 8/1/2011
File Name: 40-46 deck elevations.dgn
Horiz. Scale: None Vert. Scale: As Noted
Staff Bridge Branch - Unit 0224 Unit Leader: AJP

| Sheet Revisions | | |
|---|---|---|
| Date: | Comments | Init. |
| | | |
| | | |
| | | |
| | | |

Colorado Department of Transportation
DOT — DEPARTMENT OF TRANSPORTATION
8833 South Wadsworth Court
Littleton, CO 80128
Phone: 303-972-9112 FAX: 303-972-9114
Region 6 TG

As Constructed
No Revisions:
Revised:
Void:

BRIDGE DECK ELEVATIONS

Designer: M. Mohseni
Detailer: S. Fussnecker
Sheet Subset: Bridge
Structure Numbers: F-16-XO
Subset Sheets: B44 of 46

Project No./Code
C 088A-024
16628
Sheet Number

CL GIRDER 15 — PARALLEL TO HORIZONTAL CONTROL — 0.250000 FEET BELOW FINISHED GRADE

| BENT LINE | STATION | OFFSET | ELEVATION | ELEV+DL | X | Y | BENT LNTH | SKEW | GIRDER LNTH | CRS-SLP |
|---|---|---|---|---|---|---|---|---|---|---|
| END APP1 | 107+56.6900 | 37.0830 | 5261.5757 | | 37.0830 | -20.0000 | 37.0830 | 0 00 00.00 | -20.0000 | +0.020000 |
| BF ABUT 1 | 107+76.6900 | 37.0830 | 5261.8589 | | 37.0830 | 0.0000 | 37.0830 | 0 00 00.00 | 0.0000 | +0.020000 |
| CL ABUT 1 | 107+78.1900 | 37.0830 | 5261.8775 | 261.8775 | 37.0830 | 1.5000 | 37.0830 | 0 00 00.00 | 1.5000 | +0.020000 |
| F-1 | 107+88.5650 | 37.0830 | 5261.9960 | 262.0175 | 37.0830 | 11.8750 | | | 11.8750 | +0.020000 |
| F-2 | 107+98.9400 | 37.0830 | 5262.0970 | 262.1377 | 37.0830 | 22.2500 | | | 22.2500 | +0.020000 |
| F-3 | 108+09.3150 | 37.0830 | 5262.1803 | 262.2358 | 37.0830 | 32.6250 | | | 32.6250 | +0.020000 |
| F-4 | 108+19.6900 | 37.0830 | 5262.2460 | 262.3106 | 37.0830 | 43.0000 | | | 43.0000 | +0.020000 |
| F-5 | 108+30.0650 | 37.0830 | 5262.2940 | 262.3610 | 37.0830 | 53.3750 | | | 53.3750 | +0.020000 |
| F-6 | 108+40.4400 | 37.0830 | 5262.3244 | 262.3871 | 37.0830 | 63.7500 | | | 63.7500 | +0.020000 |
| F-7 | 108+50.8150 | 37.0830 | 5262.3372 | 262.3895 | 37.0830 | 74.1250 | | | 74.1250 | +0.020000 |
| F-8 | 108+61.1900 | 37.0830 | 5262.3323 | 262.3693 | 37.0830 | 84.5000 | | | 84.5000 | +0.020000 |
| F-9 | 108+71.5650 | 37.0830 | 5262.3099 | 262.3285 | 37.0830 | 94.8750 | | | 94.8750 | +0.020000 |
| BKBRG P2 | 108+81.9400 | 37.0830 | 5262.2697 | 262.2697 | 37.0830 | 105.2500 | 37.0830 | 0 00 00.00 | 105.2500 | +0.020000 |
| CL PIER 2 | 108+83.1900 | 37.0830 | 5262.2637 | | 37.0830 | 106.5000 | 37.0830 | 0 00 00.00 | 106.5000 | +0.020000 |
| AHBRG P2 | 108+84.4400 | 37.0830 | 5262.2574 | 262.2574 | 37.0830 | 107.7500 | 37.0830 | 0 00 00.00 | 107.7500 | +0.020000 |
| F-1 | 108+98.3150 | 37.0830 | 5262.1706 | 262.2385 | 37.0830 | 121.6250 | | | 121.6250 | +0.020000 |
| F-2 | 109+12.1900 | 37.0830 | 5262.0522 | 262.1835 | 37.0830 | 135.5000 | | | 135.5000 | +0.020000 |
| F-3 | 109+26.0650 | 37.0830 | 5261.9022 | 262.0850 | 37.0830 | 149.3750 | | | 149.3750 | +0.020000 |
| F-4 | 109+39.9400 | 37.0830 | 5261.7207 | 261.9374 | 37.0830 | 163.2500 | | | 163.2500 | +0.020000 |
| F-5 | 109+53.8150 | 37.0830 | 5261.5077 | 261.7372 | 37.0830 | 177.1250 | | | 177.1250 | +0.020000 |
| F-6 | 109+67.6900 | 37.0830 | 5261.2632 | 261.4831 | 37.0830 | 191.0000 | | | 191.0000 | +0.020000 |
| F-7 | 109+81.5650 | 37.0830 | 5260.9871 | 261.1756 | 37.0830 | 204.8750 | | | 204.8750 | +0.020000 |
| F-8 | 109+95.4400 | 37.0830 | 5260.6795 | 260.8174 | 37.0830 | 218.7500 | | | 218.7500 | +0.020000 |
| F-9 | 110+09.3150 | 37.0830 | 5260.3403 | 260.4132 | 37.0830 | 232.6250 | | | 232.6250 | +0.020000 |
| CL ABUT 3 | 110+23.1900 | 37.0830 | 5259.9697 | 259.9697 | 37.0830 | 246.5000 | 37.0830 | 0 00 00.00 | 246.5000 | +0.020000 |
| BF ABUT 3 | 110+24.6900 | 37.0830 | 5259.9277 | | 37.0830 | 248.0000 | 37.0830 | 0 00 00.00 | 248.0000 | +0.020000 |
| END APP3 | 110+32.6900 | 37.0830 | 5259.6988 | | 37.0830 | 256.0000 | 37.0830 | 0 00 00.00 | 256.0000 | +0.020000 |

CL GIRDER 16 — PARALLEL TO HORIZONTAL CONTROL — 0.250000 FEET BELOW FINISHED GRADE

| BENT LINE | STATION | OFFSET | ELEVATION | ELEV+DL | X | Y | BENT LNTH | SKEW | GIRDER LNTH | CRS-SLP |
|---|---|---|---|---|---|---|---|---|---|---|
| END APP1 | 107+56.6900 | 44.5000 | 5261.7240 | | 44.5000 | -20.0000 | 44.5000 | 0 00 00.00 | -20.0000 | +0.020000 |
| BF ABUT 1 | 107+76.6900 | 44.5000 | 5262.0072 | | 44.5000 | 0.0000 | 44.5000 | 0 00 00.00 | 0.0000 | +0.020000 |
| CL ABUT 1 | 107+78.1900 | 44.5000 | 5262.0258 | 262.0258 | 44.5000 | 1.5000 | 44.5000 | 0 00 00.00 | 1.5000 | +0.020000 |
| F-1 | 107+88.5650 | 44.5000 | 5262.1444 | 262.1658 | 44.5000 | 11.8750 | | | 11.8750 | +0.020000 |
| F-2 | 107+98.9400 | 44.5000 | 5262.2453 | 262.2860 | 44.5000 | 22.2500 | | | 22.2500 | +0.020000 |
| F-3 | 108+09.3150 | 44.5000 | 5262.3286 | 262.3842 | 44.5000 | 32.6250 | | | 32.6250 | +0.020000 |
| F-4 | 108+19.6900 | 44.5000 | 5262.3943 | 262.4589 | 44.5000 | 43.0000 | | | 43.0000 | +0.020000 |
| F-5 | 108+30.0650 | 44.5000 | 5262.4423 | 262.5094 | 44.5000 | 53.3750 | | | 53.3750 | +0.020000 |
| F-6 | 108+40.4400 | 44.5000 | 5262.4727 | 262.5355 | 44.5000 | 63.7500 | | | 63.7500 | +0.020000 |
| F-7 | 108+50.8150 | 44.5000 | 5262.4855 | 262.5378 | 44.5000 | 74.1250 | | | 74.1250 | +0.020000 |
| F-8 | 108+61.1900 | 44.5000 | 5262.4807 | 262.5176 | 44.5000 | 84.5000 | | | 84.5000 | +0.020000 |
| F-9 | 108+71.5650 | 44.5000 | 5262.4582 | 262.4768 | 44.5000 | 94.8750 | | | 94.8750 | +0.020000 |
| BKBRG P2 | 108+81.9400 | 44.5000 | 5262.4181 | 262.4181 | 44.5000 | 105.2500 | 44.5000 | 0 00 00.00 | 105.2500 | +0.020000 |
| CL PIER 2 | 108+83.1900 | 44.5000 | 5262.4121 | | 44.5000 | 106.5000 | 44.5000 | 0 00 00.00 | 106.5000 | +0.020000 |
| AHBRG P2 | 108+84.4400 | 44.5000 | 5262.4058 | 262.4058 | 44.5000 | 107.7500 | 44.5000 | 0 00 00.00 | 107.7500 | +0.020000 |
| F-1 | 108+98.3150 | 44.5000 | 5262.3189 | 262.3868 | 44.5000 | 121.6250 | | | 121.6250 | +0.020000 |
| F-2 | 109+12.1900 | 44.5000 | 5262.2005 | 262.3318 | 44.5000 | 135.5000 | | | 135.5000 | +0.020000 |
| F-3 | 109+26.0650 | 44.5000 | 5262.0505 | 262.2333 | 44.5000 | 149.3750 | | | 149.3750 | +0.020000 |
| F-4 | 109+39.9400 | 44.5000 | 5261.8691 | 262.0857 | 44.5000 | 163.2500 | | | 163.2500 | +0.020000 |
| F-5 | 109+53.8150 | 44.5000 | 5261.6561 | 261.8856 | 44.5000 | 177.1250 | | | 177.1250 | +0.020000 |
| F-6 | 109+67.6900 | 44.5000 | 5261.4115 | 261.6314 | 44.5000 | 191.0000 | | | 191.0000 | +0.020000 |
| F-7 | 109+81.5650 | 44.5000 | 5261.1354 | 261.3240 | 44.5000 | 204.8750 | | | 204.8750 | +0.020000 |
| F-8 | 109+95.4400 | 44.5000 | 5260.8278 | 260.9658 | 44.5000 | 218.7500 | | | 218.7500 | +0.020000 |
| F-9 | 110+09.3150 | 44.5000 | 5260.4887 | 260.5615 | 44.5000 | 232.6250 | | | 232.6250 | +0.020000 |
| CL ABUT 3 | 110+23.1900 | 44.5000 | 5260.1180 | 260.1180 | 44.5000 | 246.5000 | 44.5000 | 0 00 00.00 | 246.5000 | +0.020000 |
| BF ABUT 3 | 110+24.6900 | 44.5000 | 5260.0760 | | 44.5000 | 248.0000 | 44.5000 | 0 00 00.00 | 248.0000 | +0.020000 |
| END APP3 | 110+32.6900 | 44.5000 | 5259.8472 | | 44.5000 | 256.0000 | 44.5000 | 0 00 00.00 | 256.0000 | +0.020000 |

CL GIRDER 17 — PARALLEL TO HORIZONTAL CONTROL — 0.250000 FEET BELOW FINISHED GRADE

| BENT LINE | STATION | OFFSET | ELEVATION | ELEV+DL | X | Y | BENT LNTH | SKEW | GIRDER LNTH | CRS-SLP |
|---|---|---|---|---|---|---|---|---|---|---|
| END APP1 | 107+56.6900 | 51.9200 | 5261.8724 | | 51.9200 | -20.0000 | 51.9200 | 0 00 00.00 | -20.0000 | +0.020000 |
| BF ABUT 1 | 107+76.6900 | 51.9200 | 5262.1556 | | 51.9200 | 0.0000 | 51.9200 | 0 00 00.00 | 0.0000 | +0.020000 |
| CL ABUT 1 | 107+78.1900 | 51.9200 | 5262.1742 | 262.1742 | 51.9200 | 1.5000 | 51.9200 | 0 00 00.00 | 1.5000 | +0.020000 |
| F-1 | 107+88.5650 | 51.9200 | 5262.2928 | 262.3142 | 51.9200 | 11.8750 | | | 11.8750 | +0.020000 |
| F-2 | 107+98.9400 | 51.9200 | 5262.3937 | 262.4344 | 51.9200 | 22.2500 | | | 22.2500 | +0.020000 |
| F-3 | 108+09.3150 | 51.9200 | 5262.4770 | 262.5326 | 51.9200 | 32.6250 | | | 32.6250 | +0.020000 |
| F-4 | 108+19.6900 | 51.9200 | 5262.5427 | 262.6073 | 51.9200 | 43.0000 | | | 43.0000 | +0.020000 |
| F-5 | 108+30.0650 | 51.9200 | 5262.5907 | 262.6578 | 51.9200 | 53.3750 | | | 53.3750 | +0.020000 |
| F-6 | 108+40.4400 | 51.9200 | 5262.6211 | 262.6839 | 51.9200 | 63.7500 | | | 63.7500 | +0.020000 |
| F-7 | 108+50.8150 | 51.9200 | 5262.6339 | 262.6862 | 51.9200 | 74.1250 | | | 74.1250 | +0.020000 |
| F-8 | 108+61.1900 | 51.9200 | 5262.6291 | 262.6660 | 51.9200 | 84.5000 | | | 84.5000 | +0.020000 |
| F-9 | 108+71.5650 | 51.9200 | 5262.6066 | 262.6252 | 51.9200 | 94.8750 | | | 94.8750 | +0.020000 |
| BKBRG P2 | 108+81.9400 | 51.9200 | 5262.5665 | 262.5665 | 51.9200 | 105.2500 | 51.9200 | 0 00 00.00 | 105.2500 | +0.020000 |
| CL PIER 2 | 108+83.1900 | 51.9200 | 5262.5605 | | 51.9200 | 106.5000 | 51.9200 | 0 00 00.00 | 106.5000 | +0.020000 |
| AHBRG P2 | 108+84.4400 | 51.9200 | 5262.5542 | 262.5542 | 51.9200 | 107.7500 | 51.9200 | 0 00 00.00 | 107.7500 | +0.020000 |
| F-1 | 108+98.3150 | 51.9200 | 5262.4673 | 262.5352 | 51.9200 | 121.6250 | | | 121.6250 | +0.020000 |
| F-2 | 109+12.1900 | 51.9200 | 5262.3489 | 262.4802 | 51.9200 | 135.5000 | | | 135.5000 | +0.020000 |
| F-3 | 109+26.0650 | 51.9200 | 5262.1989 | 262.3817 | 51.9200 | 149.3750 | | | 149.3750 | +0.020000 |
| F-4 | 109+39.9400 | 51.9200 | 5262.0175 | 262.2341 | 51.9200 | 163.2500 | | | 163.2500 | +0.020000 |
| F-5 | 109+53.8150 | 51.9200 | 5261.8045 | 262.0340 | 51.9200 | 177.1250 | | | 177.1250 | +0.020000 |
| F-6 | 109+67.6900 | 51.9200 | 5261.5599 | 261.7798 | 51.9200 | 191.0000 | | | 191.0000 | +0.020000 |
| F-7 | 109+81.5650 | 51.9200 | 5261.2838 | 261.4724 | 51.9200 | 204.8750 | | | 204.8750 | +0.020000 |
| F-8 | 109+95.4400 | 51.9200 | 5260.9762 | 261.1142 | 51.9200 | 218.7500 | | | 218.7500 | +0.020000 |
| F-9 | 110+09.3150 | 51.9200 | 5260.6371 | 260.7099 | 51.9200 | 232.6250 | | | 232.6250 | +0.020000 |
| CL ABUT 3 | 110+23.1900 | 51.9200 | 5260.2664 | 260.2664 | 51.9200 | 246.5000 | 51.9200 | 0 00 00.00 | 246.5000 | +0.020000 |
| BF ABUT 3 | 110+24.6900 | 51.9200 | 5260.2244 | | 51.9200 | 248.0000 | 51.9200 | 0 00 00.00 | 248.0000 | +0.020000 |
| END APP3 | 110+32.6900 | 51.9200 | 5259.9956 | | 51.9200 | 256.0000 | 51.9200 | 0 00 00.00 | 256.0000 | +0.020000 |

CL GIRDER 18 — PARALLEL TO HORIZONTAL CONTROL — 0.250000 FEET BELOW FINISHED GRADE

| BENT LINE | STATION | OFFSET | ELEVATION | ELEV+DL | X | Y | BENT LNTH | SKEW | GIRDER LNTH | CRS-SLP |
|---|---|---|---|---|---|---|---|---|---|---|
| END APP1 | 107+56.6900 | 59.3333 | 5262.0207 | | 59.3333 | -20.0000 | 59.3333 | 0 00 00.00 | -20.0000 | +0.020000 |
| BF ABUT 1 | 107+76.6900 | 59.3333 | 5262.3039 | | 59.3333 | 0.0000 | 59.3333 | 0 00 00.00 | 0.0000 | +0.020000 |
| CL ABUT 1 | 107+78.1900 | 59.3333 | 5262.3225 | 262.3225 | 59.3333 | 1.5000 | 59.3333 | 0 00 00.00 | 1.5000 | +0.020000 |
| F-1 | 107+88.5650 | 59.3333 | 5262.4410 | 262.4625 | 59.3333 | 11.8750 | | | 11.8750 | +0.020000 |
| F-2 | 107+98.9400 | 59.3333 | 5262.5420 | 262.5827 | 59.3333 | 22.2500 | | | 22.2500 | +0.020000 |
| F-3 | 108+09.3150 | 59.3333 | 5262.6253 | 262.6809 | 59.3333 | 32.6250 | | | 32.6250 | +0.020000 |
| F-4 | 108+19.6900 | 59.3333 | 5262.6910 | 262.7556 | 59.3333 | 43.0000 | | | 43.0000 | +0.020000 |
| F-5 | 108+30.0650 | 59.3333 | 5262.7390 | 262.8060 | 59.3333 | 53.3750 | | | 53.3750 | +0.020000 |
| F-6 | 108+40.4400 | 59.3333 | 5262.7694 | 262.8321 | 59.3333 | 63.7500 | | | 63.7500 | +0.020000 |
| F-7 | 108+50.8150 | 59.3333 | 5262.7822 | 262.8345 | 59.3333 | 74.1250 | | | 74.1250 | +0.020000 |
| F-8 | 108+61.1900 | 59.3333 | 5262.7773 | 262.8143 | 59.3333 | 84.5000 | | | 84.5000 | +0.020000 |
| F-9 | 108+71.5650 | 59.3333 | 5262.7549 | 262.7735 | 59.3333 | 94.8750 | | | 94.8750 | +0.020000 |
| BKBRG P2 | 108+81.9400 | 59.3333 | 5262.7148 | 262.7148 | 59.3333 | 105.2500 | 59.3333 | 0 00 00.00 | 105.2500 | +0.020000 |
| CL PIER 2 | 108+83.1900 | 59.3333 | 5262.7087 | | 59.3333 | 106.5000 | 59.3333 | 0 00 00.00 | 106.5000 | +0.020000 |
| AHBRG P2 | 108+84.4400 | 59.3333 | 5262.7025 | 262.7025 | 59.3333 | 107.7500 | 59.3333 | 0 00 00.00 | 107.7500 | +0.020000 |
| F-1 | 108+98.3150 | 59.3333 | 5262.6156 | 262.6835 | 59.3333 | 121.6250 | | | 121.6250 | +0.020000 |
| F-2 | 109+12.1900 | 59.3333 | 5262.4972 | 262.6285 | 59.3333 | 135.5000 | | | 135.5000 | +0.020000 |
| F-3 | 109+26.0650 | 59.3333 | 5262.3472 | 262.5300 | 59.3333 | 149.3750 | | | 149.3750 | +0.020000 |
| F-4 | 109+39.9400 | 59.3333 | 5262.1657 | 262.3824 | 59.3333 | 163.2500 | | | 163.2500 | +0.020000 |
| F-5 | 109+53.8150 | 59.3333 | 5261.9527 | 262.1822 | 59.3333 | 177.1250 | | | 177.1250 | +0.020000 |
| F-6 | 109+67.6900 | 59.3333 | 5261.7082 | 261.9281 | 59.3333 | 191.0000 | | | 191.0000 | +0.020000 |
| F-7 | 109+81.5650 | 59.3333 | 5261.4321 | 261.6206 | 59.3333 | 204.8750 | | | 204.8750 | +0.020000 |
| F-8 | 109+95.4400 | 59.3333 | 5261.1245 | 261.2624 | 59.3333 | 218.7500 | | | 218.7500 | +0.020000 |
| F-9 | 110+09.3150 | 59.3333 | 5260.7853 | 260.8582 | 59.3333 | 232.6250 | | | 232.6250 | +0.020000 |
| CL ABUT 3 | 110+23.1900 | 59.3333 | 5260.4147 | 260.4147 | 59.3333 | 246.5000 | 59.3333 | 0 00 00.00 | 246.5000 | +0.020000 |
| BF ABUT 3 | 110+24.6900 | 59.3333 | 5260.3727 | | 59.3333 | 248.0000 | 59.3333 | 0 00 00.00 | 248.0000 | +0.020000 |
| END APP3 | 110+32.6900 | 59.3333 | 5260.1438 | | 59.3333 | 256.0000 | 59.3333 | 0 00 00.00 | 256.0000 | +0.020000 |

Note: Elevations are at top of concrete deck 3 Inches below Finished Grade.

Positive Roadway Cross Slope is Upwards from the Profile Grade Line.

These Stations, Coordinates, Offsets and Lengths define the layout of the structure in a two dimensional horizontal plane. Elevations define the final grade of the finished concrete deck. Fabrication of structural components through the direct use of this information is not intended or advisable.

| Quantities | | |
|---|---|---|
| Quantities By | INITIAL | DATE |
| RO | 06/11 | 06/11 |
| MM/LF | | |

| Detail | | |
|---|---|---|
| Detailed By | INITIAL | DATE |
| SJF | 07/11 | 07/11 |
| MM | | |
| Checked By | | |

| Design | | |
|---|---|---|
| Designed By | INITIAL | DATE |
| MM | 06/11 | 06/11 |
| LF | 05/11 | |
| Checked By | | |

fussneckers 11:58:45 AM B:\0224\16628_Federal_6th\My Project\40-46 deck elevations.dgn

Print Date: 8/1/2011
File Name: 40-46 deck elevations.dgn
Horiz. Scale: None Vert. Scale: As Noted
Staff Bridge Branch - Unit 0224 Unit Leader: AJP

| Sheet Revisions | | |
|---|---|---|
| Date: | Comments | Init. |
| | | |
| | | |
| | | |
| | | |


Colorado Department of Transportation
DOT DEPARTMENT OF TRANSPORTATION
8833 South Wadsworth Court
Littleton, CO 80128
Phone: 303-972-9112 FAX: 303-972-9114
Region 6 TG


As Constructed
No Revisions:
Revised:
Void:

BRIDGE DECK ELEVATIONS

Designer: M. Mohseni
Detailer: S. Fussnecker
Sheet Subset: Bridge
Structure Numbers: F-16-XO
Subset Sheets: B45 of 46

Project No./Code
C 088A-024
16628
Sheet Number

R WALK CURB — PARALLEL TO HORIZONTAL CONTROL — 0.250000 FEET BELOW FINISHED GRADE

| BENT LINE | STATION | OFFSET | ELEVATION | ELEV+DL | X | Y | BENT LNTH | SKEW | GIRDER LNTH | CRS-SLP |
|---|---|---|---|---|---|---|---|---|---|---|
| END APP1 | 107+56.6900 | 60.0000 | 5262.0340 | | 60.0000 | -20.0000 | 60.0000 | 0 00 00.00 | -20.0000 | +0.020000 |
| BF ABUT 1 | 107+76.6900 | 60.0000 | 5262.3172 | | 60.0000 | 0.0000 | 60.0000 | 0 00 00.00 | 0.0000 | +0.020000 |
| CL ABUT 1 | 107+78.1900 | 60.0000 | 5262.3358 | 262.3358 | 60.0000 | 1.5000 | 60.0000 | 0 00 00.00 | 1.5000 | +0.020000 |
| F-1 | 107+88.5650 | 60.0000 | 5262.4544 | 262.4758 | 60.0000 | 11.8750 | | | 11.8750 | +0.020000 |
| F-2 | 107+98.9400 | 60.0000 | 5262.5553 | 262.5960 | 60.0000 | 22.2500 | | | 22.2500 | +0.020000 |
| F-3 | 108+09.3150 | 60.0000 | 5262.6386 | 262.6942 | 60.0000 | 32.6250 | | | 32.6250 | +0.020000 |
| F-4 | 108+19.6900 | 60.0000 | 5262.7043 | 262.7689 | 60.0000 | 43.0000 | | | 43.0000 | +0.020000 |
| F-5 | 108+30.0650 | 60.0000 | 5262.7523 | 262.8194 | 60.0000 | 53.3750 | | | 53.3750 | +0.020000 |
| F-6 | 108+40.4400 | 60.0000 | 5262.7827 | 262.8455 | 60.0000 | 63.7500 | | | 63.7500 | +0.020000 |
| F-7 | 108+50.8150 | 60.0000 | 5262.7955 | 262.8478 | 60.0000 | 74.1250 | | | 74.1250 | +0.020000 |
| F-8 | 108+61.1900 | 60.0000 | 5262.7907 | 262.8276 | 60.0000 | 84.5000 | | | 84.5000 | +0.020000 |
| F-9 | 108+71.5650 | 60.0000 | 5262.7682 | 262.7868 | 60.0000 | 94.8750 | | | 94.8750 | +0.020000 |
| BKBRG P2 | 108+81.9400 | 60.0000 | 5262.7281 | 262.7281 | 60.0000 | 105.2500 | 60.0000 | 0 00 00.00 | 105.2500 | +0.020000 |
| CL PIER 2 | 108+83.1900 | 60.0000 | 5262.7221 | | 60.0000 | 106.5000 | 60.0000 | 0 00 00.00 | 106.5000 | +0.020000 |
| AHBRG P2 | 108+84.4400 | 60.0000 | 5262.7158 | 262.7158 | 60.0000 | 107.7500 | 60.0000 | 0 00 00.00 | 107.7500 | +0.020000 |
| F-1 | 108+98.3150 | 60.0000 | 5262.6289 | 262.6968 | 60.0000 | 121.6250 | | | 121.6250 | +0.020000 |
| F-2 | 109+12.1900 | 60.0000 | 5262.5105 | 262.6418 | 60.0000 | 135.5000 | | | 135.5000 | +0.020000 |
| F-3 | 109+26.0650 | 60.0000 | 5262.3605 | 262.5433 | 60.0000 | 149.3750 | | | 149.3750 | +0.020000 |
| F-4 | 109+39.9400 | 60.0000 | 5262.1791 | 262.3957 | 60.0000 | 163.2500 | | | 163.2500 | +0.020000 |
| F-5 | 109+53.8150 | 60.0000 | 5261.9661 | 262.1956 | 60.0000 | 177.1250 | | | 177.1250 | +0.020000 |
| F-6 | 109+67.6900 | 60.0000 | 5261.7215 | 261.9414 | 60.0000 | 191.0000 | | | 191.0000 | +0.020000 |
| F-7 | 109+81.5650 | 60.0000 | 5261.4454 | 261.6340 | 60.0000 | 204.8750 | | | 204.8750 | +0.020000 |
| F-8 | 109+95.4400 | 60.0000 | 5261.1378 | 261.2758 | 60.0000 | 218.7500 | | | 218.7500 | +0.020000 |
| F-9 | 110+09.3150 | 60.0000 | 5260.7987 | 260.8715 | 60.0000 | 232.6250 | | | 232.6250 | +0.020000 |
| CL ABUT 3 | 110+23.1900 | 60.0000 | 5260.4280 | 260.4280 | 60.0000 | 246.5000 | 60.0000 | 0 00 00.00 | 246.5000 | +0.020000 |
| BF ABUT 3 | 110+24.6900 | 60.0000 | 5260.3860 | | 60.0000 | 248.0000 | 60.0000 | 0 00 00.00 | 248.0000 | +0.020000 |
| END APP3 | 110+32.6900 | 60.0000 | 5260.1572 | | 60.0000 | 256.0000 | 60.0000 | 0 00 00.00 | 256.0000 | +0.020000 |

CL GIRDER 19 — PARALLEL TO HORIZONTAL CONTROL — 0.250000 FEET BELOW FINISHED GRADE

| BENT LINE | STATION | OFFSET | ELEVATION | ELEV+DL | X | Y | BENT LNTH | SKEW | GIRDER LNTH | CRS-SLP |
|---|---|---|---|---|---|---|---|---|---|---|
| END APP1 | 107+56.6900 | 66.7500 | 5262.1690 | | 66.7500 | -20.0000 | 66.7500 | 0 00 00.00 | -20.0000 | +0.020000 |
| BF ABUT 1 | 107+76.6900 | 66.7500 | 5262.4522 | | 66.7500 | 0.0000 | 66.7500 | 0 00 00.00 | 0.0000 | +0.020000 |
| CL ABUT 1 | 107+78.1900 | 66.7500 | 5262.4708 | 262.4708 | 66.7500 | 1.5000 | 66.7500 | 0 00 00.00 | 1.5000 | +0.020000 |
| F-1 | 107+88.5650 | 66.7500 | 5262.5894 | 262.6108 | 66.7500 | 11.8750 | | | 11.8750 | +0.020000 |
| F-2 | 107+98.9400 | 66.7500 | 5262.6903 | 262.7310 | 66.7500 | 22.2500 | | | 22.2500 | +0.020000 |
| F-3 | 108+09.3150 | 66.7500 | 5262.7736 | 262.8292 | 66.7500 | 32.6250 | | | 32.6250 | +0.020000 |
| F-4 | 108+19.6900 | 66.7500 | 5262.8393 | 262.9039 | 66.7500 | 43.0000 | | | 43.0000 | +0.020000 |
| F-5 | 108+30.0650 | 66.7500 | 5262.8873 | 262.9544 | 66.7500 | 53.3750 | | | 53.3750 | +0.020000 |
| F-6 | 108+40.4400 | 66.7500 | 5262.9177 | 262.9805 | 66.7500 | 63.7500 | | | 63.7500 | +0.020000 |
| F-7 | 108+50.8150 | 66.7500 | 5262.9305 | 262.9828 | 66.7500 | 74.1250 | | | 74.1250 | +0.020000 |
| F-8 | 108+61.1900 | 66.7500 | 5262.9257 | 262.9626 | 66.7500 | 84.5000 | | | 84.5000 | +0.020000 |
| F-9 | 108+71.5650 | 66.7500 | 5262.9032 | 262.9218 | 66.7500 | 94.8750 | | | 94.8750 | +0.020000 |
| BKBRG P2 | 108+81.9400 | 66.7500 | 5262.8631 | 262.8631 | 66.7500 | 105.2500 | 66.7500 | 0 00 00.00 | 105.2500 | +0.020000 |
| CL PIER 2 | 108+83.1900 | 66.7500 | 5262.8571 | | 66.7500 | 106.5000 | 66.7500 | 0 00 00.00 | 106.5000 | +0.020000 |
| AHBRG P2 | 108+84.4400 | 66.7500 | 5262.8508 | 262.8508 | 66.7500 | 107.7500 | 66.7500 | 0 00 00.00 | 107.7500 | +0.020000 |
| F-1 | 108+98.3150 | 66.7500 | 5262.7639 | 262.8318 | 66.7500 | 121.6250 | | | 121.6250 | +0.020000 |
| F-2 | 109+12.1900 | 66.7500 | 5262.6455 | 262.7768 | 66.7500 | 135.5000 | | | 135.5000 | +0.020000 |
| F-3 | 109+26.0650 | 66.7500 | 5262.4955 | 262.6783 | 66.7500 | 149.3750 | | | 149.3750 | +0.020000 |
| F-4 | 109+39.9400 | 66.7500 | 5262.3141 | 262.5307 | 66.7500 | 163.2500 | | | 163.2500 | +0.020000 |
| F-5 | 109+53.8150 | 66.7500 | 5262.1011 | 262.3306 | 66.7500 | 177.1250 | | | 177.1250 | +0.020000 |
| F-6 | 109+67.6900 | 66.7500 | 5261.8565 | 262.0764 | 66.7500 | 191.0000 | | | 191.0000 | +0.020000 |
| F-7 | 109+81.5650 | 66.7500 | 5261.5804 | 261.7690 | 66.7500 | 204.8750 | | | 204.8750 | +0.020000 |
| F-8 | 109+95.4400 | 66.7500 | 5261.2728 | 261.4108 | 66.7500 | 218.7500 | | | 218.7500 | +0.020000 |
| F-9 | 110+09.3150 | 66.7500 | 5260.9337 | 261.0065 | 66.7500 | 232.6250 | | | 232.6250 | +0.020000 |
| CL ABUT 3 | 110+23.1900 | 66.7500 | 5260.5630 | 260.5630 | 66.7500 | 246.5000 | 66.7500 | 0 00 00.00 | 246.5000 | +0.020000 |
| BF ABUT 3 | 110+24.6900 | 66.7500 | 5260.5210 | | 66.7500 | 248.0000 | 66.7500 | 0 00 00.00 | 248.0000 | +0.020000 |
| END APP3 | 110+32.6900 | 66.7500 | 5260.2922 | | 66.7500 | 256.0000 | 66.7500 | 0 00 00.00 | 256.0000 | +0.020000 |

R BRDGRAIL — PARALLEL TO HORIZONTAL CONTROL — 0.250000 FEET BELOW FINISHED GRADE

| BENT LINE | STATION | OFFSET | ELEVATION | ELEV+DL | X | Y | BENT LNTH | SKEW | GIRDER LNTH | CRS-SLP |
|---|---|---|---|---|---|---|---|---|---|---|
| END APP1 | 107+56.6900 | 68.5000 | 5262.2040 | | 68.5000 | -20.0000 | 68.5000 | 0 00 00.00 | -20.0000 | +0.020000 |
| BF ABUT 1 | 107+76.6900 | 68.5000 | 5262.4872 | | 68.5000 | 0.0000 | 68.5000 | 0 00 00.00 | 0.0000 | +0.020000 |
| CL ABUT 1 | 107+78.1900 | 68.5000 | 5262.5058 | 262.5058 | 68.5000 | 1.5000 | 68.5000 | 0 00 00.00 | 1.5000 | +0.020000 |
| F-1 | 107+88.5650 | 68.5000 | 5262.6244 | 262.6458 | 68.5000 | 11.8750 | | | 11.8750 | +0.020000 |
| F-2 | 107+98.9400 | 68.5000 | 5262.7253 | 262.7660 | 68.5000 | 22.2500 | | | 22.2500 | +0.020000 |
| F-3 | 108+09.3150 | 68.5000 | 5262.8086 | 262.8642 | 68.5000 | 32.6250 | | | 32.6250 | +0.020000 |
| F-4 | 108+19.6900 | 68.5000 | 5262.8743 | 262.9389 | 68.5000 | 43.0000 | | | 43.0000 | +0.020000 |
| F-5 | 108+30.0650 | 68.5000 | 5262.9223 | 262.9894 | 68.5000 | 53.3750 | | | 53.3750 | +0.020000 |
| F-6 | 108+40.4400 | 68.5000 | 5262.9527 | 263.0155 | 68.5000 | 63.7500 | | | 63.7500 | +0.020000 |
| F-7 | 108+50.8150 | 68.5000 | 5262.9655 | 263.0178 | 68.5000 | 74.1250 | | | 74.1250 | +0.020000 |
| F-8 | 108+61.1900 | 68.5000 | 5262.9607 | 262.9976 | 68.5000 | 84.5000 | | | 84.5000 | +0.020000 |
| F-9 | 108+71.5650 | 68.5000 | 5262.9382 | 262.9568 | 68.5000 | 94.8750 | | | 94.8750 | +0.020000 |
| BKBRG P2 | 108+81.9400 | 68.5000 | 5262.8981 | 262.8981 | 68.5000 | 105.2500 | 68.5000 | 0 00 00.00 | 105.2500 | +0.020000 |
| CL PIER 2 | 108+83.1900 | 68.5000 | 5262.8921 | | 68.5000 | 106.5000 | 68.5000 | 0 00 00.00 | 106.5000 | +0.020000 |
| AHBRG P2 | 108+84.4400 | 68.5000 | 5262.8858 | 262.8858 | 68.5000 | 107.7500 | 68.5000 | 0 00 00.00 | 107.7500 | +0.020000 |
| F-1 | 108+98.3150 | 68.5000 | 5262.7989 | 262.8668 | 68.5000 | 121.6250 | | | 121.6250 | +0.020000 |
| F-2 | 109+12.1900 | 68.5000 | 5262.6805 | 262.8118 | 68.5000 | 135.5000 | | | 135.5000 | +0.020000 |
| F-3 | 109+26.0650 | 68.5000 | 5262.5305 | 262.7133 | 68.5000 | 149.3750 | | | 149.3750 | +0.020000 |
| F-4 | 109+39.9400 | 68.5000 | 5262.3491 | 262.5657 | 68.5000 | 163.2500 | | | 163.2500 | +0.020000 |
| F-5 | 109+53.8150 | 68.5000 | 5262.1361 | 262.3656 | 68.5000 | 177.1250 | | | 177.1250 | +0.020000 |
| F-6 | 109+67.6900 | 68.5000 | 5261.8915 | 262.1114 | 68.5000 | 191.0000 | | | 191.0000 | +0.020000 |
| F-7 | 109+81.5650 | 68.5000 | 5261.6154 | 261.8040 | 68.5000 | 204.8750 | | | 204.8750 | +0.020000 |
| F-8 | 109+95.4400 | 68.5000 | 5261.3078 | 261.4458 | 68.5000 | 218.7500 | | | 218.7500 | +0.020000 |
| F-9 | 110+09.3150 | 68.5000 | 5260.9687 | 261.0415 | 68.5000 | 232.6250 | | | 232.6250 | +0.020000 |
| CL ABUT 3 | 110+23.1900 | 68.5000 | 5260.5980 | 260.5980 | 68.5000 | 246.5000 | 68.5000 | 0 00 00.00 | 246.5000 | +0.020000 |
| BF ABUT 3 | 110+24.6900 | 68.5000 | 5260.5560 | | 68.5000 | 248.0000 | 68.5000 | 0 00 00.00 | 248.0000 | +0.020000 |
| END APP3 | 110+32.6900 | 68.5000 | 5260.3272 | | 68.5000 | 256.0000 | 68.5000 | 0 00 00.00 | 256.0000 | +0.020000 |

R EDGE DECK — PARALLEL TO HORIZONTAL CONTROL — 0.250000 FEET BELOW FINISHED GRADE

| BENT LINE | STATION | OFFSET | ELEVATION | ELEV+DL | X | Y | BENT LNTH | SKEW | GIRDER LNTH | CRS-SLP |
|---|---|---|---|---|---|---|---|---|---|---|
| END APP1 | 107+56.6900 | 70.0000 | 5262.2340 | | 70.0000 | -20.0000 | 70.0000 | 0 00 00.00 | -20.0000 | +0.020000 |
| END WWA1 | 107+58.1900 | 70.0000 | 5262.2575 | | 70.0000 | -18.5000 | 70.0000 | 0 00 00.00 | -18.5000 | +0.020000 |
| BF ABUT 1 | 107+76.6900 | 70.0000 | 5262.5172 | | 70.0000 | 0.0000 | 70.0000 | 0 00 00.00 | 0.0000 | +0.020000 |
| CL ABUT 1 | 107+78.1900 | 70.0000 | 5262.5358 | 262.5358 | 70.0000 | 1.5000 | 70.0000 | 0 00 00.00 | 1.5000 | +0.020000 |
| F-1 | 107+88.5650 | 70.0000 | 5262.6544 | 262.6758 | 70.0000 | 11.8750 | | | 11.8750 | +0.020000 |
| F-2 | 107+98.9400 | 70.0000 | 5262.7553 | 262.7960 | 70.0000 | 22.2500 | | | 22.2500 | +0.020000 |
| F-3 | 108+09.3150 | 70.0000 | 5262.8386 | 262.8942 | 70.0000 | 32.6250 | | | 32.6250 | +0.020000 |
| F-4 | 108+19.6900 | 70.0000 | 5262.9043 | 262.9689 | 70.0000 | 43.0000 | | | 43.0000 | +0.020000 |
| F-5 | 108+30.0650 | 70.0000 | 5262.9523 | 263.0194 | 70.0000 | 53.3750 | | | 53.3750 | +0.020000 |
| F-6 | 108+40.4400 | 70.0000 | 5262.9827 | 263.0455 | 70.0000 | 63.7500 | | | 63.7500 | +0.020000 |
| F-7 | 108+50.8150 | 70.0000 | 5262.9955 | 263.0478 | 70.0000 | 74.1250 | | | 74.1250 | +0.020000 |
| F-8 | 108+61.1900 | 70.0000 | 5262.9907 | 263.0276 | 70.0000 | 84.5000 | | | 84.5000 | +0.020000 |
| F-9 | 108+71.5650 | 70.0000 | 5262.9682 | 262.9868 | 70.0000 | 94.8750 | | | 94.8750 | +0.020000 |
| BKBRG P2 | 108+81.9400 | 70.0000 | 5262.9281 | 262.9281 | 70.0000 | 105.2500 | 70.0000 | 0 00 00.00 | 105.2500 | +0.020000 |
| CL PIER 2 | 108+83.1900 | 70.0000 | 5262.9221 | | 70.0000 | 106.5000 | 70.0000 | 0 00 00.00 | 106.5000 | +0.020000 |
| AHBRG P2 | 108+84.4400 | 70.0000 | 5262.9158 | 262.9158 | 70.0000 | 107.7500 | 70.0000 | 0 00 00.00 | 107.7500 | +0.020000 |
| F-1 | 108+98.3150 | 70.0000 | 5262.8289 | 262.8968 | 70.0000 | 121.6250 | | | 121.6250 | +0.020000 |
| F-2 | 109+12.1900 | 70.0000 | 5262.7105 | 262.8418 | 70.0000 | 135.5000 | | | 135.5000 | +0.020000 |
| F-3 | 109+26.0650 | 70.0000 | 5262.5605 | 262.7433 | 70.0000 | 149.3750 | | | 149.3750 | +0.020000 |
| F-4 | 109+39.9400 | 70.0000 | 5262.3791 | 262.5957 | 70.0000 | 163.2500 | | | 163.2500 | +0.020000 |
| F-5 | 109+53.8150 | 70.0000 | 5262.1661 | 262.3956 | 70.0000 | 177.1250 | | | 177.1250 | +0.020000 |
| F-6 | 109+67.6900 | 70.0000 | 5261.9215 | 262.1414 | 70.0000 | 191.0000 | | | 191.0000 | +0.020000 |
| F-7 | 109+81.5650 | 70.0000 | 5261.6454 | 261.8340 | 70.0000 | 204.8750 | | | 204.8750 | +0.020000 |
| F-8 | 109+95.4400 | 70.0000 | 5261.3378 | 261.4758 | 70.0000 | 218.7500 | | | 218.7500 | +0.020000 |
| F-9 | 110+09.3150 | 70.0000 | 5260.9987 | 261.0715 | 70.0000 | 232.6250 | | | 232.6250 | +0.020000 |
| CL ABUT 3 | 110+23.1900 | 70.0000 | 5260.6280 | 260.6280 | 70.0000 | 246.5000 | 70.0000 | 0 00 00.00 | 246.5000 | +0.020000 |
| BF ABUT 3 | 110+24.6900 | 70.0000 | 5260.5860 | | 70.0000 | 248.0000 | 70.0000 | 0 00 00.00 | 248.0000 | +0.020000 |
| END APP3 | 110+32.6900 | 70.0000 | 5260.3572 | | 70.0000 | 256.0000 | 70.0000 | 0 00 00.00 | 256.0000 | +0.020000 |

| Design | INITIAL | DATE | Detail | INITIAL | DATE | Quantities | INITIAL | DATE |
|---|---|---|---|---|---|---|---|---|
| Designed By | MM | 06/11 | Detailed By | SJF | 07/11 | Quantities By | RO | 06/11 |
| Checked By | LF | 05/11 | Checked By | MM | 07/11 | Checked By | MM/LF | 06/11 |

Note: Elevations are at top of concrete deck 3 Inches below Finished Grade.

Positive Roadway Cross Slope is Upwards from the Profile Grade Line.

These Stations, Coordinates, Offsets and Lengths define the layout of the structure in a two dimensional horizontal plane. Elevations define the final grade of the finished concrete deck. Fabrication of structural components through the direct use of this information is not intended or advisable.

Print Date: 8/1/2011
File Name: 40-46 deck elevations.dgn
Horiz. Scale: None Vert. Scale: As Noted
Staff Bridge Branch - Unit 0224 Unit Leader: AJP

Sheet Revisions

| Date: | Comments | Init. |
|---|---|---|
| | | |
| | | |
| | | |
| | | |

Colorado Department of Transportation
8833 South Wadsworth Court
Littleton, CO 80128
Phone: 303-972-9112 FAX: 303-972-9114
Region 6 TG

As Constructed
No Revisions:
Revised:
Void:

BRIDGE DECK ELEVATIONS

Designer: M. Mohseni
Detailer: S. Fussnecker
Sheet Subset: Bridge
Structure Numbers: F-16-XO
Subset Sheets: B46 of 46

Project No./Code
C 088A-024
16628
Sheet Number

fussneckers 11:58:48 AM B:\0224\16628_Federal_6th\My Project\40-46 deck elevations.dgn